NEW LONGVIEW TOWNHOMES
PUBLIC STORM SEWER PLAN

SECTION 10, TOWNSHIP 47 N, RANGE 32 W
IN LEE'S SUMMIT, JACKSON COUNTY, MO

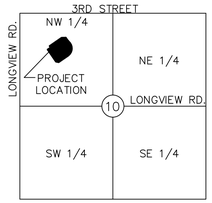

LOCATION MAP
Sec. 10, Twp. 47 N., Rge. 32 W.
(N.T.S.)

PROJECT TEAM & UTILITY CONTACT LIST	
OWNER / DEVELOPER BOX REAL ESTATE DEVELOPMENT 3152 SW GRANDSTAND CR. LEES SUMMIT, MO 64081 CONTACT: RUSSELL PEARSON PHONE: 913.735.9861 EMAIL: RPEARSON@BOXDEVCO.COM	UTILITY SERVICE NUMBERS NAME: LEE'S SUMMIT PUBLIC WORKS PHONE: 816–969–1800 NAME: LEE'S SUMMIT WATER UTILITIES DEPARTMENT PHONE: 816–969–1900 NAME: SPIRE (MGE) PHONE: 314–342–0500 NAME: AT&T PHONE: 800–286–8313 NAME: EVERGY PHONE: 816–471–5275 NAME: SPECTRUM (TWC) PHONE: 877–772–2253 NAME: GOOGLE FIBER PHONE: 877–454–6959
ENGINEER OLSSON 1301 BURLINGTON, SUITE 100 NORTH KANSAS CITY, MO 64116 CONTACT: JULIE E. SELLERS, P.E. PHONE: 816.361.1177 EMAIL: JSELLERS@OLSSON.COM	
SURVEYOR OLSSON 1301 BURLINGTON, SUITE 100 NORTH KANSAS CITY, MO 64116 CONTACT: JASON ROUDEBUSH PHONE: 816.587.4320 EMAIL: JROUDEBUSH@OLSSON.COM	

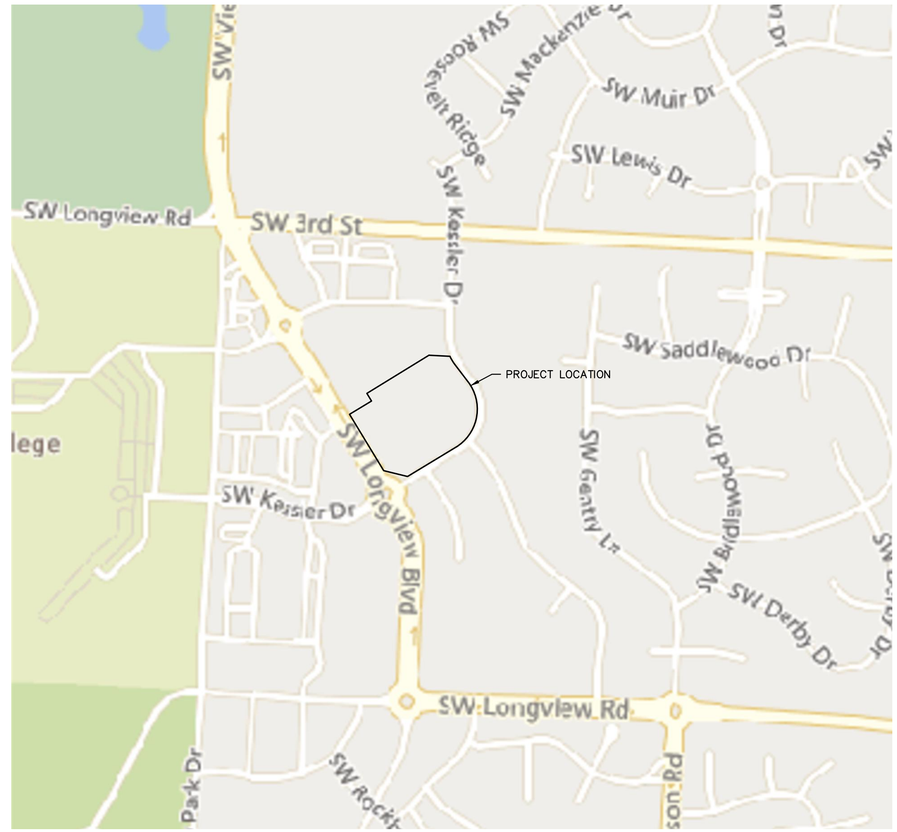

VICINITY MAP
1"=400'

Sheet List Table

Sheet Number	Sheet Title
C200	COVER SHEET
C201	GENERAL NOTES
C202	GENERAL LAYOUT
C203	STORM SEWER DEMOLITION PLAN
C204	STORM SEWER LINE 1 PLAN & PROFILE
C205	STORM SEWER LINE 1 PLAN & PROFILE
C206	DRAINAGE MAP
C207	DRAINAGE TABLES
C208	STORM SEWER DETAILS
C209	STORM SEWER DETAILS

JULIE E SELLERS, P.E.
CIVIL ENGINEER
MO# 2017000367

7/28/21
DATE

PROPERTY DESCRIPTION:

LOT 2, MINOR PLAT OF FASCINATION AT NEW LONGVIEW, LOTS 1 & 2, A SUBDIVISION IN LEE'S SUMMIT, JACKSON COUNTY, MISSOURI. CONTAINING 6.76 ACRES MORE OR LESS.

BENCHMARK

THE STATION IS A KC METRO DISK SET IN CONCRETE AND FLUSH WITH THE GROUND. THE STATION IS TAMPED JA–147, 2000. STATION JA–148

NOTE:

1. FEMA FIRM MAP NUMBER 29095C0412G SHOWS THE ENTIRE SITE IS LOCATED WITHIN ZONE X, "AREAS DETERMINED TO BE OUTSIDE THE 0.2% ANNUAL CHANCE FLOODPLAIN."
2. NO OIL OR GAS WELLS OR UNDERMINED AREAS ARE PRESENT ON THE SITE.

PL2021237
PRSUBD20215636

Kent Monter
I am approving
this document
2022.08.27
13:15:49-05'00'

Kent Monter

RELEASED FOR CONSTRUCTION
As Noted on Plans Review
Development Services Department
Lee's Summit, Missouri
08/27/2022

CALL BEFORE YOU DIG
1-800-DIG-RITE
MISSOURI ONE CALL SYSTEM

olsson

Olsson - Civil Engineering
Missouri Certificate of Authority # 001592
1301 Burlington Street
North Kansas City, MO 64116
TEL 816.361.1177
www.olsson.com

STATE OF MISSOURI
JULIE ELAINE SELLERS
NUMBER PE-2017000367
7/28/21
PROFESSIONAL ENGINEER

REV. NO.	DATE	REVISIONS DESCRIPTION	BY

REVISIONS

COVER SHEET
PUBLIC STORM SEWER PLAN

NEW LONGVIEW TOWNHOMES
451 SW LONGVIEW BLVD

LEE'S SUMMIT, MO

2021

drawn by:	QL/CM
checked by:	JES
approved by:	JES
QA/QC by:	JES
project no.:	021-02987
drawing no.:	C_TTL01_02102987
date:	06.16.2021

SHEET
C200

DWG: F:\2021\02501-03000\021-02987\40-Design\AutoCAD\Final Plans\Sheets\GNCV\PUBLIC STORM SEWER PLANS\C_TTL01_02102987.dwg USER: qlowrey
DATE: Jul 28, 2021 11:21am XREFS: C_PTTBLK_02102987

GENERAL NOTES:

1. THE CONSTRUCTION COVERED BY THESE PLANS SHALL CONFORM TO THE LEE'S SUMMIT, MISSOURI DESIGN AND CONSTRUCTION MANUAL AS ADOPTED BY ORDINANCE 5813. WHERE DISCREPANCIES EXIST BETWEEN THESE PLANS AND THE DESIGN AND CONSTRUCTION MANUAL, THE DESIGN AND CONSTRUCTION MANUAL SHALL PREVAIL.

2. ALL MANHOLES, CATCH BASINS, UTILITY VALVES, AND METER PITS TO BE ADJUSTED OR REBUILT TO GRADE AS REQUIRED.

3. ALL SIGNS (I.E. STREET NAME AND STOP SIGNS) SHALL BE INSTALLED IN ACCORDANCE WITH THE STANDARDS AND SPECIFICATIONS OF THE CITY OF LEE'S SUMMIT, DESIGN AND CONSTRUCTION MANUAL, PRIOR TO SUBSTANTIAL COMPLETION.

4. THE ASPHALTIC CONCRETE SURFACES ON ALL PERMITTED STREETS SHALL BE VIRGIN MATERIAL.

5. IT SHALL BE THE RESPONSIBILITY OF THE CONTRACTOR TO CONTROL DOWNSTREAM EROSION AND SILTATION DURING ALL PHASES OF CONSTRUCTION. EROSION CONTROL PLANS AND PROCEDURES SHALL BE IN PLACE PRIOR TO ANY EXCAVATION.

6. THE CONTRACTOR SHALL BE RESPONSIBLE FOR RECORDING ROCK ELEVATIONS AT 25 FOOT (MAXIMUM) INTERVALS WHERE ENCOUNTERED, AND FURNISHING THIS INFORMATION TO THE DESIGN ENGINEER FOR USE ON "AS-BUILT" PLANS.

7. THE LOCATIONS OF EXISTING UTILITIES AS SHOWN ARE APPROXIMATE. IT SHALL BE THE RESPONSIBILITY OF THE CONTRACTOR TO VERIFY THE LOCATIONS OF ALL EXISTING UTILITIES.

8. NO SUBSURFACE EXPLORATION FOR THE DETERMINATION OF AND/OR THE LOCATION OF EXISTING ROCK HAS BEEN MADE.

9. CONTRACTOR SHALL PROVIDE EARTHWORK AND MATERIAL TESTING TO COMPLY WITH THE STANDARD SPECIFICATIONS OF THE PUBLIC WORKS DEPARTMENT OR AS REQUIRED BY THE CITY'S FIELD REPRESENTATIVE.

10. CONTRACTOR MUST CONTACT DEVELOPMENT SERVICES INSPECTIONS AT 816-969-1200 48 HOURS PRIOR TO ANY CONSTRUCTION ACTIVITIES.

11. P.O.S= PROPOSED OPEN SPACE.

LEGEND	
ECTVOH	EXISTING CABLE TV, OVERHEAD
ECTV	EXISTING CABLE TV, UNDERGROUND
CTVOH	PROPOSED CABLE TV, OVERHEAD
CTV	PROPOSED CABLE TV, UNDERGROUND
FCTVOH	FUTURE CABLE TV, OVERHEAD
FCTV	FUTURE CABLE TV, UNDERGROUND
EFOOH	EXISTING FIBER OPTIC, OVERHEAD
EFO	EXISTING FIBER OPTIC, UNDERGROUND
FOOH	PROPOSED FIBER OPTIC, OVERHEAD
FO	PROPOSED FIBER OPTIC, UNDERGROUND
FFOOH	FUTURE FIBER OPTIC, OVERHEAD
FFO	FUTURE FIBER OPTIC, UNDERGROUND
EFP	EXISTING FIRE PROTECTION SYSTEM LINE
FP	PROPOSED FIRE PROTECTION SYSTEM LINE
FFP	FUTURE FIRE PROTECTION SYSTEM LINE
EFL	EXISTING FUEL LINE
FL	PROPOSED FUEL LINE
FFL	FUTURE FUEL LINE
EG	EXISTING NATURAL GAS LINE
G	PROPOSED NATURAL GAS LINE
FG	FUTURE NATURAL GAS LINE
ETELOH	EXISTING TELEPHONE LINE, OVERHEAD
ETEL	EXISTING TELEPHONE LINE, UNDERGROUND
TELOH	PROPOSED TELEPHONE LINE, OVERHEAD
TEL	PROPOSED TELEPHONE LINE, UNDERGROUND
FTELOH	FUTURE TELEPHONE LINE, OVERHEAD
FTEL	FUTURE TELEPHONE LINE, UNDERGROUND
EEOH	EXISTING POWER\ELECTRIC LINE, OVERHEAD
EE	EXISTING POWER\ELECTRIC LINE, UNDERGROUND
EOH	PROPOSED POWER\ELECTRIC LINE, OVERHEAD
E	PROPOSED POWER\ELECTRIC LINE, UNDERGROUND
FEOH	FUTURE POWER\ELECTRIC LINE, OVERHEAD
FE	FUTURE POWER\ELECTRIC LINE, UNDERGROUND
SS	EXISTING SANITARY SEWER
SS	PROPOSED SANITARY SEWER
FSS	FUTURE SANITARY SEWER
ESL	EXISTING STEAM LINE
SL	PROPOSED STEAM LINE
FSL	FUTURE STEAM LINE
	EXISTING STORM SEWER
	PROPOSED STORM SEWER
FST	FUTURE STORM SEWER
W	EXISTING WATER LINE
W	PROPOSED WATER LINE
FW	FUTURE WATER LINE

Control Point Information				
Point Number	Elevation	North	Easting	Description
CP #102	988.71	999264.487	2804343.208	At intersection of SW. Fascination Dr. and SW Kessler Dr. go south along SW. Kessler Dr. to where curb jogs right (west) up against sidewalk.
CP#100	988.67	999658.163	2803977.829	At intersection of SW Fascination Drive and SW Kessler Drive go west along SW Fascination Drive to west side of parking stalls on south side of street.
CP #26	1010.42	999510.913	2803459.510	In south east quadrant of roundabout located at intersection of S.W. Fascination Dr. and Longview Parkway. West 1' to east edge of sidewalk. Southwest to corner of side walk where side walk ends but will be connected to at a later date.
CP#101	1003.96	999030.752	2803749.080	At intersection of Longview Parkway and SW Fascination Drive go south to second entrance on east signe of Longview Parkway.

ESTIMATE OF QUANTITIES

ITEM NO.	DESCRIPTION	UNIT	QUANTITY	AS-BUILT
	STORM			
	STD. CURB INLET (5'x5' INSIDE)	EA.	5	
	STD. GRATE INLET (5'x5' INSIDE)	EA.	1	
	STD. MANHOLE (5' DIA INSIDE)	EA.	1	
	STD. MANHOLE (6' DIA INSIDE)	EA.	2	
	STD. MANHOLE (7' DIA INSIDE)	EA.	1	
	30" HDPE	L.F.	312.90	
	36" HDPE	L.F.	498.52	
	30" PIPE REMOVAL	L.F.	230	
	36" PIPE REMOVAL	L.F.	140	
	42" PIPE REMOVAL	L.F.	20	
	CONNECTION TO EXISTING STRUCTURE	EA.	1	
	REMOVAL OF STRUCTURE	EA.	3	

SUMMARY OF QUANTITIES AS INDICATED ABOVE AND ANY QUANTITIES AS SHOWN WITHIN THE PLANS HAVE BEEN PROVIDED FOR PERMITTING PURPOSES ONLY AND ARE NOT INTENDED FOR USE IN PREPARATION OF CONTRACT DOCUMENTS. QUANTITIES INTENDED FOR, BUT NOT LIMITED TO, THE PREPARATION OF PROPOSALS AND BID DOCUMENTS SHALL BE INDEPENDENTLY EVALUATED BY THE ESTIMATING PARTY BASED UPON THE CONTENTS OF THESE PLANS.

RELEASED FOR CONSTRUCTION
As Noted on Plans Review

Development Services Department
Lee's Summit, Missouri
08/27/2022

olsson

Olsson - Civil Engineering
Missouri Corporation of Authority # 001592
1301 Burlington Street
North Kansas City, MO 64116

TEL 816.361.1177
www.olsson.com

STATE OF MISSOURI
JULIE ELAINE SELLERS
NUMBER PE-2017000367
7/28/21
PROFESSIONAL ENGINEER

REV. NO.	DATE	REVISIONS DESCRIPTION	BY

REVISIONS

GENERAL NOTES
PUBLIC STORM SEWER PLAN

NEW LONGVIEW TOWNHOMES
451 SW LONGVIEW BLVD

LEE'S SUMMIT, MO

2021

drawn by: QL/CM
checked by: JES
approved by: JES
QA/QC by: JES
project no.: 021-02987
drawing no.: C_TTL01_02102987
date: 06.16.2021

SHEET
C201

DWG: F:\2021\02501-03000\021-02987\40-Design\AutoCAD\Final Plans\Sheets\GNCV\PUBLIC STORM SEWER PLANS\C_TTL01_02102987.dwg USER: qlowrey
DATE: Jul 28, 2021 11:21am XREFS: C_PTTBLK_02102987

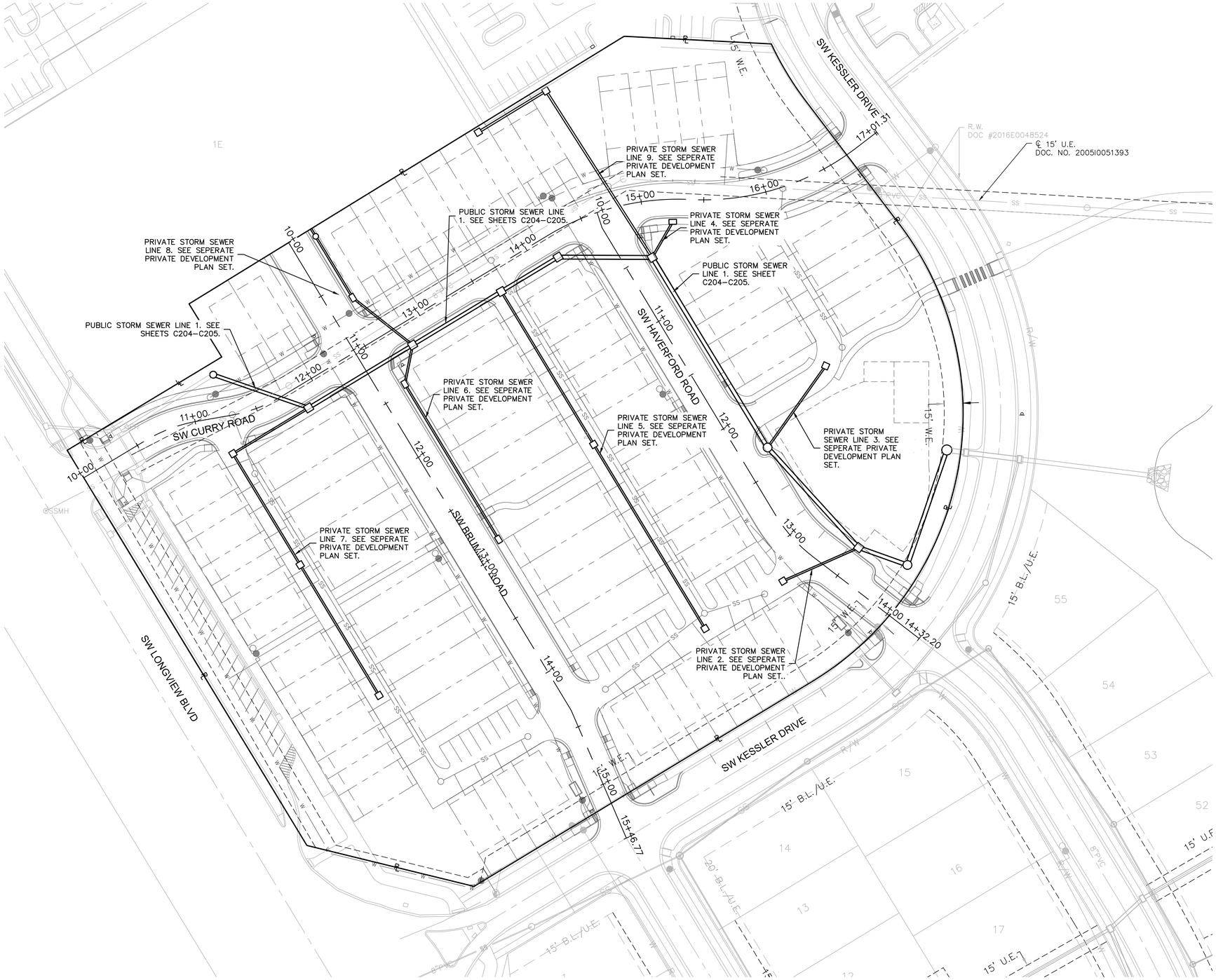

RELEASED FOR CONSTRUCTION
As Noted on Plans Review

Development Services Department
Lee's Summit, Missouri
08/27/2022

N

0' 20' 40' 80'
SCALE IN FEET

olsson

Olsson - Civil Engineering
Missouri Corporate Authority # 001592
1301 Burlington Street
North Kansas City, MO 64116
TEL 816.361.1177
www.olsson.com

STATE OF MISSOURI
JULIE ELAINE SELLERS
NUMBER PE-2017000367
7/28/21
PROFESSIONAL ENGINEER

REV. NO.	DATE	REVISIONS DESCRIPTION	BY

REVISIONS

GENERAL LAYOUT
PUBLIC STORM SEWER PLAN

NEW LONGVIEW TOWNHOMES
451 SW LONGVIEW BLVD

LEE'S SUMMIT, MO

2021

drawn by:	QL/CM
checked by:	JES
approved by:	JES
QA/QC by:	JES
project no.:	021-02987
drawing no.:	
date:	06.16.2021

SHEET
C202

DWG: F:\2021\02501-03000\021-02987\40-Design\AutoCAD\Final Plans\Sheets\GNCV\PUBLIC STORM SEWER PLANS\C_GEN01_02102987.dwg USER: qlowrey
DATE: Jul 28, 2021 11:22am XREFS: C_PBASE_02102987 C_PTTIBLK_02102987 C_PUTIL_02102987 C_XBASE_02102987 C_PBNDY_02102987

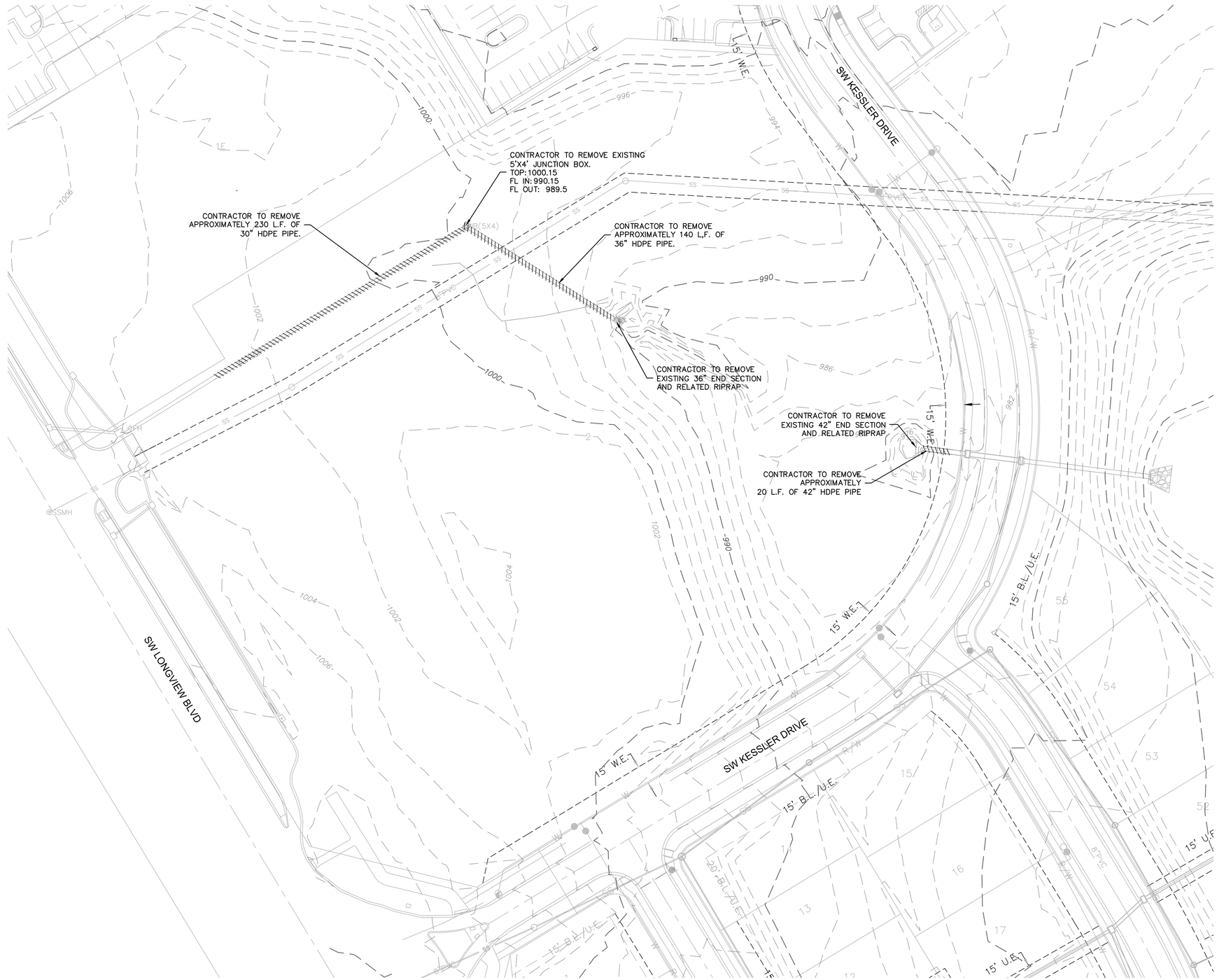

RELEASED FOR CONSTRUCTION
As Noted on Plans Review

Development Services Department
Lee's Summit, Missouri
08/27/2022

0' 20' 40' 80'
SCALE IN FEET

N

DWG: F:\2021\02501-03000\021-02987\40-Design\AutoCAD\Final Plans\Sheets\GNCV\PUBLIC STORM SEWER PLANS\C_DEM01_02102987.dwg USER: qlowrey
DATE: Jul 28, 2021 11:22am XREFS: C_PBASE_02102987 C_PTTBLK_02102987 C_PUTIL_02102987 C_XBASE_02102987 C_PBNDY_02102987

olsson

Olsson - Civil Engineering
Missouri Certificate of Authority # 001592
1301 Burlington Street
North Kansas City, MO 64116
TEL 816.361.1177
www.olsson.com

STATE OF MISSOURI
JULIE ELAINE SELLERS
NUMBER PE-2017000367
7/28/21
PROFESSIONAL ENGINEER

REV. NO.	DATE	REVISIONS DESCRIPTION	BY

REVISIONS

STORM SEWER DEMOLITION PLAN
PUBLIC STORM SEWER PLAN

NEW LONGVIEW TOWNHOMES
451 SW LONGVIEW BLVD

LEE'S SUMMIT, MO

2021

drawn by:	QL/CM
checked by:	JES
approved by:	JES
QA/QC by:	JES
project no.:	021-02987
drawing no.:	
date:	06.16.2021

SHEET
C203

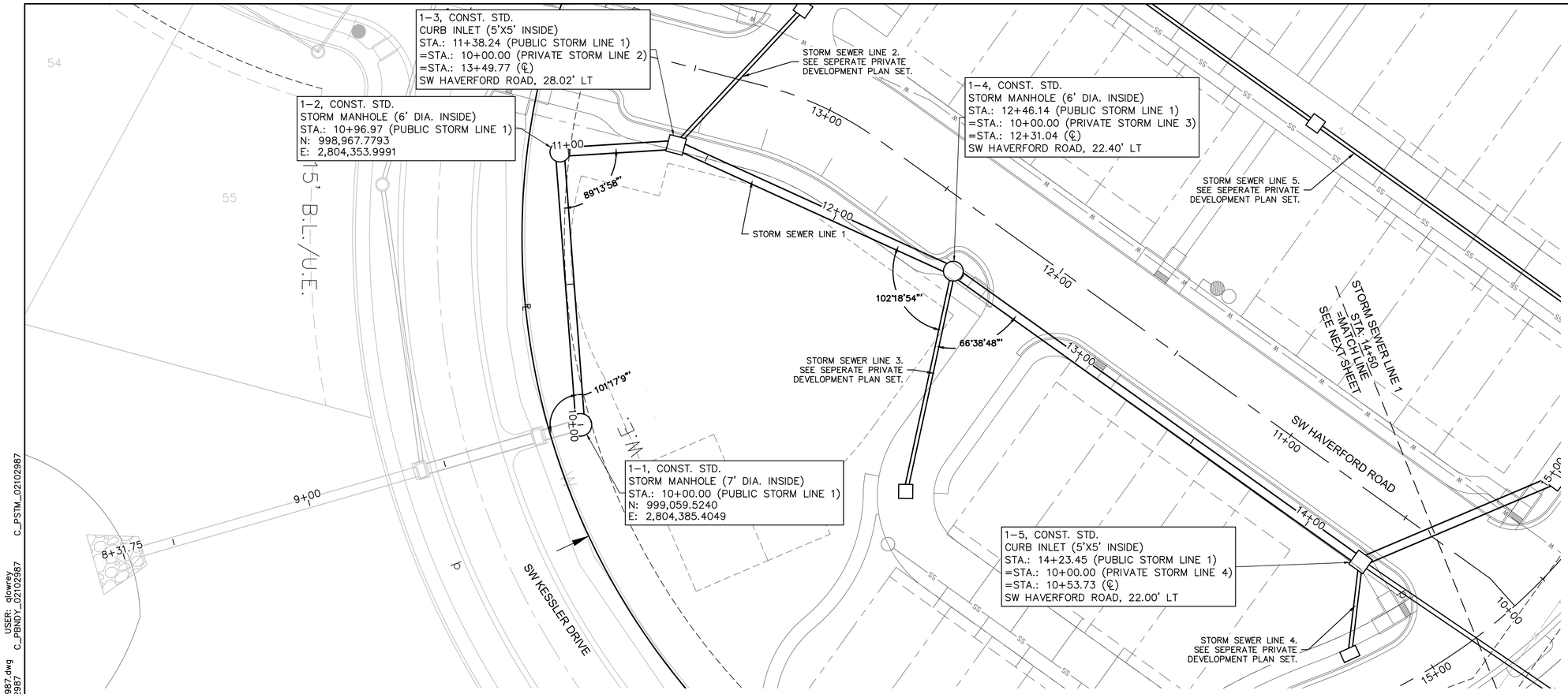

RELEASED FOR CONSTRUCTION
As Noted on Plans Review
Development Services Department
Lee's Summit, Missouri
08/27/2022

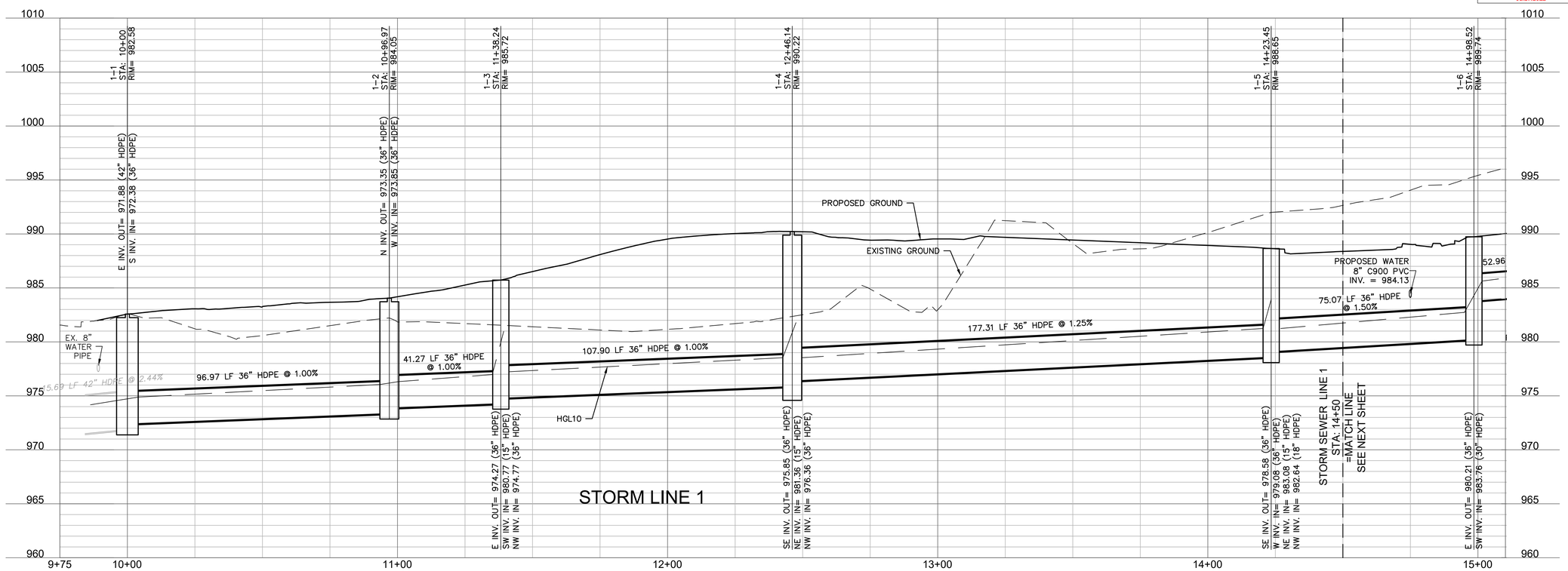

olsson
Olsson - Civil Engineering
Missouri Certificate of Authority # 001592
1301 Burlington Street
North Kansas City, MO 64116
TEL 816.361.1177
www.olsson.com

STATE OF MISSOURI
JULIE ELAINE SELLERS
NUMBER PE-2017000367
7/28/21
PROFESSIONAL ENGINEER

REV. NO.	DATE	REVISIONS DESCRIPTION	BY

REVISIONS

STORM SEWER LINE 1 PLAN & PROFILE
PUBLIC STORM SEWER PLAN

NEW LONGVIEW TOWNHOMES
451 SW LONGVIEW BLVD

LEE'S SUMMIT, MO

2021

drawn by:	QL/CM
checked by:	JES
approved by:	JES
QA/QC by:	JES
project no.:	021-02987
drawing no.:	
date:	06.16.2021

SHEET
C204

DWG: F:\2021\02501-03000\021-02987\40-Design\AutoCAD\Final Plans\Sheets\GNCY\PUBLIC STORM SEWER PLANS\C_STM01_02102987.dwg USER: qlowrey C_PSTM_02102987
DATE: Jul 28, 2021 11:23am XREFS: C_PBASE_02102987 C_PTTBLK_02102987 C_PUTIL_02102987 C_XBASE_02102987 C_PBNDY_02102987

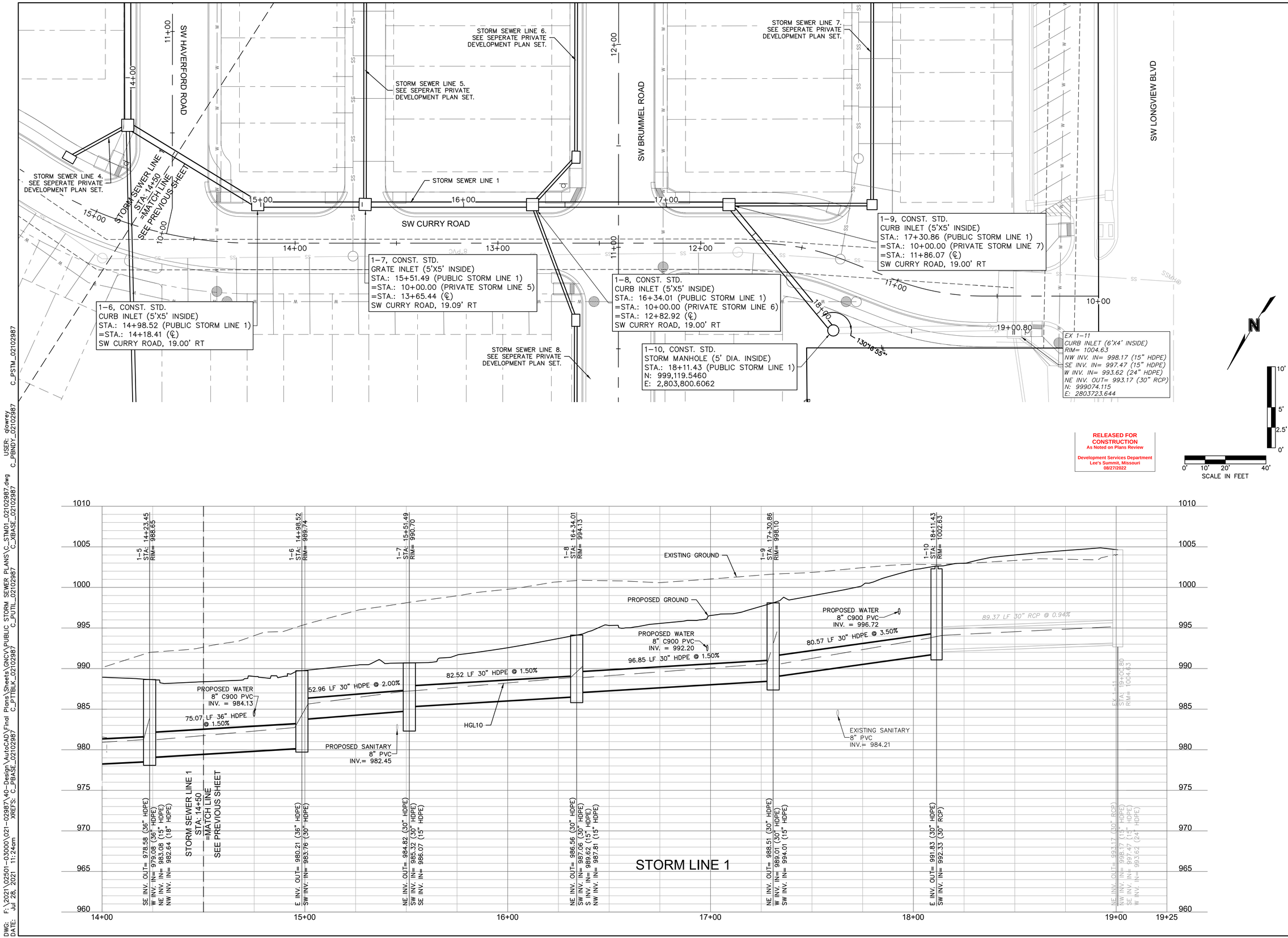

RELEASED FOR CONSTRUCTION
As Noted on Plans Review
Development Services Department
Lee's Summit, Missouri
08/27/2022

olsson
Olsson - Civil Engineering
Missouri Corporate Authority # 001592
1301 Burlington Street
North Kansas City, MO 64116
TEL 816.361.1177
www.olsson.com

STATE OF MISSOURI
JULIE ELAINE SELLERS
NUMBER PE-2017000367
7/28/21
PROFESSIONAL ENGINEER

REV. NO.	DATE	REVISIONS DESCRIPTION	BY

REVISIONS

STORM SEWER LINE 1 PLAN & PROFILE
PUBLIC STORM SEWER PLAN

NEW LONGVIEW TOWNHOMES
451 SW LONGVIEW BLVD

LEE'S SUMMIT, MO

2021

drawn by:	QJ/CM
checked by:	JES
approved by:	JES
QA/QC by:	JES
project no.:	021-02987
drawing no.:	
date:	06.16.2021

SHEET
C205

DWG: F:\2021\02501-03000\021-02987\40-Design\AutoCAD\Final Plans\Sheets\GNCV\PUBLIC STORM SEWER PLANS\C_STM01_02102987.dwg
DATE: Jul 28, 2021 11:24am XREFS: C_PBASE_02102987 C_PTTBLK_02102987 C_PUTIL_02102987 C_XBASE_02102987 C_PBNDY_02102987 C_PSTM_02102987 USER: qlowrey

NOTE:
DRAINAGE AREAS HAVE BEEN DETERMINED BASED ON ANTICIPATED HOUSE ELEVATIONS, SLIGHT MODIFICATIONS ARE ACCEPTABLE PENDING STORM SEWER INLETS HAVE CAPACITY.

RELEASED FOR CONSTRUCTION
As Noted on Plans Review

Development Services Department
Lee's Summit, Missouri
08/27/2022

olsson

Olsson - Civil Engineering
Missouri Corporate Authority # 001592
1301 Burlington Street
North Kansas City, MO 64116
TEL 816.361.1177
www.olsson.com

STATE OF MISSOURI
JULIE ELAINE SELLERS
NUMBER PE-2017000367
7/28/21
PROFESSIONAL ENGINEER

REV. NO.	DATE	REVISIONS DESCRIPTION	BY

REVISIONS

DRAINAGE MAP

NEW LONGVIEW TOWNHOMES
451 SW LONGVIEW BLVD

LEE'S SUMMIT, MO

2021

drawn by:	QL/CM
checked by:	JES
approved by:	JES
QA/QC by:	JES
project no.:	021-02987
drawing no.:	
date:	06.16.2021

SHEET
C206

DWG: F:\2021\02501-03000\021-02987\40-Design\AutoCAD\Final Plans\Sheets\GNCV\PUBLIC STORM SEWER PLANS\C_DRN01_02102987.dwg USER: qlowrey
DATE: Jul 28, 2021 11:25am XREFS: C_PBASE_02102987 C_PTTBLK_02102987 C_PUTIL_02102987 C_XBASE_02102987 C_PBNDY_02102987 C_PSTM_02102987

Storm Sewer Design Calculation Table
10 Year Return Frequency

Upstream Structure	Downstream Structure	Length (ft)	Upstream Invert (ft)	Downstream Invert (ft)	Slope (%)	Diameter (in)	Manning's n	Total Flow (cfs)	Velocity (ft/s)	Capacity (cfs)	Flow Depth (ft)	Upstream Struct. HGL (ft)	Upstream Top Elev. (ft)
1-1	EX A-3	15.69	971.88	971.50	2.44	42	0.012	73.29	9.30	170.33	2.67	974.56	982.50
1-2	1-1	96.97	973.35	972.38	1.00	36	0.012	73.29	11.30	72.26	2.50	976.05	984.59
1-3	1-2	41.27	974.27	973.85	1.02	36	0.012	73.29	11.35	72.89	2.47	976.97	987.63
1-4	1-3	107.90	975.85	974.77	1.00	36	0.012	72.24	11.24	72.28	2.46	978.53	990.45
1-5	1-4	177.31	978.58	976.36	1.25	36	0.012	70.14	11.69	80.85	2.17	981.24	988.64
1-6	1-5	75.07	980.21	979.08	1.51	36	0.012	61.06	10.43	88.65	2.16	982.73	989.74
1-7	1-6	52.96	984.82	983.76	2.00	30	0.012	56.99	13.17	62.86	1.87	987.19	990.95
1-8	1-7	82.52	986.56	985.32	1.50	30	0.012	52.21	11.80	54.46	1.96	988.88	994.57
1-9	1-8	96.85	988.51	987.06	1.50	30	0.012	38.01	9.30	54.36	1.82	990.59	998.31
1-10	1-9	80.57	991.83	989.01	3.50	30	0.012	33.64	9.19	83.12	1.58	993.80	1002.63
EX 1-11	1-10	89.37	993.17	992.33	0.94	30	0.013	33.64	8.59	39.76	1.76	995.14	1004.65
2-1	1-3	66.02	982.09	980.77	2.00	15	0.012	0.55	3.45	9.89	0.20	982.38	990.08
3-1	1-4	79.87	982.56	981.36	1.50	15	0.012	2.10	4.78	8.57	0.42	983.14	987.01
4-1	1-5	32.80	983.61	983.08	1.62	15	0.012	7.04	7.19	8.89	0.84	984.67	987.93
5-1	1-7	142.50	988.00	986.07	1.35	15	0.012	2.81	3.30	8.14	1.12	988.67 j	993.18
5-2	5-1	171.68	990.44	988.30	1.25	15	0.012	0.88	2.89	7.81	0.37	990.81 j	994.69
6-1	1-8	31.69	990.25	989.62	1.99	15	0.012	4.87	6.60	9.86	0.62	991.14	996.34
6-2	6-1	144.72	993.64	990.75	2.00	15	0.012	2.64	5.45	9.89	0.44	994.29	998.13
7-1	1-9	70.53	995.07	994.01	1.50	15	0.012	3.36	5.51	8.58	0.54	995.81	1001.60
7-2	7-1	103.68	997.13	995.57	1.50	15	0.012	2.15	4.81	8.58	0.43	997.71	1002.64
7-3	7-2	121.57	999.45	997.63	1.50	15	0.012	0.77	3.57	8.56	0.25	999.79	1003.86
8-1	1-8	64.11	988.86	987.81	1.64	15	0.012	6.92	6.22	8.95	1.07	989.91 j	997.31
8-2	8-1	57.14	992.22	989.36	5.01	15	0.012	3.63	5.75	15.65	0.55	992.99	998.65
EX A-2	EX A-1	110.06	967.18	959.93	6.59	42	0.012	85.62	17.82	279.74	1.33	970.06	981.94
EX A-3	EX A-2	42.50	971.38	969.72	3.91	42	0.012	79.67	15.20	215.41	1.47	974.17	981.86
EX B-1	EX A-2	102.23	973.40	971.69	1.67	15	0.012	4.00	5.95	9.05	0.58	974.21	983.13
EX B-2	EX B-1	112.97	975.51	973.90	1.43	15	0.012	4.00	5.75	8.35	0.61	976.32	984.99
EX B-3	EX B-2	42.33	979.05	978.33	1.70	15	0.012	3.18	5.56	9.12	0.51	979.77	985.07

Inlet Design Table
10 Year Return Frequency

Inlet ID	Inlet Location	Peak Flow (cfs)	Upstream Bypass (cfs)	Total Flow (cfs)	Clogging Factor	Inlet Capacity (cfs)	Sag Inlet Capacity (Note 1) (cfs)	Captured Flow (cfs)	Bypass Flow (cfs)	Inlet Efficiency (Note 2) (%)	Gutter Depth (ft)	Gutter Spread (ft)	Ponding Depth (ft)
1-3	GRADE	0.50	0.00	0.50	1.00	0.50	0.50	0.50	0.00	99.89%	0.08	3.54	...
1-5	GRADE	2.10	0.00	2.10	1.00	2.04	2.04	2.04	0.05	97.41%	0.18	8.37	...
1-6	GRADE	1.27	4.22	5.48	1.00	4.07	4.07	4.07	1.42	74.17%	0.22	10.04	...
1-7	GRADE	4.53	1.65	6.19	1.00	1.97	1.97	1.97	4.22	31.85%	...	...	0.14
1-8	GRADE	2.81	0.13	2.94	1.00	2.41	2.41	2.41	0.53	81.84%	0.15	7.10	...
1-9	GRADE	1.05	0.00	1.05	1.00	1.01	1.01	1.01	0.03	96.76%	0.10	4.82	...
EX 1-11	SAG	33.64	0.00	33.64	...	...	...	33.64	0.00	100.00%	...	...	...
2-1	GRADE	0.55	0.00	0.55	1.00	1.97	1.97	0.55	0.00	100.00%	...	...	0.14
3-1	SAG	2.10	0.00	2.10	0.80	19.26	15.41	2.10	0.00	100.00%	...	...	0.14
4-1(L)	SAG	0.72	0.00	0.72	0.80	19.40	15.52	0.72	0.00	100.00%	0.00	0.00	...
4-1(R)	SAG	0.55	1.47	2.02	0.80	19.40	15.52	2.02	0.00	100.00%	0.16	7.19	...
4-1(B)	SAG	4.30	0.00	4.30	0.80	19.40	15.52	4.30	0.00	100.00%	0.00	0.00	...
4-1	SAG	5.57	1.47	7.04	0.80	19.40	15.52	7.04	0.00	100.00%	...	...	...
5-1	GRADE	1.93	0.00	1.93	1.00	1.97	1.97	1.93	0.00	100.00%	...	...	0.14
5-2	GRADE	0.88	0.00	0.88	1.00	1.97	1.97	0.88	0.00	100.00%	...	...	0.14
6-1	GRADE	2.15	0.17	2.32	1.00	2.23	2.23	2.23	0.10	95.82%	0.18	8.41	...
6-2	GRADE	2.81	0.00	2.81	1.00	2.64	2.64	2.64	0.17	93.84%	0.20	9.03	...
7-1	GRADE	1.21	0.00	1.21	1.00	1.97	1.97	1.21	0.00	100.00%	...	...	0.14
7-2	GRADE	1.38	0.00	1.38	1.00	1.97	1.97	1.38	0.00	100.00%	...	...	0.14
7-3	GRADE	0.77	0.00	0.77	1.00	1.97	1.97	0.77	0.00	100.00%	...	...	0.14
8-1	GRADE	4.41	0.00	4.41	1.00	3.29	3.29	3.29	1.12	74.58%	0.19	8.57	...
FT AREA 8-2	SAG	3.63	0.00	3.63	...	...	...	3.63	0.00	100.00%	0.00	0.00	...
EX A-2(L)	SAG	1.13	0.00	1.13	0.80	19.40	15.52	1.13	0.00	100.00%	0.13	6.14	...
EX A-2(R)	SAG	0.34	0.00	0.34	0.80	19.40	15.52	0.34	0.00	100.00%	0.00	0.00	...
EX A-2(B)	SAG	0.49	0.00	0.49	0.80	19.40	15.52	0.49	0.00	100.00%	...	...	...
EX A-2	SAG	1.95	0.00	1.95	0.80	19.40	15.52	1.95	0.00	100.00%	...	...	...
EX A-3(L)	SAG	1.50	0.61	2.11	0.80	19.40	15.52	2.11	0.00	100.00%	0.00	0.00	...
EX A-3(R)	SAG	1.99	0.00	1.99	0.80	19.40	15.52	1.99	0.00	100.00%	0.16	7.61	...
EX A-3(B)	SAG	2.28	0.00	2.28	0.80	19.40	15.52	2.28	0.00	100.00%	...	...	...
EX A-3	SAG	5.78	0.61	6.38	0.80	19.40	15.52	6.38	0.00	100.00%	...	...	...
EX B-2	GRADE	0.83	0.00	0.83	1.00	0.82	0.82	0.82	0.00	99.93%	0.12	5.75	...
EX B-3	GRADE	3.79	0.00	3.79	1.00	3.18	3.18	3.18	0.61	83.92%	0.19	8.90	...

Notes:
1. Inlet capacity at sag location has been reduced by a clogging factor of 0.80, reducing theoretical capacity to 80% capacity, as required per APWA Section 5600.
Both theoretical capacity and reduced capacity are shown.
2. Inlet efficiency shown in the tables is Captured Flow/Total Flow, denoting the actual percentage of flow captured after the capacity has been reduced to 80% of theoretical capacity.

Drainage Area Design Table
10 Year Return Frequency

Inlet ID	Drainage Area (ac)	C	Tc (min)	i (in/hr)	K	Peak Flow (cfs)
1-3	0.09	0.75	5.00	7.35	1.00	0.50
1-5	0.38	0.75	5.00	7.35	1.00	2.10
1-6	0.23	0.75	5.00	7.35	1.00	1.27
1-7	0.79	0.78	5.00	7.35	1.00	4.53
1-8	0.49	0.78	5.00	7.35	1.00	2.81
1-9	0.19	0.75	5.00	7.35	1.00	1.05
EX 1-11	6.58	0.81	6.67	6.93	1.00	33.64
2-1	0.10	0.75	5.00	7.35	1.00	0.55
3-1	0.38	0.75	5.00	7.35	1.00	2.10
4-1(L)	0.13	0.75	5.00	7.35	1.00	0.72
4-1(R)	0.10	0.75	5.00	7.35	1.00	0.55
4-1(B)	0.78	0.75	5.00	7.35	1.00	4.30
4-1	1.01	0.75	5.00	7.35	1.00	5.57
5-1	0.35	0.75	5.00	7.35	1.00	1.93
5-2	0.16	0.75	5.00	7.35	1.00	0.88
6-1	0.39	0.75	5.00	7.35	1.00	2.15
6-2	0.51	0.75	5.00	7.35	1.00	2.81
7-1	0.22	0.75	5.00	7.35	1.00	1.21
7-2	0.25	0.75	5.00	7.35	1.00	1.38
7-3	0.14	0.75	5.00	7.35	1.00	0.77
8-1	0.74	0.81	5.00	7.35	1.00	4.41
8-2	0.61	0.81	5.00	7.35	1.00	3.63
EX A-2(L)	0.30	0.51	5.00	7.35	1.00	1.13
EX A-2(R)	0.09	0.51	5.00	7.35	1.00	0.34
EX A-2(B)	0.13	0.51	5.00	7.35	1.00	0.49
EX A-2	0.52	0.51	5.00	7.35	1.00	1.95
EX A-3(L)	0.31	0.66	5.00	7.35	1.00	1.50
EX A-3(R)	0.41	0.66	5.00	7.35	1.00	1.99
EX A-3(B)	0.47	0.66	5.00	7.35	1.00	2.28
EX A-3	1.19	0.66	5.00	7.35	1.00	5.78
EX B-2	0.22	0.51	5.00	7.35	1.00	0.83
EX B-3	0.78	0.66	5.00	7.35	1.00	3.79

Storm Sewer Design Calculation Table
100 Year Return Frequency

Upstream Structure	Downstream Structure	Length (ft)	Upstream Invert (ft)	Downstream Invert (ft)	Slope (%)	Diameter (in)	Manning's n	Total Flow (cfs)	Velocity (ft/s)	Capacity (cfs)	Flow Depth (ft)	Upstream Struct. HGL (ft)	Upstream Top Elev. (ft)
1-1	EX A-3	15.69	971.88	971.5	2.44	42	0.012	127.99	13.7	170.33	3.23	975.18	982.5
1-2	1-1	96.97	973.35	972.38	1.00	36	0.012	127.99	18.11	72.26	3	978.43	984.59
1-3	1-2	41.27	974.27	973.85	1.02	36	0.012	127.99	18.11	72.89	3	981.76	987.63
1-4	1-3	107.90	975.85	974.77	1.00	36	0.012	126.17	17.85	72.28	3	987.09	990.45
1-5	1-4	177.31	978.58	976.36	1.25	36	0.012	119.5	16.91	80.85	3	993.93	988.64
1-6	1-5	75.07	980.21	979.08	1.51	36	0.012	100.61	14.23	88.65	3	997.16	989.74
1-7	1-6	52.96	984.82	983.76	2.00	30	0.012	94.12	19.18	62.86	2.5	1000.8	990.95
1-8	1-7	82.52	986.56	985.32	1.50	30	0.012	88.63	18.06	54.46	2.5	1006.38	994.57
1-9	1-8	96.85	988.51	987.06	1.50	30	0.012	66	13.45	54.36	2.5	1010.54	998.31
1-10	1-9	80.57	991.83	989.01	3.50	30	0.012	58.62	11.94	83.12	2.5	1013.07	1002.63
EX 1-11	1-10	89.37	993.17	992.33	0.94	30	0.013	58.62	11.94	39.76	2.5	1015.78	1004.65
2-1	1-3	66.02	982.09	980.77	2.00	15	0.012	0.97	0.79	9.89	1.25	983.81	990.08
3-1	1-4	79.87	982.56	981.36	1.50	15	0.012	6.67	5.44	8.57	1.25	989.8	987.01
4-1	1-5	32.80	983.61	983.08	1.62	15	0.012	15.52	12.65	8.89	1.25	997.32	987.93
5-1	1-7	142.50	988	986.07	1.35	15	0.012	3.52	2.87	8.14	1.25	1003.45	993.18
5-2	5-1	171.68	990.44	988.3	1.25	15	0.012	1.55	1.26	7.81	1.25	1003.59	994.69
6-1	1-8	31.69	990.25	989.62	1.99	15	0.012	8.12	6.62	9.86	1.25	1008.83	996.34
6-2	6-1	144.72	993.64	990.75	2.00	15	0.012	4.21	3.43	9.89	1.25	1009.63	998.13
7-1	1-9	70.53	995.07	994.01	1.50	15	0.012	5.29	4.31	8.58	1.25	1012.07	1001.6
7-2	7-1	103.68	997.13	995.57	1.50	15	0.012	3.32	2.71	8.58	1.25	1012.42	1002.64
7-3	7-2	121.57	999.45	997.63	1.50	15	0.012	1.35	1.1	8.56	1.25	1012.51	1003.86
8-1	1-8	64.11	988.86	987.81	1.64	15	0.012	10.77	8.78	8.95	1.25	1009.92	997.31
8-2	8-1	57.14	992.22	989.36	5.01	15	0.012	6.3	5.13	15.65	1.25	1010.87	998.65
EX A-2	EX A-1	110.06	967.18	959.93	6.59	42	0.012	149.63	22.63	279.74	1.82	970.57	981.94
EX A-3	EX A-2	42.50	971.38	969.72	3.91	42	0.012	140.11	19.3	215.41	2.06	974.73	981.86
EX B-1	EX A-2	102.23	973.4	971.69	1.67	15	0.012	6.1	6.86	9.05	0.75	974.4	983.13
EX B-2	EX B-1	112.97	975.51	973.9	1.43	15	0.012	6.1	6.62	8.35	0.79	976.51	984.99
EX B-3	EX B-2	42.33	979.05	978.33	1.70	15	0.012	4.67	6.28	9.12	0.63	979.93	985.07

Inlet Design Table
100 Year Return Frequency

Inlet ID	Inlet Location	Peak Flow (cfs)	Upstream Bypass (cfs)	Total Flow (cfs)	Clogging Factor	Inlet Capacity (cfs)	Sag Inlet Capacity (Note 1) (cfs)	Captured Flow (cfs)	Bypass Flow (cfs)	Inlet Efficiency (Note 2) (%)	Gutter Depth (ft)	Gutter Spread (ft)	Ponding Depth (ft)
1-3	GRADE	0.87	0.00	0.87	1.00	0.85	0.85	0.85	0.02	97.59%	0.09	4.37	...
1-5	GRADE	3.68	0.00	3.68	1.00	3.37	3.37	3.37	0.31	91.61%	0.22	10.34	...
1-6	GRADE	2.23	12.70	14.92	1.00	6.49	6.49	6.49	8.44	43.47%	0.32	14.61	...
1-7	GRADE	7.95	6.72	14.67	1.00	1.97	1.97	1.97	12.70	13.43%	...	...	0.14
1-8	GRADE	4.93	0.94	5.87	1.00	3.74	3.74	3.74	2.13	63.68%	0.20	9.20	...
1-9	GRADE	1.84	0.61	2.45	1.00	2.09	2.09	2.09	0.35	85.56%	0.14	6.62	...
EX 1-11	SAG	58.62	0.00	58.62	...	...	...	58.62	0.00	100.00%	...	...	...
2-1	GRADE	0.97	0.00	0.97	1.00	1.97	1.97	0.97	0.00	100.00%	...	...	0.14
3-1	SAG	3.68	3.00	6.67	0.80	19.26	15.41	6.67	0.00	100.00%	...	...	0.14
4-1(L)	SAG	1.26	0.00	1.26	0.80	19.40	15.52	1.26	0.00	100.00%	0.00	0.00	...
4-1(R)	SAG	0.97	8.74	9.71	0.80	19.40	15.52	9.71	0.00	100.00%	0.28	12.94	...
4-1(B)	SAG	7.55	0.00	7.55	0.80	19.40	15.52	7.55	0.00	100.00%	0.00	0.00	...
4-1	SAG	9.77	8.74	18.52	0.80	19.40	15.52	15.52	3.00	83.81%	...	...	...
5-1	GRADE	3.39	0.00	3.39	1.00	1.97	1.97	1.97	1.42	58.16%	...	...	0.14
5-2	GRADE	1.55	0.00	1.55	1.00	1.97	1.97	1.55	0.00	100.00%	...	...	0.14
6-1	GRADE	3.77	0.73	4.50	1.00	3.91	3.91	3.91	0.58	87.00%	0.23	10.77	...
6-2	GRADE	4.94	0.00	4.94	1.00	4.21	4.21	4.21	0.73	85.30%	0.24	11.15	...
7-1	GRADE	2.13	0.45	2.58	1.00	1.97	1.97	1.97	0.61	76.40%	...	...	0.14
7-2	GRADE	2.42	0.00	2.42	1.00	1.97	1.97	1.97	0.45	81.43%	...	...	0.14
7-3	GRADE	1.35	0.00	1.35	1.00	1.97	1.97	1.35	0.00	100.00%	...	...	0.14
8-1	GRADE	7.64	0.00	7.64	1.00	4.47	4.47	4.47	3.17	58.54%	0.23	10.53	...
FT AREA 8-2	SAG	6.30	0.00	6.30	...	...	...	6.30	0.00	100.00%	0.00	0.00	...
EX A-2(L)	SAG	1.97	0.00	1.97	0.80	19.40	15.52	1.97	0.00	100.00%	0.16	7.59	...
EX A-2(R)	SAG	0.59	0.00	0.59	0.80	19.40	15.52	0.59	0.00	100.00%	0.00	0.00	...
EX A-2(B)	SAG	0.86	0.00	0.86	0.80	19.40	15.52	0.86	0.00	100.00%	...	...	...
EX A-2	SAG	3.42	0.00	3.42	0.80	19.40	15.52	3.42	0.00	100.00%	...	...	...
EX A-3(L)	SAG	2.64	1.99	4.63	0.80	19.40	15.52	4.63	0.00	100.00%	0.00	0.00	...
EX A-3(R)	SAG	3.49	0.00	3.49	0.80	19.40	15.52	3.49	0.00	100.00%	0.20	9.39	...
EX A-3(B)	SAG	4.00	0.00	4.00	0.80	19.40	15.52	4.00	0.00	100.00%	...	...	...
EX A-3	SAG	10.13	1.99	12.12	0.80	19.40	15.52	12.12	0.00	100.00%	...	...	...
EX B-2	GRADE	1.45	0.00	1.45	1.00	1.43	1.43	1.43	0.01	99.10%	0.15	7.10	...
EX B-3	GRADE	6.64	0.00	6.64	1.00	4.67	4.67	4.67	1.97	70.35%	0.24	10.99	...

Notes:
1. Inlet capacity at sag location has been reduced by a clogging factor of 0.80, reducing theoretical capacity to 80% capacity, as required per APWA Section 5600.
Both theoretical capacity and reduced capacity are shown.
2. Inlet efficiency shown in the tables is Captured Flow/Total Flow, denoting the actual percentage of flow captured after the capacity has been reduced to 80% of theoretical capacity.

Drainage Area Design Table
100 Year Return Frequency

Inlet ID	Drainage Area (ac)	C	Tc (min)	i (in/hr)	K	Peak Flow (cfs)
1-3	0.09	0.75	5.00	10.32	1.25	0.87
1-5	0.38	0.75	5.00	10.32	1.25	3.68
1-6	0.23	0.75	5.00	10.32	1.25	2.23
1-7	0.79	0.78	5.00	10.32	1.25	7.95
1-8	0.49	0.78	5.00	10.32	1.25	4.93
1-9	0.19	0.75	5.00	10.32	1.25	1.84
EX 1-11	6.58	0.81	6.67	9.75	1.25	58.62
2-1	0.10	0.75	5.00	10.32	1.25	0.97
3-1	0.38	0.75	5.00	10.32	1.25	3.68
4-1(L)	0.13	0.75	5.00	10.32	1.25	1.26
4-1(R)	0.10	0.75	5.00	10.32	1.25	0.97
4-1(B)	0.78	0.75	5.00	10.32	1.25	7.55
4-1	1.01	0.75	5.00	10.32	1.25	9.77
5-1	0.35	0.75	5.00	10.32	1.25	3.39
5-2	0.16	0.75	5.00	10.32	1.25	1.55
6-1	0.39	0.75	5.00	10.32	1.25	3.77
6-2	0.51	0.75	5.00	10.32	1.25	4.94
7-1	0.22	0.75	5.00	10.32	1.25	2.13
7-2	0.25	0.75	5.00	10.32	1.25	2.42
7-3	0.14	0.75	5.00	10.32	1.25	1.35
8-1	0.74	0.81	5.00	10.32	1.25	7.64
8-2	0.61	0.81	5.00	10.32	1.25	6.30
EX A-2(L)	0.30	0.51	5.00	10.32	1.25	1.97
EX A-2(R)	0.09	0.51	5.00	10.32	1.25	0.59
EX A-2(B)	0.13	0.51	5.00	10.32	1.25	0.86
EX A-2	0.52	0.51	5.00	10.32	1.25	3.42
EX A-3(L)	0.31	0.66	5.00	10.32	1.25	2.64
EX A-3(R)	0.41	0.66	5.00	10.32	1.25	3.49
EX A-3(B)	0.47	0.66	5.00	10.32	1.25	4.00
EX A-3	1.19	0.66	5.00	10.32	1.25	10.13
EX B-2	0.22	0.51	5.00	10.32	1.25	1.45
EX B-3	0.78	0.66	5.00	10.32	1.25	6.64

RELEASED FOR CONSTRUCTION
As Noted on Plans Review
Development Services Department
Lee's Summit, Missouri
08/27/2022

olsson
Olsson - Civil Engineering
Missouri Certificate of Authority # 001592
1301 Burlington Street, Suite 100
North Kansas City, MO 64116
TEL 816.361.1177
www.olsson.com

STATE OF MISSOURI
JULIE ELAINE SELLERS
NUMBER PE-2017000367
7/28/21
PROFESSIONAL ENGINEER

REV. NO.	DATE	REVISIONS DESCRIPTION	BY

REVISIONS

DRAINAGE TABLES

NEW LONGVIEW TOWNHOMES
451 SW LONGVIEW BLVD
LEE'S SUMMIT, MO
2021

drawn by: QL/CM
checked by: JES
approved by: JES
QA/QC by: JES
project no.: 021-02987
drawing no.:
date: 06.16.2021

SHEET
C207

DWG: F:\2021\02501-03000\021-02987\40-Design\AutoCAD\Final Plans\Sheets\GNCV\PUBLIC STORM SEWER PLANS\C_DRN01_02102987.dwg USER: qlowrey
DATE: Jul 28, 2021 11:25am XREFS: C_PBASE_02102987 C_PTBLK_02102987 C_PUTIL_02102987 C_XBASE_02102987 C_PBNDY_02102987 C_PSTM_02102987

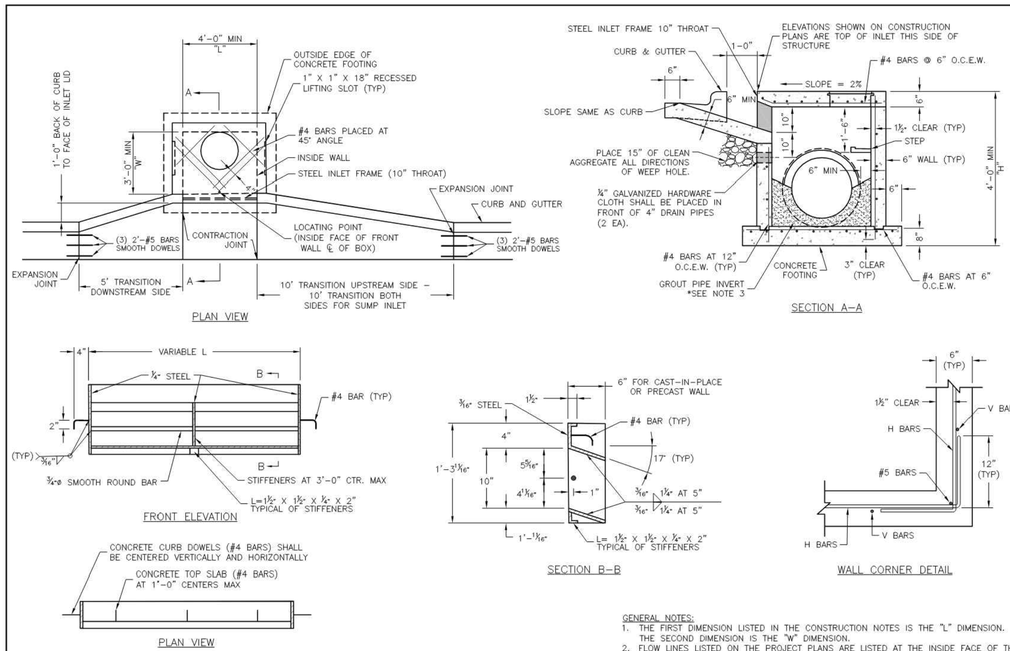

STEEL FRAME NOTES:
1. ALL WELDS SHALL BE PERFORMED IN ACCORDANCE WITH APPROPRIATE AWS SPECIFICATIONS AND PROCEDURES.
2. ALL WELDS ON EXPOSED SURFACES SHALL BE DRESSED SO AS TO PROVIDE A PLEASING FINISHED APPEARANCE.
3. THE ENTIRE FRAME SHALL BE PAINTED A SINGLE COAT OF CHEM–PRIME #37H–78 PRIMER (GRAY) OR EQUAL.

GENERAL NOTES:
1. THE FIRST DIMENSION LISTED IN THE CONSTRUCTION NOTES IS THE "L" DIMENSION. THE SECOND DIMENSION IS THE "W" DIMENSION.
2. FLOW LINES LISTED ON THE PROJECT PLANS ARE LISTED AT THE INSIDE FACE OF THE WALL.
3. FLOOR OF INLET GROUTED AND SHAPED TO MATCH PIPE INVERT TO PROVIDE SMOOTH FLOW.
4. LOCATE MH RING AND COVER ON BLANK WALL IF POSSIBLE.
5. STEPS SHALL BE SPACED AT 1'–4" O.C. VERTICALLY ON BLANK WALL IF POSSIBLE.
6. BEVEL ALL EXPOSED EDGES WITH ¾"CHAMFER OR ½" TOOLED EDGE.
7. ON–GRADE INLETS SHALL CONFORM TO THE STREET GRADE AND SUMP INLETS SHALL BE LEVEL.
8. PRECAST LIDS SHALL BE PINNED, SEALED WITH NON–SHRINKABLE GROUT AND REMOVABLE FOR FUTURE MAINTENANCE.
9. LIFTING RINGS SHALL BE REMOVED AND SEALED WITH NON–SHRINKABLE GROUT
10. FOR RING AND COVER SEE THE STORMWATER APPROVED PRODUCT LIST.

LEE'S SUMMIT MISSOURI
PUBLIC WORKS ENGINEERING DIVISION | 220 SE GREEN STREET | LEE'S SUMMIT, MO 64063

STANDARD DETAILS
CITY OF LEE'S SUMMIT, MO
LEE'S SUMMIT, JACKSON COUNTY, MO
CURB INLET DETAIL

PROJECT NUMBER

Drawn By: MJF
Checked By: DL
Date: 04/17
Proj. #:

STM-1

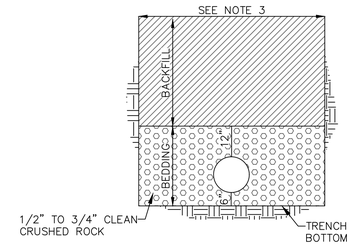

TYPICAL SECTION FOR PLASTIC PIPE
(IN ROCK OR SOIL)

UNDERGROUND PIPE INSTALLATION FOR STORM SEWER LINES

N.T.S.

1. BACKFILL SHALL BE JOB EXECAVATED MATERIAL FREE FROM DEBRIS AND STONES COMPACTED TO 90% OF MAXIMUM DENSITY AT OPTIMUM MOISTURE CONTENT AS DETERMINED BY ASTM D698. BACKFILL UNDER PAVEMENT (EXISTING OR PROPOSED), SHALL BE FLOWABLE FILL.

2. TRENCH BANKS MAY BE CUT BACK ON SLOPES IN ACCORDANCE WITH CURRENT OSHA REGULATIONS, BUT ONLY IN AREAS WHERE THE INCREASED TRENCH WIDTH WILL NOT INTERFERE WITH SURFACE FEATURES. SLOPES MUST NOT EXTEND BELOW TOP OF BEDDING.

3. MINIMUM AND MAXIMUM WIDTHS SHALL BE IN ACCORDANCE WITH PIPE MANUFACTURER'S RECOMMENDATION AS APPROVED ON ENGINEERING PLANS.

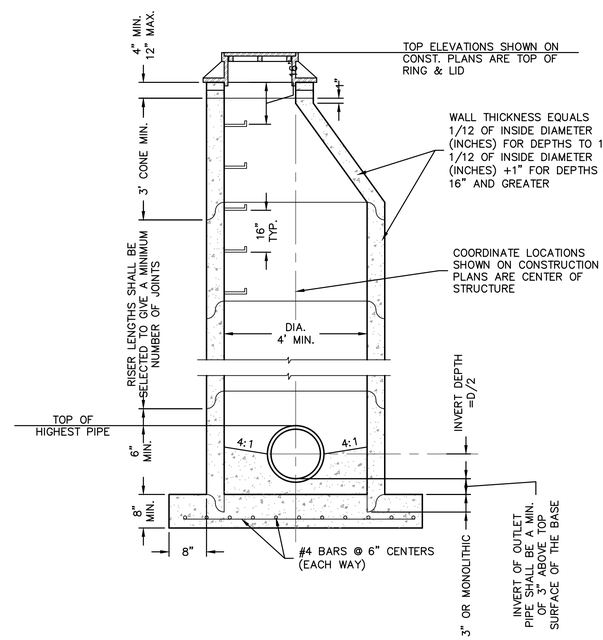

STANDARD PRECAST STORM SEWER MANHOLE
NOT TO SCALE

STORM MANHOLE NOTES

1. ALL MANHOLES ARE TO BE PRECAST CONCRETE AND OF ECCENTRIC CONE TYPE UNLESS OTHERWISE SPECIFIED.
2. MANHOLE TOP ADJUSTMENTS SHALL BE ACCOMPLISHED BY THE USE OF CONCRETE ADJUSTMENT RINGS.
3. TOP OF MANHOLE CASTING SHALL BE SET FLUSH AND ON SAME SLOPE AS FINISHED SURFACE OR AS DIRECTED BY THE ENGINEER.
4. REINFORCEMENT IN ALL SECTIONS SHALL EQUAL OR EXCEED A.S.T.M. C–478 SPECIFICATIONS.
5. THE ENGINEER SHALL DESIGNATE MODIFICATIONS FOR MANHOLES WITH SPECIAL DESIGNS.
6. THE INSIDE DIAMETER OF THE MANHOLE SHALL BE 4'–0" FOR PIPE DIAMETERS FROM 12" THRU 24", 5'–0" FOR PIPE DIAMETERS FROM 27" THRU 36", AND 6'–0" FOR PIPE DIAMETERS 42" THRU 48".
7. CLEARANCE TOLERANCE OF PIPE OPENINGS: THE MAXIMUM ALLOWABLE PIPE OPENING ON A HORIZONTAL AXIS SHALL BE THE OUTSIDE DIAMETER OF THE PIPE PLUS 12". THE MAXIMUM ALLOWABLE PIPE OPENING ON VERTICAL AXIS SHALL BE THE OUTSIDE DIAMETER PLUS 8". THE MAXIMUM CLEARANCE BETWEEN THE OUTSIDE SURFACE OF AN INSTALLED PIPE AND THE CONCRETE OF THE MANHOLE SHALL BE 2".
8. INSTALLATION OF PIPE OPENINGS: ALL REQUIRED PIPE OPENINGS SHALL BE PLANT CAST IN MANHOLE UNITS. FIELD ALTERATIONS OF OPENINGS WILL BE PERMITTED PROVIDED WALLS ARE SCORED WITH A MASONRY SAW TO A DEPTH SUFFICIENT TO SEVER REINFOECING STEEL. A CHIPPING HAMMER MAY THEN BE USED TO REMOVE THE CONCRETE. MINIMUM DISTANCE BETWEEN ANY TWO ADJACENT PIPES SHALL BE 2".
9. NO DIRECT PAYMENT FOR SHAPING FLOOR OR CONNECTING PIPES AS SHOWN ON PLANS.
10. RING AND COVER TO BE NEENAH R–1736, CLAY & BAILEY #2008, DEETER # 1316, OR APPROVED EQUAL. (CASTING MAY VARY BY MUNICIPALITY, REFER TO PLANS & CONTRACT DOCUMENTS.)

RELEASED FOR CONSTRUCTION
As Noted on Plans Review

Development Services Department
Lee's Summit, Missouri
08/27/2022

olsson
Olsson - Civil Engineering
Missouri Certificate of Authority # 001592
1301 Burlington Street
North Kansas City, MO 64116
TEL 816.361.1177
www.olsson.com

STATE OF MISSOURI
JULIE ELAINE SELLERS
NUMBER PE-2017000367
7/28/21
PROFESSIONAL ENGINEER

REV. NO.	DATE	REVISIONS DESCRIPTION	BY

REVISIONS

STORM SEWER DETAILS

NEW LONGVIEW TOWNHOMES
451 SW LONGVIEW BLVD

2021

LEE'S SUMMIT, MO

drawn by:	QL/CM
checked by:	JES
approved by:	JES
QA/QC by:	JES
project no.:	021-02987
drawing no.:	
date:	06.16.2021

SHEET
C208

DWG: F:\2021\02501-03000\021-02987\40-Design\AutoCAD\Final Plans\Sheets\GNCV\PUBLIC STORM SEWER PLANS\C_DTL01_02102987.dwg
DATE: Jul 28, 2021 11:25am XREFS: C_PTTBLK_02102987 USER: qlowrey

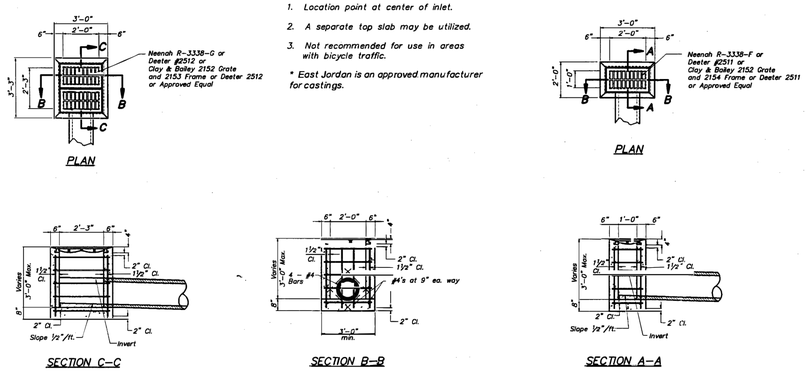

NOTE:

1. Location point at center of inlet.
2. A separate top slab may be utilized.
3. Not recommended for use in areas with bicycle traffic.

* East Jordan is an approved manufacturer for castings.

DOUBLE GRATE INLET DETAILS

SINGLE GRATE INLET DETAILS

AMERICAN PUBLIC WORKS ASSOCIATION
KANSAS CITY
METROPOLITAN CHAPTER
GRATE INLET DETAILS
STANDARD DRAWING NUMBER GI-1
ADOPTED: APRIL 17, 1996

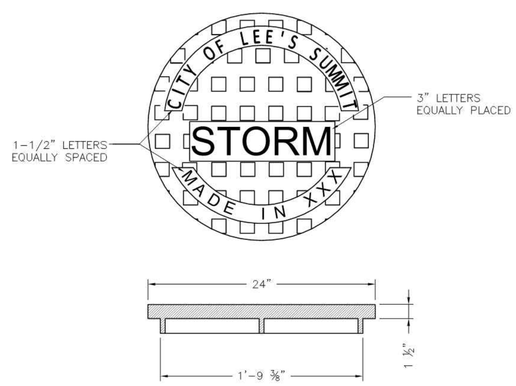

STANDARD 24" MANHOLE COVER
MINIMUM WEIGHT = 160 LB
NOTE: PICK HOLES NOT SHOWN

*COVER AND FRAME MODEL INFORMATION REFER TO THE STORMWATER APPROVED PRODUCT LIST.

LEE'S SUMMIT
MISSOURI
PUBLIC WORKS ENGINEERING DIVISION | 220 SE GREEN STREET | LEE'S SUMMIT, MO 64063

STORM MANHOLE COVER DETAIL

Date: 04/17
Drawn By: MJF
Checked By: DL

STM-6

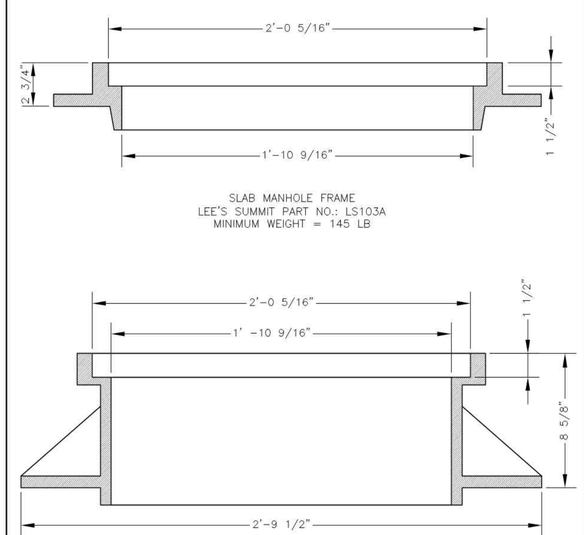

STANDARD 24" MANHOLE FRAME
LEE'S SUMMIT PART NO.: LS101A
MINIMUM WEIGHT = 250 LB

*COVER AND FRAME MODEL INFORMATION REFER TO THE STORMWATER APPROVED PRODUCTS LIST.

LEE'S SUMMIT
MISSOURI
PUBLIC WORKS ENGINEERING DIVISION | 220 SE GREEN STREET | LEE'S SUMMIT, MO 64063

STORM MANHOLE FRAME DETAIL

Date: 04/17
Drawn By: MJF
Checked By: DL

STM-7

RELEASED FOR CONSTRUCTION
As Noted on Plans Review

Development Services Department
Lee's Summit, Missouri
08/27/2022

olsson
Olsson - Civil Engineering
Missouri Corporate Authority # 001592
1301 Burlington Street
North Kansas City, MO 64116
TEL 816.361.1177
www.olsson.com

STATE OF MISSOURI
JULIE ELAINE SELLERS
NUMBER PE-2017000367
7/28/21
PROFESSIONAL ENGINEER

REV. NO.	DATE	REVISIONS DESCRIPTION	BY

REVISIONS

STORM SEWER DETAILS

NEW LONGVIEW TOWNHOMES
451 SW LONGVIEW BLVD

LEE'S SUMMIT, MO

2021

drawn by:	QL/CM
checked by:	JES
approved by:	JES
QA/QC by:	JES
project no.:	021-02987
drawing no.:	
date:	06.16.2021

SHEET
C209

DWG: F:\2021\02501-03000\021-02987\40-Design\AutoCAD\Final Plans\Sheets\GNCV\PUBLIC STORM SEWER PLANS\C_DTL01_02102987.dwg USER: qlowrey
DATE: Jul 28, 2021 11:25am XREFS: C_PTTBLK_02102987