Scott E. Wyssling, PE
Jon P. Ward, SE, PE
Gregory T. Elvestad, PE

76 North Meadowbrook Drive
Alpine, UT 84004
office (201) 874-3483
swyssling@wysslingconsulting.com

June 13, 2022

ADT Solar
22171 MCH Road
Mandeville, LA 70471

Re: Engineering Services
Monteleone Residence
504 Northwest Main Street, Lees Summit MO
8.280 kW System

To Whom It May Concern:

We have received information regarding solar panel installation on the roof of the above referenced structure. Our evaluation of the structure is to verify the existing capacity of the roof system and its ability to support the additional loads imposed by the proposed solar system.

A. Site Assessment Information

1. Site visit documentation identifying attic information including size and spacing of framing for the existing roof structure.
2. Design drawings of the proposed system including a site plan, roof plan and connection details for the solar panels. This information will be utilized for approval and construction of the proposed system.

B. Description of Structure:

Roof Framing: Rafters, 2x4 dimensional lumber at 24" on center.
Roof Material: Composite Asphalt Shingles
Roof Slopes: 30 degrees
Attic Access: Accessible
Foundation: Permanent

C. Loading Criteria Used

- **Dead Load**
  - Existing Roofing and framing = 7 psf
  - New Solar Panels and Racking = 3 psf
  - TOTAL = 10 PSF
- **Live Load** = 20 psf (reducible) – 0 psf at locations of solar panels
- **Ground Snow Load** = 20 psf
- **Wind Load** based on ASCE 7-16
  - Ultimate Wind Speed = 115 mph (based on Risk Category II)
  - Exposure Category C

Analysis performed of the existing roof structure utilizing the above loading criteria is in accordance with the 2018 International Residential Code, including provisions allowing existing structures to not require strengthening if the new loads do not exceed existing design loads by 105% for gravity elements and 110% for seismic elements. This analysis indicates that the existing framing will support the additional panel loading without damage, if installed correctly.

D. Solar Panel Anchorage

1. The solar panels shall be mounted in accordance with the most recent Unirac installation manual. If during solar panel installation, the roof framing members appear unstable or deflect non-uniformly, our office should be notified before proceeding with the installation.
2. The maximum allowable withdrawal force for a $^{5}/_{16}$" lag screw is 235 lbs per inch of penetration as identified in the National Design Standards (NDS) of timber construction specifications. Based on a minimum penetration depth of 2½", the allowable capacity per connection is greater than the design withdrawal force (demand). Considering the variable factors for the existing roof framing and installation tolerances, the connection using one $^{5}/_{16}$" diameter lag screw with a minimum of 2½" embedment will be adequate and will include a sufficient factor of safety.
3. Considering the wind speed, roof slopes, size and spacing of framing members, and condition of the roof, the panel supports shall be placed no greater than 48" on centers.
4. Panel supports connections shall be staggered to distribute load to adjacent framing members.

Based on the above evaluation, this office certifies that with the racking and mounting specified, the existing roof system will adequately support the additional loading imposed by the solar system. This evaluation is in conformance with the 2018 IRC, current industry standards and practice, and is based on information supplied to us at the time of this report.

Should you have any questions regarding the above or if you require further information do not hesitate to contact me.

Very truly yours,

Scott E. Wyssling, PE
Missouri License No. 2019011786
Wyssling Consulting, PLLC
Missouri COA # 2020037943

STATE OF MISSOURI
SCOTT E. WYSSLING
NUMBER
PE-2019011786
PROFESSIONAL ENGINEER

Wyssling Consulting
76 N Meadowbrook Drive Alpine UT 84004
COA # 2020037943

PHOTOVOLTAIC ROOF MOUNT SYSTEM

23 MODULES-ROOF MOUNTED - 8.280 KW DC STC, 7.631 KW DC PTC, 6.670 KW AC

504 NORTHWEST MAIN STREET, LEES SUMMIT, MO 64063

PROJECT DATA

PROJECT ADDRESS	504 NORTHWEST MAIN STREET, LEES SUMMIT, MO 64063
OWNER:	CRYSTAL MONTELEONE
CONTRACTOR:	ADT SOLAR LLC PHONE: (985) 238-0864
DESIGNER:	ESR
SCOPE:	8.280 KW DC ROOF MOUNT SOLAR PV SYSTEM WITH 23 HANWHA Q CELLS : Q.PEAK DUO BLK-G10+ 360W PV MODULES WITH 23 ENPHASE IQ8PLUS-72-2-US MICROINVERTERS

AUTHORITIES HAVING JURISDICTION:
BUILDING: LEE'S SUMMIT, CITY OF (MO)
ZONING: LEE'S SUMMIT, CITY OF (MO)
UTILITY: EVERGY MISSOURI WEST (MO)

SHEET INDEX

GENERAL NOTES

1. ALL COMPONENTS ARE UL LISTED AND CEC CERTIFIED, WHERE WARRANTED.
2. THE SOLAR PV SYSTEM WILL BE INSTALLED IN ACCORDANCE WITH ARTICLE 690 OF THE NEC 2017.
3. THE UTILITY INTERCONNECTION APPLICATION MUST BE APPROVED AND PV SYSTEM INSPECTED PRIOR TO PARALLEL OPERATION.
4. ALL CONDUCTORS OF A CIRCUIT, INCLUDING THE EGC, MUST BE INSTALLED IN THE SAME RACEWAY, OR CABLE, OR OTHERWISE RUN WITH THE PV ARRAY CIRCUIT CONDUCTORS WHEN THEY LEAVE THE VICINITY OF THE PV ARRAY.
5. WHERE METALLIC CONDUIT CONTAINING DC CONDUCTORS IS USED INSIDE THE BUILDING, IT SHALL BE IDENTIFIED AS "CAUTION: SOLAR CIRCUIT" EVERY 10FT.
6. HEIGHT OF THE AC DISCONNECT SHALL NOT EXCEED 6'-7" PER NEC CODE 240.24.
7. A GROUNDING ELECTRODE SYSTEM IN ACCORDANCE WITH CEC 690.47 AND 250.50 THROUGH 60 AND 250-166 SHALL BE PROVIDED. PER NEC GROUNDING ELECTRODE SYSTEM OF EXISTING BUILDING MAY BE USED AND BONDED TO THE SERVICE ENTRANCE. IF EXISTING SYSTEM IS INACCESSIBLE OR INADEQUATE A SUPPLEMENTAL GROUNDING ELECTRODE WILL BE USED AT THE INVERTER LOCATION CONSISTING OF A UL LISTED 8 FT. GROUND ROD WITH ACORN CLAMP. GROUNDING ELECTRODE CONDUCTORS SHALL BE NO LESS THAN #8 AWG AND NO LARGER THAN #6 AWG COPPER AND BONDED TO THE EXISTING GROUNDING ELECTRODE TO PROVIDE FOR A COMPLETE SYSTEM.
8. PHOTOVOLTAIC MODULES ARE TO BE CONSIDERED NON-COMBUSTIBLE.
9. PHOTOVOLTAIC INSTALLATION WILL NOT OBSTRUCT ANY PLUMBING. MECHANICAL, OR BUILDING ROOF VENTS.
10. ALL WIRING MUST BE PROPERLY SUPPORTED BY DEVICES OR MECHANICAL MEANS DESIGNED AND LISTED FOR SUCH USE. WIRING MUST BE PERMANENTLY AND COMPLETELY HELD OFF THE ROOF SURFACE.
11. ALL SINAGE TO BE PLACED IN ACCORDANCE WITH THE LOCAL BUILDING CODE. IF EXPOSED TO SUNLIGHT, IT SHALL BE UV RESISTANT. ALL PLAQUES AND SINAGE WILL BE INSTALLED AS REQUIRED BY THE NEC AND AHJ.
12. INVERTER(S) USED IN UNGROUNDED SYSTEM SHALL BE UL 1741 LISTED.
13. THE INSTALLATION OF EQUIPMENT AND ALL ASSOCIATED WIRING AND INTERCONNECTION SHALL BE PERFORMED ONLY BY QUALIFIED PERSONS [NEC 690.4(C)]
14. ALL OUTDOOR EQUIPMENT SHALL BE NEMA 3R RATED (OR BETTER), INCLUDING ALL ROOF MOUNTED TRANSITION BOXES AND SWITCHES.
15. ALL EQUIPMENT SHALL BE PROPERLY GROUNDED AND BONDED IN ACCORDANCE WITH NEC ARTICLE 250.
16. SYSTEM GROUNDING SHALL BE IN ACCORDANCE WITH NEC 690.41.
17. PV SYSTEM CIRCUITS INSTALLED ON OR IN BUILDINGS SHALL INCLUDE A RAPID SHUTDOWN FUNCTION IN ACCORDANCE WITH NEC 690.12
18. DISCONNECTING MEANS SHALL BE LOCATED IN A VISIBLE, READILY ACCESSIBLE LOCATION WITHIN THE PV SYSTEM EQUIPMENT OR A MAXIMUM OF 10 FEET AWAY FROM THE SYSTEM [NEC 690.13(A)]
19. ALL WIRING METHODS SHALL BE IN ACCORDANCE WITH NEC 690.31
20. WORK CLEARANCES AROUND ELECTRICAL EQUIPMENT WILL BE MAINTAINED PER NEC 110.26(A)(1), 110.26(A)(2) AND 110.26(A)(3).
21. ROOFTOP MOUNTED PHOTOVOLTAIC PANELS AND MODULES SHALL BE TESTED, LISTED & IDENTIFIED IN ACCORDANCE WITH UL1703
22. ELECTRICAL CONTRACTOR TO PROVIDE CONDUIT EXPANSION JOINTS AND ANCHOR CONDUIT RUNS AS REQUIRED PER NEC.

VICINITY MAP

HOUSE PHOTO

CODE REFERENCES

PROJECT TO COMPLY WITH THE FOLLOWING:

2018 INTERNATIONAL BUILDING CODE
2018 INTERNATIONAL RESIDENTIAL CODE
2018 INTERNATIONAL FIRE CODE
2017 NATIONAL ELECTRICAL CODE

ADT Solar
22171 MCH RD
MANDEVILLE, LA 70471
PHONE: 9152011490

REVISIONS		
DESCRIPTION	DATE	REV
INITIAL DESIGN	06/13/2022	

STATE OF MISSOURI
SCOTT E WYSSLING
NUMBER PE-2019011786
PROFESSIONAL ENGINEER

Wyssling Consulting, PLLC
76 N Meadowbrook Drive Alpine UT 84004
Missouri COA # 2020037943

DATE: 06/13/2022

PROJECT NAME & ADDRESS

CRYSTAL MONTELEONE RESIDENCE

504 NORTHWEST MAIN STREET, LEES SUMMIT, MO 64063

SHEET NAME

COVER SHEET

SHEET SIZE

ANSI B
11" X 17"

SHEET NUMBER

PV-1

PROJECT DESCRIPTION:

23 X HANWHA Q CELLS : Q.PEAK DUO BLK-G10+ 360W PV MODULES
ROOF MOUNTED SOLAR PHOTOVOLTAIC MODULES
DC SYSTEM SIZE: 23 x 360 = 8.280KW DC
AC SYSTEM SIZE: 23 x 290 = 6.670KW AC

EQUIPMENT SUMMARY
23 HANWHA Q CELLS :Q.PEAK DUO BLK-G10+ 360W MONO MODULES
23 ENPHASE IQ8PLUS-72-2-US MICROINVERTERS

ROOF ARRAY AREA #1:- 443.67 SQ FT.

NOTE: VISIBLE, LOCKABLE, LABELED AC DISCONNECT
LOCATED WITHIN 10' OF UTILITY METER

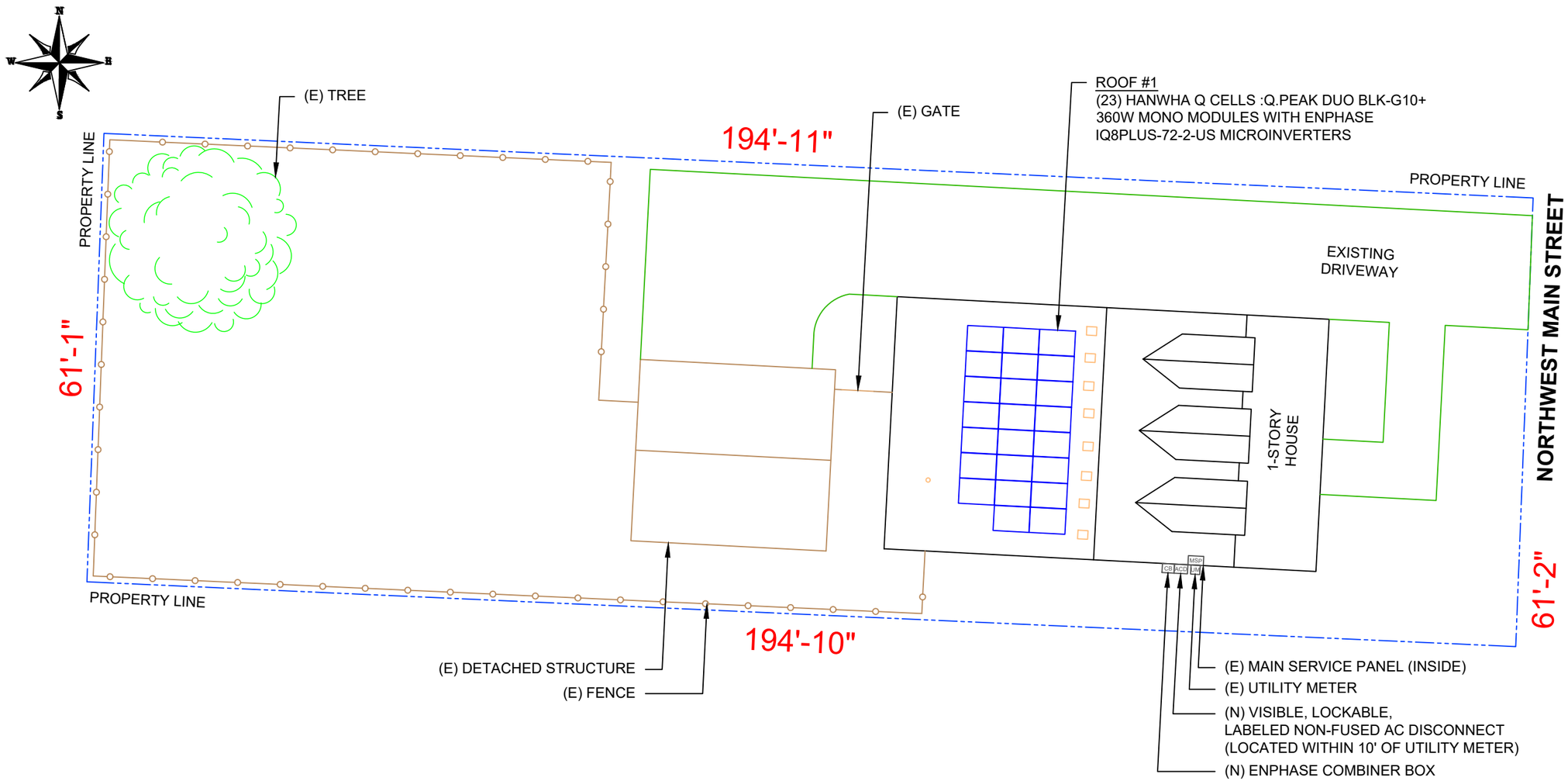

DESIGN SPECIFICATION
OCCUPANCY: II
CONSTRUCTION: SINGLE-FAMILY
ZONING: RESIDENTIAL
GROUND SNOW LOAD: REFER STRUCTURAL LETTER
WIND EXPOSURE: REFER STRUCTURAL LETTER
WIND SPEED: REFER STRUCTURAL LETTER

1 SITE PLAN
PV-2 SCALE: 1/16" = 1'-0"

ADT Solar
22171 MCH RD
MANDEVILLE, LA 70471
PHONE: 9152011490

REVISIONS		
DESCRIPTION	DATE	REV
INITIAL DESIGN	06/13/2022	

STATE OF MISSOURI
SCOTT E. WYSSLING
NUMBER
PE-2019011786
PROFESSIONAL ENGINEER

Wyssling Consulting, PLLC
76 N Meadowbrook Drive Alpine UT 84004
Missouri COA # 2020037943

DATE: 06/13/2022

PROJECT NAME & ADDRESS
CRYSTAL MONTELEONE RESIDENCE
504 NORTHWEST MAIN STREET,
LEES SUMMIT, MO 64063

SHEET NAME
SITE PLAN

SHEET SIZE
ANSI B
11" X 17"

SHEET NUMBER
PV-2

MODULE TYPE, DIMENSIONS & WEIGHT

NUMBER OF MODULES = 23 MODULES
MODULE TYPE = HANWHA Q CELLS : Q.PEAK DUO BLK-G10+ 360W MONO MODULES
MODULE WEIGHT = 43.8 LBS / 19.9KG.
MODULE DIMENSIONS = 67.6" x 41.1" = 19.29 SF

ROOF DESCRIPTION				
ROOF TYPE			ASPHALT SHINGLE	
ROOF	ROOF PITCH	AZIMUTH	RAFTER SIZE	RAFTER SPACING
#1	30°	273°	2X6	24"

ARRAY AREA & ROOF AREA CALC'S			
TOTAL # OF MODULES	TOTAL ARRAY AREA (Sq. Ft.)	TOTAL ROOF AREA (Sq. Ft.)	ROOF AREA COVERED BY ARRAY (%)
23	443.77	2025.26	22

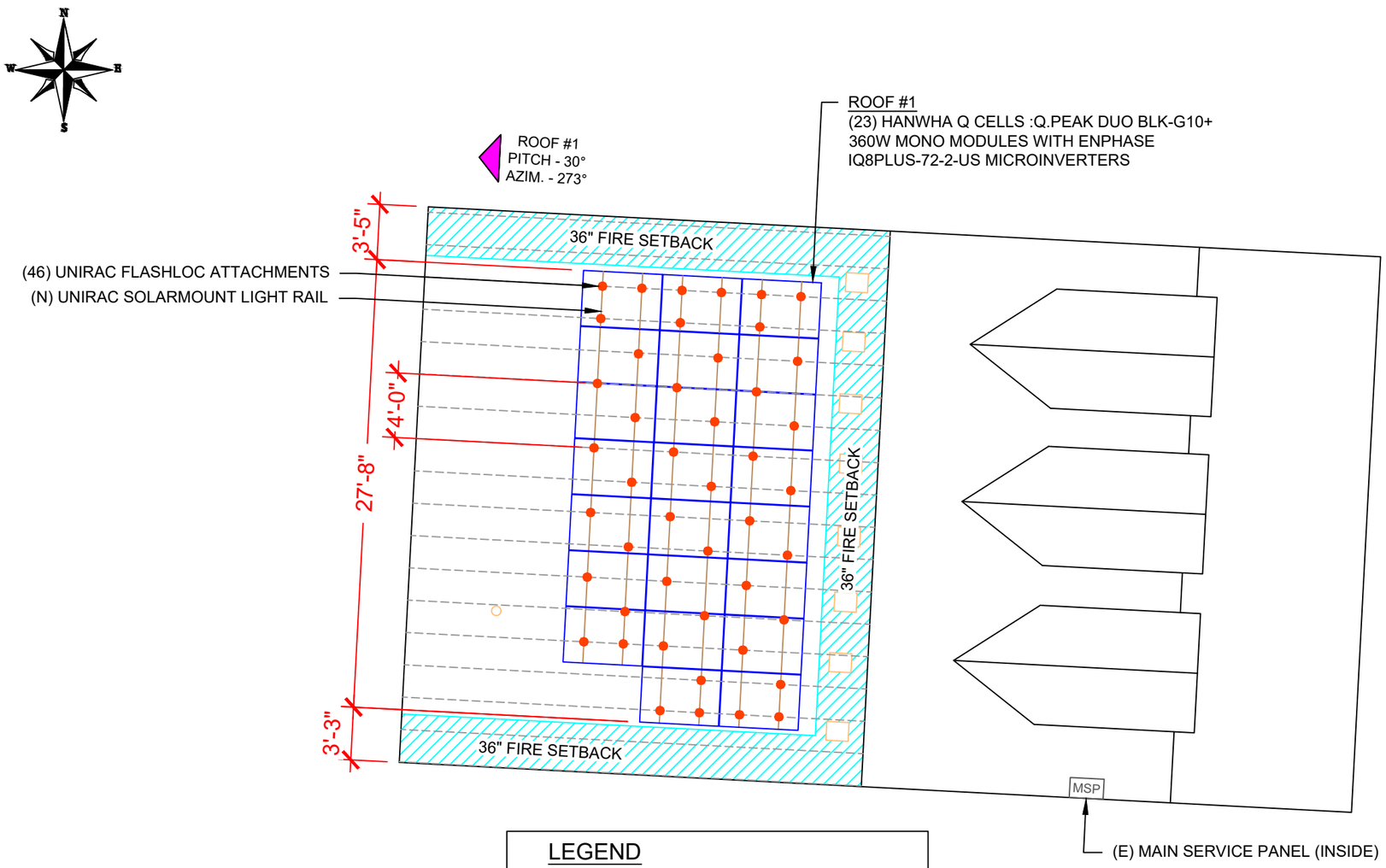

LEGEND

- JB - JUNCTION BOX
- SD - SOLADECK
- INV - INVERTER
- CB - COMBINER BOX
- ACD - AC DISCONNECT
- UM - UTILITY METER
- MSP - MAIN SERVICE PANEL
- VENT, ATTIC FAN (ROOF OBSTRUCTION)
- ROOF ATTACHMENT
- TRUSS
- CONDUIT

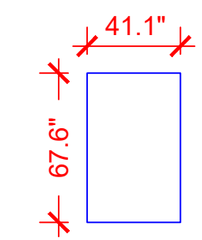

HANWHA Q CELLS :
Q.PEAK DUO BLK-G10+
360W MODULES

1 ROOF PLAN & MODULES
PV-3 SCALE: 1/8" = 1'-0"

ADT Solar
22171 MCH RD
MANDEVILLE, LA 70471
PHONE: 9152011490

REVISIONS		
DESCRIPTION	DATE	REV
INITIAL DESIGN	06/13/2022	

STATE OF MISSOURI
SCOTT E WYSSLING
NUMBER PE-2019011786
PROFESSIONAL ENGINEER

Wyssling Consulting, PLLC
76 N Meadowbrook Drive Alpine UT 84004
Missouri COA # 2020037943

DATE: 06/13/2022

PROJECT NAME & ADDRESS
CRYSTAL MONTELEONE RESIDENCE
504 NORTHWEST MAIN STREET, LEES SUMMIT, MO 64063

SHEET NAME
ROOF PLAN & MODULES

SHEET SIZE
ANSI B
11" X 17"

SHEET NUMBER
PV-3

DC SYSTEM SIZE: 23 x 360 = 8.280KW DC
AC SYSTEM SIZE: 23 x 290 = 6.670KW AC
(23) HANWHA Q CELLS : Q.PEAK DUO BLK-G10+ 360W MONO MODULES
WITH (23) ENPHASE IQ8PLUS-72-2-US MICROINVERTERS
LOCATED UNDER EACH PANEL (240V)

CIRCUIT LEGENDS

- CIRCUIT #1
- CIRCUIT #2

LEGEND

- JB - JUNCTION BOX
- SD - SOLADECK
- INV - INVERTER
- CB - COMBINER BOX
- ACD - AC DISCONNECT
- UM - UTILITY METER
- MSP - MAIN SERVICE PANEL
- VENT, ATTIC FAN (ROOF OBSTRUCTION)
- ROOF ATTACHMENT
- TRUSS
- CONDUIT

BILL OF MATERIALS

EQUIPMENT	QTY	DESCRIPTION
SOLAR PV MODULES	23	HANWHA Q CELLS : Q.PEAK DUO BLK-G10+ 360W MODULE
MICRO INVERTERS	23	ENPHASE IQ8PLUS-72-2-US MICROINVERTERS
SOLADECK	1	SOLADECK
RAIL	12	UNIRAC SM LIGHT RAIL, 168" SILVER
SPLICE	6	SPLICE KIT
MID MODULE CLAMPS	34	MID MODULE CLAMPS
END CLAMPS	24	END CLAMPS / STOPPER SLEEVE
ATTACHMENTS	46	UNIRAC FLASHLOC ATTACHMENT
INVERTER MOUNT CLIP	23	INVERTER MOUNT CLIP
INVERTER T-BOLTS	23	INVERTER T-BOLTS
TRUNK CABLES	28	TRUNK CABLES
GROUND LUGS	2	GROUND LUGS
TP LINKS	1	TP LINKS
TERMINAL BLOCKS	5	TERMINAL BLOCKS
ZIPTIES	100	ZIPTIES
TRUNK BRANCH TERMINAL	6	TRUNK BRANCH TERMINAL
TRUNK WATER TIGHT COVER	6	TRUNK WATER TIGHT COVER

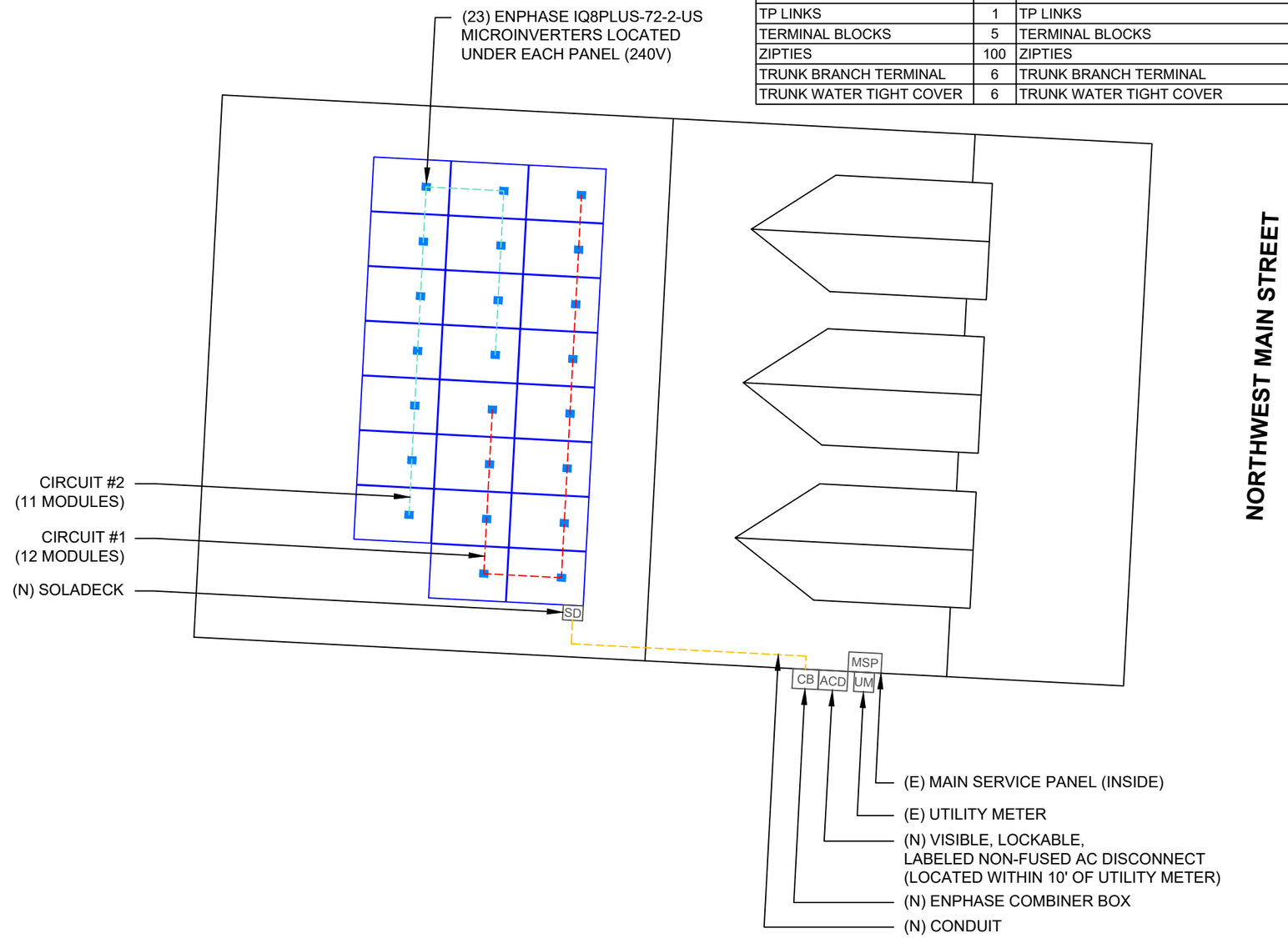

1 ELECTRICAL PLAN
PV-4 SCALE: 1/8" = 1'-0"

ADT Solar
22171 MCH RD
MANDEVILLE, LA 70471
PHONE: 9152011490

REVISIONS		
DESCRIPTION	DATE	REV
INITIAL DESIGN	06/13/2022	

DATE: 06/13/2022

PROJECT NAME & ADDRESS
CRYSTAL MONTELEONE RESIDENCE
504 NORTHWEST MAIN STREET,
LEES SUMMIT, MO 64063

SHEET NAME
ELECTRICAL PLAN

SHEET SIZE
ANSI B
11" X 17"

SHEET NUMBER
PV-4

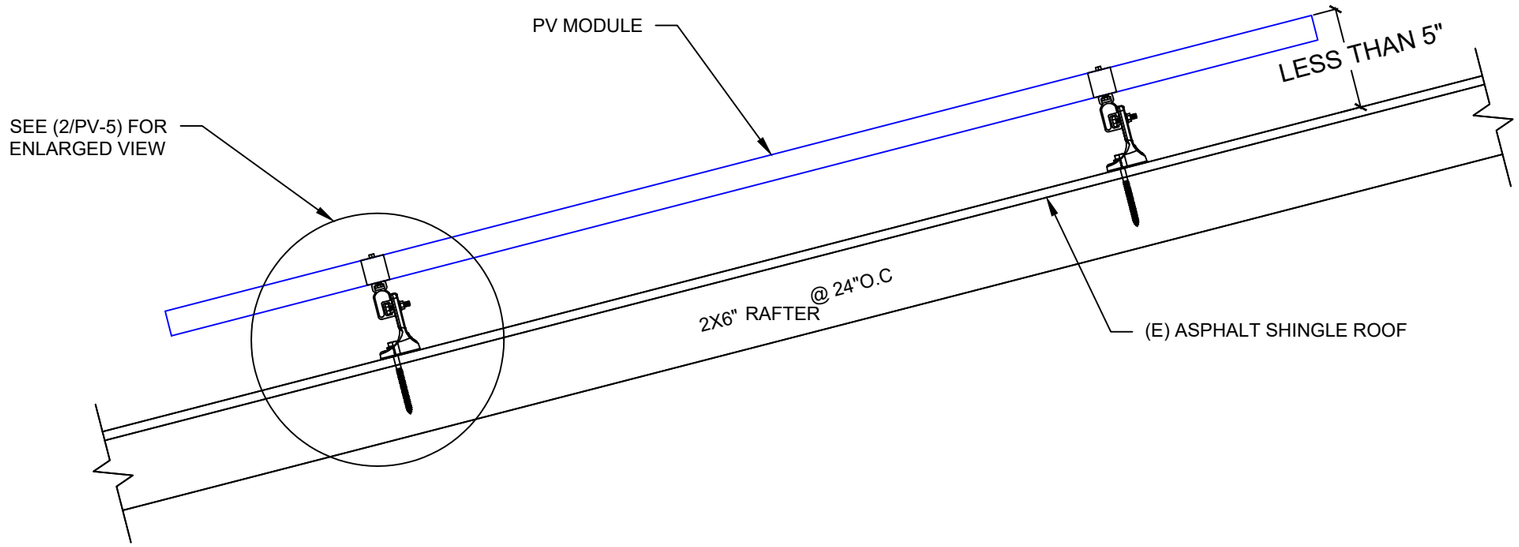

1 ATTACHMENT DETAIL

PV-5 SCALE: N.T.S.

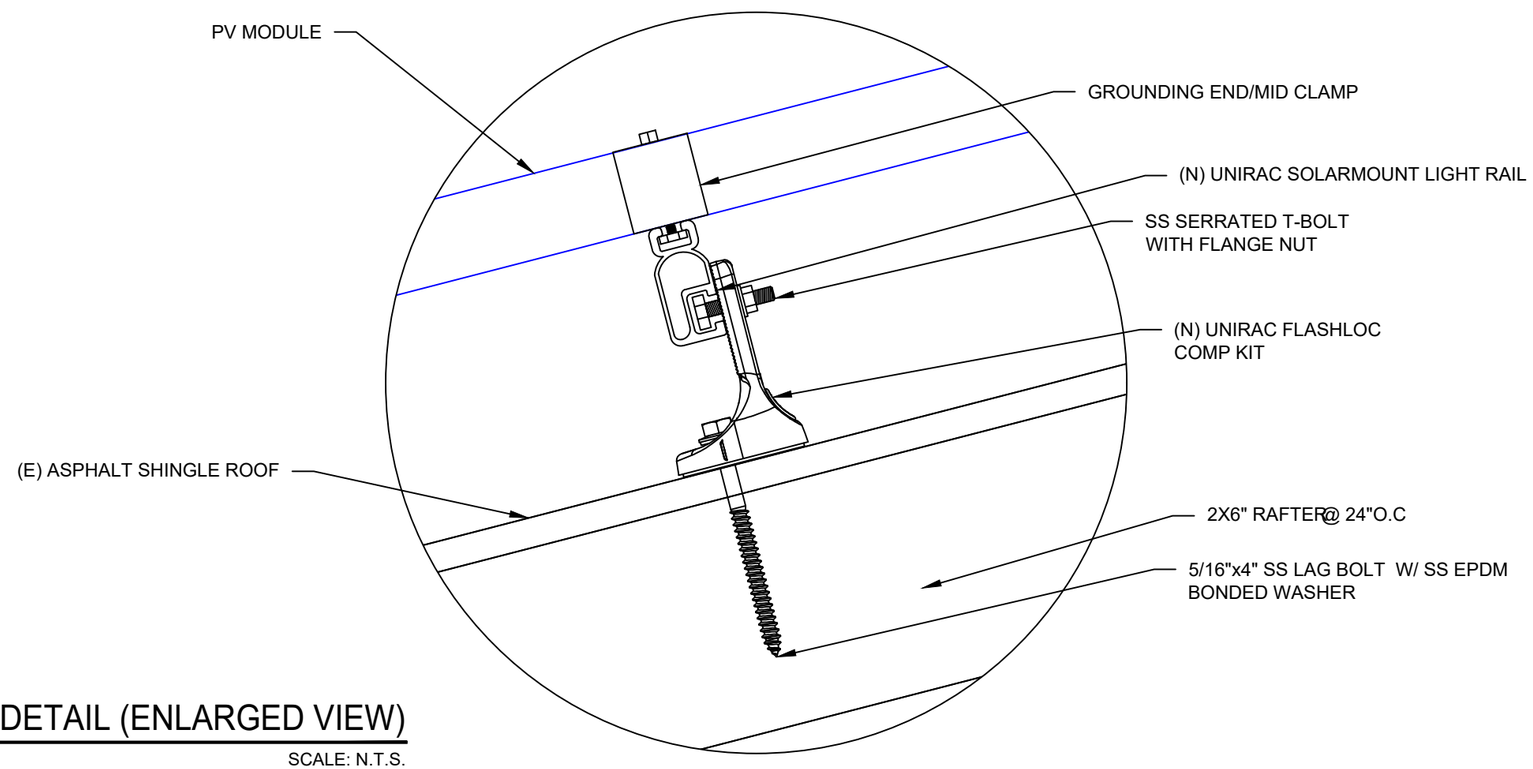

2 ATTACHMENT DETAIL (ENLARGED VIEW)

PV-5 SCALE: N.T.S.

ADT Solar
22171 MCH RD
MANDEVILLE, LA 70471
PHONE: 9152011490

REVISIONS

DESCRIPTION	DATE	REV
INITIAL DESIGN	06/13/2022	

STATE OF MISSOURI
SCOTT E WYSSLING
NUMBER
PE-2019011786
PROFESSIONAL ENGINEER

Wyssling Consulting, PLLC
76 N Meadowbrook Drive Alpine UT 84004
Missouri COA # 2020037943

DATE: 06/13/2022

PROJECT NAME & ADDRESS

CRYSTAL MONTELEONE RESIDENCE

504 NORTHWEST MAIN STREET, LEES SUMMIT, MO 64063

SHEET NAME

STRUCTURAL DETAIL

SHEET SIZE

ANSI B
11" X 17"

SHEET NUMBER

PV-5

DC SYSTEM SIZE: 23 x 360 = 8.280KW DC
AC SYSTEM SIZE: 23 x 290 = 6.670KW AC

(23) HANWHA Q CELLS : Q.PEAK DUO BLK-G10+ 360W MONO MODULES
WITH (23) ENPHASE IQ8PLUS-72-2-US MICROINVERTERS
LOCATED UNDER EACH PANEL (240V)
(1) BRANCH CIRCUIT OF 12 MODULES AND
(1) BRANCH CIRCUIT OF 11 MODULES CONNECTED IN PARALLEL

BACKFEED BREAKER CALCULATION (120% RULE):
(MAIN BUSS X 1.2 - MAIN BREAKER) >= (INVERTER CURRENT*1.25)
(200A X 1.2 - 200A) >= (34.79A)
(40A) >= (34.79A) HENCE OK

OCPD CALCULATIONS:
NEC 690.9(B)
(23 IQ8 PLUS) * 1.21A * 1.25
=34.79A

INTERCONNECTION NOTES:
1. INTERCONNECTION SIZING, LIMITATIONS AND COMPLIANCE DETERMINED IN ACCORDANCE WITH [NEC 705.12], AND [NEC 690.59].
2. GROUND FAULT PROTECTION IN ACCORDANCE WITH [NEC 215.9], [NEC 230.95].
3. ALL EQUIPMENT TO BE RATED FOR BACKFEEDING.
4. PV BREAKER TO BE POSITIONED AT THE OPPOSITE END OF THE BUSBAR RELATIVE TO THE MAIN BREAKER.

DISCONNECT NOTES:
1. DISCONNECTING SWITCHES SHALL BE WIRED SUCH THAT WHEN THE SWITCH IS OPENED THE CONDUCTORS REMAINING LIVE ARE CONNECTED TO THE TERMINALS MARKED “LINE SIDE” (TYPICALLY THE UPPER TERMINALS)
2. AC DISCONNECT MUST BE ACCESSIBLE TO QUALIFIED UTILITY PERSONNEL, BE LOCKABLE, AND BE A VISIBLE-BREAK SWITCH
3. DISCONNECT MEANS AND THEIR LOCATION SHALL BE IN ACCORDANCE WITH [NEC 225.31] AND [NEC 225.32].

GROUNDING & GENERAL NOTES:
1. PV GROUNDING ELECTRODE SYSTEM NEEDS TO BE INSTALLED IN ACCORDANCE WITH [NEC 690.43]
2. PV INVERTER IS UNGROUNDED, TRANSFORMER-LESS TYPE.
3. DC GEC AND AC EGC TO REMAIN UNSPLICED, OR SPLICED TO EXISTING ELECTRODE
4. ANY EXISTING WIRING INVOLVED WITH PV SYSTEM CONNECTION THAT IS FOUND TO BE INADEQUATE PER CODE SHALL BE CORRECTED PRIOR TO FINAL INSPECTION.
5. SOLADECK QUANTITIES, AND PLACEMENT SUBJECT TO CHANGE IN THE FIELD - SOLADECK DEPICTED ON ELECTRICAL DIAGRAM REPRESENT WIRE TYPE TRANSITIONS.
6. AC DISCONNECT NOTED IN EQUIPMENT SCHEDULE OPTIONAL IF OTHER AC DISCONNECTING MEANS IS LOCATED WITHIN 10' OF SERVICE DISCONNECT.
7. RACEWAYS AND CABLES EXPOSED TO SUNLIGHT ON ROOFTOPS SHOULD BE INSTALLED MORE THAN 7/8" ABOVE THE ROOF USING CONDUIT SUPPORTS.
8. VERIFY UFER/EXISTING ROD OR ADD TWO GROUNDING RODS(5/8" X 8' EMBEDMENT) SPACED 6 FEET MINIMUM APART.
9. BOND COLD WATER AND GAS LINES(IF PRESENT) TO GROUNDING ELECTRODE CONDUCTOR

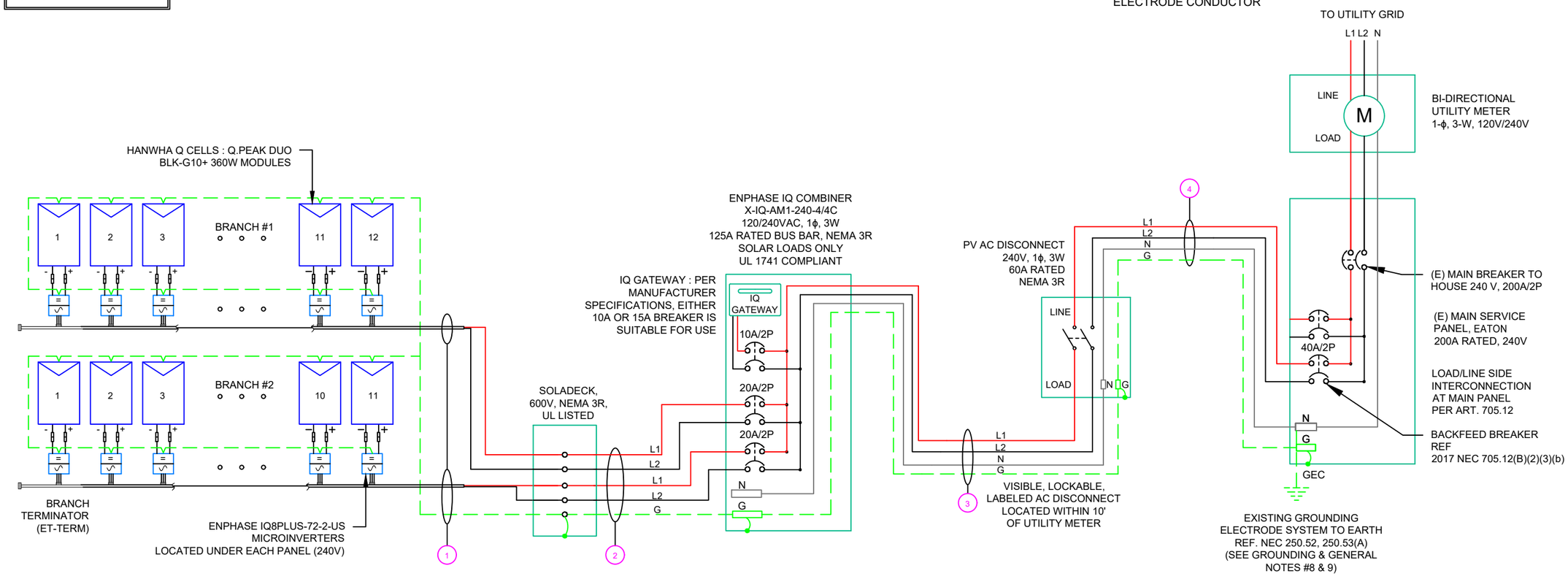

	QTY	CONDUCTOR INFORMATION		CONDUIT TYPE	CONDUIT SIZE
1	(4)	#12AWG -	Q CABLE (L1 & L2 NO NEUTRAL)	N/A	N/A
	(1)	#6AWG -	BARE COPPER IN FREE AIR		
2	(4)	#12AWG -	THWN-2 (L1,L2) (EXTERIOR) / #12/2 ROMEX IN ATTIC	EMT, LFMC OR PVC	1"
	(1)	#6AWG -	THWN-2 GND		
3	(2)	#6AWG -	THWN-2 (L1,L2)	EMT, LFMC OR PVC	1"
	(1)	#6AWG -	THWN-2 N		
	(1)	#6AWG -	THWN-2 GND		
4	(2)	#6AWG -	THWN-2 (L1,L2)	EMT, LFMC OR PVC	1"
	(1)	#6AWG -	THWN-2 N		
	(1)	#6AWG -	THWN-2 GND		

(GN) GENERAL NOTES :
1. CONDUIT TO BE UL LISTED FOR WET LOCATION AND UV PROTECTED (EX. -EMT, SCH 80 PVC OR RMC).
2. FMC MAYBE USED IN INDOOR APPLICATIONS WHERE PERMITTED BY NEC ART. 348

1 ELECTRICAL LINE DIAGRAM
PV-6 SCALE: N.T.S.

ADT Solar
22171 MCH RD
MANDEVILLE, LA 70471
PHONE: 9152011490

REVISIONS		
DESCRIPTION	DATE	REV
INITIAL DESIGN	06/13/2022	

DATE: 06/13/2022

PROJECT NAME & ADDRESS
CRYSTAL MONTELEONE RESIDENCE
504 NORTHWEST MAIN STREET, LEES SUMMIT, MO 64063

SHEET NAME
ELECTRICAL LINE DIAGRAM

SHEET SIZE
ANSI B
11" X 17"

SHEET NUMBER
PV-6

INVERTER SPECIFICATIONS	
MANUFACTURER / MODEL #	ENPHASE IQ8PLUS-72-2-US MICROINVERTERS
MIN/MAX DC VOLT RATING	30V MIN/ 58V MAX
MAX INPUT POWER	235W-440W
NOMINAL AC VOLTAGE RATING	240V/ 211-264V
MAX AC CURRENT	1.21A
MAX MODULES PER CIRCUIT	13 (SINGLE PHASE)
MAX OUTPUT POWER	290 VA

SOLAR MODULE SPECIFICATIONS	
MANUFACTURER / MODEL #	HANWHA Q CELLS : Q.PEAK DUO BLK-G10+ 360W MODULE
VMP	34.31V
IMP	10.49A
VOC	41.18V
ISC	11.04A
TEMP. COEFF. VOC	-0.26%/°C
MODULE DIMENSION	67.6"L x 41.1"W x 1.26"D (In Inch)

AMBIENT TEMPERATURE SPECS	
RECORD LOW TEMP	-25°C
AMBIENT TEMP (HIGH TEMP 2%)	35°C
MODULE TEMPERATURE COEFFICIENT OF Voc	-0.26%/°C

PERCENT OF VALUES	NUMBER OF CURRENT CARRYING CONDUCTORS IN EMT
.80	4-6
.70	7-9
.50	10-20

AC CALCULATIONS

CIRCUIT ORIGIN	CIRCIUT DESTINATION	VOLTAGE (V)	FULL LOAD AMPS "FLA" (A)	FLA*1.25 (A)	OCPD SIZE (A)	NEUTRAL SIZE	GROUND SIZE	CONDUCTOR SIZE	75°C AMPACITY (A)	AMPACITY CHECK #1	AMBIENT TEMP. (°C)	TOTAL CC CONDUCTORS IN RACEWAY	90°C AMPACITY (A)	DERATION FACTOR FOR AMBIENT TEMPERATURE NEC 310.15(B)(2)(a)	DERATION FACTOR FOR CONDUCTORS PER RACEWAY NEC 310.15(B)(3)(a)	90°C AMPACITY DERATED (A)	AMPACITY CHECK #2	FEEDER LENGTH (FEET)	CONDUCTOR RESISTANCE (OHM/KFT)	VOLTAGE DROP AT FLA (%)	CONDUIT SIZE	CONDUIT FILL (%)
CIRCUIT 1	SOLADECK	240	14.52	18.15	20	N/A	BARE COPPER #6 AWG	CU #12 AWG	25	PASS	35	2	30	0.96	1	28.8	PASS			0.65	N/A	#N/A
CIRCUIT 2	SOLADECK	240	13.31	16.6375	20	N/A	BARE COPPER #6 AWG	CU #12 AWG	25	PASS	35	2	30	0.96	1	28.8	PASS			0.55	N/A	#N/A
SOLADECK	COMBINER PANEL	240	14.52	18.15	20	N/A	CU #6 AWG	CU #12 AWG	25	PASS	35	4	30	0.96	0.8	23.04	PASS	20	1.98	0.479	1" PVC	12.48798
COMBINER PANEL	AC DISCONNECT	240	27.83	34.7875	40	CU #6 AWG	CU #6 AWG	CU #6 AWG	65	PASS	35	2	75	0.96	1	72	PASS	5	0.491	0.057	1" PVC	24.375
AC DISCONNECT	POI	240	27.83	34.7875	40	CU #6 AWG	CU #6 AWG	CU #6 AWG	65	PASS	35	2	75	0.96	1	72	PASS	5	0.491	0.057	1" PVC	24.375

Circuit 1 Voltage Drop	1.243
Circuit 2 Voltage Drop	1.143

ELECTRICAL NOTES

1. ALL EQUIPMENT TO BE LISTED BY UL OR OTHER NRTL, AND LABELED FOR ITS APPLICATION.
2. ALL CONDUCTORS SHALL BE COPPER, RATED FOR 600 V AND 90 DEGREE C WET ENVIRONMENT.
3. WIRING, CONDUIT, AND RACEWAYS MOUNTED ON ROOFTOPS SHALL BE ROUTED DIRECTLY TO, AND LOCATED AS CLOSE AS POSSIBLE TO THE NEAREST RIDGE, HIP, OR VALLEY.
4. WORKING CLEARANCES AROUND ALL NEW AND EXISTING ELECTRICAL EQUIPMENT SHALL COMPLY WITH NEC 110.26.
5. DRAWINGS INDICATE THE GENERAL ARRANGEMENT OF SYSTEMS. CONTRACTOR SHALL FURNISH ALL NECESSARY OUTLETS, SUPPORTS, FITTINGS AND ACCESSORIES TO FULFILL APPLICABLE CODES AND STANDARDS.
6. WHERE SIZES OF SOLADECK, RACEWAYS, AND CONDUITS ARE NOT SPECIFIED, THE CONTRACTOR SHALL SIZE THEM ACCORDINGLY.
7. ALL WIRE TERMINATIONS SHALL BE APPROPRIATELY LABELED AND READILY VISIBLE.
8. MODULE GROUNDING CLIPS TO BE INSTALLED BETWEEN MODULE FRAME AND MODULE SUPPORT RAIL, PER THE GROUNDING CLIP MANUFACTURER'S INSTRUCTION.
9. MODULE SUPPORT RAIL TO BE BONDED TO CONTINUOUS COPPER G.E.C. VIA WEEB LUG OR ILSCO GBL-4DBT LAY-IN LUG.
10. TEMPERATURE RATINGS OF ALL CONDUCTORS, TERMINATIONS, BREAKERS, OR OTHER DEVICES ASSOCIATED WITH THE SOLAR PV SYSTEM SHALL BE RATED FOR AT LEAST 75 DEGREE C.

ADT Solar
22171 MCH RD
MANDEVILLE, LA 70471
PHONE: 9152011490

REVISIONS

DESCRIPTION	DATE	REV
INITIAL DESIGN	06/13/2022	

DATE: 06/13/2022

PROJECT NAME & ADDRESS

CRYSTAL MONTELEONE RESIDENCE

504 NORTHWEST MAIN STREET, LEES SUMMIT, MO 64063

SHEET NAME

WIRING CALCULATIONS

SHEET SIZE

ANSI B
11" X 17"

SHEET NUMBER

PV-7

CAUTION:
AUTHORIZED SOLAR
PERSONNEL ONLY!

LABEL-1:
LABEL LOCATION:
AC DISCONNECT

⚠ WARNING

ELECTRICAL SHOCK HAZARD

TERMINALS ON THE LINE AND LOAD SIDES MAY BE ENERGIZED IN THE OPEN POSITION

LABEL- 2:
LABEL LOCATION:
AC DISCONNECT
COMBINER
MAIN SERVICE PANEL
SUBPANEL
MAIN SERVICE DISCONNECT
CODE REF: NEC 690.13(B)

⚠WARNING **DUAL POWER SOURCE**
SECOND SOURCE IS PHOTOVOLTAIC SYSTEM

LABEL- 3:
LABEL LOCATION:
PRODUCTION METER
UTILITY METER
MAIN SERVICE PANEL
SUBPANEL
CODE REF: NEC 705.12(C) & NEC 690.59

⚠ WARNING

TURN OFF PHOTOVOLTAIC AC DISCONNECT PRIOR TO WORKING INSIDE PANEL

LABEL- 4:
LABEL LOCATION:
MAIN SERVICE PANEL
SUBPANEL
MAIN SERVICE DISCONNECT
COMBINER
CODE REF: NEC 110.27(C) & OSHA 1910.145 (f) (7)

⚠ CAUTION
PHOTOVOLTAIC SYSTEM CIRCUIT IS BACKFEED

LABEL- 5:
LABEL LOCATION:
MAIN SERVICE PANEL (ONLY IF SOLAR IS BACK-FED)
SUBPANEL (ONLY IF SOLAR IS BACK-FED)
CODE REF: NEC 705.12(D) & NEC 690.59

⚠ WARNING

POWER SOURCE OUTPUT CONNECTION. DO NOT RELOCATE THIS OVERCURRENT DEVICE

LABEL- 6:
LABEL LOCATION:
MAIN SERVICE PANEL (ONLY IF SOLAR IS BACK-FED)
SUBPANEL (ONLY IF SOLAR IS BACK-FED)
CODE REF: NEC 705.12(B)(3)(2)

SOLAR PV SYSTEM EQUIPPED WITH RAPID SHUTDOWN

TURN RAPID SHUTDOWN SWITCH TO THE "OFF" POSITION TO SHUT DOWN PV SYSTEM AND REDUCE SHOCK HAZARD IN THE ARRAY

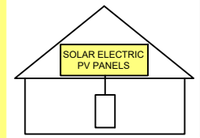

LABEL- 7:
LABEL LOCATION:
AC DISCONNECT
CODE REF: IFC 605.11.3.1(1) & NEC 690.56(C)

RAPID SHUTDOWN SWITCH FOR SOLAR PV SYSTEM

LABEL- 8:
LABEL LOCATION:
AC DISCONNECT
CODE REF: NEC 690.56(C)(2)

P H O T O V O L T A I C

A C D I S C O N N E C T

LABEL- 9:
LABEL LOCATION:
AC DISCONNECT
CODE REF: NEC 690.13(B)

PHOTOVOLTAIC AC DISCONNECT

NOMINAL OPERATING AC VOLATGE	**240 V**
RATED AC OUTPUT CURRENT	**27.83 A**

LABEL- 10:
LABEL LOCATION:
MAIN SERVICE PANEL
SUBPANEL
AC DISCONNECT
CODE REF: NEC 690.54

MAIN PHOTOVOLTAIC SYSTEM DISCONNECT

LABEL- 11:
LABEL LOCATION:
MAIN SERVICE DISCONNECT (ONLY IF MAIN SERVICE DISCONNECT IS PRESENT)
CODE REF: NEC 690.13(B)

ADT Solar
22171 MCH RD
MANDEVILLE, LA 70471
PHONE: 9152011490

REVISIONS

DESCRIPTION	DATE	REV
INITIAL DESIGN	06/13/2022	

DATE: 06/13/2022

PROJECT NAME & ADDRESS

CRYSTAL MONTELEONE RESIDENCE

504 NORTHWEST MAIN STREET, LEES SUMMIT, MO 64063

SHEET NAME
LABELS

SHEET SIZE
ANSI B
11" X 17"

SHEET NUMBER
PV-8

CAUTION

MULTIPLE SOURCES OF POWER

POWER TO THIS BUILDING IS ALSO SUPPLIED FROM THE FOLLOWING SOURCES WITH DISCONNECTING MEANS LOCATED AS SHOWN:

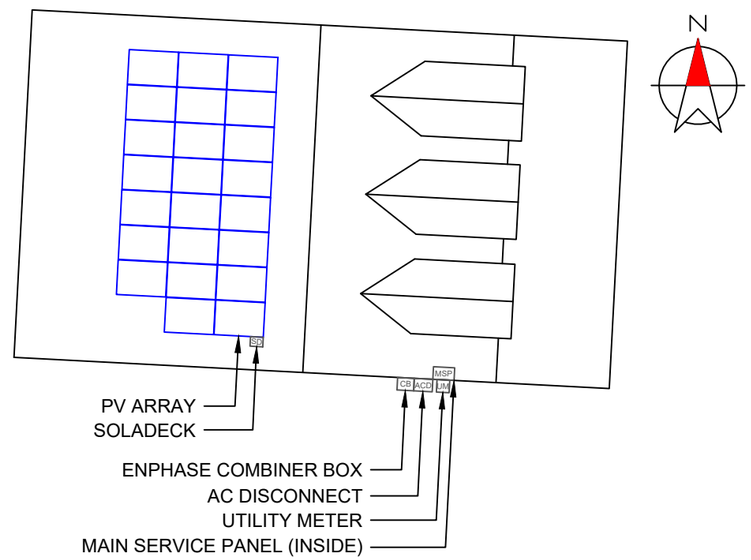

504 NORTHWEST MAIN STREET, LEES SUMMIT, MO 64063

DIRECTORY

PERMANENT PLAQUE OR DIRECTORY PROVIDING THE LOCATION OF THE SERVICE DISCONNECTING MEANS AND THE PHOTOVOLTAIC SYSTEM.

(ALL PLAQUES AND SIGNAGE WILL BE INSTALLED AS OUTLINED WITHIN: NEC 690.56(B)&(C), [NEC 705.10])

LABELING NOTES:

1. LABELS CALLED OUT ACCORDING TO ALL COMMON CONFIGURATIONS. ELECTRICIAN TO DETERMINE EXACT REQUIREMENTS IN THE FIELD PER CURRENT NEC AND LOCAL CODES AND MAKE APPROPRIATE ADJUSTMENTS.
2. LABELING REQUIREMENTS BASED ON THE 2017 NATIONAL ELECTRIC CODE, OSHA STANDARD 19010.145, ANSI Z535.
3. MATERIAL BASED ON THE REQUIREMENTS OF THE AUTHORITY HAVING JURISDICTION.
4. LABELS TO BE OF SUFFICIENT DURABILITY TO WITHSTAND THE ENVIRONMENT INVOLVED [NEC 110.21]
5. LABELS TO BE A MINIMUM LETTER HEIGHT OF 3/8", WHITE ON RED BACKGROUND; REFLECTIVE, AND PERMANENTLY AFFIXED [IFC 605.11.1.1]

ADT Solar

22171 MCH RD
MANDEVILLE, LA 70471
PHONE: 9152011490

REVISIONS

DESCRIPTION	DATE	REV
INITIAL DESIGN	06/13/2022	

DATE: 06/13/2022

PROJECT NAME & ADDRESS

CRYSTAL MONTELEONE RESIDENCE

504 NORTHWEST MAIN STREET, LEES SUMMIT, MO 64063

SHEET NAME

PLACARD

SHEET SIZE

ANSI B
11" X 17"

SHEET NUMBER

PV-9

MICRO INVERTER CHART

	1-10	11-20	21-30	31-40	41-50	51-60	61-70
1							
2							
3							
4							
5							
6							
7							
8							
9							
10							

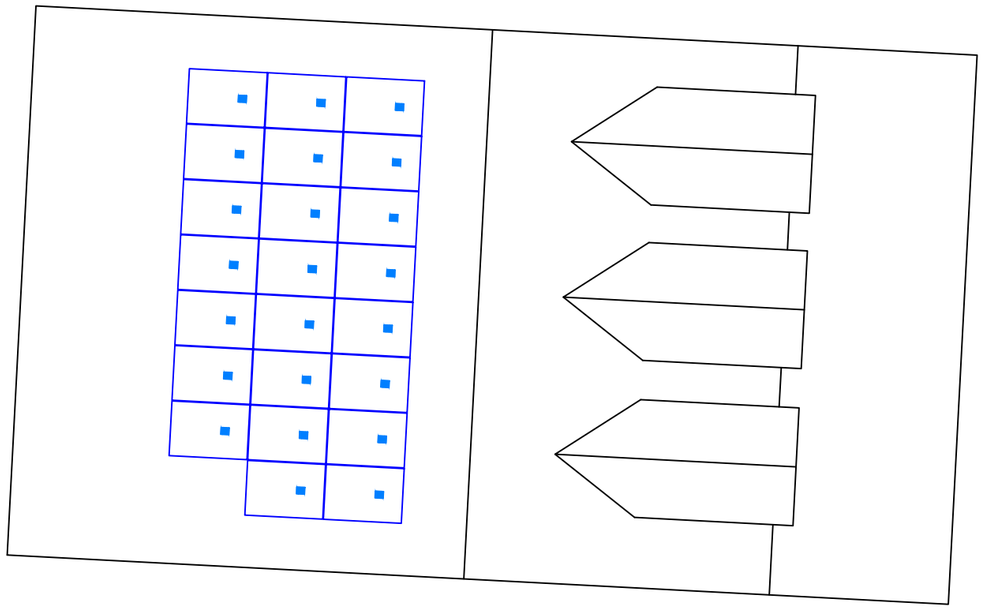

ADT Solar

22171 MCH RD
MANDEVILLE, LA 70471
PHONE: 9152011490

REVISIONS		
DESCRIPTION	DATE	REV
INITIAL DESIGN	06/13/2022	

DATE: 06/13/2022

PROJECT NAME & ADDRESS

CRYSTAL MONTELEONE RESIDENCE

504 NORTHWEST MAIN STREET, LEES SUMMIT, MO 64063

SHEET NAME

MICRO INVERTER CHART

SHEET SIZE

ANSI B
11" X 17"

SHEET NUMBER

PV-10

powered by Q.ANTUM DUO Z

Q.PEAK DUO BLK-G10+ 360-380

ENDURING HIGH PERFORMANCE

Quality Controlled PV
TÜVRheinland CERTIFIED
www.tuv.com ID 1111232615

ASSEMBLED IN THE USA
25 YR Warranty Product & Performance
Q CELLS Yield Security
EUPD RESEARCH TOP BRAND PV MODULES EUROPE 2021

6 BUSBAR CELL TECHNOLOGY

BREAKING THE 21% EFFICIENCY BARRIER
Q.ANTUM DUO Z Technology with zero gap cell layout boosts module efficiency up to 20.9%.

THE MOST THOROUGH TESTING PROGRAMME IN THE INDUSTRY
Q CELLS is the first solar module manufacturer to pass the most comprehensive quality programme in the industry: The new "Quality Controlled PV" of the independent certification institute TÜV Rheinland.

INNOVATIVE ALL-WEATHER TECHNOLOGY
Optimal yields, whatever the weather with excellent low-light and temperature behaviour.

ENDURING HIGH PERFORMANCE
Long-term yield security with Anti LID Technology, Anti PID Technology[1], Hot-Spot Protect and Traceable Quality Tra.Q™.

EXTREME WEATHER RATING
High-tech aluminium alloy frame, certified for high snow (5400 Pa) and wind loads (4000 Pa).

A RELIABLE INVESTMENT
Inclusive 25-year product warranty and 25-year linear performance warranty[2].

[1] APT test conditions according to IEC/TS 62804-1:2015, method A (−1500 V, 96 h)
[2] See data sheet on rear for further information.

THE IDEAL SOLUTION FOR:
Rooftop arrays on residential buildings

Engineered in Germany

Q CELLS

MECHANICAL SPECIFICATIONS

Format	67.6 in × 41.1 in × 1.26 in (including frame) (1717 mm × 1045 mm × 32 mm)
Weight	43.8 lbs (19.9 kg)
Front Cover	0.13 in (3.2 mm) thermally pre-stressed glass with anti-reflection technology
Back Cover	Composite film
Frame	Black anodized aluminum
Cell	6 × 20 monocrystalline Q.ANTUM solar half cells
Junction Box	2.09-3.98 × 1.26-2.36 × 0.59-0.71 in (53-101 × 32-60 × 15-18 mm), Protection class IP67, with bypass diodes
Cable	4 mm² Solar cable; (+) ≥ 45.3 in (1150 mm), (−) ≥ 45.3 in (1150 mm)
Connector	Stäubli MC4; IP68

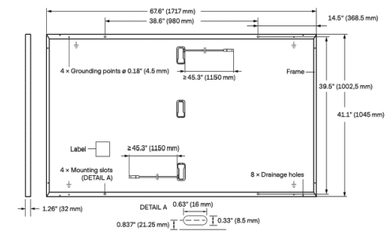

ELECTRICAL CHARACTERISTICS

POWER CLASS				350	355	360	365	370
MINIMUM PERFORMANCE AT STANDARD TEST CONDITIONS, STC[1] (POWER TOLERANCE +5 W / −0 W)								
Minimum	Power at MPP[1]	P_{MPP}	[W]	350	355	360	365	370
	Short Circuit Current[1]	I_{SC}	[A]	10.97	11.00	11.04	11.07	11.10
	Open Circuit Voltage[1]	V_{OC}	[V]	41.11	41.14	41.18	41.21	41.24
	Current at MPP	I_{MPP}	[A]	10.37	10.43	10.49	10.56	10.62
	Voltage at MPP	V_{MPP}	[V]	33.76	34.03	34.31	34.58	34.84
	Efficiency[1]	η	[%]	≥19.5	≥19.8	≥20.1	≥20.3	≥20.6
MINIMUM PERFORMANCE AT NORMAL OPERATING CONDITIONS, NMOT[2]								
Minimum	Power at MPP	P_{MPP}	[W]	262.6	266.3	270.1	273.8	277.6
	Short Circuit Current	I_{SC}	[A]	8.84	8.87	8.89	8.92	8.95
	Open Circuit Voltage	V_{OC}	[V]	38.77	38.80	38.83	38.86	38.90
	Current at MPP	I_{MPP}	[A]	8.14	8.20	8.26	8.31	8.37
	Voltage at MPP	V_{MPP}	[V]	32.24	32.48	32.71	32.94	33.17

[1] Measurement tolerances P_{MPP} ±3%; I_{SC}; V_{OC} ±5% at STC: 1000 W/m², 25±2 °C, AM 1.5 according to IEC 60904-3 • [2] 800 W/m², NMOT, spectrum AM 1.5

Q CELLS PERFORMANCE WARRANTY

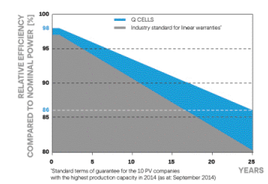

At least 98% of nominal power during first year. Thereafter max. 0.5% degradation per year. At least 93.5% of nominal power up to 10 years. At least 86% of nominal power up to 25 years.

All data within measurement tolerances. Full warranties in accordance with the warranty terms of the Q CELLS sales organisation of your respective country.

PERFORMANCE AT LOW IRRADIANCE

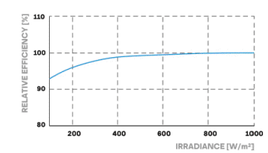

Typical module performance under low irradiance conditions in comparison to STC conditions (25 °C, 1000 W/m²).

TEMPERATURE COEFFICIENTS

Temperature Coefficient of I_{SC}	α	[%/K]	+0.04	Temperature Coefficient of V_{OC}	β	[%/K]	−0.27
Temperature Coefficient of P_{MPP}	γ	[%/K]	−0.35	Nominal Module Operating Temperature	NMOT	[°F]	109±5.4 (43±3 °C)

PROPERTIES FOR SYSTEM DESIGN

Maximum System Voltage V_{SYS}	[V]	1000 (IEC) / 1000 (UL)	PV module classification	Class II
Maximum Series Fuse Rating	[A DC]	20	Fire Rating based on ANSI / UL 61730	TYPE 2
Max. Design Load, Push / Pull[3]	[lbs / ft²]	75 (3600 Pa) / 55 (2660 Pa)	Permitted Module Temperature on Continuous Duty	−40 °F up to +185 °F (−40 °C up to +85 °C)
Max. Test Load, Push / Pull[3]	[lbs / ft²]	113 (5400 Pa) / 84 (4000 Pa)		

[3] See Installation Manual

QUALIFICATIONS AND CERTIFICATES

Quality Controlled PV - TÜV Rheinland; IEC 61215:2016; IEC 61730:2016. This data sheet complies with DIN EN 50380.

C Certified US UL 61730 · CE · TÜVRheinland CERTIFIED www.tuv.com ID 1111220277

Hanwha Q CELLS America Inc.
400 Spectrum Center Drive, Suite 1400, Irvine, CA 92618, USA | TEL +1 949 748 59 96 | EMAIL inquiry@us.q-cells.com | WEB www.q-cells.us

ADT Solar

22171 MCH RD
MANDEVILLE, LA 70471
PHONE: 9152011490

REVISIONS		
DESCRIPTION	DATE	REV
INITIAL DESIGN	06/13/2022	

DATE: 06/13/2022

PROJECT NAME & ADDRESS
CRYSTAL MONTELEONE RESIDENCE
504 NORTHWEST MAIN STREET, LEES SUMMIT, MO 64063

SHEET NAME
EQUIPMENT SPECIFICATION

SHEET SIZE
ANSI B
11" X 17"

SHEET NUMBER
PV-11

ENPHASE

DATA SHEET

IQ8 and IQ8+ Microinverters

Our newest IQ8 Microinverters are the industry's first microgrid-forming, software-defined microinverters with split-phase power conversion capability to convert DC power to AC power efficiently. The brain of the semiconductor-based microinverter is our proprietary application-specific integrated circuit (ASIC) which enables the microinverter to operate in grid-tied or off-grid modes. This chip is built in advanced 55nm technology with high speed digital logic and has super-fast response times to changing loads and grid events, alleviating constraints on battery sizing for home energy systems.

Part of the Enphase Energy System, IQ8 Series Microinverters integrate with the Enphase IQ Battery, Enphase IQ Gateway, and the Enphase App monitoring and analysis software.

Enphase 25 year limited warranty

IQ8 Series Microinverters redefine reliability standards with more than one million cumulative hours of power-on testing, enabling an industry-leading limited warranty of up to 25 years.

Connect PV modules quickly and easily to IQ8 Series Microinverters using the included Q-DCC-2 adapter cable with plug-n-play MC4 connectors.

UL CERTIFIED SAFETY

IQ8 Series Microinverters are UL Listed as PV Rapid Shut Down Equipment and conform with various regulations, when installed according to manufacturer's instructions.

Easy to install

- Lightweight and compact with plug-n-play connectors
- Power Line Communication (PLC) between components
- Faster installation with simple two-wire cabling

High productivity and reliability

- Produce power even when the grid is down*
- More than one million cumulative hours of testing
- Class II double-insulated enclosure
- Optimized for the latest high-powered PV modules

Microgrid-forming

- Complies with the latest advanced grid support**
- Remote automatic updates for the latest grid requirements
- Configurable to support a wide range of grid profiles
- Meets CA Rule 21 (UL 1741-SA) requirements

IQ8SP-DS-0002-01-EN-US-2022-03-17

* Only when installed with IQ System Controller 2, meets UL 1741.
** IQ8 and IQ8Plus supports split phase, 240V installations only.

IQ8 and IQ8+ Microinverters

INPUT DATA (DC)		IQ8-60-2-US	IQ8PLUS-72-2-US
Commonly used module pairings[1]	W	235 – 350	235 – 440
Module compatibility		60-cell/120 half-cell	60-cell/120 half-cell, 66-cell/132 half-cell and 72-cell/144 half-cell
MPPT voltage range	V	27 – 37	29 – 45
Operating range	V	25 – 48	25 – 58
Min/max start voltage	V	30 / 48	30 / 58
Max input DC voltage	V	50	60
Max DC current[2] [module Isc]	A	15	
Overvoltage class DC port		II	
DC port backfeed current	mA	0	
PV array configuration		1x1 Ungrounded array; No additional DC side protection required; AC side protection requires max 20A per branch circuit	
OUTPUT DATA (AC)		**IQ8-60-2-US**	**IQ8PLUS-72-2-US**
Peak output power	VA	245	300
Max continuous output power	VA	240	290
Nominal (L-L) voltage/range[3]	V	240 / 211 – 264	
Max continuous output current	A	1.0	1.21
Nominal frequency	Hz	60	
Extended frequency range	Hz	50 – 68	
AC short circuit fault current over 3 cycles	Arms	2	
Max units per 20 A (L-L) branch circuit[4]		16	13
Total harmonic distortion		<5%	
Overvoltage class AC port		III	
AC port backfeed current	mA	30	
Power factor setting		1.0	
Grid-tied power factor (adjustable)		0.85 leading – 0.85 lagging	
Peak efficiency	%	97.5	97.6
CEC weighted efficiency	%	97	97
Night-time power consumption	mW	60	
MECHANICAL DATA			
Ambient temperature range		-40°C to +60°C (-40°F to +140°F)	
Relative humidity range		4% to 100% (condensing)	
DC Connector type		MC4	
Dimensions (HxWxD)		212 mm (8.3") x 175 mm (6.9") x 30.2 mm (1.2")	
Weight		1.08 kg (2.38 lbs)	
Cooling		Natural convection – no fans	
Approved for wet locations		Yes	
Pollution degree		PD3	
Enclosure		Class II double-insulated, corrosion resistant polymeric enclosure	
Environ. category / UV exposure rating		NEMA Type 6 / outdoor	
COMPLIANCE			
Certifications		CA Rule 21 (UL 1741-SA), UL 62109-1, UL1741/IEEE1547, FCC Part 15 Class B, ICES-0003 Class B, CAN/CSA-C22.2 NO. 107.1-01 This product is UL Listed as PV Rapid Shut Down Equipment and conforms with NEC 2014, NEC 2017, and NEC 2020 section 690.12 and C22.1-2018 Rule 64-218 Rapid Shutdown of PV Systems, for AC and DC conductors, when installed according to manufacturer's instructions.	

(1) No enforced DC/AC ratio. See the compatibility calculator at https://link.enphase.com/module-compatibility
(2) Maximum continuous input DC current is 10.6A (3) Nominal voltage range can be extended beyond nominal if required by the utility. (4) Limits may vary. Refer to local requirements to define the number of microinverters per branch in your area.

IQ8SP-DS-0002-01-EN-US-2022-03-17

ADT Solar
22171 MCH RD
MANDEVILLE, LA 70471
PHONE: 9152011490

REVISIONS

DESCRIPTION	DATE	REV
INITIAL DESIGN	06/13/2022	

DATE: 06/13/2022

PROJECT NAME & ADDRESS

CRYSTAL MONTELEONE RESIDENCE

504 NORTHWEST MAIN STREET, LEES SUMMIT, MO 64063

SHEET NAME
EQUIPMENT SPECIFICATION

SHEET SIZE
ANSI B
11" X 17"

SHEET NUMBER
PV-12

Data Sheet
Enphase Networking

Enphase IQ Combiner 4/4C

X-IQ-AM1-240-4
X-IQ-AM1-240-4C

The **Enphase IQ Combiner 4/4C** with Enphase IQ Gateway and integrated LTE-M1 cell modem (included only with IQ Combiner 4C) consolidates interconnection equipment into a single enclosure and streamlines IQ microinverters and storage installations by providing a consistent, pre-wired solution for residential applications. It offers up to four 2-pole input circuits and Eaton BR series busbar assembly.

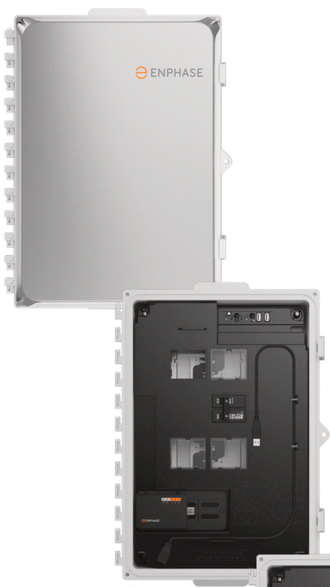

X-IQ-AM1-240-4C

X-IQ-AM1-240-4

Smart

- Includes IQ Gateway for communication and control
- Includes Enphase Mobile Connect cellular modem (CELLMODEM-M1-06-SP-05), included only with IQ Combiner 4C
- Includes solar shield to match Enphase IQ Battery aesthetics and deflect heat
- Flexible networking supports Wi-Fi, Ethernet, or cellular
- Optional AC receptacle available for PLC bridge
- Provides production metering and consumption monitoring

Simple

- Centered mounting brackets support single stud mounting
- Supports bottom, back and side conduit entry
- Up to four 2-pole branch circuits for 240 VAC plug-in breakers (not included)
- 80A total PV or storage branch circuits

Reliable

- Durable NRTL-certified NEMA type 3R enclosure
- Five-year limited warranty
- Two years labor reimbursement program coverage included for both the IQ Combiner SKU's
- UL listed

LISTED

To learn more about Enphase offerings, visit **enphase.com**

ENPHASE.

Enphase IQ Combiner 4/4C

MODEL NUMBER	
IQ Combiner 4 (X-IQ-AM1-240-4)	IQ Combiner 4 with Enphase IQ Gateway printed circuit board for integrated revenue grade PV production metering (ANSI C12.20 +/- 0.5%) and consumption monitoring (+/- 2.5%). Includes a silver solar shield to match the IQ Battery system and IQ System Controller 2 and to deflect heat.
IQ Combiner 4C (X-IQ-AM1-240-4C)	IQ Combiner 4C with Enphase IQ Gateway printed circuit board for integrated revenue grade PV production metering (ANSI C12.20 +/- 0.5%) and consumption monitoring (+/- 2.5%). Includes Enphase Mobile Connect cellular modem (CELLMODEM-M1-06-SP-05), a plug-and-play industrial-grade cell modem for systems up to 60 microinverters. (Available in the US, Canada, Mexico, Puerto Rico, and the US Virgin Islands, where there is adequate cellular service in the installation area.) Includes a silver solar shield to match the IQ Battery and IQ System Controller and to deflect heat.
ACCESSORIES AND REPLACEMENT PARTS	(not included, order separately)
Ensemble Communications Kit COMMS-CELLMODEM-M1-06 CELLMODEM-M1-06-SP-05 CELLMODEM-M1-06-AT-05	- Includes COMMS-KIT-01 and CELLMODEM-M1-06-SP-05 with 5-year Sprint data plan for Ensemble sites - 4G based LTE-M1 cellular modem with 5-year Sprint data plan - 4G based LTE-M1 cellular modem with 5-year AT&T data plan
Circuit Breakers BRK-10A-2-240V BRK-15A-2-240V BRK-20A-2P-240V BRK-15A-2P-240V-B BRK-20A-2P-240V-B	Supports Eaton BR210, BR215, BR220, BR230, BR240, BR250, and BR260 circuit breakers. Circuit breaker, 2 pole, 10A, Eaton BR210 Circuit breaker, 2 pole, 15A, Eaton BR215 Circuit breaker, 2 pole, 20A, Eaton BR220 Circuit breaker, 2 pole, 15A, Eaton BR215B with hold down kit support Circuit breaker, 2 pole, 20A, Eaton BR220B with hold down kit support
EPLC-01	Power line carrier (communication bridge pair), quantity - one pair
XA-SOLARSHIELD-ES	Replacement solar shield for IQ Combiner 4/4C
XA-PLUG-120-3	Accessory receptacle for Power Line Carrier in IQ Combiner 4/4C (required for EPLC-01)
XA-ENV-PCBA-3	Replacement IQ Gateway printed circuit board (PCB) for Combiner 4/4C
X-IQ-NA-HD-125A	Hold down kit for Eaton circuit breaker with screws.
ELECTRICAL SPECIFICATIONS	
Rating	Continuous duty
System voltage	120/240 VAC, 60 Hz
Eaton BR series busbar rating	125 A
Max. continuous current rating	65 A
Max. continuous current rating (input from PV/storage)	64 A
Max. fuse/circuit rating (output)	90 A
Branch circuits (solar and/or storage)	Up to four 2-pole Eaton BR series Distributed Generation (DG) breakers only (not included)
Max. total branch circuit breaker rating (input)	80A of distributed generation / 95A with IQ Gateway breaker included
Envoy breaker	10A or 15A rating GE/Siemens/Eaton included
Production metering CT	200 A solid core pre-installed and wired to IQ Gateway
Consumption monitoring CT (CT-200-SPLIT)	A pair of 200 A split core current transformers
MECHANICAL DATA	
Dimensions (WxHxD)	37.5 x 49.5 x 16.8 cm (14.75" x 19.5" x 6.63"). Height is 21.06" (53.5 cm) with mounting brackets.
Weight	7.5 kg (16.5 lbs)
Ambient temperature range	-40° C to +46° C (-40° to 115° F)
Cooling	Natural convection, plus heat shield
Enclosure environmental rating	Outdoor, NRTL-certified, NEMA type 3R, polycarbonate construction
Wire sizes	• 20 A to 50 A breaker inputs: 14 to 4 AWG copper conductors • 60 A breaker branch input: 4 to 1/0 AWG copper conductors • Main lug combined output: 10 to 2/0 AWG copper conductors • Neutral and ground: 14 to 1/0 copper conductors Always follow local code requirements for conductor sizing.
Altitude	To 2000 meters (6,560 feet)
INTERNET CONNECTION OPTIONS	
Integrated Wi-Fi	802.11b/g/n
Cellular	CELLMODEM-M1-06-SP-05, CELLMODEM-M1-06-AT-05 (4G based LTE-M1 cellular modem). Note that an Enphase Mobile Connect cellular modem is required for all Ensemble installations.
Ethernet	Optional, 802.3, Cat5E (or Cat 6) UTP Ethernet cable (not included)
COMPLIANCE	
Compliance, IQ Combiner	UL 1741, CAN/CSA C22.2 No. 107.1, 47 CFR, Part 15, Class B, ICES 003 Production metering: ANSI C12.20 accuracy class 0.5 (PV production) Consumption metering: accuracy class 2.5
Compliance, IQ Gateway	UL 60601-1/CANCSA 22.2 No. 61010-1

To learn more about Enphase offerings, visit **enphase.com**

ENPHASE.

ADT Solar

22171 MCH RD
MANDEVILLE, LA 70471
PHONE: 9152011490

REVISIONS		
DESCRIPTION	DATE	REV
INITIAL DESIGN	06/13/2022	

DATE: 06/13/2022

PROJECT NAME & ADDRESS

CRYSTAL MONTELEONE RESIDENCE

504 NORTHWEST MAIN STREET, LEES SUMMIT, MO 64063

SHEET NAME
EQUIPMENT SPECIFICATION

SHEET SIZE
ANSI B
11" X 17"

SHEET NUMBER
PV-13

PRO SERIES END CLAMP

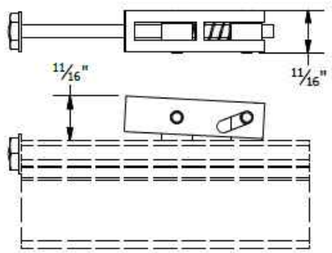

PRO SERIES MID CLAMP

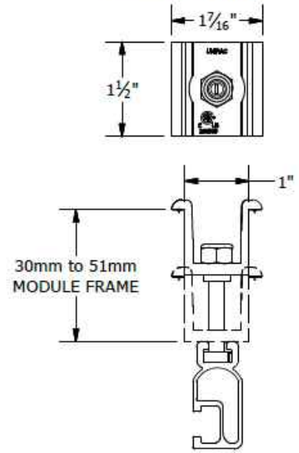

PART # TABLE	
P/N	DESCRIPTION
302035M	ENDCLAMP PRO
302030M	MIDCLAMP PRO - MILL
302030D	MIDCLAMP PRO - DRK

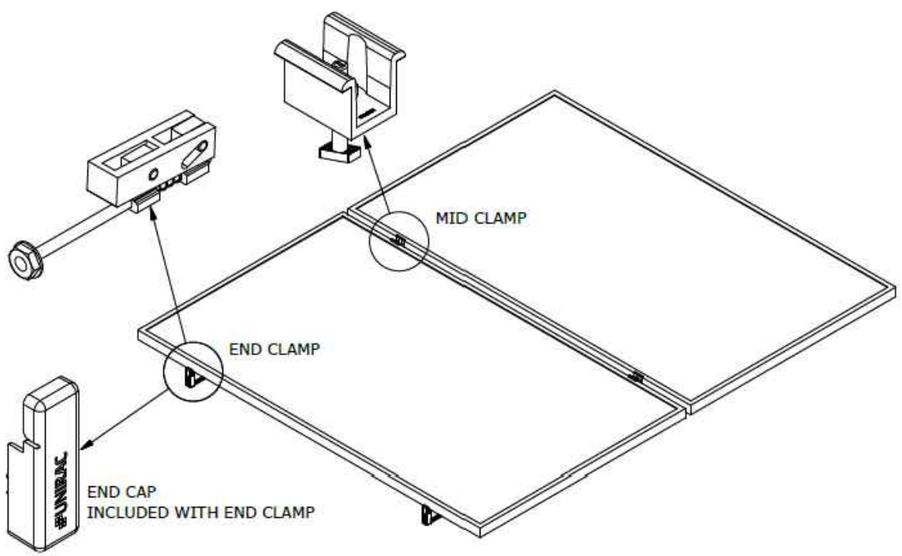

UNIRAC
1411 BROADWAY BLVD. NE
ALBUQUERQUE, NM 87102 USA
PHONE: 505.242.6411
WWW.UNIRAC.COM

PRODUCT LINE:	SOLARMOUNT
DRAWING TYPE:	PART & ASSEMBLY
DESCRIPTION:	PRO SERIES BONDING CLAMPS
REVISION DATE:	10/26/2017

DRAWING NOT TO SCALE
ALL DIMENSIONS ARE NOMINAL

PRODUCT PROTECTED BY ONE OR MORE US PATENTS
LEGAL NOTICE

SM-A01
SHEET

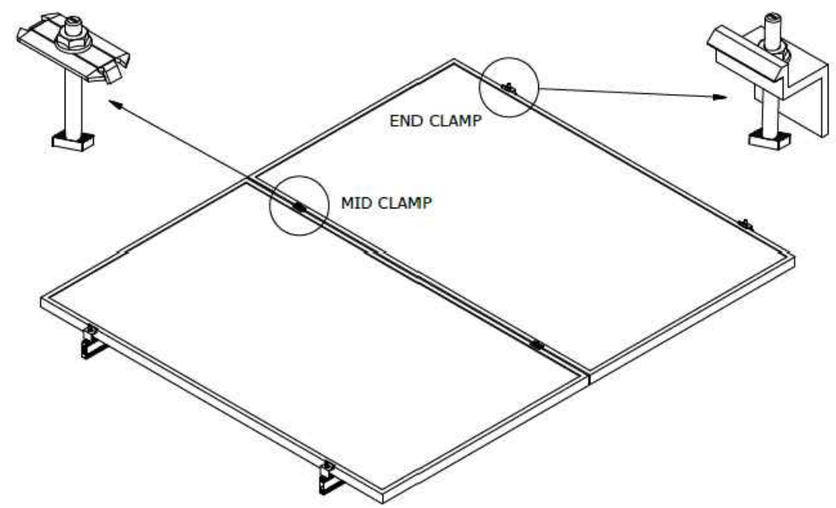

PART # TABLE	
P/N	DESCRIPTION
302027C	SM BND MIDCLAMP BC SS
302027D	SM BND MIDCLAMP BC DRK SS
302028C	SM BND MIDCLAMP EF SS
302028D	SM BND MIDCLAMP EF DRK SS
302029C	SM BND MIDCLAMP DK SS
302029D	SM BND MIDCLAMP DK DRK SS
	FOR BONDING END CLAMP REFER TO SHEET SM-P05

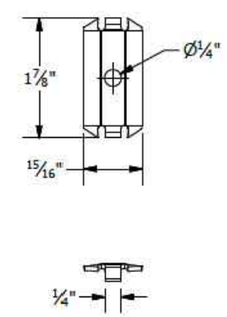

BONDING SM MID CLAMP

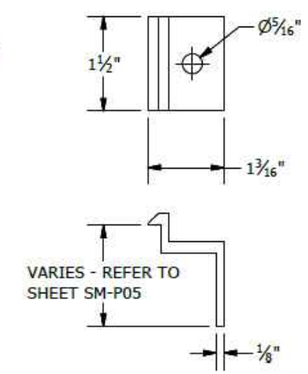

BONDING SM END CLAMP

UNIRAC
1411 BROADWAY BLVD. NE
ALBUQUERQUE, NM 87102 USA
PHONE: 505.242.6411
WWW.UNIRAC.COM

PRODUCT LINE:	SOLARMOUNT
DRAWING TYPE:	PART & ASSEMBLY
DESCRIPTION:	BONDING TOP CLAMPS
REVISION DATE:	10/26/2017

DRAWING NOT TO SCALE
ALL DIMENSIONS ARE NOMINAL

PRODUCT PROTECTED BY ONE OR MORE US PATENTS
LEGAL NOTICE

SM-A01A
SHEET

ADT Solar
22171 MCH RD
MANDEVILLE, LA 70471
PHONE: 9152011490

REVISIONS		
DESCRIPTION	DATE	REV
INITIAL DESIGN	06/13/2022	

DATE: 06/13/2022

PROJECT NAME & ADDRESS
CRYSTAL MONTELEONE RESIDENCE
504 NORTHWEST MAIN STREET,
LEES SUMMIT, MO 64063

SHEET NAME
EQUIPMENT SPECIFICATION

SHEET SIZE
ANSI B
11" X 17"

SHEET NUMBER
PV-14

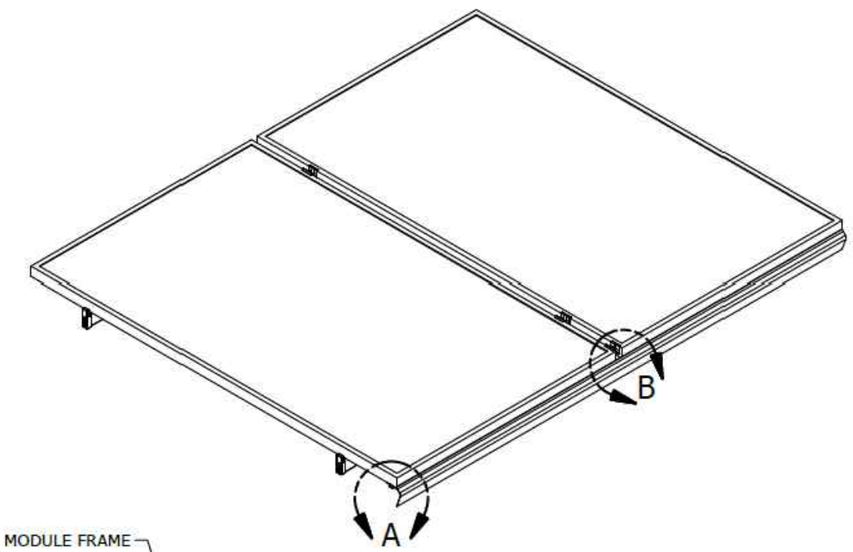

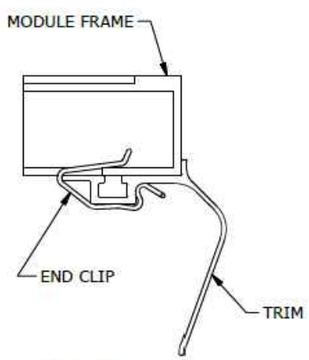

DETAIL A
TRIM END CLIP

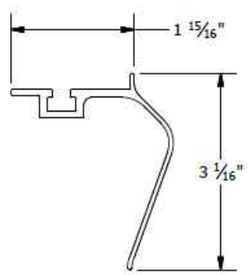

TRIM

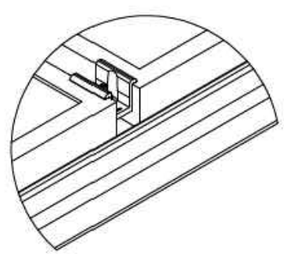

DETAIL B
MID CLAMP TRIM CONNECTION

PART # TABLE		
P/N	DESCRIPTION	LENGTH
206072D-B	SM TRIM DRK	168"
008025S	SM TRIM END CLIP	-

UNIRAC
1411 BROADWAY BLVD. NE
ALBUQUERQUE, NM 87102 USA
PHONE: 505.242.6411
WWW.UNIRAC.COM

PRODUCT LINE:	SOLARMOUNT
DRAWING TYPE:	PART & ASSEMBLY
DESCRIPTION:	SM TRIM END CLIP
REVISION DATE:	9/27/2017

DRAWING NOT TO SCALE
ALL DIMENSIONS ARE NOMINAL

PRODUCT PROTECTED BY ONE OR MORE US PATENTS
LEGAL NOTICE

SM-A02
SHEET

PART TABLE	
P/N	DESCRIPTION
004085M	FLASHLOC COMP KIT MILL, 20 PACK
004085D	FLASHLOC COMP KIT DARK, 20 PACK

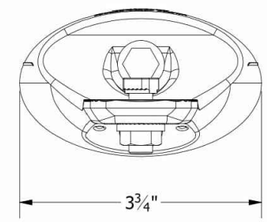

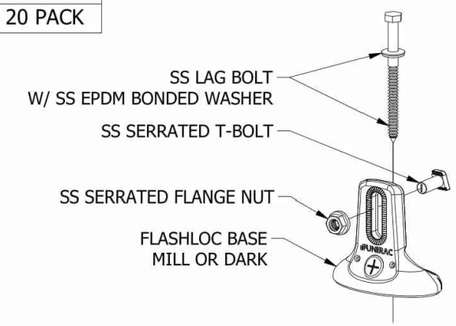

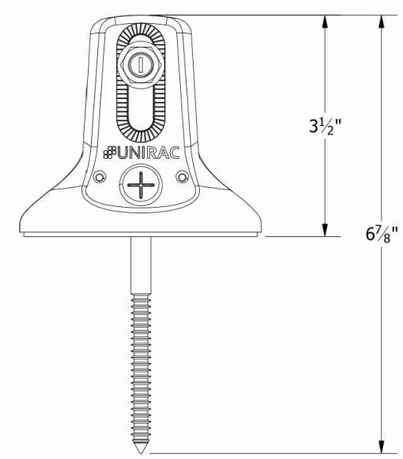

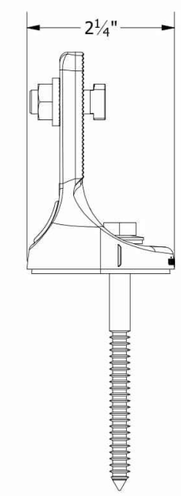

UNIRAC
1411 BROADWAY BLVD. NE
ALBUQUERQUE, NM 87102 USA
PHONE: 505.242.6411
WWW.UNIRAC.COM

PRODUCT LINE:	SOLARMOUNT
DRAWING TYPE:	PART DRAWING
DESCRIPTION:	FLASHLOC COMP KIT
REVISION DATE:	10/3/2019

DRAWING NOT TO SCALE
ALL DIMENSIONS ARE NOMINAL

PRODUCT PROTECTED BY ONE OR MORE US PATENTS
LEGAL NOTICE

FL-A01
SHEET

ADT Solar
22171 MCH RD
MANDEVILLE, LA 70471
PHONE: 9152011490

REVISIONS		
DESCRIPTION	DATE	REV
INITIAL DESIGN	06/13/2022	

DATE: 06/13/2022

PROJECT NAME & ADDRESS
CRYSTAL MONTELEONE RESIDENCE
504 NORTHWEST MAIN STREET,
LEES SUMMIT, MO 64063

SHEET NAME
EQUIPMENT SPECIFICATION

SHEET SIZE
ANSI B
11" X 17"

SHEET NUMBER
PV-15

FLASH LOC

UNIRAC
BETTER SOLAR STARTS HERE

FLASHLOC is the ultimate attachment for composition shingle and rolled comp roofs. The all-in-one mount installs fast — no kneeling on hot roofs to install flashing, no prying or cutting shingles, no pulling nails. Simply drive the lag bolt and inject sealant into the base. **FLASH**LOC's patented TRIPLE SEAL technology preserves the roof and protects the penetration with a permanent pressure seal. Kitted with lag bolts, sealant, and hardware for maximum convenience. Don't just divert water, **LOC it out!**

PROTECT THE ROOF

Install a high-strength waterproof attachment without lifting, prying or damaging shingles.

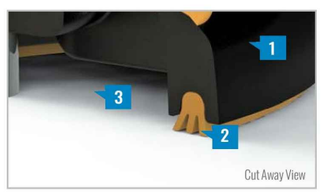

LOC OUT WATER

With an outer shield 1 contour-conforming gasket 2 and pressurized sealant chamber 3 the Triple-Loc Seal delivers a 100% waterproof connection.

HIGH-SPEED INSTALL

Simply drive lag bolt and inject sealant into the port 4 to create a permanent pressure seal.

FASTER INSTALLATION. 25-YEAR WARRANTY.

FOR QUESTIONS OR CUSTOMER SERVICE VISIT UNIRAC.COM OR CALL (505) 248-2702

FLASH LOC

INSTALLATION GUIDE

UNIRAC
BETTER SOLAR STARTS HERE

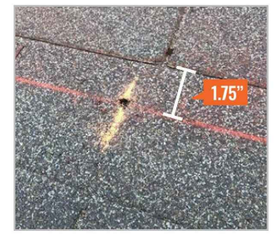

PRE-INSTALL

Snap chalk lines for attachment rows. On shingle roofs, snap lines 1-3/4" below upslope edge of shingle course. Locate rafters and mark attachment locations.

At each location, drill a 7/32" pilot hole. Clean roof surface of dirt, debris, snow, and ice, then fill pilot hole with sealant.

NOTE: Space mounts per racking system install specifications. When down pressure is ≥34 psf, span may not exceed 2 ft.

STEP 1: SECURE

Place **FLASH**LOC over pilot hole with lag on down-slope side. Align indicator marks on sides of mount with chalk line. Pass included lag bolt and sealing washer through **FLASH**LOC into pilot hole. Drive lag bolt until mount is held firmly in place.

NOTE: The EPDM in the sealing washer will expand beyond the edge of the metal washer when proper torque is applied.

STEP 2: SEAL

Insert tip of UNIRAC provided sealant into port. Inject until sealant exits both vents.

Continue array installation, attaching rails to mounts with provided T-bolts.

NOTE: When **FLASH**LOC is installed over gap between shingle or tabs or vertical joints, fill gap/joint with sealant between mount and upslope edge of shingle course.

Use only provided sealant.

FASTER INSTALLATION. 25-YEAR WARRANTY.

FOR QUESTIONS OR CUSTOMER SERVICE VISIT UNIRAC.COM OR CALL (505) 248-2702

ADT Solar
22171 MCH RD
MANDEVILLE, LA 70471
PHONE: 9152011490

REVISIONS		
DESCRIPTION	DATE	REV
INITIAL DESIGN	06/13/2022	

DATE: 06/13/2022

PROJECT NAME & ADDRESS

CRYSTAL MONTELEONE RESIDENCE

504 NORTHWEST MAIN STREET, LEES SUMMIT, MO 64063

SHEET NAME
EQUIPMENT SPECIFICATION

SHEET SIZE
ANSI B
11" X 17"

SHEET NUMBER
PV-16

BONDING SPLICE BAR

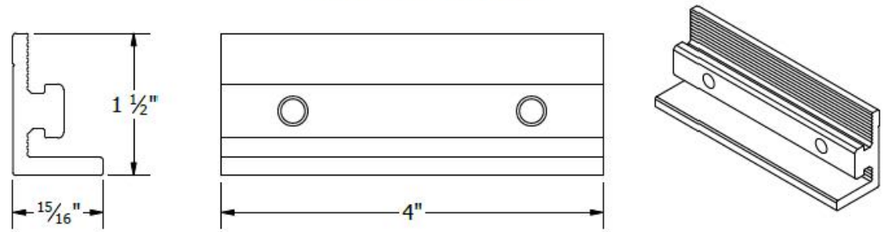

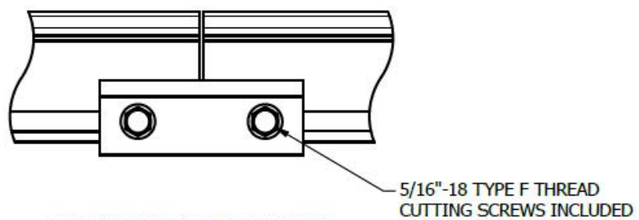

TYPICAL SPLICE BAR DETAIL

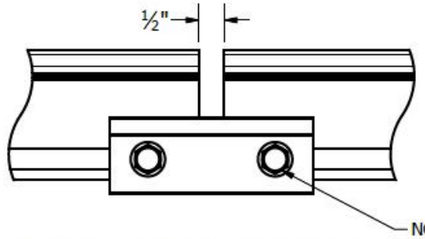

TYPICAL EXPANSION JOINT DETAIL

PART # TABLE	
P/N	DESCRIPTION
303019M	BND SPLICE BAR PRO SERIES MILL
303019D	BND SPLICE BAR PRO SERIES DRK

UNIRAC
1411 BROADWAY BLVD. NE
ALBUQUERQUE, NM 87102 USA
PHONE: 505.242.6411
WWW.UNIRAC.COM

PRODUCT LINE:	SOLARMOUNT
DRAWING TYPE:	PART & ASSEMBLY
DESCRIPTION:	BONDING SPLICE BAR PRO SERIES
REVISION DATE:	8/23/2018

DRAWING NOT TO SCALE
ALL DIMENSIONS ARE NOMINAL

PRODUCT PROTECTED BY ONE OR MORE US PATENTS
LEGAL NOTICE

SM-A05
SHEET

BONDING SPLICE BAR

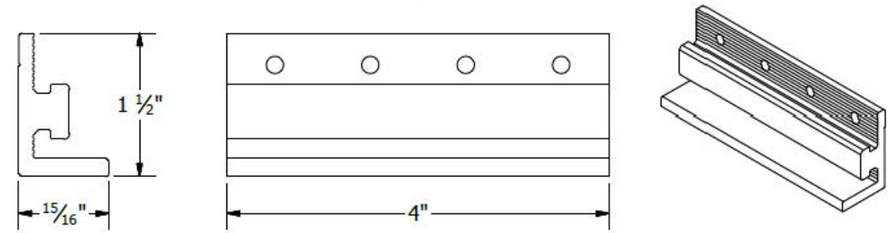

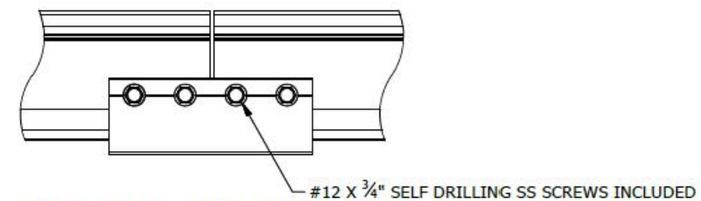

TYPICAL SPLICE BAR DETAIL

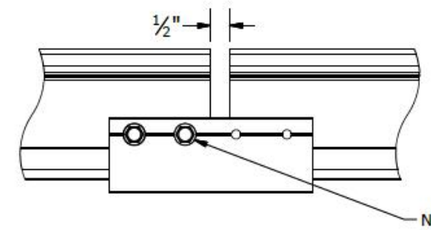

TYPICAL EXPANSION JOINT DETAIL

PART # TABLE	
P/N	DESCRIPTION
303018C	BND SPLICE BAR SERRATED CLR
303018D	BND SPLICE BAR SERRATED DRK

UNIRAC
1411 BROADWAY BLVD. NE
ALBUQUERQUE, NM 87102 USA
PHONE: 505.242.6411
WWW.UNIRAC.COM

PRODUCT LINE:	SOLARMOUNT
DRAWING TYPE:	PART & ASSEMBLY
DESCRIPTION:	BONDING SPLICE BAR
REVISION DATE:	9/27/2017

DRAWING NOT TO SCALE
ALL DIMENSIONS ARE NOMINAL

PRODUCT PROTECTED BY ONE OR MORE US PATENTS
LEGAL NOTICE

SM-A05
SHEET

ADT Solar
22171 MCH RD
MANDEVILLE, LA 70471
PHONE: 9152011490

REVISIONS		
DESCRIPTION	DATE	REV
INITIAL DESIGN	06/13/2022	

DATE: 06/13/2022

PROJECT NAME & ADDRESS
CRYSTAL MONTELEONE RESIDENCE
504 NORTHWEST MAIN STREET,
LEES SUMMIT, MO 64063

SHEET NAME
EQUIPMENT SPECIFICATION

SHEET SIZE
ANSI B
11" X 17"

SHEET NUMBER
PV-17

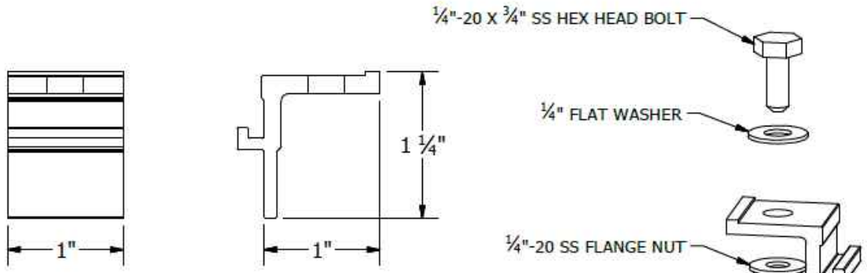

BOTTOM CLIP

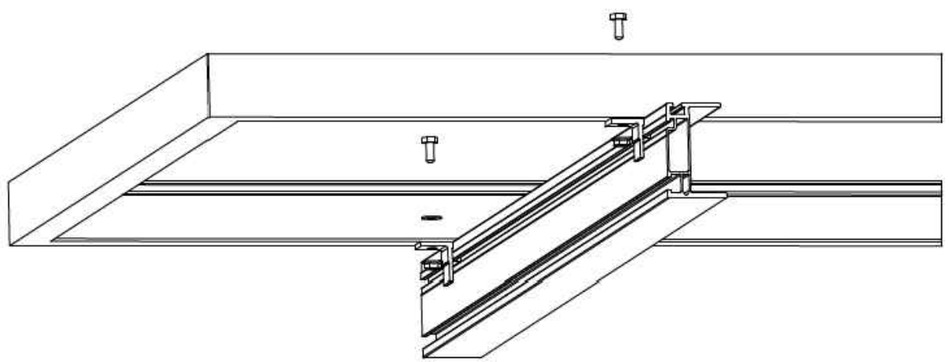

DETAIL A

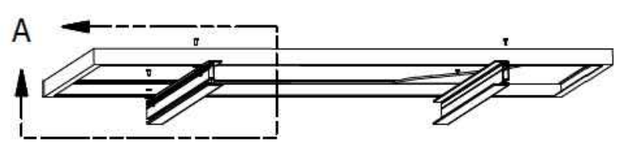

PART # TABLE	
P/N	DESCRIPTION
302000C	SMHD BOTTOM CLIPS W/HDW CLR

UNIRAC
1411 BROADWAY BLVD. NE
ALBUQUERQUE, NM 87102 USA
PHONE: 505.242.6411
WWW.UNIRAC.COM

PRODUCT LINE:	SOLARMOUNT HD
DRAWING TYPE:	PART & ASSEMBLY
DESCRIPTION:	BOTTOM CLIP
REVISION DATE:	9/27/2017

DRAWING NOT TO SCALE
ALL DIMENSIONS ARE NOMINAL

PRODUCT PROTECTED BY ONE OR MORE US PATENTS
LEGAL NOTICE

SM-A10
SHEET

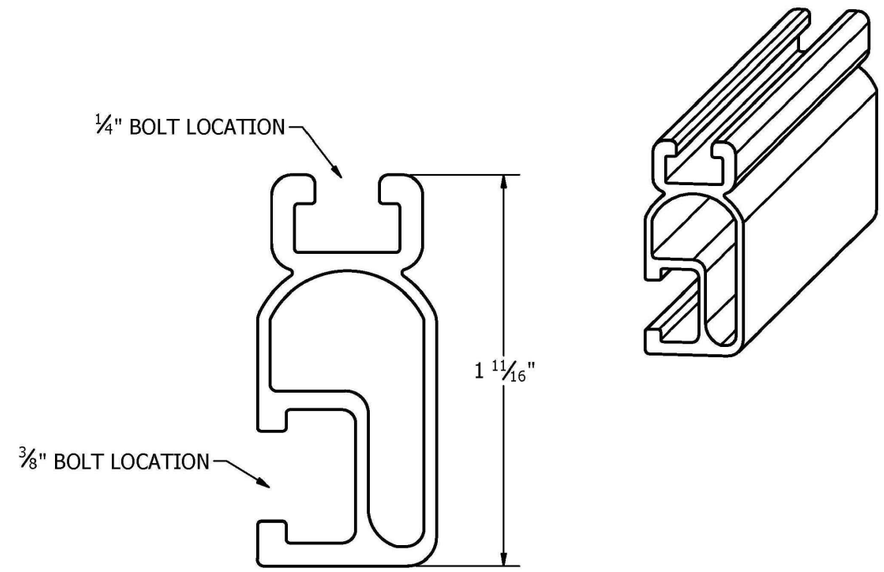

PART # TABLE		
P/N	DESCRIPTION	LENGTH
315168M	SM LIGHT RAIL 168" MILL	168"
315168D	SM LIGHT RAIL 168" DRK	168"
315240M	SM LIGHT RAIL 240" MILL	240"
315240D	SM LIGHT RAIL 240" DRK	240"

UNIRAC
1411 BROADWAY BLVD. NE
ALBUQUERQUE, NM 87102 USA
PHONE: 505.242.6411
WWW.UNIRAC.COM

PRODUCT LINE:	SOLARMOUNT
DRAWING TYPE:	PART DETAIL
DESCRIPTION:	LIGHT RAIL
REVISION DATE:	9/11/2017

DRAWING NOT TO SCALE
ALL DIMENSIONS ARE NOMINAL

PRODUCT PROTECTED BY ONE OR MORE US PATENTS
LEGAL NOTICE

SM-P02
SHEET

ADT Solar
22171 MCH RD
MANDEVILLE, LA 70471
PHONE: 9152011490

REVISIONS		
DESCRIPTION	DATE	REV
INITIAL DESIGN	06/13/2022	

DATE: 06/13/2022

PROJECT NAME & ADDRESS
CRYSTAL MONTELEONE RESIDENCE
504 NORTHWEST MAIN STREET,
LEES SUMMIT, MO 64063

SHEET NAME
EQUIPMENT SPECIFICATION

SHEET SIZE
ANSI B
11" X 17"

SHEET NUMBER
PV-18

NOTES:
1. END CAP INCLUDED WITH EVERY END CLAMP.
2. END CAP FITS SOLARMOUNT LIGHT AND STANDARD RAIL PROFILES.

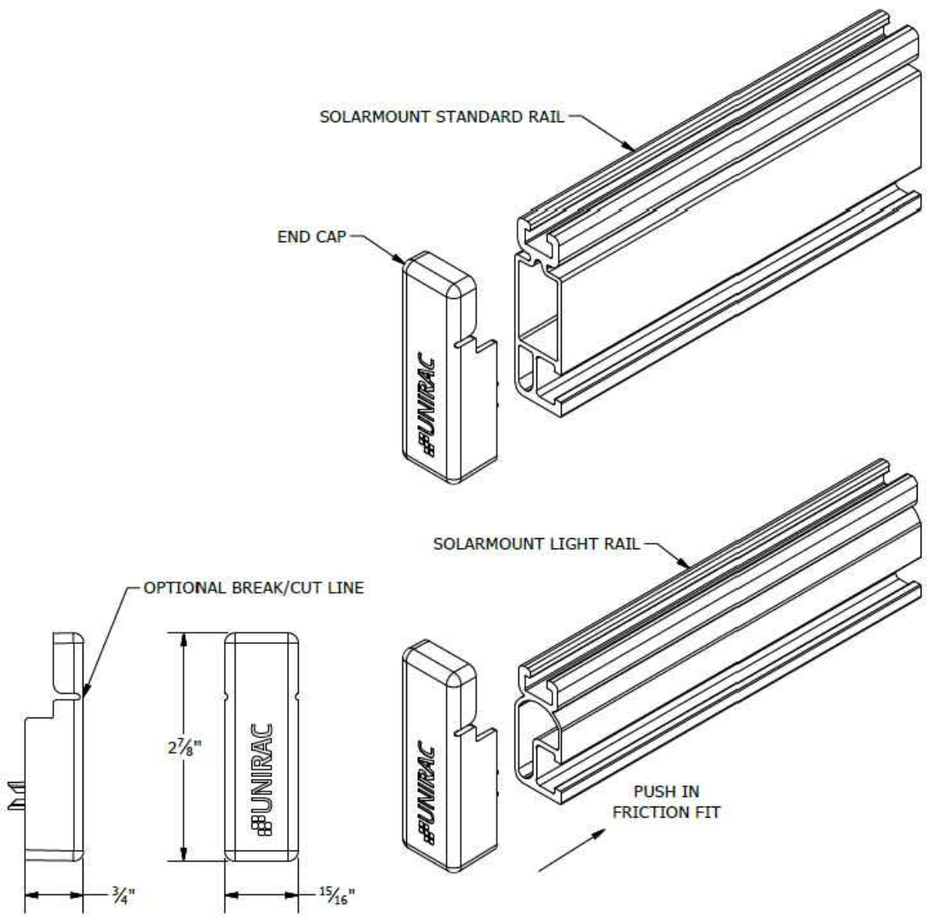

UNIRAC
1411 BROADWAY BLVD. NE
ALBUQUERQUE, NM 87102 USA
PHONE: 505.242.6411
WWW.UNIRAC.COM

PRODUCT LINE:	SOLARMOUNT
DRAWING TYPE:	PART DETAIL
DESCRIPTION:	END CAPS
REVISION DATE:	9/27/2017

DRAWING NOT TO SCALE
ALL DIMENSIONS ARE NOMINAL

PRODUCT PROTECTED BY ONE OR MORE US PATENTS
LEGAL NOTICE

SM-P04
SHEET

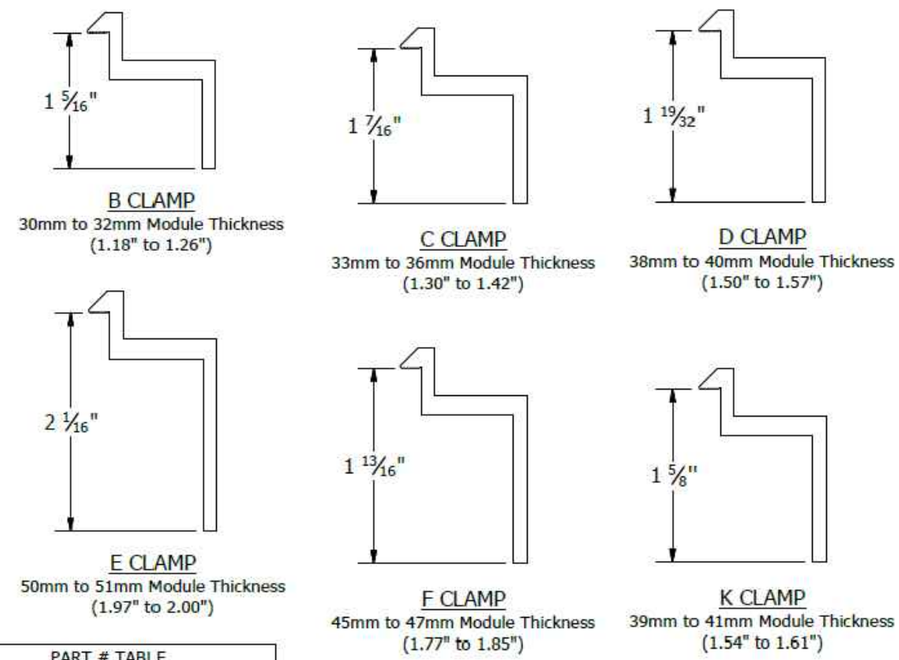

PART # TABLE	
P/N	DESCRIPTION
302021C	SM ENDCLAMP B CLR AL
302021D	SM ENDCLAMP B DRK AL
302022C	SM ENDCLAMP C CLR AL
302022D	SM ENDCLAMP C DRK AL
302023C	SM ENDCLAMP D CLR AL
302023D	SM ENDCLAMP D DRK AL
303024C	SM ENDCLAMP E CLR AL
302024D	SM ENDCLAMP E DRK AL
302025C	SM ENDCLAMP F CLR AL
302025D	SM ENDCLAMP F DRK AL
302026C	SM ENDCLAMP K CLR AL
302026D	SM ENDCLAMP K DRK AL

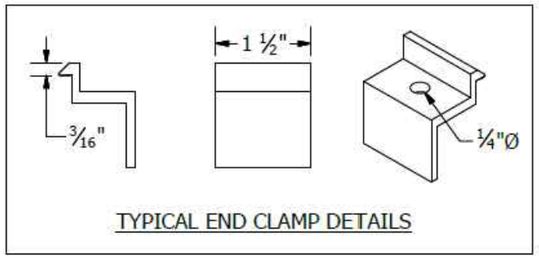

TYPICAL END CLAMP DETAILS

UNIRAC
1411 BROADWAY BLVD. NE
ALBUQUERQUE, NM 87102 USA
PHONE: 505.242.6411
WWW.UNIRAC.COM

PRODUCT LINE:	SOLARMOUNT
DRAWING TYPE:	PART DETAIL
DESCRIPTION:	END CLAMPS - TOP MOUNTING
REVISION DATE:	9/27/2017

DRAWING NOT TO SCALE
ALL DIMENSIONS ARE NOMINAL

PRODUCT PROTECTED BY ONE OR MORE US PATENTS
LEGAL NOTICE

SM-P05
SHEET

ADT Solar
22171 MCH RD
MANDEVILLE, LA 70471
PHONE: 9152011490

REVISIONS		
DESCRIPTION	DATE	REV
INITIAL DESIGN	06/13/2022	

DATE: 06/13/2022

PROJECT NAME & ADDRESS
CRYSTAL MONTELEONE RESIDENCE
504 NORTHWEST MAIN STREET,
LEES SUMMIT, MO 64063

SHEET NAME
EQUIPMENT SPECIFICATION

SHEET SIZE
ANSI B
11" X 17"

SHEET NUMBER
PV-19

SolaDeck

FLASHED PV ROOF-MOUNT COMBINER/ENCLOSURE

Basic Features

- Stamped Seamless Construction
- 18 Gauge Galvanized Steel
- Powder Coated Surfaces
- Flashes into the roof deck
- 3 Roof deck knockouts .5", .75", 1"
- 5 Centering dimples for entry/exit fittings or conduit
- 2 Position Ground lug installed
- Mounting Hardware Included

SolaDeck Model SD 0783

SolaDeck UL50 Type 3R Enclosures

Available Models:
Model SD 0783 - (3" fixed Din Rail)
Model SD 0786 - (6" slotted Din Rail)

SolaDeck UL 1741 Combiner/Enclosures

Models SD 0783-41 and SD 0786-41 are labeled and ETL listed UL STD 1741 according to the UL STD 1741 for photovoltaic combiner enclosures.

Max Rated - 600VDC, 120AMPS

Model SD 0783-41 3" Fixed Din Rail fastened using Norlock System

****Typical System Configuration**

4- Din Rail Mounted Fuse Holders 600VDC 30 AMP
1- Power Distribution Block 600VDC 175AMP
1- Bus Bar with UL lug

Model SD 0786-41 6" Slotted Din Rail fastened using steel studs

****Typical System Configuration**

4- Din Rail Mounted Fuse Holders 600VDC 30 AMP
4- Din Rail Mounted Terminal Blocks
Bus Bars with UL lug

**Fuse holders and terminal blocks added in the field must be UL listed or recognized and meet 600 VDC 30 AMP 110C for fuse holders, 600V 50 AMP 90C for rail mounted terminal blocks and 600 V 175 AMP 90C for Power Distribution Blocks. Use Copper Wire Conductors.

Cover is trimmed to allow conduit or fittings, base is center dimpled for fitting locations.

Model SD 0783-41, wired with Din Rail mounted fuse holders, bus bar and power distribution block.

Model SD 0786-41, wired with Din Rail mounted fuse holders, terminal blocks and bus bars.

RSTC Enterprises, Inc • 2219 Heimstead Road • Eau Claire, WI 54703
For product information call 1(866) 367-7782

ADT Solar
22171 MCH RD
MANDEVILLE, LA 70471
PHONE: 9152011490

REVISIONS		
DESCRIPTION	DATE	REV
INITIAL DESIGN	06/13/2022	

DATE: 06/13/2022

PROJECT NAME & ADDRESS

CRYSTAL MONTELEONE RESIDENCE

504 NORTHWEST MAIN STREET, LEES SUMMIT, MO 64063

SHEET NAME
EQUIPMENT SPECIFICATION

SHEET SIZE
ANSI B
11" X 17"

SHEET NUMBER
PV-20