EVERSTEAD
ENGINEERING & DESIGN

June 6, 2022

Summit Homes
120 SE 30th St.
Lee's Summit, MO 64082

RE: Bracing revision for Lot #85 Hawthorne Ridge –1519 Arbor Valley, Lee's Summit, MO 64082 – Permit # PRRES20213629

<u>Bracing revision to main level rear wall shall be as follows:</u>

- Fasten braced wall panel with 8d fasteners at 6" for panel edges and 12" in field.
- Install blocking @ 3' O.C. vertically, nail blocking at 6" O.C.
- See the image below for the required bracing areas.

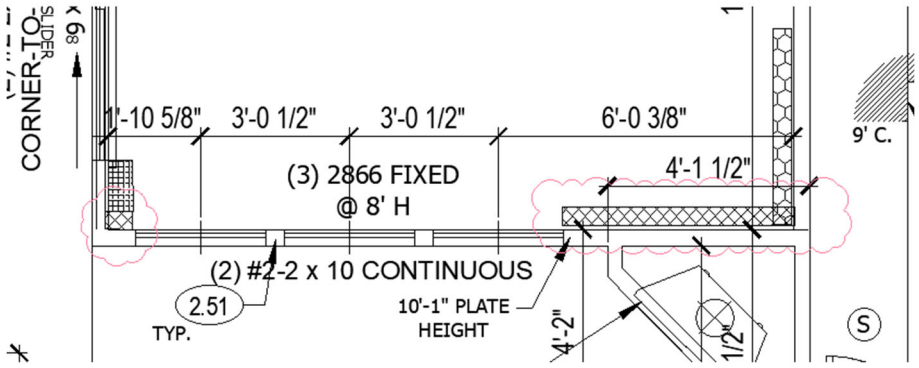

Sincerely,

Bradley Huxol, PE

STATE OF MISSOURI
BRADLEY
HUXOL
NUMBER
PE-2011000903
PROFESSIONAL ENGINEER