GENERAL NOTES:

1. MATERIALS — ASTM DESCRIPTION

STRUCTURAL STEEL PLATE	A529 / A572 / A1011
HOT ROLLED MILL SHAPES	A36 / A529 / A500
HHS ROUND	A500
HHS RECTANGULAR	A500
COLD FORM SHAPES	A653 / A1011
ROOF AND WALL SHEETING	A653 / A792
BOLTS	A307 / A325 / A490
CABLE	A475
RODS	A529 / A572

2. STRUCTURAL PRIMER NOTE:

SHOP COAT PRIMER IS INTENDED TO PROTECT THE STEEL FRAMING FOR A SHORT PERIOD OF TIME. STORAGE IN EXTREME COLD TEMPERATURES OR WINTER SNOW CONDITIONS, INCLUDING TRANSPORTATION ON SALTED OR CHEMICALLY TREATED ROADS WILL ADVERSELY AFFECT THE DURABILITY AND LONGEVITY OF THE PRIMER. THE COAT OF SHOP PRIMER DOES NOT PROVIDE THE UNIFORMITY OF APPEARANCE, OR THE DURABILITY AND CORROSION RESISTANCE OF A FIELD APPLIED FINISH COAT OF PAINT OVER A SHOP PRIMER. MINOR ABRASIONS TO THE SHOP COAT PRIMER CAUSED BY HANDLING, LOADING, SHIPPING, UNLOADING AND ERECTION ARE UNAVOIDABLE AND ARE NOT THE RESPONSIBILITY OF THE METAL BUILDING MANUFACTURER. METAL BUILDING MANUFACTURER IS NOT RESPONSIBLE FOR THE DETERIORATION OF THE PRIMER OR CORROSION THAT MAY RESULT FROM ATMOSPHERIC AND ENVIRONMENTAL CONDITIONS NOR THE COMPATIBILITY OF THE PRIMER TO ANY FIELD APPLIED COATING.

3. BUILDING ERECTION NOTES:

THE GENERAL CONTRACTOR AND/OR ERECTOR IS RESPONSIBLE TO SAFELY AND PROPERLY ERECT THE METAL BUILDING SYSTEM IN CONFORMANCE WITH THESE DRAWINGS, OSHA REQUIREMENTS, AND EITHER MBMA OR CSA S16 STANDARDS PERTAINING TO PROPER ERECTION. TEMPORARY SUPPORTS SUCH AS GUYS, BRACES, FALSEWORK, CRIBBING OR OTHER ELEMENTS FOR ERECTION ARE TO BE DETERMINED, FURNISHED AND INSTALLED BY THE ERECTOR. THESE SUPPORTS MUST SECURE THE STEEL FRAMING, OR PARTLY ASSEMBLED STEEL FRAMING, AGAINST LOADS COMPARABLE IN INTENSITY TO THOSE FOR WHICH THE STRUCTURE WAS DESIGNED IN ADDITION TO LOADS RESULTING FROM THE ERECTION OPERATION. SECONDARY WALL AND ROOF FRAMING (PURLINS, GIRTS AND/OR JOIST) ARE NOT DESIGNED TO FUNCTION AS A WORKING PLATFORM OR TO PROVIDE AS AN ANCHORAGE POINT FOR A FALL ARREST /SAFETY TIE OFF.

4. SPECIAL INSPECTION:

SPECIAL INSPECTIONS AND TESTING THAT MAY BE REQUIRED BY GOVERNMENTAL OR OTHER AUTHORITY DURING CONSTRUCTION AND/OR STEEL FABRICATION (COLLECTIVELY, "INSPECTIONS") ARE NOT THE RESPONSIBILITY OF THE PEMB MANUFACTURER, AND TO THE EXTENT REQUIRED IT SHALL BE THE RESPONSIBILITY OF THE OWNER AND/OR THE OWNER'S REPRESENTITIVE. IN THE EVENT INSPECTIONS ARE REQUIRED, THE OWNER AND/OR THE OWNER'S REPRESENTITIVE SHALL EMPLOY A THIRD PARTY QUALITY ASSURANCE TESTING AGENCY APPROVED BY THE RELEVANT AUTHORITY. IF SUCH REQUIREMENTS ARE NOT SPECIFICALLY INCLUDED IN THE PEMB MANUFACTURER'S SALES DOCUMENTS, NO INSPECTIONS BY THE PEMB MANUFACTURER OR AT THE PEMB MANUFACTURER'S FACILITY SHALL BE MADE. THE PEMB MANUFACTURER'S FACILITIES ARE ACCREDITED BY IAS AC472.

5. A325 & A490 BOLT TIGHTENING REQUIREMENTS:

IT IS THE RESPONSIBILITY OF THE ERECTOR TO ENSURE PROPER BOLT TIGHTNESS IN ACCORDANCE WITH APPLICABLE REGULATIONS. FOR PROJECTS IN THE UNITED STATES, SEE THE RCSC SPECIFICATION FOR STRUCTURAL JOINTS USING A325 OR A490 BOLTS OR FOR PROJECTS IN CANADA, SEE THE CAN/CSA S16 LIMIT STATES DESIGN OF STEEL STRUCTURES FOR MORE INFORMATION.

THE FOLLOWING CRITERIA MAY BE USED TO DETERMINE THE BOLT TIGHTNESS (I.E., "SNUG-TIGHT" OR "FULLY-PRETENSIONED"), UNLESS REQUIRED OTHERWISE BY LOCAL JURISDICTION OR CONTRACT REQUIREMENTS:

A) ALL A490 BOLTS SHALL BE "FULLY-PRETENSIONED".
B) ALL A325 BOLTS IN PRIMARY FRAMING (RIGID FRAMES AND BRACING) MAY BE "SNUG-TIGHT", EXCEPT AS FOLLOWS: "FULLY-PRETENSION" A325 BOLTS IF:
   a) BUILDING SUPPORTS A CRANE SYSTEM WITH A CAPACITY GREATER THAN 5 TONS.
   b) BUILDING SUPPORTS MACHINERY THAT CREATES VIBRATION, IMPACT, OR STRESS-REVERSALS ON THE CONNECTIONS. THE ENGINEER-OF-RECORD FOR THE PROJECT SHOULD BE CONSULTED TO EVALUATE FOR THIS CONDITION.
   c) THE PROJECT SITE IS LOCATED IN A HIGH SEISMIC AREA. FOR IBC-BASED CODES, "HIGH SEISMIC AREA" IS DEFINED AS "SEISMIC DESIGN CATEGORY" OF 'D', 'E', OR 'F'. SEE THE "BUILDING LOADS" SECTION ON THIS PAGE FOR THE DEFINED SEISMIC DESIGN CATEGORY FOR THIS PROJECT.
   d) ANY CONNECTION DESIGNATED IN THESE DRAWINGS AS "A325-SC". "SLIP-CRITICAL (SC)" CONNECTIONS MUST BE FREE OF PAINT, OIL, OR OTHER MATERIALS THAT REDUCE FRICTION AT CONTACT SURFACES. GALVANIZED OR LIGHTLY-RUSTED SURFACES ARE ACCEPTABLE.
C) IN CANADA, ALL A325 AND A490 BOLTS SHALL BE "FULLY-PRETENSIONED", EXCEPT FOR SECONDARY MEMBERS (PURLINS, GIRTS, OPENING FRAMING, ETC.) AND FLANGE BRACES.

SECONDARY MEMBERS (PURLINS, GIRTS, OPENING FRAMING, ETC.) AND FLANGE BRACE CONNECTIONS MAY ALWAYS BE "SNUG-TIGHT", UNLESS INDICATED OTHERWISE IN THESE DRAWINGS.

6. GENERAL DESIGN NOTES:

1) ALL STRUCTURAL STEEL SECTIONS AND WELDED PLATE MEMBERS ARE DESIGNED IN ACCORDANCE WITH ANSI/AISC 360 "SPECIFICATIONS FOR STRUCTURAL STEEL BUILDINGS" OR THE CAN/CSA S16 "LIMIT STATES DESIGN OF STEEL STRUCTURES", AS REQUIRED BY THE SPECIFIED BUILDING CODE.
2) ALL WELDING OF STRUCTURAL STEEL IS BASED ON EITHER AWS D1.1 "STRUCTURAL WELDING CODE - STEEL" OR CAN/CSA W59 "WELDED STEEL CONSTRUCTION (METAL ARC WELDING)", AS REQUIRED BY THE SPECIFIED BUILDING CODE.
3) ALL COLD FORMED MEMBERS ARE DESIGNED IN ACCORDANCE WITH ANSI/AISI S100 OR CAN/CSA S136 "SPECIFICATIONS FOR THE DESIGN OF COLD FORMED STEEL STRUCTURAL MEMBERS", AS REQUIRED BY THE SPECIFIED BUILDING CODE.
4) ALL WELDING OF COLD FORMED STEEL IS BASED ON AWS D1.3 "STRUCTURAL WELDING CODE - SHEET STEEL" OR CAN/CSA W59 "WELDED STEEL CONSTRUCTION (METAL ARC WELDING)", AS REQUIRED BY THE SPECIFIED BUILDING CODE.
5) ALL NUCOR BUILDING GROUP FACILITIES ARE IAS AC-472 ACCREDITED FOR DESIGN AND FABRICATION OF METAL BUILDING SYSTEMS. FOR PROJECTS IN CANADA, DESIGN AND FABRICATION ARE DONE ONLY IN FACILITIES THAT ARE ALSO CAN/CSA A660 AND W47.1 CERTIFIED.
6) IF JOISTS ARE INCLUDED WITH THIS PROJECT, THEY ARE SUPPLIED AS A PART OF THE SYSTEMS ENGINEERED METAL BUILDING AND ARE FABRICATED IN ACCORDANCE WITH THE REQUIREMENTS OF SECTION 1926.758 OF THE OSHA SAFETY STANDARDS FOR STEEL ERECTION, DATED JANUARY 18, 2001.
7) COLUMN BASE PLATES ARE DESIGNED NOT TO EXCEED THE ALLOWABLE BEARING STRESS OF CONCRETE THAT HAS A MINIMUM COMPRESSIVE STRENGTH OF 3000 P.S.I. AT 28 DAYS.

BUILDING INFORMATION

PRIMER COLORS

PRIMARY PRIMER COLOR: GRAY SECONDARY PRIMER COLOR: GRAY

ROOF SHEETING

TYPE: CR GAUGE: 26 FINISH: Galvalume Plus CLIP TYPE: N/A
THERMAL BLOCKS: No EPS FOAM SPACER: No ROOF LINE TRIM, PAINTED: Midnight Black PVDF
YES☒ NO☐ DOWNSPOUTS PAINTED: ____ GUTTERS PAINTED: --
YES☒ NO☐ INSULATION 4.38 INCH (NOT BY MBS)
YES☐ NO☒ PIPE JACKS, SIZE: ____ QUANTITY: ____
YES☐ NO☒ RIDGE VENTS, 10'-0" LONG X 9" THROAT. QUANTITY: ____
YES☐ NO☒ ROOF FRAMED OPENINGS, SEE ROOF FRAMING PLAN FOR SIZES
YES☐ NO☒ COMPOSITE CFR DECK, TYPE: N/A GAUGE: ____ FINISH: ____

WALL SHEETING

TYPE: ____ GAUGE: ____ FINISH: ____
CORNER TRIM, PAINTED: ____ BASE TRIM, PAINTED: ____
YES☒ NO☐ WALKDOORS, QUANTITY: (4) 3070 PA PAINTED: WHITE
YES☐ NO☒ WINDOWS, QUANTITY: ____ PAINTED: ____
YES☐ NO☒ INSULATION ____ INCH (NOT BY MBS)

WALL FRAMED OPENINGS

YES☐ NO☒ FRAMED OPENING TRIM, PAINTED: ____
SIZES: FSW: (5) 6'-0" W x 3'-0" H, window sill at 16'-0"
BSW: (3) 6'-0" W x 3'-0" H, window sill at 8'-0" (1) 6'-4 1/2" W x 7'-2 1/4" H (2) 12'-0" W x 14'-0" H
LEW: none
REW: (2) 6'-0" W x 3'-0" H, window sill at 8'-0"

BUILDING OPTIONS

YES☐ NO☒ LINER PANELS
FRAMED OPENING TRIM, PAINTED: ____
WALL: TYPE: ____ GAUGE: ____ FINISH: ____ WALL TRIM, PAINTED: ____
CEILING: TYPE: ____ GAUGE: ____ FINISH: ____

YES☐ NO☒ TRANSLUCENT PANELS
WALL: ____
ROOF: ____
INSULATED PANELS? YES☐ NO☐

YES☒ NO☐ EAVE EXTENSION
PROJ: 2'-0" by 165'-0" TYPE: CW GAUGE: 26 FINISH: Galvalume Plus SOFFIT TRIM AT BUILDING LINE PAINTED: --

YES☒ NO☐ RAKE EXTENSION
PROJ: 2'-0" by 120'-0" TYPE: CW GAUGE: 26 FINISH: Galvalume Plus SOFFIT TRIM AT BUILDING LINE PAINTED: --

YES☐ NO☒ CANOPY
AT EAVE LINE ☐ BELOW EAVE ☐ PROJECTION: ____ CLEAR UNDER CANOPY BEAM: ____
ROOF PANEL: TYPE: ____ GAUGE, FINISH: ____
SOFFIT PANEL: TYPE: ____ GAUGE, FINISH: ____ SOFFIT TRIM AT BUILDING LINE PAINTED: ____

YES☐ NO☒ PARTITION WALLS
WALL PANEL: TYPE: ____ GAUGE, FINISH: ____ TRIM PAINTED: ____

YES☐ NO☒ WAINSCOT
WALL PANEL: TYPE: ____ GAUGE, FINISH: ____
BASE TRIM PAINTED: ____ JAMB TRIM PAINTED: ____ TRANSITION TRIM PAINTED: ____

YES☐ NO☒ FASCIA
PROJ: ____ TOP OF FASCIA HEIGHT: ____
FACE PANEL, TYPE: ____ GAUGE, FINISH: ____ CAP TRIM PAINTED: ____
BACK PANEL, TYPE: ____ GAUGE, FINISH: ____ BASE TRIM PAINTED: ____
☐ CLOSED SYSTEM, CLEAR UNDER SOFFIT TRIM: ____
SOFFIT PANEL, TYPE: ____ GAUGE, FINISH: ____ SOFFIT TRIM AT BUILDING LINE PAINTED: ____
☐ OPEN SYSTEM, (NO SOFFIT PANEL PROVIDED) CLEAR UNDER SOFFIT TRIM: ____

YES☐ NO☒ PARAPET
☐ STRUCTURAL PARAPET ☐ NON-STRUCTURAL PARAPET TOP OF PARAPET HEIGHT: ____
BACK PANEL, TYPE: ____ GAUGE, FINISH: ____

YES☐ NO☒ CRANES (SEE CRANE PLAN FOR ADDITIONAL INFORMATION)
YES☐ NO☒ MEZZANINE (SEE MEZZANINE PLAN FOR ADDITIONAL INFORMATION)

THE DRAWINGS AND THE METAL BUILDING THEY REPRESENT ARE THE PRODUCT OF THE METAL BUILDING MANUFACTURER. THE REGISTERED PROFESSIONAL ENGINEER'S SEAL PERTAINS ONLY TO THE REQUIREMENTS LISTED HEREIN FOR THE MATERIALS DESIGNED AND SUPPLIED BY THE METAL BUILDING MANUFACTURER. THE REGISTERED PROFESSIONAL ENGINEER WHOSE SEAL APPEARS ON THESE DRAWINGS IS EMPLOYED OR ENGAGED BY THE METAL BUILDING MANUFACTURER AND DOES NOT SERVE AS OR REPRESENT THE PROJECT ENGINEER OF RECORD AND SHALL NOT BE CONSTRUED AS SUCH.

7. GLOSSARY OF ABBREVIATIONS:

A.B. = ANCHOR BOLTS	MAX = MAXIMUM	REQ'D = REQUIRED
BS = BOTH SIDES	M.B. = MACHINE BOLTS	REV. = REVISION
B.U. = BUILT-UP	MBS = METAL BUILDING SUPPLIER	SIM = SIMILAR
DIA = DIAMETER	TBD = TO BE DETERMINED	SL = STEEL LINE
FLG = FLANGE	N/A = NOT APPLICABLE	N.S. = NEAR SIDE
F.S = FAR SIDE	NIC = NOT IN CONTRACT	MIN = MINIMUM
GA. = GAUGE	SLV = SHORT LEG VERTICAL	TYP = TYPICAL
H.S.B. = HIGH STRENGTH BOLTS	O.A.L. = OVERALL LENGTH	PL = PLATE
HT. = HEIGHT	O.C. = ON CENTER	
LLV = LONG LEG VERTICAL	U.N.O. = UNLESS NOTED OTHERWISE	

PEMB = PRE-ENGINEERED METAL BUILDING MANUFACTURER
?? = PART MARK TO BE DETERMINED AND WILL BE UPDATED ON CONSTRUCTION DRAWINGS

ERECTION MANUALS REQUIRED

(ERECTION MANUALS ARE SHIPPED IN A WAREHOUSE PACKING CRATE)

☐ CFR ROOF	☐ H9700 OR ☐ H8260	☐ SINGLE CURB (H9850)
☒ CLASSIC ROOF	☒ H9420 OR ☐ H8201	☐ DOUBLE CURB (H9800)
		☐ VR16 II (H9925)

FOR BUILDING ERECTION
THIS IS NOT AN APPROVAL SET,
YOUR BUILDING IS BEING FABRICATED.
NO CHANGES CAN BE MADE.
01/27/2022

NUCOR BUILDING SYSTEMS
A DIVISION OF NUCOR CORPORATION

MBMA MEMBER

IAS ACCREDITED* Metal Building Systems AC 472

BUILDING LOADS

DESIGN CODE: IBC 18
ROOF LIVE LOAD: 20.00 PSF MBMA OCC. CLASS: II
LIVE LOAD REDUCIBLE Yes
GROUND SNOW LOAD: 20.0 PSF SNOW EXP. FACTOR, Ce: 1.0000
SNOW IMPORTANCE FACTOR, Is: 1.00
5 YEAR RAINFALL INTENSITY (IN/HR): 7.00
WIND: 115 / 89 MPH (Vult) / (Vasd)
C & C PRESSURES (PSF): 19 / -25
EXPOSURE: B
UL 90 NO
Classic Roof-Const. No. 161 ; Classic Roof w/ Translucent Panel-Const. No. 167
CFR Roof-Const. No. 552 ; CFR Roof w/ Translucent Panel-Const. No. 590 ;
Composite CFR Roof-Const. No. 552A ; VR16 II Roof-Const. No. 332 .
SEISMIC INFORMATION Ss: 0.120 S1: 0.060
Design Sds/Sd1: 0.128 / 0.096 Site Class: D
Seismic Imp. Factor: 1.00 Seismic Design Category: B
Analysis Procedure: Equivalent Lateral Force Method
Basic SFRS: Not Detailed for Seismic

NOTES:
1) COLLATERAL DEAD LOADS, UNLESS OTHERWISE NOTED, ARE ASSUMED TO BE UNIFORMLY DISTRIBUTED. WHEN SUSPENDED SPRINKLER SYSTEMS, LIGHTING, HVAC EQUIPMENT, CEILINGS, ETC., ARE SUSPENDED FROM ROOF MEMBERS, CONSULT THE M.B.S. IF THESE CONCENTRATED LOADS EXCEED 500 POUNDS (USING THE WEB MOUNT DETAIL) OR 200 POUNDS (USING THE FLANGE MOUNT DETAIL), OR IF INDIVIDUAL MEMBERS ARE LOADED SIGNIFICANTLY MORE THAN OTHERS.

2) THE DESIGN OF STRUCTURAL MEMBERS SUPPORTING GRAVITY LOADS IS CONTROLLED BY THE MORE CRITICAL EFFECT OF ROOF LIVE LOAD OR ROOF SNOW LOAD, AS DETERMINED BY THE APPLICABLE CODE.

3) Pm IS BASED ON THE MINIMUM ROOF SNOW LOAD CALCULATED PER BUILDING CODE OR THE CONTRACT SPECIFIED SNOW LOAD, WHICHEVER IS GREATER. THIS VALUE, Pm, IS ONLY APPLIED IN COMBINATION WITH THE DEAD AND COLLATERAL LOADS. ROOF SNOW IN OTHER LOADING CONDITIONS IS DETERMINED PER THE SPECIFIED BUILDING CODE.

	BUILDING		
ROOF DEAD (PSF):	2.50	ROOF SNOW Pm (PSF):	20.00
PRI. COL. (PSF):	3.00	WIND ENCLOSURE:	Closed
SEC. COL. (PSF):	3.00	GCpi:	+/-0.18
SNOW Ct:	1.00	SEISMIC R:	3
SNOW Cs:	1.00	SEISMIC Cs:	0.043
ROOF SNOW Ps (PSF):	14.00	BASE SHEAR (KIPS):	9.18

DRAWING INDEX

COVERSHEET C1, C2
ANCHOR BOLT DRAWINGS F1, F2
COLUMN BASE REACTIONS R1
STRUCTURAL/SHEETING DRAWINGS E1 - E8
DETAILS D1 - D8

TRADEMARK 1998, NUCOR BUILDING SYSTEMS

ISSUE	DWN	CHK	ENG	PE	DATE
ANCHOR BOLTS	TDN	MBS	JSA		12/20/2021
PERMITS	TDN	MBS	JSA	KAP	12/24/2021
FINAL ERECTIONS	BDT	MBS	JSA	KAP	1/10/2022

NUCOR BUILDING SYSTEMS
305 INDUSTRIAL PARKWAY, WATERLOO, IN 46793
PHONE: (260) 837-7891 FAX: (260) 837-7384
PO BOX 1006, 200 WHETSTONE RD, SWANSEA, SC 29160
PHONE: (803) 568-2100 FAX: (803) 568-2121
600 APACHE TRAIL, TERRELL, TX 75160
PHONE: (972) 524-0117 FAX: (972) 524-3417
1005 WATER ST, BRIGHAM CITY, UT 84302
PHONE: (435) 919-3100 FAX: (435) 919-3101

PROJECT NAME: DBAT SINGLE SLOPE , LEES SUMMIT, MO 64086
CUSTOMER NAME: MAR BUILDING SOLUTIONS LEES SUMMIT, MO 64081
JOB NUMBER: T21K0694A
SHEET TITLE:

STATE OF MISSOURI — KYLE A. PARSONS — NUMBER PE-2017008513 — 01/27/2022 — PROFESSIONAL ENGINEER

This seal pertains only to the materials designed and supplied by Nucor Building Systems, a division of Nucor Corporation. The drawings and the materials they represent are the product of Nucor Building Systems. The register professionally engaged by Nucor Building Systems and does not serve as the registered professional of record and shall not be construed as such.

SHEET C1 of 2

FOR OCCUPANCY (RISK) CATEGORY I OR II, IBC PROVISIONS INDICATE THAT SINGLE-STORY BUILDINGS SHALL HAVE "NO DRIFT LIMIT" PROVIDED THAT INTERIOR WALLS, PARTITIONS, CEILINGS, AND EXTERIOR WALL SYSTEMS HAVE BEEN DESIGNED TO ACCOMMODATE THE SEISMIC STORY DRIFTS. INTERIOR WALLS, PARTITIONS, CEILINGS, OR EXTERIOR WALL SYSTEMS NOT PROVIDED BY THE METAL BUILDING MANUFACTURER SHALL BE DESIGNED AND DETAILED BY OTHERS TO ACCOMMODATE THE SEISMIC STORY DRIFTS. SEISMIC DRIFT VALUES MAY BE OBTAINED FROM THE METAL BUILDING MANUFACTURER. BCL2

THIS BUILDING SYSTEM DESIGN IS BASED ON UNIFORMLY APPLYING THE CONTRACT-SPECIFIED LIVE LOAD AND ROOF SNOW LOAD. IN ADDITION, THE DESIGN IS BASED ON APPLYING A CODE-DEFINED LIVE LOAD (INCLUDING APPLICABLE REDUCTIONS) AND A CODE-DEFINED SNOW LOAD (BASED ON CONTRACT-SPECIFIED GROUND SNOW) FOR ALL PARTIAL LOADING AND UNBALANCED SNOW LOAD CONDITIONS. BCL4

THE PROJECT "ENGINEER OF RECORD" (EOR), NOT THE METAL BUILDING MANUFACTURER, IS RESPONSIBLE FOR ASSURING THAT THE ROOF/WALL SHEETING NOT PROVIDED BY THE METAL BUILDING MANUFACTURER IS DESIGNED TO SAFELY WITHSTAND ALL CODE REQUIRED LOADINGS ASSOCIATED WITH THE PURLIN/GIRT SPACING PROVIDED. ALL TRIM AND FLASHING FOR THE WALLS AND ROOF NOT PROVIDED BY THE METAL BUILDING MANUFACTURER ARE TO BE PROVIDED BY OTHERS. W02

IF SNOW GUARDS OR OTHER DEVICES INTENDED TO HOLD SNOW AND/OR ICE ACCUMULATION ON THE ROOF SYSTEM ARE TO BE USED ON THIS PROJECT, THEY MUST BE INSTALLED UNDER THE GUIDANCE OF THE PROJECT "ENGINEER OF RECORD" (EOR), NOT THE METAL BUILDING MANUFACTURER, SO AS NOT TO EXCEED THE DESIGN ROOF SNOW LOAD ON THIS PROJECT. RA3

FRAMED OPENINGS HAVE BEEN DESIGNED TO SUPPORT WIND LOAD NORMAL TO THE WALL BASED ON THE STANDARD BUILDING CODE CRITERIA. FRAMED OPENINGS HAVE NOT BEEN DESIGNED FOR ANY ADDITIONAL MOMENT OR CATENARY FORCES FROM THE DOOR. ANY CHANGE TO THE INFORMATION SHOWN HERE WILL REQUIRE AN ENGINEERING INVESTIGATION AND POSSIBLE BUILDING REINFORCEMENT. MO2

ISSUE	DWN	CHK	ENG	PE	DATE
ANCHOR BOLTS	TDN	MBS	JSA		12/20/2021
PERMITS	TDN	MBS	JSA	KAP	12/24/2021
FINAL ERECTIONS	BDT	MBS	JSA	KAP	1/10/2022

NUCOR BUILDING SYSTEMS
305 INDUSTRIAL PARKWAY, WATERLOO, IN 46793
PHONE: (260) 837-7891 FAX: (260) 837-7384
PO BOX 1006, 200 WHETSTONE RD, SWANSEA, SC 29160
PHONE: (803) 568-2100 FAX: (803) 568-2121
600 APACHE TRAIL, TERRELL, TX 75160
PHONE: (972) 524-4017 FAX: (972) 524-5417
1000 WESTGATE AVE, BRIGHAM CITY, UT 84302
PHONE: (435) 919-3100 FAX: (435) 919-3101

PROJECT NAME
DBAT SINGLE SLOPE
, LEES SUMMIT, MO 64086

CUSTOMER NAME
MAR BUILDING SOLUTIONS
LEES SUMMIT, MO 64081

JOB NUMBER
T21K0694A

SHEET TITLE

STATE OF MISSOURI
KYLE A. PARSONS
NUMBER
PE-2017008513
01/27/2022
PROFESSIONAL ENGINEER

This seal pertains only to the materials designed and supplied by Nucor Building Systems, a division of Nucor Corporation. The drawings and the materials which comprise the drawings are the product of Nucor Building Systems. The register professional engineer whose seal appears on these drawings is employed by Nucor Buildings Systems and does not serve as a consultant to the owner/ owner of record and shall not be construed as such.

SHEET
C2 of 2

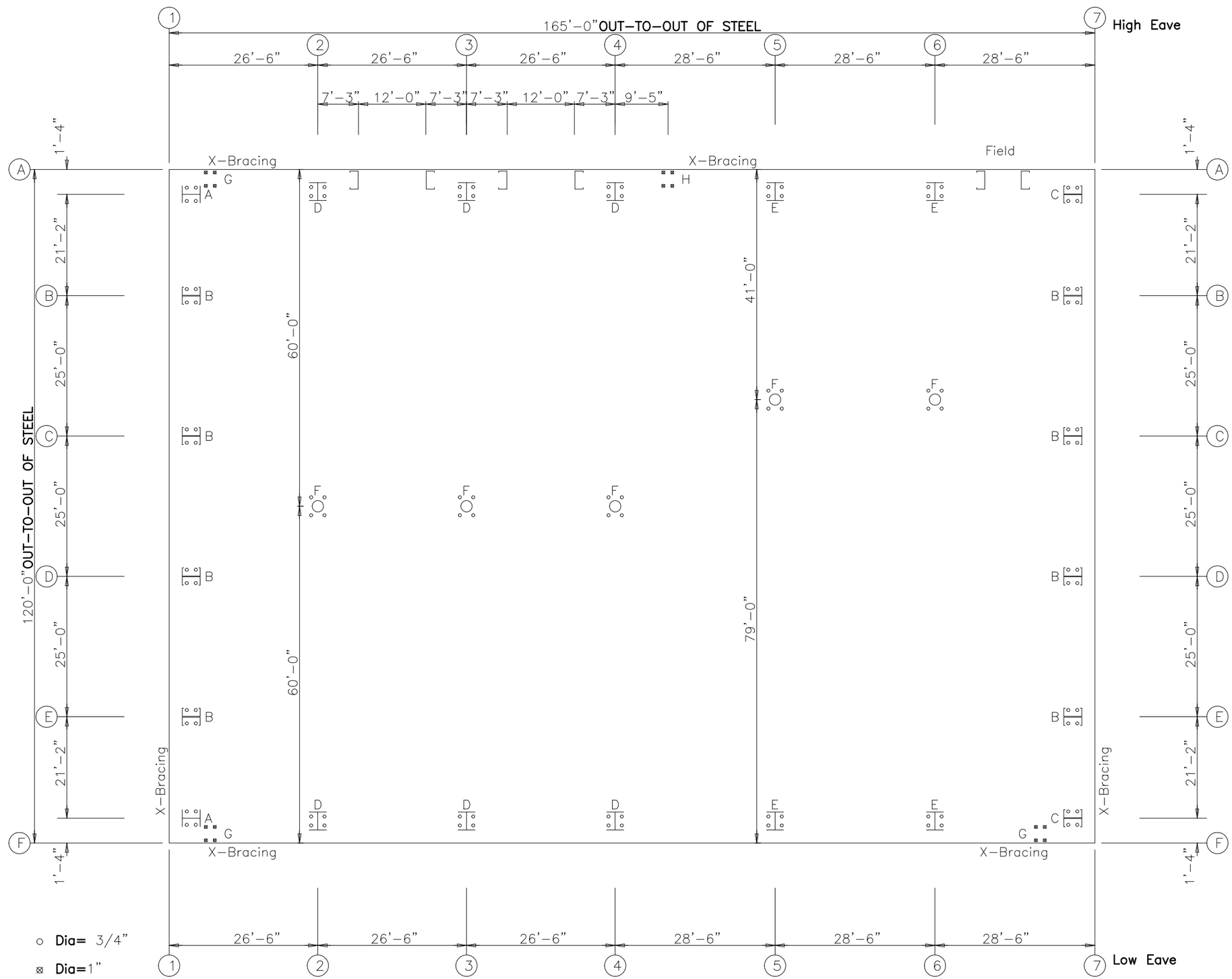

ANCHOR BOLT PLAN

NOTE: All Base Plates @ 100'-0" (U.N.)

ANCHOR BOLT SUMMARY

	Qty	Locate	Dia (in)	Type	Proj (in)
○	48	Endwall	3/4"	F1554	3.00
○	60	Frame	3/4"	F1554	3.00
⊠	12	BraceAnc	1"	F1554	3.00

ANCHOR BOLT PLAN

GENERAL NOTES

1. THE SPECIFIED ANCHOR ROD DIAMETER ASSUMES F1554 GRADE 36 UNLESS NOTED OTHERWISE. ANCHOR ROD MATERIAL OF EQUAL DIAMETER MEETING OR EXCEEDING THE STRENGTH REQUIREMENTS SET FORTH ON THESE DRAWINGS MAY BE UTILIZED AT THE DISCRETION OF THE FOUNDATION DESIGN ENGINEER. ANCHOR ROD EMBED-MENT LENGTH SHALL BE DETERMINED BY THE FOUNDATION DESIGN ENGINEER.
2. METAL BUILDING MANUFACTURER IS NOT RESPONSIBLE FOR PROJECT FOUNDATION DESIGN. THE FOUNDATION DESIGN IS THE RESPONSIBILITY OF A REGISTERED PROFESSIONAL ENGINEER, FAMILIAR WITH LOCAL SITE CONDITIONS.
3. ANCHOR RODS, NUTS, FLAT WASHERS FOR ANCHOR RODS, EXPANSION BOLTS, AND CONCRETE/MASONRY EMBEDMENT PLATES ARE NOT BY METAL BUILDING MANUFACTURER.
4. THE ANCHOR ROD LOCATIONS PROVIDED BY METAL BUILDING MANUFACTURER SATISFY PERTINENT REQUIREMENTS FOR THE DESIGN OF THE MATERIALS SUPPLIED BY THE METAL BUILDING MANUFACTURER. IT IS THE RESPONSIBILITY OF THE FOUNDATION ENGINEER TO MAKE CERTAIN THAT SUFFICIENT EDGE DISTANCE IS PROVIDED FOR ALL ANCHOR RODS IN THE DETAILS OF THE FOUNDATION DESIGN.
5. DRAWINGS ARE NOT TO SCALE. SEE DETAILS FOR COLUMN ORIENTATION.
6. THE ANCHOR ROD PLAN INDICATES WHERE THE ANCHOR RODS ARE TO BE PLACED AS WELL AS THE FOOTPRINT OF THE METAL BUILDING. IT IS ESSENTIAL THAT THESE ANCHOR ROD PATTERNS BE FOLLOWED. IF THESE SETTINGS DIFFER FROM THE ARCHITECTURAL FOUNDATION PLANS, THE METAL BUILDING MANUFACTURER MUST BE CONTACTED IMMEDIATELY – BEFORE CONCRETE IS PLACED.
7. "SINGLE" CEE COLUMNS SHALL BE ORIENTED WITH THE "TOES" TOWARD THE LOW EAVE UNLESS NOTED OTHERWISE.
8. ALL DIMENSIONS ARE OUT TO OUT OF STEEL. IF CONCRETE NOTCH IS REQUIRED THEN THE REQUIRED DIMENSION SHOULD BE ADDED TO OBTAIN THE OUT TO OUT OF CONTRETE DIMENSIONS.
9. FINISHED FLOOR ELEVATION = 100'-0" BOTTOM OF BASE PLATE = 100'-0" UNLESS NOTED OTHERWISE.

ISSUE	DWN	CHK	ENG	PE	DATE
ANCHOR BOLTS	TDN	MBS	JSA		12/20/2021
PERMITS	TDN	MBS	JSA	KAP	12/24/2021
FINAL ERECTIONS	BDT	MBS	JSA	KAP	1/10/2022

NUCOR BUILDING SYSTEMS
305 INDUSTRIAL PARKWAY, WATERLOO, IN 46793
PHONE: (260) 837-7891 FAX: (260) 837-7384
PO BOX 1006, 200 WHETSTONE RD, SWANSEA, SC 29160
PHONE: (803) 568-2100 FAX: (803) 568-2121
600 APACHE TRAIL, TERRELL, TX 75160
PHONE: (972) 524-0707 FAX: (972) 524-5417
1000 WESTPORT AVE, BRIGHAM CITY, UT 84302
PHONE: (435) 919-3100 FAX: (435) 919-3101

PROJECT NAME
DBAT SINGLE SLOPE
, LEES SUMMIT, MO 64086

CUSTOMER NAME
MAR BUILDING SOLUTIONS
LEES SUMMIT, MO 64081

JOB NUMBER
T21K0694A

SHEET TITLE

STATE OF MISSOURI
KYLE A. PARSONS
NUMBER PE-2017008513
01/27/2022
PROFESSIONAL ENGINEER

This seal pertains only to the materials designed and supplied by Nucor Building Systems, a division of Nucor Corporation. The drawings and the information contained therein represent are the product of Nucor Building Systems. The register professional engineer who has affixed his seal to these drawings is employed by Nucor Building Systems and does not serve as a licensed professional engineer of record and shall not be construed as such.

SHEET
F1 of 2

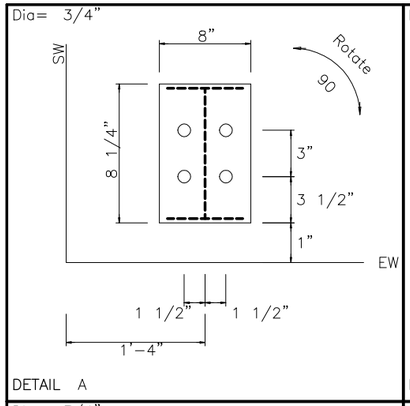

DETAIL A

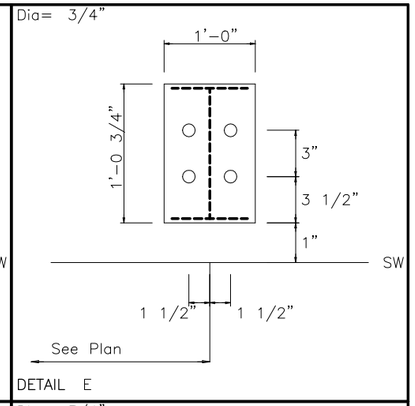

DETAIL E

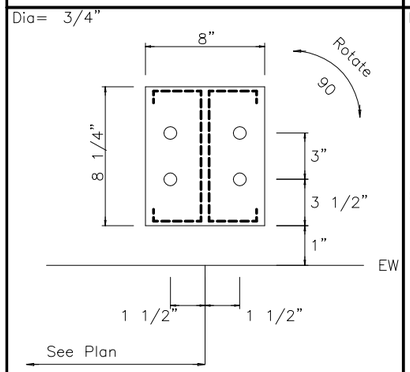

DETAIL B

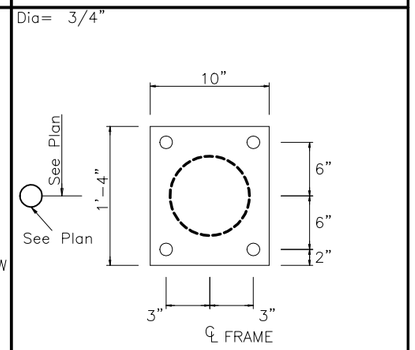

DETAIL F

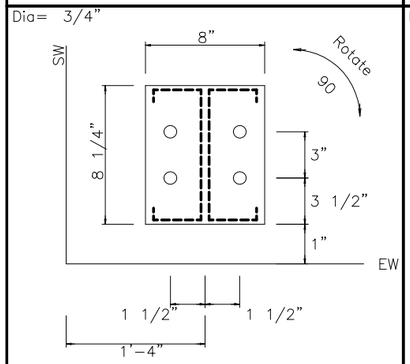

DETAIL C

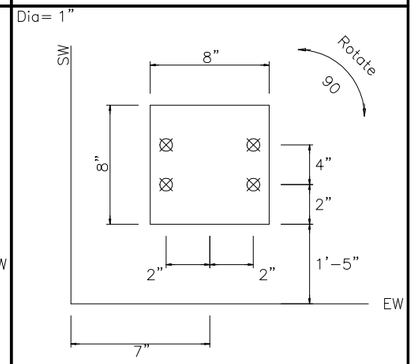

DETAIL G

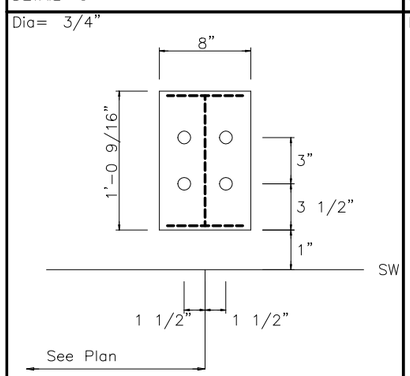

DETAIL D

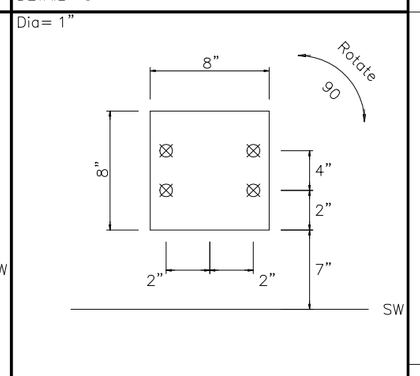

DETAIL H

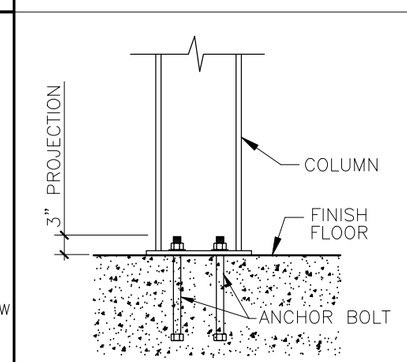

TYPICAL COLUMN BASE PLATE DETAIL

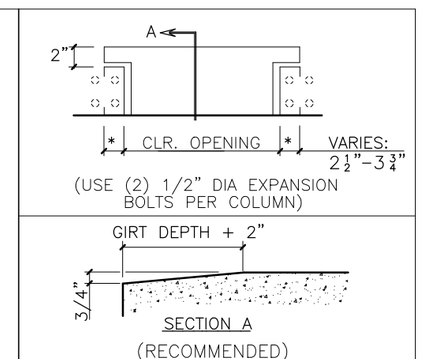

TYPICAL OVERHEAD DOOR FRAMED OPENING

FOUNDATION DESIGN NOTES:

1. THE ORIENTATION OF THE ANCHOR BOLT DETAILS SHOWN ON THIS PAGE MAY NOT COINCIDE WITH THE ACTUAL COLUMN ORIENTATION SHOWN ON THE ANCHOR BOLT DRAWING. PLEASE REFERENCE THE SIDEWALL (SW) AND ENDWALL (EW) STEEL LINES SHOWN ON THE ANCHOR BOLT DETAILS WITH THE ANCHOR BOLT PLAN DURING LAYOUT OF COLUMN AND ANCHOR BOLT LOCATIONS.

2. COLUMN BASE PLATES MAY HAVE MORE HOLES THAN ARE REQUIRED DUE TO PRODUCTION LIMITATIONS. PLEASE FOLLOW ANCHOR BOLT DETAILS FOR QUANTITY OF ANCHOR BOLTS REQUIRED. EXTRA BASE PLATE HOLES DO NOT NEED INFILLED PER THE MBS DESIGN SPECIFICATIONS.

ISSUE	DWN	CHK	ENG	PE	DATE
ANCHOR BOLTS	TDN	MBS	JSA		12/20/2021
PERMITS	TDN	MBS	JSA	KAP	12/24/2021
FINAL ERECTIONS	BDT	MBS	JSA	KAP	1/10/2022

NUCOR BUILDING SYSTEMS
305 INDUSTRIAL PARKWAY, WATERLOO, IN 46793
PHONE: (260) 837-7891 FAX: (260) 837-7384
PO BOX 1006, 200 WHETSTONE RD, SWANSEA, SC 29160
PHONE: (803) 568-2100 FAX: (803) 568-2121
600 APACHE TRAIL, TERRELL, TX 75160
PHONE: (972) 524-4417 FAX: (972) 524-3302
1005 WESTPORT AVE, BRIGHAM CITY, UT 84302
PHONE: (435) 919-3100 FAX: (435) 919-3101

PROJECT NAME
DBAT SINGLE SLOPE
, LEES SUMMIT, MO 64086

CUSTOMER NAME
MAR BUILDING SOLUTIONS
LEES SUMMIT, MO 64081

JOB NUMBER
T21K0694A

SHEET TITLE

STATE OF MISSOURI
KYLE A. PARSONS
NUMBER
PE-2017008513
01/27/2022
PROFESSIONAL ENGINEER

This seal pertains only to the materials designed and supplied by Nucor Building Systems, a division of Nucor Corporation. The drawings and bills of materials, including any supplement, are the product of Nucor Building Systems. The registar professional engineer who seals and signs these drawings is employed by Nucor Buildings Systems and does not serve as a consultant to the owner of record and shall not be construed as such.

SHEET
F2 of 2

FRAME LINES: 2 3 4

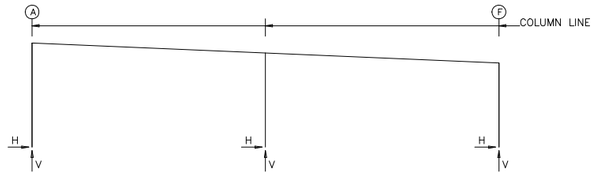

FRAME LINES: 5 6

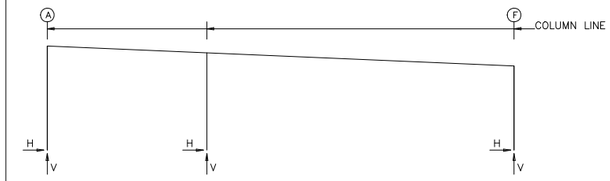

RIGID FRAME: BASIC COLUMN REACTIONS (k)

Frame Line	Column Line	Dead Horiz	Dead Vert	Collateral Horiz	Collateral Vert	Live Horiz	Live Vert	Snow Horiz	Snow Vert	Wind_Left1 Horiz	Wind_Left1 Vert	Wind_Right1 Horiz	Wind_Right1 Vert
2*	A	1.0	3.6	0.8	2.5	3.3	11.1	3.9	12.4	−7.3	−11.3	1.8	−13.8
2*	F	−1.0	3.4	−0.8	2.5	−3.3	11.1	−3.9	12.4	−4.7	−7.5	10.2	−16.9
2*	@60.0	0.0	7.3	0.0	6.2	0.0	24.7	0.0	28.8	0.0	−22.9	0.0	−34.1

Frame Line	Column Line	Wind_Left2 Horiz	Wind_Left2 Vert	Wind_Right2 Horiz	Wind_Right2 Vert	Wind_Long1 Horiz	Wind_Long1 Vert	Wind_Long2 Horiz	Wind_Long2 Vert	Seismic_Left Horiz	Seismic_Left Vert	Seismic_Right Horiz	Seismic_Right Vert
2*	A	−7.7	−5.3	0.6	−7.9	1.0	−9.0	−1.1	−14.3	−0.5	−0.2	0.5	0.2
2*	F	−4.4	−1.5	11.4	−10.9	−0.7	−9.1	0.4	−14.0	−1.0	0.4	1.0	−0.4
2*	@60.0	0.0	−8.7	0.0	−20.0	0.0	−21.7	0.0	−34.6	0.0	−0.2	0.0	0.2

Frame Line	Column Line	MIN_SNOW Horiz	MIN_SNOW Vert	F1PAT_SL_1 Horiz	F1PAT_SL_1 Vert	F1PAT_SL_2 Horiz	F1PAT_SL_2 Vert	F1PAT_LL_3 Horiz	F1PAT_LL_3 Vert	F1PAT_LL_4 Horiz	F1PAT_LL_4 Vert
2*	A	5.6	17.8	1.2	6.3	0.8	−0.5	2.1	10.9	1.3	−0.9
2*	F	−5.6	17.7	−1.2	−0.3	−0.8	6.0	−2.1	−0.4	−1.3	10.3
2*	@60.0	0.0	41.2	0.0	6.9	0.0	7.5	0.0	11.9	0.0	12.9

Frame Line	Column Line	Dead Horiz	Dead Vert	Collateral Horiz	Collateral Vert	Live Horiz	Live Vert	Snow Horiz	Snow Vert	Wind_Left1 Horiz	Wind_Left1 Vert	Wind_Right1 Horiz	Wind_Right1 Vert
5*	A	1.5	3.6	1.2	1.7	4.6	7.9	5.3	8.7	−10.0	−9.8	1.4	−8.2
5*	F	−1.5	5.8	−1.2	3.7	−4.6	16.2	−5.3	18.3	−2.8	−12.8	11.4	−23.5
5*	@41.0	0.0	8.5	0.0	6.5	0.0	26.0	0.0	30.4	0.0	−21.8	0.0	−37.6

Frame Line	Column Line	Wind_Left2 Horiz	Wind_Left2 Vert	Wind_Right2 Horiz	Wind_Right2 Vert	Wind_Long1 Horiz	Wind_Long1 Vert	Wind_Long2 Horiz	Wind_Long2 Vert	Seismic_Left Horiz	Seismic_Left Vert	Seismic_Right Horiz	Seismic_Right Vert
5*	A	−9.7	−5.7	0.9	−4.0	−0.1	−6.3	−3.0	−10.0	−0.8	−0.5	0.8	0.5
5*	F	−3.2	−3.9	11.9	−14.5	0.4	−13.7	2.2	−21.3	−0.8	0.2	0.8	−0.2
5*	@41.0	0.0	−7.0	0.0	−22.9	0.0	−22.7	0.0	−36.1	0.0	0.3	0.0	−0.3

Frame Line	Column Line	MIN_SNOW Horiz	MIN_SNOW Vert	F2PAT_SL_1 Horiz	F2PAT_SL_1 Vert	F2PAT_SL_2 Horiz	F2PAT_SL_2 Vert	F2PAT_LL_3 Horiz	F2PAT_LL_3 Vert	F2PAT_LL_4 Horiz	F2PAT_LL_4 Vert
5*	A	7.6	12.4	0.6	4.9	2.1	−1.0	1.0	8.3	3.6	−1.6
5*	F	−7.6	26.1	−0.6	0.0	−2.1	8.7	−1.0	0.0	−3.6	14.9
5*	@41.0	0.0	43.4	0.0	4.6	0.0	10.6	0.0	7.9	0.0	18.1

2* Frame lines: 2 3 4
5* Frame lines: 5 6

ENDWALL COLUMN: ANCHOR BOLTS & BASE PLATES

Frm Line	Col Line	Anc._Bolt Qty	Anc._Bolt Dia	Base_Plate (in) Width	Base_Plate (in) Length	Base_Plate (in) Thick	Elev. (in)
1	A	4	0.750	8.000	8.250	0.375	0.0
1	B	4	0.750	8.000	8.250	0.375	0.0
1	C	4	0.750	8.000	8.250	0.375	0.0
1	D	4	0.750	8.000	8.250	0.375	0.0
1	E	4	0.750	8.000	8.250	0.375	0.0
1	F	4	0.750	8.000	8.250	0.375	0.0
7	F	4	0.750	8.000	8.250	0.375	0.0
7	E	4	0.750	8.000	8.250	0.375	0.0
7	D	4	0.750	8.000	8.250	0.375	0.0
7	C	4	0.750	8.000	8.250	0.375	0.0
7	B	4	0.750	8.000	8.250	0.375	0.0
7	A	4	0.750	8.000	8.250	0.375	0.0

GENERAL NOTES

1. ALL LOADING CONDITIONS ARE EXAMINED. THE MAXIMUM AND MINIMUM HORIZONTAL (H) AND VERTICAL (V) REACTIONS AND THE CORRESPONDING VERTICAL (V) OR HORIZONTAL (H) REACTIONS ARE REPORTED.
2. REACTIONS ARE PROVIDED BY LOAD CASE IN ORDER TO AID THE FOUNDATION ENGINEER IN DETERMINING THE APPROPRIATE LOAD FACTORS AND COMBINATIONS TO BE USED WTIH EITHER WORKING STRESS OR ULTIMATE STRENGTH DESIGN METHODS. WIND LOAD CASES ARE GIVEN FOR EACH PRIMARY WIND DIRECTION.
3. FOR ASCE7-10 AND LATER BASED BUILDING CODES, THE UNFACTORED LOAD CASE REACTIONS DUE TO WIND ARE GENERATED USING THE ULTIMATE DESIGN WIND SPEED (Vult).
4. POSITIVE (+) REACTIONS ARE AS SHOWN ABOVE. FOUNDATION LOADS ARE IN OPPOSITE DIRECTIONS.
5. BRACING REACTIONS ARE IN THE PLANE OF THE BRACE WITH THE HORIZONTAL REACTION (H) ACTING AWAY FROM THE BRACED BAY AND THE VERTICAL REACTION (V) ACTING DOWNWARD.

****** RIGID FRAME LOAD CASE ABBREVIATIONS: ******
Wind_L1/Wind_R1: LATERAL WIND FROM THE LEFT/RIGHT, CASE 1
Wind_L2/Wind_R2: LATERAL WIND FROM THE LEFT/RIGHT, CASE 2
Wind_Ln1/Wind_Ln2: LONGITUDINAL WIND, CASE 1/2
Seismic_L/Seismic_R: LATERAL SEISMIC LOAD FROM LEFT/RIGHT
LWIND#_L#E/LWIND#_R#E: LONGITUDINAL WIND EDGE ZONES
F#UNB_SL_L/F#UNB_SL_R: UNBALANCED ROOF SNOW WITH WIND FROM LEFT/RIGHT
F#PAT_LL #/F#PAT_SL #: PARTIAL LIVE/SNOW LOADING FOR CONTINUOUS BEAM SYSTEMS

****** ENDWALL COLUMN LOAD CASE ABBREVIATIONS: ******
Collat: COLLATERAL LOAD
Rafter Wind_L/Rafter Wind_R: LATERAL WIND FROM THE LEFT/RIGHT
Brace Wind_L/Brace Wind_R: LATERAL WIND FROM THE LEFT/RIGHT
Wind_P/Wind_S: LONGITUDINAL WIND PRESSURE/SUCTION ON COLUMNS
Wind_Ln: LONGITUDINAL WIND SUCTION ON ROOF
Seis_L/Seis_R: LATERAL SEISMIC LOAD FROM LEFT/RIGHT
E#UNB_SL_L/E#UNB_SL_R: UNBALANCED ROOF SNOW WITH WIND FROM LEFT/RIGHT
E#PAT_LL #/E#PAT_SL #: PARTIAL LIVE/SNOW LOADING FOR CONTINUOUS BEAM SYSTEMS

RIGID FRAME: ANCHOR BOLTS & BASE PLATES

Frm Line	Col Line	Anc._Bolt Qty	Anc._Bolt Dia	Base_Plate (in) Width	Base_Plate (in) Length	Base_Plate (in) Thick	Elev. (in)
2*	A	4	0.750	8.000	12.56	0.375	0.0
2*	F	4	0.750	8.000	12.56	0.375	0.0
2*	@60.0	4	0.750	10.00	16.00	0.750	0.0

2* Frame lines: 2 3 4

RIGID FRAME: ANCHOR BOLTS & BASE PLATES

Frm Line	Col Line	Anc._Bolt Qty	Anc._Bolt Dia	Base_Plate (in) Width	Base_Plate (in) Length	Base_Plate (in) Thick	Elev. (in)
5*	A	4	0.750	12.00	12.75	0.375	0.0
5*	F	4	0.750	12.00	12.75	0.500	0.0
5*	@41.0	4	0.750	10.00	16.00	0.750	0.0

5* Frame lines: 5 6

ENDWALL COLUMN: BASIC COLUMN REACTIONS (k)

Frm Line	Col Line	Dead Vert	Collat Vert	Live Vert	Snow Vert	Wind Left1 Vert	Wind Right1 Vert	Wind Left2 Vert	Wind Right2 Vert	Wind Press Horz	Wind Suct Horz	Wind Long1 Vert	Wind Long2 Vert
1	A	0.9	0.5	3.3	2.5	−3.1	−3.5	−2.2	−2.6	−2.5	2.8	−1.8	−3.1
1	B	1.7	1.3	7.2	5.9	−5.0	−9.0	−2.3	−6.3	−4.7	5.0	−5.2	−9.0
1	C	1.7	1.2	7.0	5.7	−5.0	−8.7	−2.4	−6.1	−4.9	5.2	−5.0	−8.7
1	D	1.6	1.2	7.0	5.7	−5.0	−8.7	−2.4	−6.1	−4.6	4.9	−5.0	−8.7
1	E	1.7	1.3	7.2	5.9	−5.1	−9.0	−2.4	−6.3	−4.1	4.4	−5.2	−9.1
1	F	0.8	0.5	3.3	2.6	−2.1	−4.3	−1.1	−3.3	−2.0	2.2	−1.9	−3.2

Frm Line	Col Line	Seis Left Vert	Seis Right Vert	MIN_SNOW Horz	MIN_SNOW Vert	E1PAT_SL_1 Horz	E1PAT_SL_1 Vert	E1PAT_SL_2 Horz	E1PAT_SL_2 Vert	E1PAT_SL_3 Horz	E1PAT_SL_3 Vert	E1PAT_SL_4 Horz	E1PAT_SL_4 Vert
1	A	0.0	0.0	0.0	3.7	0.0	1.2	0.0	0.0	0.0	1.0	0.0	−0.1
1	B	0.0	0.0	0.0	8.4	0.0	1.5	0.0	0.0	0.0	3.0	0.0	1.4
1	C	0.0	0.0	0.0	8.2	0.0	−0.2	0.0	0.1	0.0	1.4	0.0	3.2
1	D	0.0	0.0	0.0	8.2	0.0	0.1	0.0	−0.2	0.0	−0.2	0.0	1.4
1	E	0.0	0.0	0.0	8.4	0.0	0.0	0.0	1.6	0.0	0.0	0.0	−0.2
1	F	0.0	0.0	0.0	3.7	0.0	0.0	0.0	1.2	0.0	0.0	0.0	0.0

Frm Line	Col Line	E1PAT_SL_5 Horz	E1PAT_SL_5 Vert	E1PAT_SL_6 Horz	E1PAT_SL_6 Vert	E1PAT_LL_1 Horz	E1PAT_LL_1 Vert	E1PAT_LL_2 Horz	E1PAT_LL_2 Vert	E1PAT_LL_3 Horz	E1PAT_LL_3 Vert	E1PAT_LL_4 Horz	E1PAT_LL_4 Vert	E1PAT_LL_5 Horz	E1PAT_LL_5 Vert
1	A	0.0	0.0	0.0	0.0	0.0	3.1	0.0	−0.5	0.0	2.5	0.0	−0.3	0.0	3.0
1	B	0.0	−0.2	0.0	0.0	0.0	3.2	0.0	3.9	0.0	7.9	0.0	3.3	0.0	3.3
1	C	0.0	1.4	0.0	−0.2	0.0	3.6	0.0	3.4	0.0	2.8	0.0	8.1	0.0	2.9
1	D	0.0	3.2	0.0	1.4	0.0	3.6	0.0	3.4	0.0	3.5	0.0	2.8	0.0	8.1
1	E	0.0	1.4	0.0	3.2	0.0	3.2	0.0	4.1	0.0	4.0	0.0	3.4	0.0	3.3
1	F	0.0	−0.1	0.0	1.0	0.0	2.9	0.0	−0.5	0.0	−0.5	0.0	3.0	0.0	−0.3

Frm Line	Col Line	E1PAT_LL_6 Horz	E1PAT_LL_6 Vert
1	A	0.0	−0.5
1	B	0.0	4.1
1	C	0.0	3.5
1	D	0.0	2.9
1	E	0.0	7.5
1	F	0.0	2.4

Frm Line	Col Line	Dead Vert	Collat Vert	Live Vert	Snow Vert	Wind Left1 Vert	Wind Right1 Vert	Wind Left2 Vert	Wind Right2 Vert	Wind Press Horz	Wind Suct Horz	Wind Long1 Vert	Wind Long2 Vert
7	F	0.8	0.5	3.4	2.8	−4.6	−2.2	−3.5	−1.2	−2.0	2.2	−2.0	−3.4
7	E	1.7	1.4	7.4	6.2	−9.5	−5.4	−6.6	−2.6	−4.1	4.4	−5.5	−9.5
7	D	1.7	1.3	7.2	6.1	−9.2	−5.3	−6.5	−2.5	−4.6	4.9	−5.3	−9.2
7	C	1.7	1.3	7.2	6.1	−9.2	−5.3	−6.4	−2.6	−4.9	5.2	−5.3	−9.2
7	B	1.8	1.4	7.4	6.2	−9.5	−5.3	−6.6	−2.5	−4.7	5.0	−5.5	−9.5
7	A	0.9	0.5	3.4	2.8	−3.7	−3.3	−2.7	−2.3	−2.5	2.8	−1.9	−3.3

Frm Line	Col Line	Seis Left Vert	Seis Right Vert	MIN_SNOW Horz	MIN_SNOW Vert	E2PAT_SL_1 Horz	E2PAT_SL_1 Vert	E2PAT_SL_2 Horz	E2PAT_SL_2 Vert	E2PAT_SL_3 Horz	E2PAT_SL_3 Vert	E2PAT_SL_4 Horz	E2PAT_SL_4 Vert
7	F	0.0	0.1	0.0	4.0	0.0	1.3	0.0	0.0	0.0	1.1	0.0	−0.1
7	E	0.0	0.0	0.0	8.5	0.0	1.6	0.0	0.0	0.0	3.2	0.0	1.4
7	D	0.0	0.0	0.0	8.7	0.0	−0.2	0.0	0.1	0.0	1.5	0.0	3.3
7	C	0.0	0.0	0.0	8.7	0.0	0.1	0.0	−0.2	0.0	−0.2	0.0	1.5
7	B	0.0	0.0	0.0	8.9	0.0	0.0	0.0	1.6	0.0	0.0	0.0	−0.2
7	A	0.0	0.0	0.0	3.8	0.0	0.0	0.0	1.3	0.0	0.0	0.0	0.0

Frm Line	Col Line	E2PAT_SL_5 Horz	E2PAT_SL_5 Vert	E2PAT_SL_6 Horz	E2PAT_SL_6 Vert	E2PAT_LL_1 Horz	E2PAT_LL_1 Vert	E2PAT_LL_2 Horz	E2PAT_LL_2 Vert	E2PAT_LL_3 Horz	E2PAT_LL_3 Vert	E2PAT_LL_4 Horz	E2PAT_LL_4 Vert	E2PAT_LL_5 Horz	E2PAT_LL_5 Vert
7	F	0.0	0.0	0.0	0.0	0.0	3.1	0.0	−0.5	0.0	2.5	0.0	−0.3	0.0	3.1
7	E	0.0	−0.2	0.0	0.0	0.0	3.3	0.0	4.2	0.0	8.2	0.0	3.4	0.0	3.5
7	D	0.0	1.5	0.0	−0.2	0.0	3.7	0.0	3.5	0.0	3.0	0.0	8.4	0.0	3.0
7	C	0.0	3.3	0.0	1.5	0.0	3.7	0.0	3.5	0.0	3.6	0.0	3.0	0.0	8.4
7	B	0.0	1.5	0.0	3.2	0.0	3.3	0.0	4.3	0.0	4.2	0.0	3.5	0.0	3.3
7	A	0.0	−0.1	0.0	1.1	0.0	3.2	0.0	−0.5	0.0	−0.4	0.0	3.1	0.0	−0.3

Frm Line	Col Line	E2PAT_LL_6 Horz	E2PAT_LL_6 Vert
7	F	0.0	−0.4
7	E	0.0	4.2
7	D	0.0	3.7
7	C	0.0	3.0
7	B	0.0	8.2
7	A	0.0	2.4

BUILDING BRACING REACTIONS

Wall Loc	Wall Line	Col Line	± Reactions(k) Wind Horz	Wind Vert	Seismic Horz	Seismic Vert	Panel_Shear (lb/ft) Wind	Panel_Shear (lb/ft) Seis
L_EW	1	E,F	4.0	3.9	1.3	1.3		
F_SW	F	1,2	5.9	4.3	2.4	1.7		
		6,7	5.9	4.0	2.4	1.6		
R_EW	7	F,E	4.3	4.2	1.4	1.4		
B_SW	A	5,4	6.4	5.6	2.5	2.1		
		2,1	6.4	5.9	2.5	2.3		

ISSUE	DWN	CHK	ENG	PE	DATE
ANCHOR BOLTS	TDN	MBS	JSA		12/20/2021
PERMITS	TDN	MBS	JSA	KAP	12/24/2021
FINAL ERECTIONS	BDT	MBS	JSA	KAP	1/10/2022

NUCOR BUILDING SYSTEMS
305 INDUSTRIAL PARKWAY, WATERLOO, IN 46793
PHONE: (260) 837-7891 FAX: (260) 837-7384
PO BOX 1006, 200 WHETSTONE RD, SWANSEA, SC 29160
PHONE: (803) 568-2100 FAX: (803) 568-2121
600 APACHE TRAIL, TERRELL, TX 75160
PHONE: (972) 524-8417 FAX: (972) 524-3417
1000 WATER STREET, BRIGHAM CITY, UT 84302
PHONE: (435) 919-3100 FAX: (435) 919-3101

PROJECT NAME
DBAT SINGLE SLOPE
, LEES SUMMIT, MO 64086

CUSTOMER NAME
MAR BUILDING SOLUTIONS
LEES SUMMIT, MO 64081

JOB NUMBER
T21K0694A

SHEET TITLE

STATE OF MISSOURI
KYLE A. JARSONS
NUMBER
PE-2017008513
01/27/2022
PROFESSIONAL ENGINEER

This seal pertains only to the materials designed and supplied by Nucor Building Systems, a division of Nucor Corporation. The drawings and/or data bearing this seal are those that are the product of Nucor Building Systems. The register professional engineer who seals and signs these drawings is employed by Nucor Building Systems and does not serve as a licensed engineer of record or record and shall not be construed as such.

SHEET
R1 of 1

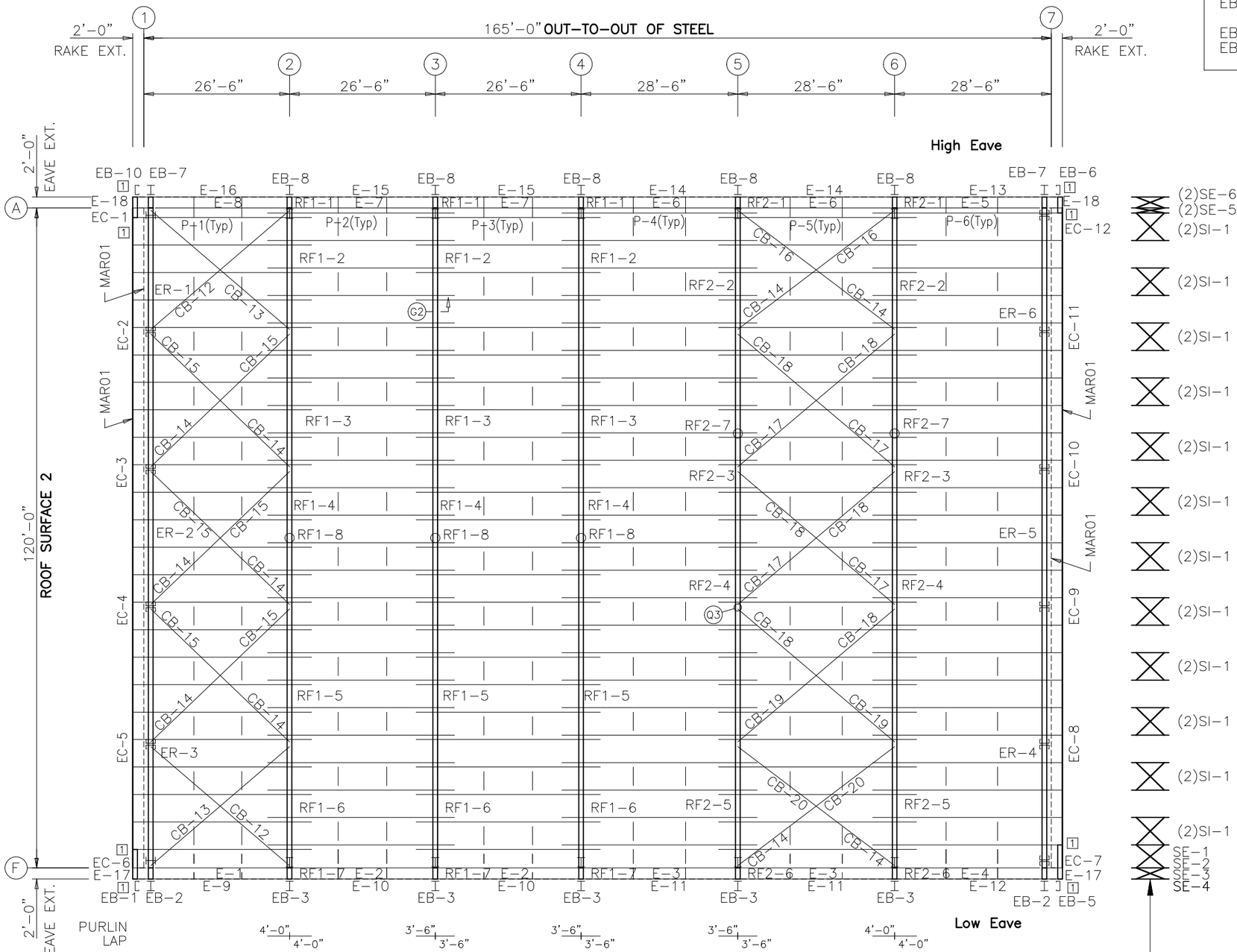

PURLIN BRACING TYPICAL PER BAY AS SHOWN SEE SHEET D4

ROOF FRAMING PLAN

EXTENSION/CANOPY BOLTS ROOF PLAN				
MARK	QUAN	TYPE	DIA	LENGTH
EB-2	4	A325	5/8"	2 1/4"
EB-3	4	A325	5/8"	2 1/4"
EB-7	4	A325	5/8"	2 1/4"
EB-8	4	A325	5/8"	2 1/4"

MEMBER TABLE ROOF PLAN		
MARK	PART	LENGTH
EB-1	J95C060	61.063
EB-2	W9513525	45.500
EB-3	W9513525	45.000
EB-5	J95C060	61.063
EB-6	J95C060	31.750
EB-7	W9513525	33.250
EB-8	W9513525	33.000
EB-10	J95C060	31.750
P-1	95Z067	389.750
P-2	95Z060	408.000
P-3	95Z060	402.000
P-4	95Z060	426.000
P-5	95Z067	432.000
P-6	95Z075	413.750
E-1	95E060	301.000
E-2	95E060	306.000
E-3	95E060	330.000
E-4	95E060	325.000
E-5	95HE060	325.000
E-6	95HE060	330.000
E-7	95HE060	306.000
E-8	95HE060	301.000
E-9	95C060	341.000
E-10	95C060	316.500
E-11	95C060	340.500
E-12	95C060	365.000
E-13	95C060	365.000
E-14	95C060	340.500
E-15	95C060	316.500
E-16	95C060	341.000
E-17	95E060	17.000
E-18	95HE060	17.000
CB-12	RD05-	410.000
CB-13	RD05-	403.000
CB-14	RD05-	16.000
CB-15	RD05-	414.000
CB-16	RD05-	417.000
CB-17	RD05-	22.000
CB-18	RD05-	430.000
CB-19	RD05-	24.000
CB-20	RD05-	415.000
SI-1	PBX-	62.625
SE-1	PBX-	48.125
SE-2	PBX-	48.375
SE-3	PBX-	24.500
SE-4	PBX-	24.188
SE-5	PBX-	19.375
SE-6	PBX-	24.750

CONNECTION PLATES ROOF PLAN	
☐ID	MARK/PART
1	EEC01

ROOF FRAMING PLAN

GENERAL NOTES

1. PLACE TAGGED END OF RAFTERS TOWARDS THE LOW EAVE.
2. STD. ROD/CABLE SIZES PER PART PREFIX ARE:
   ROD
   RD05- = 5/8" ROD
3. PURLIN AND EAVE STRUT CONNECTIONS UTILIZE BOTH A307 AND A325 BOLTS. REFER TO THE DETAILS FOR SPECIFIC USAGE REQUIREMENTS.
4. THIS DRAWING IS NOT TO SCALE.

ISSUE	DWN	CHK	ENG	PE	DATE
ANCHOR BOLTS	TDN	MBS	JSA		12/20/2021
PERMITS	TDN	MBS	JSA	KAP	12/24/2021
FINAL ERECTIONS	BDT	MBS	JSA	KAP	1/10/2022

NUCOR BUILDING SYSTEMS
305 INDUSTRIAL PARKWAY, WATERLOO, IN 46793
PHONE: (260) 837-7891 FAX: (260) 837-7384
PO BOX 1006, 200 WHETSTONE RD, SWANSEA, SC 29160
PHONE: (803) 568-2100 FAX: (803) 568-2121
600 APACHE TRAIL, TERRELL, TX 75160
PHONE: (972) 524-5417 FAX: (972) 524-5417
1005 WATER STREET, BRIGHAM CITY, UT 84302
PHONE: (435) 919-3100 FAX: (435) 919-3101

PROJECT NAME
DBAT SINGLE SLOPE
, LEES SUMMIT, MO 64086

CUSTOMER NAME
MAR BUILDING SOLUTIONS
LEES SUMMIT, MO 64081

JOB NUMBER
T21K0694A

SHEET TITLE

STATE OF MISSOURI
KYLE A. PARSONS
NUMBER PE-2017008513
01/27/2022
PROFESSIONAL ENGINEER

This seal pertains only to the materials designed and supplied by Nucor Building Systems, a division of Nucor Corporation. The drawings and the information contained therein are and are the product of Nucor Building Systems. The register professional engineer who affixes a seal on these drawings is employed by Nucor Buildings Systems and does not serve as a licensed engineer of record or engineer of record and shall not be construed as such.

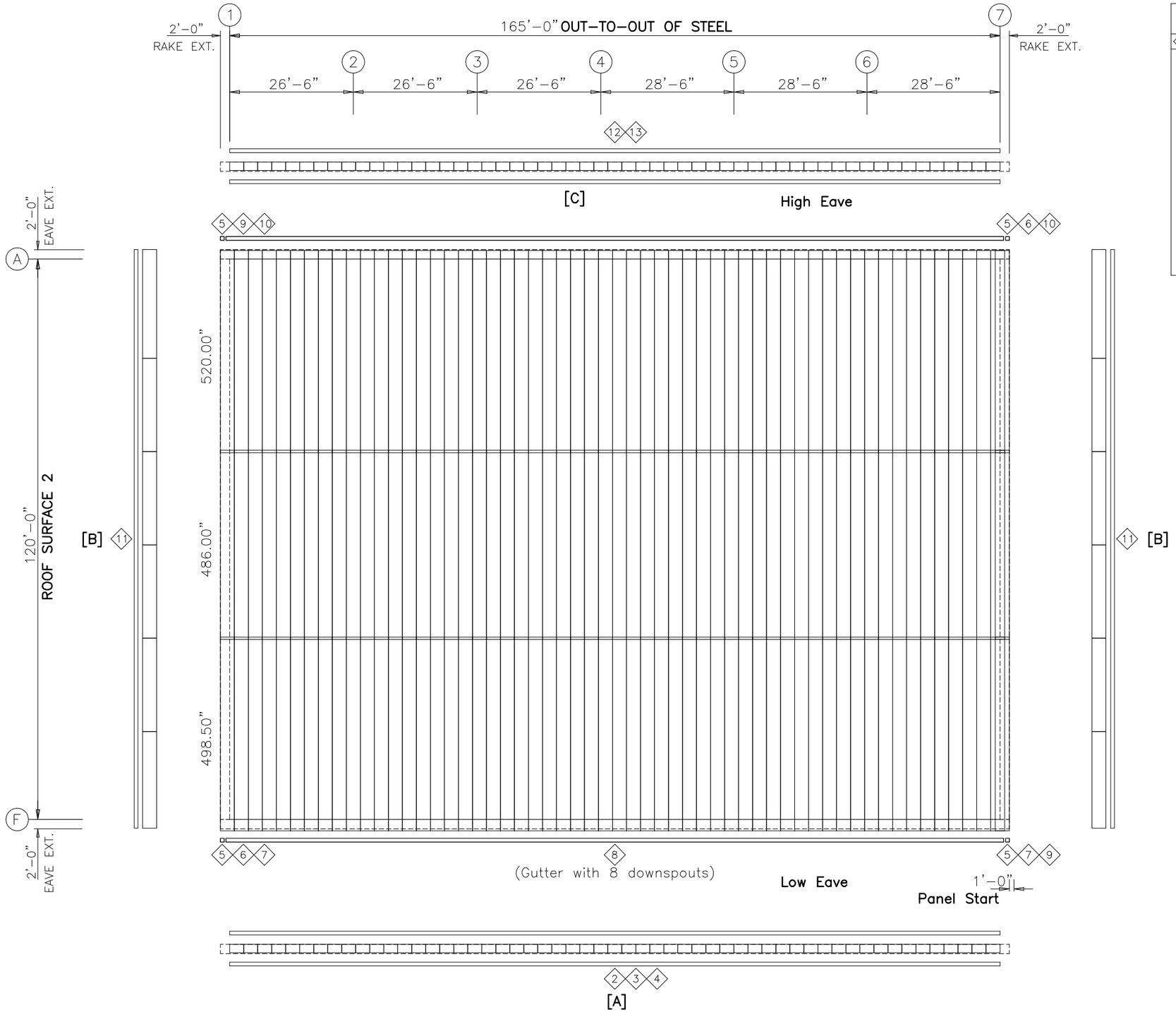

TRIM TABLE ROOF PLAN			
◇ID	PART	LENGTH	DETAIL
2	SET01	121.000	TRIM_822
3	CTA02	121.000	
4	LEE03	121.000	
5	H4000	5.000	
6	RCA01	9.250	
7	GRA01	8.000	
8	GTA02	242.000	TRIM_22
9	RCA02	9.250	
10	ERA01	8.060	
11	RET03	121.000	TRIM_835
12	LEE03	121.000	DM0090
13	HEA02	242.000	DM0090

ROOF SHEETING PLAN

PANELS: 26 Ga. CR – Galvalume Plus
[A] SOFFIT PANELS BY OTHERS
[B] SOFFIT PANELS BY OTHERS
[C] SOFFIT PANELS BY OTHERS

ISSUE	DWN	CHK	ENG	PE	DATE
ANCHOR BOLTS	TDN	MBS	JSA	KAP	12/20/2021
PERMITS	TDN	MBS	JSA	KAP	12/24/2021
FINAL ERECTIONS	BDT	MBS	JSA	KAP	1/10/2022

NUCOR BUILDING SYSTEMS
305 INDUSTRIAL PARKWAY, WATERLOO, IN 46793
PHONE: (260) 837-7891 FAX: (260) 837-7384
PO BOX 1006, 200 WHETSTONE RD, SWANSEA, SC 29160
PHONE: (803) 568-2100 FAX: (803) 568-2121
600 APACHE TRAIL, TERRELL, TX 75160
PHONE: (972) 524-0117 FAX: (972) 524-5417
1005 WESTGATE AVE, BRIGHAM CITY, UT 84302
PHONE: (435) 919-3100 FAX: (435) 919-3101

PROJECT NAME
DBAT SINGLE SLOPE
, LEES SUMMIT, MO 64086

CUSTOMER NAME
MAR BUILDING SOLUTIONS
LEES SUMMIT, MO 64081

JOB NUMBER
T21K0694A

SHEET TITLE

STATE OF MISSOURI
KYLE A. PARSONS
NUMBER
PE-2017008513
01/27/2022
PROFESSIONAL ENGINEER

This seal pertains only to the materials designed and supplied by Nucor Building Systems, a division of Nucor Corporation. The drawings and the information contained therein are the property of Nucor Building Systems. The register professional engineer who seals and signs on these drawings is employed by Nucor Buildings Systems and does not serve as a licensed professional engineer of record and shall not be construed as such.

SPLICE PLATE & BOLT TABLE										CAP PLATE BOLTS				
Mark	Qty Top	Bot	Int	Type	Dia	Length	Width	Thick	Length	Mark	Qty	Type	Dia	Length
SP−1	4	4	0	A325	0.625	2.25	6”	5/8”	3’−0 1/8”	RF1−8	4	A325	0.625	2.25
SP−2	4	4	0	A325	0.625	2.25	6”	1/2”	2’−5 1/2”					
SP−3	4	4	0	A325	0.625	2.25	6”	1/2”	2’−5 3/4”					
SP−4	4	4	0	A325	0.625	2.25	6”	5/8”	2’−5 1/2”					
SP−5	4	4	0	A325	0.625	2.25	6”	1/2”	3’−0 1/8”					

MEMBER TABLE					
Mark	Web Depth Start/End	Web Plate Thick	Web Plate Length	Outside Flange W x Thk x Length	Inside Flange W x Thk x Length
RF1−1	12.0/34.5	0.150	276.1	6 x 1/4” x 310.7	6 x 5/16” x 277.0
	34.5/34.5	0.220	34.5	8 x 3/8” x 35.5	
RF1−2	30.0/23.3	0.150	145.2	6 x 1/4” x 145.2	6 x 1/4” x 144.1
RF1−3	23.3/23.3	0.150	96.0	6 x 3/8” x 388.6	6 x 5/16” x 388.6
	23.3/23.3	0.150	292.6		
RF1−4	23.3/35.0	0.150	137.3	6 x 3/8” x 351.6	6 x 1/2” x 137.8
	35.0/23.3	0.150	214.3		6 x 1/2” x 214.6
RF1−5	23.3/23.3	0.150	96.0	6 x 5/16” x 334.9	6 x 5/16” x 334.9
	23.3/23.3	0.150	238.9		
RF1−6	23.3/30.0	0.150	144.3	6 x 1/4” x 143.0	6 x 1/4” x 144.4
RF1−7	34.5/34.5	0.220	33.0	8 x 3/8” x 35.5	6 x 5/16” x 219.3
	34.5/12.0	0.150	218.2	6 x 1/4” x 249.8	
RF1−8	P8x188				
EB−3	W9513525				
EB−8	W9513525				

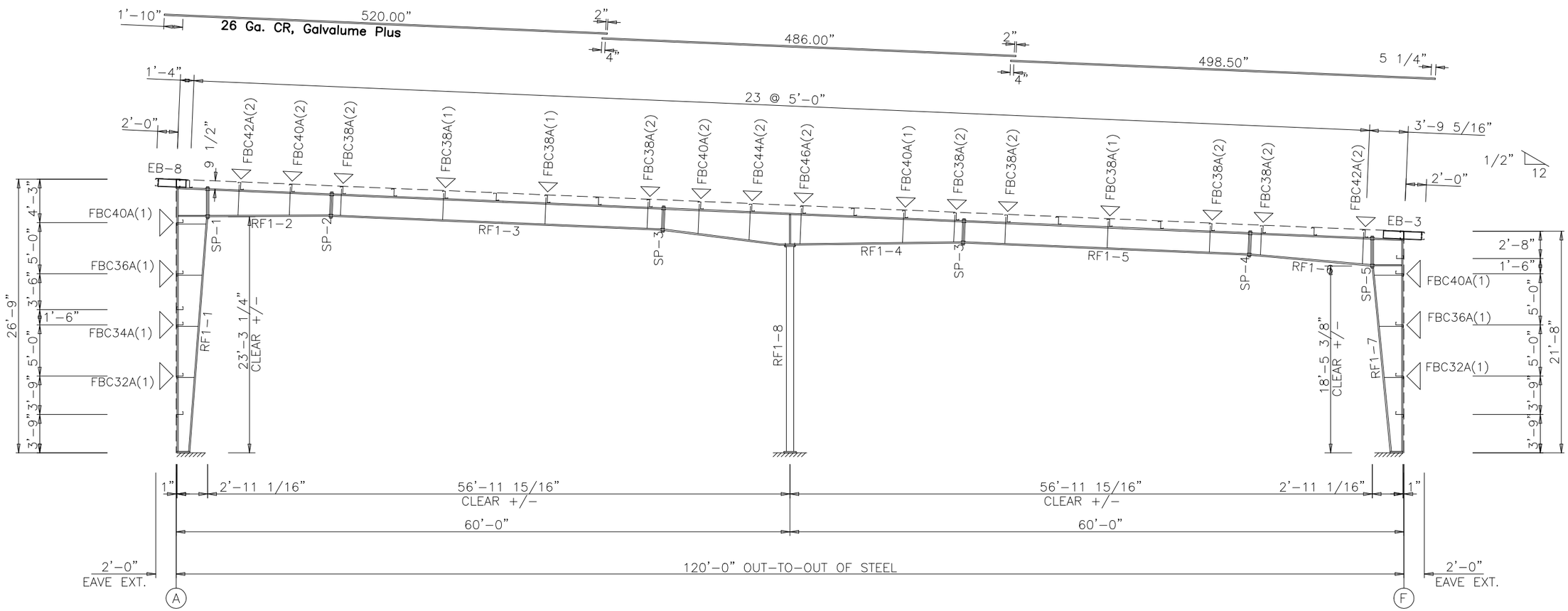

RIGID FRAME ELEVATION: FRAME LINE 2 3 4

GENERAL NOTES

1. ▽ INDICATES FLANGE BRACING LOCATIONS. (1) = ONE SIDE; (2) = TWO SIDES.
2. IF FLANGE BRACING IS REQUIRED ON BOTH SIDES OF AN EXPANDABLE RIGID FRAME, THE OPPOSITE SIDE FLANGE BRACES WILL HAVE TO BE INSTALLED AT THE TIME OF FUTURE EXPANSION. THESE FLANGE BRACES HAVE BEEN PROVIDED, AS REQUIRED, FOR THIS FUTURE CONDITION.
3. RIGID FRAMES SHALL HAVE 50% OF THEIR BOLTS INSTALLED AND TIGHTENED ON BOTH SIDES OF THE WEB ADJACENT TO EACH FLANGE BEFORE THE HOISTING EQUIPMENT IS RELEASED.
4. INTERIOR COLUMN METAL TAG IS ORIENTED TOWARD THE LOW EAVE OF THE BUILDING.

ISSUE	DWN	CHK	ENG	PE	DATE
ANCHOR BOLTS	TDN	MBS	JSA		12/20/2021
PERMITS	TDN	MBS	JSA	KAP	12/24/2021
FINAL ERECTIONS	BDT	MBS	JSA	KAP	1/10/2022

NUCOR BUILDING SYSTEMS
305 INDUSTRIAL PARKWAY, WATERLOO, IN 46793
PHONE: (260) 837-7891 FAX: (260) 837-7384
PO BOX 1006, 200 WHETSTONE RD, SWANSEA, SC 29160
PHONE: (803) 568-2100 FAX: (803) 568-2121
600 APACHE TRAIL, TERRELL, TX 75160
PHONE: (972) 524-0707 FAX: (972) 524-0417
1009 WATER LINE RD, BIRCHWOOD, TN 37308
PHONE: (435) 919-3100 FAX: (435) 919-3101

PROJECT NAME
DBAT SINGLE SLOPE
, LEES SUMMIT, MO 64086

CUSTOMER NAME
MAR BUILDING SOLUTIONS
LEES SUMMIT, MO 64081

SHEET TITLE

JOB NUMBER
T21K0694A

STATE OF MISSOURI
KYLE A. PARSONS
NUMBER PE−2017008513
01/27/2022
PROFESSIONAL ENGINEER

This seal pertains only to the materials designed and supplied by Nucor Building Systems, a division of Nucor Corporation. The drawings and the information contained within this document are the product of Nucor Building Systems. The register professional engineer who affixed his seal on these drawings is employed by Nucor Buildings Systems and does not serve as the overall building engineer of record and shall not be construed as such.

SPLICE PLATE & BOLT TABLE										CAP PLATE BOLTS				
Mark	Qty Top	Bot	Int	Type	Dia	Length	Width	Thick	Length	Mark	Qty	Type	Dia	Length
SP−1	4	4	0	A325	0.625	2.25	1'−0"	1/2"	4'−0 3/8"	RF2−7	4	A325	0.625	2.25
SP−2	4	4	0	A325	0.625	2.25	8"	1/2"	3'−8 5/8"					
SP−3	4	4	0	A325	0.625	2.25	6"	3/8"	3'−8 3/4"					
SP−4	4	4	0	A325	0.875	3.00	6"	5/8"	3'−10"					
SP−5	4	4	0	A325	0.625	2.25	1'−0"	3/8"	4'−0 1/2"					

MEMBER TABLE					
Mark	Web Depth Start/End	Web Plate Thick	Web Plate Length	Outside Flange W x Thk x Length	Inside Flange W x Thk x Length
RF2−1	12.0/46.5	0.188	263.5	12 x 3/8" x 310.7	12 x 3/8" x 265.7
	46.5/46.5	0.275	47.2	12 x 3/8" x 47.7	
RF2−2	42.0/38.0	0.164	133.2	8 x 1/4" x 294.6	8 x 5/16" x 131.5
	38.0/38.0	0.150	161.4		8 x 3/8" x 161.4
RF2−3	38.0/42.0	0.164	137.7	6 x 1/4" x 352.0	6 x 5/8" x 137.7
	42.0/38.0	0.188	214.3		6 x 5/8" x 214.3
RF2−4	38.0/38.0	0.188	160.0	6 x 5/8" x 480.0	6 x 1/2" x 480.0
	38.0/38.0	0.188	320.0		
RF2−5	38.0/42.0	0.164	227.9	6 x 1/2" x 226.1	6 x 5/16" x 227.9
RF2−6	34.5/12.0	0.188	251.1	12 x 3/8" x 35.6	12 x 3/8" x 207.1
				12 x 3/8" x 249.7	
RF2−7	P8x188				
EB−3	W9513525				
EB−8	W9513525				

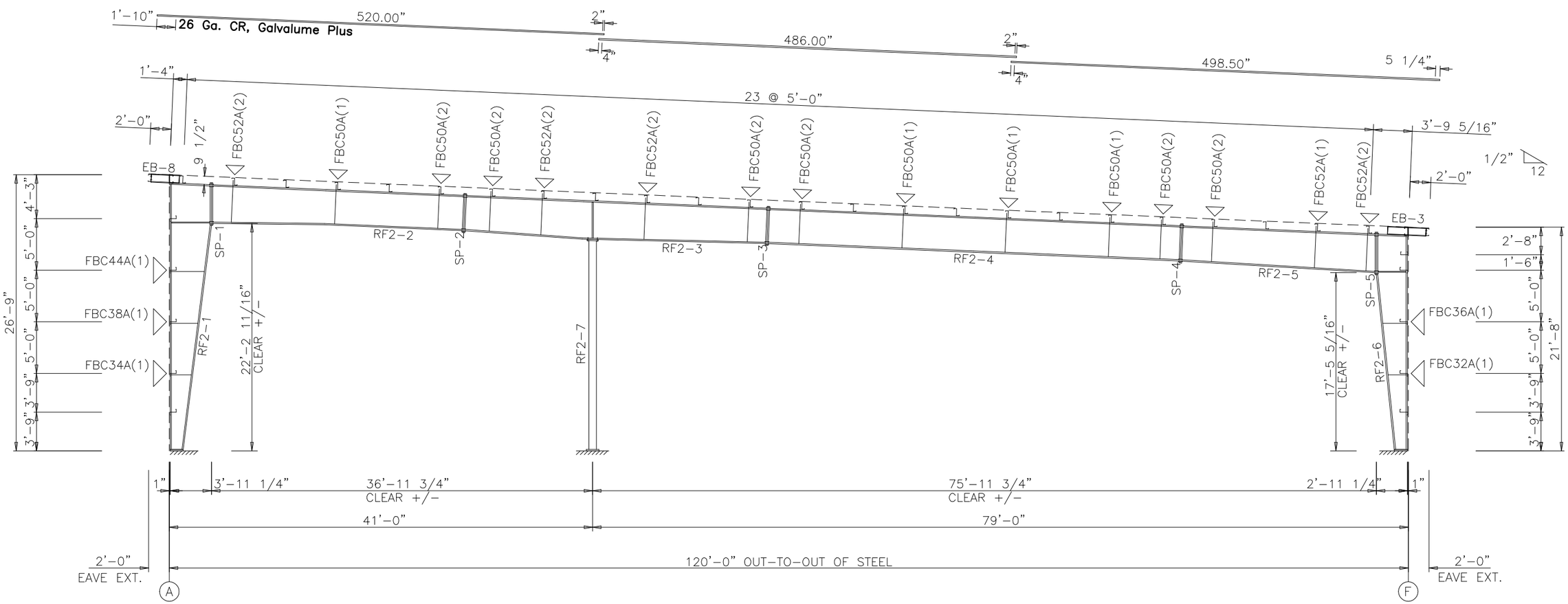

RIGID FRAME ELEVATION: FRAME LINE 5 6

GENERAL NOTES

1. ▽ INDICATES FLANGE BRACING LOCATIONS. (1) = ONE SIDE; (2) = TWO SIDES.
2. IF FLANGE BRACING IS REQUIRED ON BOTH SIDES OF AN EXPANDABLE RIGID FRAME, THE OPPOSITE SIDE FLANGE BRACES WILL HAVE TO BE INSTALLED AT THE TIME OF FUTURE EXPANSION. THESE FLANGE BRACES HAVE BEEN PROVIDED, AS REQUIRED, FOR THIS FUTURE CONDITION.
3. RIGID FRAMES SHALL HAVE 50% OF THEIR BOLTS INSTALLED AND TIGHTENED ON BOTH SIDES OF THE WEB ADJACENT TO EACH FLANGE BEFORE THE HOISTING EQUIPMENT IS RELEASED.
4. INTERIOR COLUMN METAL TAG IS ORIENTED TOWARD THE LOW EAVE OF THE BUILDING.

ISSUE	DWN	CHK	ENG	PE	DATE
ANCHOR BOLTS	TDN	MBS	JSA		12/20/2021
PERMITS	TDN	MBS	JSA	KAP	12/24/2021
FINAL ERECTIONS	BDT	MBS	JSA	KAP	1/10/2022

NUCOR BUILDING SYSTEMS
305 INDUSTRIAL PARKWAY, WATERLOO, IN 46793
PHONE: (260) 837-7891 FAX: (260) 837-7384
PO BOX 1006, 200 WHETSTONE RD, SWANSEA, SC 29160
PHONE: (803) 568-2100 FAX: (803) 568-2121
600 APACHE TRAIL, TERRELL, TX 75160
PHONE: (972) 524-0707 FAX: (972) 524-5417
1005 WESTGATE AVE, BRIGHAM CITY, UT 84302
PHONE: (435) 919-3100 FAX: (435) 919-3101

PROJECT NAME
DBAT SINGLE SLOPE
, LEES SUMMIT, MO 64086

CUSTOMER NAME
MAR BUILDING SOLUTIONS
LEES SUMMIT, MO 64081

JOB NUMBER
T21K0694A

SHEET TITLE

STATE OF MISSOURI
KYLE A. PARSONS
NUMBER
PE−2017008513
01/27/2022
PROFESSIONAL ENGINEER

This seal pertains only to the materials designed and supplied by Nucor Building Systems, a division of Nucor Corporation. The drawings and the information contained therein are the property of Nucor Building Systems. The register professional engineer whose seal appears on these drawings is employed by Nucor Buildings Systems and does not serve as the owner's representative. Any reuse of these drawings shall not be construed as such.

SHEET
E4 of 8

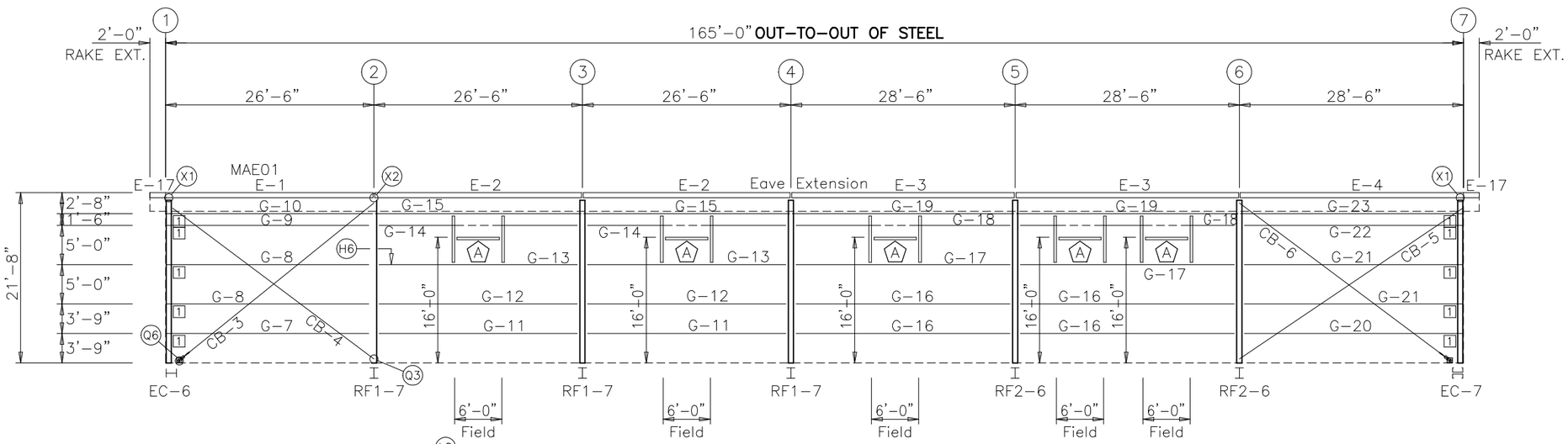

SIDEWALL FRAMING: FRAME LINE F

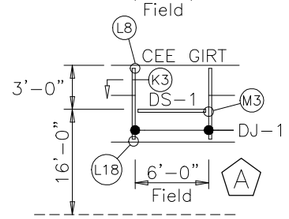

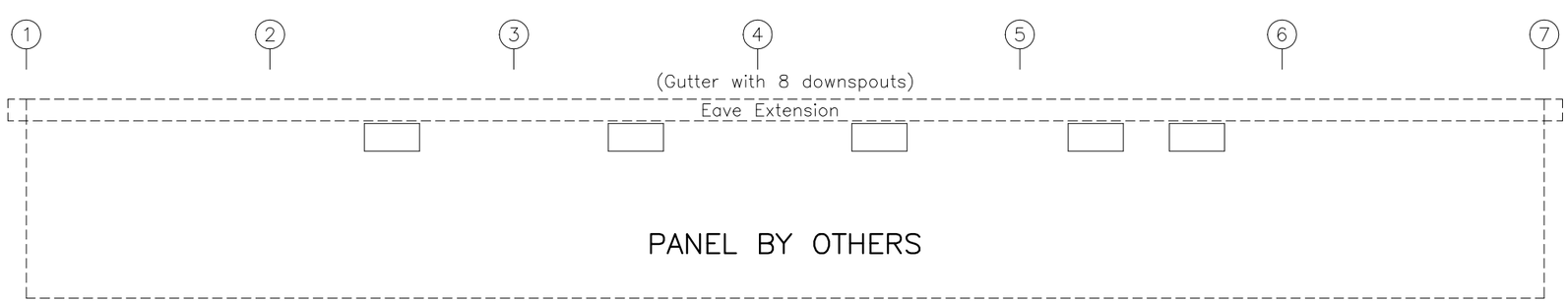

SIDEWALL SHEETING & TRIM: FRAME LINE F

MEMBER TABLE
FRAME LINE F

MARK	PART	LENGTH
DJ-1	J95C060	78.000
DS-1	J95C060	72.000
E-1	95E060	301.000
E-2	95E060	306.000
E-3	95E060	330.000
E-4	95E060	325.000
E-17	95E060	17.000
G-7	95Z067	311.250
G-8	95Z075	311.250
G-9	95Z060	311.250
G-10	95C060	311.250
G-11	95Z067	305.000
G-12	95Z075	305.000
G-13	95Z099	305.000
G-14	95Z060	305.000
G-15	95C089	305.000
G-16	95Z075	329.000
G-17	95Z105	329.000
G-18	95Z060	329.000
G-19	95C099	329.000
G-20	95Z075	335.250
G-21	95Z089	335.250
G-22	95Z067	335.250
G-23	95C060	335.250
CB-3	RD05-	367.000
CB-4	RD05-	404.000
CB-5	RD05-	424.000
CB-6	RD05-	386.000

CONNECTION PLATES
FRAME LINE F

☐ID	MARK/PART
1	GCC03

SIDEWALL FRAMING PLAN

GENERAL NOTES

1. STD. ROD/CABLE SIZES PER PART PREFIX ARE:
   ROD
   RD05- = 5/8" ROD
2. ROD/CABLE BRACING THAT OCCURS IN FLUSH OR INSET GIRT CONDITIONS WILL REQUIRE FIELD SLOTTING OF GIRT WEBS TO ALLOW FOR BRACING.
3. FRAMED OPENINGS WHICH ARE FIELD LOCATED WILL REQUIRE FIELD CUTTING OF GIRTS AND SHEETING.
4. THIS DRAWING IS NOT TO SCALE.

ISSUE	DWN	CHK	ENG	PE	DATE
ANCHOR BOLTS	TDN	MBS	JSA		12/20/2021
PERMITS	TDN	MBS	JSA	KAP	12/24/2021
FINAL ERECTIONS	BDT	MBS	JSA	KAP	1/10/2022

NUCOR BUILDING SYSTEMS
305 INDUSTRIAL PARKWAY, WATERLOO, IN 46793
PHONE: (260) 837-7891 FAX: (260) 837-7384
PO BOX 1006, 200 WHETSTONE RD, SWANSEA, SC 29160
PHONE: (803) 568-2100 FAX: (803) 568-2121
600 APACHE TRAIL, TERRELL, TX 75160
PHONE: (972) 524-0117 FAX: (972) 524-3417
1009 WATERS AVE, BRIGHAM CITY, UT 84302
PHONE: (435) 919-3100 FAX: (435) 919-3101

PROJECT NAME
DBAT SINGLE SLOPE
, LEES SUMMIT, MO 64086

CUSTOMER NAME
MAR BUILDING SOLUTIONS
LEES SUMMIT, MO 64081

SHEET TITLE

JOB NUMBER
T21K0694A

STATE OF MISSOURI
KYLE A. PARSONS
NUMBER
PE-2017008513
01/27/2022
PROFESSIONAL ENGINEER

This seal pertains only to the materials designed and supplied by Nucor Building Systems, a division of Nucor Corporation. The drawings and the materials specified therein, if sealed, are the product of Nucor Building Systems. The register professional engineer who seal and sign on those drawings is employed by Nucor Buildings Systems and does not serve as a registered professional engineer of record and shall not be construed as such.

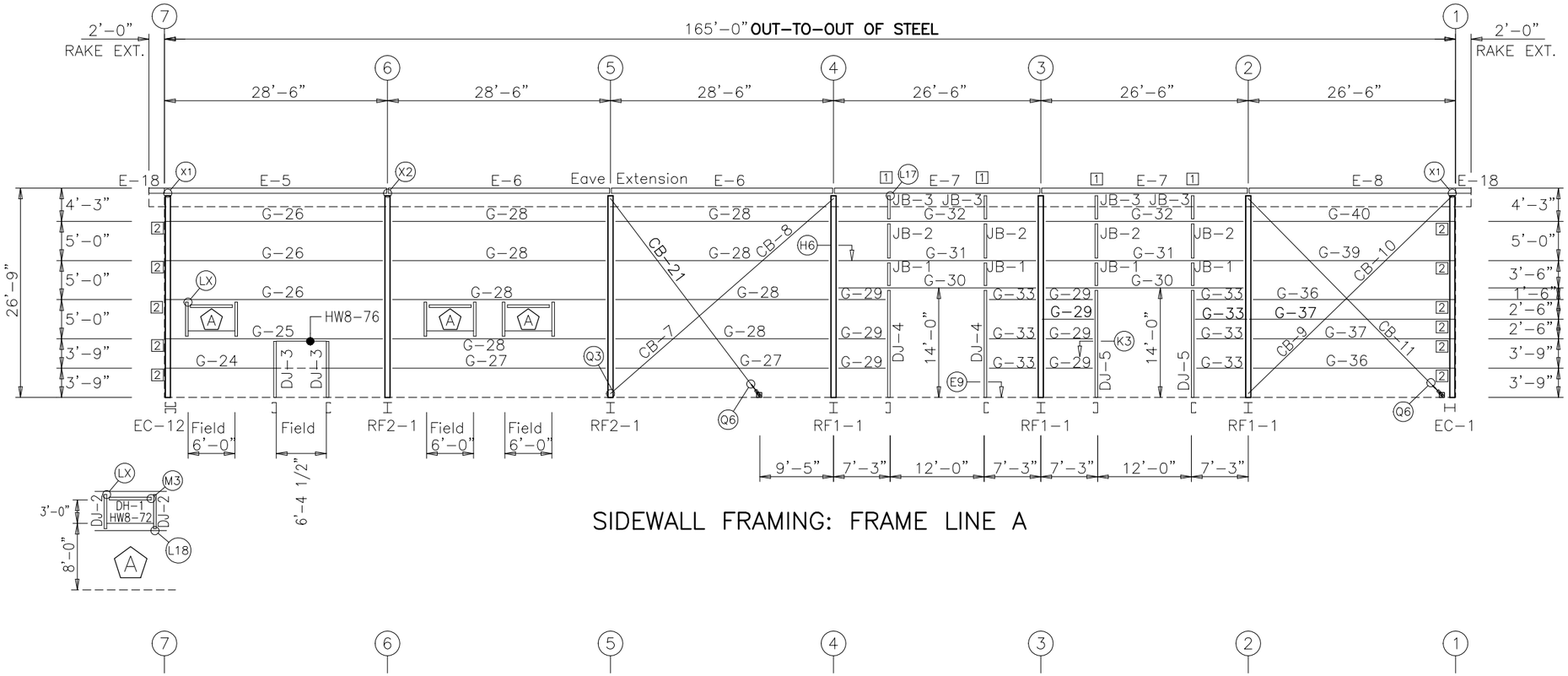

SIDEWALL FRAMING: FRAME LINE A

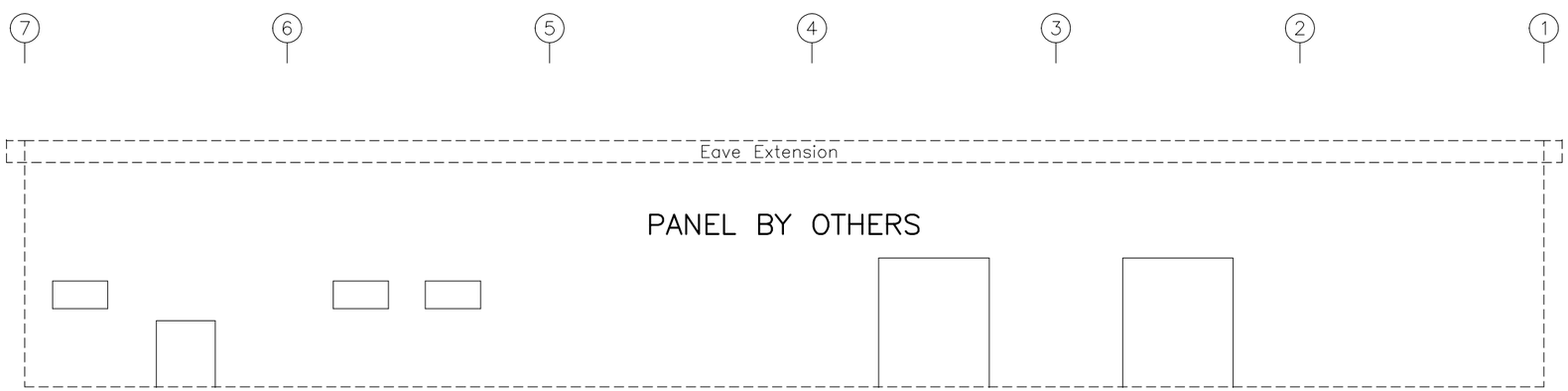

SIDEWALL SHEETING & TRIM: FRAME LINE A

MEMBER TABLE
FRAME LINE A

MARK	PART	LENGTH
DJ-2	J08C060	60.000
DJ-3	J08C060	90.000
DJ-4	J08C060	168.000
DJ-5	J08C060	168.000
DH-1	J08C060	72.000
E-5	95HE060	325.000
E-6	95HE060	330.000
E-7	95HE060	306.000
E-8	95HE060	301.000
E-18	95HE060	17.000
G-24	08Z060	335.250
G-25	08Z105	335.250
G-26	08Z089	335.250
G-27	08Z075	329.000
G-28	08Z089	329.000
G-29	08Z060	77.500
G-30	08C105	305.000
G-31	08Z067	305.000
G-32	08Z075	305.000
G-33	08Z060	77.500
G-36	08Z067	311.250
G-37	08Z060	311.250
G-39	08Z089	311.250
G-40	08Z075	311.250
CB-7	RD05-	430.000
CB-8	RD05-	34.000
CB-9	RD05-	428.000
CB-10	RD05-	16.000
CB-11	RD05-	408.000
CB-21	RD05-	361.000
JB-1	J08C060	42.000
JB-2	J08C060	60.000
JB-3	J08C060	39.500

CONNECTION PLATES
FRAME LINE A

ID	MARK/PART
1	JCE09
2	GCC03

SIDEWALL FRAMING PLAN

GENERAL NOTES

1. STD. ROD/CABLE SIZES PER PART PREFIX ARE:
   ROD
   RD05- = 5/8" ROD
2. ROD/CABLE BRACING THAT OCCURS IN FLUSH OR INSET GIRT CONDITIONS WILL REQUIRE FIELD SLOTTING OF GIRT WEBS TO ALLOW FOR BRACING.
3. FRAMED OPENINGS WHICH ARE FIELD LOCATED WILL REQUIRE FIELD CUTTING OF GIRTS AND SHEETING.
4. THIS DRAWING IS NOT TO SCALE.

ISSUE	DWN	CHK	ENG	PE	DATE
ANCHOR BOLTS	TDN	MBS	JSA		12/20/2021
PERMITS	TDN	MBS	JSA	KAP	12/24/2021
FINAL ERECTIONS	BDT	MBS	JSA	KAP	1/10/2022

NUCOR BUILDING SYSTEMS
305 INDUSTRIAL PARKWAY, WATERLOO, IN 46793
PHONE: (260) 837-7891 FAX: (260) 837-7384
PO BOX 1006, 200 WHETSTONE RD, SWANSEA, SC 29160
PHONE: (803) 568-2100 FAX: (803) 568-2121
600 APACHE TRAIL, TERRELL, TX 75160
PHONE: (972) 524-8417 FAX: (972) 524-3302
1000 WATER STREET, BRIGHAM CITY, UT 84302
PHONE: (435) 919-3100 FAX: (435) 919-3101

PROJECT NAME
DBAT SINGLE SLOPE
, LEES SUMMIT, MO 64086

CUSTOMER NAME
MAR BUILDING SOLUTIONS
LEES SUMMIT, MO 64081

JOB NUMBER
T21K0694A

SHEET TITLE

STATE OF MISSOURI
KYLE A. PARSONS
NUMBER PE-2017008513
01/27/2022
PROFESSIONAL ENGINEER

This seal pertains only to the materials designed and supplied by Nucor Building Systems, a division of Nucor Corporation. The drawings and the materials shown on the drawings represent are the product of Nucor Building Systems. The register professional engineer who has affixed a seal on these drawings is employed by Nucor Buildings Systems and does not serve as or represent the owner of record or shall not be construed as such.

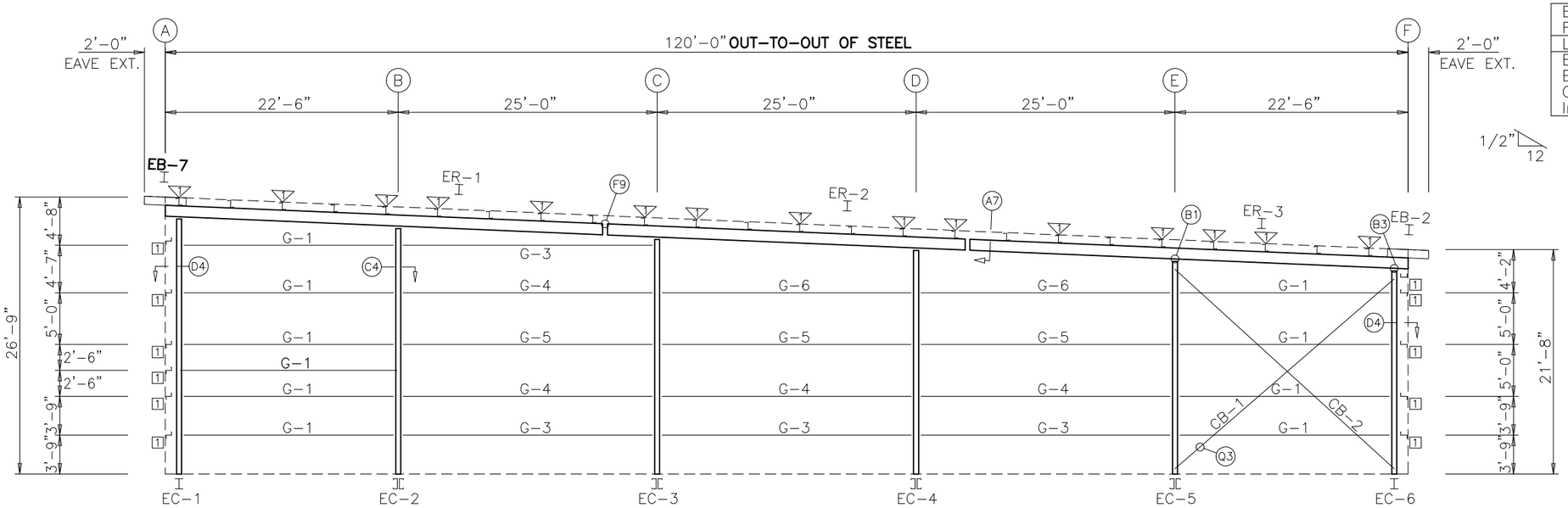

ENDWALL FRAMING: FRAME LINE 1

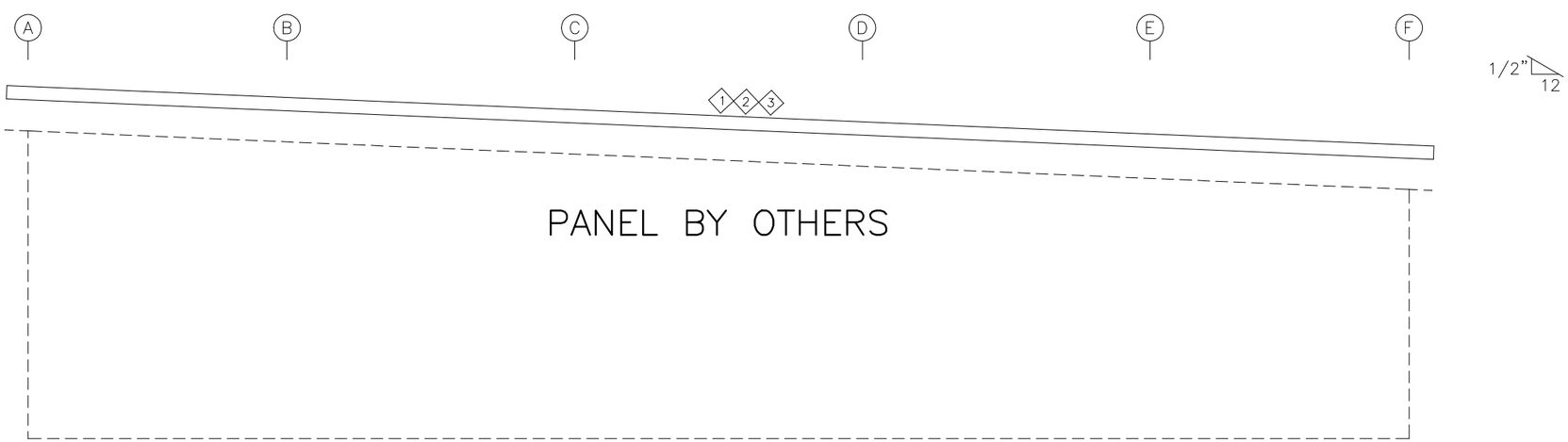

ENDWALL SHEETING & TRIM: FRAME LINE 1

BOLT TABLE
FRAME LINE 1

LOCATION	QUAN	TYPE	DIA	LENGTH
ER-1/ER-2	4	A325	1/2"	2"
ER-2/ER-3	4	A325	1/2"	2"
Cor_Column/Raf	4	A325	1/2"	2"
Int_Column/Raf	6	A325	1/2"	2"

TRIM TABLE
FRAME LINE 1

◇ID	PART	LENGTH	DETAIL
1	RTA01	121.000	
2	RTA02	242.000	
3	RET03	121.000	TRIM_835

MEMBER TABLE
FRAME LINE 1

MARK	PART	LENGTH
EB-2	W9513525	45.500
EB-7	W9513525	33.250
EC-1	W8x10	300.875
EC-2	W08SD099	290.063
EC-3	W08SD099	277.375
EC-4	W08SD089	264.625
EC-5	W08SD089	251.938
EC-6	W8x10	241.250
ER-1	W10x15	509.438
ER-2	W10x15	420.250
ER-3	W10x15	510.688
G-1	08Z060	241.000
G-3	08Z060	287.000
G-4	08Z067	287.000
G-5	08Z075	287.000
G-6	08Z089	287.000
CB-1	RD05-	349.000
CB-2	RD05-	356.000

FLANGE BRACE TABLE
FRAME LINE 1

▽ ID	# SIDES	MARK	
1	1	FBC30	

CONNECTION PLATES
FRAME LINE 1

☐ID	MARK/PART
1	GCC03

ENDWALL FRAMING PLAN

GENERAL NOTES

1. STD. ROD/CABLE SIZES PER PART PREFIX ARE:
   ROD
   RD05- = 5/8" ROD
2. ROD/CABLE BRACING THAT OCCURS IN FLUSH OR INSET GIRT CONDITIONS WILL REQUIRE FIELD SLOTTING OF GIRT WEBS TO ALLOW FOR BRACING.
3. FRAMED OPENINGS WHICH ARE FIELD LOCATED WILL REQUIRE FIELD CUTTING OF GIRTS AND SHEETING.
4. THIS DRAWING IS NOT TO SCALE.

ISSUE	DWN	CHK	ENG	PE	DATE
ANCHOR BOLTS	TDN	MBS	JSA		12/20/2021
PERMITS	TDN	MBS	JSA	KAP	12/24/2021
FINAL ERECTIONS	BDT	MBS	JSA	KAP	1/10/2022

NUCOR BUILDING SYSTEMS
305 INDUSTRIAL PARKWAY, WATERLOO, IN 46793
PHONE: (260) 837-7891 FAX: (260) 837-7384
PO BOX 1006, 200 WHETSTONE RD, SWANSEA, SC 29160
PHONE: (803) 568-2100 FAX: (803) 568-2121
600 APACHE TRAIL, TERRELL, TX 75160
PHONE: (972) 524-0117 FAX: (972) 524-3417
1005 WATERS AVE, BRIGHAM CITY, UT 84302
PHONE: (435) 919-3100 FAX: (435) 919-3101

PROJECT NAME
DBAT SINGLE SLOPE
, LEES SUMMIT, MO 64086

CUSTOMER NAME
MAR BUILDING SOLUTIONS
LEES SUMMIT, MO 64081

JOB NUMBER
T21K0694A

SHEET TITLE

STATE OF MISSOURI
KYLE A. PARSONS
NUMBER
PE-2017008513
01/27/2022
PROFESSIONAL ENGINEER

This seal pertains only to the materials designed and supplied by Nucor Building Systems, a division of Nucor Corporation. The drawings and the calculations contained therein are the property of Nucor Building Systems. The register professional engineer who seals and signs these drawings is employed by Nucor Buildings Systems and does not serve as or represent the owner/owner of record and shall not be construed as such.

SHEET
E7 of 8

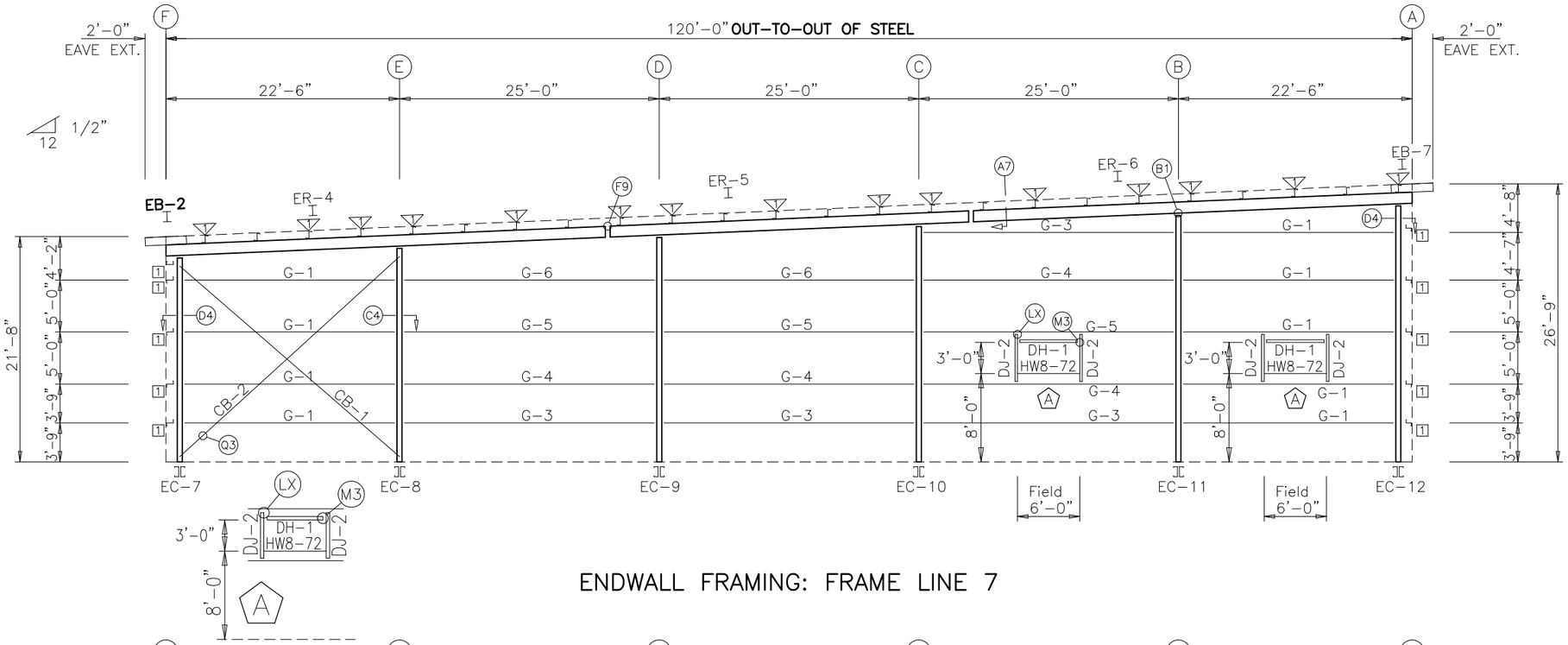

ENDWALL FRAMING: FRAME LINE 7

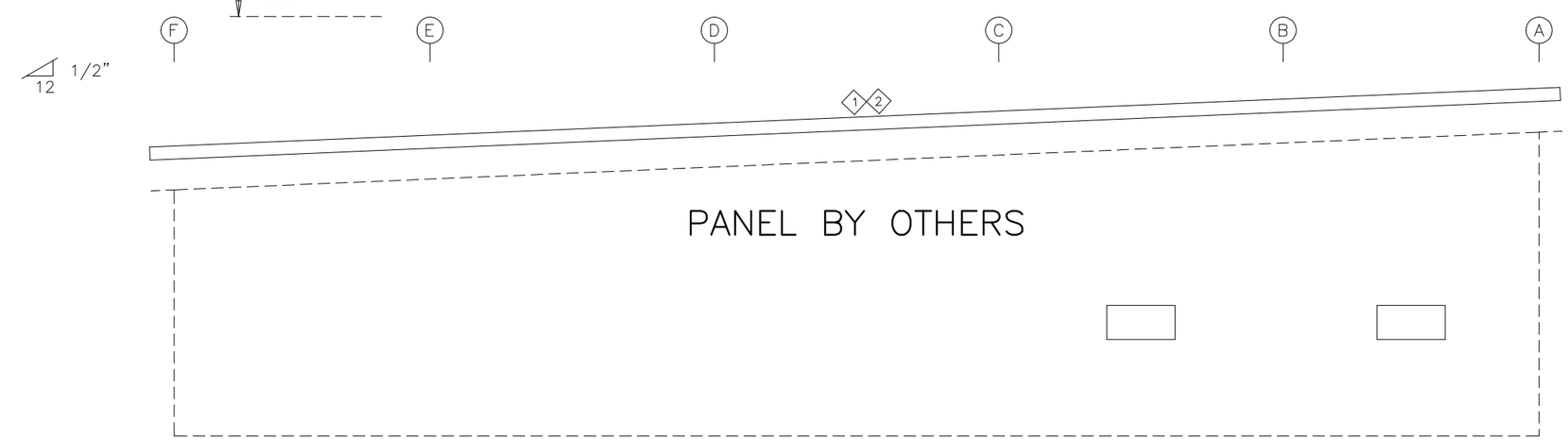

ENDWALL SHEETING & TRIM: FRAME LINE 7

BOLT TABLE FRAME LINE 7				
LOCATION	QUAN	TYPE	DIA	LENGTH
ER-4/ER-5	4	A325	1/2"	2"
ER-5/ER-6	4	A325	1/2"	2"
Columns/Raf	6	A325	1/2"	2"

TRIM TABLE FRAME LINE 7			
◇ID	PART	LENGTH	DETAIL
1	RTA02	242.000	
2	RET03	121.000	TRIM_835

MEMBER TABLE FRAME LINE 7		
MARK	PART	LENGTH
EB-2	W9513525	45.500
EB-7	W9513525	33.250
EC-7	W08SD075	241.188
EC-8	W08SD089	251.938
EC-9	W08SD089	264.625
EC-10	W08SD099	277.375
EC-11	W08SD099	290.063
EC-12	W08SD075	300.813
ER-4	W10x15	510.688
ER-5	W10x15	420.250
ER-6	W10x15	509.438
DJ-2	J08C060	60.000
DH-1	J08C060	72.000
G-1	08Z060	241.000
G-3	08Z060	287.000
G-4	08Z067	287.000
G-5	08Z075	287.000
G-6	08Z089	287.000
CB-1	RD05-	349.000
CB-2	RD05-	356.000

FLANGE BRACE TABLE FRAME LINE 7			
▽ ID	# SIDES	MARK	
1	1	FBC30	

CONNECTION PLATES FRAME LINE 7	
□ID	MARK/PART
1	GCC03

ENDWALL FRAMING PLAN

GENERAL NOTES

1. STD. ROD/CABLE SIZES PER PART PREFIX ARE:
   ROD
   RD05- = 5/8" ROD
2. ROD/CABLE BRACING THAT OCCURS IN FLUSH OR INSET GIRT CONDITIONS WILL REQUIRE FIELD SLOTTING OF GIRT WEBS TO ALLOW FOR BRACING.
3. FRAMED OPENINGS WHICH ARE FIELD LOCATED WILL REQUIRE FIELD CUTTING OF GIRTS AND SHEETING.
4. THIS DRAWING IS NOT TO SCALE.

ISSUE	DWN	CHK	ENG	PE	DATE
ANCHOR BOLTS	TDN	MBS	JSA		12/20/2021
PERMITS	TDN	MBS	JSA	KAP	12/24/2021
FINAL ERECTIONS	BDT	MBS	JSA	KAP	1/10/2022

NUCOR BUILDING SYSTEMS
305 INDUSTRIAL PARKWAY, WATERLOO, IN 46793
PHONE: (260) 837-7891 FAX: (260) 837-7384
PO BOX 1006, 200 WHETSTONE RD, SWANSEA, SC 29160
PHONE: (803) 568-2100 FAX: (803) 568-2121
600 APACHE TRAIL, TERRELL, TX 75160
PHONE: (972) 524-9417 FAX: (972) 524-3302
1005 W. WALNUT, BRIGHAM CITY, UT 84302
PHONE: (435) 919-3100 FAX: (435) 919-3101

PROJECT NAME
DBAT SINGLE SLOPE
, LEES SUMMIT, MO 64086

CUSTOMER NAME
MAR BUILDING SOLUTIONS
LEES SUMMIT, MO 64081

JOB NUMBER
T21K0694A

SHEET TITLE

STATE OF MISSOURI
KYLE A. JARSONS
NUMBER PE-2017008513
01/27/2022
PROFESSIONAL ENGINEER

This seal pertains only to the materials designed and supplied by Nucor Building Systems, a division of Nucor Corporation. The drawings and the materials which they represent are the product of Nucor Building Systems. The register professional engineer whose seal appears on these drawings is employed by Nucor Buildings Systems and does not serve as a guarantor that the proved drawings are record and shall not be construed as such.

SHEET
E8 of 8

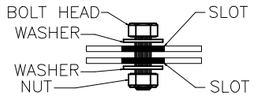

SLOT TO SLOT CONNECTIONS

WASHERS ARE REQUIRED ON BOTH SIDES OF MATERIAL IF SLOTS ARE USED ON BOTH SIDES (NOTE LAPPED ZEE MEMBER EXCEPTION).

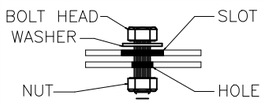

SLOT TO HOLE CONNECTIONS

ONE WASHER REQUIRED ON SLOTTED SIDE ONLY.

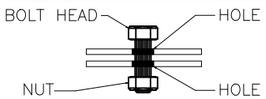

HOLE TO HOLE CONNECTIONS

NO WASHERS ARE REQUIRED WHEN SLOTS ARE NOT USED.

WASHER PART NUMBERS

H0200 – 1/2" FLAT WASHER	H0240 – 1" FLAT WASHER
H0210 – 5/8" FLAT WASHER	H0250 – 1 1/8" FLAT WASHER
H0220 – 3/4" FLAT WASHER	H0260 – 1 1/4" FLAT WASHER
H0230 – 7/8" FLAT WASHER	

TYPICAL WASHER REQUIREMENTS ERECTOR NOTE

(UNLESS NOTED OTHERWISE ON DRAWINGS)

NAA0030

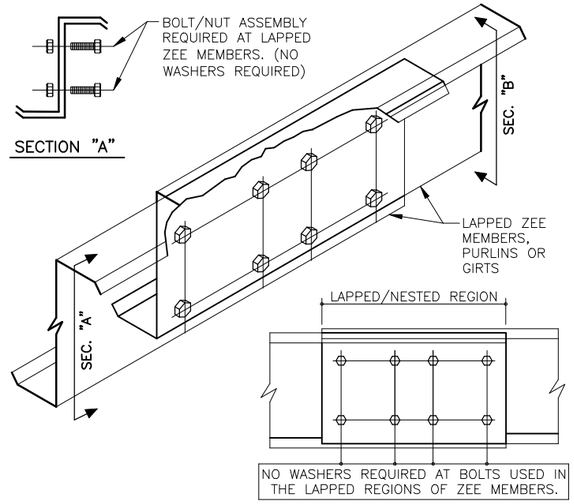

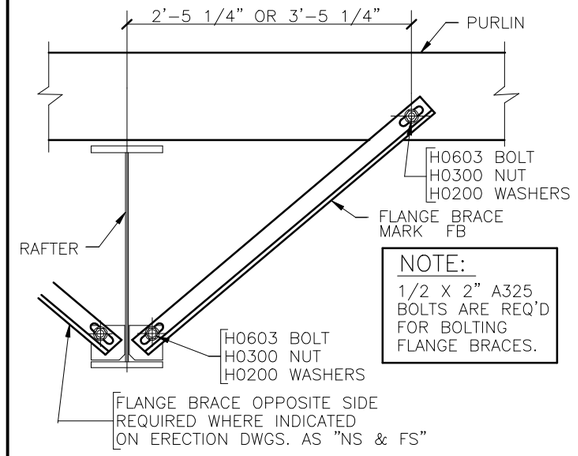

TYP FLANGE BRACE @ PURLIN & RAFTER

NOTE: SEE PLANS AND ELEVATIONS FOR FLANGE BRACE PART MARKS

NAG0010

AG0010

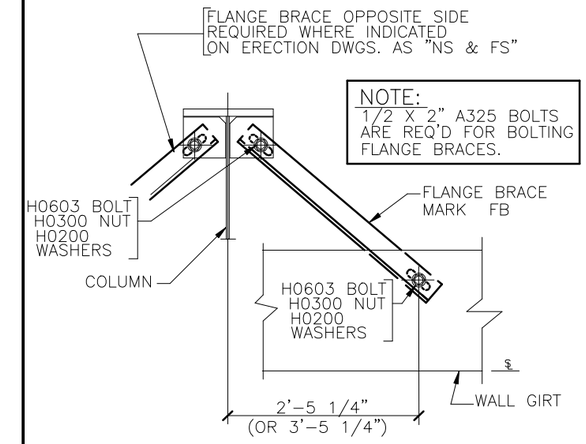

TYP FLANGE BRACE @ BU COL & GIRT

NOTE: SEE PLANS AND ELEVATIONS FOR FLANGE BRACE PART MARKS

NAG0030

AG0030

ISSUE	DWN	CHK	ENG	PE	DATE
ANCHOR BOLTS	TDN	MBS	JSA	KAP	12/20/2021
PERMITS	TDN	MBS	JSA	KAP	12/24/2021
FINAL ERECTIONS	BDT	MBS	JSA	KAP	1/10/2022

NUCOR BUILDING SYSTEMS
305 INDUSTRIAL PARKWAY, WATERLOO, IN 46793
PHONE: (260) 837-7891 FAX: (260) 837-7384
PO BOX 1006, 200 WHETSTONE RD, SWANSEA, SC 29160
PHONE: (803) 568-2100 FAX: (803) 568-2121
600 APACHE TRAIL, TERRELL, TX 75160
PHONE: (972) 524-4417 FAX: (972) 524-3302
1005 WATER STREET, BRIGHAM CITY, UT 84302
PHONE: (435) 919-3100 FAX: (435) 919-3101

TYPICAL FIELD WELD REQUIREMENTS ERECTOR NOTE:

(UNLESS NOTED OTHERWISE ON DRAWINGS)

ALL FIELD WELDING **MUST BE PERFORMED BY AWS/CWB CERTIFIED WELDERS WHO ARE QUALIFIED** FOR THE WELDING PROCESSES AND POSITIONS INDICATED.

ALL WORK MUST BE **COMPLETED AND INSPECTED IN ACCORDANCE WITH THE APPLICABLE AWS/CWB SPECIFICATIONS.**

WELD ELECTRODES USED FOR THE SMAW (OR STICK) WELD PROCESS **MUST BE 70 KSI/483 MPa MATERIAL AND LOW HYDROGEN CONTENT.**

GALVANIZED STEEL FIELD WELDING RECOMMENDATIONS

PREPARATION OF WELD AREA

AWS D-19.0, WELDING ZINC COATED STEEL, CALLS FOR WELDS TO BE MADE ON STEEL THAT IS FREE OF ZINC IN THE AREA TO BE WELDED. FOR GALVANIZED STRUCTURAL COMPONENTS, THE ZINC COATING SHOULD BE REMOVED AT LEAST ONE TO FOUR INCHES (2.5-10 cm) FROM EITHER SIDE OF THE INTENDED WELD ZONE AND ON BOTH SIDES OF THE WORKPIECE. GRINDING BACK THE ZINC COATING IS THE PREFERRED AND MOST COMMON METHOD; BURNING THE ZINC AWAY OR PUSHING BACK THE MOLTEN ZINC FROM THE WELD AREA ARE ALSO EFFECTIVE.

TOUCH-UP OF WELD AREA

WELDING ON GALVANIZED SURFACES DESTROYS THE ZINC COATING ON AND AROUND THE WELD AREA. RESTORATION OF THE AREA WILL BE PERFORMED IN ACCORDANCE WITH ASTM A 780, STANDARD PRACTICE FOR REPAIR OF DAMAGED AND UNCOATED AREAS OF HOT-DIP GALVANIZED COATINGS, WHICH SPECIFIES THE USE OF PAINTS CONTAINING ZINC DUST, ZINC-BASED SOLDERS OR SPRAYED ZINC. ALL TOUCHUP AND REPAIR METHODS ARE CAPABLE OF BUILDING A PROTECTIVE LAYER TO THE THICKNESS REQUIRED BY ASTM A 780.

SAFETY & HEALTH

WHEN WELDING DIRECTLY ON GALVANIZED STEEL IS UNAVOIDABLE, OSHA PERMISSIBLE EXPOSURE LIMITS (PELS) MAY BE EXCEEDED AND EVERY PRECAUTION, INCLUDING HIGH-VELOCITY CIRCULATING FANS WITH FILTERS, AIR RESPIRATORS AND FUME-EXTRACTION SYSTEMS SUGGESTED BY AWS, SHOULD BE EMPLOYED. FUMES FROM WELDING GALVANIZED STEEL CAN CONTAIN ZINC, IRON, AND LEAD. FUME COMPOSITION TYPICALLY DEPENDS ON THE COMPOSITION OF THE MATERIALS USED, AS WELL AS THE HEAT APPLIED BY THE PARTICULAR WELDING PROCESS. IN ANY EVENT, GOOD VENTILATION MINIMIZES THE AMOUNT OF EXPOSURE TO FUMES.

PRIOR TO WELDING ON ANY METAL, CONSULT ANSI/ASC Z-49.1, SAFETY IN WELDING, CUTTING AND ALLIED PROCESSES, WHICH CONTAINS INFORMATION ON THE PROTECTION OF PERSONNEL AND THE GENERAL AREA, VENTILATION AND FIRE PREVENTION.

INFORMATION COURTESY OF AMERICAN GALVANIZERS ASSOCIATION

TYPICAL FIELD WELD REQUIREMENTS

NAA0040

ERECTOR NOTE:
WHEN SLOT REINFORCEMENT PLATES ARE PRESENT IN 12" COLD-FORMED MEMBERS, ROD/CABLE BRACE MUST UTILIZE REINFORCED SLOT LOCATION.

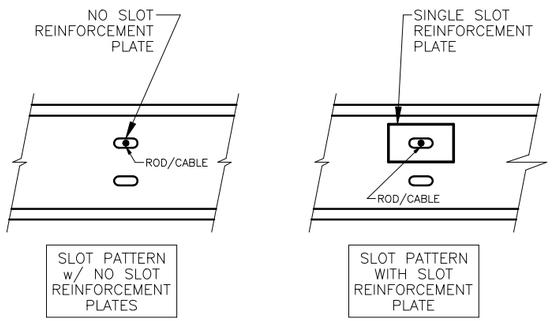

12" COLD-FORMED MEMBER

ROD DIAMETER	MARK NUMBER	HILLSIDE WASHERS	FLAT WASHERS	A307/A325 NUTS	COUPLING NUTS
5/8" ø	RD05-__	(2) H0930	(2) H0210	(2) H0310	H0810
3/4" ø	RD06-__	(2) H0930	(2) H0220	(2) H0320	H0820
7/8" ø	RD07-__	(2) H0930	(2) H0230	(2) H0325	H0830
1" ø	RD08-__	(2) H0960	(2) H0240	(2) H0330	H0840
1 1/8" ø	RD09-__	(2) H0960	(2) H0250	(2) H0450	H0850
1 1/4" ø	RD10-__	(2) H0960	(2) H0260	(2) H0340	H0860

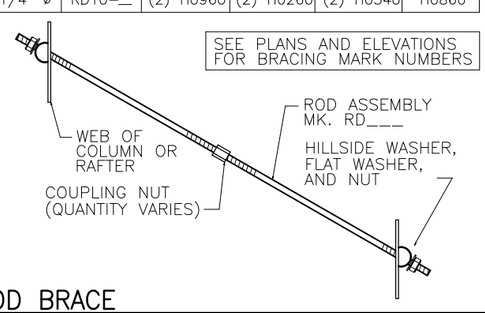

ROD BRACE

WEB TO WEB

Q3

AF0010

ROD DIAMETER	MARK NUMBER	HILLSIDE WASHERS	FLAT WASHERS	A307/A325 NUTS	PADDLE BRACE	COUPLING NUTS
5/8" ø	RD05-_	(1) H0930	(1) H0210	(1) H0310	(1) BCS07	(1) H0810
3/4" ø	RD06-_	(1) H0930	(1) H0220	(1) H0320	(1) BCS08	(1) H0820
7/8" ø	RD07-_	(1) H0930	(1) H0230	(1) H0325	(1) BCS09	(1) H0830
1" ø	RD08-_	(1) H0960	(1) H0240	(1) H0330	(1) BCL06	(1) H0840
1 1/8" ø	RD09-_	(1) H0960	(1) H0250	(1) H0450	(1) BCL03	(1) H0850
1 1/4" ø	RD10-_	(1) H0960	(1) H0260	(1) H0340	(1) BCL04	(1) H0860

PADDLE BRACE BOLT, NUT, AND T-CLIP PART NUMBERS				
ROD DIAMETER	BOLT DIAMETER AND LENGTH	A325 BOLTS	A325 NUTS	T-CLIPS
5/8" - 7/8"	(1) 1" x 3 1/4"	(1) H0640	(1) H0330	(1) BCC01
1" - 1 1/4"	(1) 1 1/4" x 3 1/2"	(1) H0660	(1) H0340	(1) BCC02

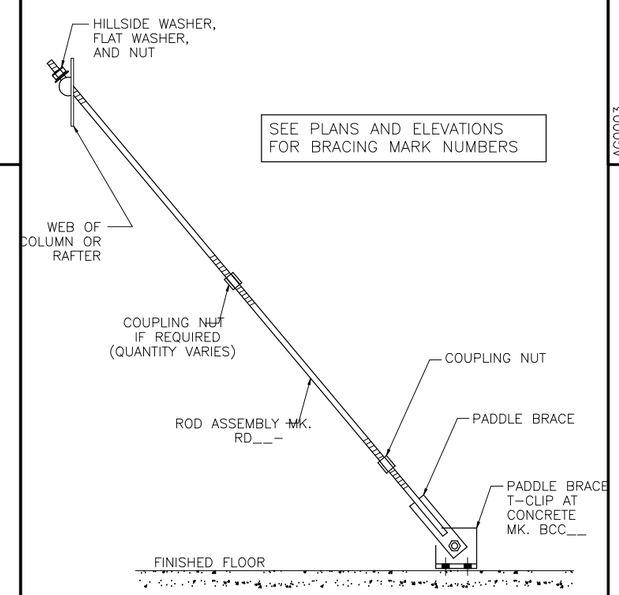

ROD BRACE DETAIL

WEB to FLOOR

Q6

AF0040

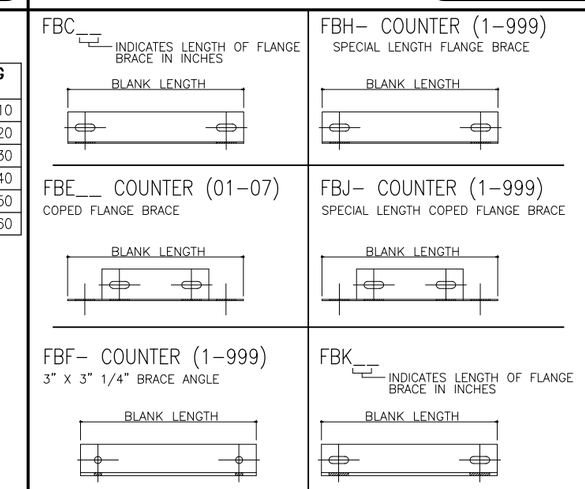

FLANGE BRACE MARK NUMBERS

NAG0003

AG0003

PROJECT NAME
DBAT SINGLE SLOPE
, LEES SUMMIT, MO 64086

CUSTOMER NAME
MAR BUILDING SOLUTIONS
LEES SUMMIT, MO 64081

SHEET TITLE

JOB NUMBER
T21K0694A

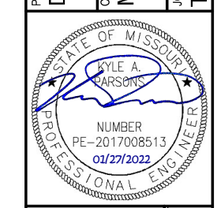

This seal pertains only to the materials designed and supplied by Nucor Building Systems, a division of Nucor Corporation. The drawings and the materials, goods or services described herein are the product of Nucor Building Systems. The register professional engineer who has affixed his seal to these drawings is employed by Nucor Buildings Systems and does not serve as a consultant to the owner/designer of record and shall not be construed as such.

SHEET
D1 of 8

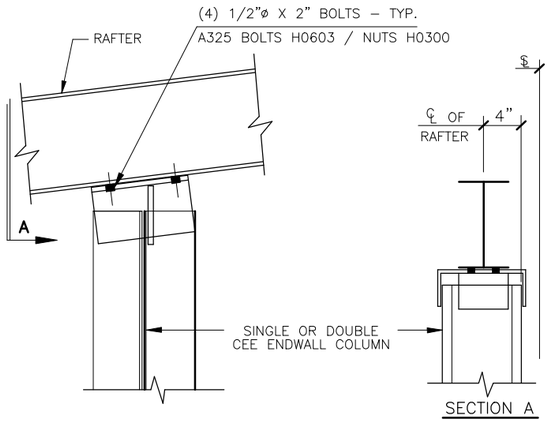

ENDWALL COLUMN TO RAFTER

COLD-FORMED COLUMN TO BUILT-UP or HOT-ROLLED RAFTER

REFERENCE ERECTOR NOTE FOR TYPICAL WASHER REQUIREMENTS

B1

AB0090

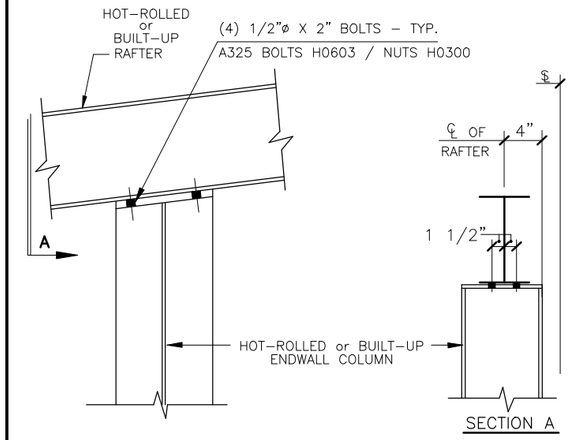

ENDWALL COLUMN TO RAFTER

HOT-ROLLED or BUILT-UP COLUMN to RAFTER

REFERENCE ERECTOR NOTE FOR TYPICAL WASHER REQUIREMENTS

B3

AB0090

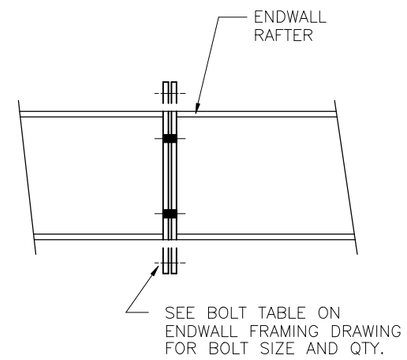

ENDWALL RAFTER SPLICE

BUILT-UP OR HOT-ROLLED RAFTER

REFERENCE ERECTOR NOTE FOR TYPICAL WASHER REQUIREMENTS

F9

AC0170

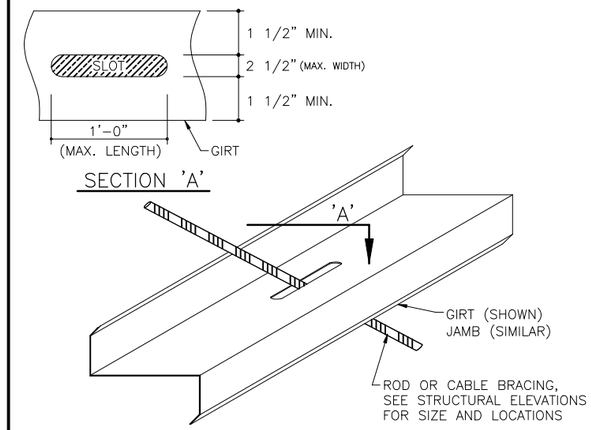

GUIDELINES FOR FIELD SLOTTING SECONDARY WEBS AT INSET/FLUSH CONDITIONS

FIELD SLOT

AF0080

ISSUE	DWN	CHK	ENG	PE	DATE
ANCHOR BOLTS	TDN	MBS	JSA		12/20/2021
PERMITS	TDN	MBS	JSA	KAP	12/24/2021
FINAL ERECTIONS	BDT	MBS	JSA	KAP	1/10/2022

NUCOR BUILDING SYSTEMS
305 INDUSTRIAL PARKWAY, WATERLOO, IN 46793
PHONE: (260) 837-7891 FAX: (260) 837-7384
PO BOX 1006, 200 WHETSTONE RD, SWANSEA, SC 29160
PHONE: (803) 568-2100 FAX: (803) 568-2121
600 APACHE TRAIL, TERRELL, TX 75160
PHONE: (972) 524-0117 FAX: (972) 524-5417
1005 WESTPORT AVE, BRIGHAM CITY, UT 84302
PHONE: (435) 919-3100 FAX: (435) 919-3101

PROJECT NAME
DBAT SINGLE SLOPE
, LEES SUMMIT, MO 64086

CUSTOMER NAME
MAR BUILDING SOLUTIONS
LEES SUMMIT, MO 64081

JOB NUMBER
T21K0694A

SHEET TITLE

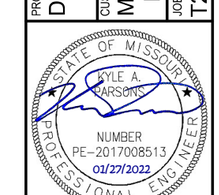

This seal pertains only to the materials designed and supplied by Nucor Building Systems, a division of Nucor Corporation. The drawings and the information contained therein are the property of Nucor Building Systems. The register professional engineer whose seal appears on these drawings is employed by Nucor Buildings Systems and does not serve as a consultant to the owner of record and shall not be construed as such.

SHEET

D2 of 8

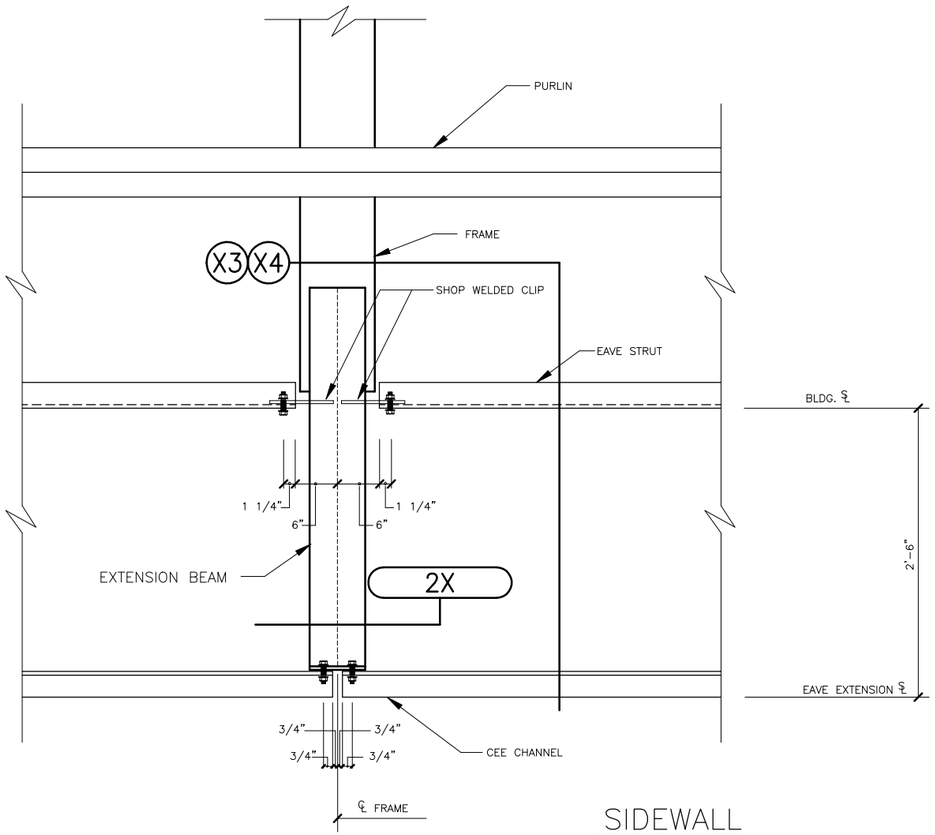

SIDEWALL

INTERIOR EAVE EXTENSION

BUILT-UP OR HOT-ROLLED EXTENSION BEAM
USE 1/2" x 2" A325 BOLTS H0603/NUTS H0300 (U.N.O.)

REFERENCE ERECTOR NOTE FOR TYPICAL WASHER REQUIREMENTS

X2

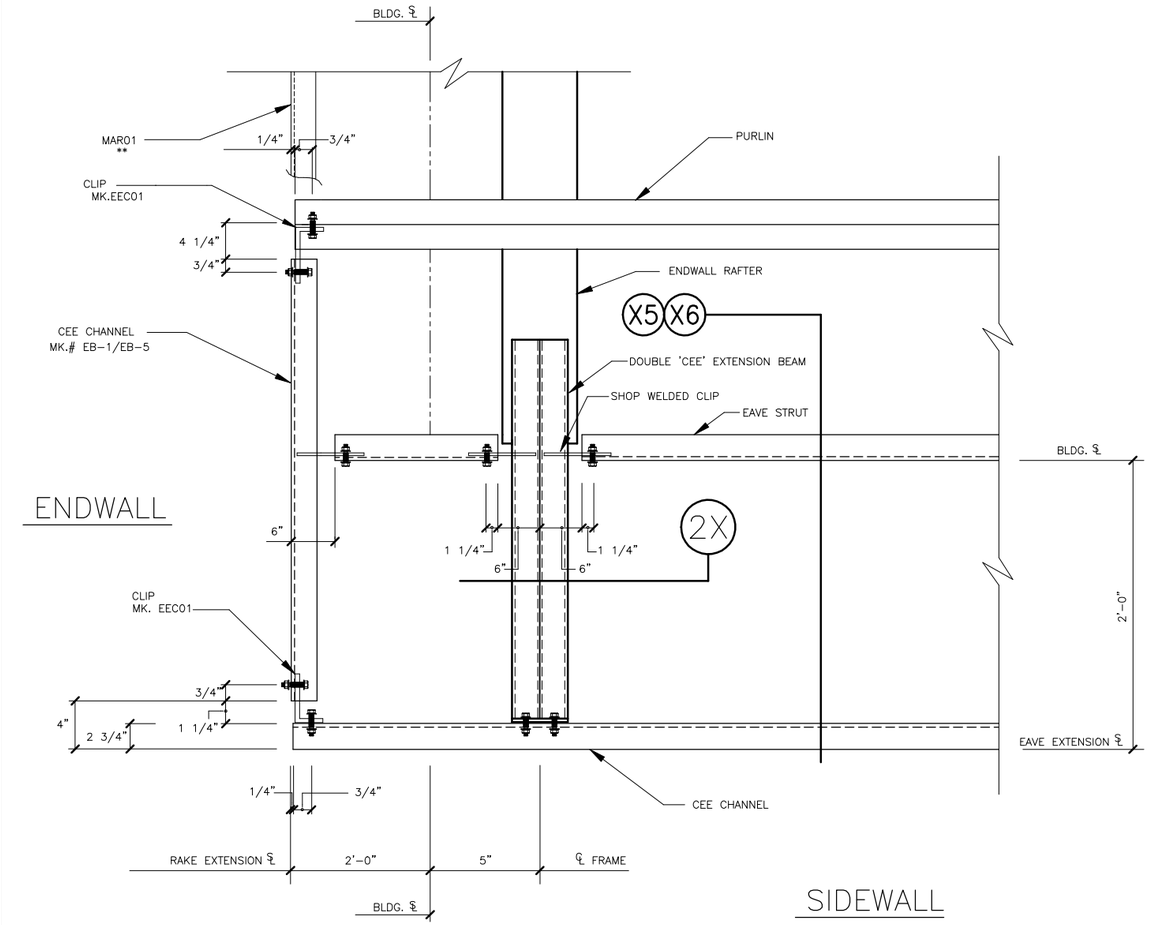

ENDWALL

SIDEWALL

EAVE & GABLE EXTENSION

ENDWALL w/ HOT ROLL/BUILT-UP EXTENSION BEAM
USE 1/2" x 2" A325 BOLTS H0603/NUTS H0300 (U.N.O.)
** EXTEND MAR01 ANGLE TO EXTENSION STEEL LINE
REFERENCE ERECTOR NOTE FOR TYPICAL WASHER REQUIREMENTS

X1

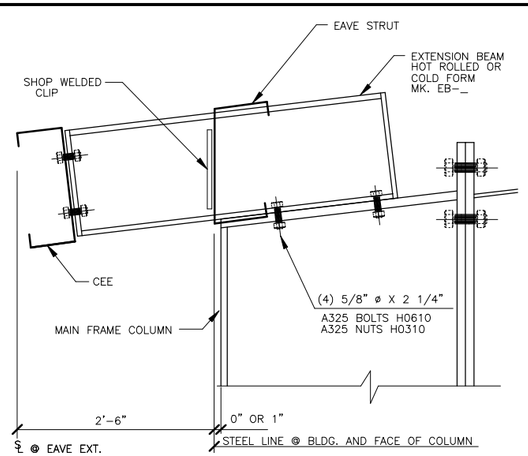

LOW EAVE EXTENSION

INSET OR FLUSH GIRTS AT INTERMEDIATE FRAMES
USE 1/2" x 2" A325 BOLTS H0603 / NUTS H0300 U.N.O.
REFERENCE ERECTOR NOTE FOR TYPICAL WASHER REQUIREMENTS

X3

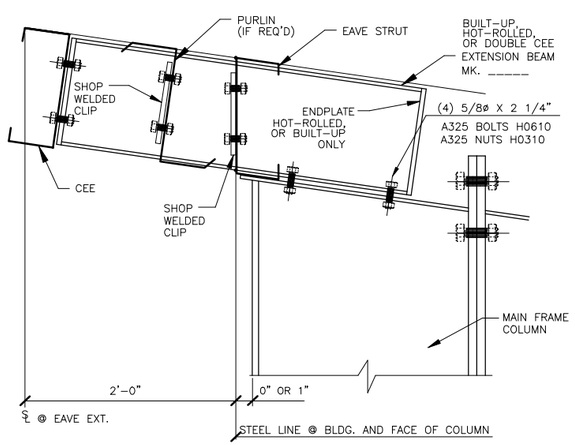

AN0085

HIGH EAVE EXTENSION AT RIGID FRAME

FLUSH GIRTS AT INTERMEDIATE FRAMES
USE 1/2" x 2" A325 BOLTS H0603/NUTS H0300 U.N.O.
REFERENCE ERECTOR NOTE FOR TYPICAL WASHER REQUIREMENTS

X4

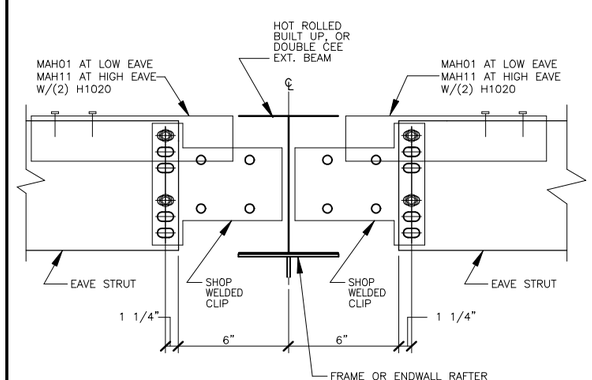

EAVE STRUT AT EXTENSION BEAM

USE (4) 1/2" x 2" A325 BOLTS H0603 / NUTS H0300
REFERENCE ERECTOR NOTE FOR TYPICAL WASHER REQUIREMENTS

2X

ISSUE	DWN	CHK	ENG	PE	DATE
ANCHOR BOLTS	TDN	MBS	JSA		12/20/2021
PERMITS	TDN	MBS	JSA	KAP	12/24/2021
FINAL ERECTIONS	BDT	MBS	JSA	KAP	1/10/2022

NUCOR BUILDING SYSTEMS
305 INDUSTRIAL PARKWAY, WATERLOO, IN 46793
PHONE: (260) 837-7891 FAX: (260) 837-7384
PO BOX 1006, 200 WHETSTONE RD, SWANSEA, SC 29160
PHONE: (803) 568-2100 FAX: (803) 568-2121
600 APACHE TRAIL, TERRELL, TX 75160
PHONE: (972) 524-0707 FAX: (972) 524-5417
1000 WESTGATE AVE, BRIGHAM CITY, UT 84302
PHONE: (435) 919-3100 FAX: (435) 919-3101

PROJECT NAME
DBAT SINGLE SLOPE
, LEES SUMMIT, MO 64086

CUSTOMER NAME
MAR BUILDING SOLUTIONS
LEES SUMMIT, MO 64081

SHEET TITLE

JOB NUMBER
T21K0694A

STATE OF MISSOURI
KYLE A. PARSONS
NUMBER
PE-2017008513
01/27/2022
PROFESSIONAL ENGINEER

This seal pertains only to the materials designed and supplied by Nucor Building Systems, a division of Nucor Corporation. The drawings and the engineering contained therein are the property of Nucor Building Systems. The register professional engineer who sealed and signed these drawings is employed by Nucor Buildings Systems and does not serve as or assume the responsibilities of record and shall not be construed as such.

SHEET
D3 of 8

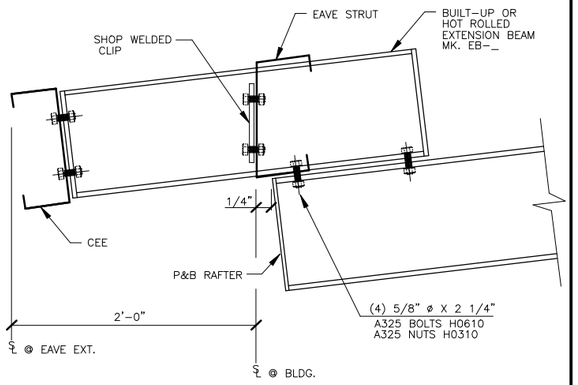

LOW EAVE EXTENSION

LE0024

POST AND BEAM ENDWALL
USE 1/2" x 2" A325 BOLTS H0603 / NUTS H0300
REFERENCE ERECTOR NOTE FOR TYPICAL WASHER REQUIREMENTS

X5

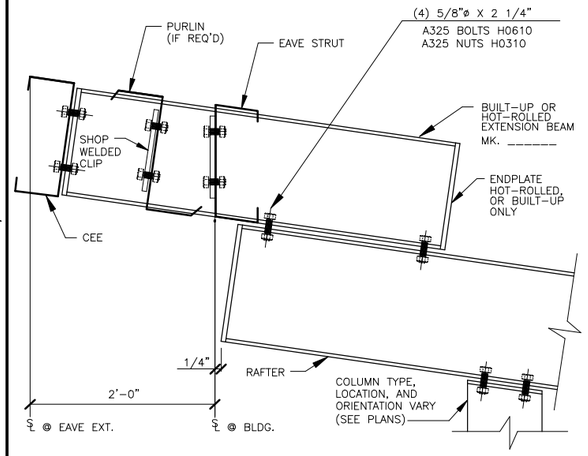

HIGH EAVE EXTENSION AT ENDWALL

AN0120

USE 1/2" x 2" A325 BOLTS H0603/NUTS H0300 U.N.O.
REFERENCE ERECTOR NOTE FOR TYPICAL WASHER REQUIREMENTS

X6

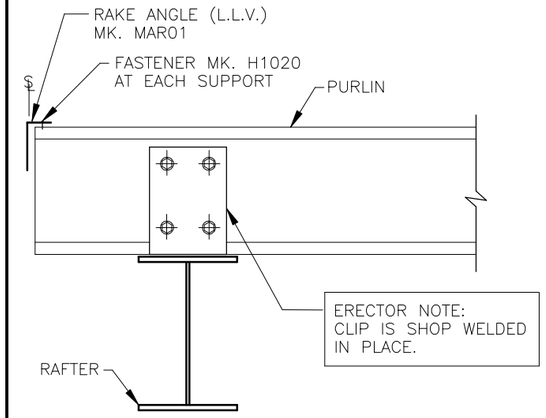

WELDED CLIP @ ENDWALL RAFTER

BB0050

USE (4) 1/2" x 1 1/4" A307
BOLTS H0500 / NUTS H0400
REFERENCE ERECTOR NOTE FOR TYPICAL WASHER REQUIREMENTS

A7

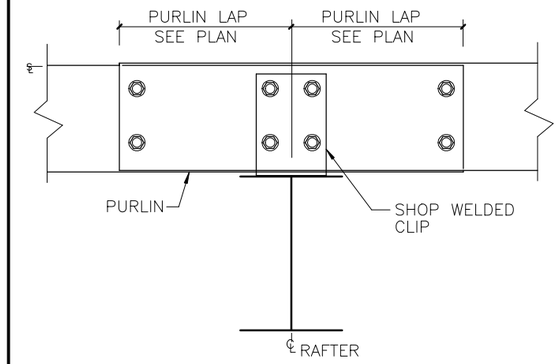

PURLIN TO INTERIOR FRAME RAFTER

BB0050

USE (8) 1/2" x 1 1/4" A307
BOLTS H0500 / NUTS H0400
REFERENCE ERECTOR NOTE FOR TYPICAL WASHER REQUIREMENTS

G2

ISSUE	DWN	CHK	ENG	PE	DATE
ANCHOR BOLTS	TDN	MBS	JSA		12/20/2021
PERMITS	TDN	MBS	JSA	KAP	12/24/2021
FINAL ERECTIONS	BDT	MBS	JSA	KAP	1/10/2022

COLLATERAL DEAD LOADS, UNLESS OTHERWISE NOTED, ARE ASSUMED TO BE UNIFORMLY DISTRIBUTED. WHEN SUSPENDED SPRINKLER SYSTEMS, LIGHTING, HVAC EQUIPMENT, CEILINGS, ETC. ARE SUSPENDED FROM ROOF MEMBERS, CONSULT ENGINEER OF RECORD IF THESE CONCENTRATED LOADS EXCEED 500 POUNDS (USING THE WEB MOUNT DETAIL) OR 200 POUNDS (USING THE FLANGE MOUNT DETAIL), OR IF INDIVIDUAL MEMBERS ARE LOADED SIGNIFICANTLY MORE THAN OTHERS.

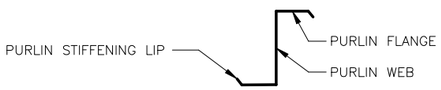

GENERAL RESTRICTION:

UNDER NO CIRCUMSTANCES CAN THE PURLIN STIFFENING LIP BE FIELD MODIFIED FROM THE FACTORY SUPPLIED CONDITION. ALSO DO NOT HANG ANYTHING FROM PURLIN STIFFENING LIP.

OPTIONS FOR SUPPORT ATTACHMENTS

OPTION A (200 LBS MAX)
DRILL SUPPORT THROUGH THE BOTTOM FLANGE OF THE PURLIN.

OPTION B (500 LBS MAX)
SUPPORT ANGLE OR SOME OTHER TYPE OF BRACKET. (NOT BY NBS) SUPPORT THROUGH PURLIN WEB.

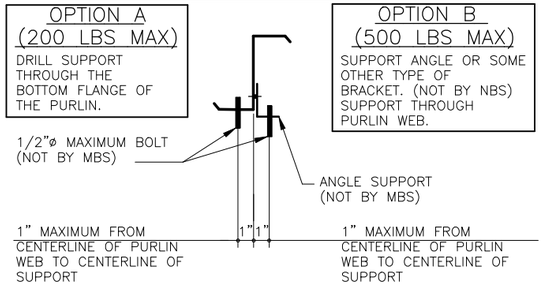

OPTION C: (200 LBS MAX)
IF PURLIN FLANGE SUPPORT CLAMPS ARE USED.

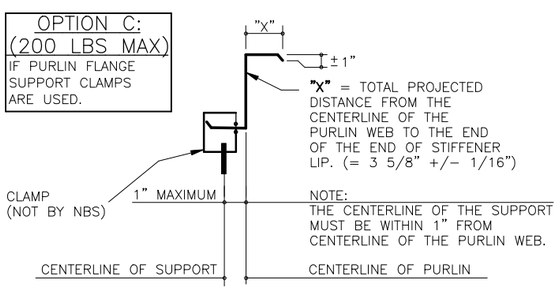

PURLIN SUPPORT METHODS

B00010

NBD0130

INSTALLATION INSTRUCTIONS

1) FOR PURLIN BRACE "X", INSERT ANGLES "BACK-TO-BACK" INTO THE FACTORY PUNCHED SLOTS. BEND TABS AS SHOWN AND FASTEN THROUGH TAB WITH (1) H1020 FASTENER PER END.

2) CONNECT PURLIN BRACE "X" AT THE ANGLE INTERSECTION WITH (1) H1020 FASTENER.

3) PURLIN BRACING IS NOT TO DISTORT OR ALTER PURLINS FROM THEIR INTENDED SHAPE OR LOCATION.

4) SEE DETAILS BELOW FOR ADDITIONAL INFORMATION WHEN ATTACHING TO ALTERNATE FRAMING MEMBERS.

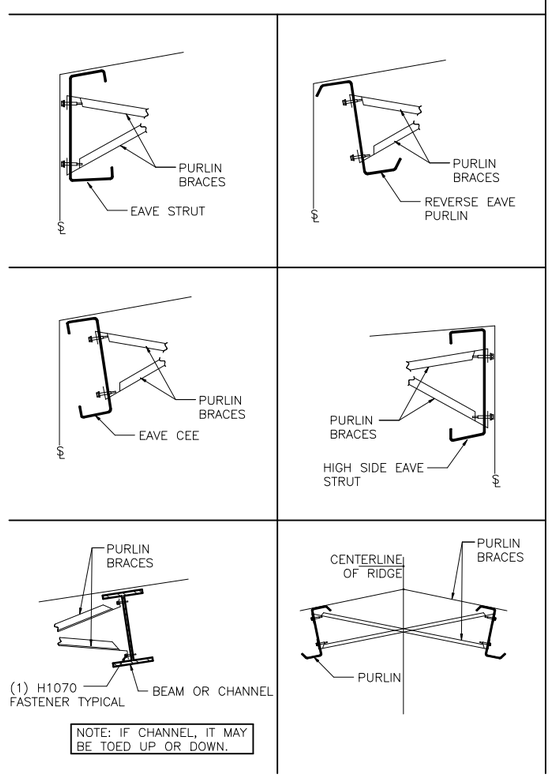

BE0010

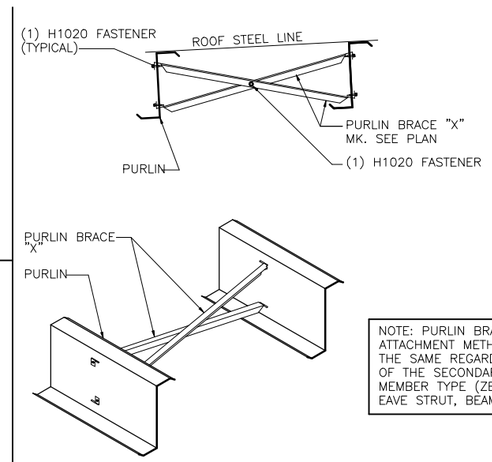

PLAN VIEW OF PURLIN BRACING LOCATIONS PER BAY

1) SEE ROOF FRAMING PLAN(S) FOR PURLIN BRACE MARK NUMBERS, QUANTITIES AND LOCATIONS.

2) (2) ROWS OF PURLIN BRACING IS SHOWN BELOW FOR REFERENCE ONLY, ACTUAL NUMBER OF ROWS MAY VARY PER BAY AND PER PROJECT, SEE ROOF FRAMING PLAN(S) FOR SPACING.

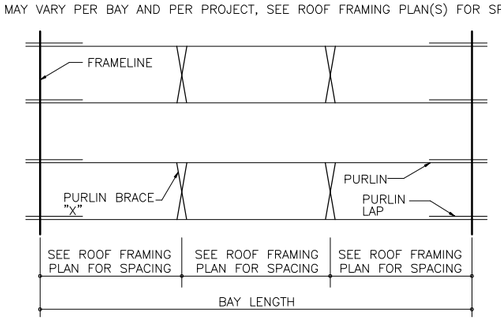

PURLIN BRACING ATTACHMENT METHODS

ANGLE_130

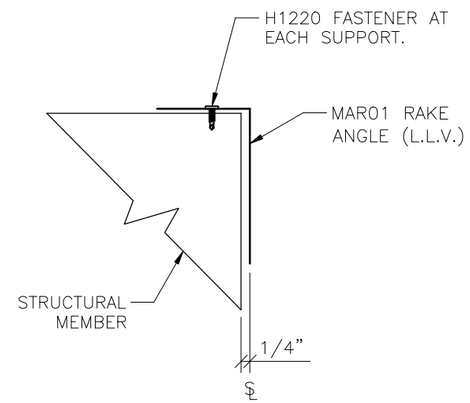

RAKE ANGLE @ INS. PANEL

BD0121

AT ENDWALL STEEL LINE

BD0121

NUCOR BUILDING SYSTEMS
305 INDUSTRIAL PARKWAY, WATERLOO, IN 46793
PHONE: (260) 837-7891 FAX: (260) 837-7384
PO BOX 1006, 200 WHETSTONE RD, SWANSEA, SC 29160
PHONE: (803) 568-2100 FAX: (803) 568-2121
600 APACHE TRAIL, TERRELL, TX 75160
PHONE: (972) 524-4417 FAX: (972) 524-4362
1000 WATER STREET, BRIGHAM CITY, UT 84302
PHONE: (435) 919-3100 FAX: (435) 919-3101

PROJECT NAME
DBAT SINGLE SLOPE
, LEES SUMMIT, MO 64086

CUSTOMER NAME
MAR BUILDING SOLUTIONS
LEES SUMMIT, MO 64081

JOB NUMBER
T21K0694A

SHEET TITLE

STATE OF MISSOURI
KYLE A. PARSONS
NUMBER PE-2017008513
01/27/2022
PROFESSIONAL ENGINEER

This seal pertains only to the materials designed and supplied by Nucor Building Systems, a division of Nucor Corporation. The drawings and the information on these drawings represent are the product of Nucor Building Systems. The register professional engineer who signed and stamped these drawings is employed by Nucor Buildings Systems and does not serve as the registered professional engineer of record and shall not be construed as such.

SHEET
D4 of 8

ERECTOR NOTE:

UNLESS SPECIFICALLY NOTED OTHERWISE, STANDARD ZEE GIRT ORIENTATION IS TO HAVE THE GIRT TOED DOWN AT THE STEEL LINE AS SHOWN IN THE DETAIL BELOW.

UNLESS SPECIFICALLY NOTED OTHERWISE, STANDARD CEE GIRT ORIENTATION IS TO HAVE THE GIRT TOED UP AS SHOWN IN THE DETAIL BELOW. STANDARD CLIP ATTACHMENT IS BELOW THE GIRT, HOWEVER SOME DETAILS REQUIRE THAT THE CLIP BE ABOVE THE GIRT OR THAT THE GIRT BE TOED DOWN.

(REFER TO THE GIRT DETAILS FOR SPECIFIC CONNECTION REQUIREMENTS).

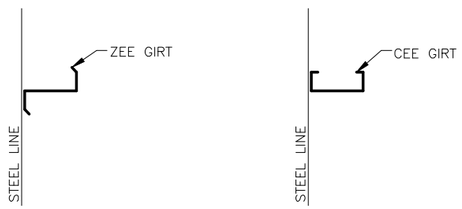

ZEE GIRT ORIENTATION CEE GIRT ORIENTATION

STANDARD GIRT ORIENTATION DETAIL

SEE GIRT DETAILS FOR GIRT CONNECTIONS
(COLUMNS NOT SHOWN)

C00010

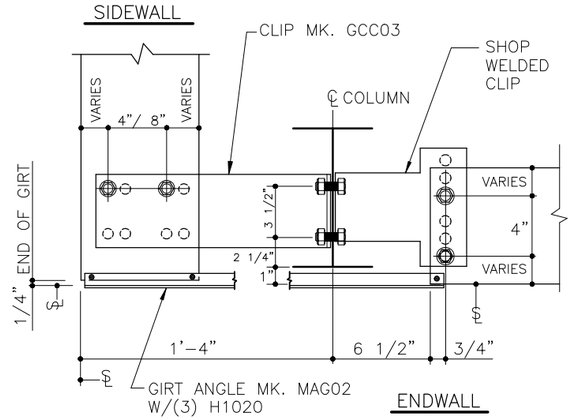

INSET ENDWALL GIRTS AT CORNER

USE (4) 1/2" x 1 1/4" A307
BOLTS H0500 / NUTS H0400
REFERENCE ERECTOR NOTE FOR TYPICAL WASHER REQUIREMENTS

D4

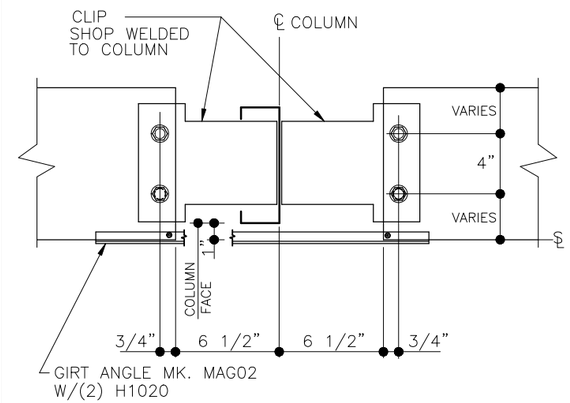

INSET GIRT AT INTERIOR BAY COLUMN

USE (4) 1/2" x 1 1/4" A307
BOLTS H0500 / NUTS H0400
REFERENCE ERECTOR NOTE FOR TYPICAL WASHER REQUIREMENTS

C4

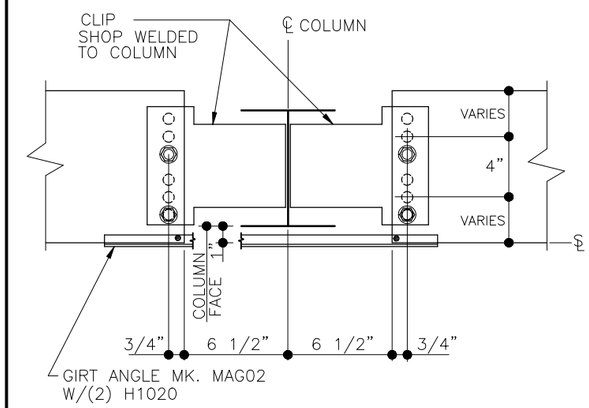

INSET GIRT AT INTERIOR BAY

USE (4) 1/2" x 1 1/4" A307
BOLTS H0500 / NUTS H0400
REFERENCE ERECTOR NOTE FOR TYPICAL WASHER REQUIREMENTS

H6

ISSUE	DWN	CHK	ENG	PE	DATE
ANCHOR BOLTS	TDN	MBS	JSA		12/20/2021
PERMITS	TDN	MBS	JSA	KAP	12/24/2021
FINAL ERECTIONS	BDT	MBS	JSA	KAP	1/10/2022

NUCOR BUILDING SYSTEMS
305 INDUSTRIAL PARKWAY, WATERLOO, IN 46793
PHONE: (260) 837-7891 FAX: (260) 837-7384
PO BOX 1006, 200 WHETSTONE RD, SWANSEA, SC 29160
PHONE: (803) 568-2100 FAX: (803) 568-2121
600 APACHE TRAIL, TERRELL, TX 75160
PHONE: (972) 524-0117 FAX: (972) 524-5417
1000 WESTGATE DRIVE, BRIGHAM CITY, UT 84302
PHONE: (435) 919-3100 FAX: (435) 919-3101

PROJECT NAME
DBAT SINGLE SLOPE
, LEES SUMMIT, MO 64086

CUSTOMER NAME
MAR BUILDING SOLUTIONS
LEES SUMMIT, MO 64081

JOB NUMBER
T21K0694A

SHEET TITLE

STATE OF MISSOURI
KYLE A. PARSONS
NUMBER
PE-2017008513
01/27/2022
PROFESSIONAL ENGINEER

This seal pertains only to the materials designed and supplied by Nucor Building Systems, a division of Nucor Corporation. The drawings and the information contained therein are the property of Nucor Building Systems. The register professional engineer whose seal appears on those drawings is employed by Nucor Buildings Systems and does not serve as a consultant to the owner of record and shall not be construed as such.

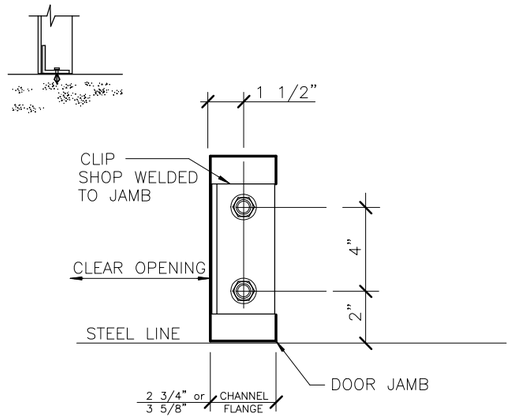

JAMB TO FINISHED FLOOR

ATTACHMENT TO SLAB BY OTHERS

E9

JAMB DEPTH	JAMB SHAPE	HOLDBACK DIMENSION
8"	C	3"
8"	S	4¼"
9½"	C	3½"
9½"	S	4⅛"
12"	S	4⅛"

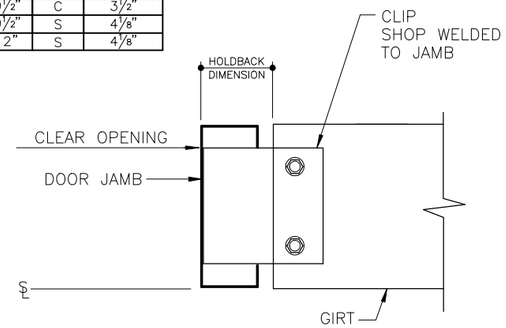

GIRT TO JAMB

USE (2) 1/2" x 1 1/4" A307
BOLTS H0500 / NUTS H0400
REFERENCE ERECTOR NOTE FOR TYPICAL WASHER REQUIREMENTS

K3

CG0070

ERECTOR NOTE:
PRE-DRILL HOLES @ NESTED ZEE GIRTS & DOUBLE CEE GIRTS IF REQUIRED.

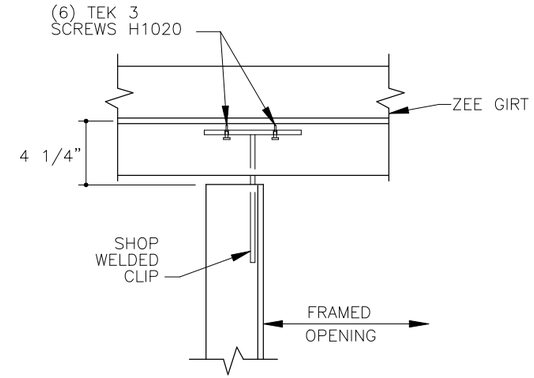

DOOR JAMB TO GIRT

LX

DIM. A= 4" AT 8" & 10" GIRTS | DIM. B= 1" AT 8" & 10" GIRTS

ERECTOR NOTE:
-PRE-DRILL HOLES AT NESTED ZEE GIRTS & DOUBLE CEE GIRTS IF REQUIRED.
-IF THE T-CLIP IS LOCATED IN THE SAME LOCATION AS NESTED GIRT BOLTS, THE NESTED GIRT BOLTS CAN BE REMOVED.

LEFT HAND DETAIL SHOWN,
RIGHT HAND OPPOSITE

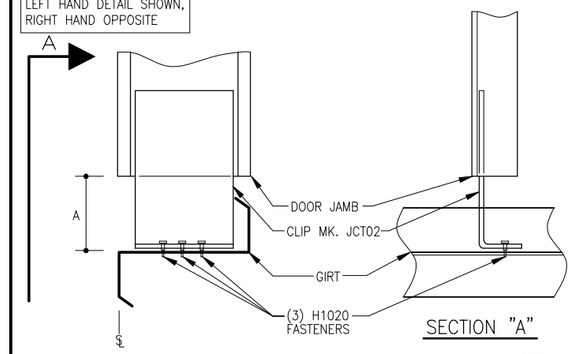

JAMB TO GIRT CONNECTION

REFERENCE STANDARD WASHER DETAIL FOR TYPICAL WASHER REQUIREMENTS

L18

ISSUE	DWN	CHK	ENG	PE	DATE
ANCHOR BOLTS	TDN	MBS	JSA		12/20/2021
PERMITS	TDN	MBS	JSA	KAP	12/24/2021
FINAL ERECTIONS	BDT	MBS	JSA	KAP	1/10/2022

ERECTOR NOTES:
-IF THE T-CLIP IS LOCATED IN THE SAME LOCATION AS NESTED GIRT BOLTS, THE NESTED GIRT BOLTS CAN BE REMOVED.
-PRE-DRILL HOLES AT NESTED ZEE GIRTS AND DOUBLE CEE GIRTS AS REQUIRED.

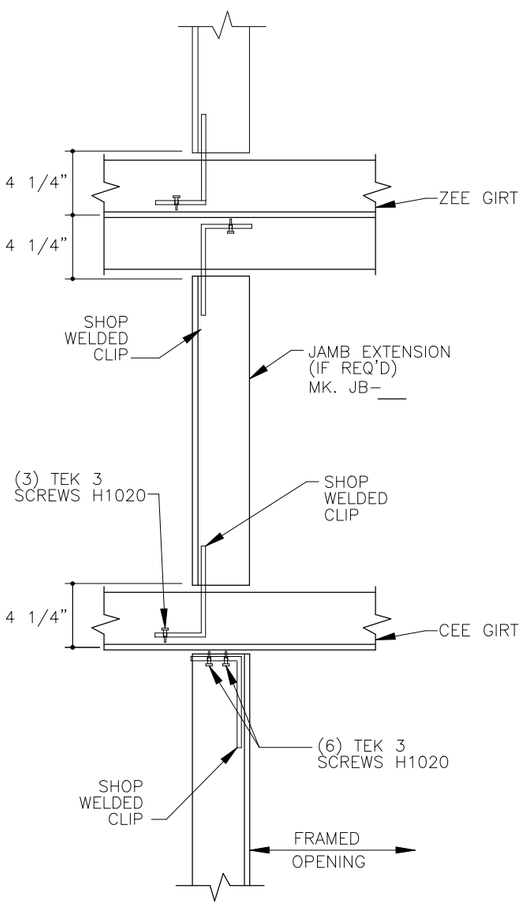

DOOR JAMB TO GIRT

REFERENCE ERECTOR NOTE FOR TYPICAL WASHER REQUIREMENTS

L8

CG0070

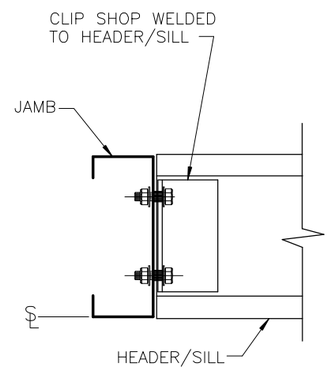

HEADER/SILL TO JAMB

USE (2) 1/2" x 1 1/4" A307 BOLTS H0500 / NUTS H0400
REFERENCE ERECTOR NOTE FOR TYPICAL WASHER REQUIREMENTS

M3

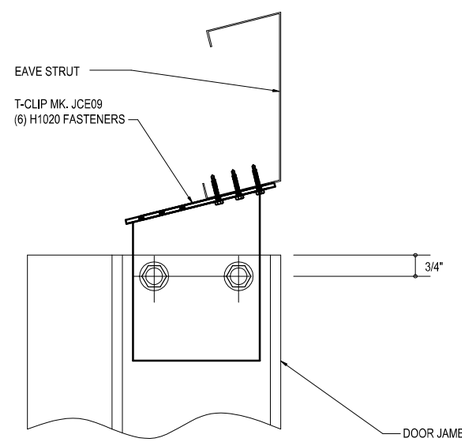

DOOR JAMB TO HIGH EAVE STRUT

USE (2) 1/2" x 1 1/4" A307 BOLTS H0500 / NUTS H0400
REFERENCE ERECTOR NOTE FOR TYPICAL WASHER REQUIREMENTS

L17

CG1090

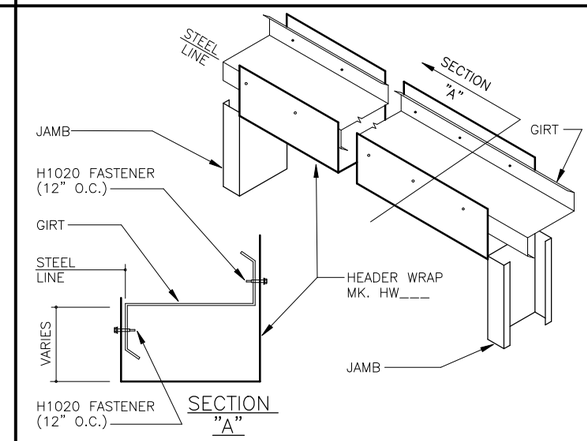

CG0025

HEADER WRAP DETAIL

ANGLE_100

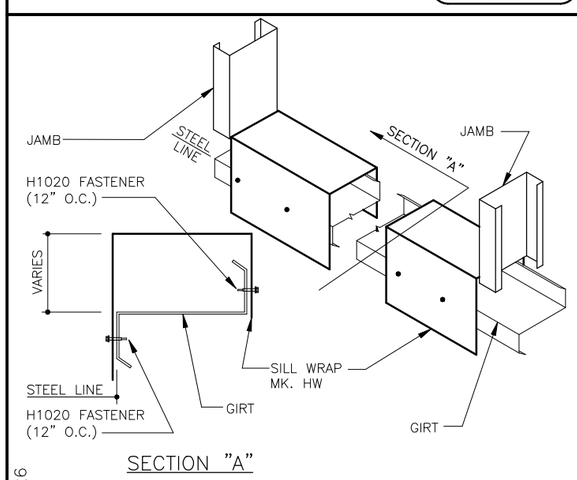

SECTION "A"

SILL WRAP DETAIL

CG0026

CG0026

NUCOR BUILDING SYSTEMS
305 INDUSTRIAL PARKWAY, WATERLOO, IN 46793
PHONE: (260) 837-7891 FAX: (260) 837-7384
PO BOX 1006, 200 WHETSTONE RD, SWANSEA, SC 29160
PHONE: (803) 568-2100 FAX: (803) 568-2121
600 APACHE TRAIL, TERRELL, TX 75160
PHONE: (972) 524-0117 FAX: (972) 524-3417
10000 WESTPARK DRIVE, BRIGHAM CITY, UT 84302
PHONE: (435) 919-3100 FAX: (435) 919-3101

PROJECT NAME
DBAT SINGLE SLOPE
, LEES SUMMIT, MO 64086

CUSTOMER NAME
MAR BUILDING SOLUTIONS
LEES SUMMIT, MO 64081

JOB NUMBER
T21K0694A

SHEET TITLE

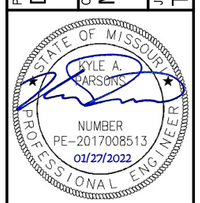

This seal pertains only to the materials designed and supplied by Nucor Building Systems, a division of Nucor Corporation. The drawings and the materials shown on these drawings are the product of Nucor Building Systems. The register professional engineer who seals these drawings is employed by Nucor Buildings Systems and does not serve as the owner and the owner/owner of record and shall not be construed as such.

SHEET
D6 of 8

IMPORTANT ERECTOR NOTE:

PLEASE REFER TO THE SHEETING ERECTION MANUALS FOR FURTHER ASSEMBLY INSTRUCTIONS

ONLINE VIDEO AND MANUALS ARE ALSO AVAILABLE:

PRIOR TO STARTING THE SHEETING PLEASE VISIT:
https://www.nucorbuildingsystems.com/resources/manuals/

INSTALLATION INSTRUCTIONS

- CFR Standing Seam Installation
- CFR Installation Videos
- Video de Instalacion de cubierta tipo
- Classic Roof Installation
- VR16 II Vertical Rib Installation
- HR3 Insulated Roof Installation
- SR2 Insulated Standing Seam
- Insulated Wall Sheeting
- Single Curb Installation
- Double Curb Installation

SEAMING MANUALS

- CFR Standing Seam
- SR2 Insulated Standing Seam
- VR16 II Vertical Rib

SPECS & OTHER GUIDES

- Master Spec 13 34 19
- NBS Specification Guide
- Preventative Maintenance Manual

EMNOTE

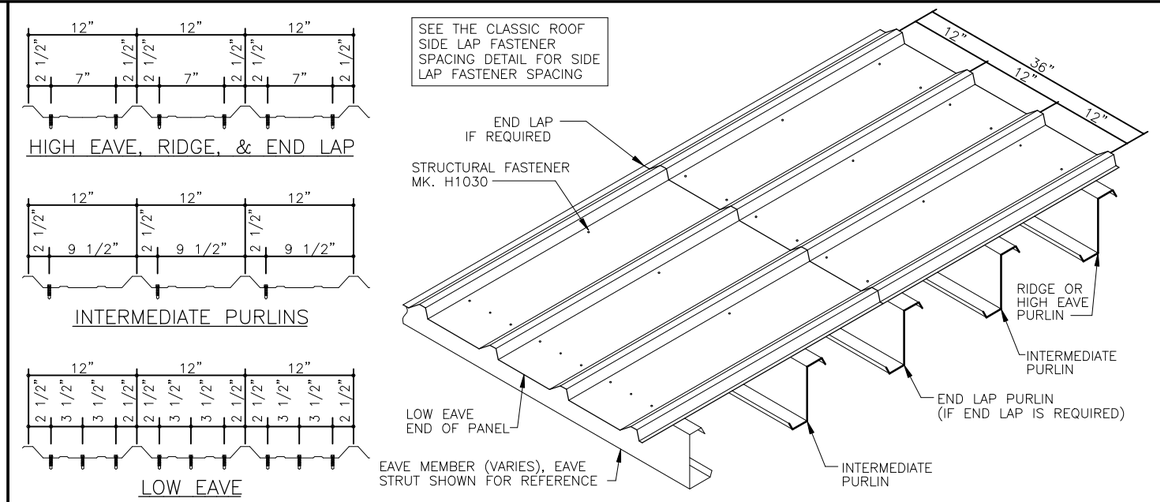

CLASSIC ROOF STRUCTURAL FASTENER SPACING (STANDARD)

DA0001

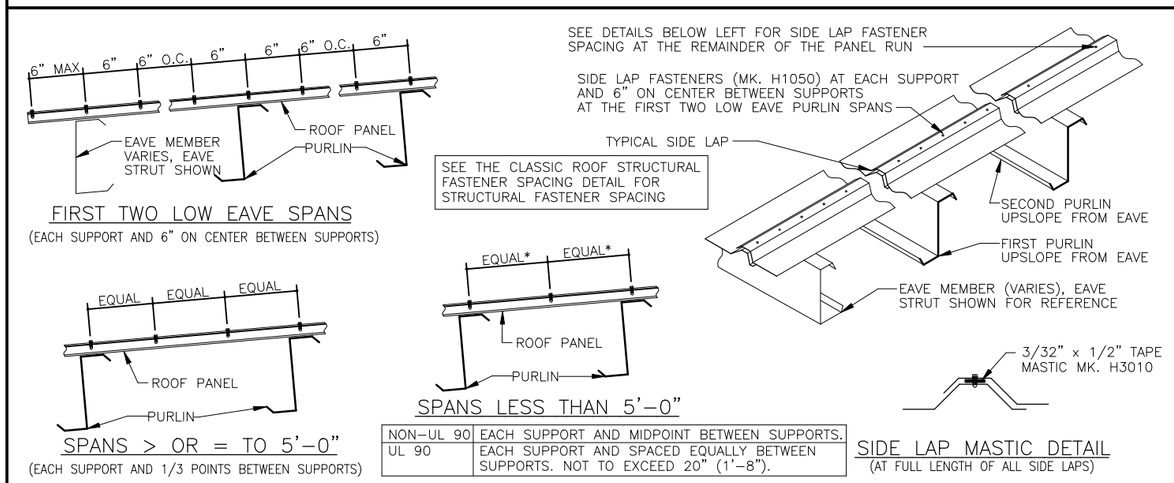

NON-UL 90	EACH SUPPORT AND MIDPOINT BETWEEN SUPPORTS.
UL 90	EACH SUPPORT AND SPACED EQUALLY BETWEEN SUPPORTS. NOT TO EXCEED 20" (1'-8").

CLASSIC ROOF SIDE LAP FASTENER SPACING (STANDARD)

DA0002

STANDARD FASTENER SCHEDULE

H1000 SELF-TAPPING SCREW (GOOF SCREW) 17-14 x 1 1/4" WITH WASHER LONG LIFE FASTENER 3/8" HEAD	H1042 SELF-DRILLING SCREW 12-14 x 7/8" TCP3 W/O WASHER 5/16" HEAD	H1070 SELF-DRILLING SCREW 12-24 x 1 1/2" TCP5 W/O WASHER 5/16" HEAD 1/2" THK MAX DRILLING CAPACITY
H1020 SELF-DRILLING SCREW 1/4-14 x 1 1/4" TCP3 W/O WASHER 5/16" HEAD 3/16" THK MAX DRILLING CAPACITY	H1045 SELF-DRILLING SCREW 12-14 x 2" TCP3 W/O WASHER 5/16" HEAD	H1100 1/8" x 3/16" STAINLESS STEEL BLIND POP RIVET
H1030 SELF-DRILLING SCREW 12-14 x 1 1/4" TCP2 WITH WASHER LONG LIFE FASTENER 5/16" HEAD	H1047 SELF-DRILLING SCREW 12-14 x 2" TCP3 FLAT TOP WITH WASHER 5/16"ø HEAD	H1110 3/8"ø STAINLESS GROMMET FASTENER
H1035 SELF-DRILLING SCREW 12-14 x 1 1/2" TCP2 WITH WASHER LONG LIFE FASTENER 5/16" HEAD	H1050 SELF-DRILLING SCREW 1/4-14 x 7/8" TCP1 WITH WASHER LONG LIFE FASTENER 5/16" HEAD	H1220 SELF-DRILLING SCREW 12-14 x 1" TCP3 W/O WASHER PHILLIPS HEAD
H1040 SELF-DRILLING SCREW 12-14 x 1 1/4" TCP2 W/O WASHER 5/16"ø HEAD	H1060 SELF-DRILLING SCREW 1/4-14 x 7/8" TCP1 W/O WASHER 5/16" HEAD	PRE-DRILL DIAMETERS 3/16"ø FOR: H1020, H1070 5/32"ø FOR: H1030, H1035, H1040, H1041, H1042, H1045, H1047, H1220
H1041 SELF-DRILLING SCREW 12-14 x 1 1/4" TCP2 FLAT TOP WITH WASHER 5/16" HEAD	H1061 SELF-DRILLING SCREW 1/4-14 x 7/8" TCP1 FLAT TOP WITH WASHER 5/16"ø HEAD	1/8"ø FOR: H1050, H1060, H1061

DA0080

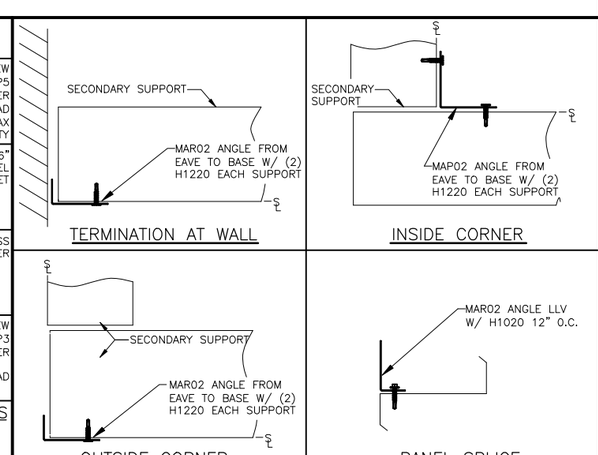

C00020

SHEETING ANGLE DETAIL
PRE-DRILL AS REQUIRED

C00020

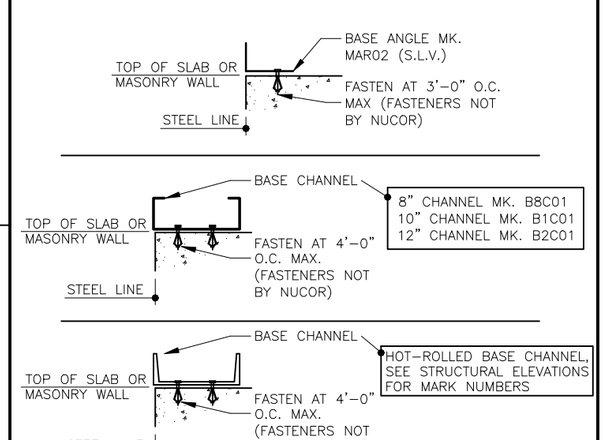

C00040

BASE MEMBER DETAIL
WALL BY OTHERS

C00040

ISSUE	DWN	CHK	ENG	PE	DATE
ANCHOR BOLTS	TDN	MBS	JSA		12/20/2021
PERMITS	TDN	MBS	JSA	KAP	12/24/2021
FINAL ERECTIONS	BDT	MBS	JSA	KAP	1/10/2022

NUCOR BUILDING SYSTEMS
305 INDUSTRIAL PARKWAY, WATERLOO, IN 46793
PHONE: (260) 837-7891 FAX: (260) 837-7384
PO BOX 1006, 200 WHETSTONE RD, SWANSEA, SC 29160
PHONE: (803) 568-2100 FAX: (803) 568-2121
600 APACHE TRAIL, TERRELL, TX 75160
PHONE: (972) 524-0707 FAX: (972) 524-5417
1005 WEST 2ND AVE, BRIGHAM CITY, UT 84302
PHONE: (435) 919-3100 FAX: (435) 919-3101

PROJECT NAME
DBAT SINGLE SLOPE
, LEES SUMMIT, MO 64086

CUSTOMER NAME
MAR BUILDING SOLUTIONS
LEES SUMMIT, MO 64081

JOB NUMBER
T21K0694A

SHEET TITLE

STATE OF MISSOURI
KYLE A. PARSONS
NUMBER PE-2017008513
01/27/2022
PROFESSIONAL ENGINEER

This seal pertains only to the materials designed and supplied by Nucor Building Systems, a division of Nucor Corporation. The drawings and the information contained therein provided are the product of Nucor Building Systems. The register professional engineer seal affixed to such drawings is for structural adequacy of those drawings is employed by Nucor Buildings Systems and does not serve as a certification of adequacy of those drawings as such.

SHEET
D7 of 8

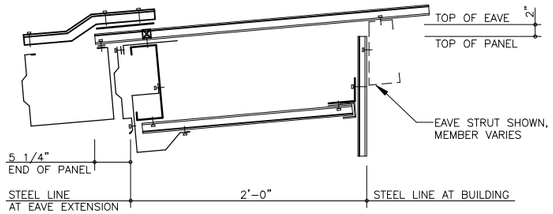

1) SEE DETAIL AT RIGHT FOR TRIM PART NUMBERS AT THE BUILDING STEEL LINE.

2) SEE THE DETAIL BELOW FOR EAVE EXTENSION TRIM PART NUMBERS.

3) SEE THE DETAIL BELOW RIGHT FOR GUTTER ASSEMBLY PART NUMBERS.

STANDARD EAVE EXTENSION w/ SOFFIT

FIELD CUT WALL PANEL AROUND EXTENSION BEAM
SEE WALL PANEL ERECTION NOTES FOR FASTENER LOCATIONS

TRIM_822

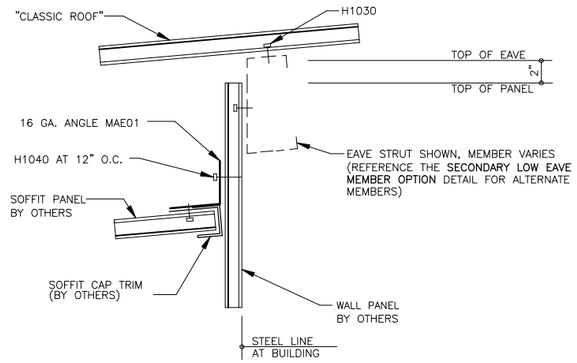

@ BUILDING STEEL LINE

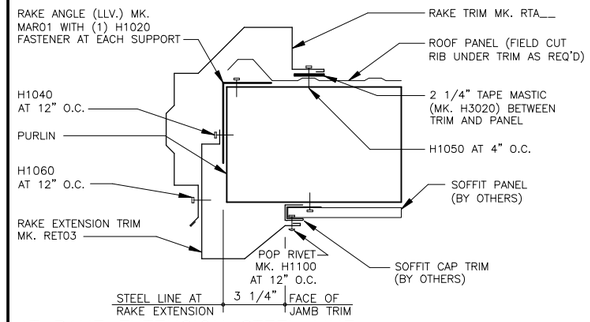

AT RAKE EXTENSION STEEL LINE

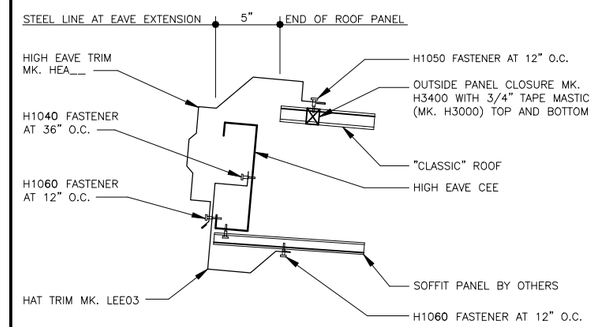

AT EAVE EXTENSION STEEL LINE

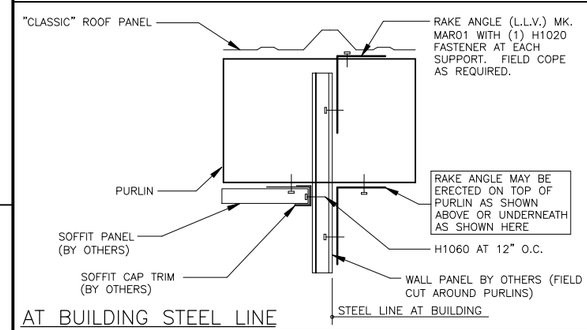

AT BUILDING STEEL LINE

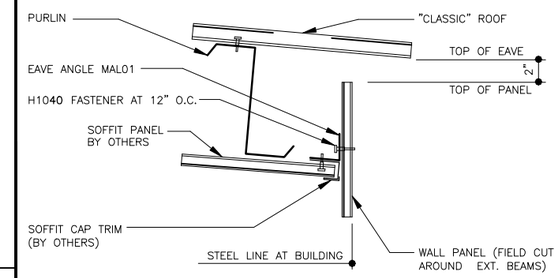

AT BUILDING STEEL LINE

SEE THE DETAIL AT RIGHT FOR GUTTER ASSEMBLY PART NUMBERS IF GUTTER IS REQUIRED

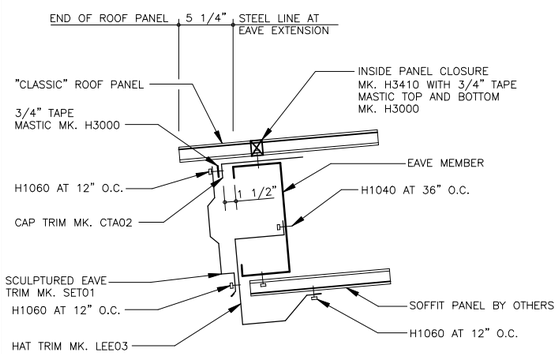

@ EXTENSION STEEL LINE

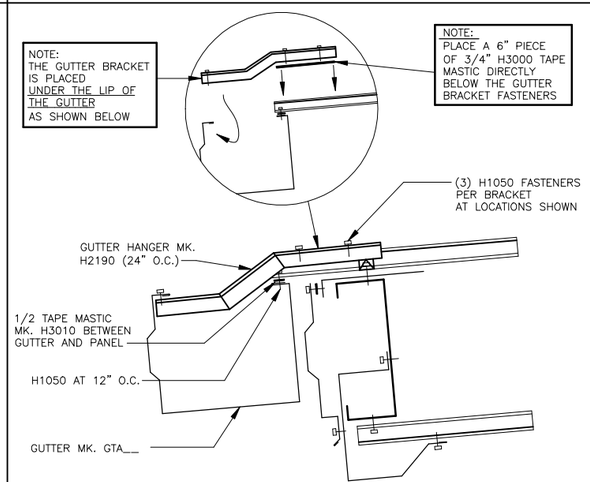

@ GUTTER (IF REQUIRED)

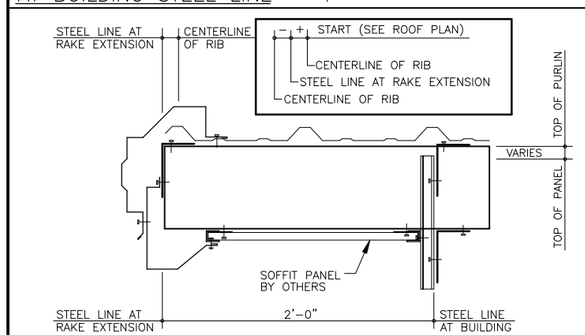

STANDARD RAKE EXTENSION

* – INSTALL JAMB TRIM AND CLOSURE PRIOR TO SOFFIT PANEL
** – FOR SLOPES GREATER THAN 1 1/2:12, REFER TO DETAIL **MASTIC_200** FOR CLOSURE PART NUMBERS.
SEE WALL SHEETING ERECTION NOTES FOR FASTENER LOCATIONS

TRIM_835

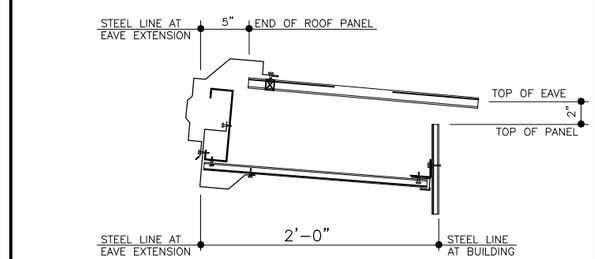

DM0090

HIGH EAVE EXTENSION DETAIL

"CLASSIC ROOF" AT STANDARD WALL PANEL
SEE WALL SHEETING ERECTION NOTES FOR WALL PANEL FASTENER LOCATIONS

DM0090

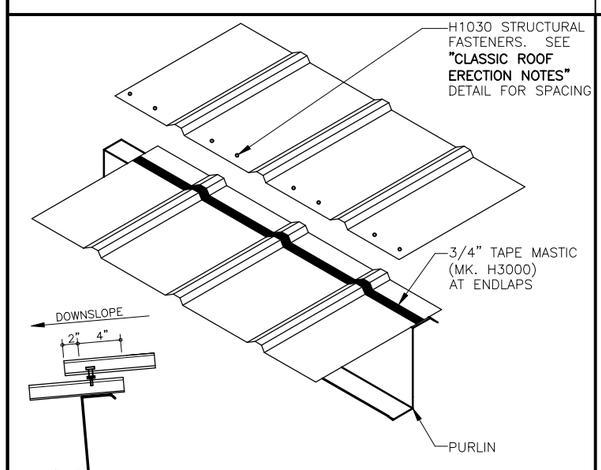

STANDARD "CLASSIC" ROOF LAP

TRIM_171

DA0071

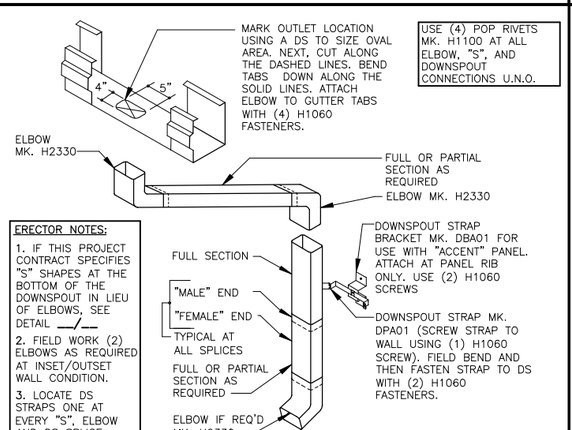

ERECTOR NOTES:

1. IF THIS PROJECT CONTRACT SPECIFIES "S" SHAPES AT THE BOTTOM OF THE DOWNSPOUT IN LIEU OF ELBOWS, SEE DETAIL __/__
2. FIELD WORK (2) ELBOWS AS REQUIRED AT INSET/OUTSET WALL CONDITION.
3. LOCATE DS STRAPS ONE AT EVERY "S", ELBOW AND DS SPLICE.

DOWNSPOUT STRAP (MK. DPA01) AND STRAP BRACKETS (MK. DBA01) ARE ALSO PROVIDED FOR MASONRY WALL APPLICATIONS AS WELL AS FOR ATTACHMENT TO COLUMNS. FASTENERS TO MASONRY ARE NOT PROVIDED BY THE M.B.S. H1060 FASTENERS ARE PROVIDED FOR COLUMN ATTACHMENT APPLICATIONS, PRE-DRILLING WILL BE REQUIRED.

GUTTER AND DOWNSPOUT AT OVERHANG

REFERENCE GUTTER AND DOWNSPOUT SCHEDULE FOR DOWNSPOUT MARK NUMBERS

TRIM_22

GA0170

ISSUE	DWN	CHK	ENG	PE	DATE
ANCHOR BOLTS	TDN	MBS	JSA		12/20/2021
PERMITS	TDN	MBS	JSA	KAP	12/24/2021
FINAL ERECTIONS	BDT	MBS	JSA	KAP	1/10/2022

NUCOR BUILDING SYSTEMS
305 INDUSTRIAL PARKWAY, WATERLOO, IN 46793
PHONE: (260) 837-7891 FAX: (260) 837-7384
PO BOX 1006, 200 WHETSTONE RD, SWANSEA, SC 29160
PHONE: (803) 568-2100 FAX: (803) 568-2121
600 APACHE TRAIL, TERRELL, TX 75160
PHONE: (972) 524-4417 FAX: (972) 524-4302
1005 WATER AVE, BRIGHAM CITY, UT 84302
PHONE: (435) 919-3100 FAX: (435) 919-3101

PROJECT NAME
DBAT SINGLE SLOPE
, LEES SUMMIT, MO 64086

CUSTOMER NAME
MAR BUILDING SOLUTIONS
LEES SUMMIT, MO 64081

JOB NUMBER
T21K0694A

SHEET TITLE

STATE OF MISSOURI
KYLE A. PARSONS
NUMBER PE-2017008513
01/27/2022
PROFESSIONAL ENGINEER

This seal pertains only to the materials designed and supplied by Nucor Building Systems, a division of Nucor Corporation. The drawings and the information, data, and specifications are the product of Nucor Building Systems. The register professional engineer who affixed his seal to these drawings is employed by Nucor Building Systems and does not serve as the registered professional engineer of record and shall not be constituted as such.

SHEET
D8 of 8