THE Signature AT WEST PRYOR

2100 AND 2150 NW LOWENSTEIN DR.
LEE'S SUMMIT, MISSOURI 64081

PROJECT NO.: 20-001

ISSUE DATE: 5.12.2022 Revision 3

GENERAL NOTES

1. AIA DOCUMENT A-201 , GENERAL CONDITIONS OF THE CONTRACT FOR CONSTRUCTION, CURRENT EDITION, AND SPECIAL CONDITIONS AS NOTED IN THE PROJECT MANUAL, SHALL GOVERN THE WORK.
2. GENERAL CONTRACTOR AND SUBCONTRACTORS SHALL VERIFY EXISTING FIELD CONDITIONS PRIOR TO THE START OF CONSTRUCTION AND SHALL REPORT ANY DISCREPANCIES TO THE ARCHITECT IMMEDIATELY.
3. GENERAL CONTRACTOR SHALL CROSS-REFERENCE THE VARIOUS DISCIPLINES' PLANS HEREIN AND REVIEWED SHOP DRAWINGS PRIOR TO STARTING CONSTRUCTION PHASE OF CONSTRUCTION AND SHALL REPORT ANY DISCREPANCIES TO THE ARCHITECT IMMEDIATELY.
4. ONLY CONTRACT DOCUMENTS APPROVED FOR CONSTRUCTION AND REVIEWED SHOP DRAWINGS SHALL BE USED FOR CONSTRUCTION. GENERAL CONTRACTOR SHALL BE RESPONSIBLE FOR DISTRIBUTION OF SAID DOCUMENTS AND UPDATES TO THE FIELD FOR CONSTRUCTION.
5. IT SHALL BE THE RESPONSIBILITY OF THE GENERAL CONTRACTOR TO COORDINATE THE SUBCONTRACTOR WORK WITH THESE PROJECT DOCUMENTS.
6. DIMENSIONS TO THE EXTERIOR OF THE BUILDING ARE TO THE EXTERIOR OF FOUNDATION/MASONRY UNLESS NOTED OTHERWISE.
7. DO NOT SCALE DRAWINGS.
8. THE WORD 'ALIGN' AS USED IN THESE DOCUMENTS SHALL SUPERSEDE DIMENSIONAL INFORMATION.
9. NO PRODUCTS CONTAINING ASBESTOS SHALL BE INSTALLED IN OR USED DURING THE CONSTRUCTION OF THIS PROJECT. IT SHALL BE THE RESPONSIBILITY OF THE GENERAL CONTRACTOR TO CERTIFY TO THE OWNER THAT THIS REQUIREMENT HAS BEEN COMPLIED WITH.
10. ALL HVAC EQUIPMENT AND DUCTWORK SHALL COMPLY WITH THE CURRENT APPLICABLE MECHANICAL CODE AND INSTALLED PER SMACNA RECOMMENDATIONS.
11. CODE COMPLIANCE - THE WORK SHALL BE GOVERNED BY ALL CURRENT APPLICABLE LOCAL, CITY, STATE AND NATIONAL CODES AND LAWS. THESE AUTHORITIES INCLUDE, BUT ARE NOT LIMITED TO THE INTERNATIONAL BUILDING CODE, NATIONAL ELECTRIC CODE, NATIONAL FIRE PROTECTION ASSOCIATION OR ANY OTHER AUTHORITY OR BODY HAVING JURISDICTION OVER WORK. THE SITE, PARKING LOT, AND BUILDING SHALL COMPLY WITH THE ADA (AMERICANS WITH DISABILITIES ACT) REGULATIONS. NOTIFY ARCHITECT OF ANY REQUIRED CHANGES TO COMPLY WITH ADA.
12. REFERENCE CIVIL DRAWINGS FOR SITE WORK, INCLUDING THE BUILDING LOCATION ON THE SITE.

ABBREVIATIONS

ABV	ABOVE	HDWD	HARDWOOD	SCHED	SCHEDULE
AFF	ABOVE FINISH FLOOR	HDPB	HIGH DENSITY PARTICLE BOARD	SECT	SECTION
ACT	ACOUSTICAL	HT	HEIGHT	SHT	SHEET
ALUM	ALUMINUM	HR	HOUR	SIM	SIMILAR
&	AND	INSUL	INSULATION	SC	SOLID CORE
@	AT	JT	JOINT	SPEC	SPECIFICATION
BLK	BLOCK	LAV	LAVATORY	SQ	SQUARE
BD	BOARD	MO	MASONRY OPENING	SF	SQUARE FOOT
BO	BOTTOM OF	MSRY	MASONRY	SS	STAINLESS STEEL
CLG	CEILING	MDF	MEDIUM DENSITY FIBERBOARD	STD	STANDARD
℄	CENTER LINE	MECH	MECHANICAL	STL	STEEL
CT	CERAMIC TILE	MTL	METAL	STRUCT	STRUCTURAL
CLR	CLEAR	NIC	NOT IN CONTRACT	SUSP	SUSPENDED
CONC	CONCRETE	NTS	NOT TO SCALE	TEL	TELEPHONE
CMU	CONC. MASONRY UNIT	OFCI	OWNER FURNISHED CONTRACTOR INSTALLED	THK	THICK
CONT	CONTINOUS	OFOI	OWNER FURNISHED OWNER INSTALLED	TO	TOP OF
CONTR	CONTRACTOR	OC	ON CENTER	T&G	TONGUE & GROOVE
CFCI	CONTRACTOR FURNISHED CONTRACTOR INSTALLED	OPNG	OPENING	TYP	TYPICAL
CJ	CONTROL JOINT	PTD	PAINTED	UNF	UNFINISHED
CG	CORNER GUARD	PLAM	PLASTIC LAMINATE	UNO	UNLESS NOTED OTHERWISE
DTL	DETAIL	PLYWD	PLYWOOD	VERT	VERTICAL
DIA	DIAMETER	PT	PRESSURE TREATED	VEST	VESTIBULE
DR	DOOR	RAD	RADIUS	WP	WATERPROOF
DS	DOWNSPOUT	RE	REFERENCE	WT	WEIGHT
DWG	DRAWING	REINF	REINFORCING	W	WITH
EOS	EDGE OF SLAB	RCP	REFLECTED CEILING PLAN	W/O	WITH OUT
ELEC	ELECTRICAL	REQ'D	REQUIRED	WD	WOOD
ELEV	ELEVATION	RD	ROOF DRAIN		
EQ	EQUAL	RM	ROOM		
EQUIP	EQUIPMENT	RO	ROUGH OPENING		
EXIST	EXISTING				
EJ	EXPANSION JOINT				
FT	FEET				
FG	FINISH GRADE				
FF	FINISH FLOOR				
FR	FIRE RETARDANT				
FL	FLOOR				
GC	GENERAL CONTR.				
GYP	GYPSUM				



SYMBOLS

CONCRETE

BRICK

BLOCKING

BATT INSULATION

RIGID INSULATION

CONCRETE BLOCK

5 / A10 — BUILDING SECTION

5 / A10 — WALL SECTION

5 / A10 — DETAIL

P3 — PARTITION TYPE

COL — COL. GRID

ROOM 101 — ROOM

T — TEMPERED GLASS

NEW CONSTRUCTION

EXISTING CONSTR. TO REMAIN

EXISTING CONSTR. REMOVED

PROJECT DIRECTORY

Owner
TEGETHOFF DEVELOPMENT
P.O. BOX 6331
FISHERS, IN 46038
Phone: 765.639.6300
Contact: LINDSEY KING

Architect
TR¡ ARCHITECTS
1790 BRENTWOOD BLVD.
ST. LOUIS, MISSOURI 63144
Phone: 314.395.9750
Contact: MICHAELA SILVA

General Contractor
BRINKMANN CONSTRUCTORS
8700 INDIAN CREEK PARKWAY SUITE 150
OVERLAND PARK, KANSAS 66210
Phone: 785.554.2280
Contact: SCOTT GRAUSE

Structural Engineer
BOB D CAMPBELL & COMPANY
4338 BELLEVIEW AVENUE
KANSAS CITY, MISSOURI 64111
Phone: 816.531.4144
Contact: CLARK BASIGNER
(DIRECT:816.778.7151)

Civil Engineer
SM ENGINEERING
Phone: 785.341.9747
Contact: SAM MALINOWSKY

Mech. / Elec. / Plumb. Eng.
LATIMER SOMMERS & ASSOCIATES
3639 SW SUMMERFIELD DR STE A
TOPEKA, KANSAS 66614
Phone: 785.233.3232
Contact: RICH BEARDMORE

PROJECT SUMMARY

***FOR COMPLETE CODE ANALYSIS SEE LIFE SAFETY PLAN SHEET AXXX - AXXX**

PROJECT NAME: The Signature at West Pryor

PROJECT ADDRESS: 2100 AND 2150 NW LOWENSTEIN DR.

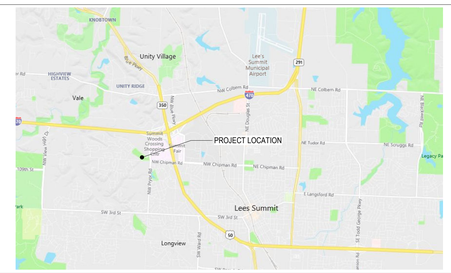
PROJECT DESCRIPTION: LEE'S SUMMIT, MISSOURI 64081
DESCRIPTION

BUILDING CODES:
2018 International Building Code
2017 National Electric Code
2018 International Mechanical Code
2018 International Plumbing Code
2018 International Fire Code
2018 International Energy Conservation Code

ACCESSIBILITY
2010 ADA Guidelines & 2009 ICC/ANSI A117.1 & FAIR HOUSING ACT

OCCUPANCY TYPE / USE GROUP: R-2

LOCATION MAP



Joe Frogge — Digitally signed by Joe Frogge, DN: CN=Joe Frogge, O=TR¡ ARCHITECTS, OU=AIA, Date: 2022.05.23 15:04:21 -05'00'

RELEASED FOR CONSTRUCTION
As Noted on Plans Review
Development Services Department
Lee's Summit, Missouri
05/23/2022

5.12.2022

ARCHITECT	TR¡ ARCHITECTS
STRUCTURAL ENGINEER	BOB D CAMPBELL & COMPANY
CIVIL ENGINEER	SM ENGINEERING
GENERAL CONTRACTOR	BRINKMANN CONSTRUCTORS
MECHANICAL ENGINEER	LATIMER SOMMERS & ASSOCIATES
PLUMBING ENGINEER	LATIMER SOMMERS & ASSOCIATES
ELECTRICAL ENGINEER	LATIMER SOMMERS & ASSOCIATES

Tegethoff DEVELOPMENT

The Signature at West Pryor

2100 AND 2150 NW LOWENSTEIN DR.
LEE'S SUMMIT, MISSOURI 64081

TR¡ ARCHITECTS

TR¡ Architects
1790 S. Brentwood Blvd.
St. Louis, Missouri 63144
T: 314-395-9750
www.triarchitects.com

© Copyright 2021

DATE: 7.15.2021

REVISIONS 6

5	Revision 3	5.12.2022

DWG BY MKSS

TR¡ PROJECT NO. 20-001

SHEET NO.

A000

COVER SHEET

DRAWING INDEX

● = REVISED SHEET
○ = REISSUED SHEET/NO REVISION
X = ISSUED AS 8.5x11

	ARCHITECTURAL	BID / PERMIT SET 7.15.2021	PERMIT COMMENTS 8.17.2021	FOUNDATION PERMIT 10.11.2021	REVISION 1 - 2.11.2022	REVISION 2 - 3.1.2022	REVISION 3 - 5.12.2022
A000	COVER SHEET	●	○	○	○	○	○
A001	SHEET INDEX	●	○	●	○	○	○
A002	ACCESSIBILITY REQUIREMENTS - TYPE A UNITS	●					
A003	ACCESSIBILITY REQUIREMENTS -TYPE B UNITS	●					
A004	SOUND TRANSMISSION ASSEMBLIES	●					
A010	BLDG 1 - LIFE SAFETY PLAN	●					
A011	BLDG 1 - LIFE SAFETY PLAN	●					
A012	BLDG 1 - LIFE SAFETY PLAN	●					
A013	BLDG 2 - LIFE SAFETY PLAN	●				●	
A014	BLDG 2 - LIFE SAFETY PLAN	●					
A015	BLDG 2 - LIFE SAFETY PLAN	●					
A016	ENLARGED AMENITY LIFE SAFETY PLANS	●					
A017	UNIT LIFE SAFETY PLANS	●					
A018	MAINTENANCE / POOL HOUSE LIFE SAFETY PLAN		●		●		●
A020	ARCHITECTURAL SITE PLAN	●	●				
A021	SITE DETAILS	●					
A022	MAINTENANCE SHED / POOL HOUSE	●	●				●
A023	BLDG 1 - FIRST FLOOR ADDRESS PLAN	●	●				
A024	BLDG 1 - SECOND FLOOR ADDRESS PLAN	●					
A025	BLDG 1 - THIRD FLOOR ADDRESS PLAN	●	●				
A026	BLDG 2 - FIRST FLOOR ADDRESS PLAN	●	●				
A027	BLDG 2 - SECOND FLOOR ADDRESS PLAN	●	●				
A028	BLDG 2 - THIRD FLOOR ADDRESS PLAN	●	●				
A030	PARTITION TYPES	●			●		
A031	FLOORING / ROOFING ASSEMBLIES	●			●		
A040	DOOR SCHEDULE	●	●		●		●
A041	DOOR DETAILS	●			●		
A042	DOOR DETAILS	●	●				
A043	FIRE DOOR DETAILS	●					
A050	WINDOW SCHEDULE & DETAILS	●	●		●		
A051	WINDOW DETAILS	●					
A055	STOREFRONT SCHEDULE	●			●		
A056	STOREFRONT SCHEDULE	●			●		●
A057	STOREFRONT SCHEDULE	●			●		
A058	STOREFRONT DETAILS	●			●		●
A059	STOREFRONT DETAILS	●					
A060	UNIT SCHEDULE	●					
A101	BLDG 1 - FIRST FLOOR PLAN	●					
A101A	BLDG 1-A - ENLARGED FIRST FLOOR PLAN	●			●	●	
A101B	BLDG 1-B & C - ENLARGED FIRST FLOOR PLAN	●					
A101D	BLDG 1-D - ENLARGED FIRST FLOOR PLAN	●				●	
A102	BLDG 1 - SECOND FLOOR PLAN	●					
A102A	BLDG 1-A - ENLARGED SECOND FLOOR PLAN	●				●	
A102B	BLDG 1-B & C - ENLARGED SECOND FLOOR PLAN	●					
A102D	BLDG 1-D - ENLARGED SECOND FLOOR PLAN	●				●	
A103	BLDG 1 - THIRD FLOOR PLAN	●					
A103A	BLDG 1-A - ENLARGED THIRD FLOOR PLAN	●				●	
A103B	BLDG 1-B & C - ENLARGED THIRD FLOOR PLAN	●					
A103D	BLDG 1-D - ENLARGED THIRD FLOOR PLAN	●				●	
A110	BLDG 1 - ROOF PLAN	●	●		●		
A121	BLDG 2 - FIRST FLOOR PLAN	●					●
A121A	BLDG 2-A - ENLARGED FIRST FLOOR PLAN	●				●	●
A121B	BLDG 2-B - ENLARGED FIRST FLOOR PLAN	●			●		●
A121C	BLDG 2-C - ENLARGED FIRST FLOOR PLAN	●			●		
A122	BLDG 2 - SECOND FLOOR PLAN	●					
A122A	BLDG 2-A - ENLARGED SECOND FLOOR PLAN	●				●	
A122B	BLDG 2-B - ENLARGED SECOND FLOOR PLAN	●					
A122C	BLDG 2-C - ENLARGED SECOND FLOOR PLAN	●					
A123	BLDG 2 - THIRD FLOOR PLAN	●					
A123A	BLDG 2-A - ENLARGED THIRD FLOOR PLAN	●				●	
A123B	BLDG 2-B - ENLARGED THIRD FLOOR PLAN	●					
A123C	BLDG 2-C - ENLARGED THIRD FLOOR PLAN	●					
A124	BLDG 2 - ROOF PLAN	●	●		●		
A130	BLDG 1 - FIRST FLOOR RCP	●					
A131	BLDG 1 - SECOND FLOOR RCP	●					
A132	BLDG 1 - THIRD FLOOR RCP	●					
A140	BLDG 2 - FIRST FLOOR RCP	●					
A141	BLDG 2 - SECOND FLOOR RCP	●					
A142	BLDG 2 - THIRD FLOOR RCP	●					
A150	BLDG 1 - ENLARGED AMENITY PLAN	●					
A151	BLDG 1 - ENLARGED AMENITY RCP	●					
A160	BLDG 2 - ENLARGED AMENITY PLANS	●					
A200	BLDG 1 - OVERALL EXTERIOR ELEVATIONS	●			●		
A201	BLDG 1 - ENLARGED SOUTHWEST & WEST ELEVATIONS	●			●		
A202	BLDG 1 - ENLARGED SOUTH ELEVATIONS	●			●		
A203	BLDG 1 - ENLARGED EAST & NORTHEAST ELEVATIONS	●			●		
A204	BLDG 1 - ENLARGED NORTH & NORTHWEST ELEVATIONS	●			●	●	
A220	BLDG 2 - OVERALL EXTERIOR ELEVATIONS	●			●		●
A221	BLDG 2 - ENLARGED EAST ELEVATIONS	●			●	●	
A222	BLDG 2 - ENLARGED NORTH ELEVATIONS	●			●		●
A223	BLDG 2 - ENLARGED WEST ELEVATIONS	●			●	●	●
A224	BLDG 2 - ENLARGED SOUTH ELEVATIONS	●			●		●
A230	VENT & LOUVER ELEVATIONS	●			●		
A300	BUILDING 1 SECTIONS	●			●		
A301	BUILDING 2 SECTIONS	●			●		
A302	MAINTENANCE/POOL BUILDING & WALL SECTIONS		●				
A310	WALL SECTIONS	●			●		
A311	WALL SECTIONS	●			●		
A312	WALL SECTIONS	●			●		
A313	WALL SECTIONS	●			●		
A314	WALL SECTIONS	●			●		
A315	WALL SECTIONS	●			●		
A316	WALL SECTIONS	●			●		
A317	WALL SECTIONS	●			●		
A318	WALL SECTIONS	●			●		
A350	WALL SECTION DETAILS	●	●		●		
A351	WALL SECTION DETAILS	●			●		
A352	WALL SECTION DETAILS		●				
A360	TREX BALCONY DETAILS	●			●		
A361	CONCRETE BALCONY DETAILS	●					
A362	BALCONY RAILING DETAILS	●					
A365	BLDG 1 CANOPY PLANS & DETAILS	●					
A366	BLDG 2 CANOPY PLANS & DETAILS	●					
A370	COLUMN PLAN DETAILS	●					
A371	PLAN DETAILS	●	●				
A401	UNIT A1, A1.1 & A1.2 - PLANS AND ELEVATIONS	●					
A402	UNIT A2 - PLANS AND ELEVATIONS	●					
A403	UNIT A3 - PLANS AND ELEVATIONS	●					
A404	UNIT A4 - PLANS AND ELEVATIONS	●					
A405	UNIT A4-TYPE A - PLANS AND ELEVATIONS	●			●	●	
A406	UNIT A5 - PLANS AND ELEVATIONS	●					
A407	UNIT B1, B1.1, B1.2 & B1.3 - PLANS AND ELEVATIONS	●			●		
A408	UNIT B1 - TYPE A - PLANS AND ELEVATIONS	●			●	●	
A409	UNIT B2 - PLANS AND ELEVATIONS	●					
A410	UNIT B2-TYPE A - PLANS AND ELEVATIONS	●			●	●	
A411	UNIT B3 & B3.1 - PLANS AND ELEVATIONS	●					
A412	UNIT B4 - PLANS AND ELEVATIONS	●					
A413	UNIT C1 & C1.1 - PLANS AND ELEVATIONS	●					
A414	UNIT C2 & C2.1 - PLANS AND ELEVATIONS	●					
A415	UNIT C2 -TYPE A - PLANS AND ELEVATIONS	●			●	●	
A420	UNIT DETAILS	●					
A421	UNIT DETAILS	●					
A500	BLDG 1 STAIR A - PLAN & SECTIONS	●			●		
A501	BLDG 1 STAIR B - PLAN & SECTIONS	●			●		
A502	BLDG 1 STAIR C - PLAN & SECTIONS	●			●		
A503	BLDG 1 STAIR D - PLAN & SECTIONS	●			●		
A520	BLDG 2 STAIR A - PLAN & SECTIONS	●			●		
A521	BLDG 2 STAIR B - PLAN & SECTIONS	●			●		
A522	BLDG 2 STAIR C - PLAN & SECTIONS	●			●		
A523	BLDG 2 STAIR D - PLAN & SECTIONS	●			●		
A530	STAIR DETAILS	●					
A540	BLDG 1 ELEVATOR - PLAN & SECTIONS	●			●		

	ARCHITECTURAL	BID / PERMIT SET 7.15.2021	PERMIT COMMENTS 8.17.2021	FOUNDATION PERMIT 10.11.2021	REVISION 1 - 2.11.2022	REVISION 2 - 3.1.2022	REVISION 3 - 5.12.2022
A541	BLDG 2 ELEVATOR - PLAN & SECTIONS	●			●		
A600	BLDG 1 - INTERIOR ELEVATIONS	●	●		●		
A601	BLDG 1 - INTERIOR ELEVATIONS	●	●				
A650	BLDG 2 - INTERIOR ELEVATIONS	●	●				
A651	BLDG 2 - INTERIOR ELEVATIONS	●					
A700	FINISH SCHEDULE	●					
A701	BLDG 1 - FIRST FLOOR FINISH PLAN	●	●				
A702	BLDG 1 - SECOND FLOOR FINISH PLAN	●					
A703	BLDG 1 - THIRD FLOOR FINISH PLAN	●					
A704	BLGD 1 - ENLARGED AMENITY FINISH PLAN	●					
A720	BLDG 2 - FIRST FLOOR FINISH PLAN	●	●				
A721	BLDG 2 - SECOND FLOOR FINISH PLAN	●					
A722	BLDG 2 - THIRD FLOOR FINISH PLAN	●					
A723	BLDG 2 - ENLARGED AMENITY FINISH PLAN	●					
A750	INTERIOR DETAILS	●			●		

	STRUCTURAL	BID / PERMIT SET 7.15.2021	PERMIT COMMENTS 8.17.2021	FOUNDATION PERMIT 10.11.2021	REVISION 1 - 2.11.2022	REVISION 2 - 3.1.2022	REVISION 3 - 5.12.2022
S001	GENERAL NOTES	●		●			
S002	SCHEDULES & CMU DETAILS	●		●			
S003	TYPICAL WOOD GRAVITY SCHEDULES & DETAILS	●					
S004	TYPICAL WOOD LATERAL SCHEDULES & DETAILS	●		●			
S005	TYPICAL WOOD DETAILS	●					
S006	TYPICAL WOOD DETAILS	●					
S007	TYPICAL WOOD DETAILS	●					
S022	MAINTENANCE SHED/POOL HOUSE	●	●	●			●
S023	MAINTENANCE SHED/POOL HOUSE		●				●
S101	FOUNDATION PLAN	●					
S101A	FOUNDATION PLAN - AREA A	●		●			
S101B	FOUNDATION PLAN - AREA B	●		●	●		
S101C	FOUNDATION PLAN - AREA C	●		●			
S102	SECOND FLOOR FRAMING PLAN	●					
S102A	SECOND FLOOR FRAMING PLAN- AREA A	●					
S102B	SECOND FLOOR FRAMING PLAN- AREA B	●			●		
S102C	SECOND FLOOR FRAMING PLAN- AREA C	●					
S103	THIRD FLOOR FRAMING PLAN	●					
S103A	THIRD FLOOR FRAMING PLAN- AREA A	●					
S103B	THIRD FLOOR FRAMING PLAN- AREA B	●			●		
S103C	THIRD FLOOR FRAMING PLAN- AREA C	●					
S104	ROOF FRAMING PLAN	●					
S104A	ROOF FRAMING PLAN- AREA A	●					
S104B	ROOF FRAMING PLAN- AREA B	●			●		
S104C	ROOF FRAMING PLAN- AREA C	●					
S121	BLDG 2 - FOUNDATION PLAN	●		●			
S121A	BLDG 2- FOUNDATION PLAN - AREA A	●		●			
S121B	BLDG 2- FOUNDATION PLAN - AREA B	●		●	●		
S121C	BLDG 2- FOUNDATION PLAN - AREA C	●		●			
S122	BLDG 2 - SECOND FLOOR FRAMING PLAN	●					
S122A	BLDG 2 - SECOND FLOOR FRAMING PLAN - AREA A	●					
S122B	BLDG 2- SECOND FLOOR FRAMING PLAN - AREA B	●			●		
S122C	BLDG 2- SECOND FLOOR FRAMING PLAN - AREA C	●					
S123	BLDG 2 - THIRD FLOOR FRAMING PLAN	●					
S123A	BLDG 2- THIRD FLOOR FRAMING PLAN - AREA A	●					
S123B	BLDG 2- THIRD FLOOR FRAMING PLAN - AREA B	●			●		
S123C	BLDG 2- THIRD FLOOR FRAMING PLAN - AREA C	●					
S124	BLDG 2 - ROOF FRAMING PLAN	●					
S124A	BLDG 2- ROOF FRAMING PLAN - AREA A	●					
S124B	BLDG 2- ROOF FRAMING PLAN - AREA B	●			●		
S124C	BLDG 2- ROOF FRAMING PLAN - AREA C	●					
S200	FOUNDATION SECTIONS	●		●			
S201	FOUNDATION SECTIONS	●		●			
S202	FOUNDATION SECTIONS	●		●			
S300	STEEL FRAMING SECTIONS	●					
S301	STEEL FRAMING SECTIONS	●					
S330	WOOD FLOOR FRAMING SECTIONS	●		●			
S331	WOOD FLOOR FRAMING SECTIONS	●					
S332	WOOD FLOOR FRAMING SECTIONS	●			●		
S333	WOOD FLOOR FRAMING SECTIONS	●					
S340	WOOD ROOF FRAMING SECTIONS	●					
S341	WOOD ROOF FRAMING SECTIONS	●					
S342	WOOD ROOF FRAMING SECTIONS	●					

2

	UNDERGROUND PLUMBING & ELECTRICAL	BID / PERMIT SET 7.15.2021	PERMIT COMMENTS 8.17.2021	FOUNDATION PERMIT 10.11.2021	REVISION 1 - 2.11.2022	REVISION 2 - 3.1.2022	REVISION 3 - 5.12.2022
UG101	BLDG 1-A, PARTIAL FIRST FLOOR PLAN - BELOW GRADE			●			
UG102	BLDG 1-B, PARTIAL FIRST FLOOR PLAN - BELOW GRADE			●			
UG103	BLDG 1-C, PARTIAL FIRST FLOOR PLAN - BELOW GRADE			●			
UG104	BLDG 2-A, PARTIAL FIRST FLOOR PLAN - BELOW GRADE			●			
UG105	BLDG 2-B, PARTIAL FIRST FLOOR PLAN - BELOW GRADE			●			
UG106	BLDG 2-C, PARTIAL FIRST FLOOR PLAN - BELOW GRADE			●			

	ELECTRICAL	BID / PERMIT SET 7.15.2021	PERMIT COMMENTS 8.17.2021	FOUNDATION PERMIT 10.11.2021	REVISION 1 - 2.11.2022	REVISION 2 - 3.1.2022	REVISION 3 - 5.12.2022
E001	SITE PLAN - PHOTOMETRIC	●			●		
E001a	SITE PLAN - PHOTOMETRIC				●		
E101	BLDG 1-A, PARTIAL FIRST FLOOR PLAN - ELECTRICAL	●					
E102	BLDG 1-B, PARTIAL FIRST FLOOR PLAN - ELECTRICAL	●					
E102a	BLDG 1-B, PARTIAL FIRST FLOOR PLAN - ELECTRICAL	●	●		●		
E102b	BLDG 1-B, PARTIAL FIRST FLOOR PLAN - ELECTRICAL	●				●	
E103	BLDG 1-C, PARTIAL FIRST FLOOR PLAN - ELECTRICAL	●				●	
E104	BLDG 1-A, PARTIAL SECOND FLOOR PLAN - ELECTRICAL	●					
E105	BLDG 1-B, PARTIAL SECOND FLOOR PLAN - ELECTRICAL	●					
E106	BLDG 1-C, PARTIAL SECOND FLOOR PLAN - ELECTRICAL	●					
E107	BLDG 1-A, PARTIAL THIRD FLOOR PLAN - ELECTRICAL	●					
E108	BLDG 1-B, PARTIAL THIRD FLOOR PLAN - ELECTRICAL	●					
E109	BLDG 1-C, PARTIAL THIRD FLOOR PLAN - ELECTRICAL	●					
E110	BLDG 1-A, PARTIAL ROOF PLAN -ELECTRICAL	●					
E111	BLDG 1-B, PARTIAL ROOF PLAN -ELECTRICAL	●					
E112	BLDG 1-C, PARTIAL ROOF PLAN -ELECTRICAL	●					
E113	BLDG 2-A, PARTIAL FIRST FLOOR PLAN - ELECTRICAL	●				●	
E114	BLDG 2-B, PARTIAL FIRST FLOOR PLAN - ELECTRICAL	●					
E114a	BLDG 2-B, PARTIAL FIRST FLOOR PLAN - ELECTRICAL	●	●		●		●
E115	BLDG 2-C, PARTIAL FIRST FLOOR PLAN - ELECTRICAL	●					
E116	BLDG 2-A, PARTIAL SECOND FLOOR PLAN - ELECTRICAL	●					
E117	BLDG 2-B, PARTIAL SECOND FLOOR PLAN - ELECTRICAL	●					
E118	BLDG 2-C, PARTIAL SECOND FLOOR PLAN - ELECTRICAL	●					
E119	BLDG 2-A, PARTIAL THIRD FLOOR PLAN - ELECTRICAL	●					
E120	BLDG 2-B, PARTIAL THIRD FLOOR PLAN - ELECTRICAL	●					
E121	BLDG 2-C, PARTIAL THIRD FLOOR PLAN - ELECTRICAL	●					
E122	BLDG 2-A, PARTIAL ROOF PLAN -ELECTRICAL	●					
E123	BLDG 2-B, PARTIAL ROOF PLAN -ELECTRICAL	●					
E124	BLDG 2-C, PARTIAL ROOF PLAN -ELECTRICAL	●					
E201	TYPICAL UNIT PLANS - ELECTRICAL	●			●		●
E202	TYPICAL UNIT PLANS - ELECTRICAL	●	●		●		●
E203	TYPICAL UNIT PLANS - ELECTRICAL	●			●		●
E301	ELECTRICAL DETAILS	●					
E302	ELECTRICAL DETAILS	●					
E303	ELECTRICAL DETAILS	●					
E304	ELECTRICAL DETAILS	●	●		●		
E305	ELECTRICAL DETAILS	●	●		●	●	●
E306	ELECTRICAL DETAILS	●					

	MECHANICAL	BID / PERMIT SET 7.15.2021	PERMIT COMMENTS 8.17.2021	FOUNDATION PERMIT 10.11.2021	REVISION 1 - 2.11.2022	REVISION 2 - 3.1.2022	REVISION 3 - 5.12.2022
M101	BLDG 1-A, PARTIAL FIRST FLOOR PLAN - HVAC	●					
M102	BLDG 1-B, PARTIAL FIRST FLOOR PLAN - HVAC	●					
M103	BLDG 1-C, PARTIAL FIRST FLOOR PLAN - HVAC	●					
M104	BLDG 1-A, PARTIAL SECOND FLOOR PLAN - HVAC	●					
M105	BLDG 1-B, PARTIAL SECOND FLOOR PLAN - HVAC	●					
M106	BLDG 1-C, PARTIAL SECOND FLOOR PLAN - HVAC	●					
M107	BLDG 1-A, PARTIAL THIRD FLOOR PLAN - HVAC	●					
M108	BLDG 1-B, PARTIAL THIRD FLOOR PLAN - HVAC	●					
M109	BLDG 1-C, PARTIAL THIRD FLOOR PLAN - HVAC	●					
M110	BLDG 1-A, PARTIAL ROOF PLAN -HVAC	●					
M111	BLDG 1-B, PARTIAL ROOF PLAN -HVAC	●					
M112	BLDG 1-C, PARTIAL ROOF PLAN -HVAC	●					
M113	BLDG 2-A, PARTIAL FIRST FLOOR PLAN – HVAC	●					
M114	BLDG 2-B, PARTIAL FIRST FLOOR PLAN - HVAC	●					
M115	BLDG 2-C, PARTIAL FIRST FLOOR PLAN - HVAC	●					
M116	BLDG 2-A, PARTIAL SECOND FLOOR PLAN - HVAC	●					
M117	BLDG 2-B, PARTIAL SECOND FLOOR PLAN - HVAC	●					
M118	BLDG 2-C, PARTIAL SECOND FLOOR PLAN - HVAC	●	●				
M119	BLDG 2-A, PARTIAL THIRD FLOOR PLAN - HVAC	●					
M120	BLDG 2-B, PARTIAL THIRD FLOOR PLAN - HVAC	●					
M121	BLDG 2-C, PARTIAL THIRD FLOOR PLAN - HVAC	●					
M122	BLDG 2-A, PARTIAL ROOF PLAN -HVAC	●					
M123	BLDG 2-B, PARTIAL ROOF PLAN -HVAC	●					
M124	BLDG 2-C, PARTIAL ROOF PLAN -HVAC	●					
M201	TYPICAL UNIT PLANS - HVAC	●					
M202	TYPICAL UNIT PLANS - HVAC	●					
M203	TYPICAL UNIT PLANS - HVAC	●			●		
ME101	SITE PLAN - MECH/ELEC	●	●		●		●
ME201	MAINTENANCE BLDG - PLUMBING	●	●		●	●	●
ME202	MAINTENANCE BLDG - HVAC		●			●	●
ME203	MAINTENANCE BLDG - ELECTRICAL		●		●	●	●
MP101	MECHANICAL DETAILS	●					
MP102	MECHANICAL DETAILS	●					
MP103	MECHANICAL DETAILS	●					
MP104	MECHANICAL SCHEDULES	●	●				●

	PLUMBING	BID / PERMIT SET 7.15.2021	PERMIT COMMENTS 8.17.2021	FOUNDATION PERMIT 10.11.2021	REVISION 1 - 2.11.2022	REVISION 2 - 3.1.2022	REVISION 3 - 5.12.2022
P101	BLDG 1-A, PARTIAL FIRST FLOOR PLAN - PLUMBING	●	●				
P102	BLDG 1-B, PARTIAL FIRST FLOOR PLAN - PLUMBING	●					
P103	BLDG 1-C, PARTIAL FIRST FLOOR PLAN - PLUMBING	●					
P104	BLDG 1-A, PARTIAL SECOND FLOOR PLAN - PLUMBING	●					
P105	BLDG 1-B, PARTIAL SECOND FLOOR PLAN - PLUMBING	●					
P106	BLDG 1-C, PARTIAL SECOND FLOOR PLAN - PLUMBING	●					
P107	BLDG 1-A, PARTIAL THIRD FLOOR PLAN - PLUMBING	●					
P108	BLDG 1-B, PARTIAL THIRD FLOOR PLAN - PLUMBING	●					
P109	BLDG 1-C, PARTIAL THIRD FLOOR PLAN - PLUMBING	●					
P110	BLDG 2-A, PARTIAL FIRST FLOOR PLAN - PLUMBING	●	●				
P111	BLDG 2-B, PARTIAL FIRST FLOOR PLAN - PLUMBING	●					
P112	BLDG 2-C, PARTIAL FIRST FLOOR PLAN - PLUMBING	●					
P113	BLDG 2-A, PARTIAL SECOND FLOOR PLAN - PLUMBING	●					
P114	BLDG 2-B, PARTIAL SECOND FLOOR PLAN - PLUMBING	●					
P115	BLDG 2-C, PARTIAL SECOND FLOOR PLAN - PLUMBING	●					
P116	BLDG 2-A, PARTIAL THIRD FLOOR PLAN - PLUMBING	●					
P117	BLDG 2-B, PARTIAL THIRD FLOOR PLAN - PLUMBING	●					
P118	BLDG 2-C, PARTIAL THIRD FLOOR PLAN - PLUMBING	●					
P119	PLUMBING RISERS	●					
P120	PLUMBING RISERS	●					
P121	PLUMBING RISERS	●					
P201	TYPICAL UNIT PLANS - PLUMBING	●					
P202	TYPICAL UNIT PLANS - PLUMBING	●					
P203	TYPICAL UNIT PLANS - PLUMBING	●			●		

	TELECOM	BID / PERMIT SET 7.15.2021	PERMIT COMMENTS 8.17.2021	FOUNDATION PERMIT 10.11.2021	REVISION 1 - 2.11.2022	REVISION 2 - 3.1.2022	REVISION 3 - 5.12.2022
T101	BLDG 1-A FIRST FLOOR PLAN - TELECOM	●					●
T102	BLDG 2-A, PARTIAL FIRST FLOOR PLAN - TELECOM	●					●
T201	TELECOM DETAILS	●	●				●

RELEASED FOR CONSTRUCTION
As Noted on Plans Review
Development Services Department
Lee's Summit, Missouri
05/23/2022

5.12.2022

ARCHITECT
TR¡ ARCHITECTS

STRUCTURAL ENGINEER
BOB D CAMPBELL & COMPANY

CIVIL ENGINEER
SM ENGINEERING

GENERAL CONTRACTOR
BRINKMANN CONSTRUCTORS

MECHANICAL ENGINEER
LATIMER SOMMERS & ASSOCIATES

PLUMBING ENGINEER
LATIMER SOMMERS & ASSOCIATES

ELECTRICAL ENGINEER
LATIMER SOMMERS & ASSOCIATES

Together Development

The Signature at West Pryor

2100 AND 2150 NW LOWENSTEIN DR.
LEE'S SUMMIT, MISSOURI 64081

TR¡ ARCHITECTS

TR¡ Architects
1790 S. Brentwood Blvd.
St. Louis, Missouri 63144
T: 314-395-9750
www.trlarchitects.com
© Copyright 2021

DATE: 7.15.2021

REVISIONS

2	FOUNDATION PERMIT	10.11.2021
4	Revision 2	3.1.2022

DWG BY MKSS

TR¡ PROJECT NO. 20-001

SHEET NO.
A001
SHEET INDEX

LIFE SAFETY GENERAL NOTES

1. ALL RESIDENTIAL CORRIDORS ARE 1-HOUR FIRE RATED UNLESS OTHERWISE NOTED.
2. ALL DOORS LEADING TO UNITS ARE 20 MINUTES RATED UNLESS OTHERWISE NOTED.
3. AREA OF REFUGE NOT REQUIRED IN STAIRS PER SECTION 1009.3.3 EXCEPTION 5 2018 IBC.
4. AREA OF REFUGE NOT REQUIRED AT ELEVATOR PER SECTION 1009.4.2 EXCEPTION 2 2018 IBC.
5. MAXIMUM AREA OF EXTERIOR WALL UNPROTECTED OPENING IS BASED ON FIRE SEPARATION DISTANCE AND DEGREE OF OPENING PROTECTION STATED ON TABLE 705.8 OF 2018 IBC.
6. ALL EXTERIOR LOAD BEARING WALLS (WOOD CONSTRUCTION) TO BE 1-HOUR FIRE RATED PER UL U356 UNLESS OTHERWISE NOTED.
7. ALL LOAD BEARING WALLS INSIDE UNITS TO BE 1-HOUR FIRE RATED PER UL U305. REFER TO UNIT PLANS FOR LOCATIONS.
8. GENERAL CONTRACTOR TO FURNISHED AND INSTALL A-B-C RATED FIRE EXTINGUISHERS AT 4'-0" A.F.F. AS REQUIRED BY AUTHORITY HAVING JURISDICTION. MAXIMUM TRAVEL DISTANCE OF 75'-0" FOR PLACEMENT AND PER 906 (NFPA 10). SEE PLAN FOR PROPOSED LOCATIONS. FINAL LOCATIONS AS REQUIRED BY AUTHORITY HAVING JURISDICTION
9. STEEL COLUMN WRAP DETAILS ON SHEETS A058, A059, & A370

SYMBOL LEGEND

AREA: 800 SF / 40 OCC.
OCCUPANTS PER UNIT
NUMBER OF OCCUPANTS
PATH OF EGRESS
PROPERTY LINE
OCCUPANCY: A | AREA: 800 SF | FLOOR AREA PER OCCUPANT: 20 | NUMBER OF OCCUPANTS: 40
1-HR STAIR SHAFT
1-HR FIRE PARTITION
1-HR FIRE BARRIER
2-HR FIRE WALL
2-HR SHAFT WALL
1-HR INTERIOR BEARING WALL
FEC — FIRE EXTINGUISHER CABINET
* — STEEL COLUMNS TO HAVE 1 HR PROTECTION PER UL X526, STEEL BEAMS TO BE 1 HR RATED PER UL X649
@ — STEEL COLUMNS TO HAVE 1 HR PROTECTION PER UL X650

BUILDING CODES ADOPTED

Building Code	2018 International Building Code (IBC)
Mechanical Code	2018 International Mechanical Code (IMC)
Plumbing Code	2018 International Plumbing Code (IPC)
Fuel Gas Code	2018 International Fuel Gas Code
Electrical Code	2017 National Electrical Code
Energy Code	2018 International Energy Conservation Code (IECC)

ALLOWABLE AREA
Equation 5-2 (506.2.3)- SINGLE USE
Aa = [At + (NS x If)] x Sa

Aa = Allowable area
At= Tabular area factor (table 506.2)
NS= Tabular area factor for non sprinkler building (table 506.2)
If= area factor increase due to frontage percent per 506.3 (equation 5-5)
Sa= Number of building stories above grade plan (no more than 3, 4 with sprinkler)

Equation 5-3 (506.2.4) - MIXED USE
Aa = [At + (NS x If)]

Aa = Allowable area
At= Tabular area factor (table 506.2)
NS= Tabular area factor for non sprinkler building (table 506.2)
If= area factor increase due to frontage percent per 506.3 (equation 5-5)
-Each story of mixed use occupancy building shall be calculated separately and individually comply with the allowable area based on the most restrictive occupancy per 508.3.2 and 503.1

FONTAGE INCREASE
Equation 5-5 (506.3)
If = (F/P - 0.25) W / 30

If= Area increase due to frontage
F= Building Perimeter on public way/ open space (min. 20 ft.)
P= Building Perimeter (total)
W= Width of public way / open space

BUILDING 2A

Construction Type	5A
Use Group	R2
Fire Protection	Fully–Sprinklered (NFPA 13R)
Accessibility	2010 ADA Guidelines & 2009 ICC/ANSI A117.1
Housing Act	Fair Housing Act

GENERAL BUILDING LIMITATIONS (Chapter 5 & 6) — BUILDING 2A – TYPE 5A

Allowed Building Height (504.3 & 504.4) 4 / 60' Story / Feet
Actual Building Height (504.3) 3 / 40' - 8" Story / Feet

ALLOWABLE AREA
Equation 5-2 (506.2.3)
Aa = [At + (NS x If)] x Sa

Tabular area factor: 12,000
NS area factor: 12,000

Equation 5-5 (506.3)
If = (F/P - 0.25) W / 30

F= 147+87+158=392
P= 533
W=30

If = (392 / 533 - 0.25) x 30 /30
If = (.735 - .25) x 1
If = .485

Aa = [12,000 + (12,000 x .485)] x 3
Aa = 53,460
Building 2A Total Actual Area: 32,289 SF

BUILDING 2B

Construction Type	5A
Use Group	R2, A2 & B
Fire Protection	Fully–Sprinklered (NFPA 13R)
Accessibility	2010 ADA Guidelines & 2009 ICC/ANSI A117.1
Housing Act	Fair Housing Act

GENERAL BUILDING LIMITATIONS (Chapter 5 & 6) — BUILDING 2B – TYPE 5A

Allowed Building Height (504.3 & 504.4) R2: 4 / 60' Story / Feet
Allowed Building Height (504.3 & 504.4) A2: 3 / 70 Story / Feet
Allowed Building Height (504.3 & 504.4) B: 4 / 70' Story / Feet
Actual Building Height R2: 3 / 40' - 8" Story / Feet
Actual Building Height A2 / B: 1 / 10' - 8" & 21'-4"

ALLOWABLE AREA
Equation 5-3 (506.2.4)
Aa = [At + (NS x If)]

R2
Tabular area factor: 12,000
NS area factor: 12,000

A2
Tabular area factor: 34,500
NS area factor: 11,500

B
Tabular area factor: 54,000
NS area factor: 18,000

Equation 5-5 (506.3.3)
If = (F/P - 0.25) W / 30

F= 42+39+131+123=335
P= 405
W=30

If = (355 / 405 - 0.25) x 30 /30
If = (.877 - .25) x 1
If = .627

FIRST FLOOR AREA
Aa = [12,000 + (12,000 x .627)]
Aa = 19,524
First Floor Total Actual Area: 12,888 SF

SECOND FLOOR AREA
Aa = [12,000 + (12,000 x .627)]
Aa = 19,524
Second Floor Total Actual Area: 12,766 SF

THIRD FLOOR AREA
Aa = [12,000 + (12,000 x .627)]
Aa = 19,524
Third Floor Total Actual Area: 12,692 SF

BUILDING 2C

Construction Type	5A
Use Group	R2
Fire Protection	Fully–Sprinklered (NFPA 13R)
Accessibility	2010 ADA Guidelines & 2009 ICC/ANSI A117.1
Housing Act	Fair Housing Act

GENERAL BUILDING LIMITATIONS (Chapter 5 & 6) — BUILDING 2C – TYPE 5A

Allowed Building Height (504.3 & 504.4) 4 / 60' Story / Feet
Actual Building Height (504.3) 3 / 40' - 8" Story / Feet

ALLOWABLE AREA
Equation 5-2 (506.2.3)
Aa = [At + (NS x If)] x Sa

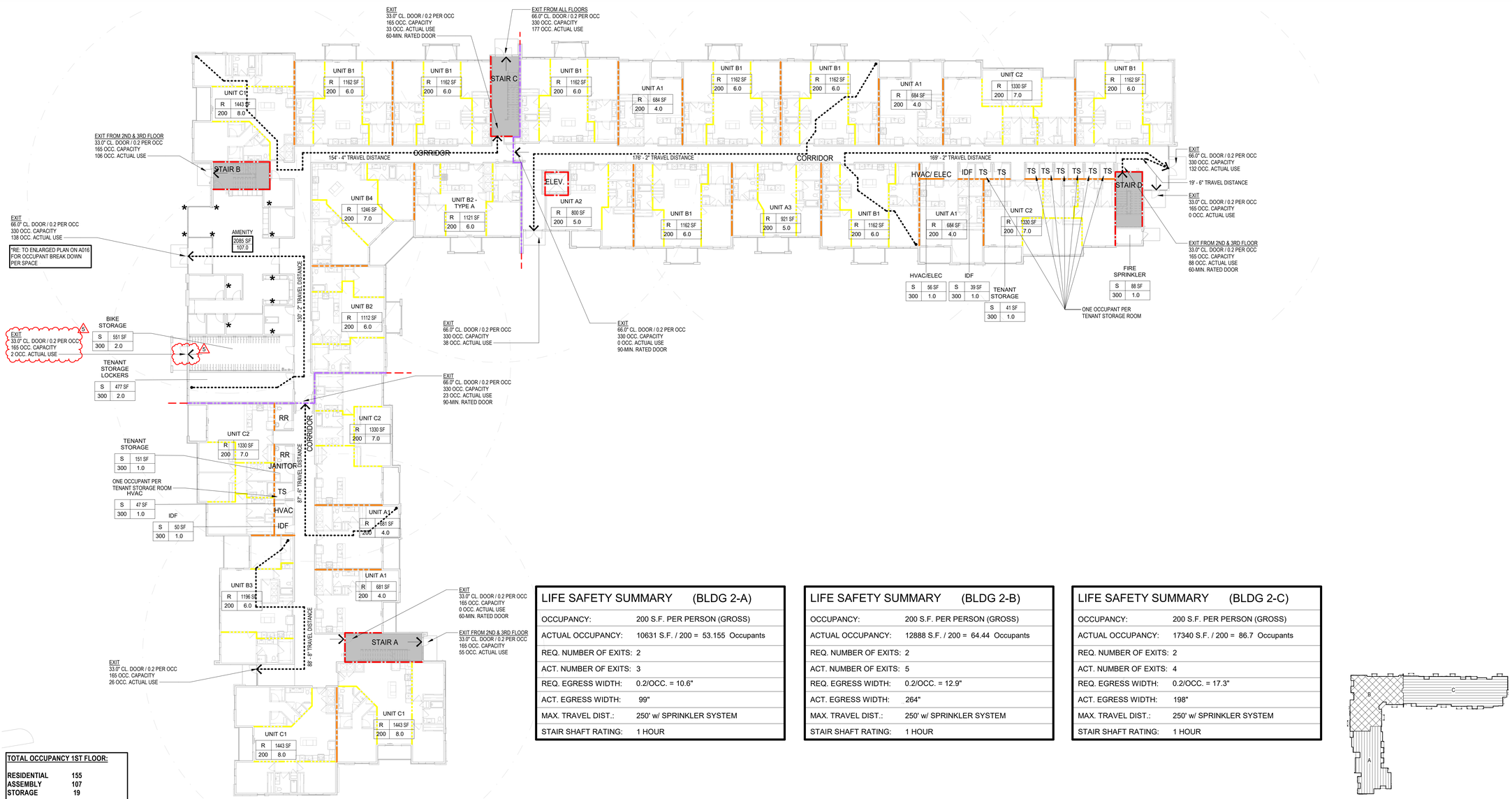
Tabular area factor: 12,000
NS area factor: 12,000

Equation 5-5 (506.3)
If = (F/P - 0.25) W / 30

F= 245+74+246=565
P= 616
W=30

If = (565 / 616 - 0.25) x 30 /30
If = (917 - .25) x 1
If = .667

Aa = [12,000 + (12,000 x .667)] x 3
Aa = 60,012
Building 2C Total Actual Area: 52,050 SF



TOTAL OCCUPANCY 1ST FLOOR:

RESIDENTIAL	155
ASSEMBLY	107
STORAGE	19
TOTAL	281

LIFE SAFETY SUMMARY (BLDG 2-A)

OCCUPANCY:	200 S.F. PER PERSON (GROSS)
ACTUAL OCCUPANCY:	10631 S.F. / 200 = 53.155 Occupants
REQ. NUMBER OF EXITS:	2
ACT. NUMBER OF EXITS:	3
REQ. EGRESS WIDTH:	0.2/OCC. = 10.6"
ACT. EGRESS WIDTH:	99"
MAX. TRAVEL DIST.:	250' w/ SPRINKLER SYSTEM
STAIR SHAFT RATING:	1 HOUR

LIFE SAFETY SUMMARY (BLDG 2-B)

OCCUPANCY:	200 S.F. PER PERSON (GROSS)
ACTUAL OCCUPANCY:	12888 S.F. / 200 = 64.44 Occupants
REQ. NUMBER OF EXITS:	2
ACT. NUMBER OF EXITS:	5
REQ. EGRESS WIDTH:	0.2/OCC. = 12.9"
ACT. EGRESS WIDTH:	264"
MAX. TRAVEL DIST.:	250' w/ SPRINKLER SYSTEM
STAIR SHAFT RATING:	1 HOUR

LIFE SAFETY SUMMARY (BLDG 2-C)

OCCUPANCY:	200 S.F. PER PERSON (GROSS)
ACTUAL OCCUPANCY:	17340 S.F. / 200 = 86.7 Occupants
REQ. NUMBER OF EXITS:	2
ACT. NUMBER OF EXITS:	4
REQ. EGRESS WIDTH:	0.2/OCC. = 17.3"
ACT. EGRESS WIDTH:	198"
MAX. TRAVEL DIST.:	250' w/ SPRINKLER SYSTEM
STAIR SHAFT RATING:	1 HOUR

KEYPLAN BLDG 2

4 **BLDG 2 FIRST FLOOR - LIFE SAFETY PLAN**
SCALE: 1/16" = 1'-0"

RELEASED FOR CONSTRUCTION
As Noted on Plans Review
Development Services Department
Lee's Summit, Missouri
05/23/2022

512.2022

ARCHITECT
STRUCTURAL ENGINEER
CIVIL ENGINEER
GENERAL CONTRACTOR
MECHANICAL ENGINEER
PLUMBING ENGINEER
ELECTRICAL ENGINEER

TR.i ARCHITECTS
BOB D CAMPBELL & COMPANY
SM ENGINEERING
BRINKMANN CONSTRUCTORS
LATIMER SOMMERS & ASSOCIATES
LATIMER SOMMERS & ASSOCIATES
LATIMER SOMMERS & ASSOCIATES

Togethadd DEVELOPMENT

The Signature at West Pryor

2100 AND 2150 NW LOWENSTEIN DR.
LEE'S SUMMIT, MISSOURI 64081

TRi ARCHITECTS

TRi Architects
1790 S. Brentwood Blvd.
St. Louis, Missouri 63144
T: 314-395-9750
www.triarchitects.com

© Copyright - 2021

DATE: 7.15.2021

REVISIONS

5	Revision 3	5.12.2022

DWG BY MKSS
TRi PROJECT NO. 20-001
SHEET NO.
A013
BLDG 2 - LIFE SAFETY PLAN

RELEASED FOR CONSTRUCTION
As Noted on Plans Review
Development Services Department
Lee's Summit, Missouri
05/23/2022

LIFE SAFETY GENERAL NOTES

1. ALL RESIDENTIAL CORRIDORS ARE 1-HOUR FIRE RATED UNLESS OTHERWISE NOTED.
2. ALL DOORS LEADING TO UNITS ARE 20 MINUTES RATED UNLESS OTHERWISE NOTED.
3. AREA OF REFUGE NOT REQUIRED IN STAIRS PER SECTION 1009.3.3 EXCEPTION 5 2018 IBC.
4. AREA OF REFUGE NOT REQUIRED AT ELEVATOR PER SECTION 1009.4.2 EXCEPTION 2 2018 IBC.
5. MAXIMUM AREA OF EXTERIOR WALL UNPROTECTED OPENING IS BASED ON FIRE SEPARATION DISTANCE AND DEGREE OF OPENING PROTECTION STATED ON TABLE 705.8 OF 2018 IBC.
6. ALL EXTERIOR LOAD BEARING WALLS (WOOD CONSTRUCTION) TO BE 1-HOUR FIRE RATED PER UL U356 UNLESS OTHERWISE NOTED.
7. ALL LOAD BEARING WALLS INSIDE UNITS TO BE 1-HOUR FIRE RATED PER UL U305. REFER TO UNIT PLANS FOR LOCATIONS.
8. GENERAL CONTRACTOR TO FURNISHED AND INSTALL A-B-C RATED FIRE EXTINGUISHERS AT 4'-0" A.F.F. AS REQUIRED BY AUTHORITY HAVING JURISDICTION. MAXIMUM TRAVEL DISTANCE OF 75'-0" FOR PLACEMENT AND PER 906 (NFPA 10). SEE PLAN FOR PROPOSED LOCATIONS. FINAL LOCATIONS AS REQUIRED BY AUTHORITY HAVING JURISDICTION
9. STEEL COLUMN WRAP DETAILS ON SHEETS A058, A059, & A370

SYMBOL LEGEND

AREA
800 SF
40 OCC.
OCCUPANTS PER UNIT
NUMBER OF OCCUPANTS

PATH OF EGRESS

PROPERTY LINE

OCCUPANCY | AREA
A | 800 SF
20 | 40
FLOOR AREA PER OCCUPANT | NUMBER OF OCCUPANTS

1-HR STAIR SHAFT

1-HR FIRE PARTITION

1-HR FIRE BARRIER

2-HR FIRE WALL

2-HR SHAFT WALL

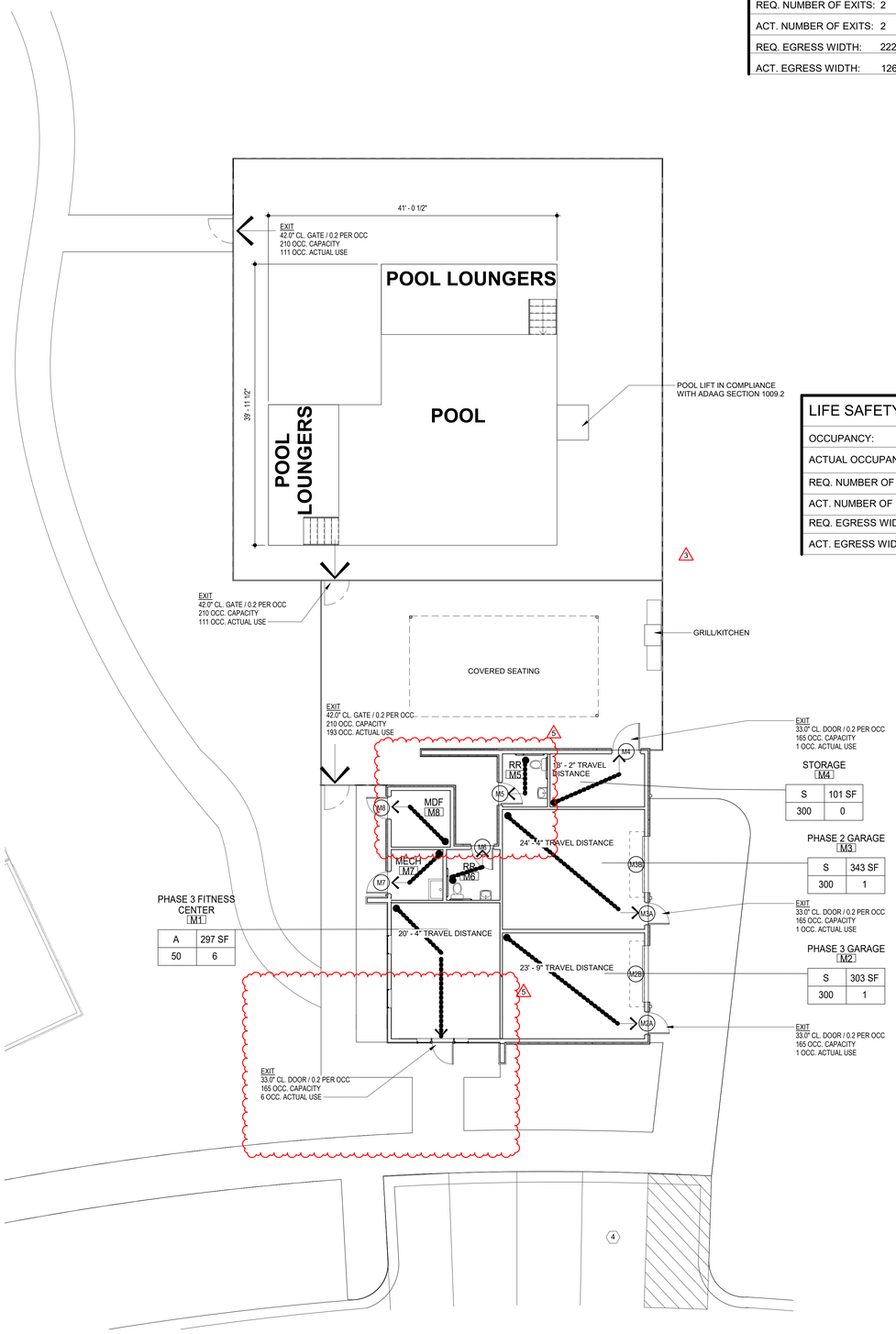
1-HR INTERIOR BEARING WALL

FEC — FIRE EXTINGUISHER CABINET

* — STEEL COLUMNS TO HAVE 1 HR PROTECTION PER UL X526, STEEL BEAMS TO BE 1 HR RATED PER UL X649

@ — STEEL COLUMNS TO HAVE 1 HR PROTECTION PER UL X650

LIFE SAFETY SUMMARY (POOL & DECK)	
OCCUPANCY: DECK 15 S.F. / PERSON	POOL 20 S.F. / PERSON
ACTUAL OCCUPANCY:	DECK 2340 S.F. / 15 = 156 OCC. POOL 1319 S.F. /20 = 66 OCC. TOTAL = 222 OCC.
REQ. NUMBER OF EXITS:	2
ACT. NUMBER OF EXITS:	2
REQ. EGRESS WIDTH:	222 OCC. * 0.2 / OCC. = 44"
ACT. EGRESS WIDTH:	126"



LIFE SAFETY SUMMARY (SEATING)

OCCUPANCY:	15 S.F. PER PERSON (GROSS)
ACTUAL OCCUPANCY:	1235 S.F. / 15 = 82 Occupants
REQ. NUMBER OF EXITS:	1
ACT. NUMBER OF EXITS:	1
REQ. EGRESS WIDTH:	0.2/OCC. = 16.5"
ACT. EGRESS WIDTH:	42"

BUILDING CODES ADOPTED

Building Code	2018 International Building Code (IBC)
Mechanical Code	2018 International Mechanical Code (IMC)
Plumbing Code	2018 International Plumbing Code (IPC)
Fuel Gas Code	2018 International Fuel Gas Code
Electrical Code	2017 National Electrical Code
Energy Code	2018 International Energy Conservation Code (IECC)

ALLOWABLE AREA
Equation 5-1 (506.2.2) - MIXED USE
Aa = At + (NS x If)

Aa = Allowable area
At= Tabular area factor (table 506.2)
NS= Tabular area factor for non sprinkler building (table 506.2)
If= area factor increase due to frontage percent per 506.3 (equation 5-5)
-Each story of mixed use occupancy building shall be calculated separately and individually comply with the allowable area based on the most restrictive occupancy per 508.3.2 and 503.1

FONTAGE INCREASE
Equation 5-5 (506.3)
If = (F/P - 0.25) W / 30

If= Area increase due to frontage
F= Building Perimeter on public way/ open space (min. 20 ft.)
P= Building Perimeter (total)
W= Width of public way / open space

MAINTENANCE/ POOL HOUSE

Construction Type	5A
Use Group	S-1, & B
Fire Protection	Fully-Sprinklered (NFPA 13R)
Accessibility	2010 ADA Guidelines & 2009 ICC/ANSI A117.1
Housing Act	Fair Housing Act

GENERAL BUILDING LIMITATIONS (Chapter 5 & 6)

Allowed Building Height (504.3 & 504.4) S-1: 3 / 50' Story / Feet

Allowed Building Height (504.3 & 504.4) B: 3 / 50' Story / Feet

Actual Building Height: 1 / 17' - 11" Story / Feet

ALLOWABLE AREA
Equation 5-1 (506.2.2)
Aa = At + (NS x If)

B
Tabular area factor: 18,000
NS area factor: 18,000

S-1
Tabular area factor: 14,000
NS area factor: 14,000

Equation 5-5 (506.3.3)
If = (F/P - 0.25) W / 30

F= 33 + 33
P= 222
W=30

If = (66 / 222 - 0.25) x 30 /30
If = (.30 - .25) x 1
If = .05

FLOOR AREA
Aa = [14,000 + (14,000 x .05)]
Aa = 14,700
S-1 Floor Total Actual Area: 1,443 SF

4 **MAINTENANCE / POOL HOUSE LIFE SAFETY PLAN**
SCALE: 1/8" = 1'-0"

ARCHITECT — TR¡ ARCHITECTS
STRUCTURAL ENGINEER — BOB D CAMPBELL & COMPANY
CIVIL ENGINEER — SM ENGINEERING
GENERAL CONTRACTOR — BRINKMANN CONSTRUCTORS
MECHANICAL ENGINEER — LATIMER SOMMERS & ASSOCIATES
PLUMBING ENGINEER — LATIMER SOMMERS & ASSOCIATES
ELECTRICAL ENGINEER — LATIMER SOMMERS & ASSOCIATES

Together Development

The Signature at West Pryor

2100 AND 2150 NW LOWENSTEIN DR.
LEE'S SUMMIT, MISSOURI 64081

TR¡ ARCHITECTS
TR¡ Architects
1700 S. Brentwood Blvd.
St. Louis, Missouri 63144
T: 314-395-9750
www.trlarchitects.com
© Copyright 2021

DATE: 7.15.2021

REVISIONS 6

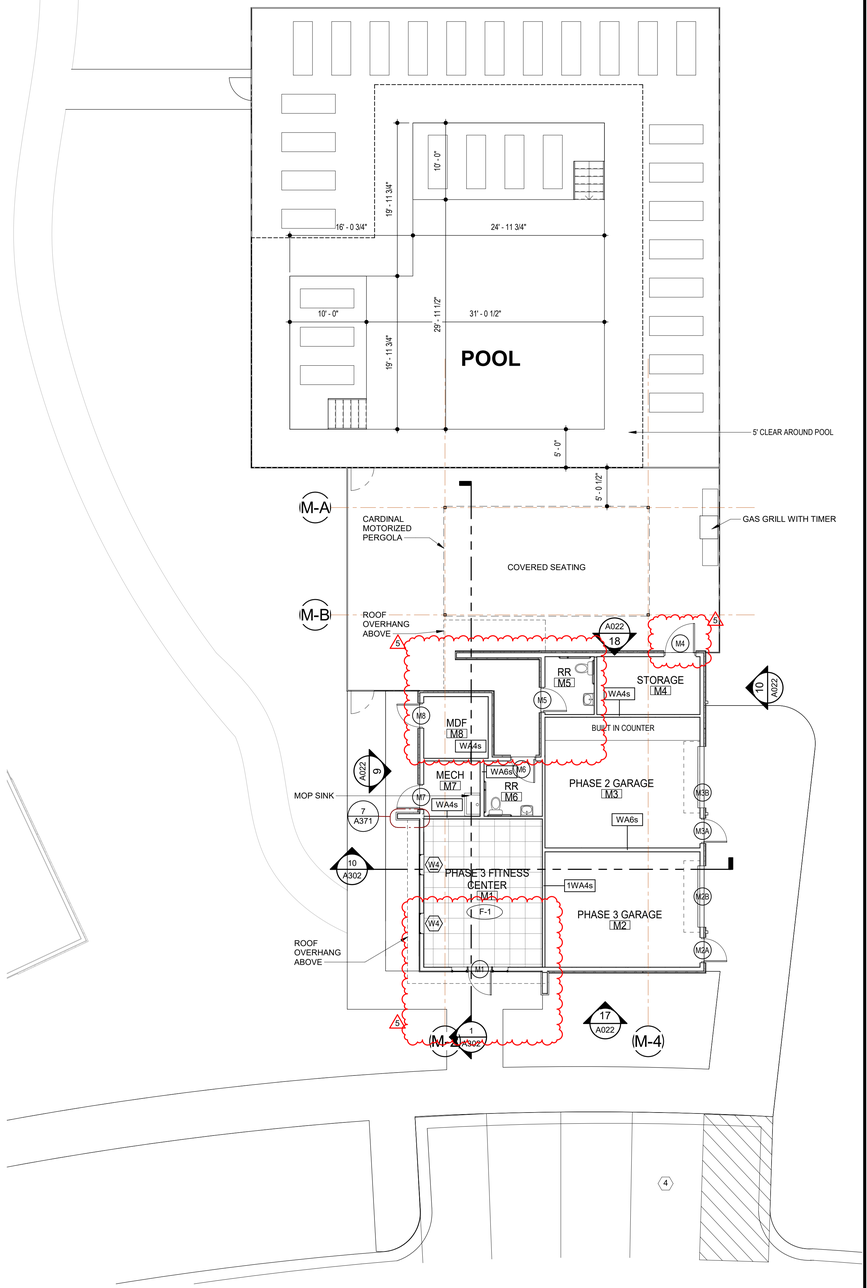
1	PERMIT COMMENTS	8.17.2021
3	Revision 1	2.11.2022
5	Revision 3	5.12.2022

DWG BY Author
TR¡ PROJECT NO. 20-001
SHEET NO. 1

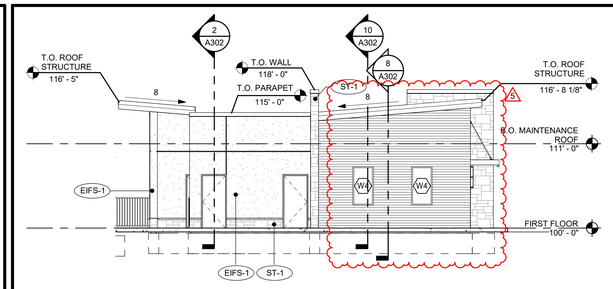
A018

MAINTENANCE / POOL HOUSE LIFE SAFETY PLAN

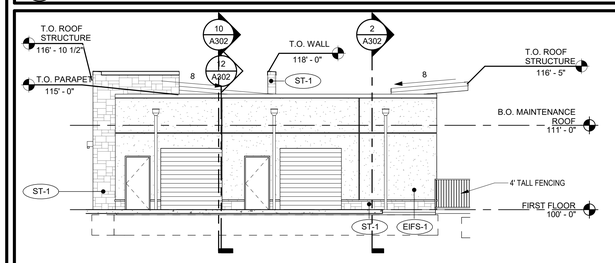
RELEASED FOR CONSTRUCTION
As Noted on Plans Review
Development Services Department
Lee's Summit, Missouri
05/23/2022



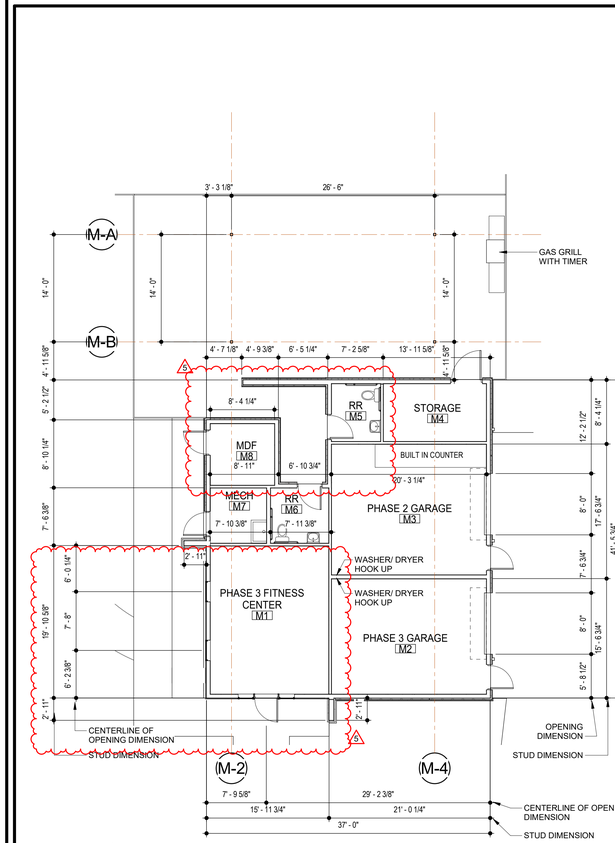
4 MAINTENANCE / POOL HOUSE SITE PLAN
SCALE: 1/8" = 1'-0"



9 WEST ELEVATION
SCALE: 1/8" = 1'-0"



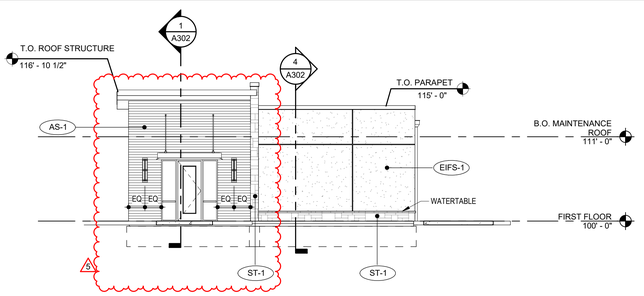
10 EAST ELEVATION
SCALE: 1/8" = 1'-0"



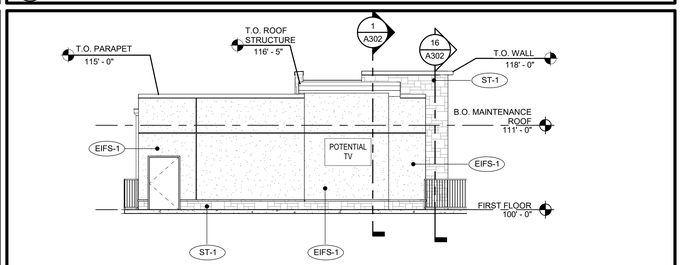
MAINTENANCE / POOL HOUSE ROOM FINISHES

ROOM NUMBER	NAME	CEILING FINISH	FLOOR FINISH	WALL FINISH	BASE FINISH
M1	PHASE 3 FITNESS CENTER	PT-2	F-1	PT-3	PT-2
M2	PHASE 3 GARAGE	PT-2	SEALED CONCRETE	PT-2 EPOXY	VB-1
M3	PHASE 2 GARAGE	PT-2	SEALED CONCRETE	PT-2 EPOXY	VB-1
M4	STORAGE	PT-2	SEALED CONCRETE	PT-2 EPOXY	VB-1
M5	RR	PT-2	SEALED CONCRETE	PT-2 EPOXY	VB-1
M6	RR	PT-2	SEALED CONCRETE	PT-2 EPOXY	VB-1
M7	MECH	PT-2	SEALED CONCRETE	PT-2 EPOXY	VB-1
M8	MDF	PT-2	SEALED CONCRETE	PT-2 EPOXY	VB-1

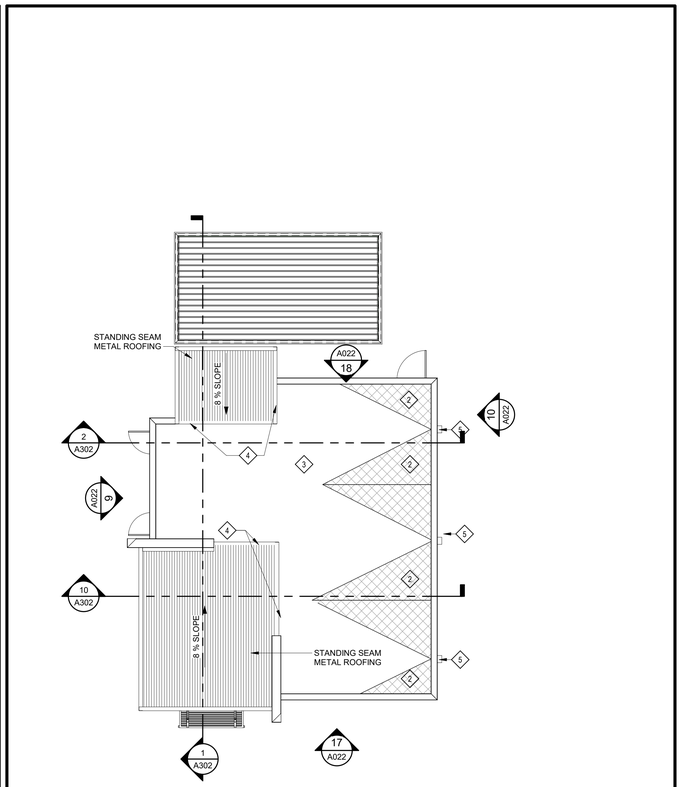
12 MAINTENANCE / POOL HOUSE PLAN
SCALE: 1/8" = 1'-0"



17 SOUTH ELEVATION
SCALE: 1/8" = 1'-0"



18 NORTH ELEVATION
SCALE: 1/8" = 1'-0"



20 MAINTENANCE / POOL HOUSE ROOF PLAN
SCALE: 1/8" = 1'-0"

DOWNSPOUT CALCS

1,792 S.F. / 3 DOWNSPOUTS = 597 S.F./D.S.
(SMACNA) TABLE 1-2 - 100 YEAR S.F./S.I. = 120
597 /120 = 4.975 SQUARE INCHES OF DOWNSPOUT AREA
USE (3) 4" SQ. DOWNSPOUTS

ROOF KEYED NOTES #9

1. PROVIDE TAPERED CRICKETS AT ALL ROOF TOP UNITS, SLOPE 1/2" PER FOOT MINIMUM. INSTALL FLASHING AND COUNTER FLASHING PER ROOFING MANUFACTURER'S WRITTEN RECOMMENDATIONS.
2. TAPERED CRICKETS AS REQUIRED. SLOPE 1/2" PER FOOT MINIMUM.
3. FULLY ADHERED T.P.O. ROOF MEMBRANE.
4. CHANGE IN ROOF SLOPE AND/OR ELEVATION.
5. THRU-WALL ROOF SCUPPER WITH OVERFLOW.

TR¡ ARCHITECTS — ARCHITECT
BOB D CAMPBELL & COMPANY — STRUCTURAL ENGINEER
SM ENGINEERING — CIVIL ENGINEER
BRINKMANN CONSTRUCTORS — GENERAL CONTRACTOR
LATIMER SOMMERS & ASSOCIATES — MECHANICAL ENGINEER
LATIMER SOMMERS & ASSOCIATES — PLUMBING ENGINEER
LATIMER SOMMERS & ASSOCIATES — ELECTRICAL ENGINEER

TegetHoff DEVELOPMENT

The Signature at West Pryor

2100 AND 2150 NW LOWENSTEIN DR.
LEE'S SUMMIT, MISSOURI 64081

TR¡ ARCHITECTS

TR¡ Architects
1790 S. Brentwood Blvd.
St. Louis, Missouri 63144
T: 314-395-9750
www.triarchitects.com
© Copyright 2021

DATE: 7.15.2021

REVISIONS #

1	PERMIT COMMENTS	8.17.2021
5	Revision 3	5.12.2022

DWG BY MKSS

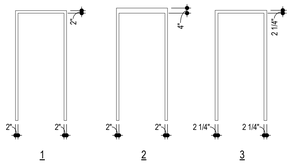
TR¡ PROJECT NO. 20-001

SHEET NO.

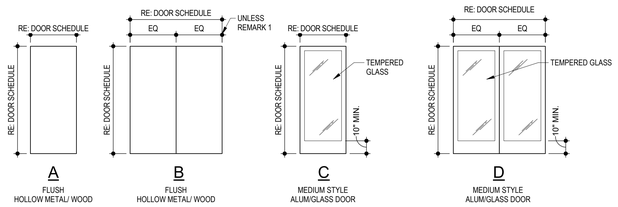
A022

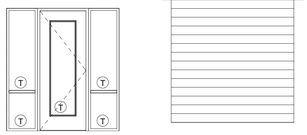
MAINTENANCE SHED / POOL HOUSE

DOOR FRAME TYPES



DOOR TYPES





E
WOOD DOOR WITH SIDELIGHTS, EXTERIOR CLAD IN ALUMINUM



F
OVERHEAD COILING DOOR

DOOR SCHEDULE REMARKS

1. (1) 3'-0" AND (1) 2'-4" DOOR.
2. CREATE DOOR ALCOVE. RE: A042
3. DOOR TO HAVE ACCESS CONTROL, G.C. TO COORD. W/ OWNER'S VENDOR.
4. DOOR TO BE SMOKE AND DRAFT CONTROL RATED.

MAINTENANCE SHED DOOR SCHEDULE

MAINTENANCE SHED DOOR SCHEDULE

DOORS									FRAMES					
NO.	TYPE	MAT'L.	WIDTH	HEIGHT	THICKNESS	HW SET	LABEL	REMARKS	TYPE	MAT'L.	HEAD	JAMBS	SILL	LABEL
M1	E	WD	3' - 0"	7' - 10"	0' - 1 3/4"	8.0	-	PELLA DOOR IN SPEC	-	WD	1/A042 SIM	2/A042 SIM		17/A041	-
M2A	A	HM	3' - 0"	7' - 0"	0' - 1 3/4"	8.0	-		1	HM	1/A041	10/A041		17/A041	-
M2B	F	STL	8' - 0"	8' - 0"	0' - 2"	9.0	-	-	-	STL	5/A042	6/A042			-
M3A	A	HM	3' - 0"	7' - 0"	0' - 1 3/4"	8.0	-		1	HM	1/A041	10/A041		17/A041	-
M3B	F	STL	8' - 0"	8' - 0"	0' - 2"	9.0	-	-	-	STL	5/A042	6/A042			-
M4	202	HM	3' - 10"	7' - 0"	0' - 2"	23.0	-		1	HM	1/A041	10/A041		17/A041	-
M5	A	HM	3' - 0"	7' - 0"	0' - 1 3/4"	22.0	-		1	HM	1/A041	10/A041		17/A041	-
M6	A	HM	3' - 0"	7' - 0"	0' - 1 3/4"	22.0	-		1	HM	1/A041	10/A041		17/A041	-
M7	A	HM	3' - 0"	7' - 0"	0' - 1 3/4"	6.0	-		1	HM	1/A041	10/A041		17/A041	-
M8	A	HM	3' - 0"	7' - 0"	0' - 1 3/4"	6.0	-		1	HM	1/A041	10/A041		17/A041	-

BUILDING 1 DOOR SCHEDULES

DOOR SCHEDULE BLDG 1 - FIRST FLOOR

DOORS									FRAMES					
NO.	TYPE	MAT'L.	WIDTH	HEIGHT	THICKNESS	HW SET	LABEL	REMARKS	TYPE	MAT'L.	HEAD	JAMBS	SILL	LABEL
101A	C	AL/GL	3' - 0"	8' - 0"		4.0			-	AL	MANF	MANF	17/A041	
101B	A	WD	3' - 0"	7' - 0"	0' - 1 3/4"	17.0	60 MIN		1	HM	9/A041	9/A041	17/A041	60 MIN
103	A	HM	3' - 0"	7' - 0"	0' - 1 3/4"	15.0	20 MIN		1	HM	9/A041	9/A041	17/A041	20 MIN
103a	A	HM	3' - 0"	7' - 0"	0' - 1 3/4"	15.0	20 MIN		1	HM	9/A041	9/A041	17/A041	20 MIN
104	A	HM	3' - 0"	7' - 0"	0' - 1 3/4"	15.0	20 MIN		1	HM	9/A041	9/A041	17/A041	20 MIN
105	A	HM	3' - 0"	7' - 0"	0' - 1 3/4"	24.0	20 MIN		1	HM	9/A041	9/A041	17/A041	20 MIN
106	A	WD	3' - 0"	7' - 0"	0' - 1 3/4"	24.0	20 MIN		1	HM	9/A041	9/A041	17/A041	20 MIN
107	A	HM	3' - 0"	7' - 0"	0' - 1 3/4"	24.0	20 MIN		1	HM	9/A041	9/A041	17/A041	20 MIN
108A	C	AL/GL	3' - 0"	8' - 0"		4.0			-	AL	MANF	MANF	17/A041	
108B	A	WD	3' - 0"	7' - 0"	0' - 1 3/4"	17.0	60 MIN		1	HM	9/A041	9/A041	17/A041	60 MIN
109	C	AL/GL	3' - 0"	8' - 0"		4.0			-	AL	MANF	MANF	17/A041	
109B	B	WD	6' - 0"	7' - 0"	0' - 1 3/4"	26.0	90 MIN		1	HM	9/A041	9/A041	17/A041	90 MIN
110A	C	WD	3' - 0"	7' - 0"	0' - 1 3/4"	17.0	20 MIN		1	HM	9/A041	9/A041	17/A041	20 MIN
110B	C	WD	3' - 0"	7' - 0"	0' - 1 3/4"	17.0	20 MIN		1	HM	9/A041	9/A041	17/A041	20 MIN
111	B	WD	5' - 4"	7' - 0"	0' - 1 3/4"	20.0	90 MIN	1	1	HM	9/A041	9/A041	17/A041	90 MIN
112	A	HM	3' - 0"	7' - 0"	0' - 1 3/4"	24.0	20 MIN		1	HM	9/A041	9/A041	17/A041	20 MIN
113	A	HM	3' - 0"	7' - 0"	0' - 1 3/4"	24.0	20 MIN		1	HM	9/A041	9/A041	17/A041	20 MIN
114	A	HM	3' - 0"	7' - 0"	0' - 1 3/4"	24.0	20 MIN		1	HM	9/A041	9/A041	17/A041	20 MIN
115	B	WD	6' - 0"	7' - 0"	0' - 1 3/4"	26.0	90 MIN		1	HM	9/A041	9/A041	17/A041	90 MIN
116	A	HM	3' - 0"	7' - 0"	0' - 1 3/4"	6.0			2	HM	1/A041	10/A041	17/A041	
116A	D	AL/GL	6' - 0"	8' - 0"		2.0			-	AL	MANF	MANF	17/A041	
116B	D	AL/GL	6' - 0"	8' - 0"	3	11.0			-	AL	MANF	MANF	17/A041	
117A	A	HM	3' - 0"	7' - 0"	0' - 1 3/4"	1.0			2	HM	1/A042	2/A042	17/A041	
117B	A	WD	3' - 0"	7' - 0"	0' - 1 3/4"	21.0	60 MIN		1	HM	9/A041	9/A041	17/A041	60 MIN
118A	D	AL/GL	6' - 0"	8' - 0"		2.0			-	AL	MANF	MANF	17/A041	
118B	D	AL/GL	6' - 0"	8' - 0"	3	11.0			-	AL	MANF	MANF	17/A041	
121	A	HM	3' - 0"	7' - 0"	0' - 1 3/4"	24.0	20 MIN		1	HM	9/A041	9/A041	17/A041	20 MIN
122	A	HM	3' - 0"	7' - 0"	0' - 1 3/4"	24.0	20 MIN		1	HM	9/A041	9/A041	17/A041	20 MIN
123	A	HM	3' - 0"	7' - 0"	0' - 1 3/4"	24.0	20 MIN		1	HM	9/A041	9/A041	17/A041	20 MIN
124A	C	AL/GL	3' - 0"	8' - 0"		5.0			-	AL	MANF	MANF	17/A041	
124B	C	AL/GL	3' - 0"	8' - 0"		12.0			-	AL	MANF	MANF	17/A041	
125A	C	AL/GL	3' - 0"	8' - 0"		5.0			-	AL	MANF	MANF	17/A041	
125B	C	AL/GL	3' - 0"	8' - 0"		12.0			-	AL	MANF	MANF	17/A041	
126A	A	HM	3' - 0"	7' - 0"	0' - 1 3/4"	1.0			2	HM	2/A041	6/A041	17/A041	
126B	A	WD	3' - 0"	7' - 0"	0' - 1 3/4"	21.0	60 MIN		1	HM	9/A041	9/A041	17/A041	60 MIN
150	D	AL/GL	6' - 0"	7' - 0"		3.0			-	AL	MANF	MANF	17/A041	
150B	D	AL/GL	6' - 0"	7' - 0"		10.0			-	AL	MANF	MANF	17/A041	
151	D	AL/GL	6' - 0"	7' - 0"		13.0	20 MIN	3	-	AL	MANF	MANF	17/A041	20 MIN 4
152	C	AL/GL	3' - 0"	7' - 0"		14.0			-	AL	MANF	MANF	17/A041	
153	D	AL/GL	6' - 0"	7' - 0"		13.0			-	AL	MANF	MANF	17/A041	
154	C	WD	3' - 0"	7' - 0"	0' - 1 3/4"	21.0			1	HM	9/A041	9/A041	17/A041	
155	C	WD	3' - 0"	7' - 0"	0' - 1 3/4"	21.0			1	HM	9/A041	9/A041	17/A041	
156	C	WD	3' - 0"	7' - 0"	0' - 1 3/4"	21.0			1	HM	9/A041	9/A041	17/A041	
157	C	AL/GL	3' - 0"	8' - 0"		2.0		EXIT ONLY 5	-	AL	MANF	MANF	17/A041	
158	C	WD	3' - 0"	7' - 0"	0' - 1 3/4"	15.0			1	HM	9/A041	9/A041	17/A041	
159	A	WD	3' - 0"	7' - 0"	0' - 1 3/4"	15.0			1	HM	9/A041	9/A041	17/A041	
160	C	AL/GL	3' - 0"	7' - 0"		16.0			-	AL	MANF	MANF	17/A041	
161	C	AL/GL	3' - 0"	7' - 0"		16.0			-	AL	MANF	MANF	17/A041	
162	D	WD	6' - 0"	7' - 0"	0' - 1 3/4"	19.0	20 MIN		1	HM	9/A041	9/A041	17/A041	20 MIN
163	A	WD	3' - 0"	7' - 0"	0' - 1 3/4"	24.0			1	HM	9/A041	9/A041	17/A041	
164	C	AL/GL	3' - 0"	7' - 0"		14.0			-	AL	MANF	MANF	17/A041	
165	A	WD	3' - 0"	7' - 0"	0' - 1 3/4"	22.0	20 MIN		1	HM	9/A041	9/A041	17/A041	20 MIN
166	A	WD	3' - 0"	7' - 0"	0' - 1 3/4"	22.0	20 MIN		1	HM	9/A041	9/A041	17/A041	20 MIN
167	A	WD	3' - 0"	7' - 0"	0' - 1 3/4"	22.0	20 MIN		1	HM	9/A041	9/A041	17/A041	20 MIN
168	A	WD	3' - 0"	7' - 0"	0' - 1 3/4"	22.0	20 MIN		1	HM	9/A041	9/A041	17/A041	20 MIN

DOOR SCHEDULE BLDG 1 - SECOND FLOOR

DOORS									FRAMES					
NO.	TYPE	MAT'L.	WIDTH	HEIGHT	THICKNESS	HW SET	LABEL	REMARKS	TYPE	MAT'L.	HEAD	JAMBS	SILL	LABEL
201	A	WD	3' - 0"	7' - 0"	0' - 1 3/4"	17.0	60 MIN		1	HM	9/A041	9/A041	17/A041	60 MIN
203	A	HM	3' - 0"	7' - 0"	0' - 1 3/4"	15.0	20 MIN		1	HM	9/A041	9/A041	17/A041	20 MIN
203a	A	HM	3' - 0"	7' - 0"	0' - 1 3/4"	15.0	20 MIN		1	HM	9/A041	9/A041	17/A041	20 MIN
204	A	HM	3' - 0"	7' - 0"	0' - 1 3/4"	15.0	20 MIN		1	HM	9/A041	9/A041	17/A041	20 MIN
205	A	HM	3' - 0"	7' - 0"	0' - 1 3/4"	15.0	20 MIN		1	HM	9/A041	9/A041	17/A041	20 MIN
206	A	WD	3' - 0"	7' - 0"	0' - 1 3/4"	15.0	20 MIN		1	HM	9/A041	9/A041	17/A041	20 MIN
207	A	HM	3' - 0"	7' - 0"	0' - 1 3/4"	24.0	20 MIN		1	HM	9/A041	9/A041	17/A041	20 MIN
208	A	WD	3' - 0"	7' - 0"	0' - 1 3/4"	17.0	60 MIN		1	HM	9/A041	9/A041	17/A041	60 MIN
209	A	WD	3' - 0"	7' - 0"	0' - 1 3/4"	24.0	20 MIN		1	HM	9/A041	9/A041	17/A041	20 MIN
210	B	WD	6' - 0"	7' - 0"	0' - 1 3/4"	26.0	90 MIN		1	HM	9/A041	9/A041	17/A041	90 MIN
211	B	WD	5' - 4"	7' - 0"	0' - 1 3/4"	20.0	90 MIN	1	1	HM	9/A041	9/A041	17/A041	90 MIN
215	B	WD	6' - 0"	7' - 0"	0' - 1 3/4"	26.0	90 MIN		1	HM	9/A041	9/A041	17/A041	90 MIN
217	A	WD	3' - 0"	7' - 0"	0' - 1 3/4"	17.0	60 MIN		1	HM	9/A041	9/A041	17/A041	60 MIN
218	A	HM	3' - 0"	7' - 0"	0' - 1 3/4"	24.0	20 MIN		1	HM	9/A041	9/A041	17/A041	20 MIN
221	A	HM	3' - 0"	7' - 0"	0' - 1 3/4"	24.0	20 MIN		1	HM	9/A041	9/A041	17/A041	20 MIN
222	A	HM	3' - 0"	7' - 0"	0' - 1 3/4"	15.0	20 MIN		1	HM	9/A041	9/A041	17/A041	20 MIN
223	A	HM	3' - 0"	7' - 0"	0' - 1 3/4"	15.0	20 MIN		1	HM	9/A041	9/A041	17/A041	20 MIN
224	A	HM	3' - 0"	7' - 0"	0' - 1 3/4"	24.0	20 MIN		1	HM	9/A041	9/A041	17/A041	20 MIN
226	A	WD	3' - 0"	7' - 0"	0' - 1 3/4"	17.0	60 MIN		1	HM	9/A041	9/A041	17/A041	60 MIN
230	A	WD	3' - 0"	7' - 0"	0' - 1 3/4"	25.0	20 MIN		1	HM	9/A041	9/A041	17/A041	20 MIN
231	A	WD	3' - 0"	7' - 0"	0' - 1 3/4"	15.0	20 MIN		1	HM	9/A041	9/A041	17/A041	20 MIN
232	A	WD	3' - 0"	7' - 0"	0' - 1 3/4"	15.0	20 MIN		1	HM	9/A041	9/A041	17/A041	20 MIN
233	A	WD	3' - 0"	7' - 0"	0' - 1 3/4"	15.0	20 MIN		1	HM	9/A041	9/A041	17/A041	20 MIN
234	A	WD	3' - 0"	7' - 0"	0' - 1 3/4"	15.0	20 MIN		1	HM	9/A041	9/A041	17/A041	20 MIN
235	A	WD	3' - 0"	7' - 0"	0' - 1 3/4"	15.0	20 MIN		1	HM	9/A041	9/A041	17/A041	20 MIN
236	A	WD	3' - 0"	7' - 0"	0' - 1 3/4"	15.0	20 MIN		1	HM	9/A041	9/A041	17/A041	20 MIN
237	A	WD	3' - 0"	7' - 0"	0' - 1 3/4"	15.0	20 MIN		1	HM	9/A041	9/A041	17/A041	20 MIN
238	A	WD	3' - 0"	7' - 0"	0' - 1 3/4"	15.0	20 MIN		1	HM	9/A041	9/A041	17/A041	20 MIN
239	A	WD	3' - 0"	7' - 0"	0' - 1 3/4"	15.0	20 MIN		1	HM	9/A041	9/A041	17/A041	20 MIN
240	A	WD	3' - 0"	7' - 0"	0' - 1 3/4"	24.0	20 MIN		1	HM	9/A041	9/A041	17/A041	20 MIN

DOOR SCHEDULE BLDG 1 - THIRD FLOOR

DOORS									FRAMES					
NO.	TYPE	MAT'L.	WIDTH	HEIGHT	THICKNESS	HW SET	LABEL	REMARKS	TYPE	MAT'L.	HEAD	JAMBS	SILL	LABEL
301	A	WD	3' - 0"	7' - 0"	0' - 1 3/4"	17.0	60 MIN		1	HM	9/A041	9/A041	17/A041	60 MIN
303	A	HM	3' - 0"	7' - 0"	0' - 1 3/4"	15.0	20 MIN		1	HM	9/A041	9/A041	17/A041	20 MIN
303a	A	HM	3' - 0"	7' - 0"	0' - 1 3/4"	15.0	20 MIN		1	HM	9/A041	9/A041	17/A041	20 MIN
304	A	HM	3' - 0"	7' - 0"	0' - 1 3/4"	15.0	20 MIN		1	HM	9/A041	9/A041	17/A041	20 MIN
305	A	HM	3' - 0"	7' - 0"	0' - 1 3/4"	15.0	20 MIN		1	HM	9/A041	9/A041	17/A041	20 MIN
306	A	WD	3' - 0"	7' - 0"	0' - 1 3/4"	24.0	20 MIN		1	HM	9/A041	9/A041	17/A041	20 MIN
307	A	HM	3' - 0"	7' - 0"	0' - 1 3/4"	24.0	20 MIN		1	HM	9/A041	9/A041	17/A041	20 MIN
308	A	WD	3' - 0"	7' - 0"	0' - 1 3/4"	17.0	60 MIN		1	HM	9/A041	9/A041	17/A041	60 MIN
309	A	WD	3' - 0"	7' - 0"	0' - 1 3/4"	24.0	20 MIN		1	HM	9/A041	9/A041	17/A041	20 MIN
310	B	WD	6' - 0"	7' - 0"	0' - 1 3/4"	26.0	90 MIN		1	HM	9/A041	9/A041	17/A041	90 MIN
311	B	WD	5' - 4"	7' - 0"	0' - 1 3/4"	20.0	90 MIN	1	1	HM	9/A041	9/A041	17/A041	90 MIN
315	B	WD	6' - 0"	7' - 0"	0' - 1 3/4"	26.0	90 MIN		1	HM	9/A041	9/A041	17/A041	90 MIN
317	A	WD	3' - 0"	7' - 0"	0' - 1 3/4"	17.0	60 MIN		1	HM	9/A041	9/A041	17/A041	60 MIN
318	A	HM	3' - 0"	7' - 0"	0' - 1 3/4"	24.0	20 MIN		1	HM	9/A041	9/A041	17/A041	20 MIN
321	A	HM	3' - 0"	7' - 0"	0' - 1 3/4"	24.0	20 MIN		1	HM	9/A041	9/A041	17/A041	20 MIN
322	A	HM	3' - 0"	7' - 0"	0' - 1 3/4"	24.0	20 MIN		1	HM	9/A041	9/A041	17/A041	20 MIN
323	A	HM	3' - 0"	7' - 0"	0' - 1 3/4"	15.0	20 MIN		1	HM	9/A041	9/A041	17/A041	20 MIN
324	A	HM	3' - 0"	7' - 0"	0' - 1 3/4"	15.0	20 MIN		1	HM	9/A041	9/A041	17/A041	20 MIN
325	A	HM	3' - 0"	7' - 0"	0' - 1 3/4"	24.0	20 MIN		1	HM	9/A041	9/A041	17/A041	20 MIN
326	A	WD	3' - 0"	7' - 0"	0' - 1 3/4"	17.0	60 MIN		1	HM	9/A041	9/A041	17/A041	60 MIN
330	A	WD	3' - 0"	7' - 0"	0' - 1 3/4"	15.0	20 MIN		1	HM	9/A041	9/A041	17/A041	20 MIN
331	A	WD	3' - 0"	7' - 0"	0' - 1 3/4"	15.0	20 MIN		1	HM	9/A041	9/A041	17/A041	20 MIN
332	A	WD	3' - 0"	7' - 0"	0' - 1 3/4"	15.0	20 MIN		1	HM	9/A041	9/A041	17/A041	20 MIN
333	A	WD	3' - 0"	7' - 0"	0' - 1 3/4"	15.0	20 MIN		1	HM	9/A041	9/A041	17/A041	20 MIN
334	A	WD	3' - 0"	7' - 0"	0' - 1 3/4"	15.0	20 MIN		1	HM	9/A041	9/A041	17/A041	20 MIN
335	A	WD	3' - 0"	7' - 0"	0' - 1 3/4"	15.0	20 MIN		1	HM	9/A041	9/A041	17/A041	20 MIN
336	A	WD	3' - 0"	7' - 0"	0' - 1 3/4"	15.0	20 MIN		1	HM	9/A041	9/A041	17/A041	20 MIN
337	A	WD	3' - 0"	7' - 0"	0' - 1 3/4"	15.0	20 MIN		1	HM	9/A041	9/A041	17/A041	20 MIN
338	A	WD	3' - 0"	7' - 0"	0' - 1 3/4"	24.0	20 MIN		1	HM	9/A041	9/A041	17/A041	20 MIN

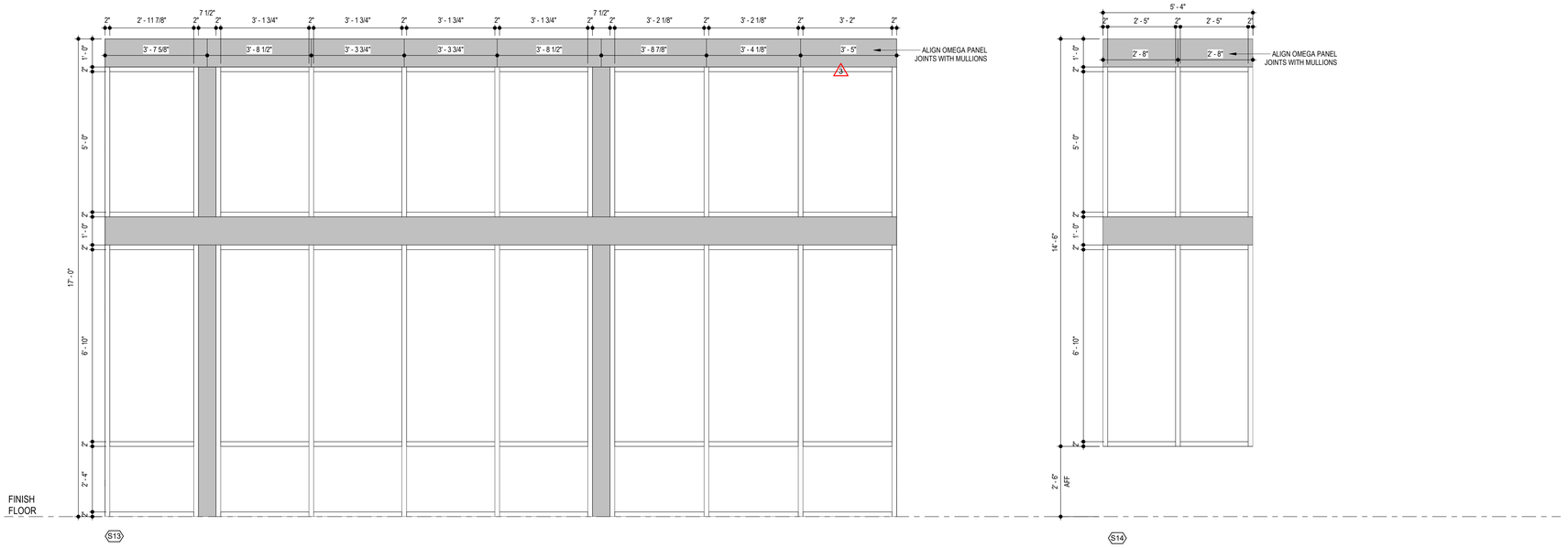
BUILDING 2 DOOR SCHEDULES

DOOR SCHEDULE BLDG 2 - FIRST FLOOR

DOORS									FRAMES					
NO.	TYPE	MAT'L.	WIDTH	HEIGHT	THICKNESS	HW SET	LABEL	REMARKS	TYPE	MAT'L.	HEAD	JAMBS	SILL	LABEL
100A	C	AL/GL	3' - 0"	8' - 0"		4.0			-	AL	MANF	MANF	17/A041	
100B	A	WD	3' - 0"	7' - 0"	0' - 1 3/4"	17.0	60 MIN		1	HM	9/A041	9/A041	17/A041	60 MIN
101	C	AL/GL	3' - 0"	8' - 0"		5.0			-	AL	MANF	MANF	17/A041	
102	A	WD	3' - 0"	7' - 0"	0' - 1 3/4"	24.0	20 MIN		1	HM	9/A041	9/A041	17/A041	20 MIN
103	A	WD	3' - 0"	7' - 0"	0' - 1 3/4"	24.0	20 MIN		1	HM	9/A041	9/A041	17/A041	20 MIN
104	A	WD	3' - 0"	7' - 0"	0' - 1 3/4"	15.0	20 MIN		1	HM	9/A041	9/A041	17/A041	20 MIN
105	A	WD	3' - 0"	7' - 0"	0' - 1 3/4"	24.0	20 MIN		1	HM	9/A041	9/A041	17/A041	20 MIN
106	A	WD	3' - 0"	7' - 0"	0' - 1 3/4"	22.0	20 MIN		1	HM	9/A041	9/A041	17/A041	20 MIN
107	A	HM	3' - 0"	7' - 0"	0' - 1 3/4"	22.0	20 MIN		1	HM	9/A041	9/A041	17/A041	20 MIN
108	B	WD	6' - 0"	7' - 0"	0' - 1 3/4"	26.0	90 MIN		1	HM	9/A041	9/A041	17/A041	90 MIN
109A	A	HM	3' - 0"	7' - 0"	0' - 1 3/4"	24.0	20 MIN		1	HM	9/A041	9/A041	17/A041	20 MIN
109B	A	HM	3' - 0"	7' - 0"	0' - 1 3/4"	24.0	20 MIN		1	HM	9/A041	9/A041	17/A041	20 MIN
110A	A	WD	3' - 0"	7' - 0"	0' - 1 3/4"	1.0			2	HM	2/A041	6/A041	17/A041	
110B	A	WD	3' - 0"	7' - 0"	0' - 1 3/4"	17.0	60 MIN		1	HM	9/A041	9/A041	17/A041	60 MIN
111	B	WD	6' - 0"	7' - 0"	0' - 1 3/4"	26.0	90 MIN		1	HM	9/A041	9/A041	17/A041	90 MIN
111B	D	AL/GL	6' - 0"	8' - 0"		2.0			-	AL	MANF	MANF	17/A041	
112A	D	AL/GL	6' - 0"	8' - 0"		2.0			-	AL	MANF	MANF	17/A041	
112B	A	WD	3' - 0"	7' - 0"	0' - 1 3/4"	17.0	60 MIN		1	HM	9/A041	9/A041	17/A041	60 MIN
114A	D	AL/GL	6' - 0"	7' - 0"		7.0			-	AL	MANF	MANF	17/A041	
114B	C	AL/GL	3' - 0"	7' - 0"		2.0			-	AL	MANF	MANF	17/A041	
115	A	HM	3' - 0"	7' - 0"	0' - 1 3/4"	24.0	20 MIN		1	HM	9/A041	9/A041	17/A041	20 MIN
116	A	WD	3' - 0"	7' - 0"	0' - 1 3/4"	24.0	20 MIN		1	HM	9/A041	9/A041	17/A041	20 MIN
117	A	WD	3' - 0"	7' - 0"	0' - 1 3/4"	15.0	20 MIN		1	HM	9/A041	9/A041	17/A041	20 MIN
118	A	WD	3' - 0"	7' - 0"	0' - 1 3/4"	15.0	20 MIN		1	HM	9/A041	9/A041	17/A041	20 MIN
119	A	HM	3' - 0"	7' - 0"	0' - 1 3/4"	15.0	20 MIN		1	HM	9/A041	9/A041	17/A041	20 MIN
120	A	HM	3' - 0"	7' - 0"	0' - 1 3/4"	15.0	20 MIN		1	HM	9/A041	9/A041	17/A041	20 MIN
121	A	HM	3' - 0"	7' - 0"	0' - 1 3/4"	15.0	20 MIN		1	HM	9/A041	9/A041	17/A041	20 MIN
122	A	HM	3' - 0"	7' - 0"	0' - 1 3/4"	15.0	20 MIN		1	HM	9/A041	9/A041	17/A041	20 MIN
123	A	HM	3' - 0"	7' - 0"	0' - 1 3/4"	15.0	20 MIN		1	HM	9/A041	9/A041	17/A041	20 MIN
124	A	HM	3' - 0"	7' - 0"	0' - 1 3/4"	15.0	20 MIN		1	HM	9/A041	9/A041	17/A041	20 MIN
125	A	WD	3' - 0"	7' - 0"	0' - 1 3/4"	18.0	60 MIN		1	HM	9/A041	9/A041	17/A041	60 MIN
126	A	WD	3' - 0"	7' - 0"	0' - 1 3/4"	6.0			2	HM	1/A041	10/A041	17/A041	
150	D	AL/GL	6' - 0"	7' - 0"		3.0			-	AL	MANF	MANF	17/A041	
151	D	AL/GL	6' - 0"	7' - 0"		10.0			-	AL	MANF	MANF	17/A041	
152	D	AL/GL	6' - 0"	7' - 0"		13.0	20 MIN	3	-	AL	MANF	MANF	17/A041	20 MIN 3
153	C	WD	3' - 0"	7' - 0"	0' - 1 3/4"	21.0	20 MIN		1	HM	9/A041	9/A041	17/A041	20 MIN
154	C	WD	3' - 0"	7' - 0"	0' - 1 3/4"	15.0			1	HM	9/A041	9/A041	17/A041	
155	C	WD	3' - 0"	7' - 0"	0' - 1 3/4"	21.0			1	HM	9/A041	9/A041	17/A041	
156	C	WD	3' - 0"	7' - 0"	0' - 1 3/4"	21.0			1	HM	9/A041	9/A041	17/A041	
157	C	WD	3' - 0"	7' - 0"	0' - 1 3/4"	21.0			1	HM	9/A041	9/A041	17/A041	
159A	C	AL/GL	3' - 0"	7' - 0"		16.0			-	AL	MANF	MANF	17/A041	20 MIN
159B	C	AL/GL	3' - 0"	7' - 0"		16.0	20 MIN		-	AL	MANF	MANF	17/A041	20 MIN
160	C	AL/GL	3' - 0"	7' - 0"		16.0	20 MIN		-	AL	MANF	MANF	17/A041	20 MIN

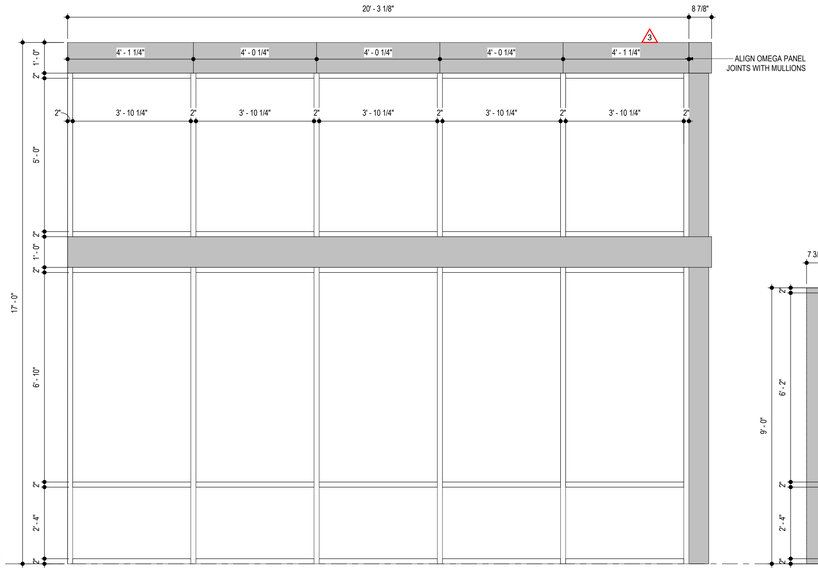
DOOR SCHEDULE BLDG 2 - SECOND FLOOR

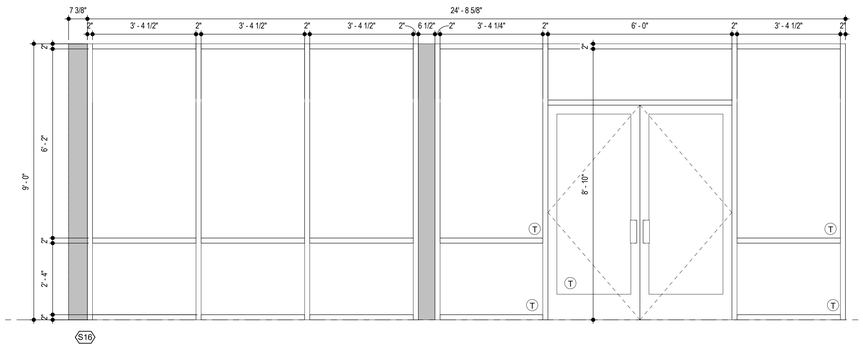
DOORS									FRAMES					
NO.	TYPE	MAT'L.	WIDTH	HEIGHT	THICKNESS	HW SET	LABEL	REMARKS	TYPE	MAT'L.	HEAD	JAMBS	SILL	LABEL
200	A	WD	3' - 0"	7' - 0"	0' - 1 3/4"	17.0	60 MIN		1	HM	9/A041	9/A041	17/A041	60 MIN
201	A	HM	3' - 0"	7' - 0"	0' - 1 3/4"	24.0	20 MIN		1	HM	9/A041	9/A041	17/A041	20 MIN
202	A	WD	3' - 0"	7' - 0"	0' - 1 3/4"	15.0	20 MIN		1	HM	9/A041	9/A041	17/A041	20 MIN
203	A	WD	3' - 0"	7' - 0"	0' - 1 3/4"	15.0	20 MIN		1	HM	9/A041	9/A041	17/A041	20 MIN
204	A	WD	3' - 0"	7' - 0"	0' - 1 3/4"	15.0	20 MIN		1	HM	9/A041	9/A041	17/A041	20 MIN
205	A	WD	3' - 0"	7' - 0"	0' - 1 3/4"	15.0	20 MIN		1	HM	9/A041	9/A041	17/A041	20 MIN
206	A	WD	3' - 0"	7' - 0"	0' - 1 3/4"	15.0	20 MIN		1	HM	9/A041	9/A041	17/A041	20 MIN
207	A	WD	3' - 0"	7' - 0"	0' - 1 3/4"

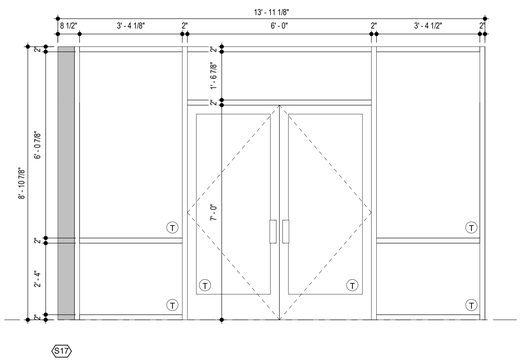


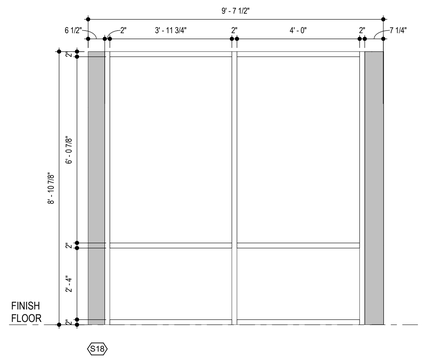
STOREFRONT SCHEDULE					
TYPE	BUILDING	LOCATION	HEIGHT	LENGTH	COMMENTS
S1	BLDG 1	AMENITY ENTRY	17' - 0"	24' - 2 5/8"	
S2	BLDG 1	AMENITY VESTIBULE	16' - 0"	13' - 1 1/8"	
S3	BLDG 1	AMENITY VESTIBULE	16' - 0"	8' - 5 5/8"	
S4	BLDG 1	MEETING ROOM	14' - 6"	2' - 8"	
S5	BLDG 1	MEETING ROOM	17' - 0"	3' - 5 1/2"	
S6	BLDG 1	ENTRY CORRIDOR	8' - 2"	6' - 4"	
S7	BLDG 1	ENTRY CORRIDOR	8' - 2"	6' - 10"	
S8	BLDG 1	ENTRY CORRIDOR	8' - 2"	7' - 1 7/8"	
S9	BLDG 1	ENTRY CORRIDOR	8' - 2"	6' - 9"	
S10	BLDG 1	ENTRY CORRIDOR	8' - 2"	7' - 4 7/8"	
S11	BLDG 1	ENTRY CORRIDOR	8' - 2"	6' - 5"	
S12	BLDG 1	ENTRY CORRIDOR	8' - 2"	6' - 7 1/2"	
S13	BLDG 1	FITNESS	17' - 0"	28' - 2"	
S14	BLDG 1	FITNESS	14' - 6"	5' - 4"	
S15	BLDG 1	AMENITY LOBBY	17' - 0"	20' - 3 1/8"	
S30	BLDG 1	MAILROOM	8' - 2"	5' - 4"	
S31	BLDG 1	YOGA ROOM	7' - 2"	13' - 6 1/4"	
S32	BLDG 1	AMENITY ENTRY	7' - 2"	6' - 4"	
S33	BLDG 1	BLDG 1	7' - 2"	10' - 2 5/8"	
S34	BLDG 1	OFFICES	7' - 2"	20' - 1 1/4"	
S35	BLDG 1	CYBER LOUNGE	7' - 2"	9' - 3"	
S36	BLDG 1	MEETING ROOM	7' - 2"	15' - 1 5/8"	
S37	BLDG 1	MEETING ROOM	7' - 2"	3' - 11 7/8"	
S16	BLDG 2	AMENITY ENTRY	9' - 0"	24' - 8 5/8"	
S17	BLDG 2	AMENITY VESTIBULE	8' - 10 7/8"	13' - 11 1/8"	
S18	BLDG 2	AMENITY VESTIBULE	8' - 10 7/8"	9' - 0 1/4"	
S19	BLDG 2	AMENITY	6' - 6"	2' - 8"	
S20	BLDG 2	AMENITY	8' - 0"	6' - 0"	
S21	BLDG 2	BIKE STORAGE OR TENANT STORAGE LOCKERS	8' - 0"	6' - 0"	
S22	BLDG 2	ENTRY CORRIDOR	8' - 2"	7' - 8 7/8"	
S23	BLDG 2	ENTRY CORRIDOR	8' - 2"	8' - 4"	
S24	BLDG 2	ENTRY CORRIDOR	8' - 2"	6' - 4"	
S25	BLDG 2	ENTRY CORRIDOR	8' - 10 7/8"	8' - 6 1/8"	
S26	BLDG 2	ENTRY CORRIDOR	8' - 10 7/8"	15' - 8 3/4"	
S27	BLDG 2	ENTRY CORRIDOR	8' - 2"	6' - 4"	
S28	BLDG 2	AMENITY LOBBY	9' - 0"	7' - 11 1/2"	
S29	BLDG 2	BIKE STORAGE OR TENANT STORAGE LOCKERS	8' - 10 7/8"	6' - 0"	
S38	BLDG 2	AMENITY ENTRY	7' - 2"	13' - 3 1/2"	

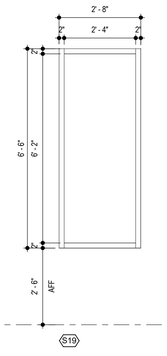
* THE GREY HATCH ON THE STOREFRONT ELEVATIONS REPRESENTS STEEL COLUMNS & BEAMS AND WALL FRAMING THAT IS WRAPPED IN BREAK METAL TO MATCH STOREFRONT FINISH

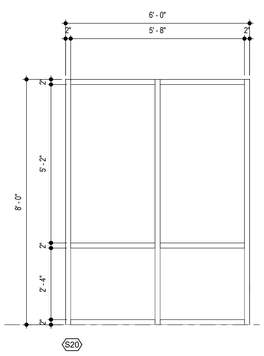


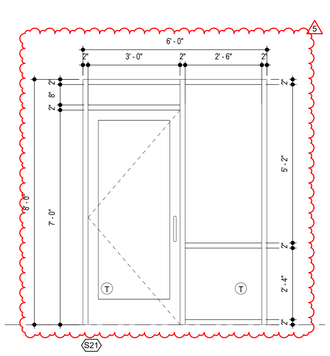


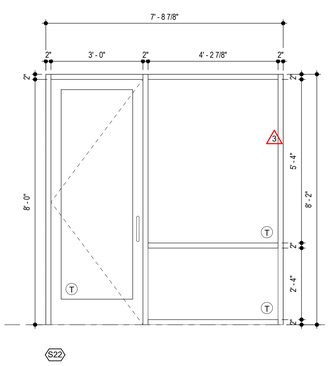


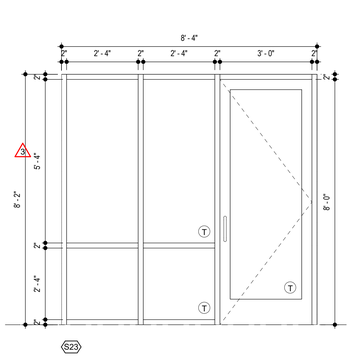












RELEASED FOR CONSTRUCTION
As Noted on Plans Review
Development Services Department
Lee's Summit, Missouri
05/23/2022

5.12.2022

ARCHITECT
STRUCTURAL ENGINEER
CIVIL ENGINEER
GENERAL CONTRACTOR
MECHANICAL ENGINEER
PLUMBING ENGINEER
ELECTRICAL ENGINEER

TR¡ ARCHITECTS
BOB D CAMPBELL & COMPANY
SM ENGINEERING
BRINKMANN CONSTRUCTORS
LATIMER SOMMERS & ASSOCIATES
LATIMER SOMMERS & ASSOCIATES
LATIMER SOMMERS & ASSOCIATES

Tegethoff DEVELOPMENT

The Signature at West Pryor

2100 AND 2150 NW LOWENSTEIN DR.
LEE'S SUMMIT, MISSOURI 64081

TRi ARCHITECTS

TRi Architects
1700 S. Brentwood Blvd.
St. Louis, Missouri 63144
© Copyright 2021
T: 314-395-9750
www.triarchitects.com

DATE: 7.15.2021

REVISIONS 6

3	Revision 1	2.11.2022
5	Revision 3	5.12.2022

DWG BY MKSS

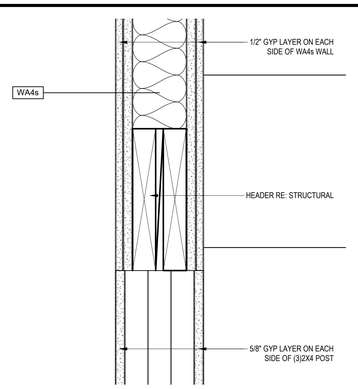
TR¡ PROJECT NO. 20-001

SHEET NO.

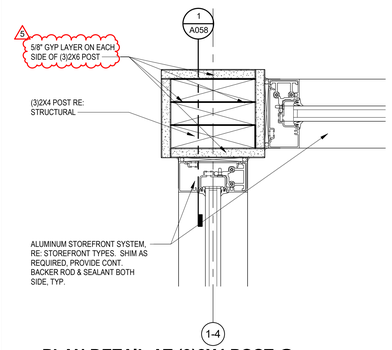
A056

STOREFRONT SCHEDULE

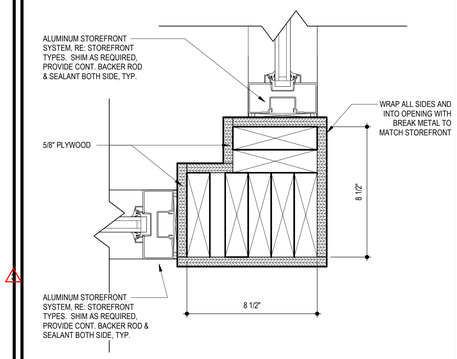
RELEASED FOR CONSTRUCTION
As Noted on Plans Review
Development Services Department
Lee's Summit, Missouri
05/23/2022



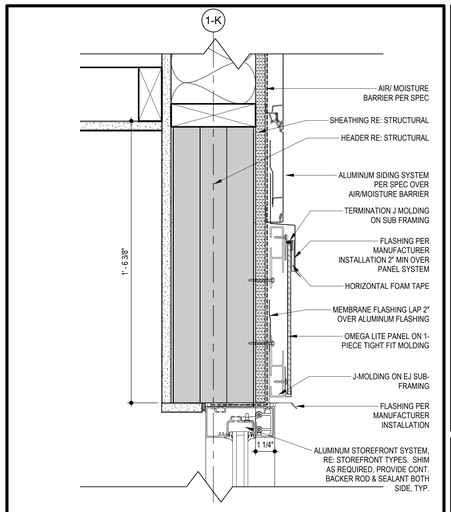
1 HEADER @ WOOD POST IN STOREFRONT
SCALE: 3" = 1'-0"



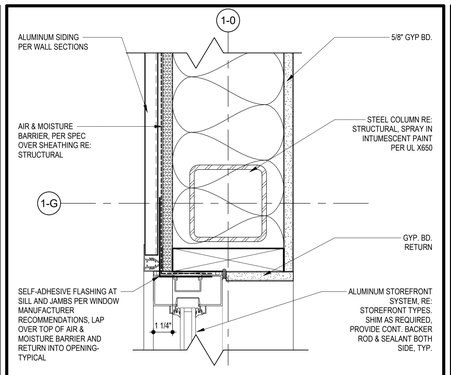
5 PLAN DETAIL AT (3)2X4 POST @ STOREFRONT CORNER
SCALE: 3" = 1'-0"



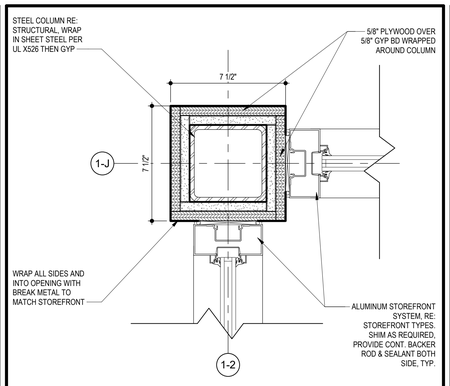
17 STOREFRONT 25 & 26 CORNER
SCALE: 3" = 1'-0"



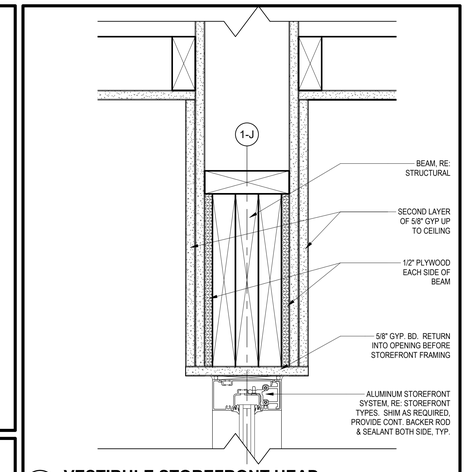
3 STOREFRONT HEAD @ 2 STORY AMENITY @ ALUMINUM SIDING
SCALE: 3" = 1'-0"



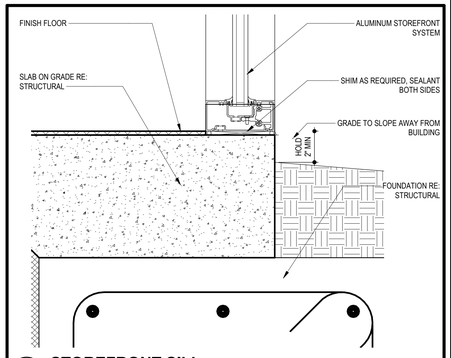
7 STOREFRONT JAMB @ ALUMINUM SIDING
SCALE: 3" = 1'-0"



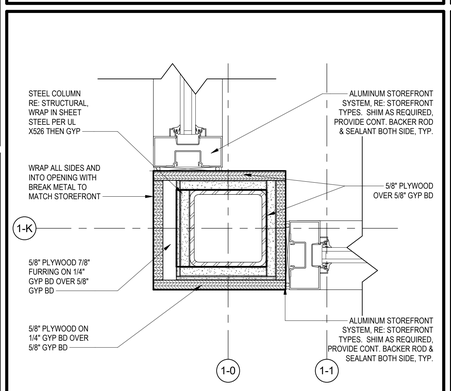
11 PLAN DETAIL @ VESTIBULE CORNER
SCALE: 3" = 1'-0"



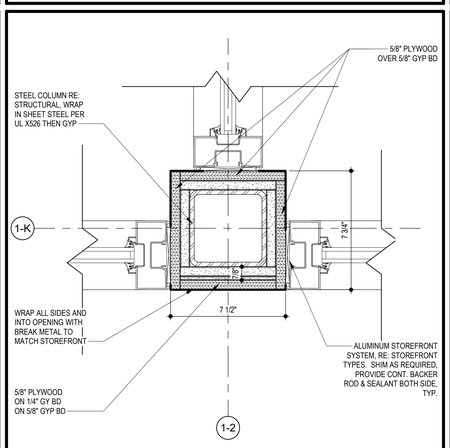
19 VESTIBULE STOREFRONT HEAD
SCALE: 3" = 1'-0"



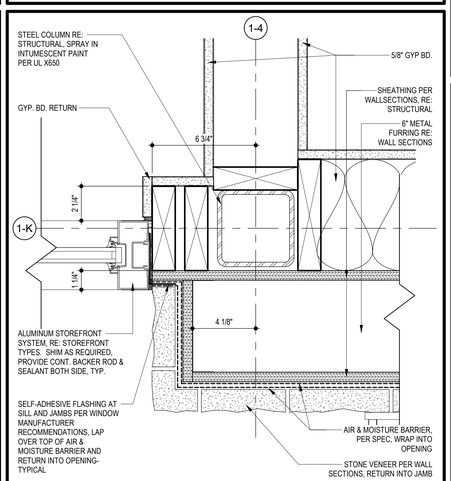
4 STOREFRONT SILL
SCALE: 3" = 1'-0"



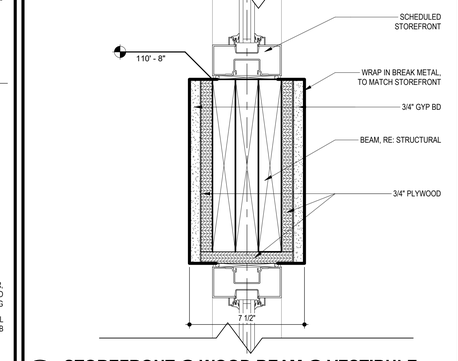
8 PLAN DETAIL @ STOREFRONT CORNER
SCALE: 3" = 1'-0"



12 PLAN DETAIL @ VESTIBULE STOREFRONT
SCALE: 3" = 1'-0"



16 STOREFRONT JAMB @ STONE VENEER @ VESTIBULE
SCALE: 3" = 1'-0"



20 STOREFRONT @ WOOD BEAM @ VESTIBULE
SCALE: 3" = 1'-0"

ARCHITECT — TR¡ ARCHITECTS
STRUCTURAL ENGINEER — BOB D CAMPBELL & COMPANY
CIVIL ENGINEER — SM ENGINEERING
GENERAL CONTRACTOR — BRINKMANN CONSTRUCTORS
MECHANICAL ENGINEER — LATIMER SOMMERS & ASSOCIATES
PLUMBING ENGINEER — LATIMER SOMMERS & ASSOCIATES
ELECTRICAL ENGINEER — LATIMER SOMMERS & ASSOCIATES

Together Development

The Signature at West Pryor

2100 AND 2150 NW LOWENSTEIN DR.
LEE'S SUMMIT, MISSOURI 64081

TR¡ ARCHITECTS

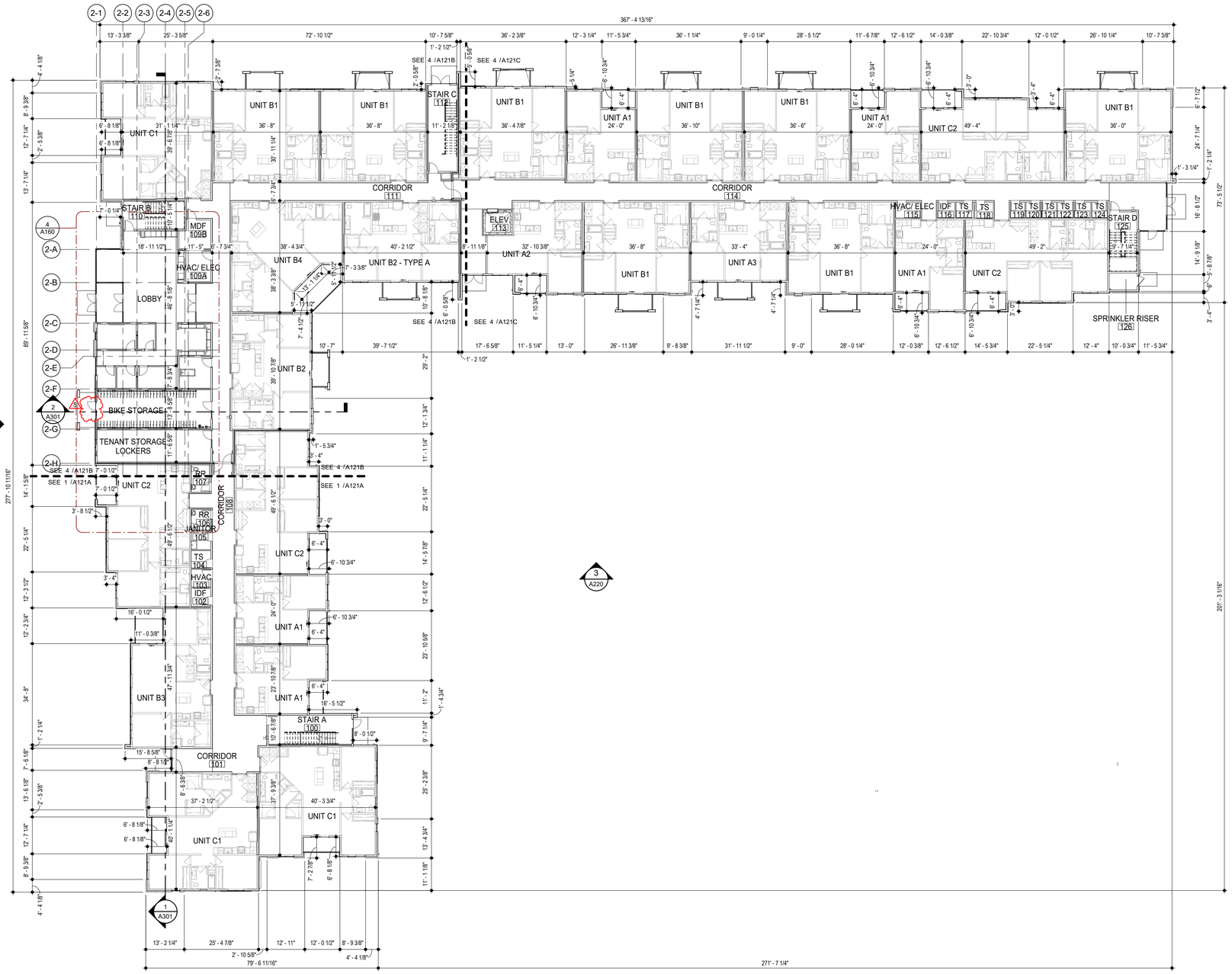
TR¡ Architects
1790 S. Brentwood Blvd.
St. Louis, Missouri 63144
T: 314-395-9750
www.triarchitects.com
© Copyright 2021

DATE: 7.15.2021

REVISIONS

3	Revision 1	2.11.2022
5	Revision 3	5.12.2022

DWG BY MKSS
TR¡ PROJECT NO. 20-001
SHEET NO. A058
STOREFRONT DETAILS



GENERAL NOTES

A. DIMENSIONS ARE TO FACE OF STUD OR FACE OF MASONRY.

B. FOR DOOR SCHEDULE SEE SHEET A040 XXX

C. FOR WINDOW SCHEDULE SEE SHEET A050 X

D. FOR PARTITION TYPES SEE SHEET A030 X

E. FOR UNIT INTERIOR PARTITION TYPES AND LOCATIONS REFER TO UNIT SHEETS (A400 THROUGH A415).

F. GENERAL CONTRACTOR WILL FURNISH & INSTALL 5 LB MULTIPURPOSE DRY CHEMICAL 2A:10B:C RATED FIRE EXTINGUISHERS w/ MOUNTING BRACKETS & ACCESSORIES @ 4'-0" A.F.F. AS REQUIRED BY GOVERNMENTAL AUTHORITIES. MAXIMUM TRAVEL DISTANCE OF 75'-0" FOR PLACEMENT IN PUBLIC SPACES AND CORRIDORS. A MINIMUM RATED 1A:10B:C FIRE EXTINGUISHER TO BE PROVIDED IN EACH UNIT.

G. CONTROL JOINTS SHOULD BE SPACED IN GYPSUM WALL BOARD TO LIMIT EXPANSES TO 30-'0" MAXIMUM. CONTROL JOINTS ARE RECOMMENDED AT DOOR JAMBS EXTENDING FROM DOOR HEAD TO CEILING. CEILING GYPSUM BOARD CONTROL JOINTS SHOULD LIMIT THE CEILING AREA TO 2,500 SF MAX. AND 50'-0" IN EITHER DIRECTION. CONTROL JOINT SHOULD BE INSTALLED WHERE THERE IS A CHANGE IN DIRECTION IN CEILING FRAMING/FURRING OR SPACE CONTROL JOINTS AT THE CEILING AND WALL PER THE MANUFACTURER'S RECOMMENDED INSTALLATION GUIDELINES. CEILING AND WALL CONTROL JOINTS ARE TO ALIGN AT ALL INTERSECTIONS WHERE APPLICABLE TO FORM A CONTINUOUS CONTROL JOINT. ENSURE THAT CONTROL JOINTS ARE LOCATED AT STRUCTURAL CONSTRUCTION JOINTS AND AT THE TOP AND BOTTOM OF ALL INTERIOR RAMPS.

H. UNLESS NOTED OTHERWISE, CORRIDOR PARTITION TYPE IN RESIDENTIAL AREA TO BE 1WF6s UNIT ENTRY RECESS PARTITION TYPE TO BE 1WA4s AND PARTITION TYPE BEHIND REFRIDERATOR TO BE 1WF4s

I. COORDINATE LOCATION OF BEARING WALLS INSIDE DWELLING UNITS WITH UNIT PLANS.

J. REFER TO LIFE SAFETY PLANS FOR ADDITIONAL INFORMATION ON FIRE RATED PARTITION LOCATIONS.

K. NO PENETRATIONS WITHIN 4' OF FIRE WALLS. VERIFY IN FIELD.

L. IT IS THE GENERAL CONTRACTOR'S RESPONSIBILITY TO COORDINATE, LOCATE AND CONFIRM ALL FLOOR SINK, UNDERGROUND / OVERHEAD PLUMBING AND ELECTRICAL STUB-UPS, SPOT GRADING AT PERIMETER FOUNDATIONS

M. THE ARCHITECT ASSUMES THE GENERAL CONTRACTOR HAS INCLUDED IN HIS BID THE HIGHEST QUALITY AND GREATEST QUANTITY FOR THE PURPOSE OF RESOLVING ANY CONFLICTS IN THE CONSTRUCTION DOCUMENTS WHICH ARE IMPLIED OR UNDEFINED.

N. * ASSUMED FINISH FLOOR ELEVATION = 100.00" VERIFY ACTUAL FINISH FLOOR ELEVATION WITH CIVIL DRAWINGS.

O. GENERAL CONTRACTOR TO CAULK AND SEAL EXPANSION JOINTS AT ALL EXTERIOR/INTERIOR CONCRETE - SEE MASONRY SPECIFICATIONS.

P. GENERAL CONTRACTOR SHALL VERIFY GOVERNMENTAL REQUIREMENTS PRIOR TO BID AND INCLUDE IN BID ALL COSTS ASSOCIATED WITH FIRE ALARM SYSTEM INCLUDING AUDIO/VISUAL DEVICES AND PULL STATIONS WHERE REQUIRED.

Q. ALL WINDOW AND SLIDER DOOR DIMENSIONS ARE TO CENTERLINE

FLOOR PLAN KEYED NOTES ⟨##⟩

1. FINISH FLOOR ELEVATION ASSUMED ELEVATION 100'-0" TYPICAL U.N.O. RE: CIVIL DRAWINGS FOR ALL GRADE INFORMATION.
2. 4" CONCRETE FLOOR SLAB WITH 6"x6" - W2.9xW2.9 W.W.F. ON 10 MIL POLY FILM VAPOR BARRIER ON 4" GRANULAR FILL. RE: STRUCTURAL DWGS.

4 BLDG 2 - FIRST FLOOR PLAN
SCALE: 1/16" = 1'-0"

RELEASED FOR CONSTRUCTION
As Noted on Plans Review
Development Services Department
Lee's Summit, Missouri
05/23/2022

5.12.2022

ARCHITECT — TR¡ ARCHITECTS
STRUCTURAL ENGINEER — BOB D CAMPBELL & COMPANY
CIVIL ENGINEER — SM ENGINEERING
GENERAL CONTRACTOR — BRINKMANN CONSTRUCTORS
MECHANICAL ENGINEER — LATIMER SOMMERS & ASSOCIATES
PLUMBING ENGINEER — LATIMER SOMMERS & ASSOCIATES
ELECTRICAL ENGINEER — LATIMER SOMMERS & ASSOCIATES

Together Development

The Signature at West Pryor

2100 AND 2150 NW LOWENSTEIN DR.
LEE'S SUMMIT, MISSOURI 64081

TR¡ ARCHITECTS

TR¡ Architects
1790 S. Brentwood Blvd.
St. Louis, Missouri 63144
T: 314-395-9750
www.triarchitects.com
© Copyright 2021

DATE: 7.15.2021

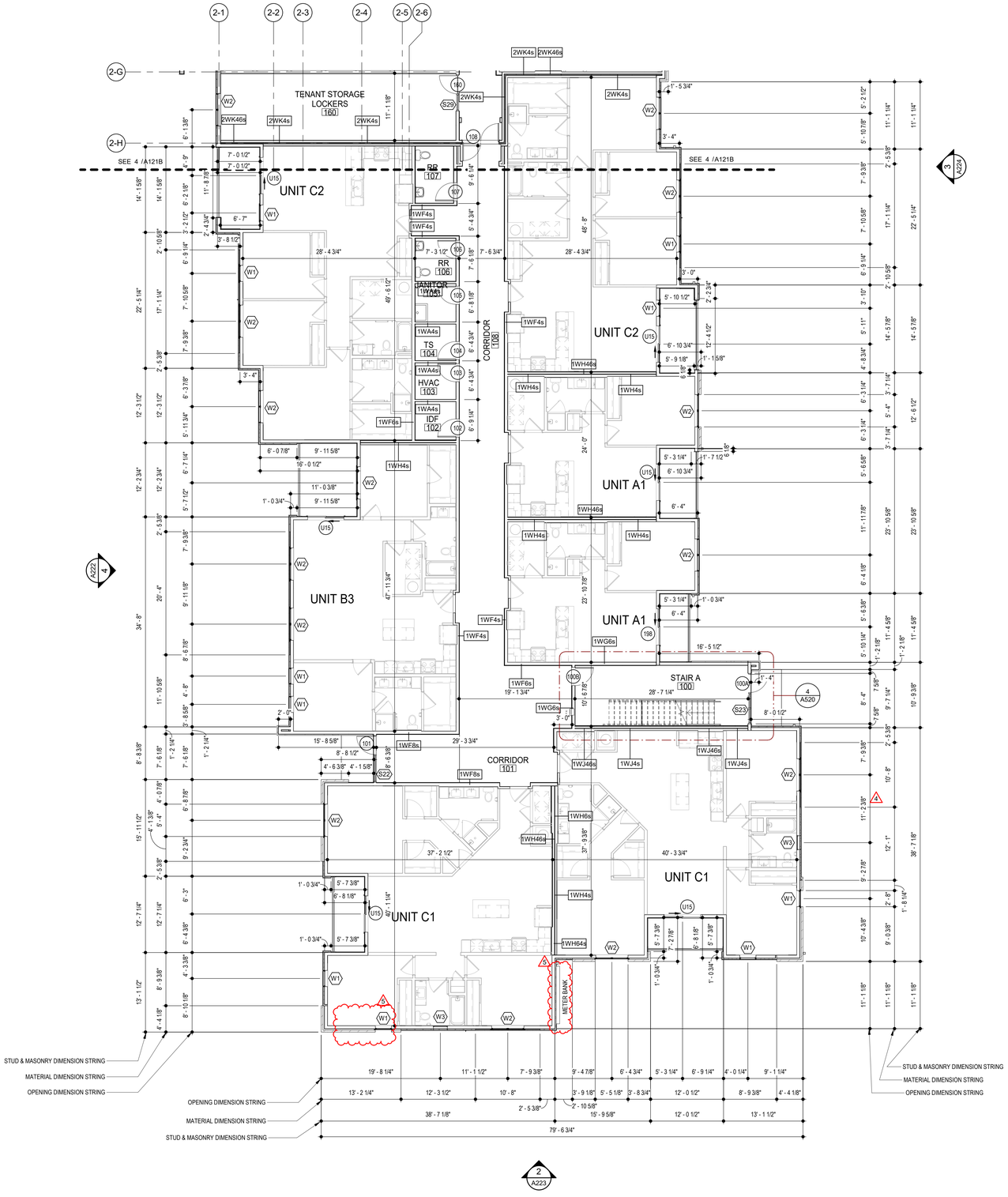
REVISIONS 4

5	Revision 3	5.12.2022

DWG BY MKSS
TR¡ PROJECT NO. 20-001
SHEET NO.

A121

BLDG 2 - FIRST FLOOR PLAN



1 BLDG 2-A - ENLARGED FIRST FLOOR PLAN

SCALE: 1/8" = 1'-0"

GENERAL NOTES

A. DIMENSIONS ARE TO FACE OF STUD OR FACE OF MASONRY.

B. FOR DOOR SCHEDULE SEE SHEET A040 XXX

C. FOR WINDOW SCHEDULE SEE SHEET A050 X

D. FOR PARTITION TYPES SEE SHEET A030 X

E. FOR UNIT INTERIOR PARTITION TYPES AND LOCATIONS REFER TO UNIT SHEETS (A400 THROUGH A415).

F. GENERAL CONTRACTOR WILL FURNISH & INSTALL 5 LB MULTIPURPOSE DRY CHEMICAL 2A:10B:C RATED FIRE EXTINGUISHERS w/ MOUNTING BRACKETS & ACCESSORIES @ 4'-0" A.F.F. AS REQUIRED BY GOVERNMENTAL AUTHORITIES. MAXIMUM TRAVEL DISTANCE OF 75'-0" FOR PLACEMENT IN PUBLIC SPACES AND CORRIDORS. A MINIMUM RATED 1A:10B:C FIRE EXTINGUISHER TO BE PROVIDED IN EACH UNIT.

G. CONTROL JOINTS SHOULD BE SPACED IN GYPSUM WALL BOARD TO LIMIT EXPANSES TO 30-'0" MAXIMUM. CONTROL JOINTS ARE RECOMMENDED AT DOOR JAMBS EXTENDING FROM DOOR HEAD TO CEILING. CEILING GYPSUM BOARD CONTROL JOINTS SHOULD LIMIT THE CEILING AREA TO 2,500 SF MAX. AND 50'-0" IN EITHER DIRECTION. CONTROL JOINT SHOULD BE INSTALLED WHERE THERE IS A CHANGE IN DIRECTION IN CEILING FRAMING/FURRING OR SPACE CONTROL JOINTS AT THE CEILING AND WALL PER THE MANUFACTURER'S RECOMMENDED INSTALLATION GUIDELINES. CEILING AND WALL CONTROL JOINTS ARE TO ALIGN AT ALL INTERSECTIONS WHERE APPLICABLE TO FORM A CONTINUOUS CONTROL JOINT. ENSURE THAT CONTROL JOINTS ARE LOCATED AT STRUCTURAL CONSTRUCTION JOINTS AND AT THE TOP AND BOTTOM OF ALL INTERIOR RAMPS.

H. UNLESS NOTED OTHERWISE, CORRIDOR PARTITION TYPE IN RESIDENTIAL AREA TO BE 1WF6s UNIT ENTRY RECESS PARTITION TYPE TO BE 1WA4s AND PARTITION TYPE BEHIND REFRIGERATOR TO BE 1WF4s.

I. COORDINATE LOCATION OF BEARING WALLS INSIDE DWELLING UNITS WITH UNIT PLANS.

J. REFER TO LIFE SAFETY PLANS FOR ADDITIONAL INFORMATION ON FIRE RATED PARTITION LOCATIONS.

K. NO PENETRATIONS WITHIN 4' OF FIRE WALLS. VERIFY IN FIELD.

L. IT IS THE GENERAL CONTRACTOR'S RESPONSIBILITY TO COORDINATE, LOCATE AND CONFIRM ALL FLOOR SINK, UNDERGROUND / OVERHEAD PLUMBING AND ELECTRICAL STUB-UPS, SPOT GRADING AT PERIMETER FOUNDATIONS

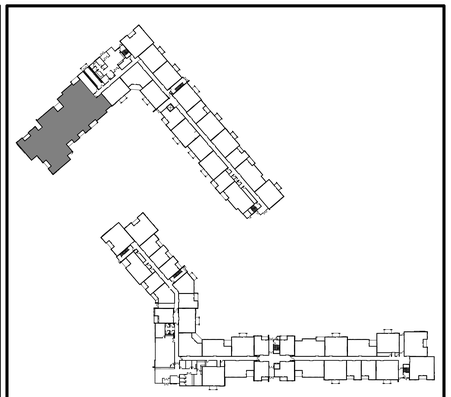
M. THE ARCHITECT ASSUMES THE GENERAL CONTRACTOR HAS INCLUDED IN HIS BID THE HIGHEST QUALITY AND GREATEST QUANTITY FOR THE PURPOSE OF RESOLVING ANY CONFLICTS IN THE CONSTRUCTION DOCUMENTS WHICH ARE IMPLIED OR UNDEFINED.

N. * ASSUMED FINISH FLOOR ELEVATION = 100.00" VERIFY ACTUAL FINISH FLOOR ELEVATION WITH CIVIL DRAWINGS.

O. GENERAL CONTRACTOR TO CAULK AND SEAL EXPANSION JOINTS AT ALL EXTERIOR/INTERIOR CONCRETE - SEE MASONRY SPECIFICATIONS.

P. GENERAL CONTRACTOR SHALL VERIFY GOVERNMENTAL REQUIREMENTS PRIOR TO BID AND INCLUDE IN BID ALL COSTS ASSOCIATED WITH FIRE ALARM SYSTEM INCLUDING AUDIO/VISUAL DEVICES AND PULL STATIONS WHERE REQUIRED.

Q. ALL WINDOW AND SLIDER DOOR DIMENSIONS ARE TO CENTERLINE



LOCATION PLAN

RELEASED FOR CONSTRUCTION
As Noted on Plans Review
Development Services Department
Lee's Summit, Missouri
05/23/2022

5.12.2022

ARCHITECT	TR¡ ARCHITECTS
STRUCTURAL ENGINEER	BOB D CAMPBELL & COMPANY
CIVIL ENGINEER	SM ENGINEERING
GENERAL CONTRACTOR	BRINKMANN CONSTRUCTORS
MECHANICAL ENGINEER	LATIMER SOMMERS & ASSOCIATES
PLUMBING ENGINEER	LATIMER SOMMERS & ASSOCIATES
ELECTRICAL ENGINEER	LATIMER SOMMERS & ASSOCIATES

Togethbuilt DEVELOPMENT

The Signature at West Pryor

2100 AND 2150 NW LOWENSTEIN DR.
LEE'S SUMMIT, MISSOURI 64081

TR¡ ARCHITECTS
TR¡ Architects
1790 S. Brentwood Blvd.
St. Louis, Missouri 63144
T: 314-395-9750
www.triarchitects.com
© Copyright 2021

DATE: 7.15.2021

REVISIONS

4	Revision 2	3.1.2022
5	Revision 3	5.12.2022

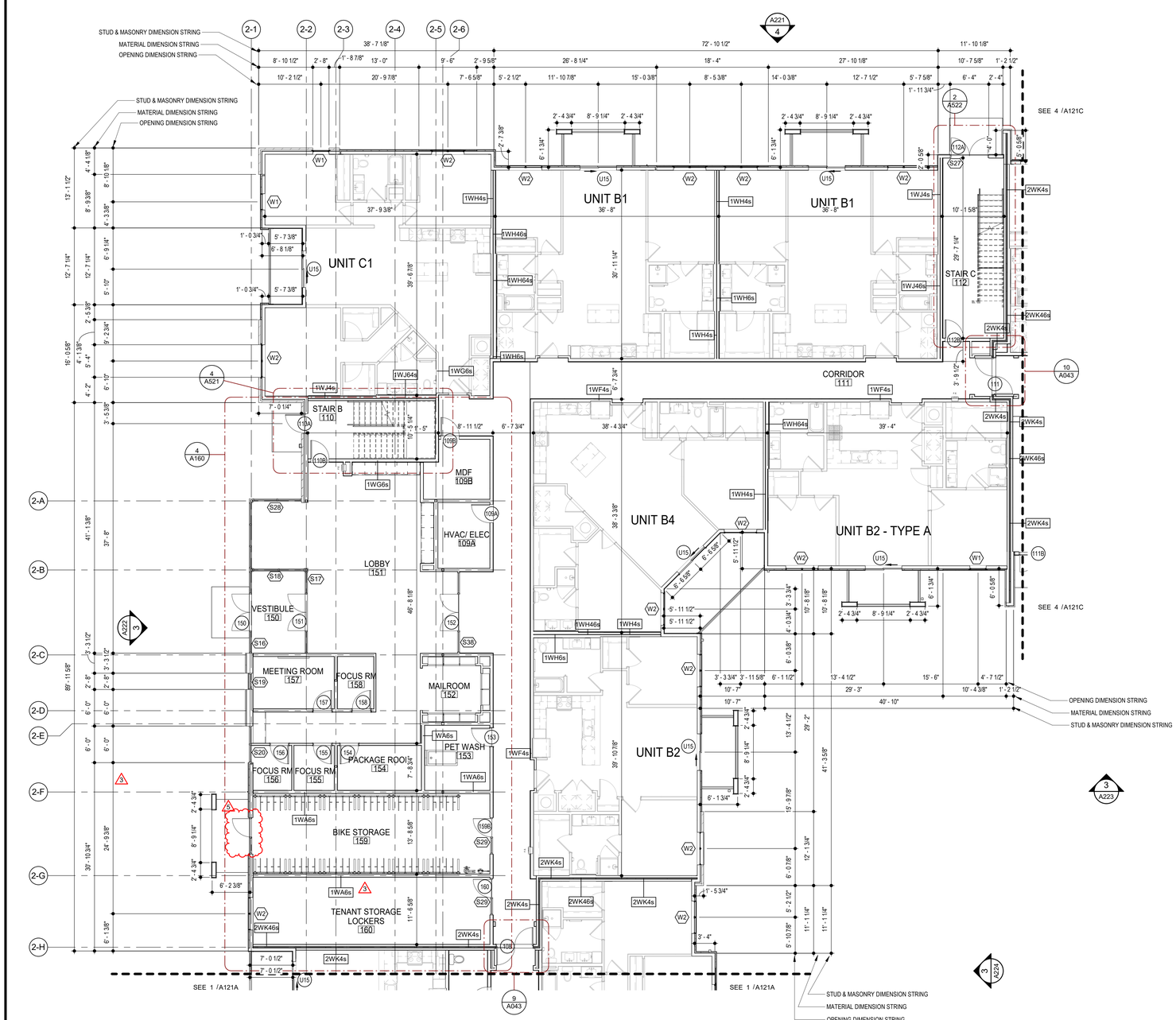
DWG BY MKSS

TR¡ PROJECT NO. 20-001

SHEET NO.

A121A

BLDG 2-A - ENLARGED FIRST FLOOR PLAN



4 BLDG 2-B - ENLARGED FIRST FLOOR PLAN

SCALE: 1/8" = 1'-0"

GENERAL NOTES

A. DIMENSIONS ARE TO FACE OF STUD OR FACE OF MASONRY.

B. FOR DOOR SCHEDULE SEE SHEET A040 XXX

C. FOR WINDOW SCHEDULE SEE SHEET A050 X

D. FOR PARTITION TYPES SEE SHEET A030 X

E. FOR UNIT INTERIOR PARTITION TYPES AND LOCATIONS REFER TO UNIT SHEETS (A400 THROUGH A415).

F. GENERAL CONTRACTOR WILL FURNISH & INSTALL 5 LB MULTIPURPOSE DRY CHEMICAL 2A:10B:C RATED FIRE EXTINGUISHERS w/ MOUNTING BRACKETS & ACCESSORIES @ 4'-0" A.F.F. AS REQUIRED BY GOVERNMENTAL AUTHORITIES. MAXIMUM TRAVEL DISTANCE OF 75'-0" FOR PLACEMENT IN PUBLIC SPACES AND CORRIDORS. A MINIMUM RATED 1A:10B:C FIRE EXTINGUISHER TO BE PROVIDED IN EACH UNIT.

G. CONTROL JOINTS SHOULD BE SPACED IN GYPSUM WALL BOARD TO LIMIT EXPANSES TO 30-'0" MAXIMUM. CONTROL JOINTS ARE RECOMMENDED AT DOOR JAMBS EXTENDING FROM DOOR HEAD TO CEILING. CEILING GYPSUM BOARD CONTROL JOINTS SHOULD LIMIT THE CEILING AREA TO 2,500 SF MAX. AND 50'-0" IN EITHER DIRECTION. CONTROL JOINT SHOULD BE INSTALLED WHERE THERE IS A CHANGE IN DIRECTION IN CEILING FRAMING/FURRING OR SPACE CONTROL JOINTS AT THE CEILING AND WALL PER THE MANUFACTURER'S RECOMMENDED INSTALLATION GUIDELINES. CEILING AND WALL CONTROL JOINTS ARE TO ALIGN AT ALL INTERSECTIONS WHERE APPLICABLE TO FORM A CONTINUOUS CONTROL JOINT. ENSURE THAT CONTROL JOINTS ARE LOCATED AT STRUCTURAL CONSTRUCTION JOINTS AND AT THE TOP AND BOTTOM OF ALL INTERIOR RAMPS.

H. UNLESS NOTED OTHERWISE, CORRIDOR PARTITION TYPE IN RESIDENTIAL AREA TO BE 1WF6s UNIT ENTRY RECESS PARTITION TYPE TO BE 1WA4s AND PARTITION TYPE BEHIND REFRIGERATOR TO BE 1WF4s

I. COORDINATE LOCATION OF BEARING WALLS INSIDE DWELLING UNITS WITH UNIT PLANS.

J. REFER TO LIFE SAFETY PLANS FOR ADDITIONAL INFORMATION ON FIRE RATED PARTITION LOCATIONS.

K. NO PENETRATIONS WITHIN 4' OF FIRE WALLS. VERIFY IN FIELD.

L. IT IS THE GENERAL CONTRACTOR'S RESPONSIBILITY TO COORDINATE, LOCATE AND CONFIRM ALL FLOOR SINK, UNDERGROUND / OVERHEAD PLUMBING AND ELECTRICAL STUB-UPS, SPOT GRADING AT PERIMETER FOUNDATIONS

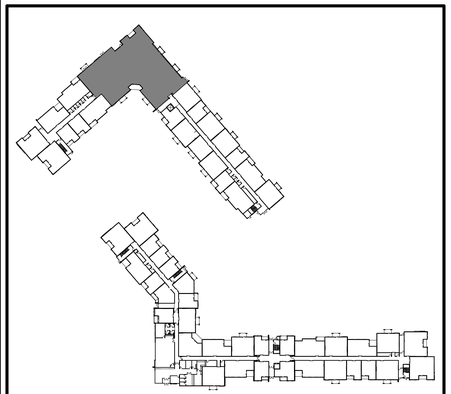
M. THE ARCHITECT ASSUMES THE GENERAL CONTRACTOR HAS INCLUDED IN HIS BID THE HIGHEST QUALITY AND GREATEST QUANTITY FOR THE PURPOSE OF RESOLVING ANY CONFLICTS IN THE CONSTRUCTION DOCUMENTS WHICH ARE IMPLIED OR UNDEFINED.

N. * ASSUMED FINISH FLOOR ELEVATION = 100.00" VERIFY ACTUAL FINISH FLOOR ELEVATION WITH CIVIL DRAWINGS.

O. GENERAL CONTRACTOR TO CAULK AND SEAL EXPANSION JOINTS AT ALL EXTERIOR/INTERIOR CONCRETE - SEE MASONRY SPECIFICATIONS.

P. GENERAL CONTRACTOR SHALL VERIFY GOVERNMENTAL REQUIREMENTS PRIOR TO BID AND INCLUDE IN BID ALL COSTS ASSOCIATED WITH FIRE ALARM SYSTEM INCLUDING AUDIO/VISUAL DEVICES AND PULL STATIONS WHERE REQUIRED.

Q. ALL WINDOW AND SLIDER DOOR DIMENSIONS ARE TO CENTERLINE



LOCATION PLAN

RELEASED FOR CONSTRUCTION
As Noted on Plans Review
Development Services Department
Lee's Summit, Missouri
05/23/2022

5.12.2022

ARCHITECT	TR;i ARCHITECTS
STRUCTURAL ENGINEER	BOB D CAMPBELL & COMPANY
CIVIL ENGINEER	SM ENGINEERING
GENERAL CONTRACTOR	BRINKMANN CONSTRUCTORS
MECHANICAL ENGINEER	LATIMER SOMMERS & ASSOCIATES
PLUMBING ENGINEER	LATIMER SOMMERS & ASSOCIATES
ELECTRICAL ENGINEER	LATIMER SOMMERS & ASSOCIATES

Together Development

The Signature at West Pryor

2100 AND 2150 NW LOWENSTEIN DR.
LEE'S SUMMIT, MISSOURI 64081

TRi ARCHITECTS

TRi Architects
1790 S. Brentwood Blvd.
St. Louis, Missouri 63144
T: 314-395-9750
www.triarchitects.com
© Copyright 2021

DATE: 7.15.2021

REVISIONS 6

3	Revision 1	2.11.2022
5	Revision 3	5.12.2022

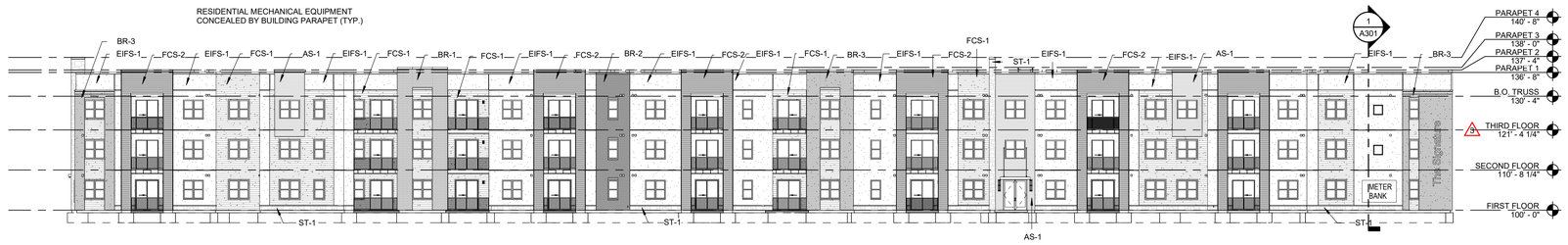
DWG BY MKSS

TR;i PROJECT NO. 20-001

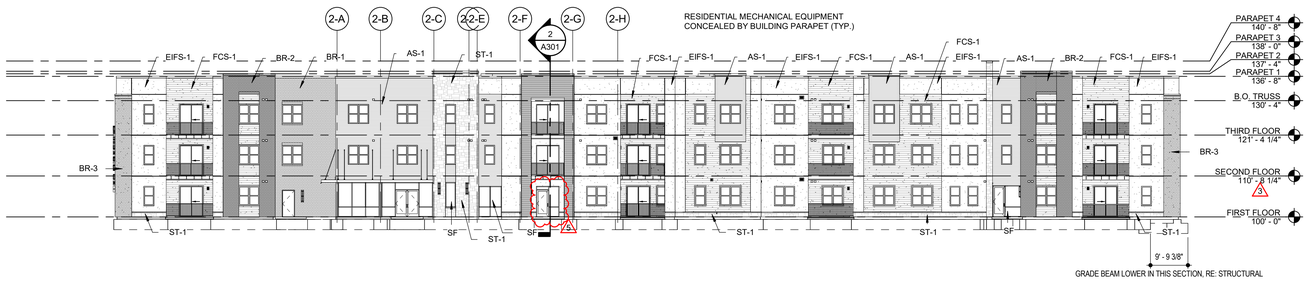
SHEET NO.

A121B

BLDG 2-B - ENLARGED FIRST FLOOR PLAN



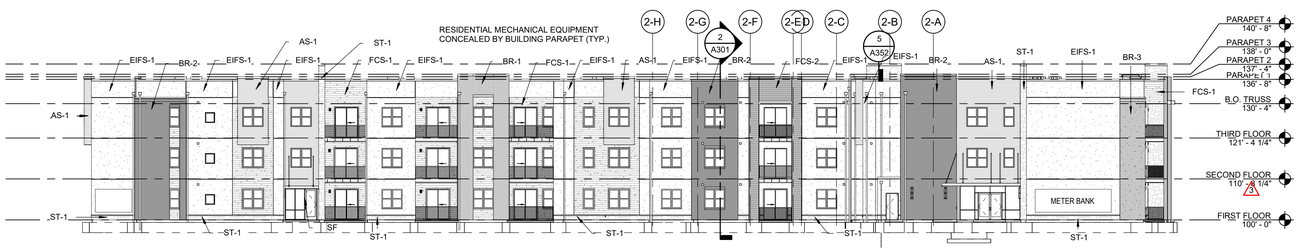
1 **BLDG 2 EAST ELEVATION**
SCALE: 1/16" = 1'-0"



2 **BLDG 2 NORTH ELEVATION**
SCALE: 1/16" = 1'-0"



3 **BLDG 2 WEST ELEVATION**
SCALE: 1/16" = 1'-0"



4 **BLDG 2 SOUTH ELEVATION**
SCALE: 1/16" = 1'-0"

EXTERIOR MATERIAL LEGEND

EIFS-1	EIFS	MFR: DRYVIT, COLOR: MOONLIGHT, TEXTURE: SAND PEBBLE
AS-1	ALUMINUM SIDING	MFR: FASTPLANK, COLOR: DARK WALNUT
FCS-1	FIBER CEMENT SIDING	MFR: JAMES HARDIE, SIZE: 5" COLOR: AGED PEWTER FCT-1, TRIM, THICKNESS: 1" - WIDTH: 3 1/2"
FCS-2	FIBER CEMENT SIDING	MFR: JAMES HARDIE, SIZE: 5" COLOR: IRON GRAY FCT-2, TRIM THICKNESS: 1" - WIDTH: 3 1/2"
FCT-3	FIBER CEMENT TRIM	MFR: JAMES HARDIE, THICKNESS: 1", WIDTH: 3 1/2" COLOR: ARTIC WHITE
BR-1	BRICK	MFR: HEBRON, COLOR: SEA GRAY #6, SIZE: MODULAR
BR-2	BRICK	MFR: ENDICOTT, COLOR: DARK IRONSPOT, SIZE: MODULAR
BR-3	BRICK	MFR: HEBRON, COLOR: MAROON, SIZE: MODULAR, TEXTURE: SMOOTH
ST-1	STONE VENEER	MFR: ELDORADO STONE, SERIES: LEDGECUT, COLOR: BIRCH
SF	STOREFRONT	COLOR: BLACK GLASS: 1" CLEAR LOW-E GLASS, RE: SPEC

RELEASED FOR CONSTRUCTION
As Noted on Plans Review
Development Services Department
Lee's Summit, Missouri
05/23/2022

5.12.2022

ARCHITECT	TR¡ ARCHITECTS
STRUCTURAL ENGINEER	BOB D CAMPBELL & COMPANY
CIVIL ENGINEER	SM ENGINEERING
GENERAL CONTRACTOR	BRINKMANN CONSTRUCTORS
MECHANICAL ENGINEER	LATIMER SOMMERS & ASSOCIATES
PLUMBING ENGINEER	LATIMER SOMMERS & ASSOCIATES
ELECTRICAL ENGINEER	LATIMER SOMMERS & ASSOCIATES

Together Development

The Signature at West Pryor

2100 AND 2150 NW LOWENSTEIN DR.
LEE'S SUMMIT, MISSOURI 64081

TRi ARCHITECTS

TRi Architects
1790 S. Brentwood Blvd.
St. Louis, Missouri 63144
T: 314-395-9750
www.trlarchitects.com
© Copyright 2021

DATE: 7.15.2021

REVISIONS 4

3	Revision 1	2.11.2022
5	Revision 3	5.12.2022

DWG BY MKSS

TR¡ PROJECT NO. 20-001

SHEET NO.

A220

BLDG 2 - OVERALL EXTERIOR ELEVATIONS

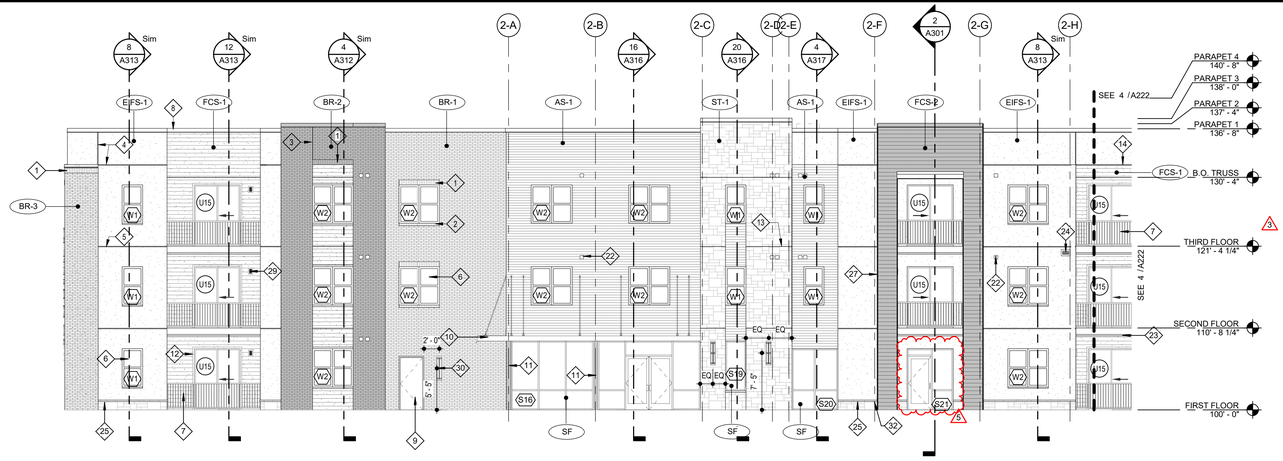
RELEASED FOR CONSTRUCTION
As Noted on Plans Review
Development Services Department
Lee's Summit, Missouri
05/23/2022

EXTERIOR MATERIAL LEGEND

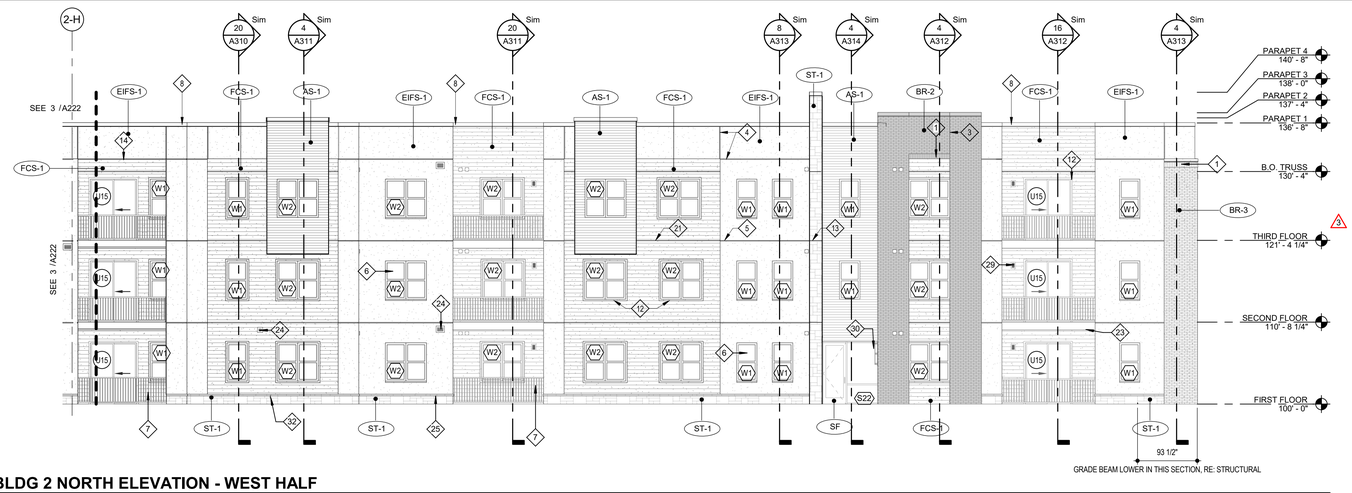
	EIFS-1	EIFS	MFR: DRYVIT, COLOR: MOONLIGHT, TEXTURE: SAND PEBBLE
	AS-1	ALUMINUM SIDING	MFR: FASTPLANK, COLOR: DARK WALNUT
	FCS-1	FIBER CEMENT SIDING	MFR: JAMES HARDIE, SIZE: 5" COLOR: AGED PEWTER FCT-1, TRIM, THICKNESS: 1" - WIDTH: 3 1/2"
	FCS-2	FIBER CEMENT SIDING	MFR: JAMES HARDIE, SIZE: 5" COLOR: IRON GRAY FCT-2, TRIM THICKNESS: 1" - WIDTH: 3 1/2"
	FCT-3	FIBER CEMENT TRIM	MFR: JAMES HARDIE, THICKNESS: 1", WIDTH: 3 1/2" COLOR: ARTIC WHITE
	BR-1	BRICK	MFR: HEBRON, COLOR: SEA GRAY #6, SIZE: MODULAR
	BR-2	BRICK	MFR: ENDICOTT, COLOR: DARK IRONSPOT, SIZE: MODULAR
	BR-3	BRICK	MFR: HEBRON, COLOR: MAROON, SIZE: MODULAR, TEXTURE: SMOOTH
	ST-1	STONE VENEER	MFR: ELDORADO STONE, SERIES: LEDGECUT, COLOR: BIRCH
	SF	STOREFRONT	COLOR: BLACK GLASS: 1" CLEAR LOW-E GLASS, RE: SPEC

KEYED NOTES

1. BRICK SOLDIER COURSE PROJECTED 1/2".
2. BRICK ROWLOCK COURSE.
3. MASONRY VENEER CONTROL JOINT
4. EIFS REVEAL.
5. EIFS EXPANSION JOINT AT EACH FLOOR LEVEL, COORDINATE WITH MANUF. DETAILS AND REQUIREMENTS.
6. VINYL WINDOW SYSTEM (BLACK).
7. PREFINISHED GUARDRAIL (BLACK).
8. PRE-FINISHED SHEET METAL COPING. COLOR TO MATCH ADJACENT MATERIAL (EIFS, FIBER CEMENT SIDING, STONE, ALUMINUM SIDING).
9. HOLLOW METAL DOOR AND FRAMES TO BE PAINTED TO MATCH ADJACENT FINISH.
10. PREMANUFACTURED ALUM. CANOPY - COLOR BLACK.
11. BRAKE METAL TO MATCH STOREFRONT.
12. 3 1/2" WIDE HARDIE TRIM, TO MATCH ADJACENT FIBER CEMENT SIDING. TRIM AT SLIDER DOORS IN EIFS TO BE FCT-3
13. STONE VENEER EXPANSION JOINT AT EACH FLOOR LEVEL
14. 9 1/4" WIDE HARDIE TRIM TO MATCH ADJACENT FIBER CEMENT SIDING
15. PREFINISHED SCUPPER AND/OR DOWNSPOUT COLOR TO MATCH EIFS-1
16. PREFINISHED SCUPPER AND/OR DOWNSPOUT COLOR TO MATCH FCS-1
17. PREFINISHED SCUPPER AND/OR DOWNSPOUT COLOR TO MATCH FCS-2
18. PREFINISHED SCUPPER AND/OR DOWNSPOUT COLOR TO MATCH AS-1
19. PREFINISHED SCUPPER AND/OR DOWNSPOUT COLOR TO MATCH BR-1
20. PREFINISHED SCUPPER AND/OR DOWNSPOUT COLOR TO MATCH BR-2
21. SIDING EXPANSION JOINT AT EACH FLOOR LEVEL, COORDINATE WITH MFG. DETAILS AND REQUIREMENTS.
22. UNIT VENT CAP HEIGHTS PER DETAILS ON A230. TO MATCH ADJACENT MATERIAL
23. 1X12 TREX FASCIA
24. LOUVER TO MATCH ADJACENT MATERIAL
25. STONE WATERTABLE
26. METAL PANEL SYSTEM TO MATCH STOREFRONT
27. 11 1/4" WIDE HARDIE TRIM TO MATCH ADJACENT FIBER CEMENT SIDING
28. PREFINISHED SCUPPER AND/OR DOWNSPOUT COLOR TO MATCH BR-3
29. UNIT PATIO LIGHT RE: UNIT LIGHTING SCHEDULE ON UNIT SHEETS
30. EXTERIOR SCONCE RE: LIGHTING SCHEDULE
31. FIRE DEPARTMENT CONNECTION
32. WALL HYDRANT AT 11" ABOVE GRADE



3 **BLDG 2 NORTH ELEVATION - EAST HALF**
SCALE: 1/8" = 1'-0"



4 **BLDG 2 NORTH ELEVATION - WEST HALF**
SCALE: 1/8" = 1'-0"

5.12.2022

ARCHITECT
STRUCTURAL ENGINEER
CIVIL ENGINEER
GENERAL CONTRACTOR
MECHANICAL ENGINEER
PLUMBING ENGINEER
ELECTRICAL ENGINEER

TR¡ ARCHITECTS
BOB D CAMPBELL & COMPANY
SM ENGINEERING
BRINKMANN CONSTRUCTORS
LATIMER SOMMERS & ASSOCIATES
LATIMER SOMMERS & ASSOCIATES
LATIMER SOMMERS & ASSOCIATES

Together Development

The Signature at West Pryor

2100 AND 2150 NW LOWENSTEIN DR.
LEE'S SUMMIT, MISSOURI 64081

TR¡ ARCHITECTS
TR¡ Architects
1790 S. Brentwood Blvd.
St. Louis, Missouri 63144
T: 314-395-9750
www.trlarchitects.com
© Copyright 2021

DATE: 7.15.2021

REVISIONS 6

3	Revision 1	2.11.2022
5	Revision 3	5.12.2022

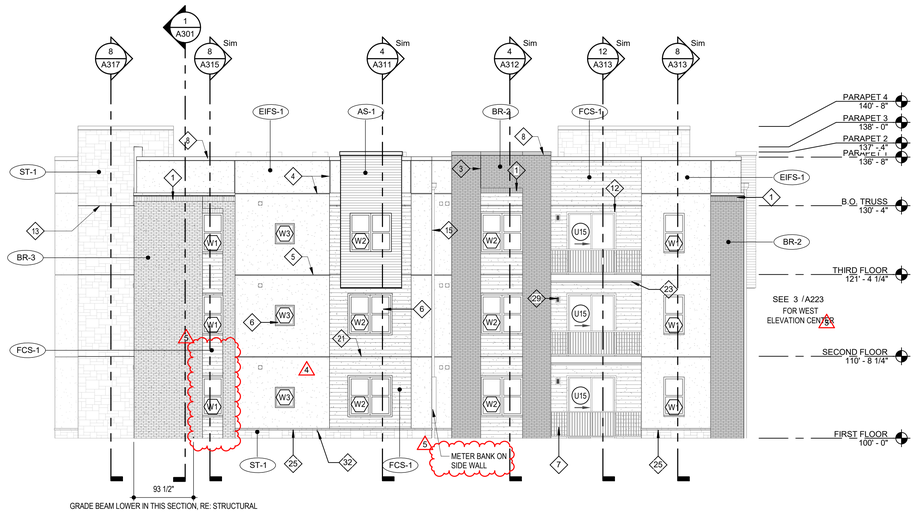
DWG BY MKSS

TR¡ PROJECT NO. 20-001

SHEET NO.

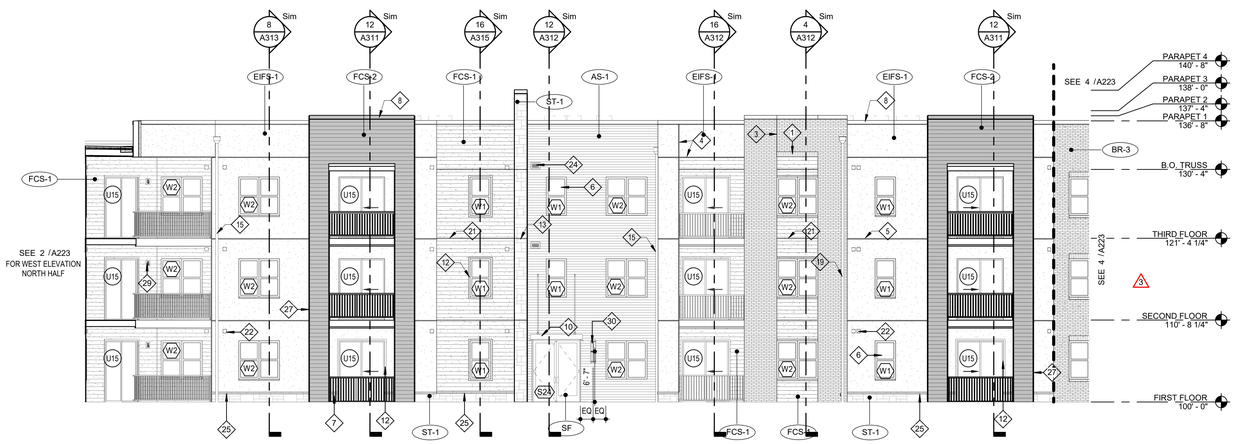
A222

BLDG 2 - ENLARGED NORTH ELEVATIONS



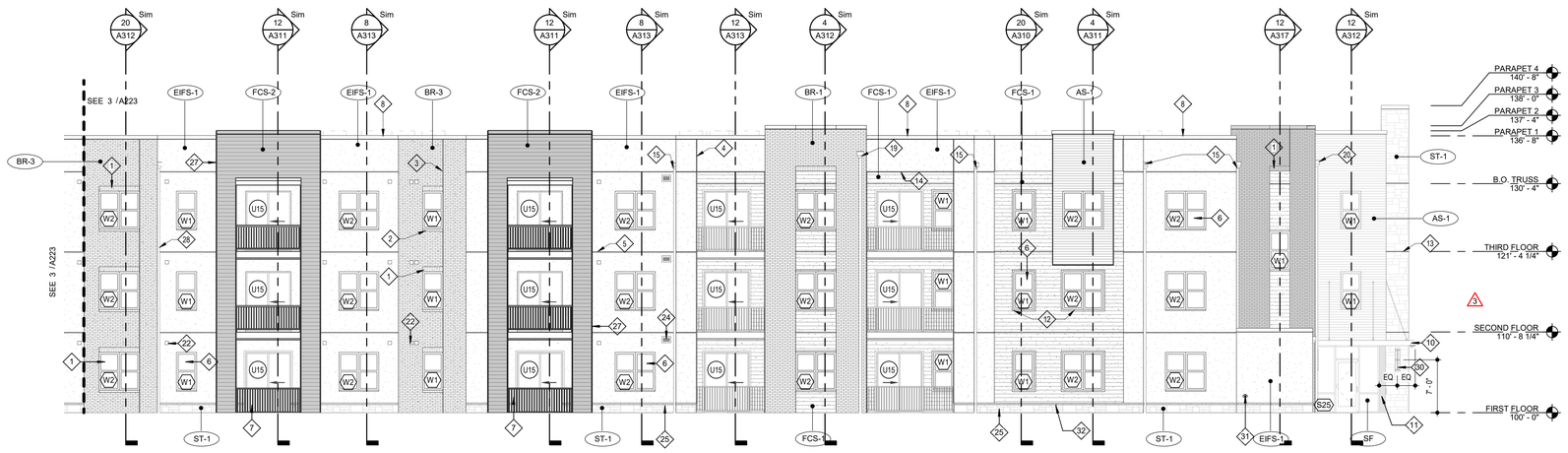
2 BLDG 2 WEST ELEVATION - NORTH HALF

SCALE: 1/8" = 1'-0"



3 BLDG 2 WEST ELEVATION - CENTER

SCALE: 1/8" = 1'-0"



4 BLDG 2 WEST ELEVATION - SOUTH HALF

SCALE: 1/8" = 1'-0"

EXTERIOR MATERIAL LEGEND

EIFS-1	EIFS	MFR: DRYVIT, COLOR: MOONLIGHT, TEXTURE: SAND PEBBLE
AS-1	ALUMINUM SIDING	MFR: FASTPLANK, COLOR: DARK WALNUT
FCS-1	FIBER CEMENT SIDING	MFR: JAMES HARDIE, SIZE: 5" COLOR: AGED PEWTER FCT-1, TRIM THICKNESS: 1" - WIDTH: 3 1/2"
FCS-2	FIBER CEMENT SIDING	MFR: JAMES HARDIE, SIZE: 5" COLOR: IRON GRAY FCT-2, TRIM THICKNESS: 1" - WIDTH: 3 1/2"
FCT-3	FIBER CEMENT TRIM	MFR: JAMES HARDIE, THICKNESS: 1", WIDTH: 3 1/2" COLOR: ARTIC WHITE
BR-1	BRICK	MFR: HEBRON, COLOR: SEA GRAY #6, SIZE: MODULAR
BR-2	BRICK	MFR: ENDICOTT, COLOR: DARK IRONSPOT, SIZE: MODULAR
BR-3	BRICK	MFR: HEBRON, COLOR: MAROON, SIZE: MODULAR, TEXTURE: SMOOTH
ST-1	STONE VENEER	MFR: ELDORADO STONE, SERIES: LEDGECUT, COLOR: BIRCH
SF	STOREFRONT	COLOR: BLACK GLASS: 1" CLEAR LOW-E GLASS, RE: SPEC

KEYED NOTES

1. BRICK SOLDIER COURSE PROJECTED 1/2".
2. BRICK ROWLOCK COURSE.
3. MASONRY VENEER CONTROL JOINT
4. EIFS REVEAL.
5. EIFS EXPANSION JOINT AT EACH FLOOR LEVEL, COORDINATE WITH MANUF. DETAILS AND REQUIREMENTS.
6. VINYL WINDOW SYSTEM (BLACK).
7. PREFINISHED GUARDRAIL (BLACK).
8. PRE-FINISHED SHEET METAL COPING. COLOR TO MATCH ADJACENT MATERIAL (EIFS, FIBER CEMENT SIDING, STONE, ALUMINUM SIDING).
9. HOLLOW METAL DOOR AND FRAMES TO BE PAINTED TO MATCH ADJACENT FINISH.
10. PREMANUFACTURED ALUM. CANOPY - COLOR BLACK.
11. BRAKE METAL TO MATCH STOREFRONT.
12. 3 1/2" WIDE HARDIE TRIM, TO MATCH ADJACENT FIBER CEMENT SIDING. TRIM AT SLIDER DOORS IN EIFS TO BE FCT-3
13. STONE VENEER EXPANSION JOINT AT EACH FLOOR LEVEL
14. 9 1/4" WIDE HARDIE TRIM TO MATCH ADJACENT FIBER CEMENT SIDING
15. PREFINISHED SCUPPER AND/OR DOWNSPOUT COLOR TO MATCH EIFS-1
16. PREFINISHED SCUPPER AND/OR DOWNSPOUT COLOR TO MATCH FCS-1
17. PREFINISHED SCUPPER AND/OR DOWNSPOUT COLOR TO MATCH FCS-2
18. PREFINISHED SCUPPER AND/OR DOWNSPOUT COLOR TO MATCH AS-1
19. PREFINISHED SCUPPER AND/OR DOWNSPOUT COLOR TO MATCH BR-1
20. PREFINISHED SCUPPER AND/OR DOWNSPOUT COLOR TO MATCH BR-2
21. SIDING EXPANSION JOINT AT EACH FLOOR LEVEL, COORDINATE WITH MFG. DETAILS AND REQUIREMENTS.
22. UNIT VENT CAP HEIGHTS PER DETAILS ON A230. TO MATCH ADJACENT MATERIAL
23. 1X12 TREX FASCIA
24. LOUVER TO MATCH ADJACENT MATERIAL
25. STONE WATERTABLE
26. METAL PANEL SYSTEM TO MATCH STOREFRONT
27. 11 1/4" WIDE HARDIE TRIM TO MATCH ADJACENT FIBER CEMENT SIDING
28. PREFINISHED SCUPPER AND/OR DOWNSPOUT COLOR TO MATCH BR-3
29. UNIT PATIO LIGHT RE: UNIT LIGHTING SCHEDULE ON UNIT SHEETS
30. EXTERIOR SCONCE RE: LIGHTING SCHEDULE
31. FIRE DEPARTMENT CONNECTION
32. WALL HYDRANT AT 11" ABOVE GRADE

RELEASED FOR CONSTRUCTION
As Noted on Plans Review
Development Services Department
Lee's Summit, Missouri
05/23/2022

5.12.2022

ARCHITECT
STRUCTURAL ENGINEER
CIVIL ENGINEER
GENERAL CONTRACTOR
MECHANICAL ENGINEER
PLUMBING ENGINEER
ELECTRICAL ENGINEER

TR¡ ARCHITECTS
BOB D CAMPBELL & COMPANY
SM ENGINEERING
BRINKMANN CONSTRUCTORS
LATIMER SOMMERS & ASSOCIATES
LATIMER SOMMERS & ASSOCIATES
LATIMER SOMMERS & ASSOCIATES

Tegethoff DEVELOPMENT

The Signature at West Pryor

2100 AND 2150 NW LOWENSTEIN DR.
LEE'S SUMMIT, MISSOURI 64081

TR¡ ARCHITECTS

TR¡ Architects
1790 S. Brentwood Blvd.
St. Louis, Missouri 63144
T: 314-395-9750
www.triarchitects.com
© Copyright 2021

DATE: 7.15.2021

REVISIONS 9

3	Revision 1	2.11.2022
4	Revision 2	3.1.2022
5	Revision 3	5.12.2022

DWG BY MKSS

TR¡ PROJECT NO. 20-001

SHEET NO.

A223

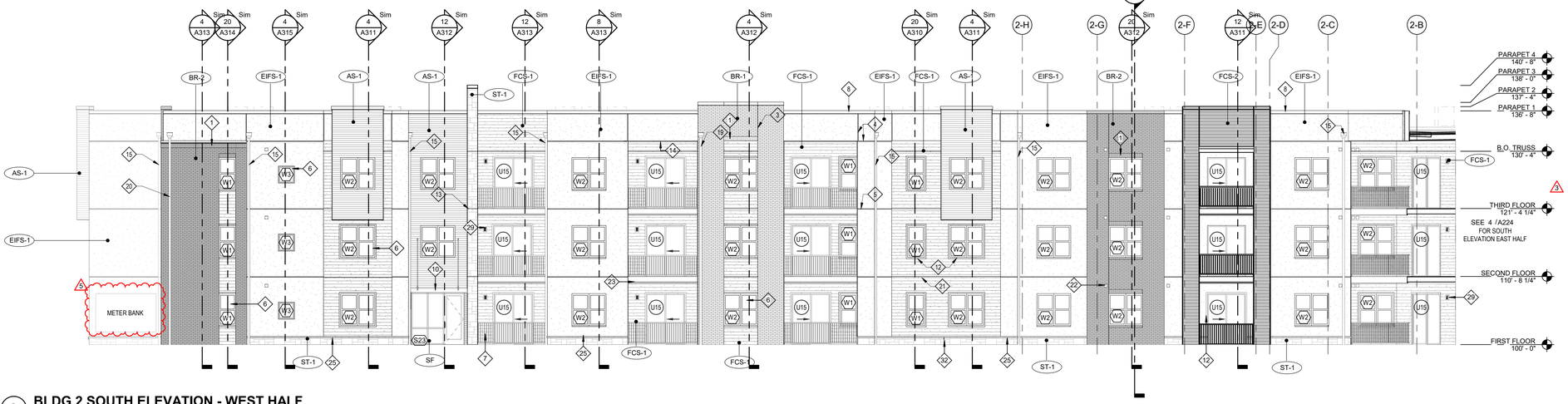
BLDG 2 - ENLARGED WEST ELEVATIONS

KEYED NOTES

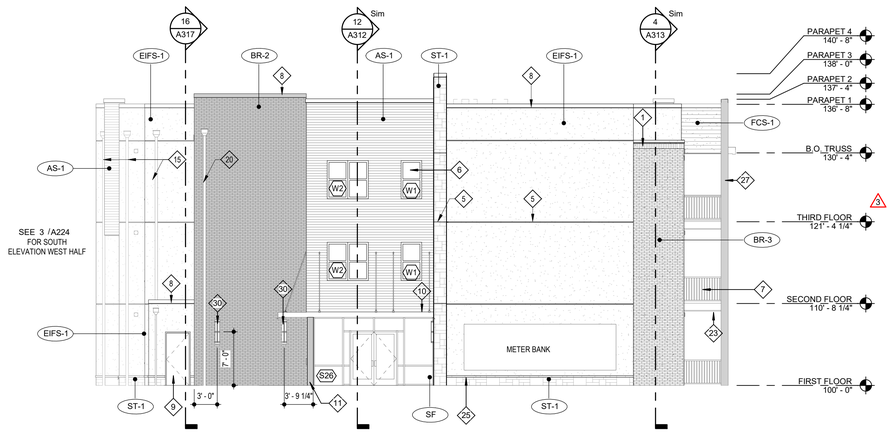
1. BRICK SOLDIER COURSE PROJECTED 1/2".
2. BRICK ROWLOCK COURSE.
3. MASONRY VENEER CONTROL JOINT
4. EIFS REVEAL.
5. EIFS EXPANSION JOINT AT EACH FLOOR LEVEL, COORDINATE WITH MANUF. DETAILS AND REQUIREMENTS.
6. VINYL WINDOW SYSTEM (BLACK).
7. PREFINISHED GUARDRAIL (BLACK).
8. PRE-FINISHED SHEET METAL COPING. COLOR TO MATCH ADJACENT MATERIAL (EIFS, FIBER CEMENT SIDING, STONE, ALUMINUM SIDING).
9. HOLLOW METAL DOOR AND FRAMES TO BE PAINTED TO MATCH ADJACENT FINISH.
10. PREMANUFACTURED ALUM. CANOPY - COLOR BLACK.
11. BRAKE METAL TO MATCH STOREFRONT.
12. 3 1/2" WIDE HARDIE TRIM, TO MATCH ADJACENT FIBER CEMENT SIDING. TRIM AT SLIDER DOORS IN EIFS TO BE FCT-3
13. STONE VENEER EXPANSION JOINT AT EACH FLOOR LEVEL
14. 9 1/4" WIDE HARDIE TRIM TO MATCH ADJACENT FIBER CEMENT SIDING
15. PREFINISHED SCUPPER AND/OR DOWNSPOUT COLOR TO MATCH EIFS-1
16. PREFINISHED SCUPPER AND/OR DOWNSPOUT COLOR TO MATCH FCS-1
17. PREFINISHED SCUPPER AND/OR DOWNSPOUT COLOR TO MATCH FCS-2
18. PREFINISHED SCUPPER AND/OR DOWNSPOUT COLOR TO MATCH AS-1
19. PREFINISHED SCUPPER AND/OR DOWNSPOUT COLOR TO MATCH BR-1
20. PREFINISHED SCUPPER AND/OR DOWNSPOUT COLOR TO MATCH BR-2
21. SIDING EXPANSION JOINT AT EACH FLOOR LEVEL, COORDINATE WITH MFG. DETAILS AND REQUIREMENTS.
22. UNIT VENT CAP HEIGHTS PER DETAILS ON A230. TO MATCH ADJACENT MATERIAL
23. 1X12 TREX FASCIA
24. LOUVER TO MATCH ADJACENT MATERIAL
25. STONE WATERTABLE
26. METAL PANEL SYSTEM TO MATCH STOREFRONT
27. 11 1/4" WIDE HARDIE TRIM TO MATCH ADJACENT FIBER CEMENT SIDING
28. PREFINISHED SCUPPER AND/OR DOWNSPOUT COLOR TO MATCH BR-3
29. UNIT PATIO LIGHT RE: UNIT LIGHTING SCHEDULE ON UNIT SHEETS
30. EXTERIOR SCONCE RE: LIGHTING SCHEDULE
31. FIRE DEPARTMENT CONNECTION
32. WALL HYDRANT AT 11" ABOVE GRADE

EXTERIOR MATERIAL LEGEND

EIFS-1	EIFS	MFR: DRYVIT, COLOR: MOONLIGHT, TEXTURE: SAND PEBBLE
AS-1	ALUMINUM SIDING	MFR: FASTPLANK, COLOR: DARK WALNUT
FCS-1	FIBER CEMENT SIDING	MFR: JAMES HARDIE, SIZE: 5" COLOR: AGED PEWTER FCT-1, TRIM, THICKNESS: 1" - WIDTH: 3 1/2"
FCS-2	FIBER CEMENT SIDING	MFR: JAMES HARDIE, SIZE: 5" COLOR: IRON GRAY FCT-2, TRIM THICKNESS: 1" - WIDTH: 3 1/2"
FCT-3	FIBER CEMENT TRIM	MFR: JAMES HARDIE, THICKNESS: 1", WIDTH: 3 1/2" COLOR: ARTIC WHITE
BR-1	BRICK	MFR: HEBRON, COLOR: SEA GRAY #6, SIZE: MODULAR
BR-2	BRICK	MFR: ENDICOTT, COLOR: DARK IRONSPOT, SIZE: MODULAR
BR-3	BRICK	MFR: HEBRON, COLOR: MAROON, SIZE: MODULAR, TEXTURE: SMOOTH
ST-1	STONE VENEER	MFR: ELDORADO STONE, SERIES: LEDGECUT, COLOR: BIRCH
SF	STOREFRONT	COLOR: BLACK GLASS: 1" CLEAR LOW-E GLASS, RE: SPEC



3 BLDG 2 SOUTH ELEVATION - WEST HALF
SCALE: 1/8" = 1'-0"



4 BLDG 2 SOUTH ELEVATION - EAST HALF
SCALE: 1/8" = 1'-0"

RELEASED FOR CONSTRUCTION
As Noted on Plans Review
Development Services Department
Lee's Summit, Missouri
05/23/2022

5.12.2022

ARCHITECT — TR.i ARCHITECTS
STRUCTURAL ENGINEER — BOB D CAMPBELL & COMPANY
CIVIL ENGINEER — SM ENGINEERING
GENERAL CONTRACTOR — BRINKMANN CONSTRUCTORS
MECHANICAL ENGINEER — LATIMER SOMMERS & ASSOCIATES
PLUMBING ENGINEER — LATIMER SOMMERS & ASSOCIATES
ELECTRICAL ENGINEER — LATIMER SOMMERS & ASSOCIATES

Tegethoff DEVELOPMENT

The Signature at West Pryor

2100 AND 2150 NW LOWENSTEIN DR.
LEE'S SUMMIT, MISSOURI 64081

TR.i ARCHITECTS
TR.i Architects
1790 S. Brentwood Blvd.
St. Louis, Missouri 63144
T: 314-395-9750
www.triarchitects.com

© Copyright 2021

DATE: 7.15.2021

REVISIONS 4

3	Revision 1	2.11.2022
5	Revision 3	5.12.2022

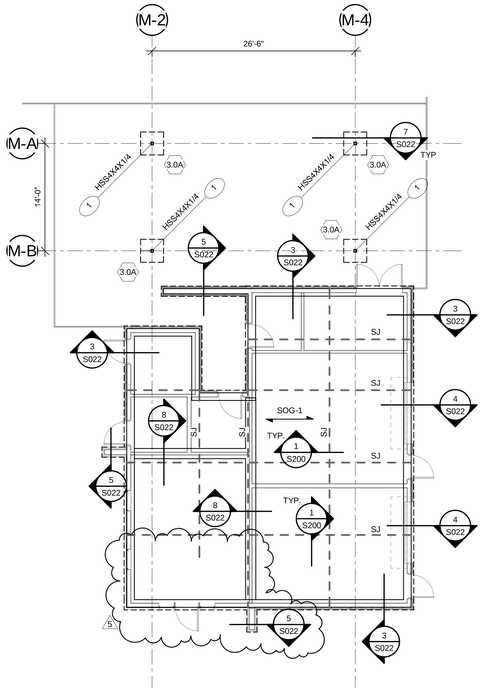
DWG BY MKSS

TR.i PROJECT NO. 20-001

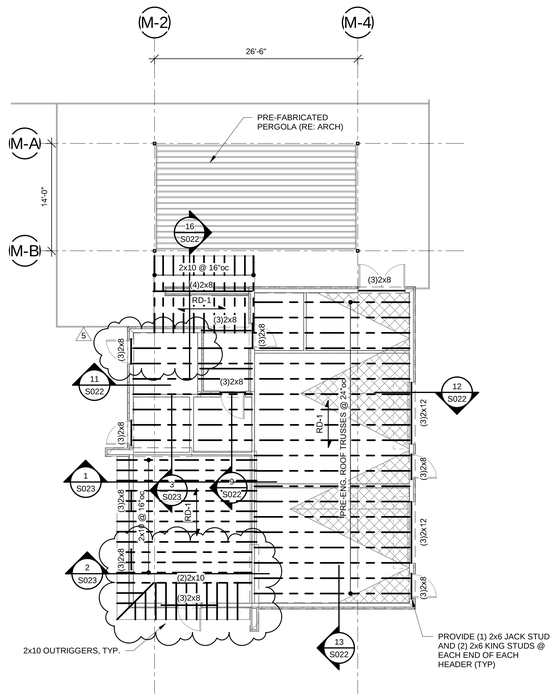
SHEET NO.

A224

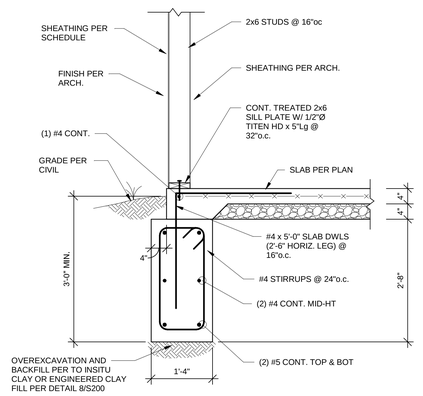
BLDG 2 - ENLARGED SOUTH ELEVATIONS



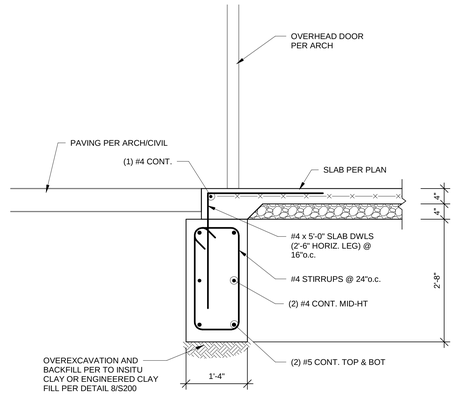
1 FOUNDATION PLAN
1/8" = 1'-0"



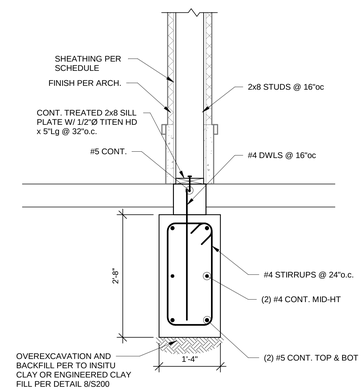
2 ROOF FRAMING PLAN
1/8" = 1'-0"



3 SECTION
3/4" = 1'-0"



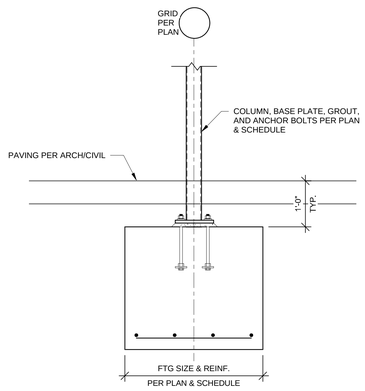
4 SECTION
3/4" = 1'-0"



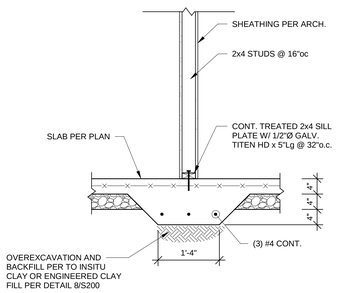
5 SECTION
3/4" = 1'-0"

5 NOT USED

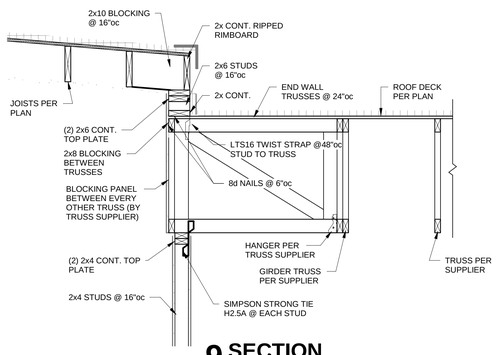
6 SECTION
3/4" = 1'-0"



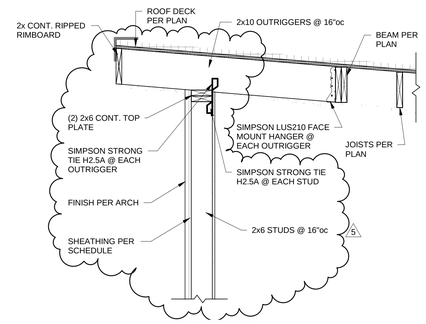
7 SECTION
3/4" = 1'-0"



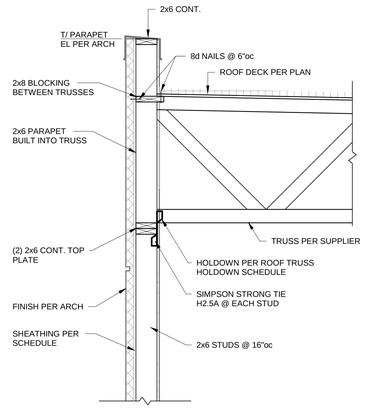
8 SECTION
3/4" = 1'-0"



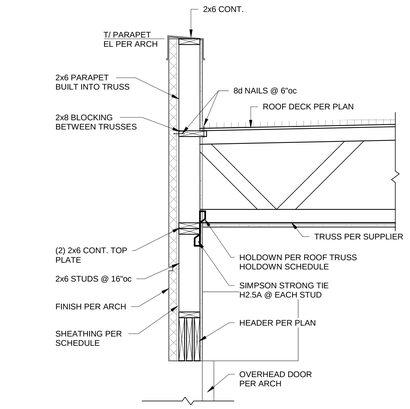
9 SECTION
3/4" = 1'-0"



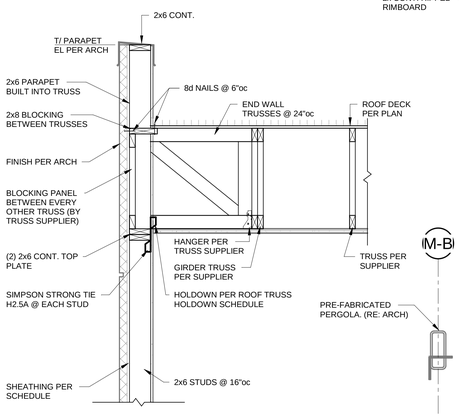
10 SECTION
3/4" = 1'-0"



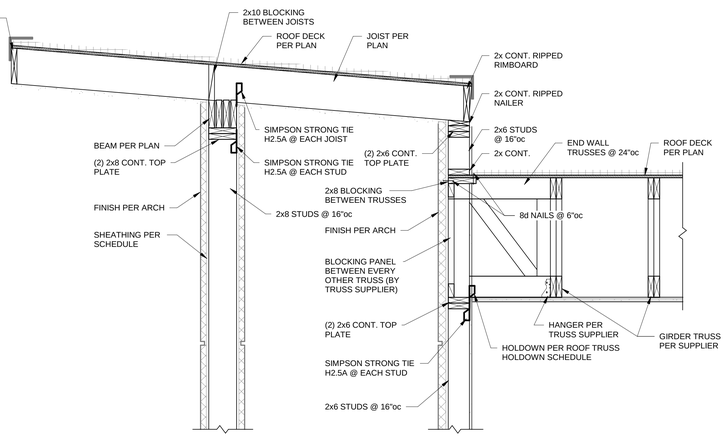
11 SECTION
3/4" = 1'-0"



12 SECTION
3/4" = 1'-0"



13 SECTION
3/4" = 1'-0"



16 SECTION
3/4" = 1'-0"

RELEASED FOR CONSTRUCTION
As Noted on Plans Review
Development Services Department
Lee's Summit, Missouri
05/23/2022

STATE OF MISSOURI
CHRISTOPHER A. BARNHART
NUMBER PE-2010026837
2021.12.17 09:45:07

ARCHITECT
STRUCTURAL ENGINEER
CIVIL ENGINEER
GENERAL CONTRACTOR
MECHANICAL ENGINEER
PLUMBING ENGINEER
ELECTRICAL ENGINEER

TR¡ ARCHITECTS
BOB D CAMPBELL & COMPANY
SM ENGINEERING
BRINKMANN CONSTRUCTORS
LATIMER SOMMERS & ASSOCIATES
LATIMER SOMMERS & ASSOCIATES
LATIMER SOMMERS & ASSOCIATES

Tegethoff DEVELOPMENT

The Signature at West Pryor

2100 NW LOWENSTEIN DR.
LEE'S SUMMIT, MISSOURI 64081

TR¡ ARCHITECTS

TR¡ Architects
1790 S. Brentwood Blvd.
St. Louis, Missouri 63144
T: 314-395-9750
www.triarchitects.com

© Copyright 2021

DATE: 7.15.2021

REVISIONS 4

1	PERMIT COMMENTS	8.17.2021
5	Revision 3	5.12.2022

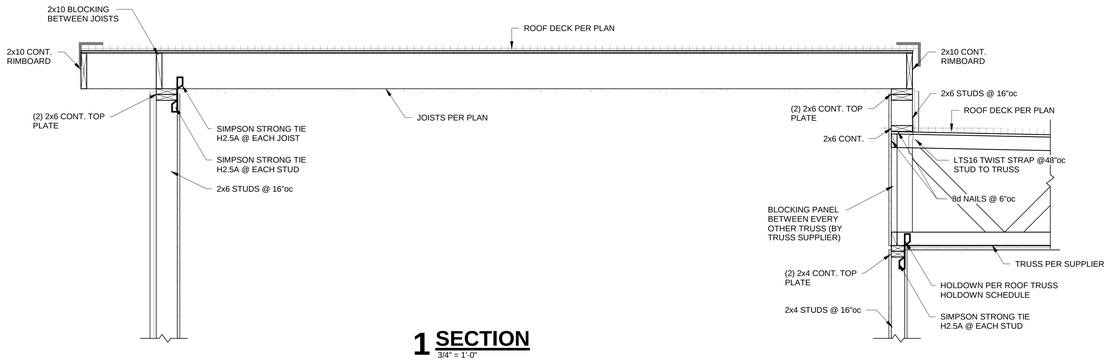
DWG BY CB

TR¡ PROJECT NO. 20-001

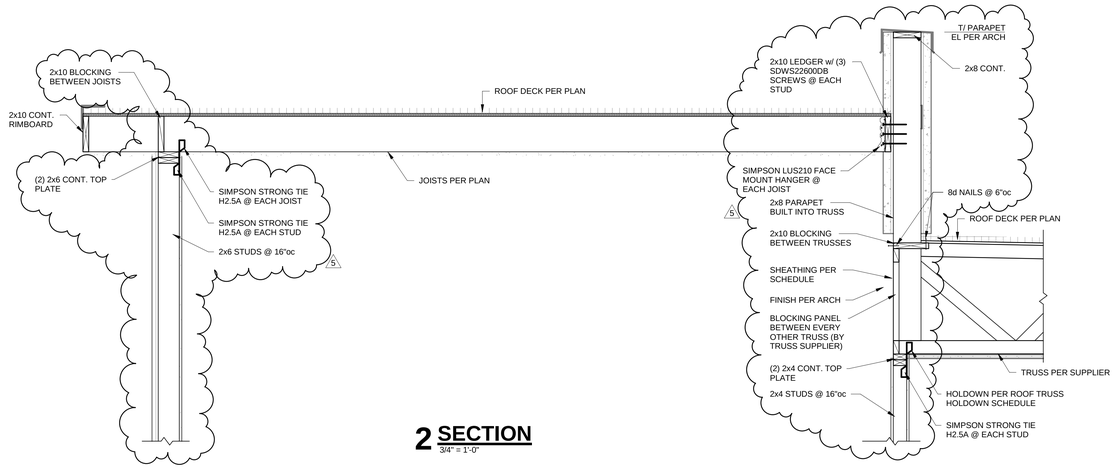
SHEET NO.

S022

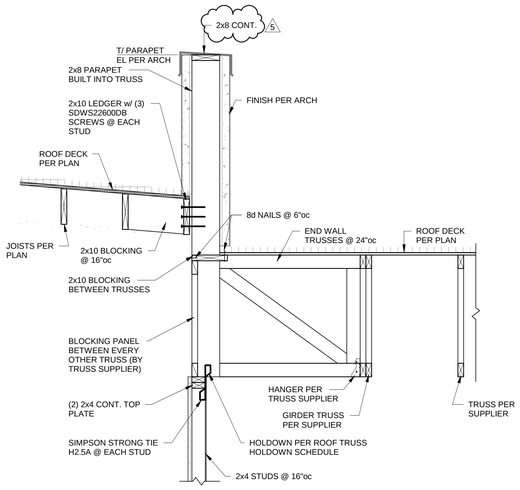
1 MAINTENANCE SHED/POOL HOUSE



1 SECTION
3/4" = 1'-0"



2 SECTION
3/4" = 1'-0"



3 SECTION
3/4" = 1'-0"

RELEASED FOR CONSTRUCTION
As Noted on Plans Review
Development Services Department
Lee's Summit, Missouri
05/23/2022

STATE OF MISSOURI — CHRISTOPHER A. BUSHMAN — NUMBER PE-2010026837 — 12/7/2021 — PROFESSIONAL ENGINEER

ARCHITECT	TR,i ARCHITECTS
STRUCTURAL ENGINEER	BOB D CAMPBELL & COMPANY
CIVIL ENGINEER	SM ENGINEERING
GENERAL CONTRACTOR	BRINKMANN CONSTRUCTORS
MECHANICAL ENGINEER	LATIMER SOMMERS & ASSOCIATES
PLUMBING ENGINEER	LATIMER SOMMERS & ASSOCIATES
ELECTRICAL ENGINEER	LATIMER SOMMERS & ASSOCIATES

Tegethoff DEVELOPMENT

The Signature at West Pryor

2100 NW LOWENSTEIN DR.
LEE'S SUMMIT, MISSOURI 64081

TR,i ARCHITECTS

TR,i Architects
1790 S. Brentwood Blvd.
St. Louis, Missouri 63144
T: 314-395-9750
www.triarchitects.com
© Copyright 2021

DATE: 7.15.2021

REVISIONS 4

1	PERMIT COMMENTS	8.17.2021
5	Revision 3	5.12.2022

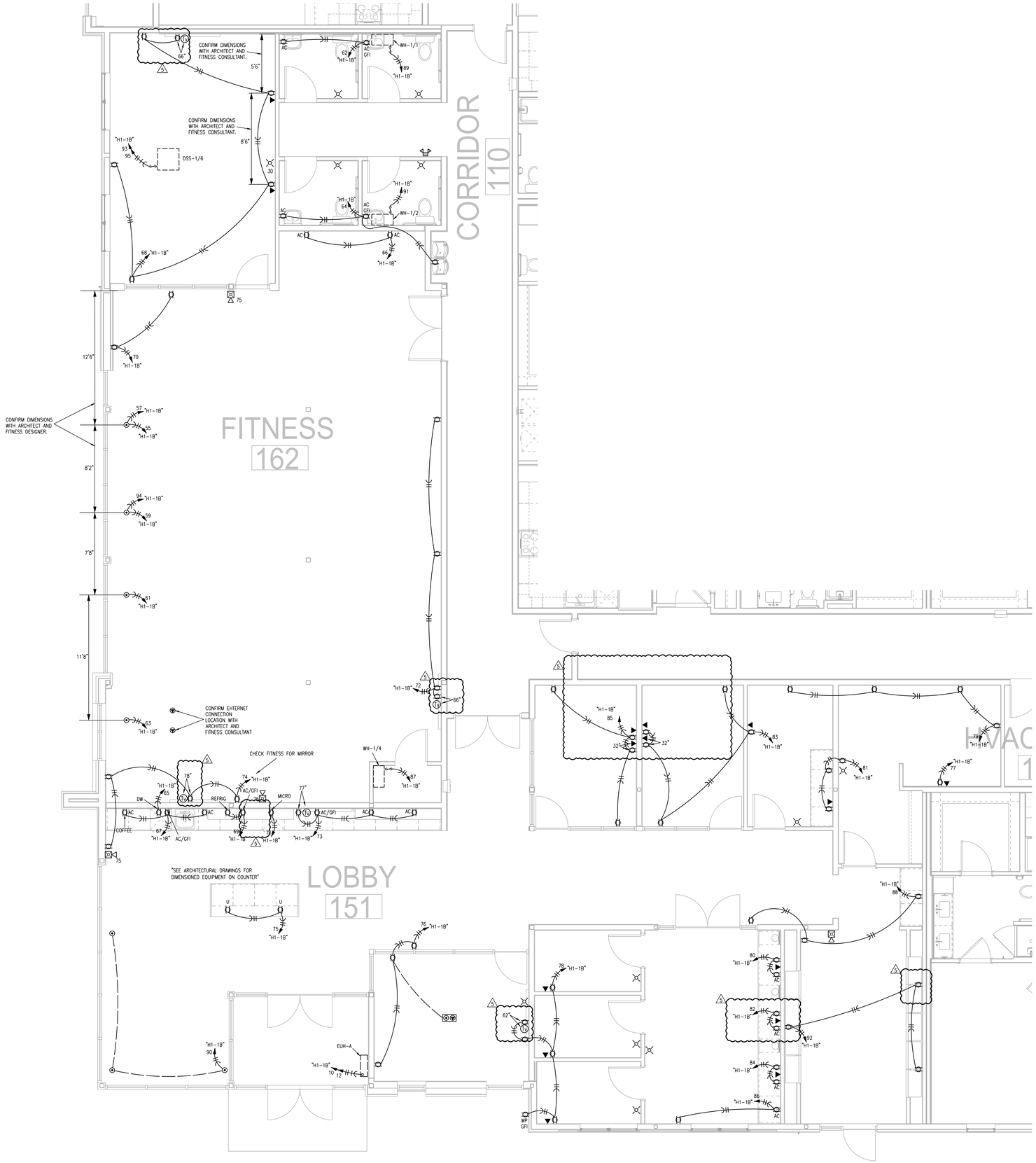
DWG BY CB

TR,i PROJECT NO. 20-001

SHEET NO.

S023

1 MAINTENANCE SHED/POOL HOUSE

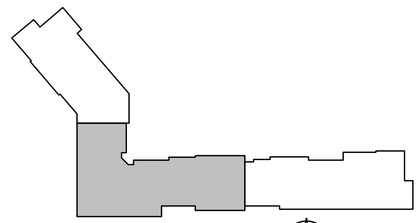


1 **BLDG 1-B, PARTIAL FIRST FLOOR PLAN**
1/4"=1'-0" POWER

NORTH

NOTES:
1. ALL STAIR LIGHTS ARE TYPE "A2" UNLESS NOTED OTHERWISE.
2. ALL ⓥ ARE TYPE "X1" UNLESS NOTED OTHERWISE.
3. ALL ⓥ ARE TYPE "X2" UNLESS NOTED OTHERWISE.
4. ALL ⓥ ARE TYPE "X5" UNLESS NOTED OTHERWISE.
5. CONNECT FIRE/SMOKE DAMPERS SHOWN ON MECHANICAL PLANS TO 120V. AND FIRE ALARM RELAY TO SHUT UPON SMOKE DETECTION IN CORRIDORS.
6. SEE UNIT PLANS FOR FURTHER WORK.
7. LIGHTS AT APT. ENTRY DOORS CONNECT TO APT. HOT CIRCUIT.
8. ALL AHU'S HAVE AUTO DAMPER/THERMOSTAT SYSTEM TO WIRE. SEE HVAC PLANS.
9. EXIT SIGNS SHALL BE READILY VISIBLE TO OCCUPANTS.
10. SEE ARCH. REFLECTED CEILING PLANS FOR DIMENSIONS.
11. "DP-1" DENOTES DISTRIBUTION PANEL.

LEGEND:
(1) ROUTE CIRCUIT THRU PHOTOCELL.



KEY PLAN
NO SCALE

NORTH

LS&A
Lattimer Sommers & Associates, P.A.
CONSULTING ENGINEERS
3639 SW Summerfield Drive, Suite A
Topeka, Kansas 66614-3974
Telephone: (785) 233-3232
FAX: (785) 233-0647
Email: lsapa@lsapa.com
LSA PROJECT NO. 2104008

RELEASED FOR CONSTRUCTION
As Noted on Plans Review
Development Services Department
Lee's Summit, Missouri
05/23/2022

STATE OF MISSOURI
RICHARD R. BEARDMORE
NUMBER PE-2009018744
PROFESSIONAL ENGINEER
5-12-22

ARCHITECT
STRUCTURAL ENGINEER
CIVIL ENGINEER
GENERAL CONTRACTOR
MECHANICAL ENGINEER
PLUMBING ENGINEER
ELECTRICAL ENGINEER

TR,i ARCHITECTS
STRUCTURAL
CIVIL
GENERAL CONTRACTOR
ENGINEER
PLUMBING
ELECTRICAL

Tegethoff DEVELOPMENT

The Signature at West Pryor

2100 NW LOWENSTEIN DR.
LEE'S SUMMIT, MISSOURI 64081

TR,i ARCHITECTS

TR,i Architects
1790 S. Brentwood Blvd.
St. Louis, Missouri 63144
T: 314-395-9750
www.triarchitects.com

© Copyright 2021

DATE: 7.15.2021

REVISIONS (2)

(1) REVISION 3	05-12-22

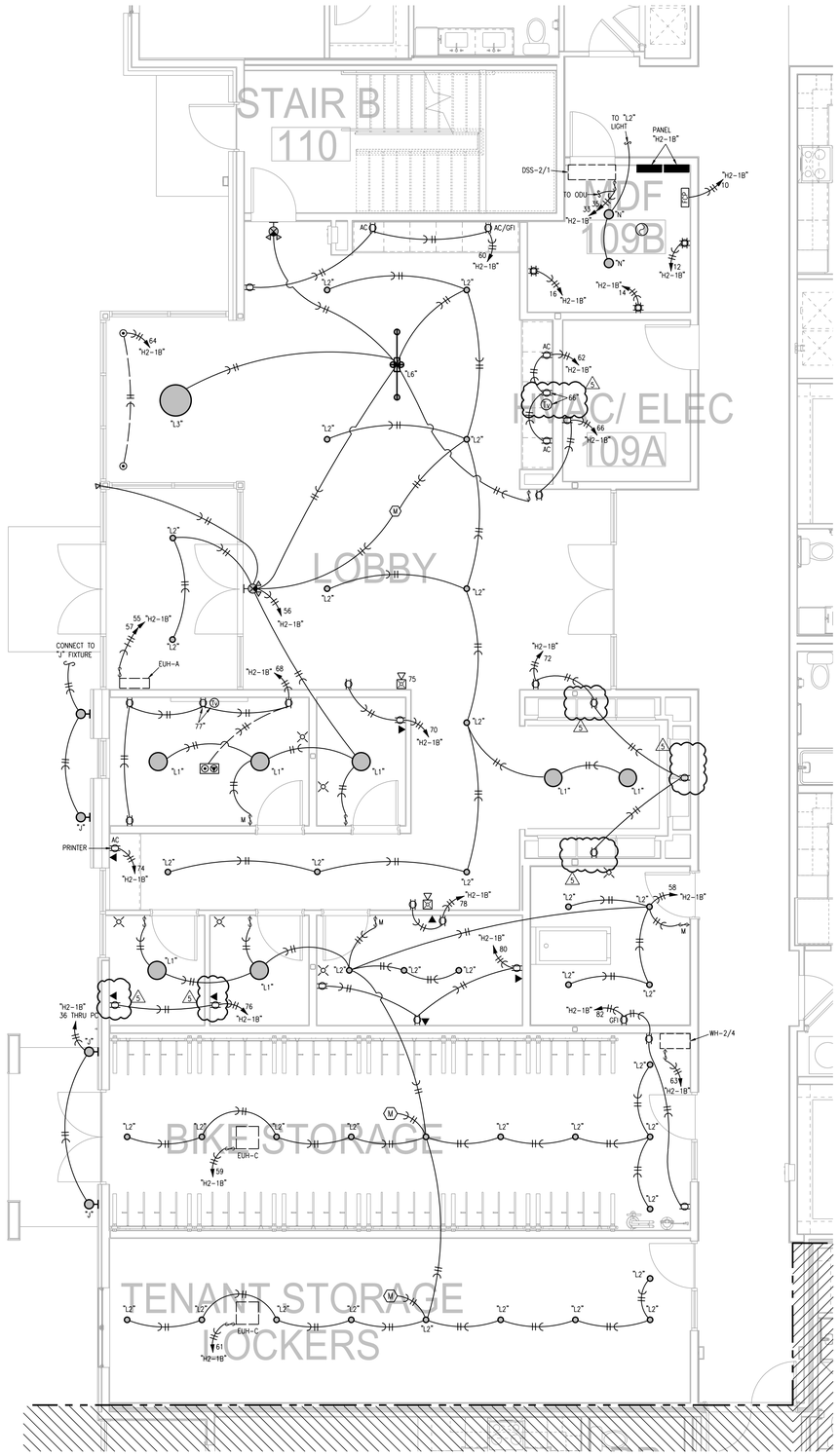
DWG BY CAD/RRB

TR,i PROJECT NO. 20-001

SHEET NO.

E102b

BLDG 1-B, PARTIAL FIRST FLOOR PLAN - ELECTRICAL

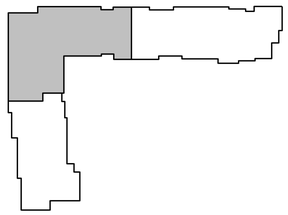


1 **BLDG 2-B, PARTIAL FIRST FLOOR PLAN** — ELECTRICAL
1/4"=1'-0"

NORTH

NOTES:
1. ALL ⊙ ARE TYPE "A2" UNLESS NOTED OTHERWISE.
2. ALL STAIR LIGHTS ARE TYPE "A" UNLESS NOTED OTHERWISE.
3. ALL ⊗ ARE TYPE "X1" UNLESS NOTED OTHERWISE.
4. ALL ⊗ ARE TYPE "X2" UNLESS NOTED OTHERWISE.
5. ALL ⊗ ARE TYPE "X5" UNLESS NOTED OTHERWISE.
6. ALL ▬ STAIR LIGHTS ARE TYPE "P" U.N.O.
7. CONNECT FIRE/SMOKE DAMPERS SHOWN ON MECHANICAL PLANS TO 120V. AND FIRE ALARM RELAY TO SHUT UPON SMOKE DETECTION IN CORRIDORS.
8. SEE UNIT PLANS FOR FURTHER WORK.
9. LIGHTS AT APT. ENTRY DOORS CONNECT TO APT. HOT CIRCUIT.
10. ALL AHU'S HAVE AUTO DAMPER/THERMOSTAT SYSTEM TO WIRE. SEE HVAC PLANS.
11. EXIT SIGNS SHALL BE READILY VISIBLE TO OCCUPANTS.
12. EXTERIOR LIGHTING TO BE ROUTED THRU PHOTOCELL.
13. "DP-1" DENOTES DISTRIBUTION PANEL.

LEGEND:
(1) TO LIGHTING CONTROL PANEL.



KEY PLAN
NO SCALE

NORTH

LS&A
Latimer Sommers & Associates, P.A.
CONSULTING ENGINEERS
3639 SW Summerfield Drive, Suite A
Topeka, Kansas 66614-3974
Telephone: (785) 233-3232
FAX: (785) 233-0647
Email: lsapa@lsapa.com
LSA PROJECT NO. 2104008

RELEASED FOR CONSTRUCTION
As Noted on Plans Review
Development Services Department
Lee's Summit, Missouri
05/23/2022

STATE OF MISSOURI
RICHARD R. BEARDMORE
PROFESSIONAL ENGINEER
5-12-22

ARCHITECT
STRUCTURAL ENGINEER
CIVIL ENGINEER
GENERAL CONTRACTOR
MECHANICAL ENGINEER
PLUMBING ENGINEER
ELECTRICAL ENGINEER

TR.i ARCHITECTS
STRUCTURAL
CIVIL
GENERAL CONTRACTOR
ENGINEER
PLUMBING
ELECTRICAL

Tegethoff DEVELOPMENT

The Signature at West Pryor

2100 NW LOWENSTEIN DR.
LEE'S SUMMIT, MISSOURI 64081

TRi ARCHITECTS

TRi Architects
1790 S. Brentwood Blvd.
St. Louis, Missouri 63144
T: 314-395-9750
www.triarchitects.com

© Copyright 2021

DATE: 7.15.2021

REVISIONS

1 PERMIT REVIEW COMMENTS	08-17-21
2 RFI	02-02-22
1 REVISION 1	02-11-22
3 REVISION 3	05-12-22

DWG BY CAD/RRB

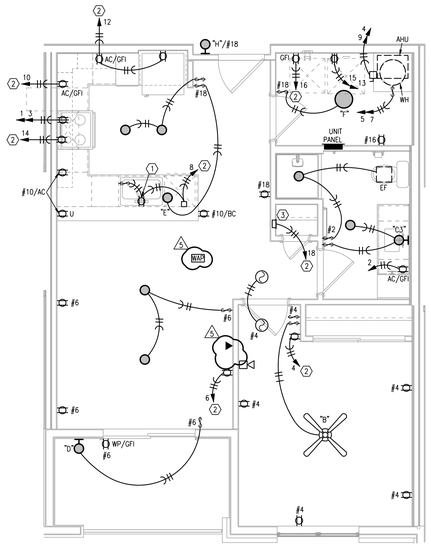
TR.i PROJECT NO. 20-001

SHEET NO.
E114a

BLDG 2-B, PARTIAL FIRST FLOOR PLAN - ELECTRICAL

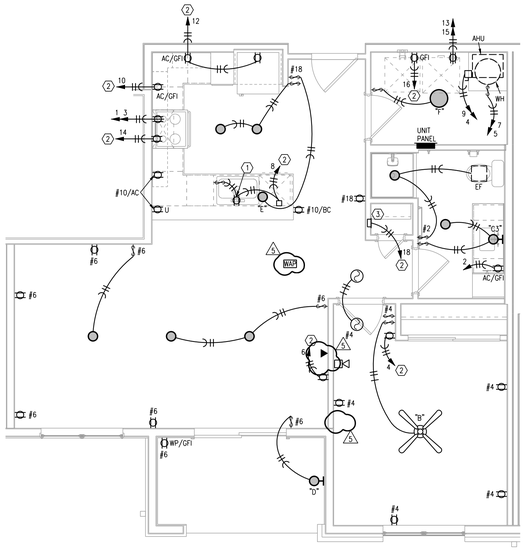
RELEASED FOR CONSTRUCTION
As Noted on Plans Review
Development Services Department
Lee's Summit, Missouri
05/23/2022

NOTES:
SEE INTERIORS CEILING PLANS FOR LIGHTING PLACEMENT.



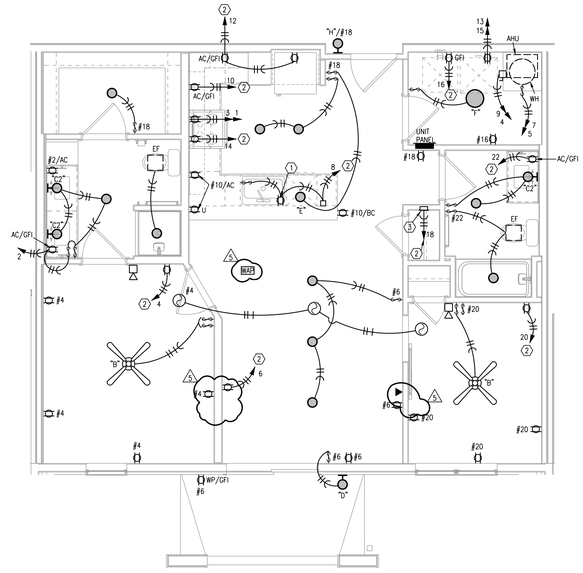
1 TYPICAL UNIT PLAN - A1

1/4"=1'-0" (UNITS A1-1, A1-2 SIMILAR) ELECTRICAL



2 TYPICAL UNIT PLAN - A2

1/4"=1'-0" ELECTRICAL

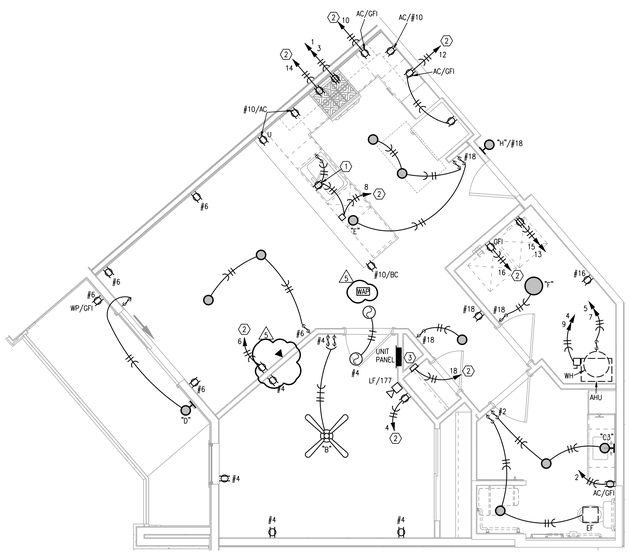


3 TYPICAL UNIT PLAN - A3

1/4"=1'-0" ELECTRICAL

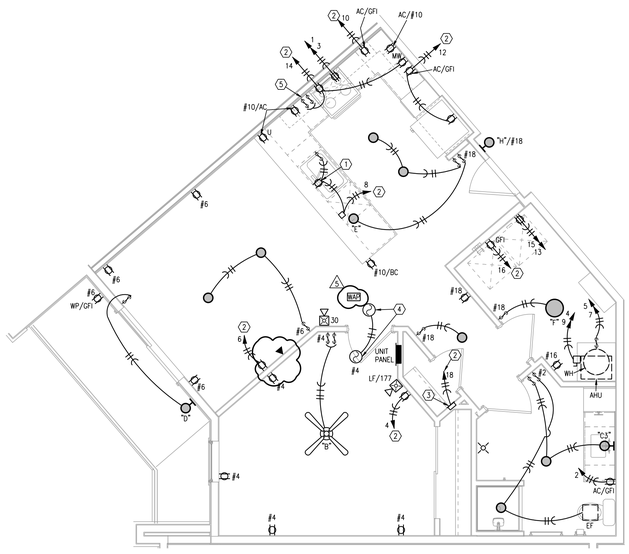
NOTES:
1. ENTRY FIXTURE IN HALLWAYS ARE WIRED TO UNIT CIRCUIT. MOUNT AT 72"AFF, VERIFY WITH ARCHITECT.
2. CEILING FAN SWITCHES PROVIDED WITH FAN. CONTROL LIGHT AND FAN SEPARATELY. INTENDED FOR SINGLE GANG BOX.
3. CENTER ISLAND/PENINSULA PENDANT LIGHTS OVER BASE BACK WALL AND CENTERED EQUALLY LEFT TO RIGHT OVER SINK. THESE ARE SEPARATELY SWITCHED.
4. GENERALLY CENTER LIGHT ON WINDOWS, DOOR, HALLWAYS, SINKS, OVER TUBS, ETC. VERIFY ALL LOCATIONS IN EACH UNIT DIMENSIONALLY WITH ARCHITECT, INTERIOR DESIGNER AND OWNER. MOUNT SWITCHES CLOSE TO DOORS OR WALL CORNERS.
5. THERMOSTATS HAVE LOW VOLTAGE WIRE BACK TO AHU. CONDENSING UNITS HAVE LOW VOLTAGE WIRE BACK TO AHU.
6. (S) = 120V. SMOKE ALARM WITH BATTERY BACK-UP AND AUXILIARY CONTACT SO ALL SOUND TOGETHER.
7. ALL ARC-FAULT CIRCUIT BREAKERS SHALL BE COMPATIBLE WITH CEILING FANS, COMPACT AND STANDARD FLUORESCENT LAMPS/FIXTURES AND OTHER ELECTRONIC DEVICES.
8. PROVIDE PROTECTION AT ELECTRICAL BOXES AT RATED CEILING MEMBRANES PER IBC 712.4.1.2(2). BOXES TO BE LISTED FOR RATED MEMBRANES, NOT EXCEED 16 SQUARE INCHES, NOT COMBINE FOR MORE THAN 100 SQUARE INCHES IN 100 SQUARE FEET AND ANNULAR SPACE NOT EXCEED 1/8".
9. FIRE ALARM HORN/STROBE CIRCUITS SHALL BE SIZED TO ACCEPT BEDROOM HORN/STROBES IN FUTURE INCLUDING WIRING AND PANEL CAPACITY.
10. ALL RANGES SERVED BY (3) #8 & (1) #10 AND 50A. RECEPTACLE.
11. ALL WATER HEATERS SERVED BY (3) #10
12. ALL WASHERS AND REFRIGERATORS HAVE RECEPTACLES AT 48".
13. SEE HVAC SCHEDULE AND SHOP DRAWINGS FOR AHU AND HEAT PUMP CIRCUITS.
14. ALL DRYERS SERVED BY (4) #10 AND 30A. RECEPTACLE.
15. BELOW COUNTER RECEPTACLES AND PLATES SHALL MATCH THE BASE CABINETS WHERE THEY ARE MOUNTED (BROWN, WHITE, ETC.) VERIFY WITH ARCHITECT.
16. EXTERIOR RECEPTACLES SHALL BE ARLINGTON #DBVM1C RECESSED TYPE.
17. SEE ARCHITECTURAL REFLECTED CEILING PLANS FOR DIMENSIONS & SCHEDULE.
18. MOUNT TOP BREAKER IN UNIT PANELS AT 48".

LEGEND:
(1) SWITCHED GFI RECEPTACLE FOR GARBAGE DISPOSER CONTINUE CIRCUIT TO DISHWASHER.
(2) PROVIDE ARC-FAULT CIRCUIT BREAKER IN PANEL.
(3) TELE/TV DEMARK FLUSH BOX. PROVIDE WITH DUPLEX OUTLET. PROVIDE 1" CONDUIT FROM BOX TO ABOVE CEILING AND OUT TO CEILING IN THE HALLWAY. SEE DETAILS.
(4) SMOKE ALARM TO HAVE STROBES.
(5) CONNECT RANGE HOOD TO TWO SWITCHES ABOVE COUNTER TO CONTROL LIGHT AND FAN.



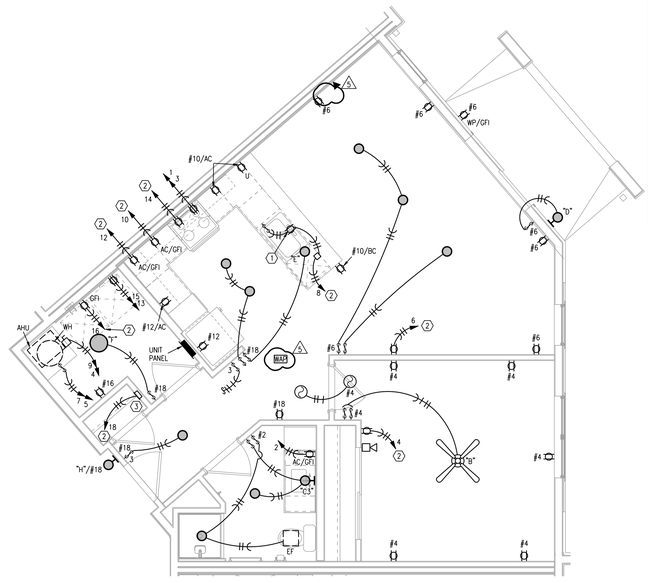
4 TYPICAL UNIT PLAN - A4

1/4"=1'-0" ELECTRICAL



5 TYPICAL UNIT PLAN - A4 TYPE A

1/4"=1'-0" ELECTRICAL



6 TYPICAL UNIT PLAN - A5

1/4"=1'-0" ELECTRICAL

ELECTRICAL SYMBOLS LEGEND;
DUPLEX RECEPTACLE.
120/240V. RECEPTACLE. 30A. FOR DRYER, 50A. FOR RANGE.
SW RECEPTACLE HALF SWITCHED.
U USB CHARGING COMB. RECEPTACLE.
DATA OUTLET.
TV COMBINATION CATV/DATA OUTLET.
AC ABOVE COUNTER
BC BELOW COUNTER
LOW FREQUENCY HORN
TYPE "A" FIXTURE

LS&A
Latimer Sommers & Associates, P.A.
CONSULTING ENGINEERS
3639 SW Summerfield Drive, Suite A
Topeka, Kansas 66614-3974
Telephone: (785) 233-3232
FAX: (785) 233-0647
Email: lsapa@lsapa.com
LSA PROJECT NO. 2104008

STATE OF MISSOURI
RICHARD R. BEAREMORE
NUMBER 2010019744
PROFESSIONAL ENGINEER
5-12-22

ARCHITECT
STRUCTURAL ENGINEER
CIVIL ENGINEER
GENERAL CONTRACTOR
MECHANICAL ENGINEER
PLUMBING ENGINEER
ELECTRICAL ENGINEER

TR.i ARCHITECTS
STRUCTURAL
CIVIL
GENERAL CONTRACTOR
ENGINEER
PLUMBING
ELECTRICAL

Tegethoff DEVELOPMENT

The Signature at West Pryor

2100 NW LOWENSTEIN DR.
LEE'S SUMMIT, MISSOURI 64081

TR.i ARCHITECTS

TR.i Architects
1790 S. Brentwood Blvd.
St. Louis, Missouri 63144
T: 314-395-9750
www.triarchitects.com

© Copyright 2021

DATE: 7.15.2021

REVISIONS

1 REVISION 1	02-11-22
3 REVISION 3	05-12-22

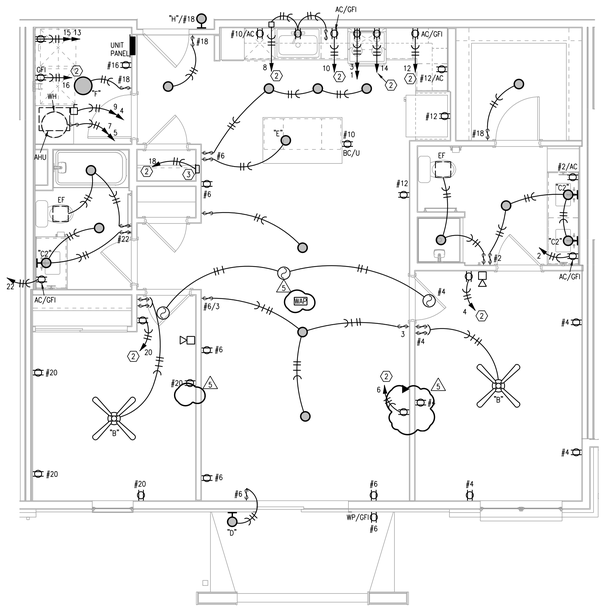
DWG BY CAD/RRB

TR.i PROJECT NO. 20-001

SHEET NO.

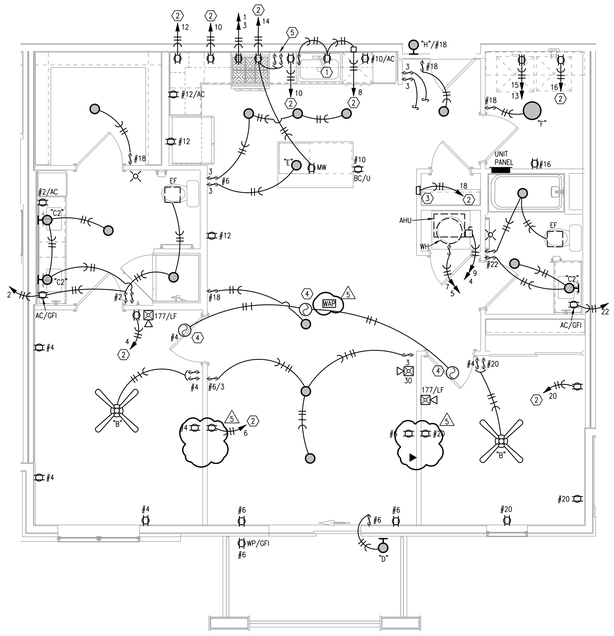
E201

TYPICAL UNIT PLANS - ELECTRICAL



1 TYPICAL UNIT PLAN - B1

1/4"=1'-0" (UNITS B1-1, B1-2, B1-3 SIMILAR) ELECTRICAL



2 TYPICAL UNIT PLAN - B1 TYPE A

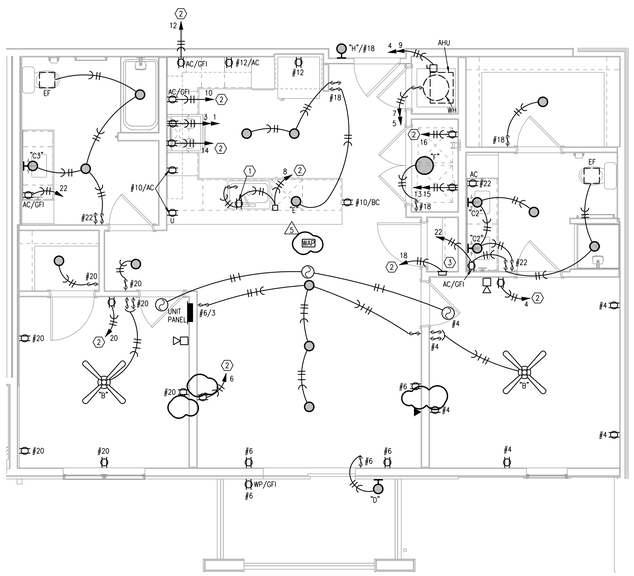
1/4"=1'-0" ELECTRICAL

LEGEND:
(1) SWITCHED GFI RECEPTACLE FOR GARBAGE DISPOSER CONTINUE CIRCUIT TO DISHWASHER.
(2) PROVIDE ARC-FAULT CIRCUIT BREAKER IN PANEL.
(3) TELE/TV DEMARK FLUSH BOX. PROVIDE WITH DUPLEX OUTLET. PROVIDE 1" CONDUIT FROM BOX TO ABOVE CEILING AND OUT TO CEILING IN THE HALLWAY. SEE DETAILS.
(4) SMOKE ALARM TO HAVE STROBES.
(5) CONNECT RANGE HOOD TO TWO SWITCHES ABOVE COUNTER TO CONTROL LIGHT AND FAN.

ELECTRICAL SYMBOLS LEGEND;
DUPLEX RECEPTACLE.
120/240V. RECEPTACLE. 30A. FOR DRYER, 50A. FOR RANGE.
RECEPTACLE HALF SWITCHED.
USB CHARGING COMB. RECEPTACLE.
DATA OUTLET.
COMBINATION CATV/DATA OUTLET.
AC ABOVE COUNTER
BC BELOW COUNTER
LOW FREQUENCY HORN
TYPE "A" FIXTURE

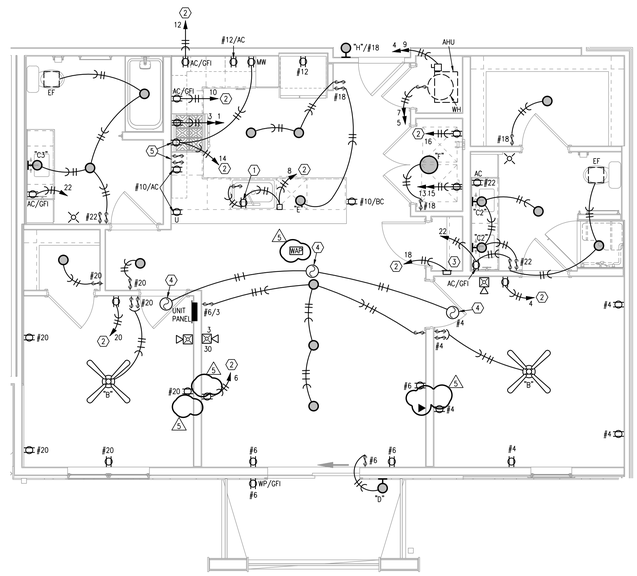
NOTES:
1. ENTRY FIXTURE IN HALLWAYS ARE WIRED TO UNIT CIRCUIT. MOUNT AT 72"AFF, VERIFY WITH ARCHITECT.
2. CEILING FAN SWITCHES PROVIDED WITH FAN. CONTROL LIGHT AND FAN SEPARATELY. INTENDED FOR SINGLE GANG BOX.
3. CENTER ISLAND/PENINSULA PENDANT LIGHTS OVER BASE BACK WALL AND CENTERED EQUALLY LEFT TO RIGHT OVER SINK. THESE ARE SEPARATELY SWITCHED.
4. GENERALLY CENTER LIGHT ON WINDOWS, DOOR, HALLWAYS, SINKS, OVER TUBS, ETC. VERIFY ALL LOCATIONS IN EACH UNIT DIMENSIONALLY WITH ARCHITECT, INTERIOR DESIGNER AND OWNER. MOUNT SWITCHES CLOSE TO DOORS OR WALL CORNERS.
5. THERMOSTATS HAVE LOW VOLTAGE WIRE BACK TO AHU. CONDENSING UNITS HAVE LOW VOLTAGE WIRE BACK TO AHU.
6. (CO) = 120V. SMOKE ALARM WITH BATTERY BACK-UP AND AUXILIARY CONTACT SO ALL SOUND TOGETHER.
7. ALL ARC-FAULT CIRCUIT BREAKERS SHALL BE COMPATIBLE WITH CEILING FANS, COMPACT AND STANDARD FLUORESCENT LAMPS/FIXTURES AND OTHER ELECTRONIC DEVICES.
8. PROVIDE PROTECTION AT ELECTRICAL BOXES AT RATED CEILING MEMBRANES PER IBC 712.4.1.2(2). BOXES TO BE LISTED FOR RATED MEMBRANES, NOT EXCEED 16 SQUARE INCHES, NOT COMBINE FOR MORE THAN 100 SQUARE INCHES IN 100 SQUARE FEET AND ANNULAR SPACE NOT EXCEED 1/8".
9. FIRE ALARM HORN/STROBE CIRCUITS SHALL BE SIZED TO ACCEPT BEDROOM HORN/STROBES IN FUTURE INCLUDING WIRING AND PANEL CAPACITY.
10. ALL RANGES SERVED BY (3) #8 & (1) #10 AND 50A. RECEPTACLE.
11. ALL WATER HEATERS SERVED BY (3) #10
12. ALL WASHERS AND REFRIGERATORS HAVE RECEPTACLES AT 48".
13. SEE HVAC SCHEDULE AND SHOP DRAWINGS FOR AHU AND HEAT PUMP CIRCUITS.
14. ALL DRYERS SERVED BY (4) #10 AND 30A. RECEPTACLE.
15. BELOW COUNTER RECEPTACLES AND PLATES SHALL MATCH THE BASE CABINETS WHERE THEY ARE MOUNTED (BROWN, WHITE, ETC.) VERIFY WITH ARCHITECT.
16. EXTERIOR RECEPTACLES SHALL BE ARLINGTON #DBVM1C RECESSED TYPE.
17. SEE ARCHITECTURAL REFLECTED CEILING PLANS FOR DIMENSIONS & SCHEDULE.
18. MOUNT TOP BREAKER IN UNIT PANELS AT 48".

NOTES:
SEE INTERIORS CEILING PLANS FOR LIGHTING PLACEMENT.



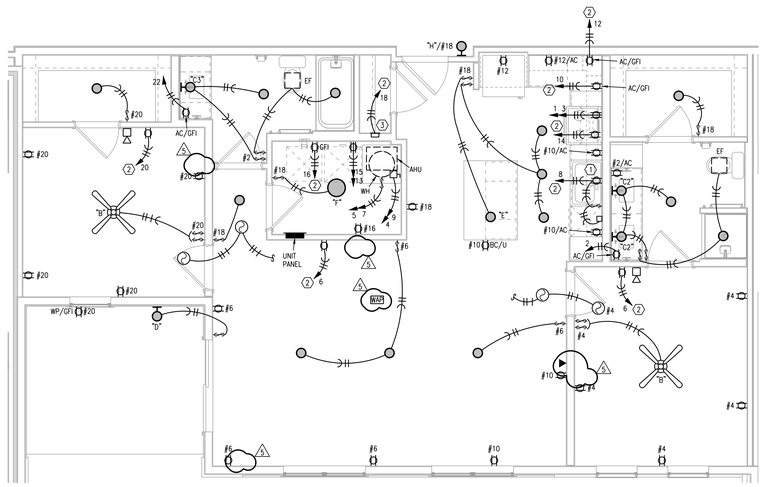
3 TYPICAL UNIT PLAN - B2

1/4"=1'-0" ELECTRICAL



4 TYPICAL UNIT PLAN - B2 TYPE A

1/4"=1'-0" ELECTRICAL



5 TYPICAL UNIT PLAN - B3

1/4"=1'-0" (UNIT B3-1 SIMILAR) ELECTRICAL

LS&A
Lalimer Sommers & Associates, P.A.
CONSULTING ENGINEERS
3639 SW Summerfield Drive, Suite A
Topeka, Kansas 66614-3974
Telephone: (785) 233-3232
FAX: (785) 233-0647
Email: lsapa@lsapa.com
LSA PROJECT NO. 2104008

RELEASED FOR CONSTRUCTION
As Noted on Plans Review
Development Services Department
Lee's Summit, Missouri
05/23/2022

STATE OF MISSOURI
RICHARD R. BEARDMORE
NUMBER PE-2010018744
PROFESSIONAL ENGINEER
5-12-22

ARCHITECT
STRUCTURAL ENGINEER
CIVIL ENGINEER
GENERAL CONTRACTOR
MECHANICAL ENGINEER
PLUMBING ENGINEER
ELECTRICAL ENGINEER

TR,i ARCHITECTS
STRUCTURAL
CIVIL
GENERAL CONTRACTOR
ENGINEER
PLUMBING
ELECTRICAL

Tegethoff DEVELOPMENT

The Signature at West Pryor

2100 NW LOWENSTEIN DR.
LEE'S SUMMIT, MISSOURI 64081

TRi ARCHITECTS

TRi Architects
1700 S. Brentwood Blvd.
St. Louis, Missouri 63144
© Copyright 2021
T: 314-395-9750
www.triarchitects.com

DATE: 7.15.2021

REVISIONS (4)

1 PERMIT REVIEW COMMENTS	08-17-21
1 REVISION 1	02-11-22
2 REVISION 2	03-01-22
3 REVISION 3	05-12-22

DWG BY CAD/RRB

TR,i PROJECT NO. 20-001

SHEET NO.

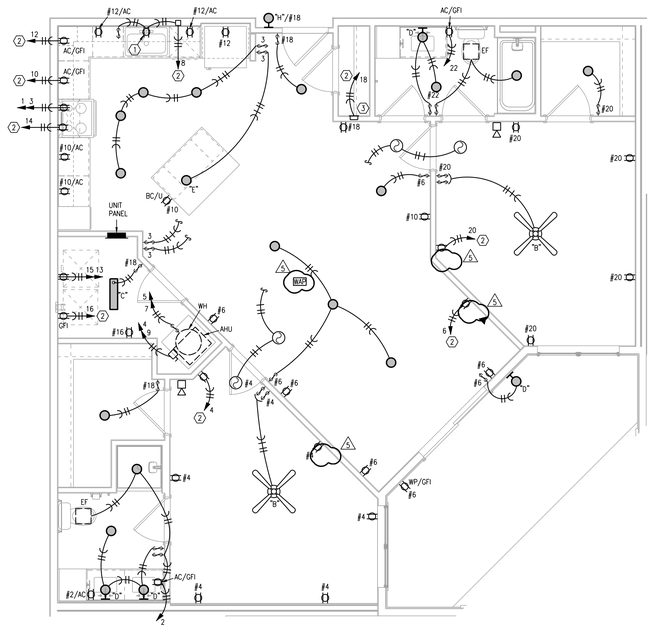
E202

TYPICAL UNIT PLANS - ELECTRICAL

RELEASED FOR CONSTRUCTION
As Noted on Plans Review
Development Services Department
Lee's Summit, Missouri
05/23/2022

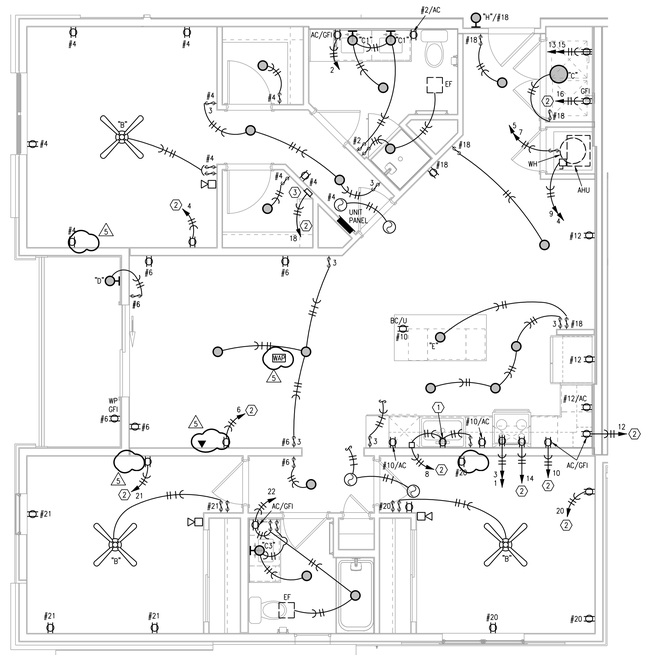
NOTES:

SEE INTERIORS CEILING PLANS FOR LIGHTING PLACEMENT.



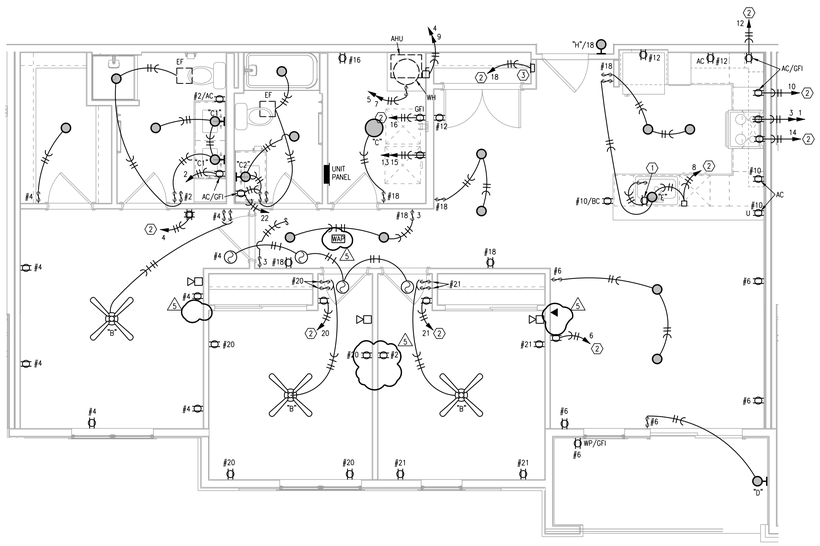
1 TYPICAL UNIT PLAN - B4

1/4"=1'-0" ELECTRICAL



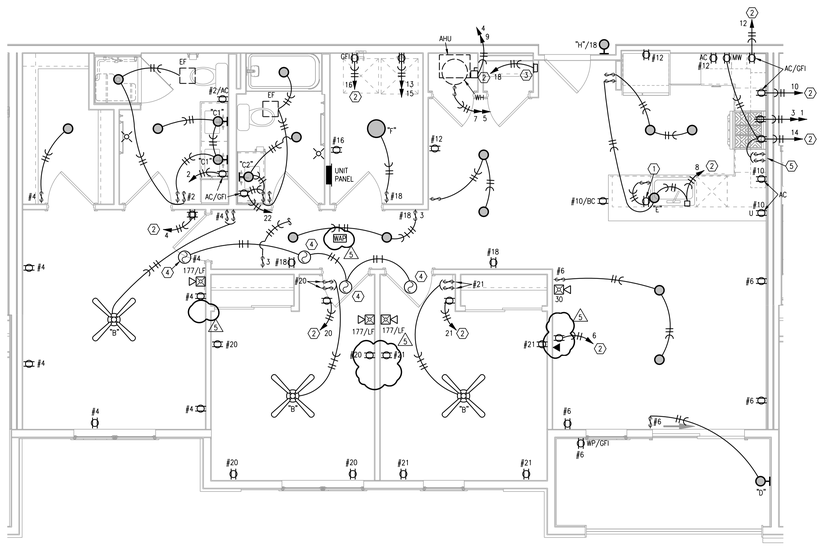
2 TYPICAL UNIT PLAN - C1

1/4"=1'-0" (UNIT C1-1 SIMILAR) ELECTRICAL



3 TYPICAL UNIT PLAN - C2

1/4"=1'-0" (UNIT C2-1 SIMILAR) ELECTRICAL



4 TYPICAL UNIT PLAN - C2 TYPE A

1/4"=1'-0" ELECTRICAL

NOTES:

1. ENTRY FIXTURE IN HALLWAYS ARE WIRED TO UNIT CIRCUIT. MOUNT AT 72"AFF, VERIFY WITH ARCHITECT.
2. CEILING FAN SWITCHES PROVIDED WITH FAN. CONTROL LIGHT AND FAN SEPARATELY. INTENDED FOR SINGLE GANG BOX.
3. CENTER ISLAND/PENINSULA PENDANT LIGHTS OVER BASE BACK WALL AND CENTERED EQUALLY LEFT TO RIGHT OVER SINK. THESE ARE SEPARATELY SWITCHED.
4. GENERALLY CENTER LIGHT ON WINDOWS, DOOR, HALLWAYS, SINKS, OVER TUBS, ETC. VERIFY ALL LOCATIONS IN EACH UNIT DIMENSIONALLY WITH ARCHITECT, INTERIOR DESIGNER AND OWNER. MOUNT SWITCHES CLOSE TO DOORS OR WALL CORNERS.
5. THERMOSTATS HAVE LOW VOLTAGE WIRE BACK TO AHU. CONDENSING UNITS HAVE LOW VOLTAGE WIRE BACK TO AHU.
6. (S) = 120V. SMOKE ALARM WITH BATTERY BACK-UP AND AUXILIARY CONTACT SO ALL SOUND TOGETHER.
7. ALL ARC-FAULT CIRCUIT BREAKERS SHALL BE COMPATIBLE WITH CEILING FANS, COMPACT AND STANDARD FLUORESCENT LAMPS/FIXTURES AND OTHER ELECTRONIC DEVICES.
8. PROVIDE PROTECTION AT ELECTRICAL BOXES AT RATED CEILING MEMBRANES PER IBC 712.4.1.2(2). BOXES TO BE LISTED FOR RATED MEMBRANES, NOT EXCEED 16 SQUARE INCHES, NOT COMBINE FOR MORE THAN 100 SQUARE INCHES IN 100 SQUARE FEET AND ANNULAR SPACE NOT EXCEED 1/8".
9. FIRE ALARM HORN/STROBE CIRCUITS SHALL BE SIZED TO ACCEPT BEDROOM HORN/STROBES IN FUTURE INCLUDING WIRING AND PANEL CAPACITY.
10. ALL RANGES SERVED BY (3) #8 & (1) #10 AND 50A. RECEPTACLE.
11. ALL WATER HEATERS SERVED BY (3) #10
12. ALL WASHERS AND REFRIGERATORS HAVE RECEPTACLES AT 48".
13. SEE HVAC SCHEDULE AND SHOP DRAWINGS FOR AHU AND HEAT PUMP CIRCUITS.
14. ALL DRYERS SERVED BY (4) #10 AND 30A. RECEPTACLE.
15. BELOW COUNTER RECEPTACLES AND PLATES SHALL MATCH THE BASE CABINETS WHERE THEY ARE MOUNTED (BROWN, WHITE, ETC.) VERIFY WITH ARCHITECT.
16. EXTERIOR RECEPTACLES SHALL BE ARLINGTON #DBVM1C RECESSED TYPE.
17. SEE ARCHITECTURAL REFLECTED CEILING PLANS FOR DIMENSIONS & SCHEDULE.
18. MOUNT TOP BREAKER IN UNIT PANELS AT 48".

LEGEND:

1. SWITCHED GFI RECEPTACLE FOR GARBAGE DISPOSER CONTINUE CIRCUIT TO DISHWASHER.
2. PROVIDE ARC-FAULT CIRCUIT BREAKER IN PANEL.
3. TELE/TV DEMARK FLUSH BOX. PROVIDE WITH DUPLEX OUTLET. PROVIDE 1" CONDUIT FROM BOX TO ABOVE CEILING AND OUT TO CEILING IN THE HALLWAY. SEE DETAILS.
4. SMOKE ALARM TO HAVE STROBES.
5. CONNECT RANGE HOOD TO TWO SWITCHES ABOVE COUNTER TO CONTROL LIGHT AND FAN.

ELECTRICAL SYMBOLS LEGEND;

- DUPLEX RECEPTACLE.
- 120/240V. RECEPTACLE. 30A. FOR DRYER, 50A. FOR RANGE.
- RECEPTACLE HALF SWITCHED.
- USB CHARGING COMB. RECEPTACLE.
- DATA OUTLET.
- COMBINATION CATV/DATA OUTLET.
- AC ABOVE COUNTER
- BC BELOW COUNTER
- LOW FREQUENCY HORN
- TYPE "A" FIXTURE

STATE OF MISSOURI
RICHARD R. BEARDMORE
NUMBER
PROFESSIONAL ENGINEER
5-12-22

ARCHITECT
STRUCTURAL ENGINEER
CIVIL ENGINEER
GENERAL CONTRACTOR
MECHANICAL ENGINEER
PLUMBING ENGINEER
ELECTRICAL ENGINEER

TRi ARCHITECTS
STRUCTURAL
CIVIL
GENERAL CONTRACTOR
ENGINEER
PLUMBING
ELECTRICAL

Tegethoff DEVELOPMENT

The Signature at West Pryor

2100 NW LOWENSTEIN DR.
LEE'S SUMMIT, MISSOURI 64081

TRi ARCHITECTS

TRi Architects
1790 S. Brentwood Blvd.
St. Louis, Missouri 63144
T: 314-395-9750
www.triarchitects.com

© Copyright 2021

DATE: 7.15.2021

REVISIONS

1 REVISION 1	02-11-22
3 REVISION 3	05-12-22

DWG BY CAD/RRB

TRi PROJECT NO. 20-001

SHEET NO.

E203

TYPICAL UNIT PLANS - ELECTRICAL

LS&A
Latimer Sommers & Associates, P.A.
CONSULTING ENGINEERS
3639 SW Summerfield Drive, Suite A
Topeka, Kansas 66614-3974
Telephone: (785) 233-3232
FAX: (785) 233-0647
Email: lsapa@lsapa.com
LSA PROJECT NO. 2104008

Multi-Family Building Load Analysis

Building: 1-1A, 1-1B

Unit Quantity	Unit Type	Connected Load - VA	Total KVA
15	A1	31460	471.9
5	A2, A4, A5	31870	159.4
0	A3	32170	0.0
24	B1, B2	33070	793.7
15	B3, B4	33025	495.4
7	C1	35600	249.2
3	C2	35240	105.7

Total Building KVA	2275.2
Total Units	69
Diversity per NEC Table 230.84	0.23
Diversified KVA	523.3
Amps @ 208 V Three Phase	1454
House Load - Amps	300
Total Demand - Amps	1754

Multi-Family Building Load Analysis

Building: 1-1A

Unit Quantity	Unit Type	Connected Load - VA	Total KVA
6	A1	31460	188.8
	A2, A4, A5	31870	0.0
	A3	32170	0.0
12	B1, B2	33070	396.8
6	B3, B4	33025	198.2
6	C1	35600	213.6
3	C2	35240	105.72

Total Building KVA	1103.1
Total Units	33
Diversity per NEC Table 230.84	0.31
Diversified KVA	342.0
Amps @ 208 V Three Phase	950
House Load - Amps	150
Total Demand - Amps	1100

Multi-Family Building Load Analysis

Building: 1-1B

Unit Quantity	Unit Type	Connected Load - VA	Total KVA
9	A1	31460	283.1
5	A2, A4, A5	31870	159.4
	A3	32170	0.0
12	B1, B2	33070	396.8
9	B3, B4	33025	297.2
1	C1	35600	35.6
	C2	35240	0.00

Total Building KVA	1172.2
Total Units	36
Diversity per NEC Table 230.84	0.30
Diversified KVA	351.6
Amps @ 208 V Three Phase	977
House Load - Amps	350
Total Demand - Amps	1327

Multi-Family Building Load Analysis

Building: 1-2

Unit Quantity	Unit Type	Connected Load - VA	Total KVA
18	A1	31460	566.3
6	A2, A4, A5	31870	191.2
	A3	32170	0.0
	B1, B2	33070	0.0
3	B3, B4	33025	99.1
6	C1	35600	213.6
	C2	35240	

Total Building KVA	1070.2
Total Units	33
Diversity per NEC Table 230.84	0.31
Diversified KVA	331.8
Amps @ 208 V Three Phase	922
House Load - Amps	150
Total Demand - Amps	1072

Multi-Family Building Load Analysis

Building: 2-1A, B

Unit Quantity	Unit Type	Connected Load - VA	Total KVA
9	A1	31460	283.1
0	A2, A4, A5	31870	0.0
0	A3	32170	0.0
22	B1, B2	33070	727.5
3	B3, B4	33025	99.1
9	C1	35600	320.4
6	C2	35240	211.4

Total Building KVA	1641.6
Total Units	49
Diversity per NEC Table 230.84	0.24
Diversified KVA	394.0
Amps @ 208 V Three Phase	1094
House Load - Amps	300
Total Demand - Amps	1394

Multi-Family Building Load Analysis

Building: 2-1A

Unit Quantity	Unit Type	Connected Load - VA	Total KVA
6	A1	31460	188.8
	A2, A4, A5	31870	0.0
	A3	32170	0.0
3	B1, B2	33070	99.2
	B3, B4	33025	0.0
6	C1	35600	213.6
6	C2	35240	211.4

Total Building KVA	713.0
Total Units	21
Diversity per NEC Table 230.84	0.37
Diversified KVA	263.8
Amps @ 208 V Three Phase	733
House Load - Amps	150
Total Demand - Amps	883

Multi-Family Building Load Analysis

Building: 2-1 B

Unit Quantity	Unit Type	Connected Load - VA	Total KVA
3	A1	31460	94.4
	A2, A4, A5	31870	0.0
	A3	32170	0.0
19	B1, B2	33070	628.3
3	B3, B4	33025	99.1
3	C1	35600	106.8
	C2	35240	

Total Building KVA	928.6
Total Units	28
Diversity per NEC Table 230.84	0.33
Diversified KVA	306.4
Amps @ 208 V Three Phase	851
House Load - Amps	300
Total Demand - Amps	1151

Multi-Family Building Load Analysis

Building: 2-2

Unit Quantity	Unit Type	Connected Load - VA	Total KVA
9	A1	31460	283.1
	A2, A4, A5	31870	0.0
3	A3	32170	96.5
15	B1, B2	33070	496.1
	B3, B4	33025	0.0
	C1	35600	0.0
6	C2	35240	211.4

Total Building KVA	1087.1
Total Units	33
Diversity per NEC Table 230.84	0.31
Diversified KVA	337.0
Amps @ 208 V Three Phase	936
House Load - Amps	150
Total Demand - Amps	1086

Unit Load Calculation

Unit: A1

630 square feet at 3 VA per sq. ft.			1890
2 small appliance circuits			3000
Range			8000
Microwave			1000
Washer			1500
Dryer			4400
Water Heater			4500
Dishwasher			740
Disposer			850
Total general load			25880
NEC 220-84 Calculation			
First 10 KVA at 100%			10000
Remainder at 40%			6352
Heater Load	5600	65%	3640
Total load			19992
Load for unit service Amp @	208 volt/1		96
Connected Load			31480

Unit Load Calculation

Unit: A2, A4, A5

760 square feet at 3 VA per sq. ft.			2280
2 small appliance circuits			3000
Range			8000
Microwave			1000
Washer			1500
Dryer			4400
Water Heater			4500
Dishwasher			740
Disposer			850
Total general load			26270
NEC 220-84 Calculation			
First 10 KVA at 100%			10000
Remainder at 40%			6508
Heater Load	5600	65%	3640
Total load			20148
Load for unit service Amp @	208 volt/1		97
Connected Load			31870

Unit Load Calculation

Unit: A3

860 square feet at 3 VA per sq. ft.			2580
2 small appliance circuits			3000
Range			8000
Microwave			1000
Washer			1500
Dryer			4400
Water Heater			4500
Dishwasher			740
Disposer			850
Total general load			26570
NEC 220-84 Calculation			
First 10 KVA at 100%			10000
Remainder at 40%			6628
Heater Load	5600	65%	3640
Total load			20268
Load for unit service Amp @	208 volt/1		97
Connected Load			32170

Unit Load Calculation

Unit: B1, B2

1160 square feet at 3 VA per sq. ft.			3480
2 small appliance circuits			3000
Range			8000
Microwave			1000
Washer			1500
Dryer			4400
Water Heater			4500
Dishwasher			740
Disposer			850
Total general load			27470
NEC 220-84 Calculation			
First 10 KVA at 100%			10000
Remainder at 40%			6988
Heater Load	5600	65%	3640
Total load			20628
Load for unit service Amp @	208 volt/1		99
Connected Load			33070

Unit Load Calculation

Unit: B3, B4

1145 square feet at 3 VA per sq. ft.			3435
2 small appliance circuits			3000
Range			8000
Microwave			1000
Washer			1500
Dryer			4400
Water Heater			4500
Dishwasher			740
Disposer			850
Total general load			27425
NEC 220-84 Calculation			
First 10 KVA at 100%			10000
Remainder at 40%			6970
Heater Load	5600	65%	3640
Total load			20610
Load for unit service Amp @	208 volt/1		99
Connected Load			33025

Unit Load Calculation

Unit: C1

1370 square feet at 3 VA per sq. ft.			4110
2 small appliance circuits			3000
Range			8000
Microwave			1000
Washer			1500
Dryer			4400
Water Heater			4500
Dishwasher			740
Disposer			850
Total general load			28100
NEC 220-84 Calculation			
First 10 KVA at 100%			10000
Remainder at 40%			7240
Heater Load	7500	65%	4875
Total load			22115
Load for unit service Amp @	208 volt/1		106
Connected Load			35600

Unit Load Calculation

Unit: C2

1250 square feet at 3 VA per sq. ft.			3750
2 small appliance circuits			3000
Range			8000
Microwave			1000
Washer			1500
Dryer			4400
Water Heater			4500
Dishwasher			740
Disposer			850
Total general load			27740
NEC 220-84 Calculation			
First 10 KVA at 100%			10000
Remainder at 40%			7096
Heater Load	7500	65%	4875
Total load			21971
Load for unit service Amp @	208 volt/1		106
Connected Load			35240

ELECTRICAL PANEL SCHEDULE

PANEL: A1, A2, A4 — POLES: 18 — MOUNTING: FLUSH

BUS: 125A — MAINS: MLO — VOLTAGE: 120/240 — PHASE/WIRE: 1 Ph 3 Wire — KAIC 10K

CIRCUIT NUMBERS	DESCRIPTION	AMPS	POLES	QUANTITY
1, 3	RANGE	40	2	1
5, 7, 13, 15	WATER HEATER, DRY ER	30	2	2
9, 11	AHU	40	2	1
17, 19	CONDENSING UNIT	20	2	1
2	LIGHTS AND RECEPTACLES	20	1	1
4 THRU 18 EVEN	ARC-FAULT LIGHTS AND RECEPTACLES	20	1	8
20	SPARE	20	1	1

ELECTRICAL PANEL SCHEDULE

PANEL: A3 — POLES: 24 — MOUNTING: FLUSH

BUS: 125A — MAINS: MLO — VOLTAGE: 120/240 — PHASE/WIRE: 1 Ph 3 Wire — KAIC 10K

CIRCUIT NUMBERS	DESCRIPTION	AMPS	POLES	QUANTITY
1, 3	RANGE	40	2	1
5, 7, 13, 15	WATER HEATER, DRY ER	30	2	2
9, 11	AHU	40	2	1
17, 19	CONDENSING UNIT	25	2	1
2, 22	LIGHTS AND RECEPTACLES	20	1	2
4 THRU 20 EVEN	ARC-FAULT LIGHTS AND RECEPTACLES	20	1	9
21	SPARE	20	1	1

ELECTRICAL PANEL SCHEDULE

PANEL: A5 — POLES: 24 — MOUNTING: FLUSH

BUS: 125A — MAINS: MLO — VOLTAGE: 120/240 — PHASE/WIRE: 1 Ph 3 Wire — KAIC 10K

CIRCUIT NUMBERS	DESCRIPTION	AMPS	POLES	QUANTITY
1, 3	RANGE	40	2	1
5, 7, 13, 15	WATER HEATER, DRY ER	30	2	2
9, 11	AHU	40	2	1
17, 19	CONDENSING UNIT	25	2	1
2	LIGHTS AND RECEPTACLES	20	1	1
4 THRU 18 EVEN	ARC-FAULT LIGHTS AND RECEPTACLES	20	1	8
21	SPARE	20	1	1

ELECTRICAL PANEL SCHEDULE

PANEL: ALL B UNITS — POLES: 24 — MOUNTING: FLUSH

BUS: 125A — MAINS: MLO — VOLTAGE: 120/240 — PHASE/WIRE: 1 Ph 3 Wire — KAIC 10K

CIRCUIT NUMBERS	DESCRIPTION	AMPS	POLES	QUANTITY
1, 3	RANGE	40	2	1
5, 7, 13, 15	WATER HEATER, DRY ER	30	2	2
9, 11	AHU	40	2	1
17, 19	CONDENSING UNIT	25	2	1
2, 22	LIGHTS AND RECEPTACLES	20	1	2
4 THRU 20 EVEN	ARC-FAULT LIGHTS AND RECEPTACLES	20	1	9
21	SPARE	20	1	1

ELECTRICAL PANEL SCHEDULE

PANEL: C1, C2 — POLES: 24 — MOUNTING: FLUSH

BUS: 125A — MAINS: MLO — VOLTAGE: 120/240 — PHASE/WIRE: 1 Ph 3 Wire — KAIC 10K

CIRCUIT NUMBERS	DESCRIPTION	AMPS	POLES	QUANTITY
1, 3	RANGE	40	2	1
5, 7, 13, 15	WATER HEATER, DRY ER	30	2	2
9, 11	AHU	60	2	1
17, 19	CONDENSING UNIT	30	2	1
2, 22	LIGHTS AND RECEPTACLES	20	1	2
4 THRU 20 EVEN, 21	ARC-FAULT LIGHTS AND RECEPTACLES	20	1	10
22	SPARE	20	1	1

Common Space Luminaire Schedule

MARK	DESCRIPTION	MFGR	MODEL	MOUNTING	FINISH	LAMPS	NOTES
A	DISK LIGHT	MAXIM	57690WTWT-CHIP 5"	recessed	white	12W LED	
A2	Stair Puck	Liton	LCMPD5R	jb/surface	white	ELV Dimming (120V)	
B	FAN/LIGHT	FANIMATION	FPS8533MW - KWARTET	surface	white		
C1	24" RAIL	MAXIM	52102	surface	satin nickel		
C2	30" RAIL	MAXIM	52103SN	surface	satin nickel		
C3	36" RAIL	MAXIM	52104	surface	satin nickel		
D	OUTDOOR SCONCE/PATIO	MAXIM	54350ABZ - Avenue	wall	bronze		
E	PENDANT	ET2	E20086-BK - ABYSS	pendant	black		
F	GLOBE	ACCESS LIGHTING	49960LEDD-WH/ACR - COMO	surface	white		
H	Entry Door Sconce	by others		wall			
J	Wall wash	Progress	P5630000-020-30K	wall	black	12W LED	
K	String Lights	Honeywell	48' LED Indoor/Outdoor Stringlight	surface		24W LED 1872 Lumens	
L	Strip	Lithonia	MNSL-L46 1LL MVOLT 40k	surface	white	20W 4000K LED	W/ BATTERY
L1	Decorative Globe 1	Matteo	X8311BKOP	surface			
L2	Disk 1	Maxim	57690 WTWT	recessed			
L3	Decorative Pendant 1	Maxim	COCOON 12190WTPC	pendant			
L4	Linear 1	Access Lighting	24891LEDD-MWH/ACR	surface			
L5	Sconce	Matteo	W83010BKOP 40" AFF	wall			
L6	Linear 2	Matteo	C81704BKOP	surface			
L7	Decorative Globe 1	Matteo	C8311BKOP	surface			
L8	Disk 2	Matteo	C79611AL	recessed			
M	NOT USED						
N	Closet disk with built in motion	Satco	62/1312	surface	white	16.5W LED 4000K 1050LM	
X1	Exit	Royal Pacific	RXL-5-RW	surface	white/red	1.5W LED	remote capable
X2	Exit w/heads	Royal Pacific	RXEL39 - RW	surface	white/red	1.5W LED	
X3	Remote Head	Lithonia	ELA-LED	surface	std	1W LED	
X4	Weatherproof Exit	Lithonia	WLTE W 1 R	surface	std	1W LED	
X5	Dual-Head Emergency	Lithonia	ELM4L	surface	std	640 lumen	

ELECTRICAL PANEL SCHEDULE

PANEL: M — LOCATION: — MOUNTING: SURFACE

BUS: 225 A — MAINS: MLO — VOLTAGE: 120/208 — PHASE/WIRE: 3/4 — KAIC: 10

DESCRIPTION	A (WATTS)	B (WATTS)	C (WATTS)	BRKR	WIRE	POLE	WIRE	BRKR	A (WATTS)	B (WATTS)	C (WATTS)	DESCRIPTION
DRYER	2200			30	8	1 2	12	20	50			LTG
		2200		2P	8	3 4	12	20		500		LTG
DRYER			2200	30	8	5 6	12	20				RECEPT
	2200			2P	8	7 8	12	20	500			WASHER
WH-M		2200		30	8	9 10	12	20		500		WASHER
			2200	2P	8	11 12	12	20			1000	RECEPT
EUH-D	1000			20	12	13 14	12	20	1000			RECEPT
EUH-D		1000		20	12	15 16	12	20		400		RECEPT
AHU-MAINT			5930	70	6	17 18	12	20			400	RECEPT
	5930			2P	6	19 20	12	20	400			RECEPT
CU-MAINT		2200		45	8	21 22	12	20		800		RECEPT
			2200	2P	8	23 24	12	20			400	RECEPT
EUH-B	4370			60	6	25 26	12	20	200			RECEPT
		4370		2P	6	27 28	12	20		400		RECEPT
RECEPT			400	20	12	29 30	12	20			400	RECEPT
SITE LIGHTING	800			20	10	31 32	12	20	500			MOTOR
IT		400		20	12	33 34	12	20		400		RECEPT
IT			400	20	12	35 36	12	20			400	RECEPT
RECEPT	200			20	12	37 38	12	20	400			RECEPT
RECEPT		200		20	12	39 40	12	20		400		RECEPT
RECEPT			200	20	12	41 42		20			400	RECEPT
DSS-IT	800			20	12	43 44						
		800		2P	12	45 46						
						47 48						
PANEL P	4000			100		49 50						
		1950				51 52						
			1750	3P		53 54						
CONNECTED LOAD-WATTS	24550	18720	18280						FEEDER LOAD-WATTS			
CONNECTED LOAD-AMPS	205	156	152						FEEDER LOAD-AMPS			
CONTINUOUS LOAD									FEEDER WIRE			
RECEPTACLES									FEEDER OCP			
NON-CONTINUOUS LOAD												
OTHER DIVERSIFIED LOAD				@	0.5							

ELECTRICAL PANEL SCHEDULE

PANEL: P — LOCATION: — MOUNTING: SURFACE

BUS: 100 A — MAINS: MLO — VOLTAGE: 120/208 — PHASE/WIRE: 3/4 — KAIC: 10

NEMA 3R

DESCRIPTION	A (WATTS)	B (WATTS)	C (WATTS)	BRKR	WIRE	POLE	WIRE	BRKR	A (WATTS)	B (WATTS)	C (WATTS)	DESCRIPTION
POOL STA RTER	1750			35	8	1 2	12	20	500			POOL HEATER
V ERIFY HP		1750		2P	8	3 4	12	20		200		RECEPT CALES
POOL STA RTER			1750	35	8	5 6						
V ERIFY HP	1750			2P	8	7 8						
						9 10						
						11 12						
						13 14						
						15 16						
						17 18						
						19 20						
						21 22						
						23 24						
CONNECTED LOAD-WATTS	4000	1950	1750						FEEDER LOAD-WATTS			
CONNECTED LOAD-AMPS	33	16	15						FEEDER LOAD-AMPS			
CONTINUOUS LOAD									FEEDER WIRE			
RECEPTACLES									FEEDER OCP			
NON-CONTINUOUS LOAD												
OTHER DIVERSIFIED LOAD				@	0.5							

RELEASED FOR CONSTRUCTION
As Noted on Plans Review
Development Services Department
Lee's Summit, Missouri
05/23/2022

STATE OF MISSOURI — RICHARD R. BEARDMORE — NUMBER 2010019744 — PROFESSIONAL ENGINEER
5-12-22

ARCHITECT
STRUCTURAL ENGINEER
CIVIL ENGINEER
GENERAL CONTRACTOR
MECHANICAL ENGINEER
PLUMBING ENGINEER
ELECTRICAL ENGINEER

TR,i ARCHITECTS
STRUCTURAL
CIVIL
GENERAL CONTRACTOR
ENGINEER
PLUMBING
ELECTRICAL

Tegethoff DEVELOPMENT

The Signature at West Pryor

2100 NW LOWENSTEIN DR.
LEE'S SUMMIT, MISSOURI 64081

TR,i ARCHITECTS

TR,i Architects
1700 S. Brentwood Blvd.
St. Louis, Missouri 63144
T: 314-395-9750
www.triarchitects.com

© Copyright 2021

DATE: 7.15.2021

REVISIONS 1

1 PERMIT REVIEW COMMENTS	08-17-21
2 FDP COMMENTS	09-28-21
1 REVISION 1	02-11-22
2 REVISION 2	03-01-22
3 REVISION 3	05-12-22

DWG BY CAD/RRB

TR,i PROJECT NO. 20-001

SHEET NO.

E305

ELECTRICAL SCHEDULES

LS&A Lattimer Sommers & Associates, P.A.
CONSULTING ENGINEERS
3639 SW Summerfield Drive, Suite A
Topeka, Kansas 66614-3974
Telephone: (785) 233-3232
FAX: (785) 233-0647
Email: lsapa@lsapa.com
LSA PROJECT NO. 2104008

RELEASED FOR CONSTRUCTION
As Noted on Plans Review
Development Services Department
Lee's Summit, Missouri
05/23/2022

STATE OF MISSOURI
RICHARD R. BEARDMORE
NUMBER 2010018744
PROFESSIONAL ENGINEER
5-12-22

ARCHITECT
STRUCTURAL ENGINEER
CIVIL ENGINEER
GENERAL CONTRACTOR
MECHANICAL ENGINEER
PLUMBING ENGINEER
ELECTRICAL ENGINEER

TR¡ ARCHITECTS
STRUCTURAL
CIVIL
GENERAL CONTRACTOR
ENGINEER
PLUMBING
ELECTRICAL

Tegethoff DEVELOPMENT

The Signature at West Pryor

2100 NW LOWENSTEIN DR.
LEE'S SUMMIT, MISSOURI 64081

LEGEND:

1. SANITARY SEWER CONNECTION.
2. FIRE AND DOMESTIC WATER CONNECTION.

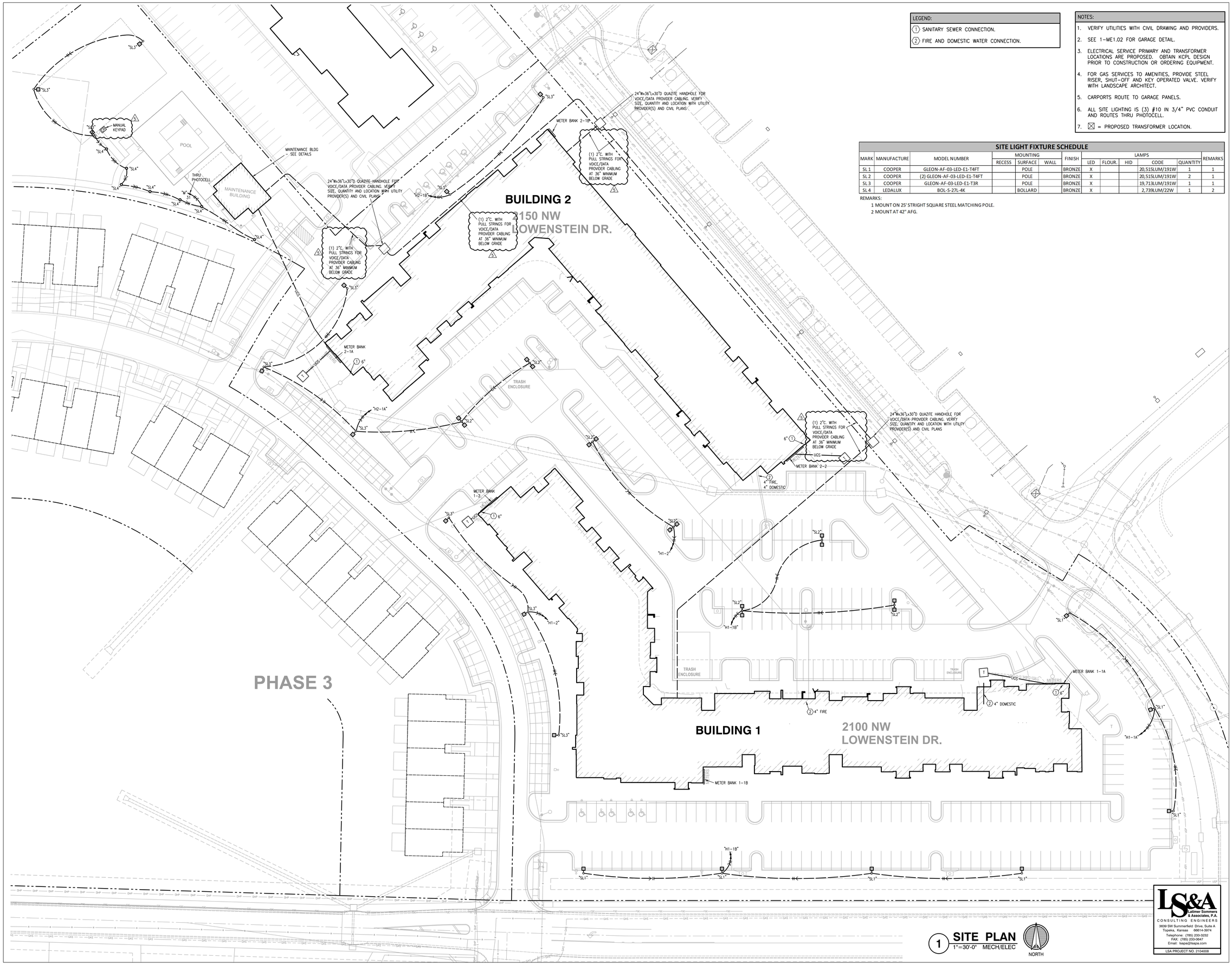
NOTES:

1. VERIFY UTILITIES WITH CIVIL DRAWING AND PROVIDERS.
2. SEE 1-ME1.02 FOR GARAGE DETAIL.
3. ELECTRICAL SERVICE PRIMARY AND TRANSFORMER LOCATIONS ARE PROPOSED. OBTAIN KCPL DESIGN PRIOR TO CONSTRUCTION OR ORDERING EQUIPMENT.
4. FOR GAS SERVICES TO AMENITIES, PROVIDE STEEL RISER, SHUT-OFF AND KEY OPERATED VALVE. VERIFY WITH LANDSCAPE ARCHITECT.
5. CARPORTS ROUTE TO GARAGE PANELS.
6. ALL SITE LIGHTING IS (3) #10 IN 3/4" PVC CONDUIT AND ROUTES THRU PHOTOCELL.
7. ☒ = PROPOSED TRANSFORMER LOCATION.

SITE LIGHT FIXTURE SCHEDULE

MARK	MANUFACTURE	MODEL NUMBER	MOUNTING			FINISH	LAMPS					REMARKS
			RECESS	SURFACE	WALL		LED	FLOUR.	HID	CODE	QUANTITY	
SL 1	COOPER	GLEON-AF-03-LED-E1-T4FT		POLE		BRONZE	X			20,515LUM/191W	1	1
SL 2	COOPER	(2) GLEON-AF-03-LED-E1-T4FT		POLE		BRONZE	X			20,515LUM/191W	2	1
SL 3	COOPER	GLEON-AF-03-LED-E1-T3R		POLE		BRONZE	X			19,713LUM/191W	1	1
SL 4	LEDALUX	BOL-S-27L-4K		BOLLARD		BRONZE	X			2,739LUM/22W	1	2

REMARKS:
1 MOUNT ON 25' STRIGHT SQUARE STEEL MATCHING POLE.
2 MOUNT AT 42" AFG.



1 SITE PLAN
1"=30'-0" MECH/ELEC

NORTH

LS&A
Latimer Sommers & Associates, P.A.
CONSULTING ENGINEERS
3639 SW Summerfield Drive, Suite A
Topeka, Kansas 66614-3974
Telephone: (785) 233-3232
FAX: (785) 233-0647
Email: lsapa@lsapa.com

LSA PROJECT NO. 2104008

TR¡ ARCHITECTS

TR¡ Architects
1700 S. Brentwood Blvd.
St. Louis, Missouri 63144
T: 314-395-9750
www.triarchitects.com

© Copyright 2021

DATE: 7.15.2021

REVISIONS (4)

1 PERMIT REVIEW COMMENTS	08-17-21
2 FDP COMMENTS	09-28-21
3 REVISION 1	02-11-22
4 REVISION 3	05-12-22

DWG BY CAD/RRB

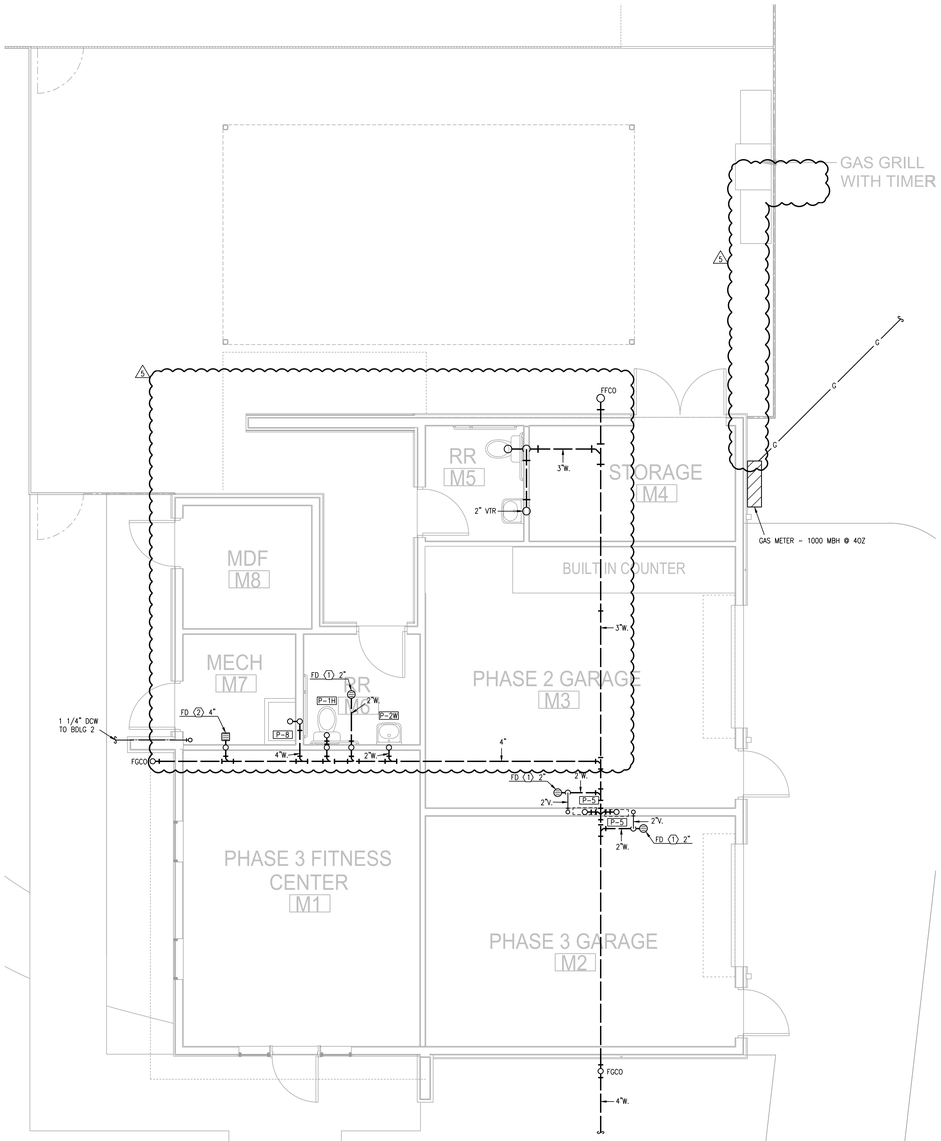
TR¡ PROJECT NO. 20-001

SHEET NO.

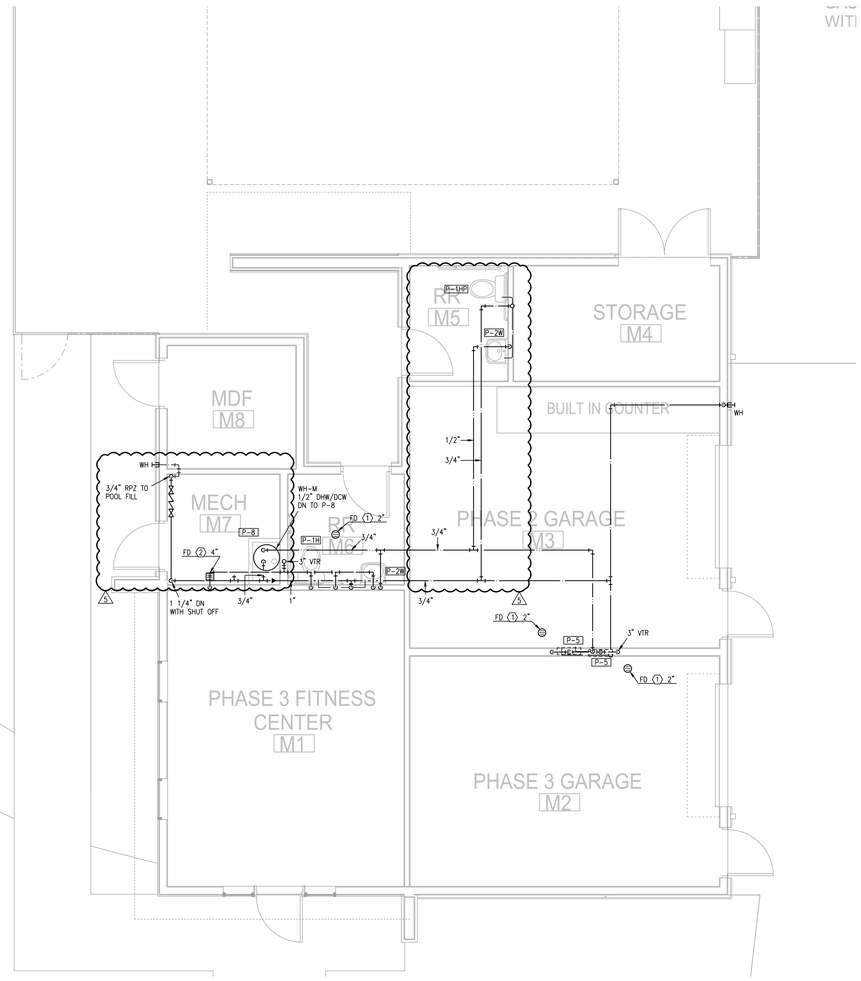
ME101

SITE PLAN - MECH/ELEC

RELEASED FOR CONSTRUCTION
As Noted on Plans Review
Development Services Department
Lee's Summit, Missouri
05/23/2022



1 **MAINTENANCE BLDG FLOOR PLAN**
1/4"=1'-0" BELOW-GRADE PLUMBING NORTH



2 **MAINTENANCE BLDG FLOOR PLAN**
1/4"=1'-0" PLUMBING NORTH

LS&A
Lalimer Sommers & Associates, P.A.
CONSULTING ENGINEERS
3639 SW Summerfield Drive, Suite A
Topeka, Kansas 66614-3974
Telephone: (785) 233-3232
FAX: (785) 233-0647
Email: lsapa@lsapa.com
LSA PROJECT NO. 2104008

STATE OF MISSOURI
RICHARD R. BEARMORE
NUMBER 2010018010
PROFESSIONAL ENGINEER
5-12-22

ARCHITECT
STRUCTURAL ENGINEER
CIVIL ENGINEER
GENERAL CONTRACTOR
MECHANICAL ENGINEER
PLUMBING ENGINEER
ELECTRICAL ENGINEER

TR,i ARCHITECTS
STRUCTURAL
CIVIL
GENERAL CONTRACTOR
ENGINEER
PLUMBING
ELECTRICAL

Tegethoff DEVELOPMENT

The Signature at West Pryor

2100 NW LOWENSTEIN DR.
LEE'S SUMMIT, MISSOURI 64081

TR,i ARCHITECTS
TR,i Architects
1700 S. Brentwood Blvd.
St. Louis, Missouri 63144
T: 314-395-9750
www.triarchitects.com
© Copyright 2021

DATE: 7.15.2021

REVISIONS 6

1 PERMIT REVIEW COMMENTS	08-17-21
2 FDP COMMENTS	09-28-21
3 REVISION 1	02-11-22
4 REVISION 2	03-01-22
5 REVISION 3	05-12-22

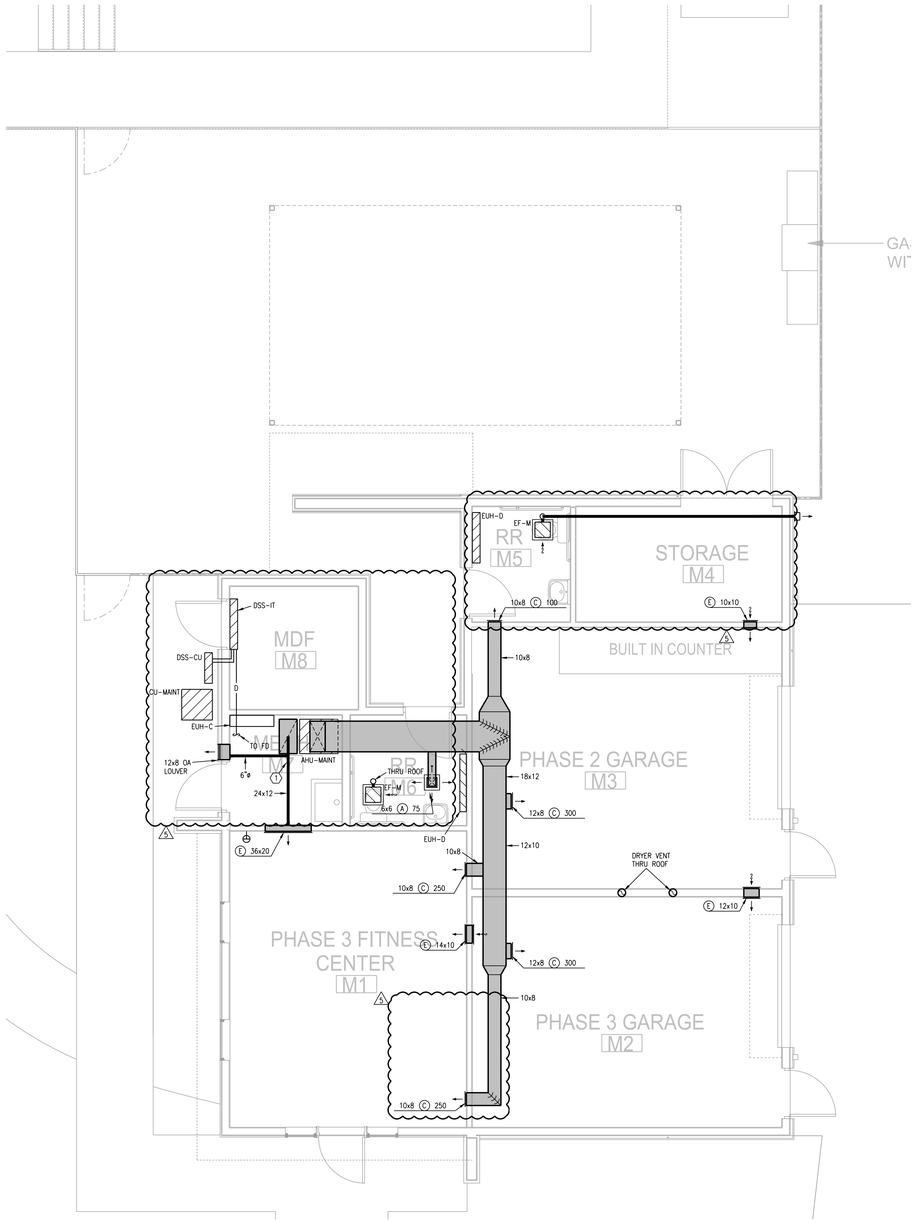
DWG BY CAD/RRB

TR,i PROJECT NO. 20-001

SHEET NO.

ME201

MAINTENANCE BLDG - PLUMBING



1 MAINTENANCE BLDG FLOOR PLAN

1/4"=1'-0"

HVAC

NORTH

RELEASED FOR CONSTRUCTION
As Noted on Plans Review
Development Services Department
Lee's Summit, Missouri
05/23/2022

STATE OF MISSOURI
RICHARD R. BEARSMORE
NUMBER
PROFESSIONAL ENGINEER
5-12-22

ARCHITECT
STRUCTURAL ENGINEER
CIVIL ENGINEER
GENERAL CONTRACTOR
MECHANICAL ENGINEER
PLUMBING ENGINEER
ELECTRICAL ENGINEER

TR,i ARCHITECTS
STRUCTURAL
CIVIL
GENERAL CONTRACTOR
ENGINEER
PLUMBING
ELECTRICAL

Tegethoff DEVELOPMENT

The Signature at West Pryor

2100 NW LOWENSTEIN DR.
LEE'S SUMMIT, MISSOURI 64081

TR,i ARCHITECTS

TR,i Architects
1790 S. Brentwood Blvd.
St. Louis, Missouri 63144
T: 314-395-9750
www.triarchitects.com
© Copyright 2021

DATE: 7.15.2021

REVISIONS 4

4 PERMIT REVIEW COMMENTS	08-17-21
3 REVISION 2	03-01-22
2 REVISION 3	05-12-22

DWG BY CAD/RRB

TR,i PROJECT NO. 20-001

SHEET NO.

ME202

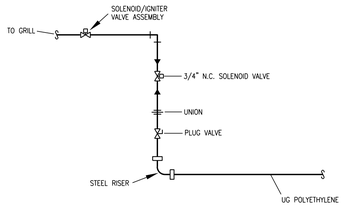
MAINTENANCE BLDG - HVAC

LS&A
Latimer Sommers & Associates, P.A.
CONSULTING ENGINEERS
3639 SW Summerfield Drive, Suite A
Topeka, Kansas 66614-3974
Telephone: (785) 233-3232
FAX: (785) 233-0647
Email: lsapa@lsapa.com
LSA PROJECT NO. 2104008

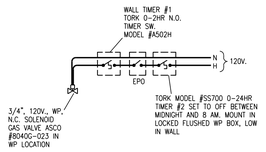
RELEASED FOR CONSTRUCTION
As Noted on Plans Review
Development Services Department
Lee's Summit, Missouri
05/23/2022

ALL CIRCUITING SHALL BE (2) #12 & (1) #12 GRD. UNLESS NOTED UNLESS.

$2500 ALLOWANCE FOR LIGHTING AND FANS IN COVERED SEATING

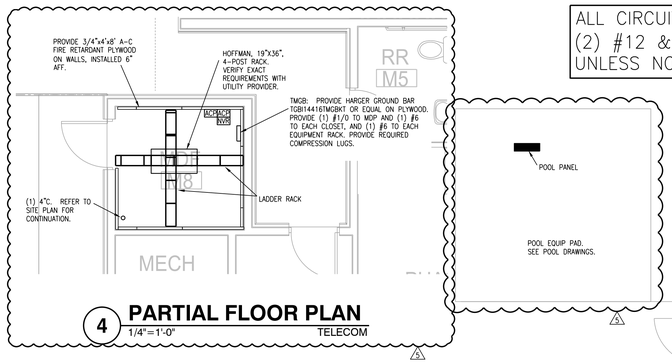


PIPING SCHEMATIC

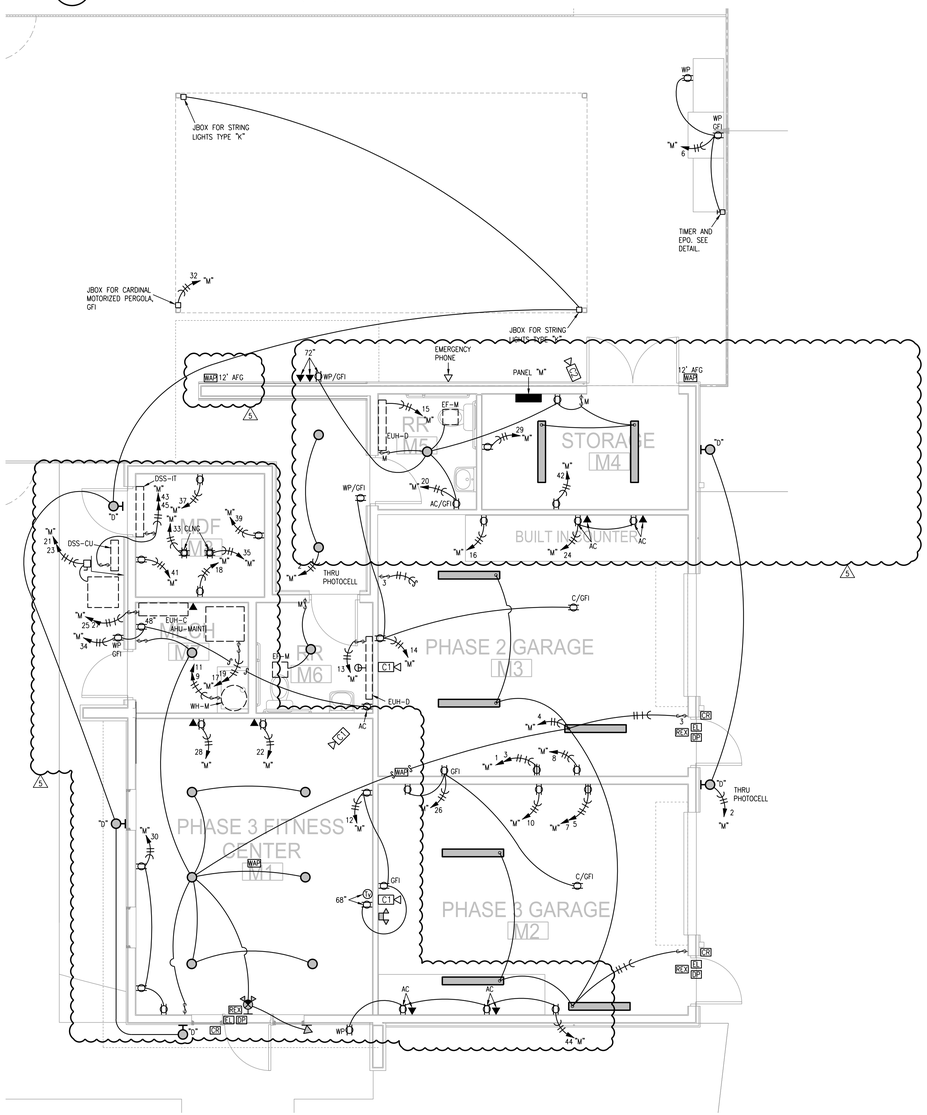


CONTROL SCHEMATIC

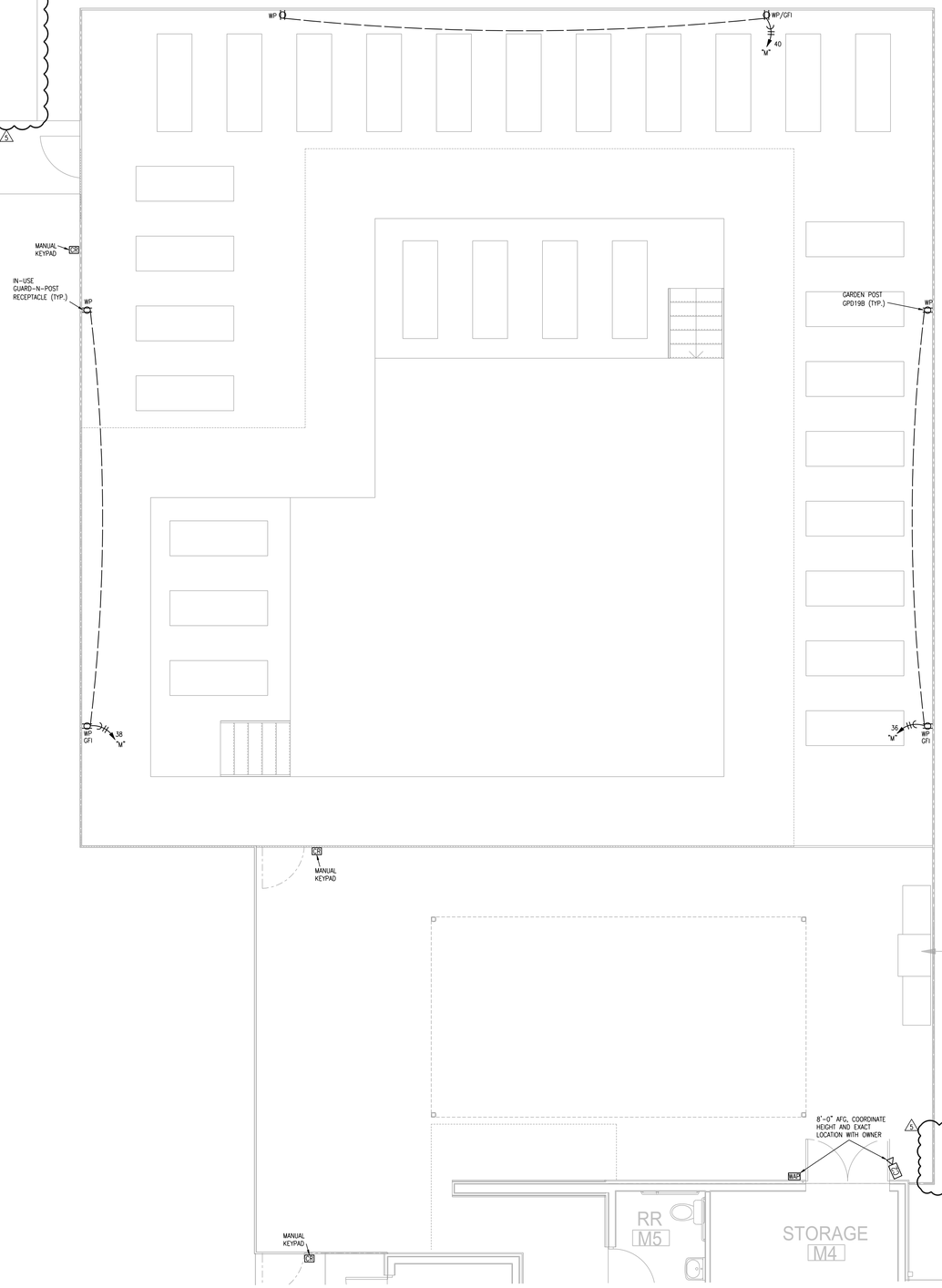
3 GAS CONTROL DETAIL
NO SCALE (GRILL)



4 PARTIAL FLOOR PLAN
1/4"=1'-0" TELECOM



1 MAINTENANCE BLDG FLOOR PLAN
1/4"=1'-0" ELECTRICAL NORTH



2 MAINTENANCE BLDG FLOOR PLAN
1/4"=1'-0" ELECTRICAL NORTH

LS&A
Latimer Sommers & Associates, P.A.
CONSULTING ENGINEERS
3639 SW Summerfield Drive, Suite A
Topeka, Kansas 66614-3974
Telephone: (785) 233-3232
FAX: (785) 233-0647
Email: lsapa@lsapa.com

LSA PROJECT NO: 2104008

STATE OF MISSOURI
RICHARD R. BEAREMORE
NUMBER 2010014744
PROFESSIONAL ENGINEER
5-12-22

ARCHITECT
STRUCTURAL ENGINEER
CIVIL ENGINEER
GENERAL CONTRACTOR
MECHANICAL ENGINEER
PLUMBING ENGINEER
ELECTRICAL ENGINEER

TR.i ARCHITECTS
STRUCTURAL
CIVIL
GENERAL CONTRACTOR
ENGINEER
PLUMBING
ELECTRICAL

Tegethoff DEVELOPMENT

The Signature at West Pryor

2100 NW LOWENSTEIN DR.
LEE'S SUMMIT, MISSOURI 64081

TRi ARCHITECTS

TR.i Architects
1790 S. Brentwood Blvd.
St. Louis, Missouri 63144
T: 314-395-9750
www.triarchitects.com
© Copyright 2021

DATE: 7.15.2021

REVISIONS

1 PERMIT REVIEW COMMENTS	08-17-21
2 FDP COMMENTS	09-28-21
1 REVISION 1	02-11-22
2 REVISION 2	03-01-22
3 REVISION 3	05-12-22

DWG BY CAD/RRB

TR.i PROJECT NO. 20-001

SHEET NO.

ME203

MAINTENANCE BLDG - ELECTRICAL

WATER HEATER SCHEDULE

MARK	MFGR	MODEL	FUEL	VOLTAGE/PH/ AMPS	INPUT	EFFICIENCY/ PF	GALLONS STORAGE	GPH RECOVERY @ 80° RISE	FLUE TYPE	EXPANSION	CIRCULATOR GPM/HD	NOTES
TYP APT	A.O. SMITH	ECLN-40	ELEC	208/1/19	4.5 KW	0.95	38	23	N/A			1, 2, 3
WH-2/1, 2/2, 2/3, 2/4, 1/1, 1/2, 1/3, 1/4	A.O. SMITH	EMT-2.5	ELEC	120/1/13	1.4 KW	N/A	2.5	7	N/A	RELIEF V.		1, 2
WH-M	A.O. SMITH	ECLN-40	ELEC	208/1/19	4.5 KW	0.95	38	23	N/A			1, 2, 3

NOTES
1- PROVIDE ASME P&T VALVE, DRAIN VALVE
2- PROVIDE COMBINATION STOP AND OPERATING PRESSURE RELIEF VALVE
3- LOW TYPE

ELECTRIC UNIT HEATER SCHEDULE

						ELECTRICAL				
MARK	MFGR	MODEL	KW	MBH	CFM	VOLTS/ PH	FLA	OCP	WIRING	CONFIGURATION - NOTES
EUH - A	BERKO	FRA-4024	3.0	10.2	100	208/1	12	20	(3) #12	WALL, 1, 4, 5
EUH - B	BERKO	HUHAA-1520	15.0	51.0	910	208/3	42	60	(2)#8 (1)#10	SUSPENDED, 4, 7
EUH - C	BERKO	SRC-1512	1.5	5.1	65	120/1	12	20	(3) #12	CEILING, 1, 4, 6
EUH - D	BERKO	2513W	0.75	2.3		120/1	8.3	20	(3) #12	FLOOR, 1, 4

NOTES:
1-SURFACE MOUNTED
2-SEMI-RECESSED
3-FULLY RECESSED
4-DISCONNECT
5-INTEGRAL TSTAT

PUMP SCHEDULE

MARK	MFGR	MODEL	TYPE	MEDIUM	GPM	FT. HEAD	SUMP	HP	ELEC	NOTES
ELEV SUMP	ZOELLER	152	SUBMERSIBLE	WATER	50	15	2' X 2' DEEP	1.5	120/1	1, 2, 3

NOTES
1. PLUG IN FLOAT CONTROL WITH 20 FT CORD, HIGH OIL SENSING, HIGH WATER LIGHTS/HORN CONTROL PANEL
2. PROVIDE WITH SIMPLEX #940-0005 SWITCH AND CONTROL PANEL WITH PIGGYBACK CORD, ADJUSTABLE SETPOINTS.
3. PUMP MUST PROVIDE 50 GPM AT 15 FEET OF HEAD

DRAIN SCHEDULE

MARK	APPLICATION	MFGR	MODEL	BODY MAT'L	DEPTH	GRATE MAT'L	GRATE SHAPE	ACCESSORIES
APT FD	FLOOR	SIOUX CHIEF	842	ABS/PVC	3"	NICKEL BRONZE	6" SQUARE	2
FD-1	FLOOR	ZURN	ZN-415S	COATED CAST IRON	3"	NICKEL BRONZE	6" ROUND	1, 2
FD-2	FLOOR	ZURN	Z-611-S	COATED CAST IRON	6"	COATED CAST IRON	9" SQUARE	1, 2, 3
RD-1	ROOF	SIOUX CHIEF	868	ABS/PVC	6"	POLY	DOME	
RD-2	ROOF	SIOUX CHIEF	868-STP2	ABS/PVC	6"	POLY	DOME	4

ACCESSORIES:
1 - DEEP TRAP, ADJUSTABLE GRATE
2 - USE WIDE FLANGE MODEL WHERE IN WOOD CONSTRUCTION
3 - INTERNAL STRAINER
4 - 2" DAM FOR OVERFLOW SERVICE

AIR TERMINAL DEVICE SCHEDULE

MARK	MANUFACTURER	MODEL	FINISH	DAMPER	FRAME TYPE	NOTES
A	AIR MATE	A190	WHITE	YES	GYP BD	
B	AIR MATE	170	WHITE	NO	GYP BD	
B1	AIR MATE	280 FF	WHITE	NO	GYP BD	
C	AIR MATE	240 VO	WHITE	YES	GYP BD	
D	PRICE	620DAL/N/L/A/B12	WHITE	YES	GYP. BD.	W/CRD
E	PRICE	635/N/L/A/B12	WHITE	NO	GYP. BD.	
E1	PRICE	635DAL/L/A/B12	WHITE	YES	GYP. BD.	

FAN SCHEDULE

					ELECTRICAL				
MARK	MFGR	MODEL	CFM	ESP	FAN HP	VOLTS/PH	FLA	OCP	WIRING	CONFIGURATION - NOTES
APT EF	AIR KING	FRAK80H	80	0.1	Fr.	120/1	1	15	(3) #12	ceiling, 1
EF-1/1 - 1/4, 2/1 - 2/3, M1, M2	AIR KING	FRAK80	80	0.1	Fr.	120/1	1	15	(3) #12	ceiling, 1
NOTES:	1-CEILING GRILLE, CRD, DS, WALL/ROOF CAP									

HVAC SYSTEM SCHEDULE

						AHU/RTU								OUTDOOR UNIT					
MARK	MFGR	NOM TON	MODEL	CFM	OA CFM	E.S.P.	HP	SMBH	TMBH	HEAT CAP	ELEC	FLA	OCP	MFGR	MODEL	ELEC	FLA	OCP	SEER	NOTES
UNITS																				
A1, A2, A4	GOODMAN	1 1/2	AWUF2408C14	600		0.5	0.2	12.4	17.4	5.6 KW	208/1	31	40	GOODMA N	GSX14018	208/1	14	20	14.0	
A3, A5, B1, B2, B3, B4	GOODMAN	2	AWUF2408C14	750		0.5	0.2	17.2	22.8	5.6 KW	208/1	31	40	GOODMAN	GSX14024	208/1	14	25	14.0	
C1, C2	GOODMAN	2 1/2	AWUF3010C14	950		0.5	0.33	20.6	27.4	7.5 KW	208/1	41	60	GOODMAN	GSX14030	208/1	15	30	14.0	
COMMON AREAS																				
1/1, 1/4 - 1/11, 2/1, 2/2, 2/4 - 2/10	GOODMAN	2	ARUF25B14	600-800	100	0.5	0.33	17.0	23.2	7.5 KW	208/1	40	50	GOODMAN	GSX14025	208/1	14	25	14.0	
1/3, 1/2	GOODMAN	5	ARUF61D14	1650-1950	265	0.5	0.75	41	57.5	11.4 KW	208/1	57	70	GOODMAN	GSX14-0601	208/1	26.3	50	14.0	
2/2, 2/3	GOODMAN	4	ARUF47D14	1400-1600	250	0.4	0.5	32	45	11.4 KW	208/1	57	70	GOODMAN	GSX14-0481	208/1	21.2	45	14.0	
MAINT	GOODMAN	4	ARUF47D14	1500	100	0.4	0.5	32	45	11.4 KW	208/1	57	70	GOODMAN	GSX14-0481	208/1	21.2	45	14.0	
DSS-1/1 - 1/5, 2/1 - 2/5	FUJITSU	1 1/2	ASU18RLF	540	0	0			18	23 MBH	208-240/1	W/HP		FUJITSU	ASU18RLF	208-240/1	13	25	19	WALL STAT, LOW AMB
DSS-1/6, IT	FUJITSU	1 1/2	AUU18RLFCC	400					18	21 MBH	208-240/1	W/HP		FUJITSU	AOU18RLFC	208-240/1	7.7	20	20	WALL STAT, LOW AMB
NOTE: PROVIDE LONG LINE ACCESSORY KIT ON ALL SPLIT SYSTEMS THAT EXCEED MFGR'S LIMITS																				

PLUMBING FIXTURE SCHEDULE

Mark	Item	Model	Description	Individual Connections				Accessories					
				W	V	CW	HW	Supplies	Stops	Carrier	P-Trap	Drain	Other
P-1	Water Closet, Tank Type	ProFlo #PF1401T	Floor-mounted standard height white vitreous china elongated bowl 1.6 gpf gravity type with Fluidmaster 400A flush mechanicsm and bolt covers. Provide molded wood closed front elongated white seat with integral bumpers, external check hinges with stainle	3" or 4"	2"	1"		2					
P-1H	Accessible Water Closet, Tank Type	ProFlo #1403T	Floor-mounted ADA height white vitreous china elongated bowl 1.6 gpf gravity type with Fluidmaster 400A flush mechanicsm and bolt covers. Provide molded wood closed front elongated white seat with integral bumpers, external check hinges with stainless st	3" or 4"	2"	1"		2					
P-2	Lavatory, Countertop	ProFlo #PF20174 with Pfister #LF-49-PEGS	20" x 17" oval vitreous china countertop lavatory with overflow. Faucet is 4" o.c. single lever ADA handle, copper waterways, chrome finish, 1.2 GPM, metal pop-up.	2"	1 1/2" or 2"	1/2"	1/2"	2	1		1	1	1 ON ACCESSIBLE UNITS
P-2W	Lavatory, Wall hung	Proflo #PF5511WH with Pfister #LF-049-PEB	ADA compliant, wall hung, single hole 20"x18" oval vitreous china lavatory with overflow. Faucet is ADA compliant, 1.2 GPM.	2"	1 1/2" or 2"	1/2"	1/2"	2	1		1	1	
P-3	Bathtub	Aquatic Bath 260030 with Pfister 8P8-PESGS	60" x 36" x 15" tall non-slip basin and tub overflow and turn and lift stop with finish to match faucet. Pressure-balanced single handle 8-inshed nickel valve, 2.5 gpm showerhead, tub spout with pull-up diverter. Provide fiture grab bar blocking. Water	2"	2"	1/2"	1/2"				2, 4		
P-3S	Shower	Aquatic Bath 3636CPANNS with Pfister LG89-7FEK	36" x 36" white fiberglass reinforced plastic/acrylic non-slip basin with surround, soap dishes. Pressure-balanced single handle valve, 2.5 gpm brushed nickel showerhead, drain to match.	2"	2"	1/2"	1/2"				2		
P-3SH	ADA Shower	Freedom Showers 38 1/2" x 37 1/2" with Pfister LG16-3RHK	ADA 38 1/2" x 37 1/2"white fiberglass reinforced plastic/acrylic non-slip basin with surround, soap dishes. Pressure-balanced single handle valve, 2.5 gpm brushed nickel showerhead, drain to match.	2"	2"	1/2"	1/2"				2		
P-4	Kitchen Sink	ProFlo #PFUC206 with Pfister #LG529-NES	Stainless steel under-mount 20 ga.dual bowl 33" x 22" x 8" deep. Single handle faucet with pull-out sprayer. Evergrind Model E101 disposer with cord/plug.	2"	2"	1/2"	1/2"	1	1		2	2	
P-4H	Accessible Kitchen Sink	Elkay ELUHAD281655 with Delta 16968	bowl 33" x 22" x 6" deep with back outlet. Single handle faucet with pull-out sprayer. ISE Badger 1 disposer with cord/plug. Install per ADA clearnaces.	2"	2"	1/2"	1/2"	1	1		2	2	
P-4C	Kitchen Sink	ProFlo #PFUC206 with PFISTER #LG529-NEB	Stainless steel under-mount 20 ga.dual bowl 33" x 22" x 8" deep. Single handle faucet with pull-out sprayer. Evergrind Model E101 disposer with cord/plug.	2"	2"	1/2"	1/2"	1	1		2	2	
P-5	Washer Box	Guy Gray #WB200HATM	Recessed non-metallic with dual PVC/ABS 2" outlets, two angle quarter turn stops with built-in shock absorbers.	2"	2"	1/2"	1/2"	1			3		
P-6	Water Outlet Box	Guy Gray #BIM877QTS	Recessed non-metallic with two angle quarter turn stops.			1/2"		1					
P-8	Janitor's Sink	Fiat #MSB-2424	24" x 24" x 10" white molded stone with stainless steel integral drain, chromie plated brass wall mounted faucet with VB, integral stops, adjustable wall brace, pail hook, 3/4" hose threaded spout.	2" or 3"	2"	1/2"	1/2"				2		2
P-9	Accessible Dual Height Fountain with Bottle Filler	Elkay #LZSTL8WSLK	ADA wall-mounted water station including bubbler and bottle-filler, side and front push buttons.	2"	1 1/2" or 2"	1/2"		2	1		2		

Supplies
1 - Flexible braided stainless steel
2 - Flexible braided compression hose.
3 - Zurn #ZER6003-CP 1.0 gpf diaphragm type.
4 - Provide tempering valve below sink set at 110 deg

Stops
1 - Angle handle compression

Carrier
1 - Steel tube floor-mounted in-wall carrier with arms

P-Trap
1 - PVC with deep escutcheon
2 - PVC
3 - deep seal PVC trap and 30" standpipe.

Drain
1 - Metal pop-up with tailpiece
2 - Basket strainers in finish to match faucet, tailpiece.

Other
1 - Provide trap and supply guard if exposed.
2 - Provide mop bracket, hose bracket, SS wall guards

RELEASED FOR CONSTRUCTION
As Noted on Plans Review
Development Services Department
Lee's Summit, Missouri
05/23/2022

STATE OF MISSOURI
RICHARD R. BEARDMORE
NUMBER 2010035010
PROFESSIONAL ENGINEER
5-12-22

ARCHITECT
STRUCTURAL ENGINEER
CIVIL ENGINEER
GENERAL CONTRACTOR
MECHANICAL ENGINEER
PLUMBING ENGINEER
ELECTRICAL ENGINEER

TRi ARCHITECTS
STRUCTURAL
CIVIL
GENERAL CONTRACTOR
ENGINEER
PLUMBING
ELECTRICAL

Tegethoff DEVELOPMENT

The Signature at West Pryor

2100 NW LOWENSTEIN DR.
LEE'S SUMMIT, MISSOURI 64081

TRi ARCHITECTS

TRi Architects
1750 S. Brentwood Blvd.
St. Louis, Missouri 63144
T: 314-395-9750
www.triarchitects.com
© Copyright 2021

DATE: 7.15.2021

REVISIONS 4

1 PERMIT REVIEW COMMENTS	08-17-21
4 REVISION 3	05-12-22

DWG BY CAD/RRB

TR,i PROJECT NO. 20-001

SHEET NO.

MP104

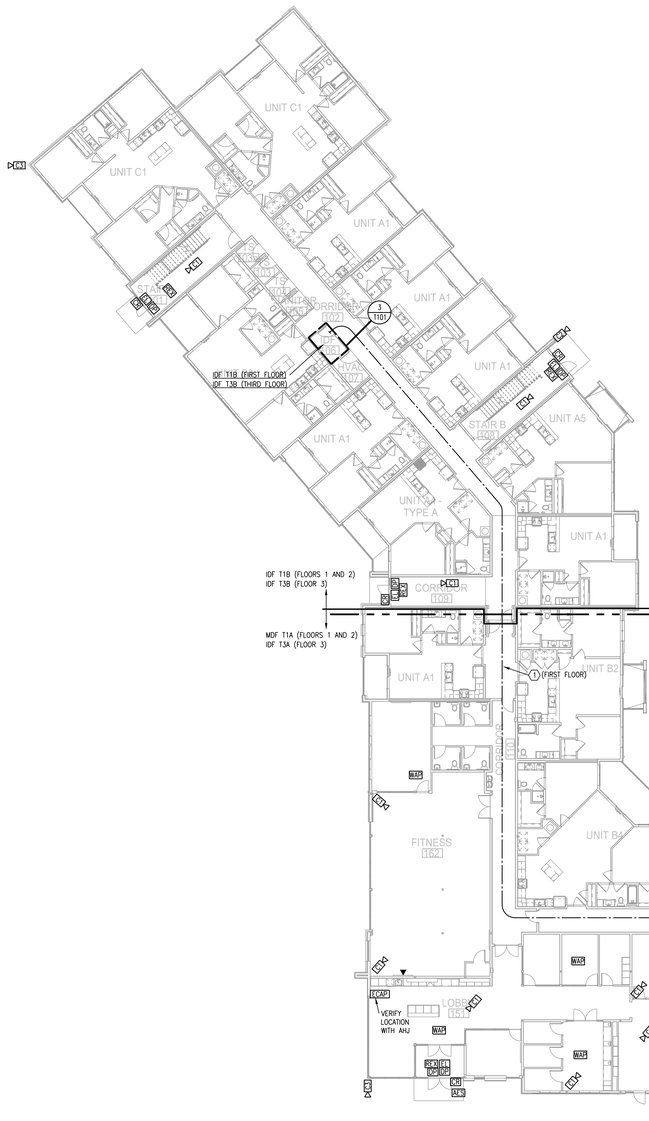
MECHANICAL SCHEDULES

LS&A Lattimer Sommers & Associates, P.A.
CONSULTING ENGINEERS
3639 SW Summerfield Drive, Suite A
Topeka, Kansas 66614-3974
Telephone: (785) 233-3232
FAX: (785) 233-0647
Email: lsapa@lsapa.com
LSA PROJECT NO. 2104008

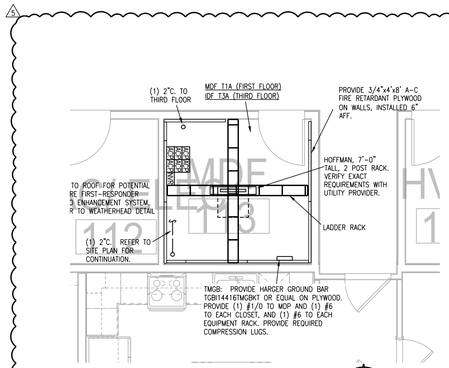
RELEASED FOR CONSTRUCTION
As Noted on Plans Review
Development Services Department
Lee's Summit, Missouri
05/23/2022

LEGEND:
(1) 2" EMT CONDUIT BY E/C

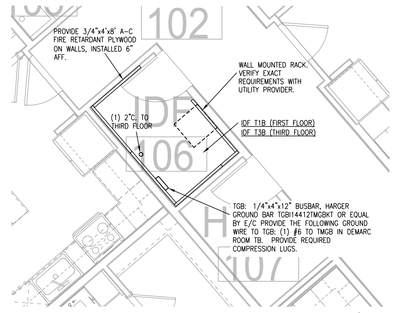
NOTES:
1. ROUTE ALL CABLING FOR CARD READERS AND CAMERAS TO MDF T1A.



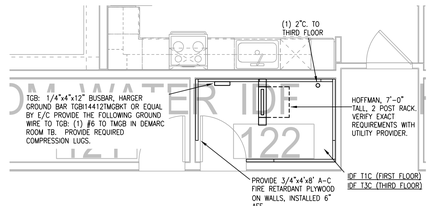
1 BLDG 1-A, FIRST FLOOR PLAN
1/16"=1'-0" (3RD FLOOR SIM.) TELECOM NORTH



2 PARTIAL FLOOR PLAN
1/4"=1'-0" TELECOM NORTH



3 PARTIAL FLOOR PLAN
1/4"=1'-0" TELECOM NORTH



4 PARTIAL FLOOR PLAN
1/4"=1'-0" TELECOM NORTH

LSA
Latimer Sommers & Associates, P.A.
CONSULTING ENGINEERS
3639 SW Summerfield Drive, Suite A
Topeka, Kansas 66614-3974
Telephone: (785) 233-3232
FAX: (785) 233-0647
Email: lsapa@lsapa.com

LSA PROJECT NO. 2104008

ARCHITECT
STRUCTURAL ENGINEER
CIVIL ENGINEER
GENERAL CONTRACTOR
MECHANICAL ENGINEER
PLUMBING ENGINEER
ELECTRICAL ENGINEER

STATE OF MISSOURI
RICHARD R. BEARDMORE
NUMBER
PROFESSIONAL ENGINEER
5-12-22

TR;i ARCHITECTS
STRUCTURAL
CIVIL
GENERAL CONTRACTOR
ENGINEER
PLUMBING
ELECTRICAL

Tegethoff DEVELOPMENT

The Signature at West Pryor

2100 NW LOWENSTEIN DR.
LEE'S SUMMIT, MISSOURI 64081

TRi ARCHITECTS

TR;i Architects
1700 S. Brentwood Blvd.
St. Louis, Missouri 63144

© Copyright 2021

T: 314-395-9750
www.triarchitects.com

DATE: 7.15.2021

REVISIONS (A)

3 REVISION 3	05-12-22

DWG BY CAD/RRB

TR;i PROJECT NO. 20-001

SHEET NO.

T101

BLDG 1-A, FIRST FLOOR PLAN - TELECOM

RELEASED FOR CONSTRUCTION
As Noted on Plans Review
Development Services Department
Lee's Summit, Missouri
05/23/2022

STATE OF MISSOURI
RICHARD R. BEARDMORE
NUMBER 2010018744
PROFESSIONAL ENGINEER
5-12-22

ARCHITECT	TR.i ARCHITECTS
STRUCTURAL ENGINEER	STRUCTURAL
CIVIL ENGINEER	CIVIL
GENERAL CONTRACTOR	GENERAL CONTRACTOR
MECHANICAL ENGINEER	ENGINEER
PLUMBING ENGINEER	PLUMBING
ELECTRICAL ENGINEER	ELECTRICAL

Tegethoff DEVELOPMENT

The Signature at West Pryor

2100 NW LOWENSTEIN DR.
LEE'S SUMMIT, MISSOURI 64081

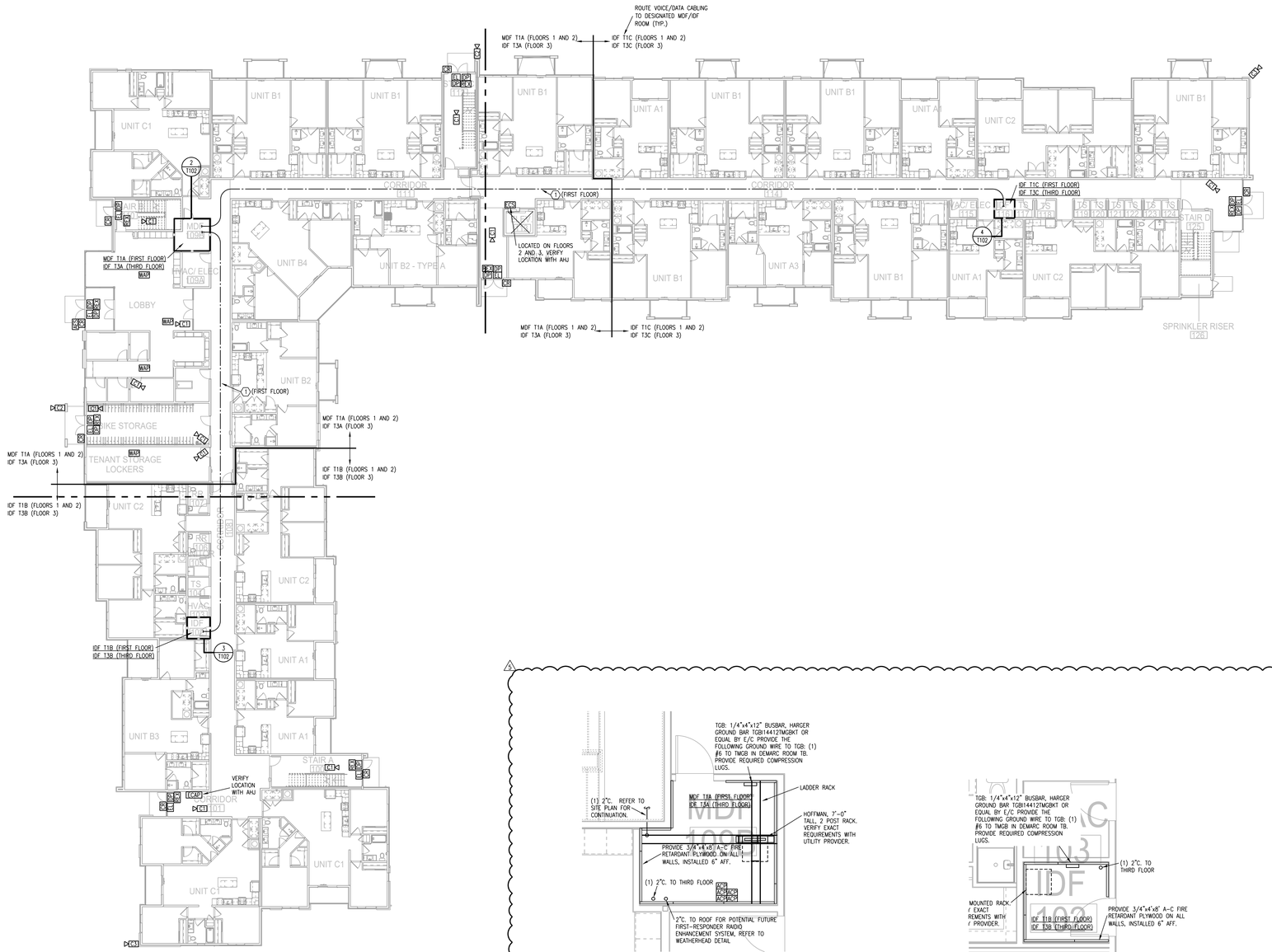
⚠5

LEGEND:

(1) (1) 2" EMT CONDUIT BY E/C

NOTES:

1. ROUTE ALL CABLING FOR CARD READERS AND CAMERAS TO MDF T1A.



1 BLDG 2-A, FIRST FLOOR PLAN

1/16"=1'-0" (THIRD FLOOR SIM.) TELECOM NORTH

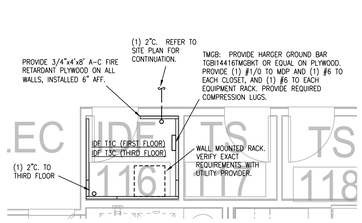
⚠5

2 PARTIAL FLOOR PLAN

1/4"=1'-0" TELECOM NORTH

3 PARTIAL FLOOR PLAN

1/4"=1'-0" TELECOM NORTH



4 PARTIAL FLOOR PLAN

1/4"=1'-0" TELECOM NORTH

TR.i ARCHITECTS
1790 S. Brentwood Blvd.
St. Louis, Missouri 63144
T: 314-395-9750
www.triarchitects.com

© Copyright 2021

DATE: 7.15.2021

REVISIONS ⚠5

⚠5 REVISION 3	05-12-22

DWG BY CAD/RRB

TR.i PROJECT NO. 20-001

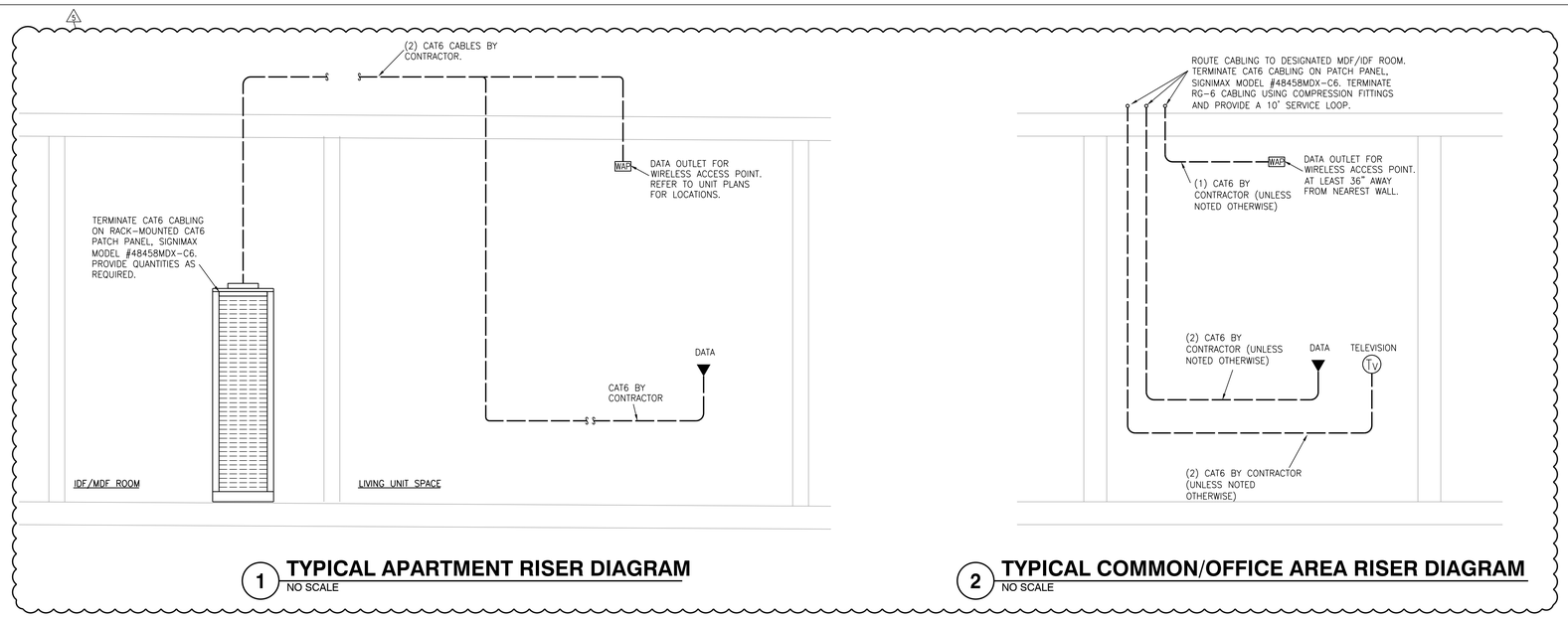
SHEET NO.

T102

BLDG 2-A, PARTIAL FIRST FLOOR PLAN - TELECOM

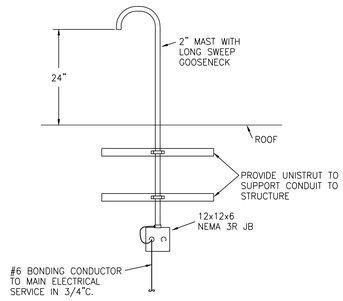
LS&A Latimer Sommers & Associates, P.A.
CONSULTING ENGINEERS
3639 SW Summerfield Drive, Suite A
Topeka, Kansas 66614-3974
Telephone: (785) 233-3232
FAX: (785) 233-0647
Email: lsapa@lsapa.com

LSA PROJECT NO. 2104008



1 TYPICAL APARTMENT RISER DIAGRAM
NO SCALE

2 TYPICAL COMMON/OFFICE AREA RISER DIAGRAM
NO SCALE



3 WEATHERHEAD DETAIL
NO SCALE

TWO-WAY COMMUNICATION SYSTEM SCHEDULE				
MARK	MANUFACTURER	MODEL NUMBER	DESCRIPTION	REMARKS
ECAP	CORNELL	A-4800M	EMERGENCY CALL ANNUNCIATOR PANEL	1
ECS	CORNELL	4800V	EMERGENCY CALL STATION	2
PS	CORNELL	B-5248A	POWER SUPPLY	3

REMARKS:
1 - PROVIDE POWER SUPPLIES AS REQUIRED. PROVIDE WITH STI MODEL #STI-7521 NEMA 4X CLEAR ENCLOSURE WITH THUMB LOCK.
2 - PROVIDE WITH DOUBLE GANG BACKBOX AND STI MODEL #STI-7511E CLEAR ENCLOSURE WITH THUMB LOCK.
3 - VERIFY SIZE OF POWER SUPPLY WITH LAYOUT OF THE SYSTEM.

ACCESS CONTROL CABLE SCHEDULE				
MARK	MANUFACTURER	MODEL/PART NUMBER	DESCRIPTION	REMARKS
1C,2C,3C,4C	BELDEN	538AFS	INSIDE ACCESS CONTROL CABLE (COMBO CABLE)	1
5C	BELDEN	5302UE	ELECTRIC LOCK CABLE 18 GA 4 COND STRANDED	1, 2
6C	CSC	759218	OUTSIDE ACCESS CONTROL CABLE (COMBO CABLE)	1

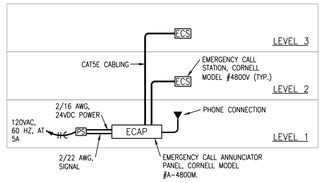
REMARKS:
1 - PROVIDED AND INSTALLED BY E/C.
2 - E/C TO ROUTE CABLE FROM DEVICE AND LEAVE A 8'-0" SERVICE LOOP AT THE BURGLAR ALARM PANEL. PROVIDE A 24" SERVICE LOOP AT DEVICE. PROVIDE A MECHANICALLY PRINTED LABEL ON EACH END OF EACH CABLE FOR REFERENCE.
3 - PROVIDED AS A PART OF THE DOOR HARDWARE PACKAGE.

ACCESS CONTROL LEGEND	
ACP	ACCESS CONTROL PANEL
CR	HID CARD READER
REX	REQUEST TO EXIT *
DP	DOOR POSITION SWITCH *
EL	ELECTRIC LOCK (24V DC.) *
PS	POWER SUPPLY (24V DC.) *
ADA	ADA PUSH BUTTON *
DADA	DUAL ADA PUSH BUTTON *
ADAM	ADA MOTORIZED OPERATOR *
AMS	AUDIO INTERCOM MASTER STATION
AIC	AUDIO INTERCOM
DPDT	DOUBLE THROW, DOUBLE POLE DOOR POSITION SWITCH *

* - INDICATES PROVIDED BY DOOR HARDWARE SUPPLIER. REFER TO DOOR HARDWARE SPECIFICATIONS FOR FURTHER WIRING/POWER REQUIREMENTS.

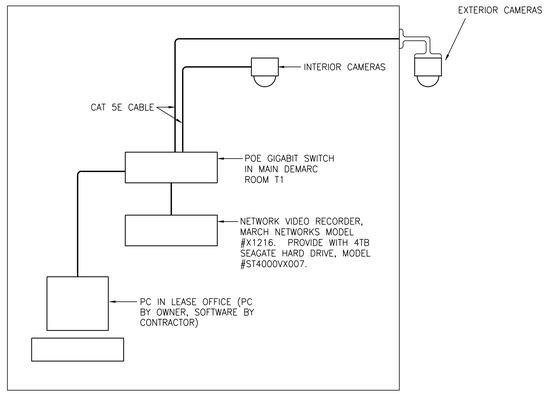
SECURITY SCHEDULE				
MARK	MANUFACTURER	MODEL NUMBER	DESCRIPTION	REMARKS
CR	SALTO	XS4	CARD READER	
ACP	SALTO	XS4 CU42EO/CU4200	ACCESS CONTROL PANEL/AUXILLIARY CONTROL PANEL	2
	SALTO		FOBs	1
C1	MARCH NETWORKS	35835-101	INDOOR CAMERA	
C2	AXIS	-	OUTDOOR 180° CAMERA	
C3	AXIS	P3717-PLE	OUTDOOR 360° CAMERA	3

REMARKS:
1 - PROVIDE 600.
2 - PROVIDE QUANTITIES SHOWN ON PLANS.
3 - PROVIDE WITH T94N01D PENDANT KIT.

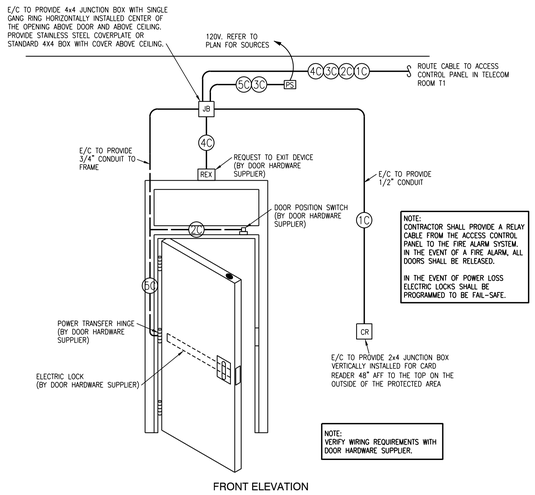


4 TWO-WAY COMMUNICATION DIAGRAM
NO SCALE

LEGEND:
1C PROXIMITY CARD READER (ORANGE) 18GA./6 COND. TWISTED OVERALL SHIELD, RISER RATED CABLE.
2C MAGNETIC SWITCH (WHITE) 18GA./2 COND. TWISTED OVERALL SHIELD, RISER RATED CABLE.
5C ELECTRIC LOCK (GRAY) 16GA./4 COND. TWISTED OVERALL SHIELD, RISER RATED CABLE.
4C REQUEST TO EXIT (BLUE) 18GA./4 COND. TWISTED OVERALL SHIELD, RISER RATED CABLE.
5C ELECTRIC LOCK FROM PS TO PUSHBAR 18GA./4 COND. TWISTED OVERALL SHIELD, RISER RATED CABLE.

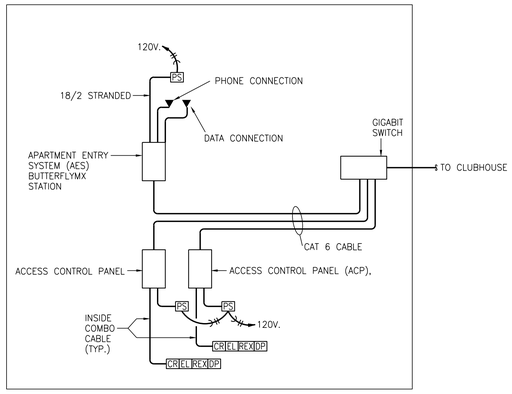


5 TYPICAL SECURITY CAMERA DETAIL
NO SCALE

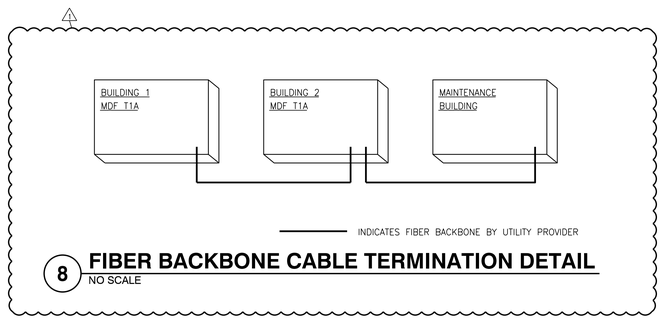


FRONT ELEVATION

6 ACCESS CONTROL DOOR DETAIL
NO SCALE — SINGLE DOOR ENTRY



7 TYPICAL ACCESS CONTROL PANEL DETAIL
NO SCALE



8 FIBER BACKBONE CABLE TERMINATION DETAIL
NO SCALE

RELEASED FOR CONSTRUCTION
As Noted on Plans Review
Development Services Department
Lee's Summit, Missouri
05/23/2022

STATE OF MISSOURI — RICHARD R. BEAREMORE — NUMBER 2010018744 — PROFESSIONAL ENGINEER
5-12-22

ARCHITECT
STRUCTURAL ENGINEER
CIVIL ENGINEER
GENERAL CONTRACTOR
MECHANICAL ENGINEER
PLUMBING ENGINEER
ELECTRICAL ENGINEER

TR.i ARCHITECTS
STRUCTURAL
CIVIL
GENERAL CONTRACTOR
ENGINEER
PLUMBING
ELECTRICAL

Tegethoff DEVELOPMENT

The Signature at West Pryor

2100 NW LOWENSTEIN DR.
LEE'S SUMMIT, MISSOURI 64081

TRi ARCHITECTS
TR.i Architects
1790 S. Brentwood Blvd.
St. Louis, Missouri 63144
T: 314-395-9750
www.triarchitects.com
© Copyright 2021

DATE: 7.15.2021

REVISIONS 4
1 PERMIT REVIEW COMMENTS 08-17-21
4 REVISION 3 05-12-22

DWG BY CAD/RRB
TR.i PROJECT NO. 20-001
SHEET NO. T201
TELECOM DETAILS

LS&A Latimer Sommers & Associates, P.A.
CONSULTING ENGINEERS
3639 SW Summerfield Drive, Suite A
Topeka, Kansas 66614-3974
Telephone: (785) 233-3232
FAX: (785) 233-0647
Email: lsapa@lsapa.com
LSA PROJECT NO. 2104008