FIRE ALARM PLAN - BUILDING 1 - FLOOR 1 - AREA A

1

SCALE : 1/8" = 1-0'

JSC ENGINEERS

MO COA NO. 2012006786 / KS COA NO. E-2818
1925 CENTRAL ST. SUITE #201
KANSAS CITY, MO 64108
phone: (816) 272-5289
email: jsmothers@jscengineers.com

STATE OF MISSOURI
JESSEY P. BORRIS
NUMBER PE-2019041526
PROFESSIONAL ENGINEER

04-13-2022

FIRE ALARM CONTRACTOR:

SIG

SYSTEM INTEGRATION GROUP

PROJECT:

SIGNATURE AT PRYOR II

2100 AND 2150 NW LOWENSTEIN DR.
LEE'S SUMMIT, MISSOURI 64081

REVISIONS:	DATE / DESCRIPTION
1	
2	
3	
4	
5	

Copyright 2022
JSC Engineers

ISSUED:

PERMIT

SHEET TITLE:

FIRE ALARM PLANS

DATE: 04.13.2022
JOB NO.: 22-094
SHEET:

FA101

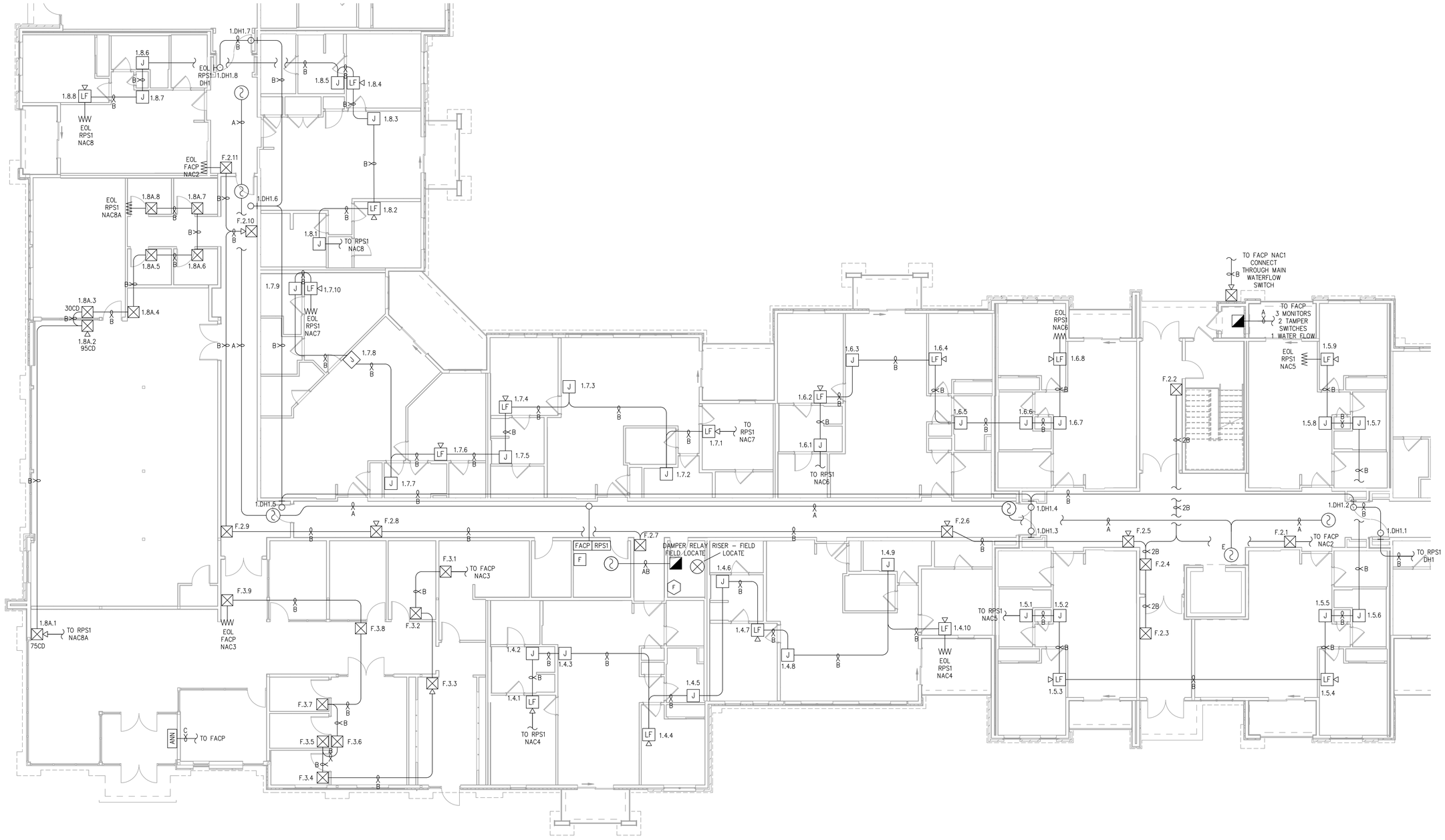

FIRE ALARM PLAN - BUILDING 1 - FLOOR 1 - AREA B

1

SCALE : 1/8" = 1-0'

JSC ENGINEERS

MO COA NO. 2012006786 / KS COA NO. E-2818
1925 CENTRAL ST. SUITE #201
KANSAS CITY, MO 64108
phone: (816) 272-5289
email: jsmothers@jscengineers.com

STATE OF MISSOURI
JESSEY P. SMORRIS
NUMBER PE-2019041526
PROFESSIONAL ENGINEER

04-13-2022

FIRE ALARM CONTRACTOR:

SIG

SYSTEM INTEGRATION GROUP

PROJECT:

SIGNATURE AT PRYOR II

2100 AND 2150 NW LOWENSTEIN DR.
LEE'S SUMMIT, MISSOURI 64081

REVISIONS:	DATE / DESCRIPTION
1	
2	
3	
4	
5	

Copyright 2022
JSC Engineers

ISSUED:

PERMIT

SHEET TITLE:

FIRE ALARM PLANS

DATE: 04.13.2022
JOB NO.: 22-094
SHEET:

FA102

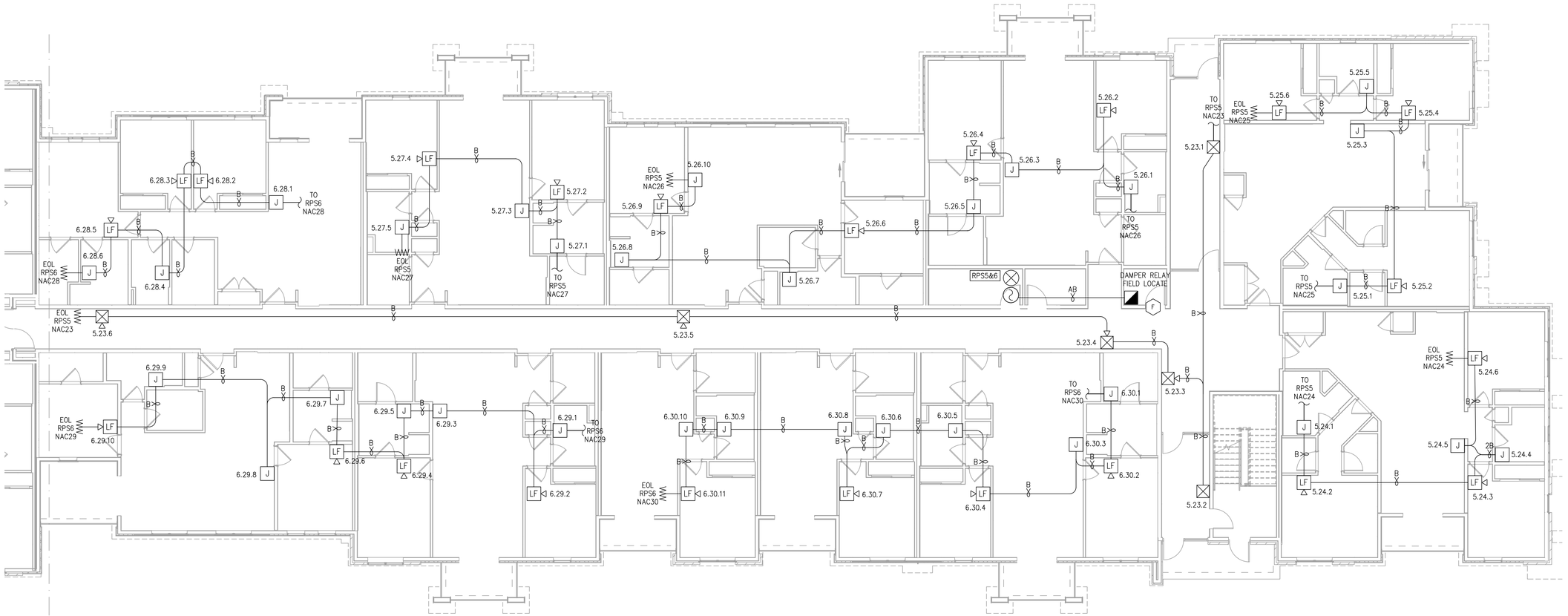

FIRE ALARM PLAN - BUILDING 1 - FLOOR 1 - AREA C

1

SCALE : 1/8" = 1-0'

JSC ENGINEERS

MO COA NO. 2012006786 / KS COA NO. E-2818
1925 CENTRAL ST. SUITE #201
KANSAS CITY, MO 64108
phone: (816) 272-5289
email: jsmothers@jscengineers.com

STATE OF MISSOURI
JESSEY P. BORRIS
NUMBER PE-2019041526
PROFESSIONAL ENGINEER

04-13-2022

FIRE ALARM CONTRACTOR:

SIG

SYSTEM INTEGRATION GROUP

PROJECT:

SIGNATURE AT PRYOR II

2100 AND 2150 NW LOWENSTEIN DR.
LEE'S SUMMIT, MISSOURI 64081

REVISIONS:	DATE / DESCRIPTION
1	
2	
3	
4	
5	

Copyright 2022
JSC Engineers

ISSUED:

PERMIT

SHEET TITLE:

FIRE ALARM PLANS

DATE: 04.13.2022
JOB NO.: 22-094
SHEET:

FA103

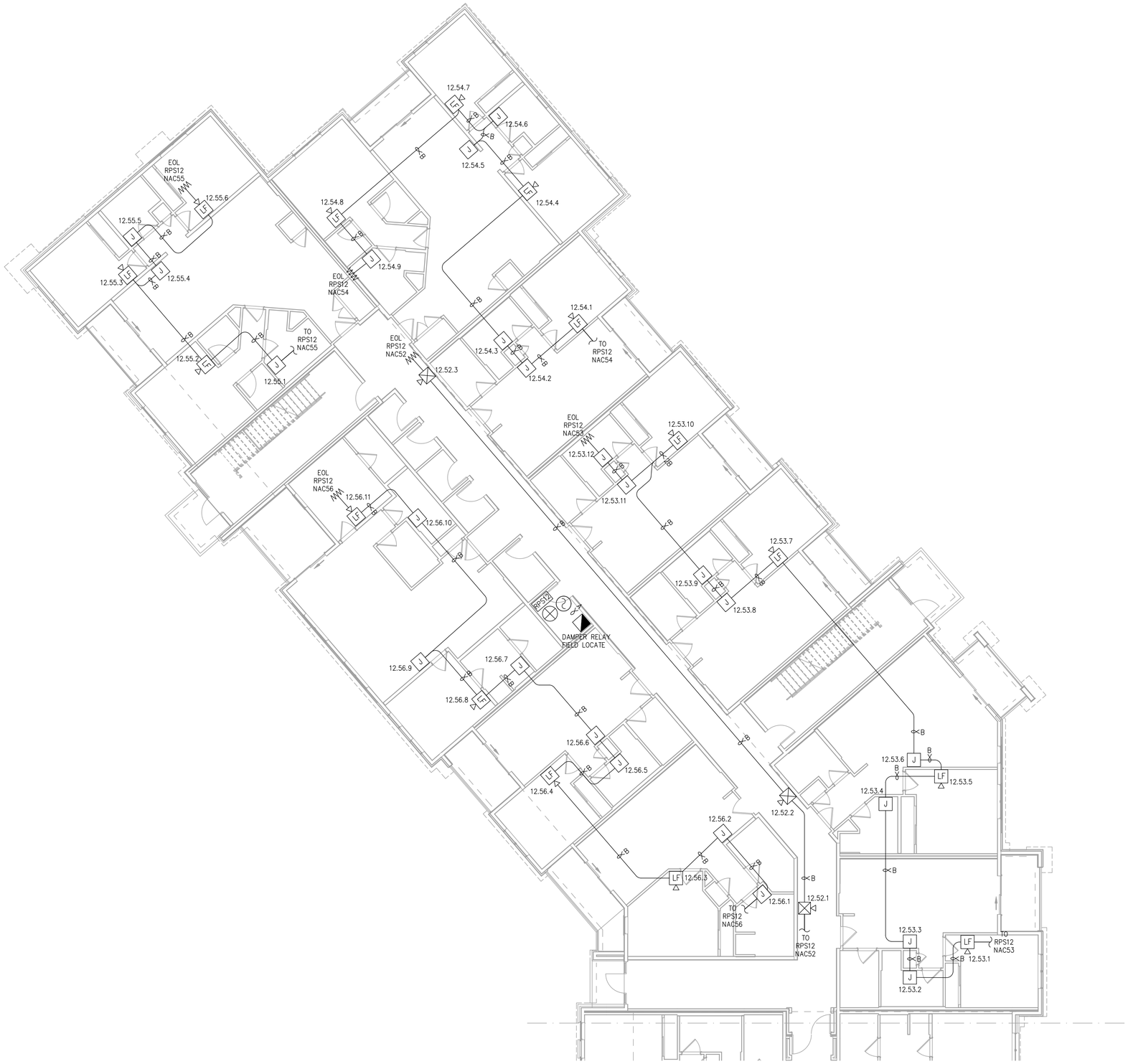

FIRE ALARM PLAN - BUILDING 1 - FLOOR 2 - AREA A

1

SCALE : 1/8" = 1-0'

JSC ENGINEERS

MO COA NO. 2012006786 / KS COA NO. E-2818
1925 CENTRAL ST. SUITE #201
KANSAS CITY, MO 64108
phone: (816) 272-5289
email: jsmothers@jscengineers.com

STATE OF MISSOURI
JESSEY P. BORRIS
NUMBER
PE-2019041526
PROFESSIONAL ENGINEER

04-13-2022

FIRE ALARM CONTRACTOR:

SIG
SYSTEM INTEGRATION GROUP

PROJECT:

SIGNATURE AT PRYOR II

2100 AND 2150 NW LOWENSTEIN DR.
LEE'S SUMMIT, MISSOURI 64081

REVISIONS:	DATE / DESCRIPTION
1	
2	
3	
4	
5	

Copyright 2022
JSC Engineers

ISSUED:

PERMIT

SHEET TITLE:

FIRE ALARM PLANS

DATE: 04.13.2022
JOB NO.: 22-094
SHEET:

FA104

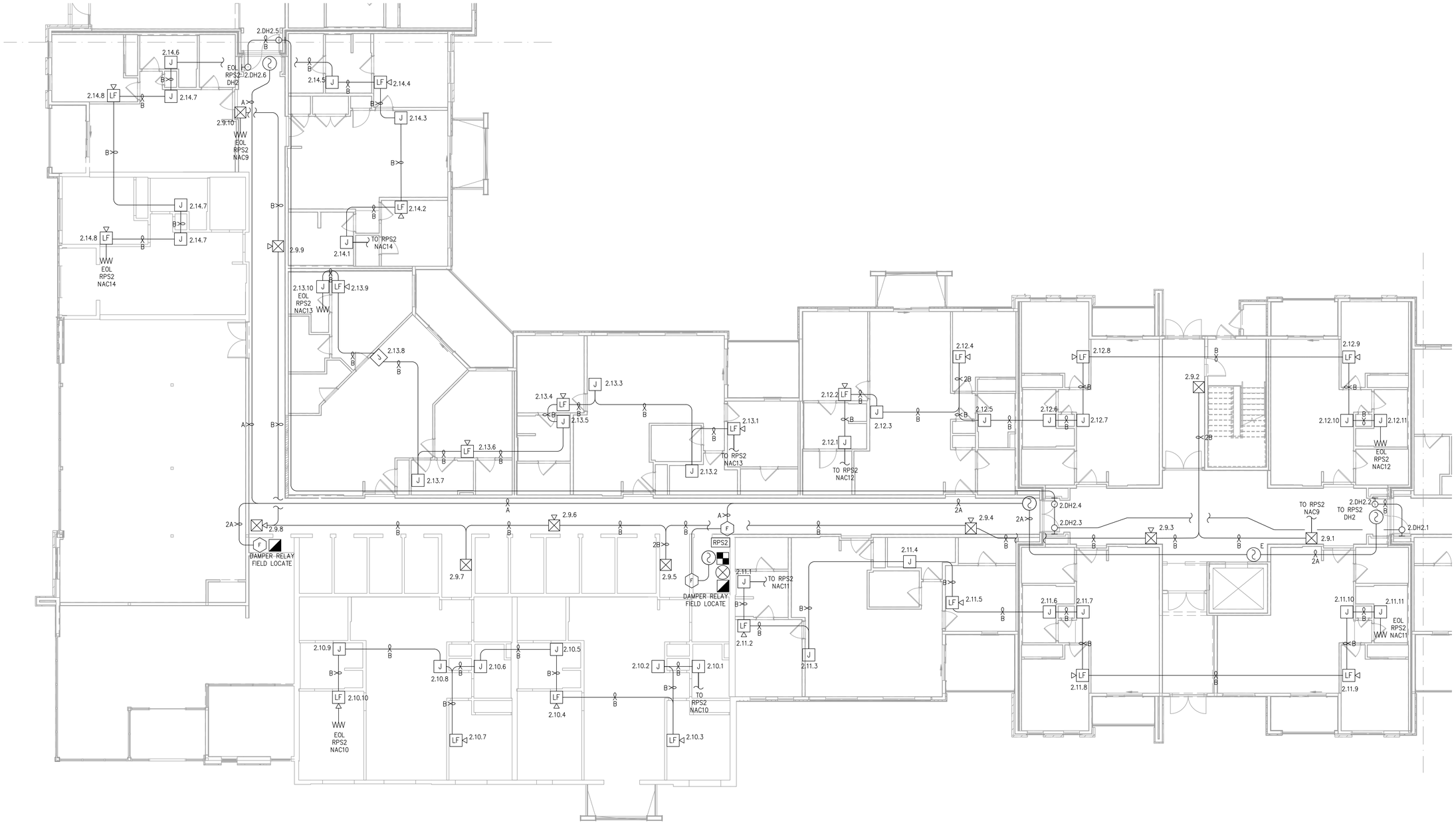

FIRE ALARM PLAN - BUILDING 1 - FLOOR 2 - AREA B

1

SCALE : 1/8" = 1-0'

JSC ENGINEERS

MO COA NO. 2012006786 / KS COA NO. E-2818
1925 CENTRAL ST. SUITE #201
KANSAS CITY, MO 64108
phone: (816) 272-5289
email: jsmothers@jscengineers.com

STATE OF MISSOURI
JESSEY P. BORRIS
NUMBER PE-2019041526
PROFESSIONAL ENGINEER

04-13-2022

FIRE ALARM CONTRACTOR:

SIG

SYSTEM INTEGRATION GROUP

PROJECT:

SIGNATURE AT PRYOR II

2100 AND 2150 NW LOWENSTEIN DR.
LEE'S SUMMIT, MISSOURI 64081

REVISIONS:	DATE / DESCRIPTION
1	
2	
3	
4	
5	

Copyright 2022
JSC Engineers

ISSUED:

PERMIT

SHEET TITLE:

FIRE ALARM PLANS

DATE: 04.13.2022
JOB NO.: 22-094
SHEET:

FA105

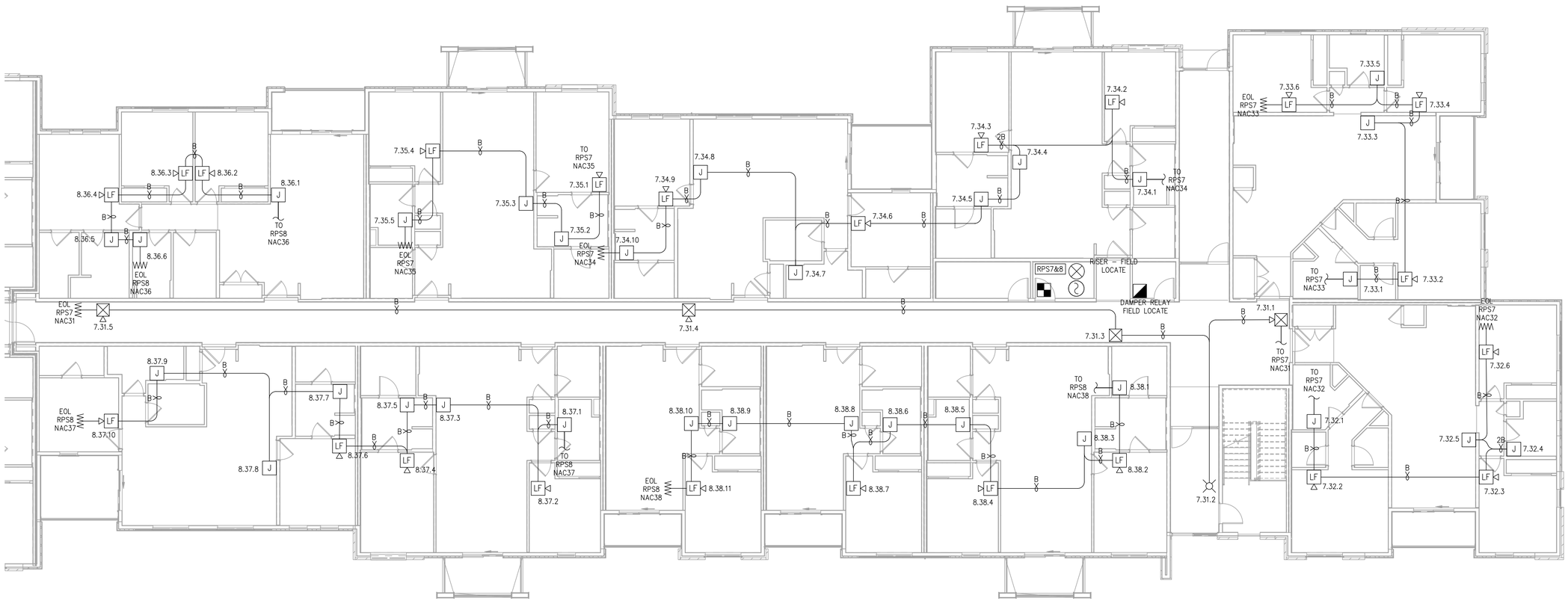

FIRE ALARM PLAN - BUILDING 1 - FLOOR 2 - AREA C

1

SCALE : 1/8" = 1-0'

JSC ENGINEERS

MO COA NO. 2012006786 / KS COA NO. E-2818
1925 CENTRAL ST. SUITE #201
KANSAS CITY, MO 64108
phone: (816) 272-5289
email: jsmothers@jscengineers.com

STATE OF MISSOURI
JESSEY P. BORRIS
NUMBER PE-2019041526
PROFESSIONAL ENGINEER

04-13-2022

FIRE ALARM CONTRACTOR:

SIG

SYSTEM INTEGRATION GROUP

PROJECT:

SIGNATURE AT PRYOR II

2100 AND 2150 NW LOWENSTEIN DR.
LEE'S SUMMIT, MISSOURI 64081

REVISIONS:	DATE / DESCRIPTION
1	
2	
3	
4	
5	

Copyright 2022
JSC Engineers

ISSUED:

PERMIT

SHEET TITLE:

FIRE ALARM PLANS

DATE: 04.13.2022
JOB NO.: 22-094
SHEET:

FA106

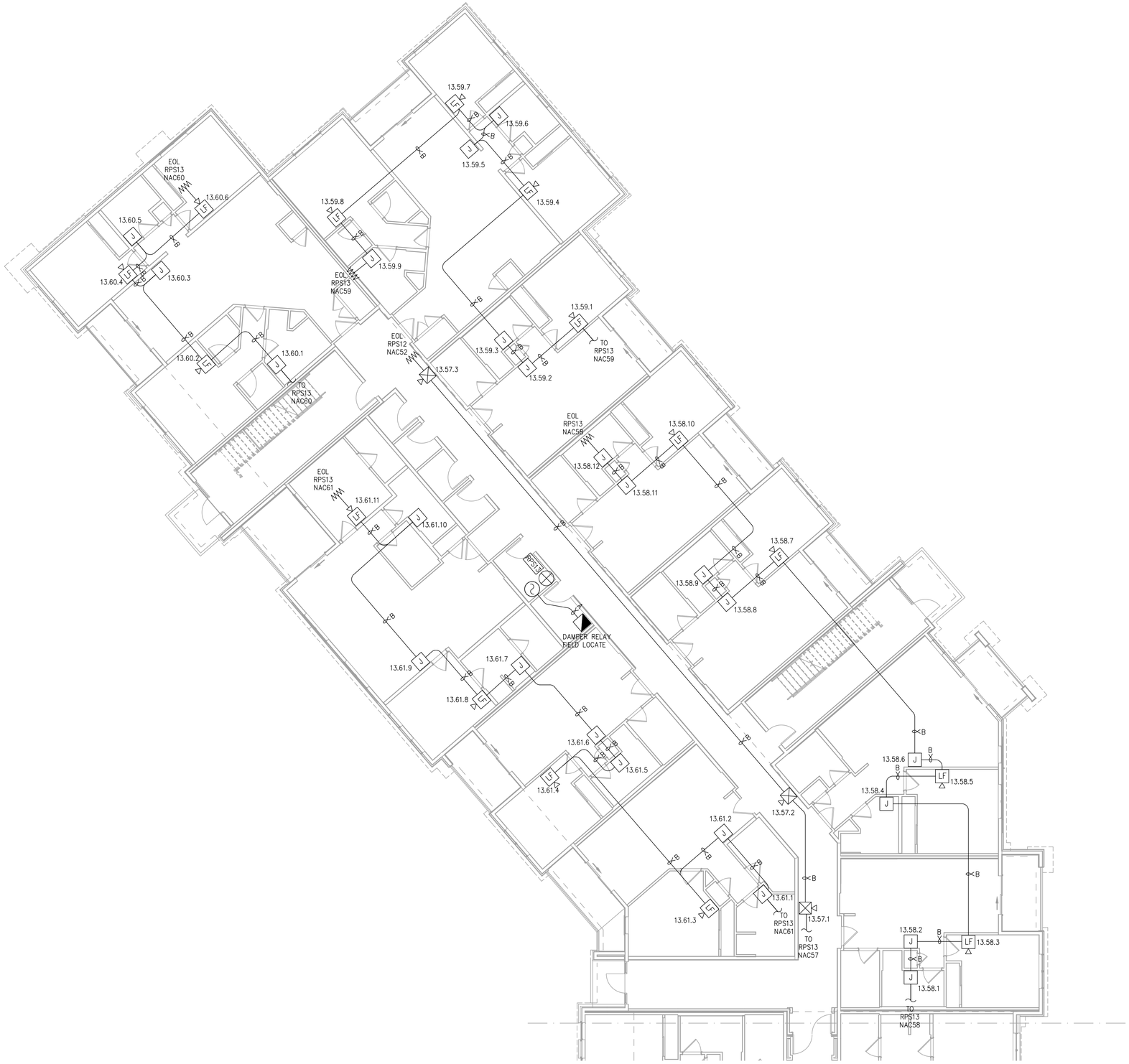

FIRE ALARM PLAN - BUILDING 1 - FLOOR 3 - AREA A

1

SCALE : 1/8" = 1-0'

JSC ENGINEERS

MO COA NO. 2012006786 / KS COA NO. E-2818
1925 CENTRAL ST. SUITE #201
KANSAS CITY, MO 64108
phone: (816) 272-5289
email: jsmothers@jscengineers.com

STATE OF MISSOURI
JESSEY P. BORRIS
NUMBER
PE-2019041526
PROFESSIONAL ENGINEER

04-13-2022

FIRE ALARM CONTRACTOR:

SIG
SYSTEM INTEGRATION GROUP

PROJECT:

SIGNATURE AT PRYOR II

2100 AND 2150 NW LOWENSTEIN DR.
LEE'S SUMMIT, MISSOURI 64081

REVISIONS:	DATE / DESCRIPTION
1	
2	
3	
4	
5	

Copyright 2022
JSC Engineers

ISSUED:

PERMIT

SHEET TITLE:

FIRE ALARM PLANS

DATE: 04.13.2022
JOB NO.: 22-094
SHEET:

FA107

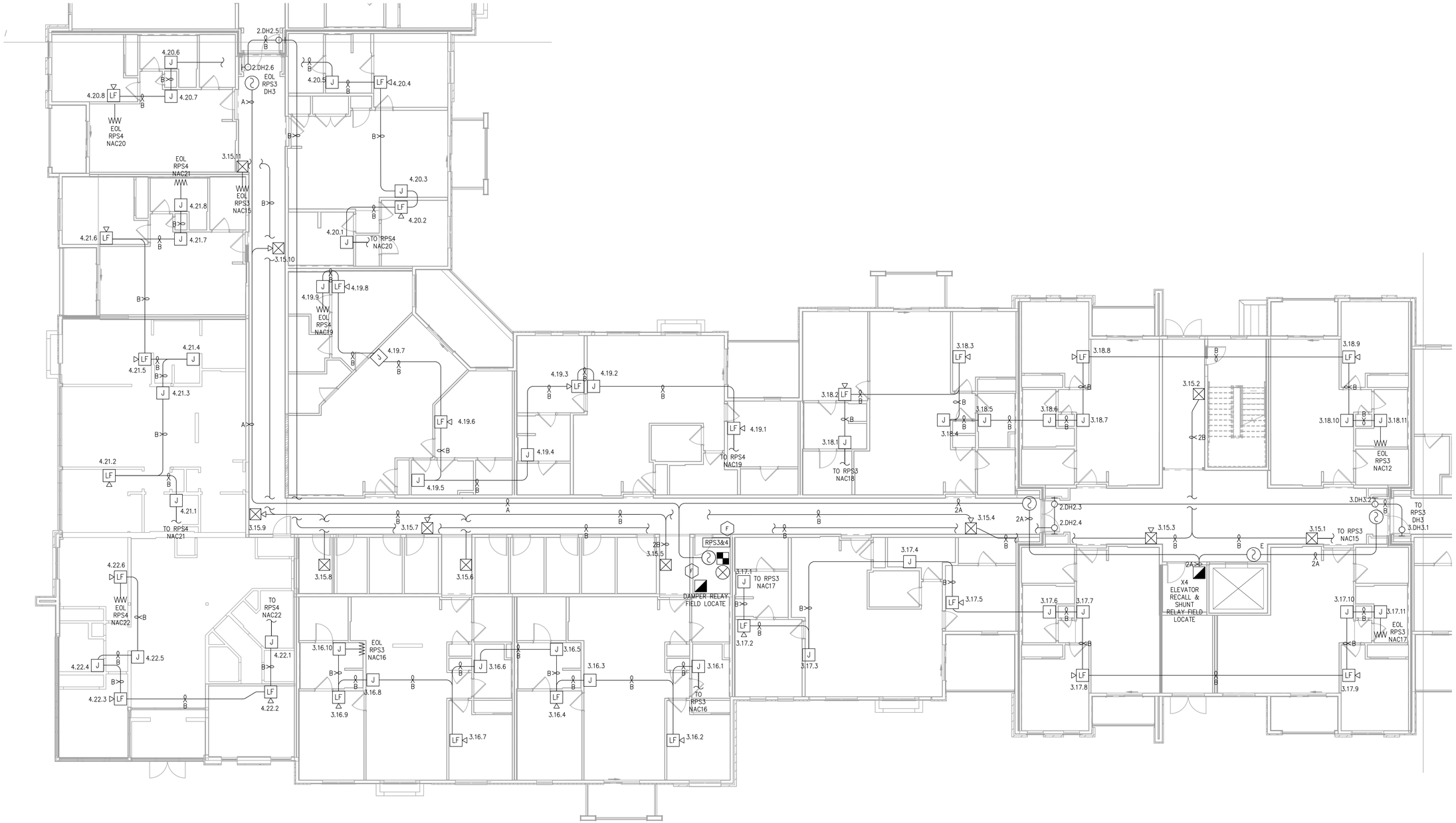

FIRE ALARM PLAN - BUILDING 1 - FLOOR 3 - AREA B

1

SCALE : 1/8" = 1-0'

JSC ENGINEERS

MO COA NO. 2012006786 / KS COA NO. E-2818
1925 CENTRAL ST. SUITE #201
KANSAS CITY, MO 64108
phone: (816) 272-5289
email: jsmothers@jscengineers.com

STATE OF MISSOURI
JESSEY P. MORRIS
NUMBER PE-2019041526
PROFESSIONAL ENGINEER

04-13-2022

FIRE ALARM CONTRACTOR:

SIG

SYSTEM INTEGRATION GROUP

PROJECT:

SIGNATURE AT PRYOR II
2100 AND 2150 NW LOWENSTEIN DR.
LEE'S SUMMIT, MISSOURI 64081

REVISIONS:	DATE / DESCRIPTION
1	
2	
3	
4	
5	

Copyright 2022
JSC Engineers

ISSUED:

PERMIT

SHEET TITLE:

FIRE ALARM PLANS

DATE: 04.13.2022
JOB NO.: 22-094
SHEET:

FA108

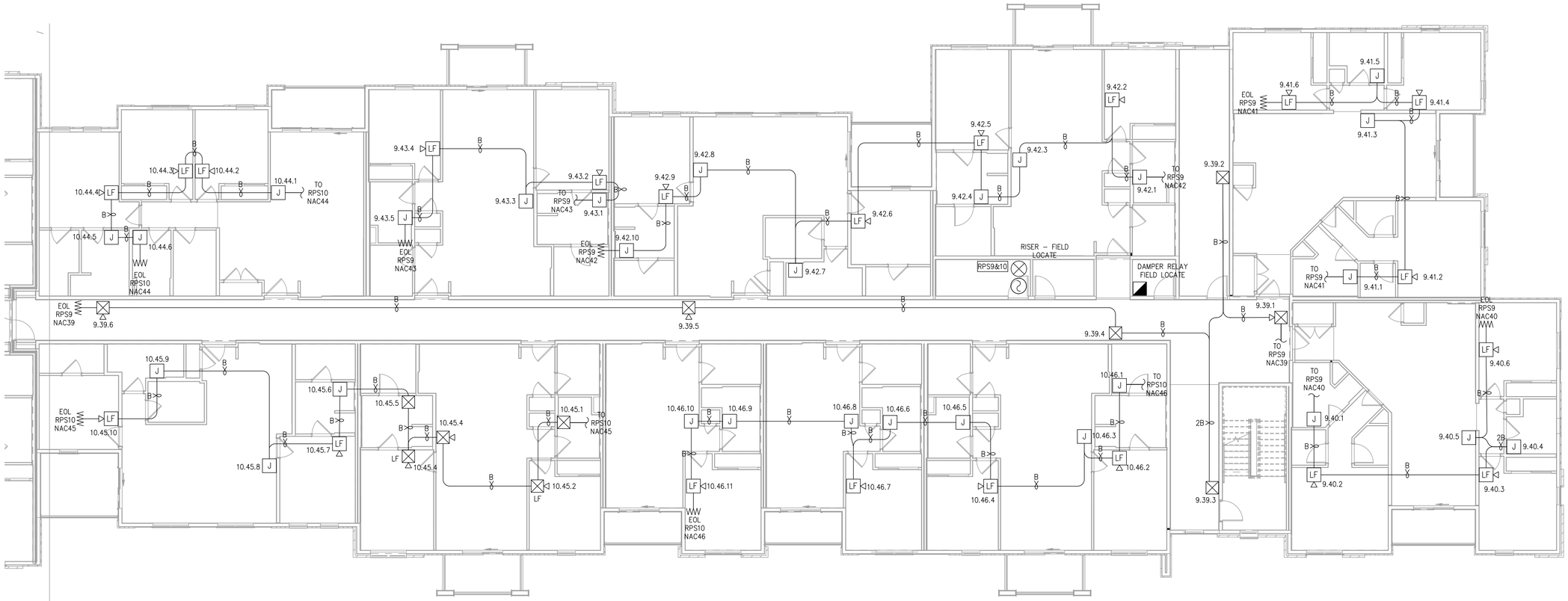

FIRE ALARM PLAN - BUILDING 1 - FLOOR 3 - AREA C

1

SCALE : 1/8" = 1-0'

JSC ENGINEERS

MO COA NO. 2012006786 / KS COA NO. E-2818
1925 CENTRAL ST. SUITE #201
KANSAS CITY, MO 64108
phone: (816) 272-5289
email: jsmothers@jscengineers.com

STATE OF MISSOURI
JESSEY P. MORRIS
NUMBER PE-2019041526
PROFESSIONAL ENGINEER

04-13-2022

FIRE ALARM CONTRACTOR:

SIG

SYSTEM INTEGRATION GROUP

PROJECT:

SIGNATURE AT PRYOR II

2100 AND 2150 NW LOWENSTEIN DR.
LEE'S SUMMIT, MISSOURI 64081

REVISIONS:	DATE / DESCRIPTION
1	
2	
3	
4	
5	

Copyright 2022
JSC Engineers

ISSUED:

PERMIT

SHEET TITLE:

FIRE ALARM PLANS

DATE: 04.13.2022
JOB NO.: 22-094
SHEET:

FA109

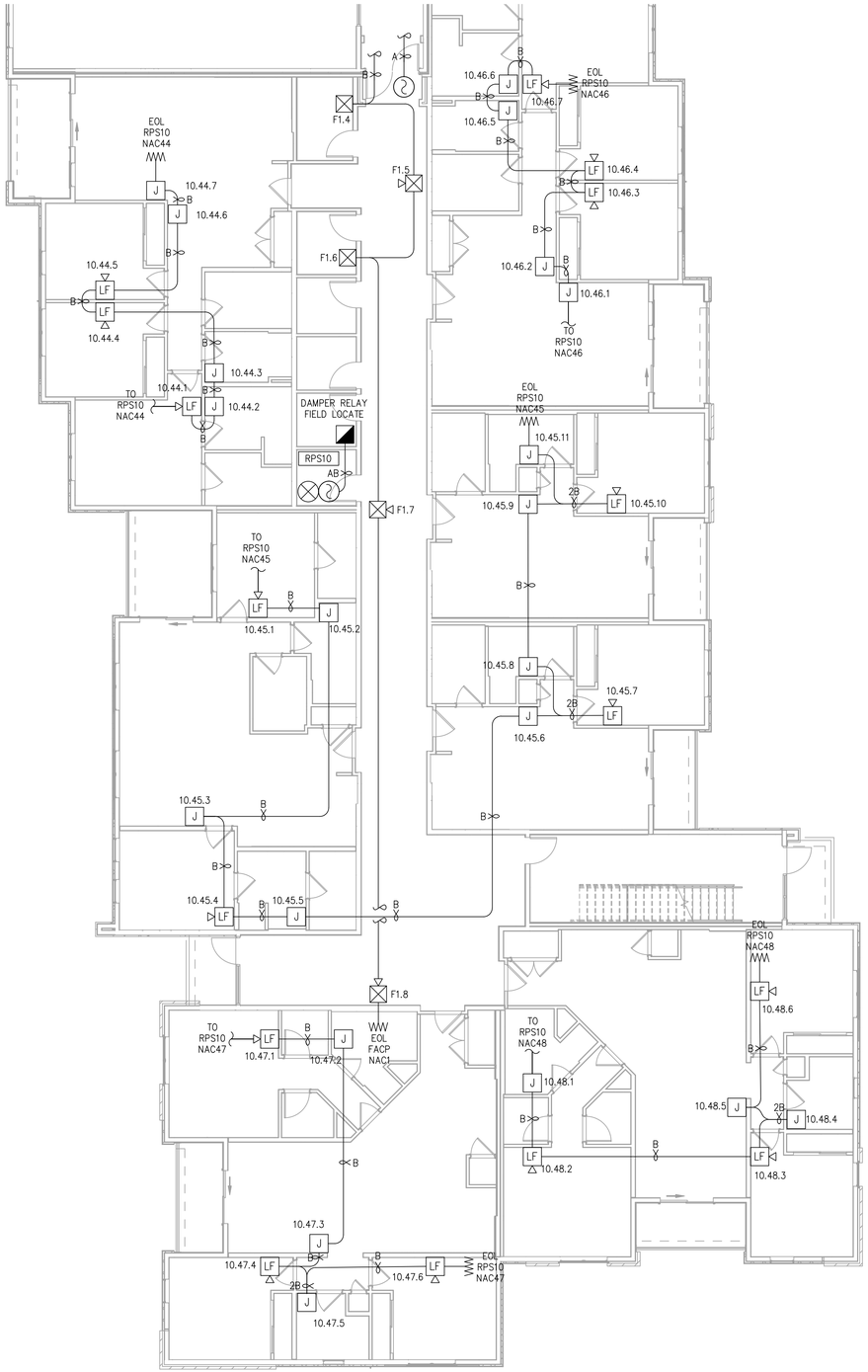

FIRE ALARM PLAN - BUILDING 2 - FLOOR 1 - AREA A

1

SCALE : 1/8" = 1-0'

JSC ENGINEERS
MO COA NO. 2012006786 / KS COA NO. E-2818
1925 CENTRAL ST. SUITE #201
KANSAS CITY, MO 64108
phone: (816) 272-5289
email: jsmothers@jscengineers.com

STATE OF MISSOURI
JESSEY P. MORRIS
NUMBER
PE-2019041526
PROFESSIONAL ENGINEER
04-13-2022

FIRE ALARM CONTRACTOR:

SIG
SYSTEM INTEGRATION GROUP

PROJECT:
SIGNATURE AT PRYOR II
2100 AND 2150 NW LOWENSTEIN DR.
LEE'S SUMMIT, MISSOURI 64081

REVISIONS:	DATE / DESCRIPTION
1	
2	
3	
4	
5	

Copyright 2022
JSC Engineers

ISSUED:
PERMIT

SHEET TITLE:
FIRE ALARM PLANS

DATE: 04.13.2022
JOB NO.: 22-094
SHEET:
FA110

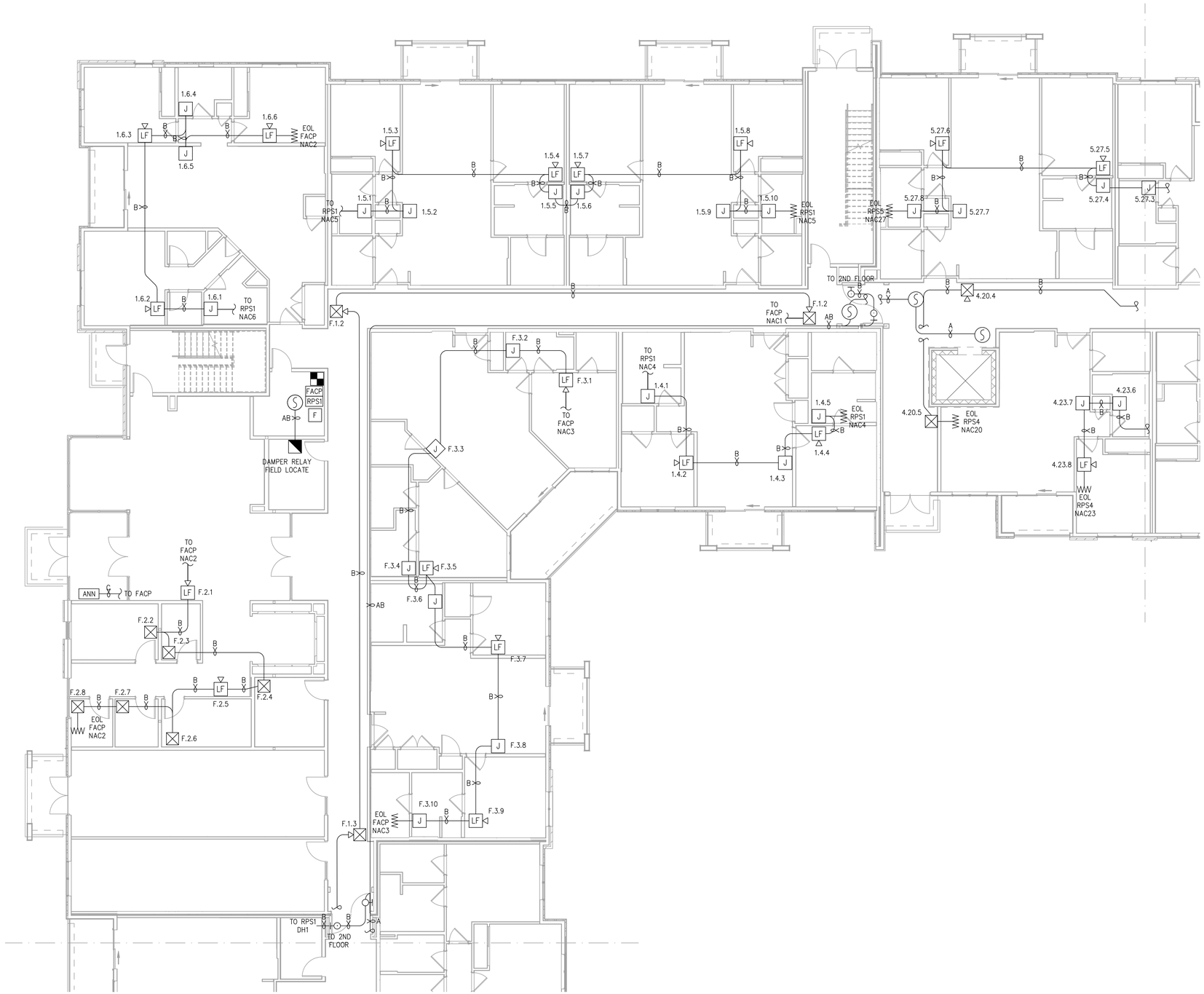

FIRE ALARM PLAN - BUILDING 2 - FLOOR 1 - AREA B

SCALE : 1/8" = 1-0'

1

JSC ENGINEERS
MO COA NO. 2012006786 / KS COA NO. E-2818
1925 CENTRAL ST. SUITE #201
KANSAS CITY, MO 64108
phone: (816) 272-5289
email: jsmothers@jscengineers.com

STATE OF MISSOURI
JESSEY P. SMORRIS
NUMBER PE-2019041526
PROFESSIONAL ENGINEER
04-13-2022

FIRE ALARM CONTRACTOR:

SIG
SYSTEM INTEGRATION GROUP

PROJECT:
SIGNATURE AT PRYOR II
2100 AND 2150 NW LOWENSTEIN DR.
LEE'S SUMMIT, MISSOURI 64081

REVISIONS:	DATE / DESCRIPTION
1	
2	
3	
4	
5	

Copyright 2022
JSC Engineers

ISSUED:
PERMIT

SHEET TITLE:
FIRE ALARM PLANS

DATE: 04.13.2022
JOB NO.: 22-094
SHEET:
FA111

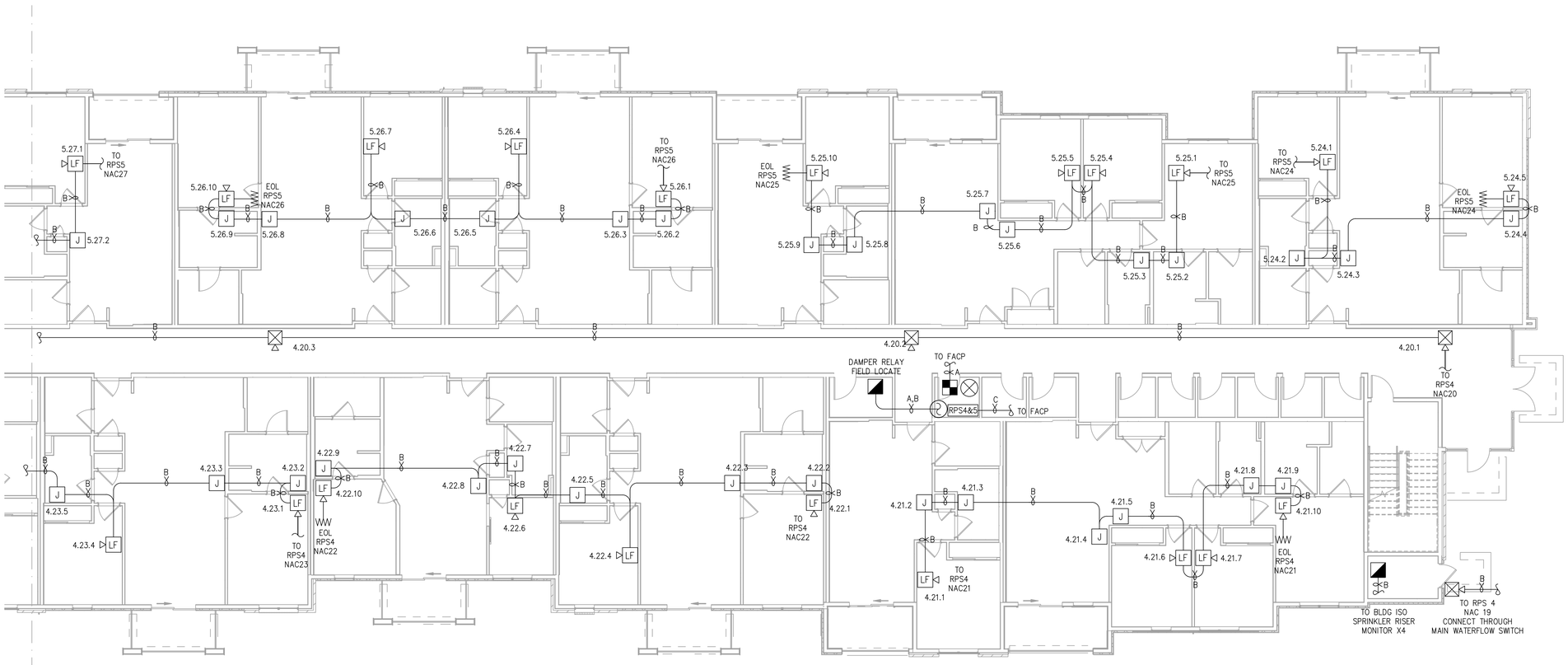

FIRE ALARM PLAN - BUILDING 2 - FLOOR 1 - AREA C

1

SCALE : 1/8" = 1-0'

JSC ENGINEERS

MO COA NO. 2012006786 / KS COA NO. E-2818
1925 CENTRAL ST. SUITE #201
KANSAS CITY, MO 64108
phone: (816) 272-5289
email: jsmothers@jscengineers.com

STATE OF MISSOURI
JESSEY P. MORRIS
NUMBER PE-2019041526
PROFESSIONAL ENGINEER

04-13-2022

FIRE ALARM CONTRACTOR:

SIG

SYSTEM INTEGRATION GROUP

PROJECT:

SIGNATURE AT PRYOR II

2100 AND 2150 NW LOWENSTEIN DR.
LEE'S SUMMIT, MISSOURI 64081

REVISIONS:	DATE / DESCRIPTION
1	
2	
3	
4	
5	

Copyright 2022
JSC Engineers

ISSUED:

PERMIT

SHEET TITLE:

FIRE ALARM PLANS

DATE: 04.13.2022
JOB NO.: 22-094
SHEET:

FA112

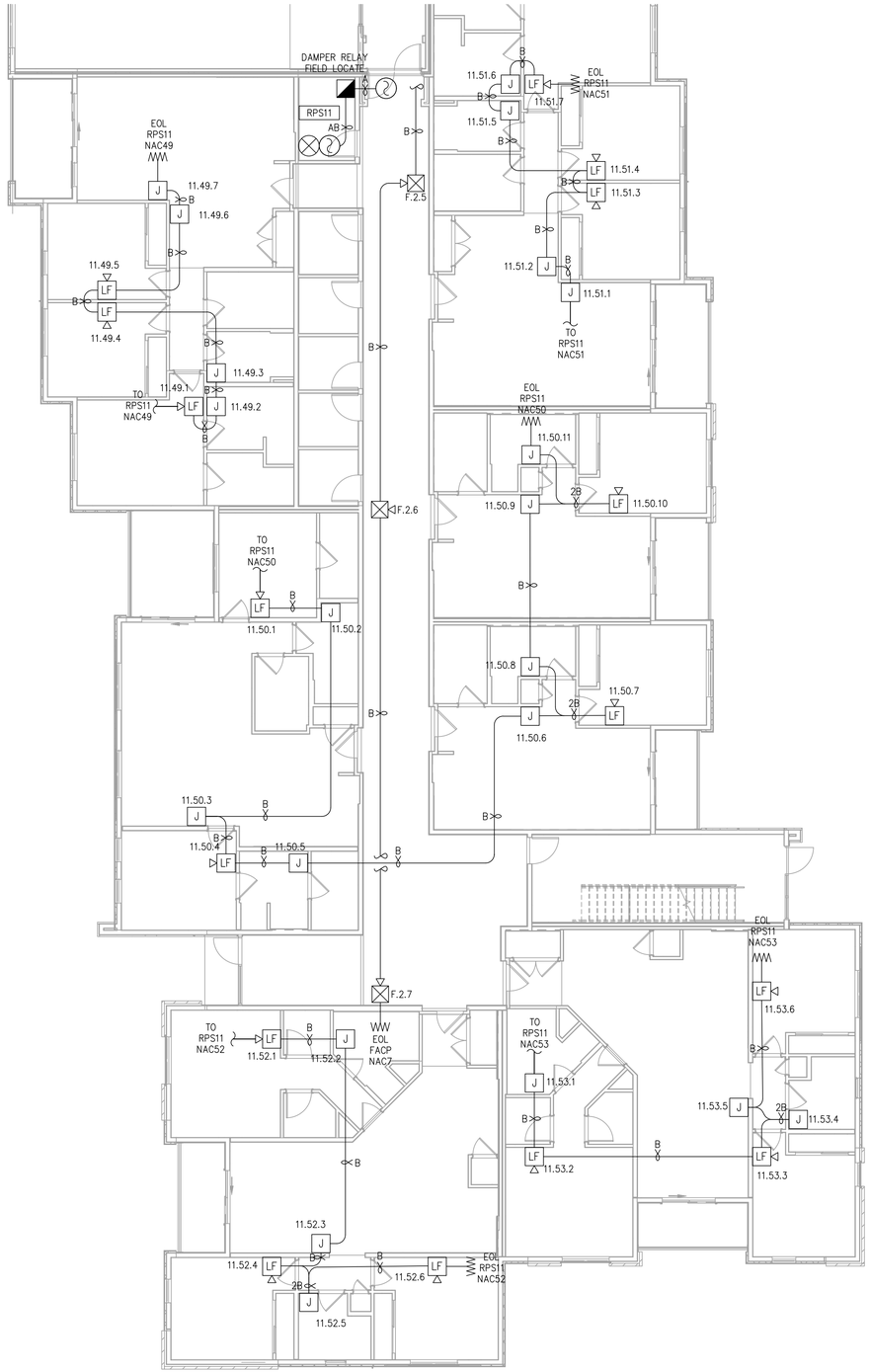

FIRE ALARM PLAN - BUILDING 2 - FLOOR 2 - AREA A

1

SCALE : 1/8" = 1-0'

JSC ENGINEERS
MO COA NO. 2012006786 / KS COA NO. E-2818
1925 CENTRAL ST. SUITE #201
KANSAS CITY, MO 64108
phone: (816) 272-5289
email: jsmothers@jscengineers.com

STATE OF MISSOURI
JESSEY P. MORRIS
NUMBER
PE-2019041526
PROFESSIONAL ENGINEER

04-13-2022

FIRE ALARM CONTRACTOR:

SIG
SYSTEM INTEGRATION GROUP

PROJECT:
SIGNATURE AT PRYOR II
2100 AND 2150 NW LOWENSTEIN DR.
LEE'S SUMMIT, MISSOURI 64081

REVISIONS:	DATE / DESCRIPTION
1	
2	
3	
4	
5	

Copyright 2022
JSC Engineers

ISSUED:
PERMIT

SHEET TITLE:
FIRE ALARM PLANS

DATE: 04.13.2022
JOB NO.: 22-094
SHEET:
FA113

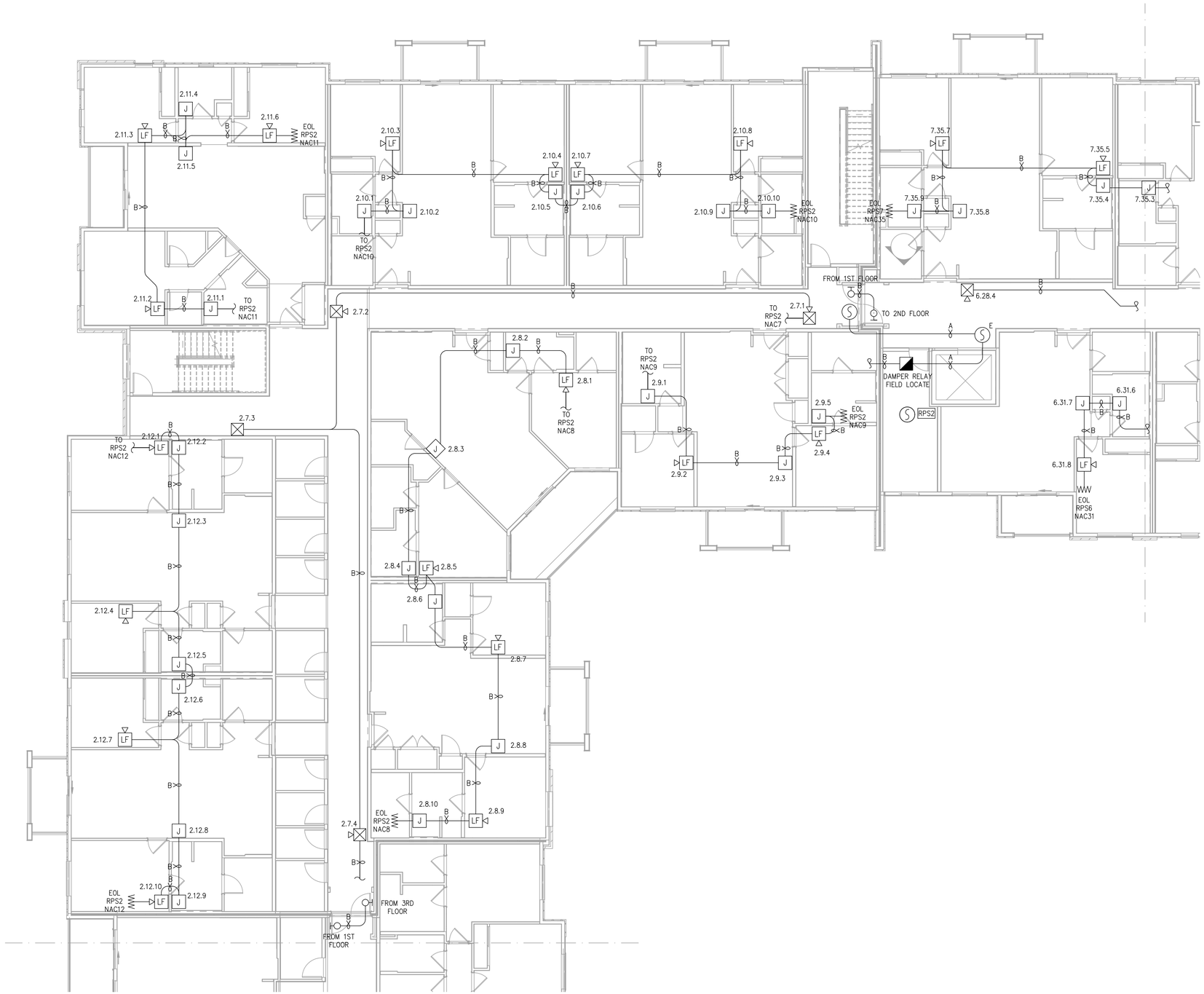

FIRE ALARM PLAN - BUILDING 2 - FLOOR 2 - AREA B

1

SCALE : 1/8" = 1-0'

JSC ENGINEERS

MO COA NO. 2012006786 / KS COA NO. E-2818
1925 CENTRAL ST. SUITE #201
KANSAS CITY, MO 64108
phone: (816) 272-5289
email: jsmothers@jscengineers.com

STATE OF MISSOURI
JESSEY P. SMORRIS
NUMBER PE-2019041526
PROFESSIONAL ENGINEER

04-13-2022

FIRE ALARM CONTRACTOR:

SIG

SYSTEM INTEGRATION GROUP

PROJECT:

SIGNATURE AT PRYOR II

2100 AND 2150 NW LOWENSTEIN DR.
LEE'S SUMMIT, MISSOURI 64081

REVISIONS:	DATE / DESCRIPTION
1	
2	
3	
4	
5	

Copyright 2022
JSC Engineers

ISSUED:

PERMIT

SHEET TITLE:

FIRE ALARM PLANS

DATE: 04.13.2022
JOB NO.: 22-094
SHEET:

FA114

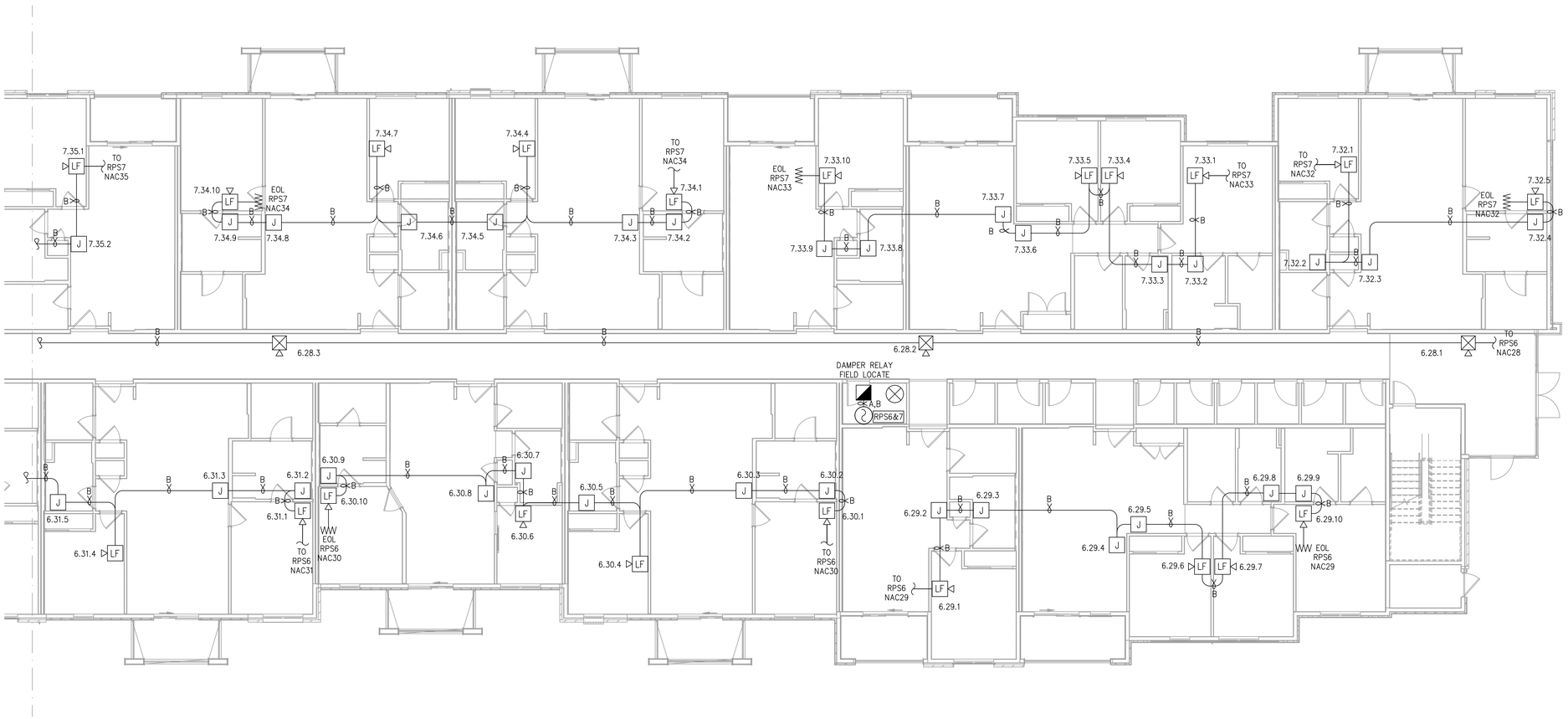

FIRE ALARM PLAN - BUILDING 2 - FLOOR 2 - AREA C

1

SCALE : 1/8" = 1-0'

JSC ENGINEERS

MO COA NO. 2012006786 / KS COA NO. E-2818
1925 CENTRAL ST. SUITE #201
KANSAS CITY, MO 64108
phone: (816) 272-5289
email: jsmothers@jscengineers.com

STATE OF MISSOURI
JESSEY P. MORRIS
NUMBER PE-2019041526
PROFESSIONAL ENGINEER

04-13-2022

FIRE ALARM CONTRACTOR:

SIG

SYSTEM INTEGRATION GROUP

PROJECT:

SIGNATURE AT PRYOR II

2100 AND 2150 NW LOWENSTEIN DR.
LEE'S SUMMIT, MISSOURI 64081

REVISIONS:	DATE / DESCRIPTION
1	
2	
3	
4	
5	

Copyright 2022
JSC Engineers

ISSUED:

PERMIT

SHEET TITLE:

FIRE ALARM PLANS

DATE: 04.13.2022
JOB NO.: 22-094
SHEET:

FA115

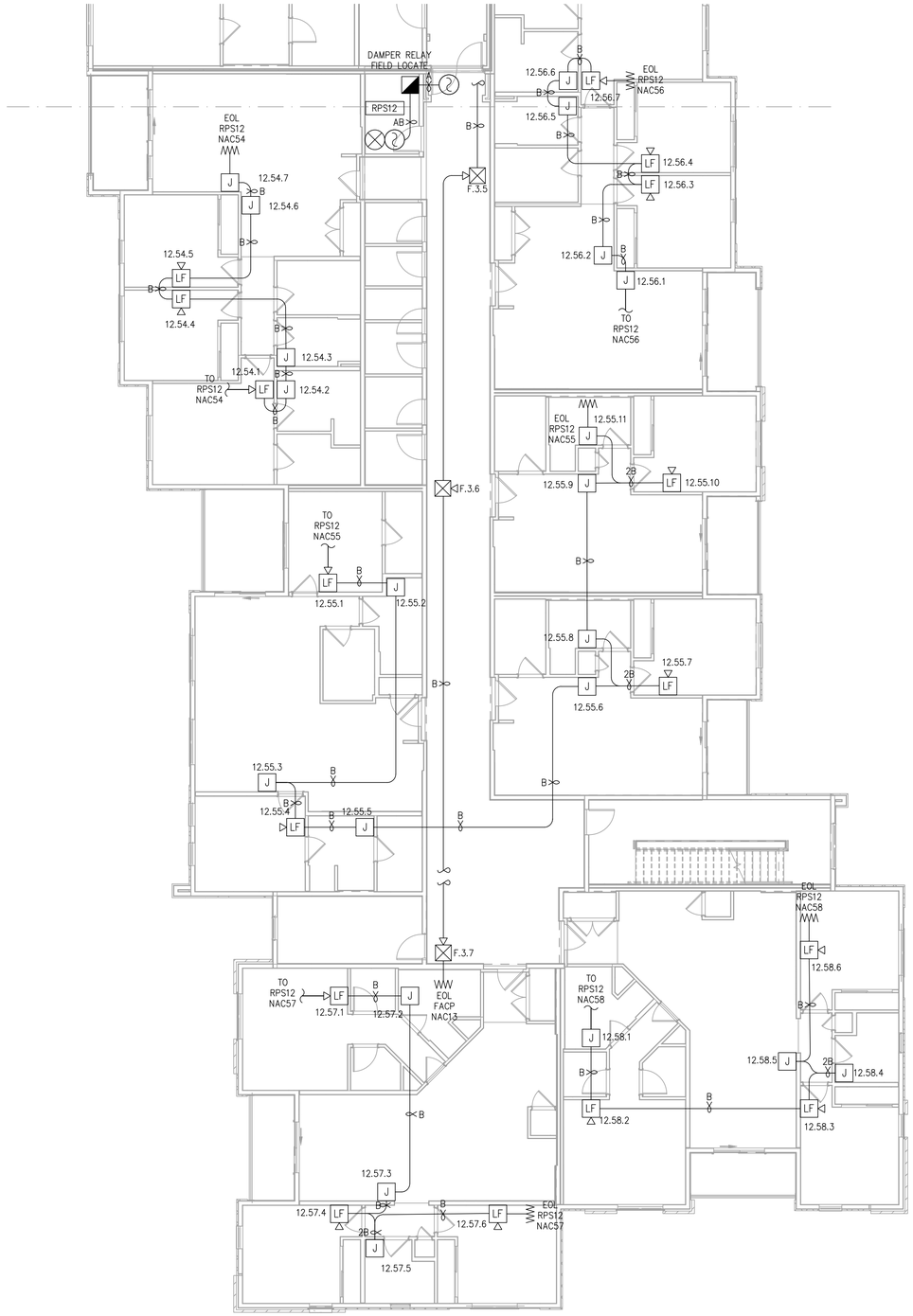

FIRE ALARM PLAN - BUILDING 2 - FLOOR 3 - AREA A

1

SCALE : 1/8" = 1-0'

JSC ENGINEERS
MO COA NO. 2012006786 / KS COA NO. E-2818
1925 CENTRAL ST. SUITE #201
KANSAS CITY, MO 64108
phone: (816) 272-5289
email: jsmothers@jscengineers.com

STATE OF MISSOURI
JESSEY P. MORRIS
NUMBER
PE-2019041526
PROFESSIONAL ENGINEER

04-13-2022

FIRE ALARM CONTRACTOR:

SIG
SYSTEM INTEGRATION GROUP

PROJECT:
SIGNATURE AT PRYOR II
2100 AND 2150 NW LOWENSTEIN DR.
LEE'S SUMMIT, MISSOURI 64081

REVISIONS:	DATE / DESCRIPTION
1	
2	
3	
4	
5	

Copyright 2022
JSC Engineers

ISSUED:
PERMIT

SHEET TITLE:
FIRE ALARM PLANS

DATE: 04.13.2022
JOB NO.: 22-094
SHEET:
FA116

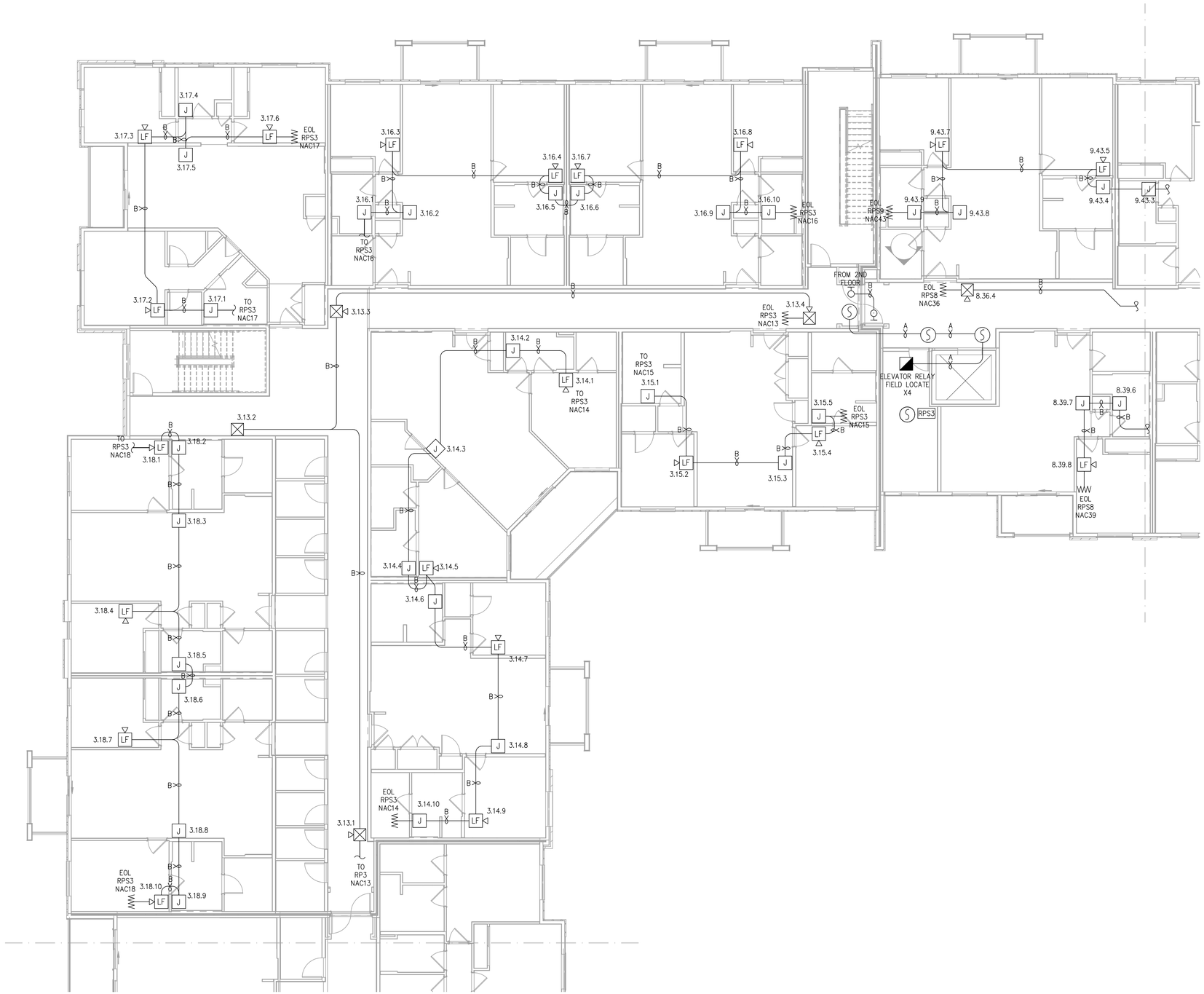

FIRE ALARM PLAN - BUILDING 2 - FLOOR 3 - AREA B

SCALE : 1/8" = 1-0'

1

JSC ENGINEERS
MO COA NO. 2012006786 / KS COA NO. E-2818
1925 CENTRAL ST. SUITE #201
KANSAS CITY, MO 64108
phone: (816) 272-5289
email: jsmothers@jscengineers.com

STATE OF MISSOURI
JESSEY P. BORRIS
NUMBER PE-2019041526
PROFESSIONAL ENGINEER
04-13-2022

FIRE ALARM CONTRACTOR:

SIG
SYSTEM INTEGRATION GROUP

PROJECT:
SIGNATURE AT PRYOR II
2100 AND 2150 NW LOWENSTEIN DR.
LEE'S SUMMIT, MISSOURI 64081

REVISIONS:	DATE / DESCRIPTION
1	
2	
3	
4	
5	

Copyright 2022
JSC Engineers

ISSUED:
PERMIT

SHEET TITLE:
FIRE ALARM PLANS

DATE: 04.13.2022
JOB NO.: 22-094
SHEET:
FA117

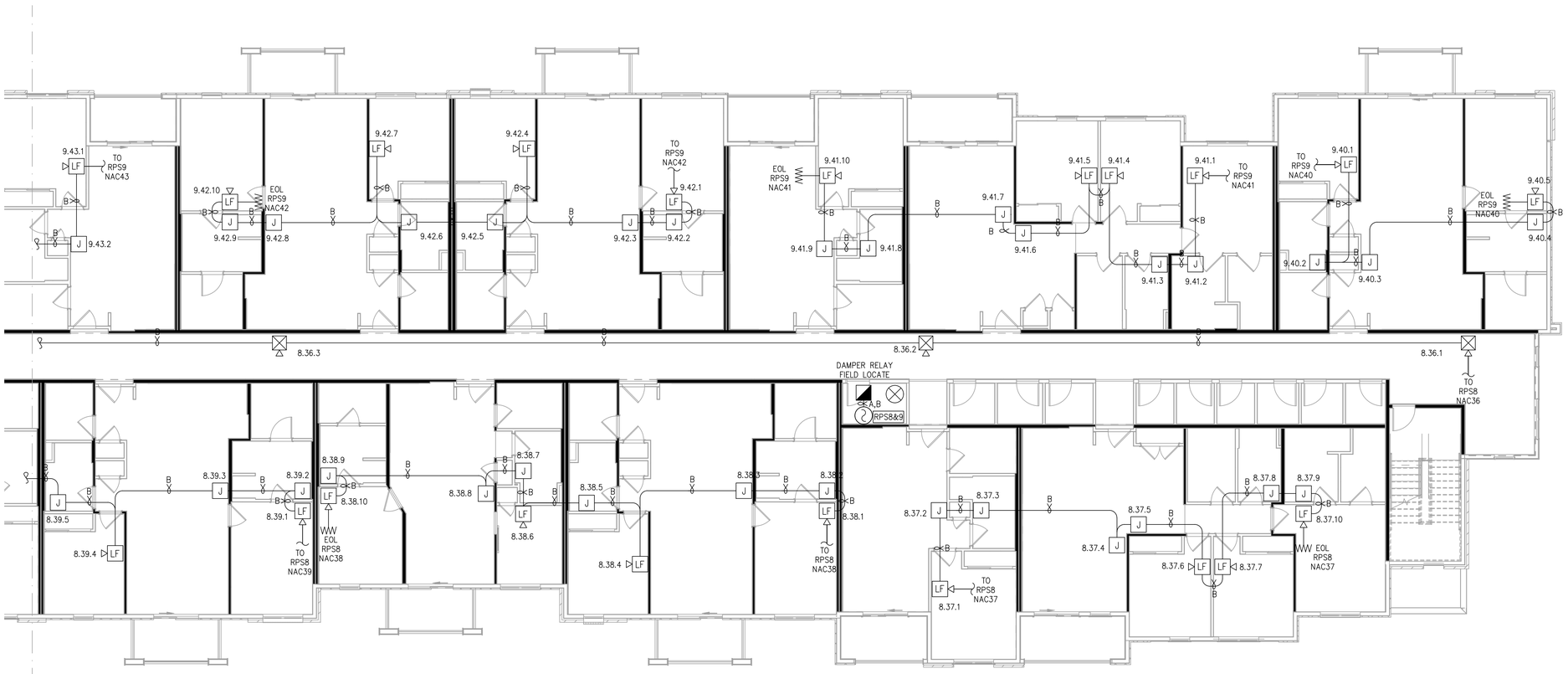

FIRE ALARM PLAN - BUILDING 2 - FLOOR 3 - AREA C

1

SCALE : 1/8" = 1-0'

JSC ENGINEERS

MO COA NO. 2012006786 / KS COA NO. E-2818
1925 CENTRAL ST. SUITE #201
KANSAS CITY, MO 64108
phone: (816) 272-5289
email: jsmothers@jscengineers.com

STATE OF MISSOURI
JESSEY P. MORRIS
NUMBER PE-2019041526
PROFESSIONAL ENGINEER

04-13-2022

FIRE ALARM CONTRACTOR:

SIG

SYSTEM INTEGRATION GROUP

PROJECT:

SIGNATURE AT PRYOR II

2100 AND 2150 NW LOWENSTEIN DR.
LEE'S SUMMIT, MISSOURI 64081

REVISIONS:	DATE / DESCRIPTION
1	
2	
3	
4	
5	

Copyright 2022
JSC Engineers

ISSUED:

PERMIT

SHEET TITLE:

FIRE ALARM PLANS

DATE: 04.13.2022
JOB NO.: 22-094
SHEET:

FA118

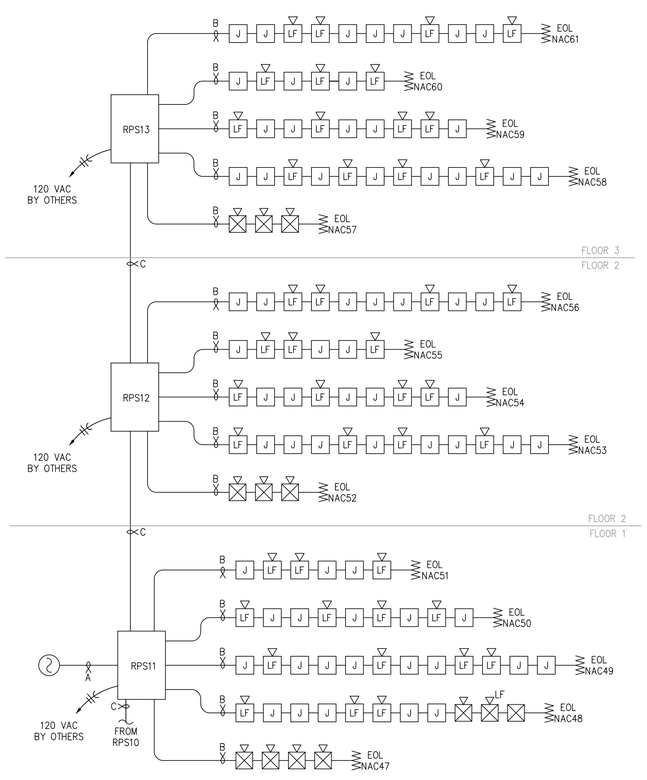

RISER - BUILDING 1 - AREA A (3)

SCALE : N/A

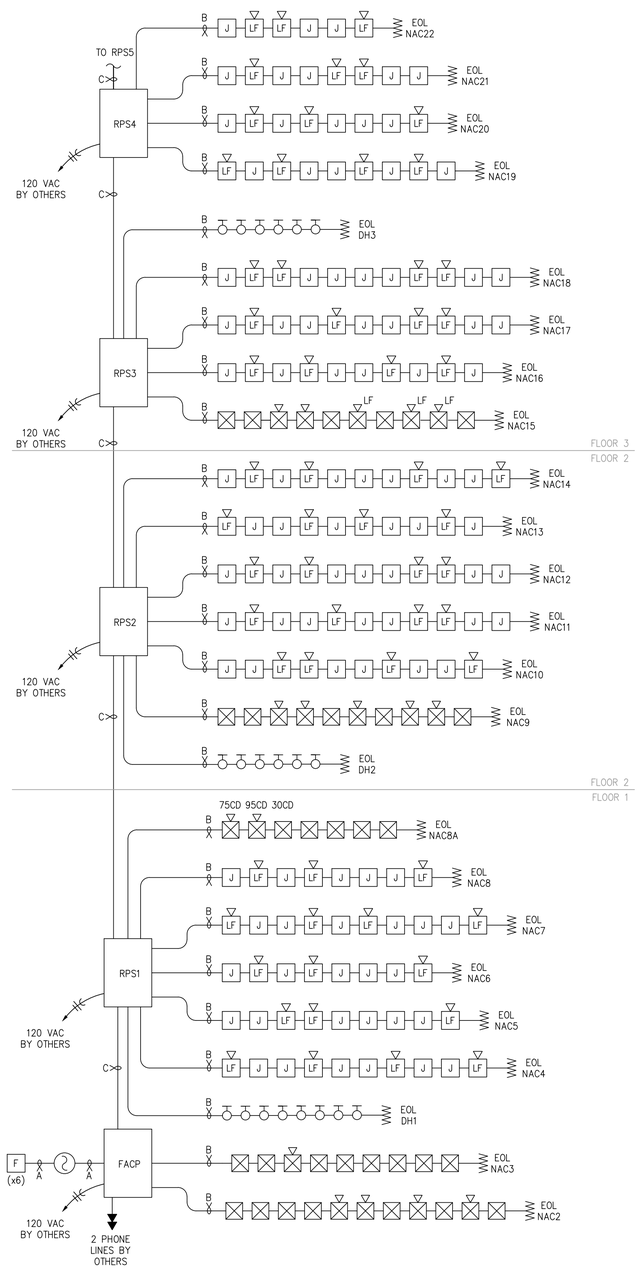

RISER - BUILDING 1 - AREA B (2)

SCALE : N/A

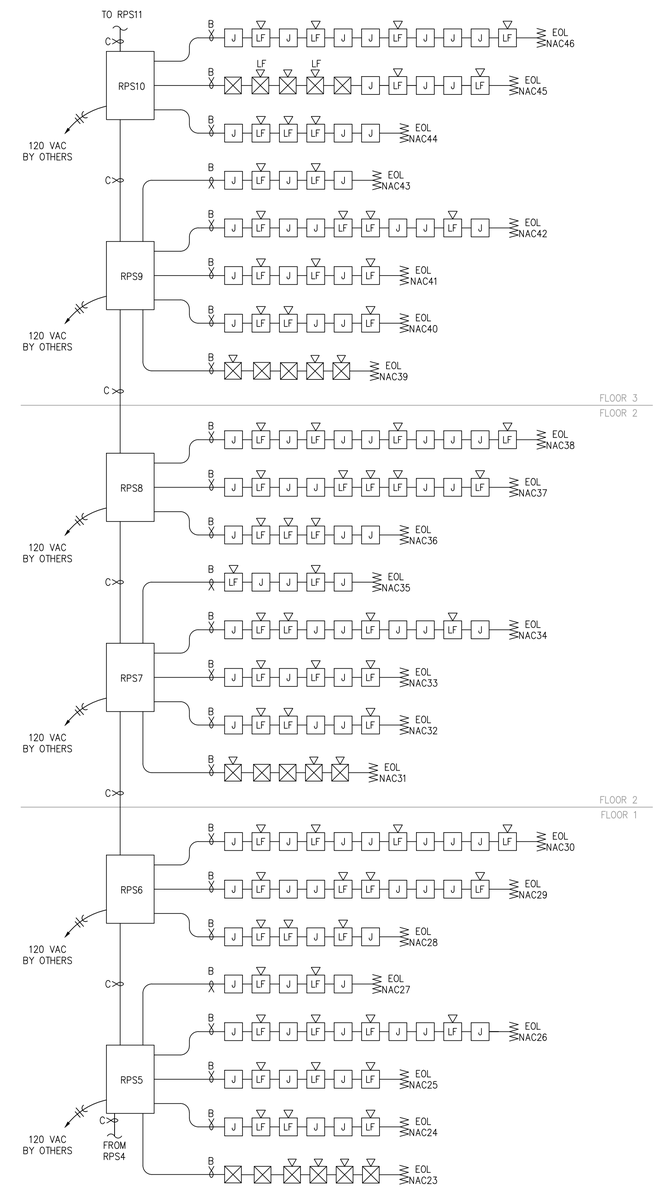

RISER - BUILDING 1 - AREA C (1)

SCALE : N/A

JSC ENGINEERS
MO COA NO. 2012006786 / KS COA NO. E-2818
1925 CENTRAL ST. SUITE #201
KANSAS CITY, MO 64108
phone: (816) 272-5289
email: jsmothers@jscengineers.com

DATE OF INSPECTION
JESSEY P. BORRIS
NUMBER PE-2019041526
PROFESSIONAL ENGINEER
04-13-2022

FIRE ALARM CONTRACTOR:

SIG
SYSTEM INTEGRATION GROUP

PROJECT:
SIGNATURE AT PRYOR II
2100 AND 2150 NW LOWENSTEIN DR.
LEE'S SUMMIT, MISSOURI 64081

REVISIONS:	DATE / DESCRIPTION
1	
2	
3	
4	
5	

Copyright 2022
JSC Engineers

ISSUED:
PERMIT

SHEET TITLE:
FIRE ALARM RISERS

DATE: 04.13.2022
JOB NO.: 22-094
SHEET:
FA201

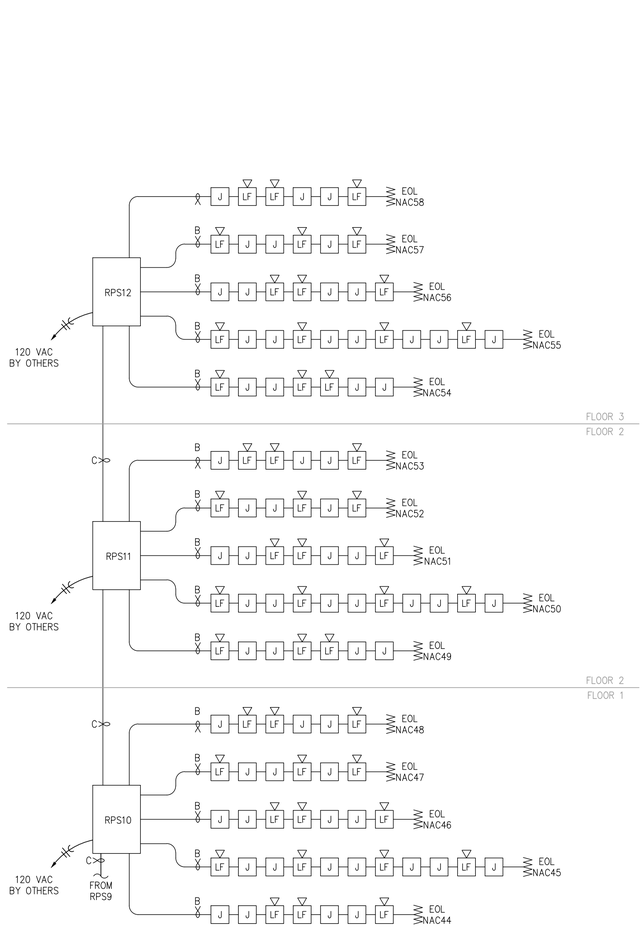

RISER - BUILDING 2 - AREA A (3)

SCALE : N/A

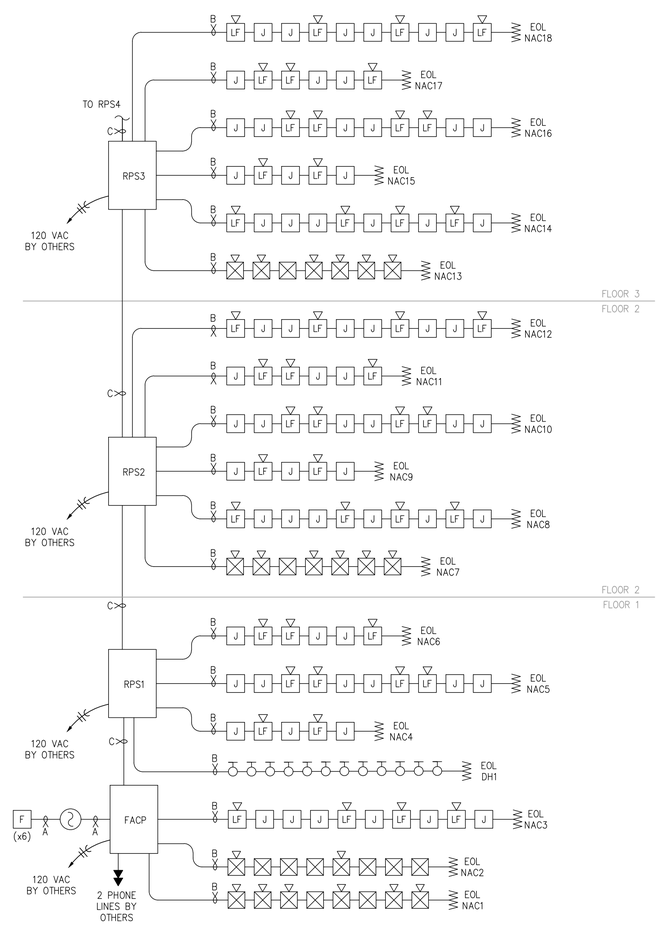

RISER - BUILDING 2 - AREA B (2)

SCALE : N/A

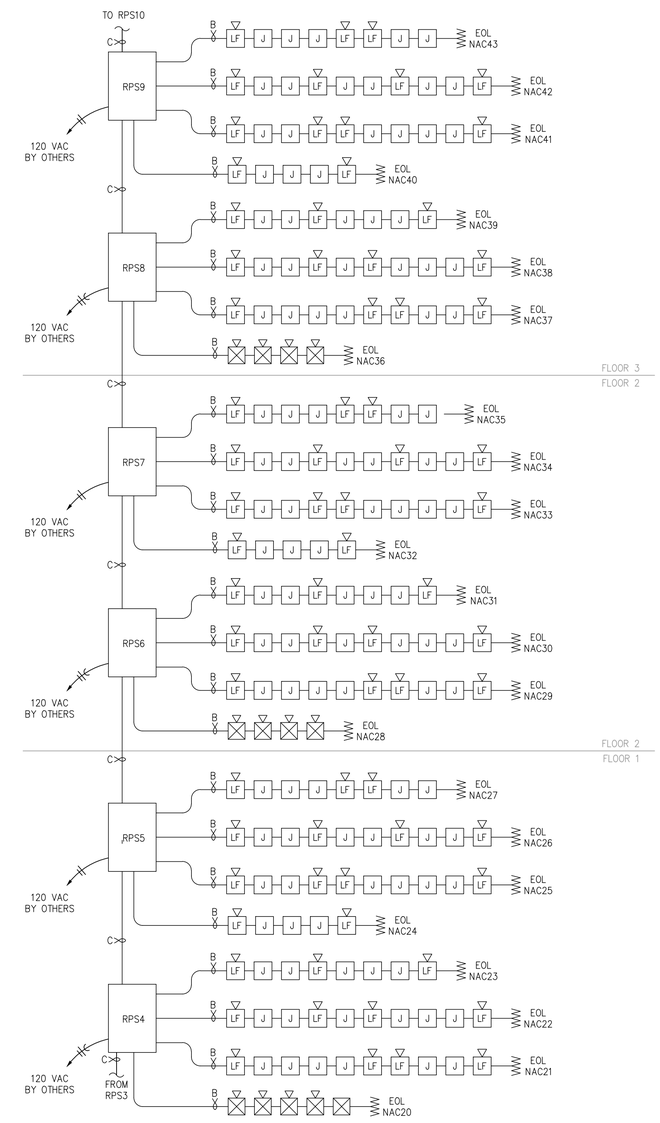

RISER - BUILDING 2 - AREA C (1)

SCALE : N/A

JSC ENGINEERS
MO COA NO. 2012006786 / KS COA NO. E-2818
1925 CENTRAL ST. SUITE #201
KANSAS CITY, MO 64108
phone: (816) 272-5289
email: jsmothers@jscengineers.com

STATE OF MISSOURI
JESSEY P. MORRIS
NUMBER PE-2019041526
PROFESSIONAL ENGINEER
04-13-2022

FIRE ALARM CONTRACTOR:

SIG
SYSTEM INTEGRATION GROUP

PROJECT:
SIGNATURE AT PRYOR II
2100 AND 2150 NW LOWENSTEIN DR.
LEE'S SUMMIT, MISSOURI 64081

REVISIONS:	DATE / DESCRIPTION
1	
2	
3	
4	
5	

Copyright 2022
JSC Engineers

ISSUED:
PERMIT

SHEET TITLE:
FIRE ALARM PLANS

DATE: 04.13.2022
JOB NO.: 22-094
SHEET:
FA202

Honeywell — THE POWER OF CONNECTED — Farenhyt Series

IFP-300 Battery Calculation FACP

Secondary Power Source Requirements

Device Type	Standby Current (amps) Qty		Current Draw		Total	Secondary Alarm Current (amps) Qty		Current Draw		Total
1. Control Panel										
IFP-300 Control Panel	1	x	0.190000	=	0.190000	1	x	0.250000	=	0.250000
2. Addressable SLC Devices										
IDP-PHOTO	0	x	0.000300	=		0	x	0.000300	=	
IDP-PHOTO-T	0	x	0.000300	=		0	x	0.000300	=	
IDP-PHOTOR	0	x	0.000300	=		0	x	0.000300	=	
IDP-ION	0	x	0.000300	=		0	x	0.000300	=	
IDP-HEAT	0	x	0.000300	=		0	x	0.000300	=	
IDP-HEAT-HT	0	x	0.000300	=		0	x	0.000300	=	
IDP-HEAT-ROR	0	x	0.000300	=		0	x	0.000300	=	
IDP-BEAM	0	x	0.002000	=		0	x	0.002000	=	
IDP-BEAM-T	0	x	0.002000	=		0	x	0.002000	=	
IDP-FIRE-CO	0	x	0.030000	=		0	x	0.007200	=	
IDP-ACCLIMATE	0	x	0.000300	=		0	x	0.000300	=	
3. Addressable SLC Detectors										
IDP-CONTROL	0	x	0.000375	=		0	x	0.000375	=	
IDP-MONITOR	5	x	0.000375	=	0.001875	5	x	0.000375	=	0.001875
IDP-MINIMON	0	x	0.000375	=		0	x	0.000375	=	
IDP-PULL-SA	0	x	0.000375	=		0	x	0.000375	=	
IDP-PULL-DA	1	x	0.000375	=	0.000375	1	x	0.000375	=	0.000375
IDP-MONITOR-2	0	x	0.000750	=		0	x	0.000750	=	
IDP-MONITOR-10	0	x	0.003500	=		0	x	0.003500	=	
IDP-RELAY-6	0	x	0.001450	=		0	x	0.001450	=	
IDP-CONTROL-6	0	x	0.002250	=		0	x	0.002250	=	
IDP-RELAY	13	x	0.000255	=	0.003315	13	x	0.000255	=	0.003315
IDP-RELAYMON-2	0	x	0.001300	=		0	x	0.024000	=	
IDP-ZONE	0	x	0.002000	=		0	x	0.002000	=	
IDP-ZONE-6	0	x	0.002000	=		0	x	0.002000	=	
4. SLC Accessories										
B200S	0	x	0.000300	=		0	x	0.000300	=	
B200S-LF	0	x	0.003000	=		0	x	0.000300	=	
B200SR	0	x	0.000300	=		0	x	0.000300	=	
B200SR-LF	0	x	0.001000	=		0	x	0.125000	=	
B224RB	0	x	0.000500	=		0	x	0.000500	=	
RTS151KEY	0	x	0.000000	=		0	x	0.007500	=	
RA100Z	0	x	0.000000	=		0	x	0.010000	=	
5. Auxiliary Power Draw - SLC Devices										
IDP-CONTROL (Aux. Power)	0	x	0.001700	=		0	x	0.007000	=	
IDP-CONTROL-6 (Aux. Power)	0	x	0.008000	=		0	x	0.020000	=	
IDP-ZONE (Aux. Power)	0	x	0.012000	=		0	x	0.090000	=	
IDP-ZONE-6 (Aux. Power)	0	x	0.050000	=		0	x	0.270000	=	
B200S (Aux. Power)	0	x	0.000500	=		0	x	0.035000	=	
B200S-LF (Aux. Power)	0	x	0.000550	=		0	x	0.140000	=	
B200SR (Aux. Power)	0	x	0.000500	=		0	x	0.035000	=	
B200SR-LF (Aux. Power)	0	x	0.001000	=		0	x	0.125000	=	
6. SLC Isolator Devices										
IDP-ISO	5	x	0.000450	=	0.002250	5	x	0.000450	=	0.002250
B224BI	0	x	0.000500	=		0	x	0.000500	=	
7. Accessory Modules										
RA-2000	0	x	0.025000	=		0	x	0.050000	=	
RA-2000GRAY	0	x	0.025000	=		0	x	0.050000	=	
6815	0	x	0.078000	=		0	x	0.078000	=	
RA-100	0	x	0.020000	=		0	x	0.025000	=	
RA-1000	1	x	0.020000	=	0.020000	1	x	0.025000	=	0.025000
RA-1000R	0	x	0.020000	=		0	x	0.025000	=	
5824	0	x	0.045000	=		0	x	0.045000	=	
5496	0	x	0.010000	=		0	x	0.010000	=	
RPS-1000	2	x	0.010000	=	0.020000	2	x	0.010000	=	0.020000
5865-4	0	x	0.035000	=		0	x	0.145000	=	
5865-3	0	x	0.035000	=		0	x	0.145000	=	
5880	0	x	0.035000	=		0	x	0.200000	=	
5883	0	x	0.000000	=		0	x	0.220000	=	
8. Network Cards										
SK-NIC	1	x	0.021000	=	0.021000	1	x	0.021000	=	0.021000
SK-FML	0	x	0.053000	=		0	x	0.053000	=	
SK-FSL	1	x	0.079000	=	0.079000	1	x	0.079000	=	0.079000
9. Auxiliary Devices										
IPDACT-2	0	x	0.093000	=		0	x	0.136000	=	
IPDACT-2UD	0	x	0.098000	=		0	x	0.155000	=	
CELL-MOD	1	x	0.055000	=	0.055000	1	x	0.100000	=	0.100000
CELL-CAB-SK	0	x	0.055000	=		0	x	0.100000	=	
10. Miscellaneous Devices										
Conventional Detectors	0	x	0.000000	=		0	x	0.000000	=	
R-10E	10	x	0.020000	=	0.200000	10	x	0.020000	=	0.200000
DH24120FPC	1	x	0.020000	=	0.020000	1	x	0.000000	=	0.000000
IDP-HEAT-W	1	x	0.000300	=	0.000300	1	x	0.000000	=	0.000000
IDP-PHOTO-W	21	x	0.000300	=	0.006300	21	x	0.000000	=	0.000000
Miscellaneous Device 5	0	x	0.000000	=		0	x	0.000000	=	
11. Output Circuits										
NAC 1			0.000000	=				0.221000	=	0.221000
NAC 2			0.000000	=				0.593000	=	0.593000
NAC 3			0.000000	=				0.974000	=	0.974000
Constant-Power 1			0.000000	=				0.000000	=	
				Total Standby Load	**0.619415**				**Total Alarm Load**	**2.490815**

Honeywell — THE POWER OF CONNECTED — Farenhyt Series

IFP-300 Battery Calculation FACP

Note 1: You are fully responsible for verifying these calculations.
Note 2: Use the dropdowns in the **yellow** cells to enter values.

Calculation in Total Sheet

			Required Standby Time in Hours		
			24 Hours		
Standby Load Current	**0.61941 Amps**	x	24	=	14.866 AH
			Required Alarm Time in Minutes		
			5 Minutes		
Alarm Load Current (Amps)	**2.49081 Amps**	x	0.084	=	0.209 AH
			Total Current Load		**15.075 AH**
	Multiply by the Derating Factor		1.2	=	x 1.20
			Total Ampere Hours Required		**18.09 AH**

Recommended Batteries: BAT-12260 - 26AH Batteries

Battery Check

The batteries can be charged by the IFP-300 Charger.
These batteries will require a RBB, Remote Battery Backbox.

Current Draw Check

Circuit#1 current is within the limitations of the circuit.
Circuit#2 current is within the limitations of the circuit.
Circuit#3 current is within the limitations of the circuit.
Circuit#4 current is within the limitations of the circuit.
IFP-300 Control Panel:
The output current is within the panel's limitations.

Honeywell — THE POWER OF CONNECTED — Farenhyt Series

IFP-300 Circuit Detail FACP

NAC 1

Device	Qty		Non-Alarm Draw		Total	Qty		Alarm Draw		Total
P2RK @ 110 Candela	1	x	0.000000	=	0.000000	1	x	0.221000	=	0.221000
	0	x	0.000000	=		0	x	0.000000	=	
	0	x	0.000000	=		0	x	0.000000	=	
	0	x	0.000000	=		0	x	0.000000	=	
	0	x	0.000000	=		0	x	0.000000	=	
	0	x	0.000000	=		0	x	0.000000	=	
	0	x	0.000000	=		0	x	0.000000	=	
	0	x	0.000000	=		0	x	0.000000	=	
	0	x	0.000000	=		0	x	0.000000	=	
			Total Standby Load		**0.000000**			**Total Alarm Load**		**0.221000**

NAC 2

Device	Qty		Non-Alarm Draw		Total	Qty		Alarm Draw		Total
P2WL @ 15 Candela	4	x	0.000000	=	0.000000	4	x	0.073000	=	0.292000
SWL @ 15 Candela	7	x	0.000000	=	0.000000	7	x	0.043000	=	0.301000
	0	x	0.000000	=		0	x	0.000000	=	
	0	x	0.000000	=		0	x	0.000000	=	
	0	x	0.000000	=		0	x	0.000000	=	
	0	x	0.000000	=		0	x	0.000000	=	
	0	x	0.000000	=		0	x	0.000000	=	
	0	x	0.000000	=		0	x	0.000000	=	
	0	x	0.000000	=		0	x	0.000000	=	
	0	x	0.000000	=		0	x	0.000000	=	
			Total Standby Load		**0.000000**			**Total Alarm Load**		**0.593000**

NAC 3

Device	Qty		Non-Alarm Draw		Total	Qty		Alarm Draw		Total
SWL @ 15 Candela	8	x	0.000000	=	0.000000	8	x	0.043000	=	0.344000
P2WL @ 15 Candela	1	x	0.000000	=	0.000000	1	x	0.073000	=	0.073000
	0	x	0.000000	=		0	x	0.139000	=	
	0	x	0.000000	=		0	x	0.160000	=	
	0	x	0.000000	=		0	x	0.000000	=	
	0	x	0.000000	=		0	x	0.000000	=	
	0	x	0.000000	=		0	x	0.000000	=	
	0	x	0.000000	=		0	x	0.000000	=	
	0	x	0.000000	=		0	x	0.000000	=	
	0	x	0.000000	=		0	x	0.000000	=	
			Total Standby Load		**0.000000**			**Total Alarm Load**		**0.417000**

Constant-Power 1

Device	Qty		Non-Alarm Draw		Total	Qty		Alarm Draw		Total
R-10E	0	x	0.020000	=		0	x	0.020000	=	
DH24120FPC	0	x	0.020000	=		0	x	0.000000	=	
	0	x	0.000000	=		0	x	0.000000	=	
	0	x	0.000000	=		0	x	0.000000	=	
	0	x	0.000000	=		0	x	0.000000	=	
	0	x	0.000000	=		0	x	0.000000	=	
	0	x	0.000000	=		0	x	0.000000	=	
	0	x	0.000000	=		0	x	0.000000	=	
	0	x	0.000000	=		0	x	0.000000	=	
	0	x	0.000000	=		0	x	0.000000	=	
			Total Standby Load		**0.000000**			**Total Alarm Load**		**0.000000**

Honeywell — THE POWER OF CONNECTED — Farenhyt Series

IFP-300 EOL Voltage Drop FACP

Starting Voltage	20.4 Volts
Minimum Voltage @ EOL	16 Volts
Voltage Drop Warning %	10.00%

Circuit Name	Current Draw Amps	Wire Type AWG	Resistance Ohms/1000 ft.	Length Feet (One Way)	Actual Resistance Ohms	Voltage @ EOL Volts	Percent Drop Percent
NAC 1	0.221	#14 Solid	3.07	190	1.17	20.14	1.26%
NAC 2	0.593	#14 Solid	3.07	520	3.19	18.51	9.28%
NAC 3	0.417	#14 Solid	3.07	180	1.11	19.94	2.26%
Constant-Power 1	0.000	#12 Solid	1.93	0	0.00	20.40	0.00%

Resistance Table

Wire Type AWG	Resitance Ohms/1000 ft.
#10 Solid	1.21
#10 Stranded	1.24
#12 Solid	1.93
#12 Stranded	1.98
#14 Solid	3.07
#14 Stranded	3.14
#16 Solid	4.89
#16 Stranded	4.99
#18 Solid	7.77
#18 Stranded	7.95

Note: All Resistance values are taken from Table 8 Conductor Properties of the NFPA 70 National Electrical Code. All values are for Direct Current Resistance at 75°C (167°F).

BATTERY CALCS - BLDG 1

SCALE : N/A

1

	CONTROL UNIT ANNUNCIATION								NOTIFICATION						REQ FIRE SAFETY CONTROL					
	ACTUATE ALARM SIGNAL INDICATOR	ACTUATE AUDIBLE ALARM SIGNAL	ACTUATE SUPERVISORY SIGNAL	ACTUATE AUDIBLE SUPERVISORY SIGNAL	ACTUATE COMMON TROUBLE SIGNAL INDICATOR	ACTUATE AUDIBLE COMMON TROUBLE SIGNAL	ACTUATE HORN / STROBE	DISPLAY CHANGE OF STATUS	TRANSMIT FIRE ALARM SIGNAL TO FIRE STATION	TRANSMIT SUPERVISORY SIGNAL TO SUPERVISING STATION	TRANSMIT TROUBLE SIGNAL TO SUPERVISING STATION	RELEASE MAGNETICALLY HELD SMOKE DOORS	RECALL ELEVATOR TO FIRST FLOOR	RECALL ELEVATOR TO ALTERNATE FLOOR	SHUTDOWN ALL RTUS MAU AND FURNACE	UNLOCK FRONT DOOR	ACTUATE ELEVATOR SHUNT TRIP			
MANUAL PULL STATION																				
SMOKE DETECTORS																				
DUCT DETECTOR																				
MONITOR WATERFLOW SWITCH																				
MONITOR TAMPER SWITCHES																				
LOSS POWER TO FACP																				
GROUND FAULT																				

FA MATRIX

SCALE : N/A

4

FA SYMBOLS & LEGEND

- HORN / STROBE CEILING MOUNT, XXcd PER PLANS.
- STROBE CEILING MOUNT, XXcd PER PLANS.
- WALL HORN STROBE, XXcd PER PLANS.
- WALL STROBE, XXcd PER PLANS.
- WALL MOUNTED HORN
- LF — WALL HORN STROBE, LOW FREQUENCY, 15cd UNLESS NOTED OTHERW
- LF — LOW FREQUENCY HORN
- J — WALL JUNCTION BOX
- RELAY MODULE
- MONITOR MODULE
- F — MANUAL PULL STATION
- F — FLOW SWITCH
- T — TAMPER SWITCH
- SMOKE DETECTOR
- DUCT SMOKE DETECTOR
- HEAT DETECTOR
- RISER
- FACP — FIRE ALARM CONTROL PANEL
- RPS# — REMOTE POWER SUPPLY
- ANN — ANNUNCIATOR PANEL
- A — 18/2 FPLP SLC CIRCUIT
- B — 14/2 FPLP NAC CIRCUIT
- C — 18/4 FPLP SBUS CIRCUIT

CODE INFORMATION

APPLICABLE CODES:

- BUILDING CODE – 2018 INTERNATIONAL BUILDING CODE
- ELECTRICAL CODE – 2017 NEC
- FIRE CODE – 2018 IFC (INCLUDING REFERENCED NFPA CODE)
- NFPA 72–2016

JSC ENGINEERS
MO COA NO. 2012006786 / KS COA NO. E-2818
1925 CENTRAL ST. SUITE #201
KANSAS CITY, MO 64108
phone: (816) 272-5289
email: jsmothers@jscengineers.com
STATE OF MISSOURI — JESSEY P. BORRIS — NUMBER PE-2019041526 — PROFESSIONAL ENGINEER
04-13-2022

FIRE ALARM CONTRACTOR:

SIG — SYSTEM INTEGRATION GROUP

PROJECT:
SIGNATURE AT PRYOR II
2100 AND 2150 NW LOWENSTEIN DR.
LEE'S SUMMIT, MISSOURI 64081

REVISIONS: DATE / DESCRIPTION
1
2
3
4
5

Copyright 2022 JSC Engineers

ISSUED:
PERMIT

SHEET TITLE:
CALCS, MATRIX, & SYMBOLS

DATE: 04.13.2022
JOB NO.: 22-094
SHEET:
FA301

7 6 5 4 3 2 1

E D C B A

POTTER — The Symbol of Protection

PSN-106
Battery & Voltage Drop
Calculations

Project Name:	The Signature	**Standby Hours:**	24
		Alarm Mins:	5
Installed By:	System Integration Group	**Safety Margin:**	20%
Designed By:	David Johnson		
Date:	1/11/2022	**NAC Source Voltage:**	20.4

Model #: PSN-106 — **Max Panel Current (amps):** 10
Panel ID: RPS-1
Location: MDP Room

User assumes all responsibility to ensure the quantities and current draw values in this worksheet are accurate prior to submittal.

Panel Qty	Part #	Description	Standby (amps) Each	Standby (amps) Total	Alarm (amps) Each	Alarm (amps) Total
1	PSN-106	NAC Power Expander	0.075	0.075	0.075	0.075
		Panel Standby:	**0.075**		**Panel Alarm:**	**0.075**

NAC Circuits (See NAC Configuration below) Ckt	Use	Description	Class	Standby (amps) Total	Alarm (amps) Total
1	Notification	NAC 4	Class B	0.00000	0.55200
2	Notification	NAC 5	Class B	0.00000	0.41400
3	Notification	NAC 6	Class B	0.00000	0.41400
4	Notification	NAC 7	Class B	0.00000	0.55200
5	Notification	NAC 8	Class B	0.00000	0.41400
6	Notification	NAC 8A	Class B	0.00000	0.53000
AUX	Door Holders	Door Hold		0.00000	0.00000
			NAC Standby:	**0.00000**	**NAC Alarm:** **2.87600**

Battery Calculation Summary

	Standby (amps)		Alarm (amps)
Panel Current:	0.07500		0.07500
NAC Circuit Current:	0.00000		2.87600
Total Standby:	0.075000	**Total Alarm:**	2.95100
Standby Hours:	24	**Alarm Mins:**	5
AH Required:	**1.80**	**AH Required:**	**0.25**
Total Combined Standby & Alarm AmpHours Required:			2.05
		Efficiency Factor:	**20%**
		Required Battery AmpHours:	**2.46**
		Battery AmpHours Provided:	

POTTER — The Symbol of Protection

NAC Circuit Configuration & Voltage Drop *The Signature* *1/11/2022*

NAC 1 — **MAX Circuit Current (amps):** 3 — **Source Voltage Used (VDC):** 20.4
Class: Class B — **Usage:** Notification — **Description:** NAC 4

Wire Type	Ohms/1000ft	Length 1-Way	Actual Ohms	Max Load (amps)	Volts @ EOL	Min Volts Req'd
#14 Solid	3.19	230	1.467	0.552	19.59	16

Circuit Devices Qty	Lookup Type	Description	Standby (amps) Each	Standby (amps) Total	Alarm (amps) Each	Alarm (amps) Total
4	User Defined	S/S HLF	0.000000	0.000000	0.138000	0.552000
1						
		User can add devices on the fly				
		to these bottom 5 rows				
		(No lookup function)				
		Total Standby:	**0.00000**		**Total Alarm:**	**0.55200**

NAC 2 — **MAX Circuit Current (amps):** 3 — **Source Voltage Used (VDC):** 20.4
Class: Class B — **Usage:** Notification — **Description:** NAC 5

Wire Type	Ohms/1000ft	Length 1-Way	Actual Ohms	Max Load (amps)	Volts @ EOL	Min Volts Req'd
#14 Solid	3.19	250	1.595	0.414	19.74	16

Circuit Devices Qty	Lookup Type	Description	Standby (amps) Each	Standby (amps) Total	Alarm (amps) Each	Alarm (amps) Total
3	User Defined	S/S HLF	0.000000	0.000000	0.138000	0.414000
		User can add devices on the fly				
		to these bottom 5 rows				
		(No lookup function)				
		Total Standby:	**0.00000**		**Total Alarm:**	**0.41400**

POTTER — The Symbol of Protection

NAC Circuit Configuration & Voltage Drop (cont'd) *The Signature* *1/11/2022*

NAC 3 — **MAX Circuit Current (amps):** 3 — **Source Voltage Used (VDC):** 20.4
Class: Class B — **Usage:** Notification — **Description:** NAC 6

Wire Type	Ohms/1000ft	Length 1-Way	Actual Ohms	Max Load (amps)	Volts @ EOL	Min Volts Req'd
#14 Solid	3.19	220	1.404	0.414	19.82	16

Circuit Devices Qty	Lookup Type	Description	Standby (amps) Each	Standby (amps) Total	Alarm (amps) Each	Alarm (amps) Total
3	User Defined	S/S HLF	0.000000	0.000000	0.138000	0.414000
		User can add devices on the fly				
		to these bottom 5 rows				
		(No lookup function)				
		Total Standby:	**0.00000**		**Total Alarm:**	**0.41400**

NAC 4 — **MAX Circuit Current (amps):** 3 — **Source Voltage Used (VDC):** 20.4
Class: Class B — **Usage:** Notification — **Description:** NAC 7

Wire Type	Ohms/1000ft	Length 1-Way	Actual Ohms	Max Load (amps)	Volts @ EOL	Min Volts Req'd
#14 Solid	3.19	200	1.276	0.552	19.70	16

Circuit Devices Qty	Lookup Type	Description	Standby (amps) Each	Standby (amps) Total	Alarm (amps) Each	Alarm (amps) Total
4	User Defined	S/S HLF	0.000000	0.000000	0.138000	0.552000
		User can add devices on the fly				
		to these bottom 5 rows				
		(No lookup function)				
		Total Standby:	**0.00000**		**Total Alarm:**	**0.55200**

POTTER — The Symbol of Protection

NAC Circuit Configuration & Voltage Drop (cont'd) *The Signature* *1/11/2022*

NAC 5 — **MAX Circuit Current (amps):** 3 — **Source Voltage Used (VDC):** 20.4
Class: Class B — **Usage:** Notification — **Description:** NAC 8

Wire Type	Ohms/1000ft	Length 1-Way	Actual Ohms	Max Load (amps)	Volts @ EOL	Min Volts Req'd
#14 Solid	3.19	250	1.595	0.414	19.74	16

Circuit Devices Qty	Lookup Type	Description	Standby (amps) Each	Standby (amps) Total	Alarm (amps) Each	Alarm (amps) Total
3	User Defined	S/S HLF	0.000000	0.000000	0.138000	0.414000
		User can add devices on the fly				
		to these bottom 5 rows				
		(No lookup function)				
		Total Standby:	**0.00000**		**Total Alarm:**	**0.41400**

NAC 6 — **MAX Circuit Current (amps):** 3 — **Source Voltage Used (VDC):** 20.4
Class: Class B — **Usage:** Notification — **Description:** NAC 8A

Wire Type	Ohms/1000ft	Length 1-Way	Actual Ohms	Max Load (amps)	Volts @ EOL	Min Volts Req'd
#14 Solid	3.19	240	1.531	0.530	19.59	16

Circuit Devices Qty	Lookup Type	Description	Standby (amps) Each	Standby (amps) Total	Alarm (amps) Each	Alarm (amps) Total
1	User Defined	S S P2L 95cd Temp Low	0.000000	0.000000	0.133000	0.133000
1	User Defined	S S P2L 75 cd Temp High	0.000000	0.000000	0.119000	0.119000
1	User Defined	S S SL 30cd	0.000000	0.000000	0.063000	0.063000
5	User Defined	S S SL 15cd	0.000000	0.000000	0.043000	0.215000
		User can add devices on the fly				
		to these bottom 5 rows				
		(No lookup function)				
		Total Standby:	**0.00000**		**Total Alarm:**	**0.53000**

AUX Power — **MAX Circuit Current (amps):** 3 — **Source Voltage Used (VDC):** 20.4
Usage: Door Holders — **Description:** Door Hold

Wire Type	Ohms/1000ft	Length 1-Way	Actual Ohms	Max Load (amps)	Volts @ Last Device	Min Volts Req'd
#14 Solid	3.19	475	3.031	0.000	20.40	16

Circuit Devices Qty	Lookup Type	Description	Standby (amps) Each	Standby (amps) Total	Alarm (amps) Each	Alarm (amps) Total
0	User Defined	DH	0.040000	0.000000	0.000000	0.000000
		User can add devices on the fly				
		to these bottom 5 rows				
		(No lookup function)				
		Total Standby:	**0.00000**		**Total Alarm:**	**0.00000**

POTTER — The Symbol of Protection

PSN-106
Battery & Voltage Drop
Calculations

Project Name:	The Signature	**Standby Hours:**	24
		Alarm Mins:	5
Installed By:	System Integration Group	**Safety Margin:**	20%
Designed By:	David Johnson		
Date:	1/11/2022	**NAC Source Voltage:**	20.4

Model #: PSN-106 — **Max Panel Current (amps):** 10
Panel ID: RPS-2
Location: 2nd Floor Mech/Elec 240

User assumes all responsibility to ensure the quantities and current draw values in this worksheet are accurate prior to submittal.

Panel Qty	Part #	Description	Standby (amps) Each	Standby (amps) Total	Alarm (amps) Each	Alarm (amps) Total
1	PSN-106	NAC Power Expander	0.075	0.075	0.075	0.075
		Panel Standby:	**0.075**		**Panel Alarm:**	**0.075**

NAC Circuits (See NAC Configuration below) Ckt	Use	Description	Class	Standby (amps) Total	Alarm (amps) Total
1	Notification	NAC 9	Class B	0.00000	0.43700
2	Notification	NAC 10	Class B	0.00000	0.55200
3	Notification	NAC 11	Class B	0.00000	0.55200
4	Notification	NAC 12	Class B	0.00000	0.55200
5	Notification	NAC 13	Class B	0.00000	0.55200
6	Notification	NAC 14	Class B	0.00000	0.55200
AUX	Door Holders	Door Hold		0.00000	0.00000
			NAC Standby:	**0.00000**	**NAC Alarm:** **3.19700**

Battery Calculation Summary

	Standby (amps)		Alarm (amps)
Panel Current:	0.07500		0.07500
NAC Circuit Current:	0.00000		3.19700
Total Standby:	0.075000	**Total Alarm:**	3.27200
Standby Hours:	24	**Alarm Mins:**	5
AH Required:	**1.80**	**AH Required:**	**0.28**
Total Combined Standby & Alarm AmpHours Required:			2.08
		Efficiency Factor:	**20%**
		Required Battery AmpHours:	**2.50**
		Battery AmpHours Provided:	**7**

POTTER — The Symbol of Protection

NAC Circuit Configuration & Voltage Drop *The Signature* *1/11/2022*

NAC 1 — **MAX Circuit Current (amps):** 3 — **Source Voltage Used (VDC):** 20.4
Class: Class B — **Usage:** Notification — **Description:** NAC 9

Wire Type	Ohms/1000ft	Length 1-Way	Actual Ohms	Max Load (amps)	Volts @ EOL	Min Volts Req'd
#14 Solid	3.19	500	3.190	0.437	19.01	16

Circuit Devices Qty	Lookup Type	Description	Standby (amps) Each	Standby (amps) Total	Alarm (amps) Each	Alarm (amps) Total
4	User Defined	S S SL 15cd	0.000000	0.000000	0.043000	0.172000
5	User Defined	System Sensor P2L 15cd Temp Hig	0.000000	0.000000	0.053000	0.265000
		User can add devices on the fly				
		to these bottom 5 rows				
		(No lookup function)				
		Total Standby:	**0.00000**		**Total Alarm:**	**0.43700**

NAC 2 — **MAX Circuit Current (amps):** 3 — **Source Voltage Used (VDC):** 20.4
Class: Class B — **Usage:** Notification — **Description:** NAC 10

Wire Type	Ohms/1000ft	Length 1-Way	Actual Ohms	Max Load (amps)	Volts @ EOL	Min Volts Req'd
#14 Solid	3.19	180	1.148	0.552	19.77	16

Circuit Devices Qty	Lookup Type	Description	Standby (amps) Each	Standby (amps) Total	Alarm (amps) Each	Alarm (amps) Total
4	User Defined	S/S HLF	0.000000	0.000000	0.138000	0.552000
		User can add devices on the fly				
		to these bottom 5 rows				
		(No lookup function)				
		Total Standby:	**0.00000**		**Total Alarm:**	**0.55200**

POTTER — The Symbol of Protection

NAC Circuit Configuration & Voltage Drop (cont'd) *The Signature* *1/11/2022*

NAC 3 — **MAX Circuit Current (amps):** 3 — **Source Voltage Used (VDC):** 20.4
Class: Class B — **Usage:** Notification — **Description:** NAC 11

Wire Type	Ohms/1000ft	Length 1-Way	Actual Ohms	Max Load (amps)	Volts @ EOL	Min Volts Req'd
#14 Solid	3.19	220	1.404	0.552	19.63	16

Circuit Devices Qty	Lookup Type	Description	Standby (amps) Each	Standby (amps) Total	Alarm (amps) Each	Alarm (amps) Total
4	User Defined	S/S HLF	0.000000	0.000000	0.138000	0.552000
		User can add devices on the fly				
		to these bottom 5 rows				
		(No lookup function)				
		Total Standby:	**0.00000**		**Total Alarm:**	**0.55200**

NAC 4 — **MAX Circuit Current (amps):** 3 — **Source Voltage Used (VDC):** 20.4
Class: Class B — **Usage:** Notification — **Description:** NAC 12

Wire Type	Ohms/1000ft	Length 1-Way	Actual Ohms	Max Load (amps)	Volts @ EOL	Min Volts Req'd
#14 Solid	3.19	220	1.404	0.552	19.63	16

Circuit Devices Qty	Lookup Type	Description	Standby (amps) Each	Standby (amps) Total	Alarm (amps) Each	Alarm (amps) Total
4	User Defined	S/S HLF	0.000000	0.000000	0.138000	0.552000
		User can add devices on the fly				
		to these bottom 5 rows				
		(No lookup function)				
		Total Standby:	**0.00000**		**Total Alarm:**	**0.55200**

POTTER — The Symbol of Protection

NAC Circuit Configuration & Voltage Drop (cont'd) *The Signature* *1/11/2022*

NAC 5 — **MAX Circuit Current (amps):** 3 — **Source Voltage Used (VDC):** 20.4
Class: Class B — **Usage:** Notification — **Description:** NAC 13

Wire Type	Ohms/1000ft	Length 1-Way	Actual Ohms	Max Load (amps)	Volts @ EOL	Min Volts Req'd
#14 Solid	3.19	190	1.212	0.552	19.73	16

Circuit Devices Qty	Lookup Type	Description	Standby (amps) Each	Standby (amps) Total	Alarm (amps) Each	Alarm (amps) Total
4	User Defined	S/S HLF	0.000000	0.000000	0.138000	0.552000
		User can add devices on the fly				
		to these bottom 5 rows				
		(No lookup function)				
		Total Standby:	**0.00000**		**Total Alarm:**	**0.55200**

NAC 6 — **MAX Circuit Current (amps):** 3 — **Source Voltage Used (VDC):** 20.4
Class: Class B — **Usage:** Notification — **Description:** NAC 14

Wire Type	Ohms/1000ft	Length 1-Way	Actual Ohms	Max Load (amps)	Volts @ EOL	Min Volts Req'd
#14 Solid	3.19	290	1.850	0.552	19.38	16

Circuit Devices Qty	Lookup Type	Description	Standby (amps) Each	Standby (amps) Total	Alarm (amps) Each	Alarm (amps) Total
4	User Defined	S/S HLF	0.000000	0.000000	0.138000	0.552000
0						
0						
0						
		User can add devices on the fly				
		to these bottom 5 rows				
		(No lookup function)				
		Total Standby:	**0.00000**		**Total Alarm:**	**0.55200**

AUX Power — **MAX Circuit Current (amps):** 3 — **Source Voltage Used (VDC):** 20.4
Usage: Door Holders — **Description:** Door Hold

Wire Type	Ohms/1000ft	Length 1-Way	Actual Ohms	Max Load (amps)	Volts @ Last Device	Min Volts Req'd
#14 Solid	3.19	440	2.807	0.000	20.40	16

Circuit Devices Qty	Lookup Type	Description	Standby (amps) Each	Standby (amps) Total	Alarm (amps) Each	Alarm (amps) Total
0	User Defined	DH	0.040000	0.000000	0.000000	0.000000
		User can add devices on the fly				
		to these bottom 5 rows				
		(No lookup function)				
		Total Standby:	**0.00000**		**Total Alarm:**	**0.00000**

BATTERY CALCS - BLDG 1 (CONT.)

1

SCALE : N/A

JSC ENGINEERS
MO COA NO. 2012006786 / KS COA NO. E-2818
1925 CENTRAL ST. SUITE #201
KANSAS CITY, MO 64108
phone: (816) 272-5289
email: jsmothers@jscengineers.com

STATE OF MISSOURI — JESSEY P. BORRIS — NUMBER PE-2019041526 — PROFESSIONAL ENGINEER
04-13-2022

FIRE ALARM CONTRACTOR:
SIG
SYSTEM INTEGRATION GROUP

PROJECT:
SIGNATURE AT PRYOR II
2100 AND 2150 NW LOWENSTEIN DR.
LEE'S SUMMIT, MISSOURI 64081

REVISIONS:	DATE / DESCRIPTION
1	
2	
3	
4	
5	

Copyright 2022
JSC Engineers

ISSUED:
PERMIT

SHEET TITLE:
BATTERY CALCULATIONS

DATE: 04.13.2022
JOB NO.: 22-094
SHEET:
FA302

POTTER — The Symbol of Protection

PSN-64
Battery & Voltage Drop
Calculations

Project Name:	The Signature	Standby Hours:	24
		Alarm Mins:	5
Installed By:	System Integration Group	Safety Margin:	20%
Designed By:	David Johnson		
Date:	1/1/2021	NAC Source Voltage:	20.4

Model #: PSN-64 — Max Panel Current (amps): 6
Panel ID: RPS-3
Location: 3rd floor HVAC 338

User assumes all responsibility to ensure the quantities and current draw values in this worksheet are accurate prior to submittal.

Panel Qty	Part #	Description	Standby (amps) Each	Standby (amps) Total	Alarm (amps) Each	Alarm (amps) Total
1	PSN-64	NAC Power Expander	0.075	0.075	0.075	0.075
			Panel Standby:	0.075	Panel Alarm:	0.075

NAC Circuits (See NAC Configuration below) Cct	Use	Description	Class	Standby (amps) Total	Alarm (amps) Total
1	Notification	NAC 15	Class B	0.00000	0.48000
2	Notification	NAC 16	Class B	0.00000	0.55200
3	Notification	NAC 17	Class B	0.00000	0.55200
4	Notification	NAC 18	Class B	0.00000	0.55200
AUX				0.00000	0.00000
			NAC Standby:	0.00000	NAC Alarm: 2.13600

Battery Calculation Summary	Standby (amps)		Alarm (amps)
Panel Current:	0.07500		0.07500
NAC Circuit Current:	0.00000		2.13600
Total Standby:	0.075000	Total Alarm:	2.21100
Standby Hours:	24	Alarm Mins:	5
AH Required:	1.80	AH Required:	0.19
Total Combined Standby & Alarm AmpHours Required:			1.99
Safety Margin:			20%
Required Battery AmpHours:			2.39
Battery AmpHours Provided:			7

POTTER — The Symbol of Protection

NAC Circuit Configuration & Voltage Drop *The Signature* *1/11/2021*

NAC 1 — MAX Circuit Current (amps): 3 — Source Voltage Used (VDC): 20.4
Class: Class B — Usage: Notification — Description: NAC 15

Wire Type	Ohms/1000ft	Length 1-Way	Actual Ohms	Max Load (amps	Volts @ EOL	Min Volts Req'd
#14 Solid	3.19	500	3.190	0.480	18.87	16

Circuit Devices Qty	Lookup Type	Description	Standby (amps) Each	Standby (amps) Total	Alarm (amps) Each	Alarm (amps) Total
5	User Defined	System Sensor P2L 15cd Temp High	0.000000	0.000000	0.053000	0.265000
5	User Defined	S S SL 15cd	0.000000	0.000000	0.043000	0.215000
		User can add devices on the fly to these bottom 5 rows (No lookup function)				
			Total Standby:	0.00000	Total Alarm:	0.48000

NAC 2 — MAX Circuit Current (amps): 3 — Source Voltage Used (VDC): 20.4
Class: Class B — Usage: Notification — Description: NAC 16

Wire Type	Ohms/1000ft	Length 1-Way	Actual Ohms	Max Load (amps	Volts @ EOL	Min Volts Req'd
#14 Solid	3.19	180	1.148	0.552	19.77	16

Circuit Devices Qty	Lookup Type	Description	Standby (amps) Each	Standby (amps) Total	Alarm (amps) Each	Alarm (amps) Total
4	User Defined	S/S HLF	0.000000	0.000000	0.138000	0.552000
		User can add devices on the fly to these bottom 5 rows (No lookup function)				
			Total Standby:	0.00000	Total Alarm:	0.55200

POTTER — The Symbol of Protection

NAC Circuit Configuration & Voltage Drop (cont'd) *The Signature* *1/11/2021*

NAC 3 — MAX Circuit Current (amps): 3 — Source Voltage Used (VDC): 20.4
Class: Class B — Usage: Notification — Description: NAC 17

Wire Type	Ohms/1000ft	Length 1-Way	Actual Ohms	Max Load (amps	Volts @ EOL	Min Volts Req'd
#14 Solid	3.19	220	1.404	0.552	19.63	16

Circuit Devices Qty	Lookup Type	Description	Standby (amps) Each	Standby (amps) Total	Alarm (amps) Each	Alarm (amps) Total
4	User Defined	S/S HLF	0.000000	0.000000	0.138000	0.552000
		User can add devices on the fly to these bottom 5 rows (No lookup function)				
			Total Standby:	0.00000	Total Alarm:	0.55200

NAC 4 — MAX Circuit Current (amps): 3 — Source Voltage Used (VDC): 20.4
Class: Class B — Usage: Notification — Description: NAC 18

Wire Type	Ohms/1000ft	Length 1-Way	Actual Ohms	Max Load (amps	Volts @ EOL	Min Volts Req'd
#14 Solid	3.19	220	1.404	0.552	19.63	16

Circuit Devices Qty	Lookup Type	Description	Standby (amps) Each	Standby (amps) Total	Alarm (amps) Each	Alarm (amps) Total
4	User Defined	S/S HLF	0.000000	0.000000	0.138000	0.552000
		User can add devices on the fly to these bottom 5 rows (No lookup function)				
			Total Standby:	0.00000	Total Alarm:	0.55200

AUX Power — MAX Circuit Current (amps): 3 — Source Voltage Used (VDC): 20.4
Usage: — Description:

Wire Type	Ohms/1000ft	Length 1-Way	Actual Ohms	Max Load (amps	Volts @ Last Device	Min Volts Req'd
#12 Solid	2.01		0.000	0.000	20.40	16

Circuit Devices Qty	Lookup Type	Description	Standby (amps) Each	Standby (amps) Total	Alarm (amps) Each	Alarm (amps) Total
		User can add devices on the fly to these bottom 5 rows (No lookup function)				
			Total Standby:	0.00000	Total Alarm:	0.00000

POTTER — The Symbol of Protection

PSN-64
Battery & Voltage Drop
Calculations

Project Name:	The Signature	Standby Hours:	24
		Alarm Mins:	5
Installed By:	System Integration Group	Safety Margin:	20%
Designed By:	David Johnson		
Date:	1/1/2021	NAC Source Voltage:	20.4

Model #: PSN-64 — Max Panel Current (amps): 6
Panel ID: RPS-4
Location: 3rd floor HVAC 338

User assumes all responsibility to ensure the quantities and current draw values in this worksheet are accurate prior to submittal.

Panel Qty	Part #	Description	Standby (amps) Each	Standby (amps) Total	Alarm (amps) Each	Alarm (amps) Total
1	PSN-64	NAC Power Expander	0.075	0.075	0.075	0.075
			Panel Standby:	0.075	Panel Alarm:	0.075

NAC Circuits (See NAC Configuration below) Cct	Use	Description	Class	Standby (amps) Total	Alarm (amps) Total
1	Notification	NAC 19	Class B	0.00000	0.55200
2	Notification	NAC 20	Class B	0.00000	0.41400
3	Notification	NAC 21	Class B	0.00000	0.41400
4	Notification	NAC 22	Class B	0.00000	0.41400
AUX				0.00000	0.00000
			NAC Standby:	0.00000	NAC Alarm: 1.79400

Battery Calculation Summary	Standby (amps)		Alarm (amps)
Panel Current:	0.07500		0.07500
NAC Circuit Current:	0.00000		1.79400
Total Standby:	0.075000	Total Alarm:	1.86900
Standby Hours:	24	Alarm Mins:	5
AH Required:	1.80	AH Required:	0.16
Total Combined Standby & Alarm AmpHours Required:			1.96
Safety Margin:			20%
Required Battery AmpHours:			2.35
Battery AmpHours Provided:			7

POTTER — The Symbol of Protection

NAC Circuit Configuration & Voltage Drop *The Signature* *1/11/2021*

NAC 1 — MAX Circuit Current (amps): 3 — Source Voltage Used (VDC): 20.4
Class: Class B — Usage: Notification — Description: NAC 19

Wire Type	Ohms/1000ft	Length 1-Way	Actual Ohms	Max Load (amps	Volts @ EOL	Min Volts Req'd
#14 Solid	3.19	190	1.212	0.552	19.73	16

Circuit Devices Qty	Lookup Type	Description	Standby (amps) Each	Standby (amps) Total	Alarm (amps) Each	Alarm (amps) Total
4	User Defined	S/S HLF	0.000000	0.000000	0.138000	0.552000
		User can add devices on the fly to these bottom 5 rows (No lookup function)				
			Total Standby:	0.00000	Total Alarm:	0.55200

NAC 2 — MAX Circuit Current (amps): 3 — Source Voltage Used (VDC): 20.4
Class: Class B — Usage: Notification — Description: NAC 20

Wire Type	Ohms/1000ft	Length 1-Way	Actual Ohms	Max Load (amps	Volts @ EOL	Min Volts Req'd
#14 Solid	3.19	240	1.531	0.414	19.77	16

Circuit Devices Qty	Lookup Type	Description	Standby (amps) Each	Standby (amps) Total	Alarm (amps) Each	Alarm (amps) Total
3	User Defined	S/S HLF	0.000000	0.000000	0.138000	0.414000
		User can add devices on the fly to these bottom 5 rows (No lookup function)				
			Total Standby:	0.00000	Total Alarm:	0.41400

POTTER — The Symbol of Protection

NAC Circuit Configuration & Voltage Drop (cont'd) *The Signature* *1/11/2021*

NAC 3 — MAX Circuit Current (amps): 3 — Source Voltage Used (VDC): 20.4
Class: Class B — Usage: Notification — Description: NAC 21

Wire Type	Ohms/1000ft	Length 1-Way	Actual Ohms	Max Load (amps	Volts @ EOL	Min Volts Req'd
#14 Solid	3.19	240	1.531	0.414	19.77	16

Circuit Devices Qty	Lookup Type	Description	Standby (amps) Each	Standby (amps) Total	Alarm (amps) Each	Alarm (amps) Total
3	User Defined	S/S HLF	0.000000	0.000000	0.138000	0.414000
		User can add devices on the fly to these bottom 5 rows (No lookup function)				
			Total Standby:	0.00000	Total Alarm:	0.41400

NAC 4 — MAX Circuit Current (amps): 3 — Source Voltage Used (VDC): 20.4
Class: Class B — Usage: Notification — Description: NAC 22

Wire Type	Ohms/1000ft	Length 1-Way	Actual Ohms	Max Load (amps	Volts @ EOL	Min Volts Req'd
#14 Solid	3.19	190	1.212	0.414	19.90	16

Circuit Devices Qty	Lookup Type	Description	Standby (amps) Each	Standby (amps) Total	Alarm (amps) Each	Alarm (amps) Total
3	User Defined	S/S HLF	0.000000	0.000000	0.138000	0.414000
		User can add devices on the fly to these bottom 5 rows (No lookup function)				
			Total Standby:	0.00000	Total Alarm:	0.41400

AUX Power — MAX Circuit Current (amps): 3 — Source Voltage Used (VDC): 20.4
Usage: — Description:

Wire Type	Ohms/1000ft	Length 1-Way	Actual Ohms	Max Load (amps	Volts @ Last Device	Min Volts Req'd
#12 Solid	2.01		0.000	0.000	20.40	16

Circuit Devices Qty	Lookup Type	Description	Standby (amps) Each	Standby (amps) Total	Alarm (amps) Each	Alarm (amps) Total
		User can add devices on the fly to these bottom 5 rows (No lookup function)				
			Total Standby:	0.00000	Total Alarm:	0.00000

BATTERY CALCS - BLDG 1 (CONT.)

1

SCALE : N/A

JSC ENGINEERS
MO COA NO. 2012006786 / KS COA NO. E-2818
1925 CENTRAL ST. SUITE #201
KANSAS CITY, MO 64108
phone: (816) 272-5289
email: jsmothers@jscengineers.com

STATE OF MISSOURI — JESSE P. BORRIS — NUMBER PE-2019041526 — PROFESSIONAL ENGINEER
04-13-2022

FIRE ALARM CONTRACTOR:
SIG
SYSTEM INTEGRATION GROUP

PROJECT:
SIGNATURE AT PRYOR II
2100 AND 2150 NW LOWENSTEIN DR.
LEE'S SUMMIT, MISSOURI 64081

REVISIONS: DATE / DESCRIPTION
1
2
3
4
5

Copyright 2022 JSC Engineers

ISSUED:
PERMIT

SHEET TITLE:
BATTERY CALCULATIONS

DATE: 04.13.2022
JOB NO.: 22-094
SHEET:
FA303

7 6 5 4 3 2 1

E D C B A

SILENT KNIGHT

RPS-1000 Calculations
Version 02.24.09

Global Project Values

Project Name:	The Signature	Standby Hours:	24
Project ID:	BLDG 1-C	Alarm Mins:	5
Prepared By:	David Johnson	Derating Factor:	1.2
Date:	1/11/2022	Voltage Drop Warning Threshold %:	10

Panel ID: RPS-5 Model: RPS-1000 Addressable Power Expand. Max NAC Current: 3.0 Amps
Location: IDF 122 Volts: 24 VDC Max Panel Current: 6.0 Amps

Part #	Description	Qty	Current Draw Standby	Current Draw Alarm	Wire AWG & Type	Ohms Per 1000 Ft.	Length(ft) One-Way	Actual Ohms	Volts @ EOL	%Drop
RPS-1000	Power Expander	1	0.040	0.160						
IDP	Photo, Photo-T		0.000	0.000						
IDP	Ion		0.000	0.000						
IDP	Heat, Heat-HT		0.000	0.000						
IDP	Beam, Beam-T		0.000	0.000						
IDP	Pduct (non relay)		0.000	0.000						
IDP	Pduct-R (with relay)		0.000	0.000						
IDP	Acclimate, ROR		0.000	0.000						
IDP	Control		0.000	0.000						
IDP	Control-6		0.000	0.000						
IDP	Monitor, Minimon		0.000	0.000						
IDP	Monitor-2		0.000	0.000						
IDP	Monitor-10		0.000	0.000						
IDP	Pull-SA, Pull-DA		0.000	0.000						
IDP	Relay		0.000	0.000						
IDP	Relay-6		0.000	0.000						
IDP	Zone, Zone-6		0.000	0.000						
IDP	Iso (Isolator Module)		0.000	0.000						
SSB224BI	Isolator Base		0.000	0.000						
SSB501BHT	Sounder Base		0.000	0.000						
SSB224RB	Relay Base		0.000	0.000						
RTS451	Magnetic Remote Test		0.000	0.000						
RTS451KEY	Key Activated Test		0.000	0.000						
RA400Z	Remote LED		0.000	0.000						
5815XL	SLC Expander		0.000	0.000						
RA-100	LCD Remote Annunc		0.000	0.000						
RA-1000	LCD Remote Annunc		0.000	0.000						
5824	Serial/Parallel Module		0.000	0.000						
5496	Power Expander		0.000	0.000						
RPS-1000	Power Expander		0.000	0.000						
5865-4	LED Annunciator (4G)		0.000	0.000						
5865-3	LED Annunciator (3G)		0.000	0.000						
5880	LED Driver Module		0.000	0.000						
5883	Relay Module		0.000	0.000						
VIP-VCM	Voice Control Module		0.000	0.000						
VIP-SW16	Switch Expander		0.000	0.000						
VIP-50	50 Amplifier		0.000	0.000						
VIP-RM	Remote Microphone		0.000	0.000						
PGM-I/O #1	NAC 23	cfg	0.000	0.202	#14 Solid	2.52	300	1.51	20.09	1.50%
PGM-I/O #2	NAC 24	cfg	0.000	0.414	#14 Solid	2.52	150	0.76	20.09	1.53%
PGM-I/O #3	NAC 25	cfg	0.000	0.414	#14 Solid	2.52	150	0.76	20.09	1.53%
PGM-I/O #4	NAC 26	cfg	0.000	0.552	#14 Solid	2.52	220	1.11	19.79	3.00%
PGM-I/O #5	NAC 27	cfg	0.000	0.276	#14 Solid	2.52	160	0.81	20.18	1.09%
PGM-I/O #6	trigger, bdlg 1-C	cfg	0.000	0.060	#14 Solid	2.52	150	0.76	20.35	0.22%

NA

Total Standby Current (Amps)	0.040	2.078	Total Alarm Current (Amps)
Standby Time In Hours	24	0.083	Alarm Time In Minutes / 60 (5 Mins)
Total Standby AH Required	0.960	0.173	Total Alarm AH Required
Total Combined AH Required	1.13		
Multiply By The Derating Factor	1.20		
Minimum Battery AmpHours Required	1.36		

Command Shortcuts

Configure Circuits | Print Page

POTTER The Symbol of Protection

PSN-64
Battery & Voltage Drop Calculations

Project Name:	The Signature	Standby Hours:	24
	BLDG 1-C	Alarm Mins:	5
Installed By:	System Integration Group	Safety Margin:	20%
Designed By:	David Johnson		
Date:	1/11/2021	NAC Source Voltage:	20.4

Model #: PSN-64 Max Panel Current (amps): 6
Panel ID: RPS-6
Location: 1st flr IDF 122

User assumes all responsibility to ensure the quantities and current draw values in this worksheet are accurate prior to submittal.

Qty	Panel Part #	Description	Standby (amps) Each	Standby (amps) Total	Alarm (amps) Each	Alarm (amps) Total
1	PSN-64	NAC Power Expander	0.075	0.075	0.075	0.075
		Panel Standby:		0.075	Panel Alarm:	0.075

Ckt	NAC Circuits (See NAC Configuration below) Use	Description	Class	Standby (amps) Total	Alarm (amps) Total
1	Notification	NAC 28	Class B	0.00000	0.41400
2	Notification	NAC 29	Class B	0.00000	0.55200
3	Notification	NAC 30	Class B	0.00000	0.55200
4	Aux Power	AUX 2	Class B	0.00000	0.00000
AUX				0.00000	0.00000
			NAC Standby:	0.00000	NAC Alarm: 1.51800

Battery Calculation Summary

	Standby (amps)		Alarm (amps)
Panel Current:	0.07500		0.07500
NAC Circuit Current:	0.00000		1.51800
Total Standby:	0.075000	Total Alarm:	1.59300
Standby Hours:	24	Alarm Mins:	5
AH Required:	1.80	AH Required:	0.14
Total Combined Standby & Alarm AmpHours Required:			1.94
Safety Margin:			20%
Required Battery AmpHours:			2.33
Battery AmpHours Provided:			7

POTTER The Symbol of Protection

NAC Circuit Configuration & Voltage Drop *The Signature* *1/11/2021*

NAC 1 MAX Circuit Current (amps): 3 Source Voltage Used (VDC): 20.4
Class: Class B Usage: Notification Description: NAC 28

Wire Type	Ohms/1000ft	Length 1-Way	Actual Ohms	Max Load (amps	Volts @ EOL	Min Volts Req'd
#14 Solid	3.19	210	1.340	0.414	19.85	16

Qty	Circuit Devices Lookup Type	Description	Standby (amps) Each	Standby (amps) Total	Alarm (amps) Each	Alarm (amps) Total
3	User Defined	S/S HLF	0.000000	0.000000	0.138000	0.414000
		User can add devices on the fly to these bottom 5 rows (No lookup function)				
			Total Standby:	0.00000	Total Alarm:	0.41400

NAC 2 MAX Circuit Current (amps): 3 Source Voltage Used (VDC): 20.4
Class: Class B Usage: Notification Description: NAC 29

Wire Type	Ohms/1000ft	Length 1-Way	Actual Ohms	Max Load (amps	Volts @ EOL	Min Volts Req'd
#14 Solid	3.19	275	1.755	0.552	19.43	16

Qty	Circuit Devices Lookup Type	Description	Standby (amps) Each	Standby (amps) Total	Alarm (amps) Each	Alarm (amps) Total
4	User Defined	S/S HLF	0.000000	0.000000	0.138000	0.552000
		User can add devices on the fly to these bottom 5 rows (No lookup function)				
			Total Standby:	0.00000	Total Alarm:	0.55200

POTTER The Symbol of Protection

NAC Circuit Configuration & Voltage Drop (cont'd) *The Signature* *1/11/2021*

NAC 3 MAX Circuit Current (amps): 3 Source Voltage Used (VDC): 20.4
Class: Class B Usage: Notification Description: NAC 30

Wire Type	Ohms/1000ft	Length 1-Way	Actual Ohms	Max Load (amps	Volts @ EOL	Min Volts Req'd
#14 Solid	3.19	210	1.340	0.552	19.66	16

Qty	Circuit Devices Lookup Type	Description	Standby (amps) Each	Standby (amps) Total	Alarm (amps) Each	Alarm (amps) Total
4	User Defined	S/S HLF	0.000000	0.000000	0.138000	0.552000
		User can add devices on the fly to these bottom 5 rows (No lookup function)				
			Total Standby:	0.00000	Total Alarm:	0.55200

NAC 4 MAX Circuit Current (amps): 3 Source Voltage Used (VDC): 20.4
Class: Class B Usage: Aux Power Description: AUX 2

Wire Type	Ohms/1000ft	Length 1-Way	Actual Ohms	Max Load (amps	Volts @ EOL	Min Volts Req'd
#14 Solid	3.19		0.000	0.000	20.40	16

Qty	Circuit Devices Lookup Type	Description	Standby (amps) Each	Standby (amps) Total	Alarm (amps) Each	Alarm (amps) Total
		User can add devices on the fly to these bottom 5 rows (No lookup function)				
			Total Standby:	0.00000	Total Alarm:	0.00000

AUX Power MAX Circuit Current (amps): 3 Source Voltage Used (VDC): 20.4
Usage: Description:

Wire Type	Ohms/1000ft	Length 1-Way	Actual Ohms	Max Load (amps	Volts @ Last Device	Min Volts Req'd
#12 Solid	2.01		0.000	0.000	20.40	16

Qty	Circuit Devices Lookup Type	Description	Standby (amps) Each	Standby (amps) Total	Alarm (amps) Each	Alarm (amps) Total
		User can add devices on the fly to these bottom 5 rows (No lookup function)				
			Total Standby:	0.00000	Total Alarm:	0.00000

POTTER The Symbol of Protection

PSN-64
Battery & Voltage Drop Calculations

Project Name:	The Signature	Standby Hours:	24
	BLDG 1-C	Alarm Mins:	5
Installed By:	System Integration Group	Safety Margin:	20%
Designed By:	David Johnson		
Date:	1/11/2021	NAC Source Voltage:	20.4

Model #: PSN-64 Max Panel Current (amps): 6
Panel ID: RPS-7
Location: 2nd Flr MECH 221

User assumes all responsibility to ensure the quantities and current draw values in this worksheet are accurate prior to submittal.

Qty	Panel Part #	Description	Standby (amps) Each	Standby (amps) Total	Alarm (amps) Each	Alarm (amps) Total
1	PSN-64	NAC Power Expander	0.075	0.075	0.075	0.075
		Panel Standby:		0.075	Panel Alarm:	0.075

Ckt	NAC Circuits (See NAC Configuration below) Use	Description	Class	Standby (amps) Total	Alarm (amps) Total
1	Notification	NAC 31	Class B	0.00000	0.41400
2	Notification	NAC 32	Class B	0.00000	0.41400
3	Notification	NAC 33	Class B	0.00000	0.41400
4	Notification	NAC 34	Class B	0.00000	0.00000
AUX	NAC 35	NAC 35		0.00000	0.27600
			NAC Standby:	0.00000	NAC Alarm: 1.51800

Battery Calculation Summary

	Standby (amps)		Alarm (amps)
Panel Current:	0.07500		0.07500
NAC Circuit Current:	0.00000		1.51800
Total Standby:	0.075000	Total Alarm:	1.59300
Standby Hours:	24	Alarm Mins:	5
AH Required:	1.80	AH Required:	0.14
Total Combined Standby & Alarm AmpHours Required:			1.94
Safety Margin:			20%
Required Battery AmpHours:			2.33
Battery AmpHours Provided:			7

POTTER The Symbol of Protection

NAC Circuit Configuration & Voltage Drop *The Signature* *1/11/2021*

NAC 1 MAX Circuit Current (amps): 3 Source Voltage Used (VDC): 20.4
Class: Class B Usage: Notification Description: NAC 31

Wire Type	Ohms/1000ft	Length 1-Way	Actual Ohms	Max Load (amps	Volts @ EOL	Min Volts Req'd
#14 Solid	3.19	300	1.914	0.414	19.61	16

Qty	Circuit Devices Lookup Type	Description	Standby (amps) Each	Standby (amps) Total	Alarm (amps) Each	Alarm (amps) Total
3	User Defined	S/S HLF	0.000000	0.000000	0.138000	0.414000
		User can add devices on the fly to these bottom 5 rows (No lookup function)				
			Total Standby:	0.00000	Total Alarm:	0.41400

NAC 2 MAX Circuit Current (amps): 3 Source Voltage Used (VDC): 20.4
Class: Class B Usage: Notification Description: NAC 32

Wire Type	Ohms/1000ft	Length 1-Way	Actual Ohms	Max Load (amps	Volts @ EOL	Min Volts Req'd
#14 Solid	3.19	150	0.957	0.414	20.00	16

Qty	Circuit Devices Lookup Type	Description	Standby (amps) Each	Standby (amps) Total	Alarm (amps) Each	Alarm (amps) Total
3	User Defined	S/S HLF	0.000000	0.000000	0.138000	0.414000
		User can add devices on the fly to these bottom 5 rows (No lookup function)				
			Total Standby:	0.00000	Total Alarm:	0.41400

POTTER The Symbol of Protection

NAC Circuit Configuration & Voltage Drop (cont'd) *The Signature* *1/11/2021*

NAC 3 MAX Circuit Current (amps): 3 Source Voltage Used (VDC): 20.4
Class: Class B Usage: Notification Description: NAC 33

Wire Type	Ohms/1000ft	Length 1-Way	Actual Ohms	Max Load (amps	Volts @ EOL	Min Volts Req'd
#14 Solid	3.19	150	0.957	0.414	20.00	16

Qty	Circuit Devices Lookup Type	Description	Standby (amps) Each	Standby (amps) Total	Alarm (amps) Each	Alarm (amps) Total
3	User Defined	S/S HLF	0.000000	0.000000	0.138000	0.414000
		User can add devices on the fly to these bottom 5 rows (No lookup function)				
			Total Standby:	0.00000	Total Alarm:	0.41400

NAC 4 MAX Circuit Current (amps): 3 Source Voltage Used (VDC): 20.4
Class: Class B Usage: Notification Description: NAC 34

Wire Type	Ohms/1000ft	Length 1-Way	Actual Ohms	Max Load (amps	Volts @ EOL	Min Volts Req'd
#14 Solid	3.19	220	1.404	0.000	20.40	16

Qty	Circuit Devices Lookup Type	Description	Standby (amps) Each	Standby (amps) Total	Alarm (amps) Each	Alarm (amps) Total
		User can add devices on the fly to these bottom 5 rows (No lookup function)				
			Total Standby:	0.00000	Total Alarm:	0.00000

AUX Power MAX Circuit Current (amps): 3 Source Voltage Used (VDC): 20.4
Usage: Notification Description: NAC 35

Wire Type	Ohms/1000ft	Length 1-Way	Actual Ohms	Max Load (amps	Volts @ Last Device	Min Volts Req'd
#14 Solid	3.19	160	1.021	0.276	20.12	16

Qty	Circuit Devices Lookup Type	Description	Standby (amps) Each	Standby (amps) Total	Alarm (amps) Each	Alarm (amps) Total
2	User Defined	S/S HLF	0.000000	0.000000	0.138000	0.276000
		User can add devices on the fly to these bottom 5 rows (No lookup function)				
			Total Standby:	0.00000	Total Alarm:	0.27600

BATTERY CALCS - BLDG 1 (CONT.) 1

SCALE : N/A

JSC ENGINEERS
MO COA NO. 2012006786 / KS COA NO. E-2818
1925 CENTRAL ST. SUITE #201
KANSAS CITY, MO 64108
phone: (816) 272-5289
email: jsmothers@jscengineers.com

STATE OF MISSOURI JESSE P. BORRIS NUMBER PE-2019041526 PROFESSIONAL ENGINEER
04-13-2022

FIRE ALARM CONTRACTOR:
SIG
SYSTEM INTEGRATION GROUP

PROJECT:
SIGNATURE AT PRYOR II
2100 AND 2150 NW LOWENSTEIN DR.
LEE'S SUMMIT, MISSOURI 64081

REVISIONS: DATE / DESCRIPTION
1
2
3
4
5

Copyright 2022 JSC Engineers

ISSUED:
PERMIT

SHEET TITLE:
BATTERY CALCULATIONS

DATE: 04.13.2022
JOB NO.: 22-094
SHEET:
FA304

POTTER — The Symbol of Protection

PSN-64
Battery & Voltage Drop Calculations

Project Name:	The Signature	Standby Hours:	24
	BLDG 1-C	Alarm Mins:	5
Installed By:	System Integration Group	Safety Margin:	20%
Designed By:	David Johnson		
Date:	1/11/2021	NAC Source Voltage:	20.4

Model #: PSN-64
Panel ID: RPS-8
Location: 2nd Flr MECH 221
Max Panel Current (amps): 6

User assumes all responsibility to ensure the quantities and current draw values in this worksheet are accurate prior to submittal.

Qty	Panel Part #	Description	Standby (amps) Each	Standby (amps) Total	Alarm (amps) Each	Alarm (amps) Total
1	PSN-64	NAC Power Expander	0.075	0.075	0.075	0.075
			Panel Standby:	0.075	Panel Alarm:	0.075

Cct	NAC Circuits (See NAC Configuration below) Use	Description	Class	Standby (amps) Total	Alarm (amps) Total
1	Notification	NAC 36	Class B	0.00000	0.41400
2	Notification	NAC 37	Class B	0.00000	0.55200
3	Notification	NAC 38	Class B	0.00000	0.55200
4	Aux Power	AUX3	Class B	0.00000	0.00000
AUX				0.00000	0.00000
			NAC Standby:	0.00000	NAC Alarm: 1.51800

Battery Calculation Summary

	Standby (amps)		Alarm (amps)
Panel Current:	0.07500		0.07500
NAC Circuit Current:	0.00000		1.51800
Total Standby:	0.075000	Total Alarm:	1.59300
Standby Hours:	24	Alarm Mins:	5
AH Required:	1.80	AH Required:	0.14
Total Combined Standby & Alarm AmpHours Required:			1.94
Safety Margin:			20%
Required Battery AmpHours:			2.33
Battery AmpHours Provided:			7

POTTER — The Symbol of Protection

NAC Circuit Configuration & Voltage Drop *The Signature* *1/11/2021*

NAC 1 MAX Circuit Current (amps): 3 Source Voltage Used (VDC): 20.4
Class: Class B Usage: Notification Description: NAC 36

Wire Type	Ohms/1000ft	Length 1-Way	Actual Ohms	Max Load (amps	Volts @ EOL	Min Volts Req'd
#14 Solid	3.19	210	1.340	0.414	19.85	16

Qty	Circuit Devices Lookup Type	Description	Standby (amps) Each	Standby (amps) Total	Alarm (amps) Each	Alarm (amps) Total
3	User Defined	S/S HLF	0.000000	0.000000	0.138000	0.414000
		User can add devices on the fly				
		to these bottom 5 rows				
		(No lookup function)				
			Total Standby:	0.00000	Total Alarm:	0.41400

NAC 2 MAX Circuit Current (amps): 3 Source Voltage Used (VDC): 20.4
Class: Class B Usage: Notification Description: NAC 37

Wire Type	Ohms/1000ft	Length 1-Way	Actual Ohms	Max Load (amps	Volts @ EOL	Min Volts Req'd
#14 Solid	3.19	275	1.755	0.552	19.43	16

Qty	Circuit Devices Lookup Type	Description	Standby (amps) Each	Standby (amps) Total	Alarm (amps) Each	Alarm (amps) Total
4	User Defined	S/S HLF	0.000000	0.000000	0.138000	0.552000
		User can add devices on the fly				
		to these bottom 5 rows				
		(No lookup function)				
			Total Standby:	0.00000	Total Alarm:	0.55200

POTTER — The Symbol of Protection

NAC Circuit Configuration & Voltage Drop (cont'd) *The Signature* *1/11/2021*

NAC 3 MAX Circuit Current (amps): 3 Source Voltage Used (VDC): 20.4
Class: Class B Usage: Notification Description: NAC 38

Wire Type	Ohms/1000ft	Length 1-Way	Actual Ohms	Max Load (amps	Volts @ EOL	Min Volts Req'd
#14 Solid	3.19	210	1.340	0.552	19.66	16

Qty	Circuit Devices Lookup Type	Description	Standby (amps) Each	Standby (amps) Total	Alarm (amps) Each	Alarm (amps) Total
4	User Defined	S/S HLF	0.000000	0.000000	0.138000	0.552000
		User can add devices on the fly				
		to these bottom 5 rows				
		(No lookup function)				
			Total Standby:	0.00000	Total Alarm:	0.55200

NAC 4 MAX Circuit Current (amps): 3 Source Voltage Used (VDC): 20.4
Class: Class B Usage: Aux Power Description: AUX3

Wire Type	Ohms/1000ft	Length 1-Way	Actual Ohms	Max Load (amps	Volts @ EOL	Min Volts Req'd
#14 Solid	3.19	220	1.404	0.000	20.40	16

Qty	Circuit Devices Lookup Type	Description	Standby (amps) Each	Standby (amps) Total	Alarm (amps) Each	Alarm (amps) Total
		User can add devices on the fly				
		to these bottom 5 rows				
		(No lookup function)				
			Total Standby:	0.00000	Total Alarm:	0.00000

AUX Power MAX Circuit Current (amps): 3 Source Voltage Used (VDC): 20.4
Usage: Unused Description:

Wire Type	Ohms/1000ft	Length 1-Way	Actual Ohms	Max Load (amps	Volts @ Last Device	Min Volts Req'd
#14 Solid	3.19	160	1.021	0.000	20.40	16

Qty	Circuit Devices Lookup Type	Description	Standby (amps) Each	Standby (amps) Total	Alarm (amps) Each	Alarm (amps) Total
		User can add devices on the fly				
		to these bottom 5 rows				
		(No lookup function)				
			Total Standby:	0.00000	Total Alarm:	0.00000

POTTER — The Symbol of Protection

PSN-64
Battery & Voltage Drop Calculations

Project Name:	The Signature	Standby Hours:	24
	BLDG 1-C	Alarm Mins:	5
Installed By:	System Integration Group	Safety Margin:	20%
Designed By:	David Johnson		
Date:	1/11/2021	NAC Source Voltage:	20.4

Model #: PSN-64
Panel ID: RPS-9
Location: 3rd flr IDF 322
Max Panel Current (amps): 6

User assumes all responsibility to ensure the quantities and current draw values in this worksheet are accurate prior to submittal.

Qty	Panel Part #	Description	Standby (amps) Each	Standby (amps) Total	Alarm (amps) Each	Alarm (amps) Total
1	PSN-64	NAC Power Expander	0.075	0.075	0.075	0.075
			Panel Standby:	0.075	Panel Alarm:	0.075

Cct	NAC Circuits (See NAC Configuration below) Use	Description	Class	Standby (amps) Total	Alarm (amps) Total
1	Notification	NAC 39	Class B	0.00000	0.24500
2	Notification	NAC 40	Class B	0.00000	0.41400
3	Notification	NAC 41	Class B	0.00000	0.41400
4	Notification	NAC 42	Class B	0.00000	0.55200
AUX	NAC 43	NAC 43		0.00000	0.27600
			NAC Standby:	0.00000	NAC Alarm: 1.90100

Battery Calculation Summary

	Standby (amps)		Alarm (amps)
Panel Current:	0.07500		0.07500
NAC Circuit Current:	0.00000		1.90100
Total Standby:	0.075000	Total Alarm:	1.97600
Standby Hours:	24	Alarm Mins:	5
AH Required:	1.80	AH Required:	0.17
Total Combined Standby & Alarm AmpHours Required:			1.97
Safety Margin:			20%
Required Battery AmpHours:			2.36
Battery AmpHours Provided:			7

POTTER — The Symbol of Protection

NAC Circuit Configuration & Voltage Drop *The Signature* *1/11/2021*

NAC 1 MAX Circuit Current (amps): 3 Source Voltage Used (VDC): 20.4
Class: Class B Usage: Notification Description: NAC 39

Wire Type	Ohms/1000ft	Length 1-Way	Actual Ohms	Max Load (amps	Volts @ EOL	Min Volts Req'd
#14 Solid	3.19	300	1.914	0.245	19.93	16

Qty	Circuit Devices Lookup Type	Description	Standby (amps) Each	Standby (amps) Total	Alarm (amps) Each	Alarm (amps) Total
3	User Defined	System Sensor P2L 15cd Temp High	0.000000	0.000000	0.053000	0.159000
2	User Defined	S S SL 15cd	0.000000	0.000000	0.043000	0.086000
		User can add devices on the fly				
		to these bottom 5 rows				
		(No lookup function)				
			Total Standby:	0.00000	Total Alarm:	0.24500

NAC 2 MAX Circuit Current (amps): 3 Source Voltage Used (VDC): 20.4
Class: Class B Usage: Notification Description: NAC 40

Wire Type	Ohms/1000ft	Length 1-Way	Actual Ohms	Max Load (amps	Volts @ EOL	Min Volts Req'd
#14 Solid	3.19	150	0.957	0.414	20.00	16

Qty	Circuit Devices Lookup Type	Description	Standby (amps) Each	Standby (amps) Total	Alarm (amps) Each	Alarm (amps) Total
3	User Defined	S/S HLF	0.000000	0.000000	0.138000	0.414000
		User can add devices on the fly				
		to these bottom 5 rows				
		(No lookup function)				
			Total Standby:	0.00000	Total Alarm:	0.41400

POTTER — The Symbol of Protection

NAC Circuit Configuration & Voltage Drop (cont'd) *The Signature* *1/11/2021*

NAC 3 MAX Circuit Current (amps): 3 Source Voltage Used (VDC): 20.4
Class: Class B Usage: Notification Description: NAC 41

Wire Type	Ohms/1000ft	Length 1-Way	Actual Ohms	Max Load (amps	Volts @ EOL	Min Volts Req'd
#14 Solid	3.19	150	0.957	0.414	20.00	16

Qty	Circuit Devices Lookup Type	Description	Standby (amps) Each	Standby (amps) Total	Alarm (amps) Each	Alarm (amps) Total
3	User Defined	S/S HLF	0.000000	0.000000	0.138000	0.414000
		User can add devices on the fly				
		to these bottom 5 rows				
		(No lookup function)				
			Total Standby:	0.00000	Total Alarm:	0.41400

NAC 4 MAX Circuit Current (amps): 3 Source Voltage Used (VDC): 20.4
Class: Class B Usage: Notification Description: NAC 42

Wire Type	Ohms/1000ft	Length 1-Way	Actual Ohms	Max Load (amps	Volts @ EOL	Min Volts Req'd
#14 Solid	3.19	220	1.404	0.552	19.63	16

Qty	Circuit Devices Lookup Type	Description	Standby (amps) Each	Standby (amps) Total	Alarm (amps) Each	Alarm (amps) Total
4	User Defined	S/S HLF	0.000000	0.000000	0.138000	0.552000
		User can add devices on the fly				
		to these bottom 5 rows				
		(No lookup function)				
			Total Standby:	0.00000	Total Alarm:	0.55200

NAC 5 MAX Circuit Current (amps): 3 Source Voltage Used (VDC): 20.4
Usage: Notification Description: NAC 43

Wire Type	Ohms/1000ft	Length 1-Way	Actual Ohms	Max Load (amps	Volts @ Last Device	Min Volts Req'd
#14 Solid	3.19	160	1.021	0.276	20.12	16

Qty	Circuit Devices Lookup Type	Description	Standby (amps) Each	Standby (amps) Total	Alarm (amps) Each	Alarm (amps) Total
2	User Defined	S/S HLF	0.000000	0.000000	0.138000	0.276000
		User can add devices on the fly				
		to these bottom 5 rows				
		(No lookup function)				
			Total Standby:	0.00000	Total Alarm:	0.27600

BATTERY CALCS - BLDG 1 (CONT.)

SCALE : N/A

1

JSC ENGINEERS
MO COA NO. 2012006786 / KS COA NO. E-2818
1925 CENTRAL ST. SUITE #201
KANSAS CITY, MO 64108
phone: (816) 272-5289
email: jsmothers@jscengineers.com

STATE OF MISSOURI — JESSEY P. BORRIS — NUMBER PE-2019041526 — PROFESSIONAL ENGINEER
04-13-2022

FIRE ALARM CONTRACTOR:
SIG
SYSTEM INTEGRATION GROUP

PROJECT:
SIGNATURE AT PRYOR II
2100 AND 2150 NW LOWENSTEIN DR.
LEE'S SUMMIT, MISSOURI 64081

REVISIONS: DATE / DESCRIPTION
1
2
3
4
5

Copyright 2022
JSC Engineers

ISSUED:
PERMIT

SHEET TITLE:
BATTERY CALCULATIONS

DATE: 04.13.2022
JOB NO.: 22-094
SHEET:
FA305

7 6 5 4 3 2 1

E

D

C

B

A

POTTER — The Symbol of Protection

PSN-64
Battery & Voltage Drop
Calculations

Project Name:	The Signature	Standby Hours:	24
	BLDG 1-C	Alarm Mins:	5
Installed By:	System Integration Group	Safety Margin:	20%
Designed By:	David Johnson		
Date:	1/11/2021	NAC Source Voltage:	20.4

Model #: PSN-64
Panel ID: RPS-10
Location: 3rd flr IDF 322

Max Panel Current (amps): 6

User assumes all responsibility to ensure the quantities and current draw values in this worksheet are accurate prior to submittal.

Panel Qty	Part #	Description	Standby (amps) Each	Standby (amps) Total	Alarm (amps) Each	Alarm (amps) Total
1	PSN-64	NAC Power Expander	0.075	0.075	0.075	0.075
			Panel Standby:	0.075	Panel Alarm:	0.075

NAC Circuits (See NAC Configuration below) Ckt	Use	Description	Class	Standby (amps) Total	Alarm (amps) Total
1	Notification	NAC 44	Class B	0.00000	0.41400
2	Notification	NAC 45	Class B	0.00000	0.96100
3	Notification	NAC 46	Class B	0.00000	0.55200
4	Unused		Class B	0.00000	0.00000
AUX				0.00000	0.00000
			NAC Standby:	0.00000	NAC Alarm: 1.92700

Battery Calculation Summary

	Standby (amps)		Alarm (amps)
Panel Current:	0.07500		0.07500
NAC Circuit Current:	0.00000		1.92700
Total Standby:	0.075000	Total Alarm:	2.00200
Standby Hours:	24	Alarm Mins:	5
AH Required:	1.80	AH Required:	0.17
Total Combined Standby & Alarm AmpHours Required:			1.97
Safety Margin:			20%
Required Battery AmpHours:			2.36
Battery AmpHours Provided:			7

POTTER

NAC Circuit Configuration & Voltage Drop *The Signature* *1/11/2021*

NAC 1 MAX Circuit Current (amps): 3 Source Voltage Used (VDC): 20.4
Class: Class B Usage: Notification Description: NAC 44

Wire Type	Ohms/1000ft	Length 1-Way	Actual Ohms	Max Load (amps	Volts @ EOL	Min Volts Req'd
#14 Solid	3.19	210	1.340	0.414	19.85	16

Circuit Devices Qty	Lookup Type	Description	Standby (amps) Each	Standby (amps) Total	Alarm (amps) Each	Alarm (amps) Total
3	User Defined	S/S HLF	0.000000	0.000000	0.138000	0.414000
		User can add devices on the fly to these bottom 5 rows (No lookup function)				
			Total Standby:	0.00000	Total Alarm:	0.41400

NAC 2 MAX Circuit Current (amps): 3 Source Voltage Used (VDC): 20.4
Class: Class B Usage: Notification Description: NAC 45

Wire Type	Ohms/1000ft	Length 1-Way	Actual Ohms	Max Load (amps	Volts @ EOL	Min Volts Req'd
#14 Solid	3.19	275	1.755	0.961	18.71	16

Circuit Devices Qty	Lookup Type	Description	Standby (amps) Each	Standby (amps) Total	Alarm (amps) Each	Alarm (amps) Total
2	User Defined	S/S HLF	0.000000	0.000000	0.138000	0.276000
2	User Defined	S/S P2HLF 135cd	0.000000	0.000000	0.277000	0.554000
2	User Defined	S S SL 15cd	0.000000	0.000000	0.043000	0.086000
1	User Defined	System Sensor P2L 15cd temp low	0.000000	0.000000	0.045000	0.045000
		User can add devices on the fly to these bottom 5 rows (No lookup function)				
			Total Standby:	0.00000	Total Alarm:	0.96100

POTTER

NAC Circuit Configuration & Voltage Drop (cont'd) *The Signature* *1/11/2021*

NAC 3 MAX Circuit Current (amps): 3 Source Voltage Used (VDC): 20.4
Class: Class B Usage: Notification Description: NAC 46

Wire Type	Ohms/1000ft	Length 1-Way	Actual Ohms	Max Load (amps	Volts @ EOL	Min Volts Req'd
#14 Solid	3.19	210	1.340	0.552	19.66	16

Circuit Devices Qty	Lookup Type	Description	Standby (amps) Each	Standby (amps) Total	Alarm (amps) Each	Alarm (amps) Total
4	User Defined	S/S HLF	0.000000	0.000000	0.138000	0.552000
		User can add devices on the fly to these bottom 5 rows (No lookup function)				
			Total Standby:	0.00000	Total Alarm:	0.55200

NAC 4 MAX Circuit Current (amps): 3 Source Voltage Used (VDC): 20.4
Class: Class B Usage: Unused Description:

Wire Type	Ohms/1000ft	Length 1-Way	Actual Ohms	Max Load (amps	Volts @ EOL	Min Volts Req'd
#14 Solid	3.19		0.000	0.000	20.40	16

Circuit Devices Qty	Lookup Type	Description	Standby (amps) Each	Standby (amps) Total	Alarm (amps) Each	Alarm (amps) Total
		User can add devices on the fly to these bottom 5 rows (No lookup function)				
			Total Standby:	0.00000	Total Alarm:	0.00000

NAC 5 MAX Circuit Current (amps): 3 Source Voltage Used (VDC): 20.4
Usage: Description:

Wire Type	Ohms/1000ft	Length 1-Way	Actual Ohms	Max Load (amps	Volts @ Last Device	Min Volts Req'd
#14 Solid	3.19	160	1.021	0.000	20.40	16

Circuit Devices Qty	Lookup Type	Description	Standby (amps) Each	Standby (amps) Total	Alarm (amps) Each	Alarm (amps) Total
		User can add devices on the fly to these bottom 5 rows (No lookup function)				
			Total Standby:	0.00000	Total Alarm:	0.00000

SILENT KNIGHT
RPS-1000 Calculations
Version 02.24.09

Global Project Values

Project Name:	The Signature	Standby Hours:	24
Project ID:	BLDG 1-A	Alarm Mins:	5
Prepared By:	David Johnson	Derating Factor:	1.2
Date:	1/11/2022	Voltage Drop Warning Threshold %:	10

Panel ID: RPS-11
Location: IDF 106
Model: RPS-1000 Addressable Power Expand.
Volts: 24 VDC
Max NAC Current: 3.0 Amps
Max Panel Current: 6.0 Amps

Part.#	Description	Qty	Current Draw Standby	Current Draw Alarm	Wire AWG & Type	Ohms Per 1000 Ft.	Length(ft) One-Way	Actual Ohms	Volts @ EOL	%Drop
RPS-1000	Power Expander	1	0.040	0.160						
IDP	Photo, Photo-T		0.000	0.000						
IDP	Ion		0.000	0.000						
IDP	Heat, Heat-HT		0.000	0.000						
IDP	Beam, Beam-T		0.000	0.000						
IDP	Pduct (non relay)		0.000	0.000						
IDP	Pduct-R (with relay)		0.000	0.000						
IDP	Acclimate, ROR		0.000	0.000						
IDP	Control		0.000	0.000						
IDP	Control-6		0.000	0.000						
IDP	Monitor, Minimon		0.000	0.000						
IDP	Monitor-2		0.000	0.000						
IDP	Monitor-10		0.000	0.000						
IDP	Pull-SA, Pull-DA		0.000	0.000						
IDP	Relay		0.000	0.000						
IDP	Relay-6		0.000	0.000						
IDP	Zone, Zone-6		0.000	0.000						
IDP	Iso (Isolator Module)		0.000	0.000						
SSB224BI	Isolator Base		0.000	0.000						
SSB501BHT	Sounder Base		0.000	0.000						
SSB224RB	Relay Base		0.000	0.000						
RTS451	Magnetic Remote Test		0.000	0.000						
RTS451KEY	Key Activated Test		0.000	0.000						
RA400Z	Remote LED		0.000	0.000						
5815XL	SLC Expander		0.000	0.000						
RA-100	LCD Remote Annunc		0.000	0.000						
RA-1000	LCD Remote Annunc		0.000	0.000						
5824	Serial/Parallel Module		0.000	0.000						
5496	Power Expander		0.000	0.000						
RPS-1000	Power Expander		0.000	0.000						
5865-4	LED Annunciator (4G)		0.000	0.000						
5865-3	LED Annunciator (3G)		0.000	0.000						
5880	LED Driver Module		0.000	0.000						
5883	Relay Module		0.000	0.000						
VIP-VCM	Voice Control Module		0.000	0.000						
VIP-SW16	Switch Expander		0.000	0.000						
VIP-50	50 Amplifier		0.000	0.000						
VIP-RM	Remote Microphone		0.000	0.000						
PGM-I/O #1	NAC 47	cfg.	0.000	0.552	#14 Solid	2.52	250	1.26	19.70	3.41%
PGM-I/O #2	NAC 48	cfg.	0.000	0.779	#14 Solid	2.52	230	1.16	19.50	4.43%
PGM-I/O #3	NAC 49	cfg.	0.000	0.552	#14 Solid	2.52	300	1.51	19.57	4.09%
PGM-I/O #4	NAC 50	cfg.	0.000	0.552	#14 Solid	2.52	210	1.06	19.82	2.86%
PGM-I/O #5	NAC 51	cfg.	0.000	0.414	#14 Solid	2.52	170	0.86	20.05	1.74%
PGM-I/O #6	trigger, bdlg 1-A	cfg.	0.000	0.030	#14 Solid	2.52	150	0.76	20.38	0.11%

N/A

Total Standby Current (Amps)	0.040	3.039	Total Alarm Current (Amps)
Standby Time In Hours	24	0.083	Alarm Time In Minutes / 60 (5 Mins)
Total Standby AH Required	0.960	0.253	Total Alarm AH Required
Total Combined AH Required	1.21		
Multiply By The Derating Factor	1.20		
Minimum Battery AmpHours Required	**1.46**		

Command Shortcuts
Configure Circuits | Print Page

POTTER — The Symbol of Protection

PSN-64
Battery & Voltage Drop
Calculations

Project Name:	The Signature	Standby Hours:	24
	BLDG 1-A	Alarm Mins:	5
Installed By:	System Integration Group	Safety Margin:	20%
Designed By:	David Johnson		
Date:	1/11/2021	NAC Source Voltage:	20.4

Model #: PSN-64
Panel ID: RPS-12
Location: 2nd Flr

Max Panel Current (amps): 6

User assumes all responsibility to ensure the quantities and current draw values in this worksheet are accurate prior to submittal.

Panel Qty	Part #	Description	Standby (amps) Each	Standby (amps) Total	Alarm (amps) Each	Alarm (amps) Total
1	PSN-64	NAC Power Expander	0.075	0.075	0.075	0.075
			Panel Standby:	0.075	Panel Alarm:	0.075

NAC Circuits (See NAC Configuration below) Ckt	Use	Description	Class	Standby (amps) Total	Alarm (amps) Total
1	Notification	NAC 52	Class B	0.00000	0.15900
2	Notification	NAC 53	Class B	0.00000	0.55200
3	Notification	NAC 54	Class B	0.00000	0.55200
4	Notification	NAC 55	Class B	0.00000	0.41400
AUX	NAC 56	NAC 56	Class B	0.00000	0.55200
			NAC Standby:	0.00000	NAC Alarm: 2.22900

Battery Calculation Summary

	Standby (amps)		Alarm (amps)
Panel Current:	0.07500		0.07500
NAC Circuit Current:	0.00000		2.22900
Total Standby:	0.075000	Total Alarm:	2.30400
Standby Hours:	24	Alarm Mins:	5
AH Required:	1.80	AH Required:	0.20
Total Combined Standby & Alarm AmpHours Required:			2.00
Safety Margin:			20%
Required Battery AmpHours:			2.40
Battery AmpHours Provided:			7

POTTER

NAC Circuit Configuration & Voltage Drop *The Signature* *1/11/2021*

NAC 1 MAX Circuit Current (amps): 3 Source Voltage Used (VDC): 20.4
Class: Class B Usage: Notification Description: NAC 52

Wire Type	Ohms/1000ft	Length 1-Way	Actual Ohms	Max Load (amps	Volts @ EOL	Min Volts Req'd
#14 Solid	3.19	140	0.893	0.159	20.26	16

Circuit Devices Qty	Lookup Type	Description	Standby (amps) Each	Standby (amps) Total	Alarm (amps) Each	Alarm (amps) Total
3	User Defined	System Sensor P2L 15cd Temp High	0.000000	0.000000	0.053000	0.159000
		User can add devices on the fly to these bottom 5 rows (No lookup function)				
			Total Standby:	0.00000	Total Alarm:	0.15900

NAC 2 MAX Circuit Current (amps): 3 Source Voltage Used (VDC): 20.4
Class: Class B Usage: Notification Description: NAC 53

Wire Type	Ohms/1000ft	Length 1-Way	Actual Ohms	Max Load (amps	Volts @ EOL	Min Volts Req'd
#14 Solid	3.19	220	1.404	0.552	19.63	16

Circuit Devices Qty	Lookup Type	Description	Standby (amps) Each	Standby (amps) Total	Alarm (amps) Each	Alarm (amps) Total
4	User Defined	S/S HLF	0.000000	0.000000	0.138000	0.552000
		User can add devices on the fly to these bottom 5 rows (No lookup function)				
			Total Standby:	0.00000	Total Alarm:	0.55200

POTTER

NAC Circuit Configuration & Voltage Drop (cont'd) *The Signature* *1/11/2021*

NAC 3 MAX Circuit Current (amps): 3 Source Voltage Used (VDC): 20.4
Class: Class B Usage: Notification Description: NAC 54

Wire Type	Ohms/1000ft	Length 1-Way	Actual Ohms	Max Load (amps	Volts @ EOL	Min Volts Req'd
#14 Solid	3.19	280	1.786	0.552	19.41	16

Circuit Devices Qty	Lookup Type	Description	Standby (amps) Each	Standby (amps) Total	Alarm (amps) Each	Alarm (amps) Total
4	User Defined	S/S HLF	0.000000	0.000000	0.138000	0.552000
		User can add devices on the fly to these bottom 5 rows (No lookup function)				
			Total Standby:	0.00000	Total Alarm:	0.55200

BATTERY CALCS - BLDG 1 (CONT.)

SCALE : N/A

1

JSC ENGINEERS
MO COA NO. 2012006786 / KS COA NO. E-2818
1925 CENTRAL ST. SUITE #201
KANSAS CITY, MO 64108
phone: (816) 272-5289
email: jsmothers@jscengineers.com

LICENSED PROFESSIONAL ENGINEER — JESSEY P. BORRIS — NUMBER PE-2019041526
04-13-2022

FIRE ALARM CONTRACTOR:
SIG
SYSTEM INTEGRATION GROUP

PROJECT:
SIGNATURE AT PRYOR II
2100 AND 2150 NW LOWENSTEIN DR.
LEE'S SUMMIT, MISSOURI 64081

REVISIONS:	DATE / DESCRIPTION
1	
2	
3	
4	
5	

Copyright 2022 JSC Engineers

ISSUED:
PERMIT

SHEET TITLE:
BATTERY CALCULATIONS

DATE: 04.13.2022
JOB NO.: 22-094
SHEET:
FA306

POTTER
The Symbol of Protection

PSN-64
Battery & Voltage Drop
Calculations

Project Name:	The Signature	**Standby Hours:**	24
	BLDG 1-A	**Alarm Mins:**	5
Installed By:	System Integration Group	**Safety Margin:**	20%
Designed By:	David Johnson		
Date:	1/11/2021	**NAC Source Voltage:**	20.4

Model #: PSN-64
Panel ID: RPS-13
Location: 3rd Flr IDF 306

Max Panel Current (amps): 6

User assumes all responsibility to ensure the quantities and current draw values in this worksheet are accurate prior to submittal.

Panel Qty	Part #	Description	Standby (amps) Each	Standby (amps) Total	Alarm (amps) Each	Alarm (amps) Total
1	PSN-64	NAC Power Expander	0.075	0.075	0.075	0.075
			Panel Standby:	**0.075**	**Panel Alarm:**	**0.075**

NAC Circuits (See NAC Configuration below) Ckt	Use	Description	Class	Standby (amps) Total	Alarm (amps) Total
1	Notification	NAC 57	Class B	0.00000	0.15900
2	Notification	NAC 58	Class B	0.00000	0.55200
3	Notification	NAC 59	Class B	0.00000	0.55200
4	Notification	NAC 60	Class B	0.00000	0.41400
AUX	NAC 61	NAC 61		0.00000	0.55200
			NAC Standby:	**0.00000**	**NAC Alarm:** **2.22900**

Battery Calculation Summary

	Standby (amps)		Alarm (amps)
Panel Current:	0.07500		0.07500
NAC Circuit Current:	0.00000		2.22900
Total Standby:	**0.075000**	**Total Alarm:**	**2.30400**
Standby Hours:	24	**Alarm Mins:**	5
AH Required:	**1.80**	**AH Required:**	**0.20**
Total Combined Standby & Alarm AmpHours Required:			2.00
Safety Margin:			**20%**
Required Battery AmpHours:			**2.40**
Battery AmpHours Provided:			**7**

POTTER
The Symbol of Protection

NAC Circuit Configuration & Voltage Drop *The Signature* *1/11/2021*

NAC 1 **MAX Circuit Current (amps):** 3 **Source Voltage Used (VDC):** 20.4

Class: Class B **Usage:** Notification **Description:** NAC 57

Wire Type	Ohms/1000ft	Length 1-Way	Actual Ohms	Max Load (amps	Volts @ EOL	Min Volts Req'd
#14 Solid	3.19	140	0.893	0.159	20.26	16

Circuit Devices Qty	Lookup Type	Description	Standby (amps) Each	Standby (amps) Total	Alarm (amps) Each	Alarm (amps) Total
3	User Defined	System Sensor P2L 15cd Temp High	0.000000	0.000000	0.053000	0.159000
		User can add devices on the fly				
		to these bottom 5 rows				
		(No lookup function)				
			Total Standby:	**0.00000**	**Total Alarm:**	**0.15900**

NAC 2 **MAX Circuit Current (amps):** 3 **Source Voltage Used (VDC):** 20.4

Class: Class B **Usage:** Notification **Description:** NAC 58

Wire Type	Ohms/1000ft	Length 1-Way	Actual Ohms	Max Load (amps	Volts @ EOL	Min Volts Req'd
#14 Solid	3.19	220	1.404	0.552	19.63	16

Circuit Devices Qty	Lookup Type	Description	Standby (amps) Each	Standby (amps) Total	Alarm (amps) Each	Alarm (amps) Total
4	User Defined	S/S HLF	0.000000	0.000000	0.138000	0.552000
		User can add devices on the fly				
		to these bottom 5 rows				
		(No lookup function)				
			Total Standby:	**0.00000**	**Total Alarm:**	**0.55200**

POTTER
The Symbol of Protection

NAC Circuit Configuration & Voltage Drop (cont'd) *The Signature* *1/11/2021*

NAC 3 **MAX Circuit Current (amps):** 3 **Source Voltage Used (VDC):** 20.4

Class: Class B **Usage:** Notification **Description:** NAC 59

Wire Type	Ohms/1000ft	Length 1-Way	Actual Ohms	Max Load (amps	Volts @ EOL	Min Volts Req'd
#14 Solid	3.19	280	1.786	0.552	19.41	16

Circuit Devices Qty	Lookup Type	Description	Standby (amps) Each	Standby (amps) Total	Alarm (amps) Each	Alarm (amps) Total
4	User Defined	S/S HLF	0.000000	0.000000	0.138000	0.552000
		User can add devices on the fly				
		to these bottom 5 rows				
		(No lookup function)				
			Total Standby:	**0.00000**	**Total Alarm:**	**0.55200**

NAC 4 **MAX Circuit Current (amps):** 3 **Source Voltage Used (VDC):** 20.4

Class: Class B **Usage:** Notification **Description:** NAC 60

Wire Type	Ohms/1000ft	Length 1-Way	Actual Ohms	Max Load (amps	Volts @ EOL	Min Volts Req'd
#14 Solid	3.19	250	1.595	0.414	19.74	16

Circuit Devices Qty	Lookup Type	Description	Standby (amps) Each	Standby (amps) Total	Alarm (amps) Each	Alarm (amps) Total
3	User Defined	S/S HLF	0.000000	0.000000	0.138000	0.414000
		User can add devices on the fly				
		to these bottom 5 rows				
		(No lookup function)				
			Total Standby:	**0.00000**	**Total Alarm:**	**0.41400**

NAC 5 **MAX Circuit Current (amps):** 3 **Source Voltage Used (VDC):** 20.4

Usage: Notification **Description:** NAC 61

Wire Type	Ohms/1000ft	Length 1-Way	Actual Ohms	Max Load (amps	Volts @ Last Device	Min Volts Req'd
#14 Solid	3.19	210	1.340	0.552	19.66	16

Circuit Devices Qty	Lookup Type	Description	Standby (amps) Each	Standby (amps) Total	Alarm (amps) Each	Alarm (amps) Total
4	User Defined	S/S HLF	0.000000	0.000000	0.138000	0.552000
		User can add devices on the fly				
		to these bottom 5 rows				
		(No lookup function)				
			Total Standby:	**0.00000**	**Total Alarm:**	**0.55200**

BATTERY CALCS - BLDG 1 (CONT.)

SCALE : N/A

1

JSC ENGINEERS
MO COA NO. 2012006786 / KS COA NO. E-2818
1925 CENTRAL ST. SUITE #201
KANSAS CITY, MO 64108
phone: (816) 272-5289
email: jsmothers@jscengineers.com

STATE OF MISSOURI
JEFFREY P. BORRIS
NUMBER PE-2019041526
PROFESSIONAL ENGINEER
04-13-2022

FIRE ALARM CONTRACTOR:

SIG

SYSTEM INTEGRATION GROUP

PROJECT:
SIGNATURE AT PRYOR II
2100 AND 2150 NW LOWENSTEIN DR.
LEE'S SUMMIT, MISSOURI 64081

REVISIONS: DATE / DESCRIPTION
1
2
3
4
5

Copyright 2022
JSC Engineers

ISSUED:
PERMIT

SHEET TITLE:
BATTERY CALCULATIONS

DATE: 04.13.2022
JOB NO.: 22-094
SHEET:
FA307

Honeywell — THE POWER OF CONNECTION — Farenhyt Series

IFP-300 Battery Calculation FACP

Secondary Power Source Requirements Building 2

Device Type	Standby Current (amps) Qty		Current Draw		Total	Secondary Alarm Current (amps) Qty		Current Draw		Total
1. Control Panel										
IFP-300 Control Panel	1	x	0.190000	=	0.190000	1	x	0.250000	=	0.250000
2. Addressable SLC Devices										
IDP-PHOTO	0	x	0.000300	=		0	x	0.000300	=	
IDP-PHOTO-T	0	x	0.000300	=		0	x	0.000300	=	
IDP-PHOTOR	0	x	0.000300	=		0	x	0.000300	=	
IDP-ION	0	x	0.000300	=		0	x	0.000300	=	
IDP-HEAT	0	x	0.000300	=		0	x	0.000300	=	
IDP-HEAT-HT	0	x	0.000300	=		0	x	0.000300	=	
IDP-HEAT-ROR	0	x	0.000300	=		0	x	0.000300	=	
IDP-BEAM	0	x	0.002000	=		0	x	0.002000	=	
IDP-BEAM-T	0	x	0.002000	=		0	x	0.002000	=	
IDP-FIRE-CO	0	x	0.030000	=		0	x	0.007200	=	
IDP-ACCLIMATE	0	x	0.000300	=		0	x	0.000300	=	
3. Addressable SLC Detectors										
IDP-CONTROL	0	x	0.000375	=		0	x	0.000375	=	
IDP-MONITOR	5	x	0.000375	=	0.001875	5	x	0.000375	=	0.001875
IDP-MINIMON	0	x	0.000375	=		0	x	0.000375	=	
IDP-PULL-SA	0	x	0.000375	=		0	x	0.000375	=	
IDP-PULL-DA	1	x	0.000375	=	0.000375	1	x	0.000375	=	0.000375
IDP-MONITOR-2	0	x	0.000750	=		0	x	0.000750	=	
IDP-MONITOR-10	0	x	0.003500	=		0	x	0.003500	=	
IDP-RELAY-6	0	x	0.001450	=		0	x	0.001450	=	
IDP-CONTROL-6	0	x	0.002250	=		0	x	0.002250	=	
IDP-RELAY	13	x	0.000255	=	0.003315	13	x	0.000255	=	0.003315
IDP-RELAYMON-2	0	x	0.001300	=		0	x	0.024000	=	
IDP-ZONE	0	x	0.002000	=		0	x	0.002000	=	
IDP-ZONE-6	0	x	0.002000	=		0	x	0.002000	=	
4. SLC Accessories										
B200S	0	x	0.000300	=		0	x	0.000300	=	
B200S-LF	0	x	0.003000	=		0	x	0.000300	=	
B200SR	0	x	0.000300	=		0	x	0.000300	=	
B200SR-LF	0	x	0.001000	=		0	x	0.125000	=	
B224RB	0	x	0.000500	=		0	x	0.000500	=	
RTS151KEY	0	x	0.000000	=		0	x	0.007500	=	
RA100Z	0	x	0.000000	=		0	x	0.010000	=	
5. Auxiliary Power Draw - SLC Devices										
IDP-CONTROL (Aux. Power)	0	x	0.001700	=		0	x	0.007000	=	
IDP-CONTROL-6 (Aux. Power)	0	x	0.008000	=		0	x	0.020000	=	
IDP-ZONE (Aux. Power)	0	x	0.012000	=		0	x	0.050000	=	
IDP-ZONE-6 (Aux. Power)	0	x	0.050000	=		0	x	0.270000	=	
B200S (Aux. Power)	0	x	0.000500	=		0	x	0.035000	=	
B200S-LF (Aux. Power)	0	x	0.000550	=		0	x	0.140000	=	
B200SR (Aux. Power)	0	x	0.000500	=		0	x	0.035000	=	
B200SR-LF (Aux. Power)	0	x	0.001000	=		0	x	0.125000	=	
6. SLC Isolator Devices										
IDP-ISO	5	x	0.000450	=	0.002250	5	x	0.000450	=	0.002250
B224BI	0	x	0.000500	=		0	x	0.000500	=	
7. Accessory Modules										
RA-2000	0	x	0.025000	=		0	x	0.050000	=	
RA-2000GRAY	0	x	0.025000	=		0	x	0.050000	=	
6815	0	x	0.078000	=		0	x	0.078000	=	
RA-100	0	x	0.020000	=		0	x	0.025000	=	
RA-1000	1	x	0.020000	=	0.020000	1	x	0.025000	=	0.025000
RA-1000R	0	x	0.020000	=		0	x	0.025000	=	
5824	0	x	0.045000	=		0	x	0.045000	=	
5496	0	x	0.010000	=		0	x	0.010000	=	
RPS-1000	2	x	0.010000	=	0.020000	2	x	0.010000	=	0.020000
5865-4	0	x	0.035000	=		0	x	0.145000	=	
5865-3	0	x	0.035000	=		0	x	0.145000	=	
5880	0	x	0.035000	=		0	x	0.200000	=	
5883	0	x	0.000000	=		0	x	0.220000	=	
8. Network Cards										
SK-NIC	1	x	0.021000	=	0.021000	1	x	0.021000	=	0.021000
SK-FML	0	x	0.053000	=		0	x	0.053000	=	
SK-FSL	1	x	0.079000	=	0.079000	1	x	0.079000	=	0.079000
9. Auxiliary Devices										
IPDACT-2	0	x	0.093000	=		0	x	0.136000	=	
IPDACT-2UD	0	x	0.098000	=		0	x	0.155000	=	
CELL-MOD	1	x	0.055000	=	0.055000	1	x	0.100000	=	0.100000
CELL-CAB-SK	0	x	0.055000	=		0	x	0.100000	=	
10. Miscellaneous Devices										
Conventional Detectors	0	x	0.000000	=		0	x	0.000000	=	
R-10E	0	x	0.020000	=		0	x	0.020000	=	
DH24120FPC	0	x	0.020000	=		0	x	0.000000	=	
IDP-HEAT-W	1	x	0.000300	=	0.000300	1	x	0.000000	=	0.000000
IDP-PHOTO-W	21	x	0.000300	=	0.006300	21	x	0.000000	=	0.000000
Miscellaneous Device 5	0	x	0.000000	=		0	x	0.000000	=	
11. Output Circuits										
NAC 1			0.000000	=				0.221000	=	0.221000
NAC 2			0.000000	=				0.593000	=	0.593000
NAC 3			0.000000	=				0.974000	=	0.974000
Constant-Power 1			0.000000	=				0.000000	=	
				Total Standby Load	**0.399415**				**Total Alarm Load**	**2.290815**

Honeywell — THE POWER OF CONNECTION — Farenhyt Series

IFP-300 Battery Calculation FACP

Note 1: You are fully responsible for verifying these calculations.
Note 2: Use the dropdowns in the **yellow** cells to enter values.

Calculation in Total Sheet

			Required Standby Time in Hours		
			24 Hours		
Standby Load Current	**0.39942 Amps**	x	24	=	9.586 AH
			Required Alarm Time in Minutes		
			5 Minutes		
Alarm Load Current (Amps)	**2.29081 Amps**	x	0.084	=	0.192 AH
			Total Current Load		**9.778 AH**
	Multiply by the Derating Factor		1.2	=	x 1.20
			Total Ampere Hours Required		**11.73 AH**

Recommended Batteries: BAT-12120 - 12AH Batteries

Battery Check

The batteries can be charged by the IFP-300 Charger.
The batteries can be housed in the IFP-300 Cabinet.

Current Draw Check

Circuit#1 current is within the limitations of the circuit.
Circuit#2 current is within the limitations of the circuit.
Circuit#3 current is within the limitations of the circuit.
Circuit#4 current is within the limitations of the circuit.
IFP-300 Control Panel:
The output current is within the panel's limitations.

Honeywell — THE POWER OF CONNECTION — Farenhyt Series

IFP-300 Circuit Detail FACP

NAC 1

Device	Qty		Non-Alarm Draw		Total	Qty		Alarm Draw		Total
System Sensor P2L 15cd Te	6	x	0.000000	=	0.000000	6	x	0.053000	=	0.318000
S S SL 15cd	2	x	0.000000	=	0.000000	2	x	0.043000	=	0.086000
	0	x	0.000000	=		0	x	0.000000	=	
	0	x	0.000000	=		0	x	0.000000	=	
	0	x	0.000000	=		0	x	0.000000	=	
	0	x	0.000000	=		0	x	0.000000	=	
	0	x	0.000000	=		0	x	0.000000	=	
	0	x	0.000000	=		0	x	0.000000	=	
	0	x	0.000000	=		0	x	0.000000	=	
	0	x	0.000000	=		0	x	0.000000	=	
			Total Standby Load		**0.000000**			**Total Alarm Load**		**0.404000**

NAC 2

Device	Qty		Non-Alarm Draw		Total	Qty		Alarm Draw		Total
S/S HLF	1	x	0.000000	=	0.000000	1	x	0.073000	=	0.073000
S S P2L 75 cd Temp High	1	x	0.000000	=	0.000000	1	x	0.119000	=	0.119000
S S SL 15cd	5	x	0.000000	=	0.000000	5	x	0.043000	=	0.215000
	0	x	0.000000	=		0	x	0.000000	=	
	0	x	0.000000	=		0	x	0.000000	=	
	0	x	0.000000	=		0	x	0.000000	=	
	0	x	0.000000	=		0	x	0.000000	=	
	0	x	0.000000	=		0	x	0.000000	=	
	0	x	0.000000	=		0	x	0.000000	=	
	0	x	0.000000	=		0	x	0.000000	=	
	0	x	0.000000	=		0	x	0.000000	=	
			Total Standby Load		**0.000000**			**Total Alarm Load**		**0.407000**

NAC 3

Device	Qty		Non-Alarm Draw		Total	Qty		Alarm Draw		Total
S/S HLF	4	x	0.000000	=	0.000000	4	x	0.043000	=	0.172000
	0	x	0.000000	=		0	x	0.073000	=	
	0	x	0.000000	=		0	x	0.139000	=	
	0	x	0.000000	=		0	x	0.160000	=	
	0	x	0.000000	=		0	x	0.000000	=	
	0	x	0.000000	=		0	x	0.000000	=	
	0	x	0.000000	=		0	x	0.000000	=	
	0	x	0.000000	=		0	x	0.000000	=	
	0	x	0.000000	=		0	x	0.000000	=	
	0	x	0.000000	=		0	x	0.000000	=	
			Total Standby Load		**0.000000**			**Total Alarm Load**		**0.172000**

Trigger

Device	Qty		Non-Alarm Draw		Total	Qty		Alarm Draw		Total
5499	3	x	0.020000	=	0.060000	3	x	0.015000	=	0.045000
	0	x	0.020000	=		0	x	0.000000	=	
	0	x	0.000000	=		0	x	0.000000	=	
	0	x	0.000000	=		0	x	0.000000	=	
	0	x	0.000000	=		0	x	0.000000	=	
	0	x	0.000000	=		0	x	0.000000	=	
	0	x	0.000000	=		0	x	0.000000	=	
	0	x	0.000000	=		0	x	0.000000	=	
	0	x	0.000000	=		0	x	0.000000	=	
	0	x	0.000000	=		0	x	0.000000	=	
			Total Standby Load		**0.060000**			**Total Alarm Load**		**0.045000**

Honeywell — THE POWER OF CONNECTION — Farenhyt Series

IFP-300 EOL Voltage Drop FACP

Starting Voltage	20.4 Volts
Minimum Voltage @ EOL	16 Volts
Voltage Drop Warning %	10.00%

Circuit Name	Current Draw Amps	Wire Type AWG	Resistance Ohms/1000 ft.	Length Feet (One Way)	Actual Resistance Ohms	Voltage @ EOL Volts	Percent Drop Percent
NAC 1	0.404	#14 Solid	3.07	425	2.61	19.35	5.17%
NAC 2	0.407	#14 Solid	3.07	180	1.11	19.95	2.20%
NAC 3	0.172	#14 Solid	3.07	250	1.54	20.14	1.28%
Trigger	0.060	#14 Solid	3.07	150	0.92	20.34	0.27%

Resistance Table

Wire Type AWG	Resitance Ohms/1000 ft.
#10 Solid	1.21
#10 Stranded	1.24
#12 Solid	1.93
#12 Stranded	1.98
#14 Solid	3.07
#14 Stranded	3.14
#16 Solid	4.89
#16 Stranded	4.99
#18 Solid	7.77
#18 Stranded	7.95

Note: All Resistance values are taken from Table 8 Conductor Properties of the NFPA 70 National Electrical Code. All values are for Direct Current Resistance at 75°C (167°F).

POTTER — The Symbol of Protection

PSN-64
Battery & Voltage Drop
Calculations

Project Name: The Signature
Building 2
Installed By: System Integration Group
Designed By: David Johnson
Date: 1/11/2021
Standby Hours: 24
Alarm Mins: 5
Safety Margin: 20%
NAC Source Voltage: 20.4

Model #: PSN-64
Panel ID: RPS-1
Location: MDP
Max Panel Current (amps): 6

User assumes all responsibility to ensure the quantities and current draw values in this worksheet are accurate prior to submittal.

Qty	Panel Part #	Description	Standby (amps) Each	Total	Alarm (amps) Each	Total
1	PSN-64	NAC Power Expander	0.075	0.075	0.075	0.075
			Panel Standby:	**0.075**	**Panel Alarm:**	**0.075**

Ckt	NAC Circuits (See NAC Configuration below) Use	Description	Class	Standby (amps) Total	Alarm (amps) Total
1	Notification	NAC 4	Class B	0.00000	0.27600
2	Notification	NAC 5	Class B	0.00000	0.55200
3	Notification	NAC 6	Class B	0.00000	0.41400
4	Notification	Waterflow	Class B	0.00000	0.16400
AUX				0.00000	0.00000
			NAC Standby:	**0.00000**	**NAC Alarm:** **1.40600**

Battery Calculation Summary

	Standby (amps)		Alarm (amps)
Panel Current:	0.07500		0.07500
NAC Circuit Current:	0.00000		1.40600
Total Standby:	**0.075000**	**Total Alarm:**	**1.48100**
Standby Hours:	24	**Alarm Mins:**	5
AH Required:	**1.80**	**AH Required:**	**0.13**

Total Combined Standby & Alarm AmpHours Required: 1.93
Safety Margin: 20%
Required Battery AmpHours: 2.32
Battery AmpHours Provided: 7

POTTER — The Symbol of Protection

NAC Circuit Configuration & Voltage Drop — *The Signature* — *1/11/2021*

NAC 1 — MAX Circuit Current (amps): 3 — Source Voltage Used (VDC): 20.4
Class: Class B — Usage: Notification — Description: NAC 4

Wire Type	Ohms/1000ft	Length 1-Way	Actual Ohms	Max Load (amps	Volts @ EOL	Min Volts Req'd
#14 Solid	3.19	140	0.893	0.276	20.15	16

Qty	Circuit Devices Lookup Type	Description	Standby (amps) Each	Total	Alarm (amps) Each	Total
2	User Defined	S/S HLF	0.000000	0.000000	0.138000	0.276000
		User can add devices on the fly to these bottom 5 rows (No lookup function)				
			Total Standby:	**0.00000**	**Total Alarm:**	**0.27600**

NAC 2 — MAX Circuit Current (amps): 3 — Source Voltage Used (VDC): 20.4
Class: Class B — Usage: Notification — Description: NAC 5

Wire Type	Ohms/1000ft	Length 1-Way	Actual Ohms	Max Load (amps	Volts @ EOL	Min Volts Req'd
#14 Solid	3.19	180	1.148	0.552	19.77	16

Qty	Circuit Devices Lookup Type	Description	Standby (amps) Each	Total	Alarm (amps) Each	Total
4	User Defined	S/S HLF	0.000000	0.000000	0.138000	0.552000
		User can add devices on the fly to these bottom 5 rows (No lookup function)				
			Total Standby:	**0.00000**	**Total Alarm:**	**0.55200**

POTTER — The Symbol of Protection

NAC Circuit Configuration & Voltage Drop (cont'd) — *The Signature* — *1/11/2021*

NAC 3 — MAX Circuit Current (amps): 3 — Source Voltage Used (VDC): 20.4
Class: Class B — Usage: Notification — Description: NAC 6

Wire Type	Ohms/1000ft	Length 1-Way	Actual Ohms	Max Load (amps	Volts @ EOL	Min Volts Req'd
#14 Solid	3.19	140	0.893	0.414	20.03	16

Qty	Circuit Devices Lookup Type	Description	Standby (amps) Each	Total	Alarm (amps) Each	Total
3	User Defined	S/S HLF	0.000000	0.000000	0.138000	0.414000
		User can add devices on the fly to these bottom 5 rows (No lookup function)				
			Total Standby:	**0.00000**	**Total Alarm:**	**0.41400**

NAC 4 — MAX Circuit Current (amps): 3 — Source Voltage Used (VDC): 20.4
Class: Class B — Usage: Notification — Description: Waterflow

Wire Type	Ohms/1000ft	Length 1-Way	Actual Ohms	Max Load (amps	Volts @ EOL	Min Volts Req'd
#14 Solid	3.19	220	1.404	0.164	20.17	16

Qty	Circuit Devices Lookup Type	Description	Standby (amps) Each	Total	Alarm (amps) Each	Total
1	User Defined	S S P2L 110cd Temp High	0.000000	0.000000	0.164000	0.164000
		User can add devices on the fly to these bottom 5 rows (No lookup function)				
			Total Standby:	**0.00000**	**Total Alarm:**	**0.16400**

AUX Power — MAX Circuit Current (amps): 3 — Source Voltage Used (VDC): 20.4
Usage: — Description:

Wire Type	Ohms/1000ft	Length 1-Way	Actual Ohms	Max Load (amps	Volts @ Last Device	Min Volts Req'd
#12 Solid	2.01		0.000	0.000	20.40	16

Qty	Circuit Devices Lookup Type	Description	Standby (amps) Each	Total	Alarm (amps) Each	Total
		User can add devices on the fly to these bottom 5 rows (No lookup function)				
			Total Standby:	**0.00000**	**Total Alarm:**	**0.00000**

BATTERY CALCS - BLDG 2

SCALE : N/A

1

JSC ENGINEERS
MO COA NO. 2012006786 / KS COA NO. E-2818
1925 CENTRAL ST. SUITE #201
KANSAS CITY, MO 64108
phone: (816) 272-5289
email: jsmothers@jscengineers.com
STATE OF MISSOURI — JESSEY P. BORRIS — NUMBER PE-2019041526 — PROFESSIONAL ENGINEER
04-13-2022

FIRE ALARM CONTRACTOR:
SIG
SYSTEM INTEGRATION GROUP

PROJECT:
SIGNATURE AT PRYOR II
2100 AND 2150 NW LOWENSTEIN DR.
LEE'S SUMMIT, MISSOURI 64081

REVISIONS: DATE / DESCRIPTION
1
2
3
4
5

Copyright 2022 JSC Engineers

ISSUED:
PERMIT

SHEET TITLE:
BATTERY CALCULATIONS

DATE: 04.13.2022
JOB NO.: 22-094
SHEET:
FA308

7 6 5 4 3 2 1

E D C B A

POTTER The Symbol of Protection

PSN-106
Battery & Voltage Drop Calculations

Project Name:	The Signature	Standby Hours:	24
	Building 2	Alarm Mins:	5
Installed By:	System Integration Group	Safety Margin:	20%
Designed By:	David Johnson		
Date:	1/11/2022	NAC Source Voltage:	20.4

Model #: PSN-106
Panel ID: RPS- 2
Location: MDP Room
Max Panel Current (amps): 10

User assumes all responsibility to ensure the quantities and current draw values in this worksheet are accurate prior to submittal.

Qty	Panel Part #	Description	Standby (amps) Each	Standby (amps) Total	Alarm (amps) Each	Alarm (amps) Total
1	PSN-106	NAC Power Expander	0.075	0.075	0.075	0.075
			Panel Standby:	0.075	Panel Alarm:	0.075

Ckt	Use	Description	Class	Standby (amps) Total	Alarm (amps) Total
1	Notification	NAC 7	Class B	0.00000	0.35900
2	Notification	NAC 8	Class B	0.00000	0.55200
3	Notification	NAC 9	Class B	0.00000	0.27600
4	Notification	NAC 10	Class B	0.00000	0.55200
5	Notification	NAC 11	Class B	0.00000	0.41400
6	Notification	NAC 12	Class B	0.00000	0.55200
AUX	Unused			0.00000	0.00000
			NAC Standby:	0.00000	NAC Alarm: 2.70500

Battery Calculation Summary

	Standby (amps)		Alarm (amps)
Panel Current:	0.07500		0.07500
NAC Circuit Current:	0.00000		2.70500
Total Standby:	0.075000	Total Alarm:	2.78000
Standby Hours:	24	Alarm Mins:	5
AH Required:	1.80	AH Required:	0.24
Total Combined Standby & Alarm AmpHours Required:			2.04
Efficiency Factor:			20%
Required Battery AmpHours:			2.45
Battery AmpHours Provided:			7

POTTER The Symbol of Protection

NAC Circuit Configuration & Voltage Drop *The Signature* *1/11/2022*

NAC 1 MAX Circuit Current (amps): 3 Source Voltage Used (VDC): 20.4

Class: Class B Usage: Notification Description: NAC 7

Wire Type	Ohms/1000ft	Length 1-Way	Actual Ohms	Max Load (amps)	Volts @ EOL	Min Volts Req'd
#14 Solid	3.19	480	3.062	0.359	19.30	16

Qty	Lookup Type	Description	Circuit Devices Standby (amps) Each	Standby (amps) Total	Alarm (amps) Each	Alarm (amps) Total
6	User Defined	System Sensor P2L 15cd Temp Hig	0.000000	0.000000	0.053000	0.318000
1	User Defined	S/S SCL 15cd	0.000000	0.000000	0.041000	0.041000
		User can add devices on the fly to these bottom 5 rows (No lookup function)				
			Total Standby:	0.00000	Total Alarm:	0.35900

NAC 2 MAX Circuit Current (amps): 3 Source Voltage Used (VDC): 20.4

Class: Class B Usage: Notification Description: NAC 8

Wire Type	Ohms/1000ft	Length 1-Way	Actual Ohms	Max Load (amps)	Volts @ EOL	Min Volts Req'd
#14 Solid	3.19	250	1.595	0.552	19.52	16

Qty	Lookup Type	Description	Circuit Devices Standby (amps) Each	Standby (amps) Total	Alarm (amps) Each	Alarm (amps) Total
4	User Defined	S/S HLF	0.000000	0.000000	0.138000	0.552000
		User can add devices on the fly to these bottom 5 rows (No lookup function)				
			Total Standby:	0.00000	Total Alarm:	0.55200

POTTER The Symbol of Protection

NAC Circuit Configuration & Voltage Drop (cont'd) *The Signature* *1/11/2022*

NAC 3 MAX Circuit Current (amps): 3 Source Voltage Used (VDC): 20.4

Class: Class B Usage: Notification Description: NAC 9

Wire Type	Ohms/1000ft	Length 1-Way	Actual Ohms	Max Load (amps)	Volts @ EOL	Min Volts Req'd
#14 Solid	3.19	170	1.085	0.276	20.10	16

Qty	Lookup Type	Description	Circuit Devices Standby (amps) Each	Standby (amps) Total	Alarm (amps) Each	Alarm (amps) Total
2	User Defined	S/S HLF	0.000000	0.000000	0.138000	0.276000
		User can add devices on the fly to these bottom 5 rows (No lookup function)				
			Total Standby:	0.00000	Total Alarm:	0.27600

NAC 4 MAX Circuit Current (amps): 3 Source Voltage Used (VDC): 20.4

Class: Class B Usage: Notification Description: NAC 10

Wire Type	Ohms/1000ft	Length 1-Way	Actual Ohms	Max Load (amps)	Volts @ EOL	Min Volts Req'd
#14 Solid	3.19	210	1.340	0.552	19.66	16

Qty	Lookup Type	Description	Circuit Devices Standby (amps) Each	Standby (amps) Total	Alarm (amps) Each	Alarm (amps) Total
4	User Defined	S/S HLF	0.000000	0.000000	0.138000	0.552000
		User can add devices on the fly to these bottom 5 rows (No lookup function)				
			Total Standby:	0.00000	Total Alarm:	0.55200

POTTER The Symbol of Protection

NAC Circuit Configuration & Voltage Drop (cont'd) *The Signature* *1/11/2022*

NAC 5 MAX Circuit Current (amps): 3 Source Voltage Used (VDC): 20.4

Class: Class B Usage: Notification Description: NAC 11

Wire Type	Ohms/1000ft	Length 1-Way	Actual Ohms	Max Load (amps)	Volts @ EOL	Min Volts Req'd
#14 Solid	3.19	170	1.085	0.414	19.95	16

Qty	Lookup Type	Description	Circuit Devices Standby (amps) Each	Standby (amps) Total	Alarm (amps) Each	Alarm (amps) Total
3	User Defined	S/S HLF	0.000000	0.000000	0.138000	0.414000
		User can add devices on the fly to these bottom 5 rows (No lookup function)				
			Total Standby:	0.00000	Total Alarm:	0.41400

NAC 6 MAX Circuit Current (amps): 3 Source Voltage Used (VDC): 20.4

Class: Class B Usage: Notification Description: NAC 12

Wire Type	Ohms/1000ft	Length 1-Way	Actual Ohms	Max Load (amps)	Volts @ EOL	Min Volts Req'd
#14 Solid	3.19	240	1.531	0.552	19.55	16

Qty	Lookup Type	Description	Circuit Devices Standby (amps) Each	Standby (amps) Total	Alarm (amps) Each	Alarm (amps) Total
4	User Defined	S/S HLF	0.000000	0.000000	0.138000	0.552000
		User can add devices on the fly to these bottom 5 rows (No lookup function)				
			Total Standby:	0.00000	Total Alarm:	0.55200

AUX Power MAX Circuit Current (amps): 3 Source Voltage Used (VDC): 20.4

Usage: Unused Description:

Wire Type	Ohms/1000ft	Length 1-Way	Actual Ohms	Max Load (amps)	Volts @ Last Device	Min Volts Req'd
#14 Solid	3.19	475	3.031	0.000	20.40	16

Qty	Lookup Type	Description	Circuit Devices Standby (amps) Each	Standby (amps) Total	Alarm (amps) Each	Alarm (amps) Total
			Total Standby:	0.00000	Total Alarm:	0.00000

POTTER The Symbol of Protection

PSN-106
Battery & Voltage Drop Calculations

Project Name:	The Signature	Standby Hours:	24
	Building 2	Alarm Mins:	5
Installed By:	System Integration Group	Safety Margin:	20%
Designed By:	David Johnson		
Date:	1/11/2022	NAC Source Voltage:	20.4

Model #: PSN-106
Panel ID: RPS-3
Location: MDP Room
Max Panel Current (amps): 10

User assumes all responsibility to ensure the quantities and current draw values in this worksheet are accurate prior to submittal.

Qty	Panel Part #	Description	Standby (amps) Each	Standby (amps) Total	Alarm (amps) Each	Alarm (amps) Total
1	PSN-106	NAC Power Expander	0.075	0.075	0.075	0.075
			Panel Standby:	0.075	Panel Alarm:	0.075

Ckt	Use	Description	Class	Standby (amps) Total	Alarm (amps) Total
1	Notification	NAC 13	Class B	0.00000	0.41400
2	Notification	NAC 14	Class B	0.00000	0.55200
3	Notification	NAC 15	Class B	0.00000	0.27600
4	Notification	NAC 16	Class B	0.00000	0.55200
5	Notification	NAC 17	Class B	0.00000	0.41400
6	Notification	NAC 18	Class B	0.00000	0.55200
AUX	Unused			0.00000	0.00000
			NAC Standby:	0.00000	NAC Alarm: 2.76000

Battery Calculation Summary

	Standby (amps)		Alarm (amps)
Panel Current:	0.07500		0.07500
NAC Circuit Current:	0.00000		2.76000
Total Standby:	0.075000	Total Alarm:	2.83500
Standby Hours:	24	Alarm Mins:	5
AH Required:	1.80	AH Required:	0.24
Total Combined Standby & Alarm AmpHours Required:			2.04
Efficiency Factor:			20%
Required Battery AmpHours:			2.45
Battery AmpHours Provided:			7

POTTER The Symbol of Protection

NAC Circuit Configuration & Voltage Drop *The Signature* *1/11/2022*

NAC 1 MAX Circuit Current (amps): 3 Source Voltage Used (VDC): 20.4

Class: Class B Usage: Notification Description: NAC 13

Wire Type	Ohms/1000ft	Length 1-Way	Actual Ohms	Max Load (amps)	Volts @ EOL	Min Volts Req'd
#14 Solid	3.19	370	2.361	0.414	19.42	16

Qty	Lookup Type	Description	Circuit Devices Standby (amps) Each	Standby (amps) Total	Alarm (amps) Each	Alarm (amps) Total
3	User Defined	S/S HLF	0.000000	0.000000	0.138000	0.414000
		User can add devices on the fly to these bottom 5 rows (No lookup function)				
			Total Standby:	0.00000	Total Alarm:	0.41400

NAC 2 MAX Circuit Current (amps): 3 Source Voltage Used (VDC): 20.4

Class: Class B Usage: Notification Description: NAC 14

Wire Type	Ohms/1000ft	Length 1-Way	Actual Ohms	Max Load (amps)	Volts @ EOL	Min Volts Req'd
#14 Solid	3.19	280	1.786	0.552	19.41	16

Qty	Lookup Type	Description	Circuit Devices Standby (amps) Each	Standby (amps) Total	Alarm (amps) Each	Alarm (amps) Total
4	User Defined	S/S HLF	0.000000	0.000000	0.138000	0.552000
		User can add devices on the fly to these bottom 5 rows (No lookup function)				
			Total Standby:	0.00000	Total Alarm:	0.55200

POTTER The Symbol of Protection

NAC Circuit Configuration & Voltage Drop (cont'd) *The Signature* *1/11/2022*

NAC 3 MAX Circuit Current (amps): 3 Source Voltage Used (VDC): 20.4

Class: Class B Usage: Notification Description: NAC 15

Wire Type	Ohms/1000ft	Length 1-Way	Actual Ohms	Max Load (amps)	Volts @ EOL	Min Volts Req'd
#14 Solid	3.19	200	1.276	0.276	20.05	16

Qty	Lookup Type	Description	Circuit Devices Standby (amps) Each	Standby (amps) Total	Alarm (amps) Each	Alarm (amps) Total
2	User Defined	S/S HLF	0.000000	0.000000	0.138000	0.276000
		User can add devices on the fly to these bottom 5 rows (No lookup function)				
			Total Standby:	0.00000	Total Alarm:	0.27600

NAC 4 MAX Circuit Current (amps): 3 Source Voltage Used (VDC): 20.4

Class: Class B Usage: Notification Description: NAC 16

Wire Type	Ohms/1000ft	Length 1-Way	Actual Ohms	Max Load (amps)	Volts @ EOL	Min Volts Req'd
#14 Solid	3.19	240	1.531	0.552	19.55	16

Qty	Lookup Type	Description	Circuit Devices Standby (amps) Each	Standby (amps) Total	Alarm (amps) Each	Alarm (amps) Total
4	User Defined	S/S HLF	0.000000	0.000000	0.138000	0.552000
		User can add devices on the fly to these bottom 5 rows (No lookup function)				
			Total Standby:	0.00000	Total Alarm:	0.55200

POTTER The Symbol of Protection

NAC Circuit Configuration & Voltage Drop (cont'd) *The Signature* *1/11/2022*

NAC 5 MAX Circuit Current (amps): 3 Source Voltage Used (VDC): 20.4

Class: Class B Usage: Notification Description: NAC 17

Wire Type	Ohms/1000ft	Length 1-Way	Actual Ohms	Max Load (amps)	Volts @ EOL	Min Volts Req'd
#14 Solid	3.19	200	1.276	0.414	19.87	16

Qty	Lookup Type	Description	Circuit Devices Standby (amps) Each	Standby (amps) Total	Alarm (amps) Each	Alarm (amps) Total
3	User Defined	S/S HLF	0.000000	0.000000	0.138000	0.414000
		User can add devices on the fly to these bottom 5 rows (No lookup function)				
			Total Standby:	0.00000	Total Alarm:	0.41400

NAC 6 MAX Circuit Current (amps): 3 Source Voltage Used (VDC): 20.4

Class: Class B Usage: Notification Description: NAC 18

Wire Type	Ohms/1000ft	Length 1-Way	Actual Ohms	Max Load (amps)	Volts @ EOL	Min Volts Req'd
#14 Solid	3.19	270	1.723	0.552	19.45	16

Qty	Lookup Type	Description	Circuit Devices Standby (amps) Each	Standby (amps) Total	Alarm (amps) Each	Alarm (amps) Total
4	User Defined	S/S HLF	0.000000	0.000000	0.138000	0.552000
		User can add devices on the fly to these bottom 5 rows (No lookup function)				
			Total Standby:	0.00000	Total Alarm:	0.55200

AUX Power MAX Circuit Current (amps): 3 Source Voltage Used (VDC): 20.4

Usage: Unused Description:

Wire Type	Ohms/1000ft	Length 1-Way	Actual Ohms	Max Load (amps)	Volts @ Last Device	Min Volts Req'd
#14 Solid	3.19	475	3.031	0.000	20.40	16

Qty	Lookup Type	Description	Circuit Devices Standby (amps) Each	Standby (amps) Total	Alarm (amps) Each	Alarm (amps) Total
			Total Standby:	0.00000	Total Alarm:	0.00000

BATTERY CALCS - BLDG 2 (CONT.)

SCALE : N/A

1

JSC ENGINEERS
MO COA NO. 2012006786 / KS COA NO. E-2818
1925 CENTRAL ST. SUITE #201
KANSAS CITY, MO 64108
phone: (816) 272-5289
email: jsmothers@jscengineers.com

STATE OF MISSOURI JESSEY P. BORRIS NUMBER PE-2019041526 PROFESSIONAL ENGINEER
04-13-2022

FIRE ALARM CONTRACTOR:
SIG
SYSTEM INTEGRATION GROUP

PROJECT:
SIGNATURE AT PRYOR II
2100 AND 2150 NW LOWENSTEIN DR.
LEE'S SUMMIT, MISSOURI 64081

REVISIONS: DATE / DESCRIPTION
1
2
3
4
5

Copyright 2022 JSC Engineers

ISSUED:
PERMIT

SHEET TITLE:
BATTERY CALCULATIONS

DATE: 04.13.2022
JOB NO.: 22-094
SHEET:
FA309

7 6 5 4 3 2 1

E D C B A

SILENT KNIGHT

RPS-1000 Calculations
Version 02.24.09

Slot 1 Project Values

Project Name:	The Signature	Standby Hours:	24
Project ID:	BLDG 2-C	Alarm Mins:	5
Prepared By:	David Johnson	Derating Factor:	1.2
Date:	1/11/2022	Voltage Drop Warning Threshold %:	10

Panel ID: RPS-4
Location: IDF 116
Model: RPS-1000 Addressable Power Expand.
Volts: 24 VDC
Max NAC Current: 3.0 Amps
Max Panel Current: 6.0 Amps

Part.#	Description	Qty	Current Draw Standby	Current Draw Alarm	Wire AWG & Type	Ohms Per 1000 Ft.	Length(ft) One-Way	Actual Ohms	Volts @ EOL	%Drop
RPS-1000	Power Expander	1	0.040	0.160						
IDP	Photo, Photo-T		0.000	0.000						
IDP	Ion		0.000	0.000						
IDP	Heat, Heat-HT		0.000	0.000						
IDP	Beam, Beam-T		0.000	0.000						
IDP	Pduct (non relay)		0.000	0.000						
IDP	Pduct-R (with relay)		0.000	0.000						
IDP	Acclimate, ROR		0.000	0.000						
IDP	Control		0.000	0.000						
IDP	Control-6		0.000	0.000						
IDP	Monitor, Minimon		0.000	0.000						
IDP	Monitor-2		0.000	0.000						
IDP	Monitor-10		0.000	0.000						
IDP	Pull-SA, Pull-DA		0.000	0.000						
IDP	Relay		0.000	0.000						
IDP	Relay-6		0.000	0.000						
IDP	Zone, Zone-6		0.000	0.000						
IDP	Iso (Isolator Module)		0.000	0.000						
SSB224BI	Isolator Base		0.000	0.000						
SSB501BHT	Sounder Base		0.000	0.000						
SSB224RB	Relay Base		0.000	0.000						
RTS451	Magnetic Remote Test		0.000	0.000						
RTS451KEY	Key Activated Test		0.000	0.000						
RA400Z	Remote LED		0.000	0.000						
5815XL	SLC Expander		0.000	0.000						
RA-100	LCD Remote Annunc		0.000	0.000						
RA-1000	LCD Remote Annunc		0.000	0.000						
5824	Serial/Parallel Module		0.000	0.000						
5496	Power Expander		0.000	0.000						
RPS-1000	Power Expander		0.000	0.000						
5865-4	LED Annunciator (4G)		0.000	0.000						
5865-3	LED Annunciator (3G)		0.000	0.000						
5880	LED Driver Module		0.000	0.000						
5883	Relay Module		0.000	0.000						
VIP-VCM	Voice Control Module		0.000	0.000						
VIP-SW16	Switch Expander		0.000	0.000						
VIP-50	50 Amplifier		0.000	0.000						
VIP-RM	Remote Microphone		0.000	0.000						
PGM-I/O #1	NAC 19	cfg.	0.000	0.164	#14 Solid	2.52	150	0.76	20.28	0.61%
PGM-I/O #2	NAC 20	cfg.	0.000	0.255	#14 Solid	2.52	360	1.81	19.94	2.27%
PGM-I/O #3	NAC 21	cfg.	0.000	0.552	#14 Solid	2.52	170	0.86	19.93	2.32%
PGM-I/O #4	NAC 22	cfg.	0.000	0.552	#14 Solid	2.52	175	0.88	19.91	2.39%
PGM-I/O #5	NAC 23	cfg.	0.000	0.414	#14 Solid	2.52	215	1.08	19.95	2.20%
PGM-I/O #6	trigger, bdlg 1-A	cfg.	0.000	0.075	#14 Solid	2.52	150	0.76	20.34	0.28%
	Total Standby Current (Amps)		0.040	2.172	Total Alarm Current (Amps)					
	Standby Time In Hours		24	0.083	Alarm Time In Minutes / 60		(5 Mins)			
	Total Standby AH Required		0.960	0.181	Total Alarm AH Required					
	Total Combined AH Required		1.14							
	Multiply By The Derating Factor		1.20							
	Minimum Battery AmpHours Required		1.37							

NA

Command Shortcuts

Configure Circuits | Print Page

POTTER — The Symbol of Protection

PSN-64
Battery & Voltage Drop Calculations

Project Name: The Signature
Building 2
Installed By: System Integration Group
Designed By: David Johnson
Date: 1/11/2021
Standby Hours: 24
Alarm Mins: 5
Safety Margin: 20%
NAC Source Voltage: 20.4

Model #: PSN-64
Panel ID: RPS- 5
Location: IDF-116
Max Panel Current (amps): 6

User assumes all responsibility to ensure the quantities and current draw values in this worksheet are accurate prior to submittal.

Qty	Panel Part #	Description	Standby (amps) Each	Standby (amps) Total	Alarm (amps) Each	Alarm (amps) Total
1	PSN-64	NAC Power Expander	0.075	0.075	0.075	0.075
			Panel Standby:	0.075	Panel Alarm:	0.075

Ckt	NAC Circuits (See NAC Configuration below) Use	Description	Class	Standby (amps) Total	Alarm (amps) Total
1	Notification	NAC 24	Class B	0.00000	0.27600
2	Notification	NAC 25	Class B	0.00000	0.55200
3	Notification	NAC 26	Class B	0.00000	0.55200
4	Notification	NAC 27	Class B	0.00000	0.41400
AUX				0.00000	0.00000
			NAC Standby:	0.00000	NAC Alarm: 1.79400

Battery Calculation Summary

	Standby (amps)		Alarm (amps)
Panel Current:	0.07500		0.07500
NAC Circuit Current:	0.00000		1.79400
Total Standby:	0.075000	Total Alarm:	1.86900
Standby Hours:	24	Alarm Mins:	5
AH Required:	1.80	AH Required:	0.16
Total Combined Standby & Alarm AmpHours Required:			1.96
Safety Margin:			20%
Required Battery AmpHours:			2.35
Battery AmpHours Provided:			7

POTTER — The Symbol of Protection

NAC Circuit Configuration & Voltage Drop — *The Signature* — *1/11/2021*

NAC 1 — MAX Circuit Current (amps): 3 — Source Voltage Used (VDC): 20.4
Class: Class B — Usage: Notification — Description: NAC 24

Wire Type	Ohms/1000ft	Length 1-Way	Actual Ohms	Max Load (amps	Volts @ EOL	Min Volts Req'd
#14 Solid	3.19	140	0.893	0.276	20.15	16

Qty	Circuit Devices Lookup Type	Description	Standby (amps) Each	Standby (amps) Total	Alarm (amps) Each	Alarm (amps) Total
2	User Defined	S/S HLF	0.000000	0.000000	0.138000	0.276000
		User can add devices on the fly to these bottom 5 rows (No lookup function)				
			Total Standby:	0.00000	Total Alarm:	0.27600

NAC 2 — MAX Circuit Current (amps): 3 — Source Voltage Used (VDC): 20.4
Class: Class B — Usage: Notification — Description: NAC 25

Wire Type	Ohms/1000ft	Length 1-Way	Actual Ohms	Max Load (amps	Volts @ EOL	Min Volts Req'd
#14 Solid	3.19	160	1.021	0.552	19.84	16

Qty	Circuit Devices Lookup Type	Description	Standby (amps) Each	Standby (amps) Total	Alarm (amps) Each	Alarm (amps) Total
4	User Defined	S/S HLF	0.000000	0.000000	0.138000	0.552000
		User can add devices on the fly to these bottom 5 rows (No lookup function)				
			Total Standby:	0.00000	Total Alarm:	0.55200

POTTER — The Symbol of Protection

NAC Circuit Configuration & Voltage Drop (cont'd) — *The Signature* — *1/11/2021*

NAC 3 — MAX Circuit Current (amps): 3 — Source Voltage Used (VDC): 20.4
Class: Class B — Usage: Notification — Description: NAC 26

Wire Type	Ohms/1000ft	Length 1-Way	Actual Ohms	Max Load (amps	Volts @ EOL	Min Volts Req'd
#14 Solid	3.19	200	1.276	0.552	19.70	16

Qty	Circuit Devices Lookup Type	Description	Standby (amps) Each	Standby (amps) Total	Alarm (amps) Each	Alarm (amps) Total
4	User Defined	S/S HLF	0.000000	0.000000	0.138000	0.552000
		User can add devices on the fly to these bottom 5 rows (No lookup function)				
			Total Standby:	0.00000	Total Alarm:	0.55200

NAC 4 — MAX Circuit Current (amps): 3 — Source Voltage Used (VDC): 20.4
Class: Class B — Usage: Notification — Description: NAC 27

Wire Type	Ohms/1000ft	Length 1-Way	Actual Ohms	Max Load (amps	Volts @ EOL	Min Volts Req'd
#14 Solid	3.19	220	1.404	0.414	19.82	16

Qty	Circuit Devices Lookup Type	Description	Standby (amps) Each	Standby (amps) Total	Alarm (amps) Each	Alarm (amps) Total
3	User Defined	S/S HLF	0.000000	0.000000	0.138000	0.414000
		User can add devices on the fly to these bottom 5 rows (No lookup function)				
			Total Standby:	0.00000	Total Alarm:	0.41400

AUX Power — MAX Circuit Current (amps): 3 — Source Voltage Used (VDC): 20.4
Usage: — Description:

Wire Type	Ohms/1000ft	Length 1-Way	Actual Ohms	Max Load (amps	Volts @ Last Device	Min Volts Req'd
#12 Solid	2.01		0.000	0.000	20.40	16

Qty	Circuit Devices Lookup Type	Description	Standby (amps) Each	Standby (amps) Total	Alarm (amps) Each	Alarm (amps) Total
		User can add devices on the fly to these bottom 5 rows (No lookup function)				
			Total Standby:	0.00000	Total Alarm:	0.00000

POTTER — The Symbol of Protection

PSN-64
Battery & Voltage Drop Calculations

Project Name: The Signature
Building 2
Installed By: System Integration Group
Designed By: David Johnson
Date: 1/11/2021
Standby Hours: 24
Alarm Mins: 5
Safety Margin: 20%
NAC Source Voltage: 20.4

Model #: PSN-64
Panel ID: RPS- 6
Location: HVAC/ELEC 215
Max Panel Current (amps): 6

User assumes all responsibility to ensure the quantities and current draw values in this worksheet are accurate prior to submittal.

Qty	Panel Part #	Description	Standby (amps) Each	Standby (amps) Total	Alarm (amps) Each	Alarm (amps) Total
1	PSN-64	NAC Power Expander	0.075	0.075	0.075	0.075
			Panel Standby:	0.075	Panel Alarm:	0.075

Ckt	NAC Circuits (See NAC Configuration below) Use	Description	Class	Standby (amps) Total	Alarm (amps) Total
1	Notification	NAC 28	Class B	0.00000	0.21200
2	Notification	NAC 29	Class B	0.00000	0.55200
3	Notification	NAC 30	Class B	0.00000	0.55200
4	Notification	NAC 31	Class B	0.00000	0.41400
AUX				0.00000	0.00000
			NAC Standby:	0.00000	NAC Alarm: 1.73000

Battery Calculation Summary

	Standby (amps)		Alarm (amps)
Panel Current:	0.07500		0.07500
NAC Circuit Current:	0.00000		1.73000
Total Standby:	0.075000	Total Alarm:	1.80500
Standby Hours:	24	Alarm Mins:	5
AH Required:	1.80	AH Required:	0.16
Total Combined Standby & Alarm AmpHours Required:			1.96
Safety Margin:			20%
Required Battery AmpHours:			2.35
Battery AmpHours Provided:			7

POTTER — The Symbol of Protection

NAC Circuit Configuration & Voltage Drop — *The Signature* — *1/11/2021*

NAC 1 — MAX Circuit Current (amps): 3 — Source Voltage Used (VDC): 20.4
Class: Class B — Usage: Notification — Description: NAC 28

Wire Type	Ohms/1000ft	Length 1-Way	Actual Ohms	Max Load (amps	Volts @ EOL	Min Volts Req'd
#14 Solid	3.19	340	2.169	0.212	19.94	16

Qty	Circuit Devices Lookup Type	Description	Standby (amps) Each	Standby (amps) Total	Alarm (amps) Each	Alarm (amps) Total
4	User Defined	System Sensor P2L 15cd Temp High	0.000000	0.000000	0.053000	0.212000
		User can add devices on the fly to these bottom 5 rows (No lookup function)				
			Total Standby:	0.00000	Total Alarm:	0.21200

NAC 2 — MAX Circuit Current (amps): 3 — Source Voltage Used (VDC): 20.4
Class: Class B — Usage: Notification — Description: NAC 29

Wire Type	Ohms/1000ft	Length 1-Way	Actual Ohms	Max Load (amps	Volts @ EOL	Min Volts Req'd
#14 Solid	3.19	170	1.085	0.552	19.80	16

Qty	Circuit Devices Lookup Type	Description	Standby (amps) Each	Standby (amps) Total	Alarm (amps) Each	Alarm (amps) Total
4	User Defined	S/S HLF	0.000000	0.000000	0.138000	0.552000
		User can add devices on the fly to these bottom 5 rows (No lookup function)				
			Total Standby:	0.00000	Total Alarm:	0.55200

POTTER — The Symbol of Protection

NAC Circuit Configuration & Voltage Drop (cont'd) — *The Signature* — *1/11/2021*

NAC 3 — MAX Circuit Current (amps): 3 — Source Voltage Used (VDC): 20.4
Class: Class B — Usage: Notification — Description: NAC 30

Wire Type	Ohms/1000ft	Length 1-Way	Actual Ohms	Max Load (amps	Volts @ EOL	Min Volts Req'd
#14 Solid	3.19	175	1.117	0.552	19.78	16

Qty	Circuit Devices Lookup Type	Description	Standby (amps) Each	Standby (amps) Total	Alarm (amps) Each	Alarm (amps) Total
4	User Defined	S/S HLF	0.000000	0.000000	0.138000	0.552000
		User can add devices on the fly to these bottom 5 rows (No lookup function)				
			Total Standby:	0.00000	Total Alarm:	0.55200

NAC 4 — MAX Circuit Current (amps): 3 — Source Voltage Used (VDC): 20.4
Class: Class B — Usage: Notification — Description: NAC 31

Wire Type	Ohms/1000ft	Length 1-Way	Actual Ohms	Max Load (amps	Volts @ EOL	Min Volts Req'd
#14 Solid	3.19	215	1.372	0.414	19.83	16

Qty	Circuit Devices Lookup Type	Description	Standby (amps) Each	Standby (amps) Total	Alarm (amps) Each	Alarm (amps) Total
3	User Defined	S/S HLF	0.000000	0.000000	0.138000	0.414000
		User can add devices on the fly to these bottom 5 rows (No lookup function)				
			Total Standby:	0.00000	Total Alarm:	0.41400

AUX Power — MAX Circuit Current (amps): 3 — Source Voltage Used (VDC): 20.4
Usage: — Description:

Wire Type	Ohms/1000ft	Length 1-Way	Actual Ohms	Max Load (amps	Volts @ Last Device	Min Volts Req'd
#12 Solid	2.01		0.000	0.000	20.40	16

Qty	Circuit Devices Lookup Type	Description	Standby (amps) Each	Standby (amps) Total	Alarm (amps) Each	Alarm (amps) Total
		User can add devices on the fly to these bottom 5 rows (No lookup function)				
			Total Standby:	0.00000	Total Alarm:	0.00000

JSC ENGINEERS
MO COA NO. 2012006786 / KS COA NO. E-2818
1925 CENTRAL ST. SUITE #201
KANSAS CITY, MO 64108
phone: (816) 272-5289
email: jsmothers@jscengineers.com

STATE OF MISSOURI — JESSEY P. BORRIS — NUMBER PE-2019041526 — PROFESSIONAL ENGINEER
04-13-2022

FIRE ALARM CONTRACTOR:
SIG
SYSTEM INTEGRATION GROUP

PROJECT:
SIGNATURE AT PRYOR II
2100 AND 2150 NW LOWENSTEIN DR.
LEE'S SUMMIT, MISSOURI 64081

REVISIONS: DATE / DESCRIPTION
1
2
3
4
5

Copyright 2022 JSC Engineers

ISSUED:
PERMIT

SHEET TITLE:
BATTERY CALCULATIONS

DATE: 04.13.2022
JOB NO.: 22-094
SHEET:
FA310

BATTERY CALCS - BLDG 2 (CONT.)

1

SCALE : N/A

POTTER — The Symbol of Protection

PSN-64
Battery & Voltage Drop
Calculations

Project Name:	The Signature	Standby Hours:	24
	Building 2	Alarm Mins:	5
Installed By:	System Integration Group	Safety Margin:	20%
Designed By:	David Johnson		
Date:	1/11/2021	NAC Source Voltage:	20.4

Model #: PSN-64
Panel ID: RPS- 7
Location: HVAC/ELEC 215
Max Panel Current (amps): 6

User assumes all responsibility to ensure the quantities and current draw values in this worksheet are accurate prior to submittal.

Panel Qty	Part #	Description	Standby (amps) Each	Standby (amps) Total	Alarm (amps) Each	Alarm (amps) Total
1	PSN-64	NAC Power Expander	0.075	0.075	0.075	0.075
			Panel Standby:	0.075	Panel Alarm:	0.075

NAC Circuits (See NAC Configuration below) Ckt	Use	Description	Class	Standby (amps) Total	Alarm (amps) Total
1	Notification	NAC 32	Class B	0.00000	0.10600
2	Notification	NAC 33	Class B	0.00000	0.55200
3	Notification	NAC 34	Class B	0.00000	0.55200
4	Notification	NAC 35	Class B	0.00000	0.41400
AUX				0.00000	0.00000
			NAC Standby:	0.00000	NAC Alarm: 1.62400

Battery Calculation Summary	Standby (amps)		Alarm (amps)
Panel Current:	0.07500		0.07500
NAC Circuit Current:	0.00000		1.62400
Total Standby:	0.075000	Total Alarm:	1.69900
Standby Hours:	24	Alarm Mins:	5
AH Required:	1.80	AH Required:	0.15
Total Combined Standby & Alarm AmpHours Required:			1.95
		Safety Margin:	20%
		Required Battery AmpHours:	2.34
		Battery AmpHours Provided:	7

POTTER — The Symbol of Protection

NAC Circuit Configuration & Voltage Drop *The Signature* *1/11/2021*

NAC 1 MAX Circuit Current (amps): 3 Source Voltage Used (VDC): 20.4
Class: Class B Usage: Notification Description: NAC 32

Wire Type	Ohms/1000ft	Length 1-Way	Actual Ohms	Max Load (amps	Volts @ EOL	Min Volts Req'd
#14 Solid	3.19	140	0.893	0.106	20.31	16

Circuit Devices Qty	Lookup Type	Description	Standby (amps) Each	Standby (amps) Total	Alarm (amps) Each	Alarm (amps) Total
2	User Defined	System Sensor P2L 15cd Temp High	0.000000	0.000000	0.053000	0.106000
		User can add devices on the fly				
		to these bottom 5 rows				
		(No lookup function)				
			Total Standby:	0.00000	Total Alarm:	0.10600

NAC 2 MAX Circuit Current (amps): 3 Source Voltage Used (VDC): 20.4
Class: Class B Usage: Notification Description: NAC 33

Wire Type	Ohms/1000ft	Length 1-Way	Actual Ohms	Max Load (amps	Volts @ EOL	Min Volts Req'd
#14 Solid	3.19	160	1.021	0.552	19.84	16

Circuit Devices Qty	Lookup Type	Description	Standby (amps) Each	Standby (amps) Total	Alarm (amps) Each	Alarm (amps) Total
4	User Defined	S/S HLF	0.000000	0.000000	0.138000	0.552000
		User can add devices on the fly				
		to these bottom 5 rows				
		(No lookup function)				
			Total Standby:	0.00000	Total Alarm:	0.55200

POTTER — The Symbol of Protection

NAC Circuit Configuration & Voltage Drop (cont'd) *The Signature* *1/11/2021*

NAC 3 MAX Circuit Current (amps): 3 Source Voltage Used (VDC): 20.4
Class: Class B Usage: Notification Description: NAC 34

Wire Type	Ohms/1000ft	Length 1-Way	Actual Ohms	Max Load (amps	Volts @ EOL	Min Volts Req'd
#14 Solid	3.19	200	1.276	0.552	19.70	16

Circuit Devices Qty	Lookup Type	Description	Standby (amps) Each	Standby (amps) Total	Alarm (amps) Each	Alarm (amps) Total
4	User Defined	S/S HLF	0.000000	0.000000	0.138000	0.552000
		User can add devices on the fly				
		to these bottom 5 rows				
		(No lookup function)				
			Total Standby:	0.00000	Total Alarm:	0.55200

NAC 4 MAX Circuit Current (amps): 3 Source Voltage Used (VDC): 20.4
Class: Class B Usage: Notification Description: NAC 35

Wire Type	Ohms/1000ft	Length 1-Way	Actual Ohms	Max Load (amps	Volts @ EOL	Min Volts Req'd
#14 Solid	3.19	250	1.595	0.414	19.74	16

Circuit Devices Qty	Lookup Type	Description	Standby (amps) Each	Standby (amps) Total	Alarm (amps) Each	Alarm (amps) Total
3	User Defined	S/S HLF	0.000000	0.000000	0.138000	0.414000
		User can add devices on the fly				
		to these bottom 5 rows				
		(No lookup function)				
			Total Standby:	0.00000	Total Alarm:	0.41400

AUX Power MAX Circuit Current (amps): 3 Source Voltage Used (VDC): 20.4
Usage: Description:

Wire Type	Ohms/1000ft	Length 1-Way	Actual Ohms	Max Load (amps	Volts @ Last Device	Min Volts Req'd
#12 Solid	2.01		0.000	0.000	20.40	16

Circuit Devices Qty	Lookup Type	Description	Standby (amps) Each	Standby (amps) Total	Alarm (amps) Each	Alarm (amps) Total
		User can add devices on the fly				
		to these bottom 5 rows				
		(No lookup function)				
			Total Standby:	0.00000	Total Alarm:	0.00000

POTTER — The Symbol of Protection

PSN-64
Battery & Voltage Drop
Calculations

Project Name:	The Signature	Standby Hours:	24
	Building 2	Alarm Mins:	5
Installed By:	System Integration Group	Safety Margin:	20%
Designed By:	David Johnson		
Date:	1/11/2021	NAC Source Voltage:	20.4

Model #: PSN-64
Panel ID: RPS- 8
Location: HVAC/ELEC 315
Max Panel Current (amps): 6

User assumes all responsibility to ensure the quantities and current draw values in this worksheet are accurate prior to submittal.

Panel Qty	Part #	Description	Standby (amps) Each	Standby (amps) Total	Alarm (amps) Each	Alarm (amps) Total
1	PSN-64	NAC Power Expander	0.075	0.075	0.075	0.075
			Panel Standby:	0.075	Panel Alarm:	0.075

NAC Circuits (See NAC Configuration below) Ckt	Use	Description	Class	Standby (amps) Total	Alarm (amps) Total
1	Notification	NAC 36	Class B	0.00000	0.21200
2	Notification	NAC 37	Class B	0.00000	0.55200
3	Notification	NAC 38	Class B	0.00000	0.55200
4	Notification	NAC 39	Class B	0.00000	0.41400
AUX				0.00000	0.00000
			NAC Standby:	0.00000	NAC Alarm: 1.73000

Battery Calculation Summary	Standby (amps)		Alarm (amps)
Panel Current:	0.07500		0.07500
NAC Circuit Current:	0.00000		1.73000
Total Standby:	0.075000	Total Alarm:	1.80500
Standby Hours:	24	Alarm Mins:	5
AH Required:	1.80	AH Required:	0.16
Total Combined Standby & Alarm AmpHours Required:			1.96
		Safety Margin:	20%
		Required Battery AmpHours:	2.35
		Battery AmpHours Provided:	7

POTTER — The Symbol of Protection

NAC Circuit Configuration & Voltage Drop *The Signature* *1/11/2021*

NAC 1 MAX Circuit Current (amps): 3 Source Voltage Used (VDC): 20.4
Class: Class B Usage: Notification Description: NAC 36

Wire Type	Ohms/1000ft	Length 1-Way	Actual Ohms	Max Load (amps	Volts @ EOL	Min Volts Req'd
#14 Solid	3.19	340	2.169	0.212	19.94	16

Circuit Devices Qty	Lookup Type	Description	Standby (amps) Each	Standby (amps) Total	Alarm (amps) Each	Alarm (amps) Total
4	User Defined	System Sensor P2L 15cd Temp High	0.000000	0.000000	0.053000	0.212000
		User can add devices on the fly				
		to these bottom 5 rows				
		(No lookup function)				
			Total Standby:	0.00000	Total Alarm:	0.21200

NAC 2 MAX Circuit Current (amps): 3 Source Voltage Used (VDC): 20.4
Class: Class B Usage: Notification Description: NAC 37

Wire Type	Ohms/1000ft	Length 1-Way	Actual Ohms	Max Load (amps	Volts @ EOL	Min Volts Req'd
#14 Solid	3.19	170	1.085	0.552	19.80	16

Circuit Devices Qty	Lookup Type	Description	Standby (amps) Each	Standby (amps) Total	Alarm (amps) Each	Alarm (amps) Total
4	User Defined	S/S HLF	0.000000	0.000000	0.138000	0.552000
		User can add devices on the fly				
		to these bottom 5 rows				
		(No lookup function)				
			Total Standby:	0.00000	Total Alarm:	0.55200

POTTER — The Symbol of Protection

NAC Circuit Configuration & Voltage Drop (cont'd) *The Signature* *1/11/2021*

NAC 3 MAX Circuit Current (amps): 3 Source Voltage Used (VDC): 20.4
Class: Class B Usage: Notification Description: NAC 38

Wire Type	Ohms/1000ft	Length 1-Way	Actual Ohms	Max Load (amps	Volts @ EOL	Min Volts Req'd
#14 Solid	3.19	175	1.117	0.552	19.78	16

Circuit Devices Qty	Lookup Type	Description	Standby (amps) Each	Standby (amps) Total	Alarm (amps) Each	Alarm (amps) Total
4	User Defined	S/S HLF	0.000000	0.000000	0.138000	0.552000
		User can add devices on the fly				
		to these bottom 5 rows				
		(No lookup function)				
			Total Standby:	0.00000	Total Alarm:	0.55200

NAC 4 MAX Circuit Current (amps): 3 Source Voltage Used (VDC): 20.4
Class: Class B Usage: Notification Description: NAC 39

Wire Type	Ohms/1000ft	Length 1-Way	Actual Ohms	Max Load (amps	Volts @ EOL	Min Volts Req'd
#14 Solid	3.19	215	1.372	0.414	19.83	16

Circuit Devices Qty	Lookup Type	Description	Standby (amps) Each	Standby (amps) Total	Alarm (amps) Each	Alarm (amps) Total
3	User Defined	S/S HLF	0.000000	0.000000	0.138000	0.414000
		User can add devices on the fly				
		to these bottom 5 rows				
		(No lookup function)				
			Total Standby:	0.00000	Total Alarm:	0.41400

AUX Power MAX Circuit Current (amps): 3 Source Voltage Used (VDC): 20.4
Usage: Description:

Wire Type	Ohms/1000ft	Length 1-Way	Actual Ohms	Max Load (amps	Volts @ Last Device	Min Volts Req'd
#12 Solid	2.01		0.000	0.000	20.40	16

Circuit Devices Qty	Lookup Type	Description	Standby (amps) Each	Standby (amps) Total	Alarm (amps) Each	Alarm (amps) Total
		User can add devices on the fly				
		to these bottom 5 rows				
		(No lookup function)				
			Total Standby:	0.00000	Total Alarm:	0.00000

BATTERY CALCS - BLDG 2 (CONT.)

SCALE : N/A

1

JSC ENGINEERS
MO COA NO. 2012006786 / KS COA NO. E-2818
1925 CENTRAL ST. SUITE #201
KANSAS CITY, MO 64108
phone: (816) 272-5289
email: jsmothers@jscengineers.com

STATE OF MISSOURI — JESSE P. BORRIS — NUMBER PE-2019041526 — PROFESSIONAL ENGINEER
04-13-2022

FIRE ALARM CONTRACTOR:
SIG
SYSTEM INTEGRATION GROUP

PROJECT:
SIGNATURE AT PRYOR II
2100 AND 2150 NW LOWENSTEIN DR.
LEE'S SUMMIT, MISSOURI 64081

REVISIONS: DATE / DESCRIPTION
1
2
3
4
5

Copyright 2022
JSC Engineers

ISSUED:
PERMIT

SHEET TITLE:
BATTERY CALCULATIONS

DATE: 04.13.2022
JOB NO.: 22-094
SHEET:
FA311

POTTER — The Symbol of Protection

PSN-64
Battery & Voltage Drop
Calculations

Project Name:	The Signature	Standby Hours:	24
	Building 2	Alarm Mins:	5
Installed By:	System Integration Group	Safety Margin:	20%
Designed By:	David Johnson		
Date:	1/11/2021	NAC Source Voltage:	20.4

Model #: PSN-64 — Max Panel Current (amps): 6
Panel ID: RPS- 9
Location: HVAC/ELEC 315

User assumes all responsibility to ensure the quantities and current draw values in this worksheet are accurate prior to submittal.

Qty	Panel Part #	Description	Standby (amps) Each	Standby (amps) Total	Alarm (amps) Each	Alarm (amps) Total
1	PSN-64	NAC Power Expander	0.075	0.075	0.075	0.075
			Panel Standby:	0.075	Panel Alarm:	0.075

NAC Circuits (See NAC Configuration below) Ckt	Use	Description	Class	Standby (amps) Total	Alarm (amps) Total
1	Notification	NAC 40	Class B	0.00000	0.13800
2	Notification	NAC 41	Class B	0.00000	0.55200
3	Notification	NAC 42	Class B	0.00000	0.55200
4	Notification	NAC 43	Class B	0.00000	0.41400
AUX				0.00000	0.00000
			NAC Standby:	0.00000	NAC Alarm: 1.65600

Battery Calculation Summary

	Standby (amps)		Alarm (amps)
Panel Current:	0.07500		0.07500
NAC Circuit Current:	0.00000		1.65600
Total Standby:	0.075000	Total Alarm:	1.73100
Standby Hours:	24	Alarm Mins:	5
AH Required:	1.80	AH Required:	0.15
Total Combined Standby & Alarm AmpHours Required:			1.95
Safety Margin:			20%
Required Battery AmpHours:			2.34
Battery AmpHours Provided:			7

POTTER — The Symbol of Protection

NAC Circuit Configuration & Voltage Drop *The Signature* *1/11/2021*

NAC 1 — MAX Circuit Current (amps): 3 — Source Voltage Used (VDC): 20.4
Class: Class B — Usage: Notification — Description: NAC 40

Wire Type	Ohms/1000ft	Length 1-Way	Actual Ohms	Max Load (amps	Volts @ EOL	Min Volts Req'd
#14 Solid	3.19	140	0.893	0.138	20.28	16

Qty	Circuit Devices Lookup Type	Description	Standby (amps) Each	Standby (amps) Total	Alarm (amps) Each	Alarm (amps) Total
1	User Defined	S/S HLF	0.000000	0.000000	0.138000	0.138000
		User can add devices on the fly to these bottom 5 rows (No lookup function)				
			Total Standby:	0.00000	Total Alarm:	0.13800

NAC 2 — MAX Circuit Current (amps): 3 — Source Voltage Used (VDC): 20.4
Class: Class B — Usage: Notification — Description: NAC 41

Wire Type	Ohms/1000ft	Length 1-Way	Actual Ohms	Max Load (amps	Volts @ EOL	Min Volts Req'd
#14 Solid	3.19	160	1.021	0.552	19.84	16

Qty	Circuit Devices Lookup Type	Description	Standby (amps) Each	Standby (amps) Total	Alarm (amps) Each	Alarm (amps) Total
4	User Defined	S/S HLF	0.000000	0.000000	0.138000	0.552000
		User can add devices on the fly to these bottom 5 rows (No lookup function)				
			Total Standby:	0.00000	Total Alarm:	0.55200

POTTER — The Symbol of Protection

NAC Circuit Configuration & Voltage Drop (cont'd) *The Signature* *1/11/2021*

NAC 3 — MAX Circuit Current (amps): 3 — Source Voltage Used (VDC): 20.4
Class: Class B — Usage: Notification — Description: NAC 42

Wire Type	Ohms/1000ft	Length 1-Way	Actual Ohms	Max Load (amps	Volts @ EOL	Min Volts Req'd
#14 Solid	3.19	200	1.276	0.552	19.70	16

Qty	Circuit Devices Lookup Type	Description	Standby (amps) Each	Standby (amps) Total	Alarm (amps) Each	Alarm (amps) Total
4	User Defined	S/S HLF	0.000000	0.000000	0.138000	0.552000
		User can add devices on the fly to these bottom 5 rows (No lookup function)				
			Total Standby:	0.00000	Total Alarm:	0.55200

NAC 4 — MAX Circuit Current (amps): 3 — Source Voltage Used (VDC): 20.4
Class: Class B — Usage: Notification — Description: NAC 43

Wire Type	Ohms/1000ft	Length 1-Way	Actual Ohms	Max Load (amps	Volts @ EOL	Min Volts Req'd
#14 Solid	3.19	215	1.372	0.414	19.83	16

Qty	Circuit Devices Lookup Type	Description	Standby (amps) Each	Standby (amps) Total	Alarm (amps) Each	Alarm (amps) Total
3	User Defined	S/S HLF	0.000000	0.000000	0.138000	0.414000
		User can add devices on the fly to these bottom 5 rows (No lookup function)				
			Total Standby:	0.00000	Total Alarm:	0.41400

AUX Power — MAX Circuit Current (amps): 3 — Source Voltage Used (VDC): 20.4
Usage: — Description:

Wire Type	Ohms/1000ft	Length 1-Way	Actual Ohms	Max Load (amps	Volts @ Last Device	Min Volts Req'd
#12 Solid	2.01		0.000	0.000	20.40	16

Qty	Circuit Devices Lookup Type	Description	Standby (amps) Each	Standby (amps) Total	Alarm (amps) Each	Alarm (amps) Total
		User can add devices on the fly to these bottom 5 rows (No lookup function)				
			Total Standby:	0.00000	Total Alarm:	0.00000

SILENT KNIGHT
RPS-1000 Calculations
Version 02.24.09

Global Project Values

Project Name:	The Signature	Standby Hours:	24
Project ID:	BLDG 2-A	Alarm Mins:	5
Prepared By:	David Johnson	Derating Factor:	1.2
Date:	1/11/2022	Voltage Drop Warning Threshold %:	10

Panel ID: RPS-10 — Model: RPS-1000 Addressable Power Expand. — Max NAC Current: 3.0 Amps
Location: IDF 102 — Volts: 24 VDC — Max Panel Current: 6.0 Amps

Part.#	Description	Qty	Current Draw Standby	Current Draw Alarm	Wire AWG & Type	Ohms Per 1000 Ft.	Length(ft) One-Way	Actual Ohms	Volts @ EOL	%Drop
RPS-1000	Power Expander	1	0.040	0.160						
IDP	Photo, Photo-T		0.000	0.000						
IDP	Ion		0.000	0.000						
IDP	Heat, Heat-HT		0.000	0.000						
IDP	Beam, Beam-T		0.000	0.000						
IDP	Pduct (non relay)		0.000	0.000						
IDP	Pduct-R (with relay)		0.000	0.000						
IDP	Acclimate, ROR		0.000	0.000						
IDP	Control		0.000	0.000						
IDP	Control-6		0.000	0.000						
IDP	Monitor, Minimon		0.000	0.000						
IDP	Monitor-2		0.000	0.000						
IDP	Monitor-10		0.000	0.000						
IDP	Pull-SA, Pull-DA		0.000	0.000						
IDP	Relay		0.000	0.000						
IDP	Relay-6		0.000	0.000						
IDP	Zone, Zone-6		0.000	0.000						
IDP	Iso (Isolator Module)		0.000	0.000						
SSB224BI	Isolator Base		0.000	0.000						
SSB501BHT	Sounder Base		0.000	0.000						
SSB224RB	Relay Base		0.000	0.000						
RTS451	Magnetic Remote Test		0.000	0.000						
RTS451KEY	Key Activated Test		0.000	0.000						
RA400Z	Remote LED		0.000	0.000						
5815XL	SLC Expander		0.000	0.000						
RA-100	LCD Remote Annunc		0.000	0.000						
RA-1000	LCD Remote Annunc		0.000	0.000						
5824	Serial/Parallel Module		0.000	0.000						
5496	Power Expander		0.000	0.000						
RPS-1000	Power Expander		0.000	0.000						
5865-4	LED Annunciator (4G)		0.000	0.000						
5865-3	LED Annunciator (3G)		0.000	0.000						
5880	LED Driver Module		0.000	0.000						
5883	Relay Module		0.000	0.000						
VIP-VCM	Voice Control Module		0.000	0.000						
VIP-SW16	Switch Expander		0.000	0.000						
VIP-50	50 Amplifier		0.000	0.000						
VIP-RM	Remote Microphone		0.000	0.000						
PGM-I/O #1	NAC 44	cfg	0.000	0.414	#14 Solid	2.52	80	0.40	20.23	0.82%
PGM-I/O #2	NAC 45	cfg	0.000	0.552	#14 Solid	2.52	225	1.13	19.77	3.07%
PGM-I/O #3	NAC 46	cfg	0.000	0.414	#14 Solid	2.52	120	0.60	20.15	1.23%
PGM-I/O #4	NAC 47	cfg	0.000	0.414	#14 Solid	2.52	160	0.81	20.07	1.64%
PGM-I/O #5	NAC 48	cfg	0.000	0.414	#14 Solid	2.52	190	0.96	20.00	1.94%
PGM-I/O #6	trigger, bdlg 1-A	cfg	0.000	0.030	#14 Solid	2.52	150	0.76	20.38	0.11%

Total Standby Current (Amps)	0.040	2.398	Total Alarm Current (Amps)
Standby Time In Hours	24	0.083	Alarm Time In Minutes / 60 (5 Mins)
Total Standby AH Required	0.960	0.200	Total Alarm AH Required
Total Combined AH Required	1.16		
Multiply By The Derating Factor	1.20		
Minimum Battery AmpHours Required	**1.39**		

Command Shortcuts

Configure Circuits | Print Page

BATTERY CALCS - BLDG 2 (CONT.)

1

SCALE : N/A

JSC ENGINEERS
MO COA NO. 2012006786 / KS COA NO. E-2818
1925 CENTRAL ST. SUITE #201
KANSAS CITY, MO 64108
phone: (816) 272-5289
email: jsmothers@jscengineers.com

STATE OF MISSOURI — JESSEY P. BORRIS — NUMBER PE-2019041526 — PROFESSIONAL ENGINEER
04-13-2022

FIRE ALARM CONTRACTOR:
SIG
SYSTEM INTEGRATION GROUP

PROJECT:
SIGNATURE AT PRYOR II
2100 AND 2150 NW LOWENSTEIN DR.
LEE'S SUMMIT, MISSOURI 64081

REVISIONS: DATE / DESCRIPTION
1
2
3
4
5

Copyright 2022 JSC Engineers

ISSUED:
PERMIT

SHEET TITLE:
BATTERY CALCULATIONS

DATE: 04.13.2022
JOB NO.: 22-094
SHEET:
FA312

7 6 5 4 3 2 1

E D C B A

POTTER — The Symbol of Protection

PSN-64
Battery & Voltage Drop
Calculations

Project Name:	The Signature	Standby Hours:	24
	Building 2	Alarm Mins:	5
Installed By:	System Integration Group	Safety Margin:	20%
Designed By:	David Johnson		
Date:	1/11/2021	NAC Source Voltage:	20.4

Model #: PSN-64
Panel ID: RPS- 11
Location: HVAC/ELEC 208
Max Panel Current (amps): 6

User assumes all responsibility to ensure the quantities and current draw values in this worksheet are accurate prior to submittal.

Qty	Panel Part #	Description	Standby (amps) Each	Standby (amps) Total	Alarm (amps) Each	Alarm (amps) Total
1	PSN-64	NAC Power Expander	0.075	0.075	0.075	0.075
			Panel Standby:	0.075	Panel Alarm:	0.075

Ckt	NAC Circuits (See NAC Configuration below) Use	Description	Class	Standby (amps) Total	Alarm (amps) Total
1	Notification	NAC 49	Class B	0.00000	0.41400
2	Notification	NAC 50	Class B	0.00000	0.55200
3	Notification	NAC 51	Class B	0.00000	0.41400
4	Notification	NAC 52	Class B	0.00000	0.41400
AUX	NAC 53	NAC 53		0.00000	0.41400
			NAC Standby:	0.00000	NAC Alarm: 2.20800

Battery Calculation Summary

	Standby (amps)		Alarm (amps)
Panel Current:	0.07500		0.07500
NAC Circuit Current:	0.00000		2.20800
Total Standby:	0.075000	Total Alarm:	2.28300
Standby Hours:	24	Alarm Mins:	5
AH Required:	1.80	AH Required:	0.20
Total Combined Standby & Alarm AmpHours Required:			2.00
Safety Margin:			20%
Required Battery AmpHours:			2.40
Battery AmpHours Provided:			7

POTTER — The Symbol of Protection

NAC Circuit Configuration & Voltage Drop *The Signature* *1/11/2021*

NAC 1 MAX Circuit Current (amps): 3 Source Voltage Used (VDC): 20.4
Class: Class B Usage: Notification Description: NAC 49

Wire Type	Ohms/1000ft	Length 1-Way	Actual Ohms	Max Load (amps	Volts @ EOL	Min Volts Req'd
#14 Solid	3.19	80	0.510	0.414	20.19	16

Qty	Circuit Devices Lookup Type	Description	Standby (amps) Each	Standby (amps) Total	Alarm (amps) Each	Alarm (amps) Total
3	User Defined	S/S HLF	0.000000	0.000000	0.138000	0.414000
		User can add devices on the fly				
		to these bottom 5 rows				
		(No lookup function)				
			Total Standby:	0.00000	Total Alarm:	0.41400

NAC 2 MAX Circuit Current (amps): 3 Source Voltage Used (VDC): 20.4
Class: Class B Usage: Notification Description: NAC 50

Wire Type	Ohms/1000ft	Length 1-Way	Actual Ohms	Max Load (amps	Volts @ EOL	Min Volts Req'd
#14 Solid	3.19	225	1.436	0.552	19.61	16

Qty	Circuit Devices Lookup Type	Description	Standby (amps) Each	Standby (amps) Total	Alarm (amps) Each	Alarm (amps) Total
4	User Defined	S/S HLF	0.000000	0.000000	0.138000	0.552000
		User can add devices on the fly				
		to these bottom 5 rows				
		(No lookup function)				
			Total Standby:	0.00000	Total Alarm:	0.55200

POTTER — The Symbol of Protection

NAC Circuit Configuration & Voltage Drop (cont'd) *The Signature* *1/11/2021*

NAC 3 MAX Circuit Current (amps): 3 Source Voltage Used (VDC): 20.4
Class: Class B Usage: Notification Description: NAC 51

Wire Type	Ohms/1000ft	Length 1-Way	Actual Ohms	Max Load (amps	Volts @ EOL	Min Volts Req'd
#14 Solid	3.19	120	0.766	0.414	20.08	16

Qty	Circuit Devices Lookup Type	Description	Standby (amps) Each	Standby (amps) Total	Alarm (amps) Each	Alarm (amps) Total
3	User Defined	S/S HLF	0.000000	0.000000	0.138000	0.414000
		User can add devices on the fly				
		to these bottom 5 rows				
		(No lookup function)				
			Total Standby:	0.00000	Total Alarm:	0.41400

NAC 4 MAX Circuit Current (amps): 3 Source Voltage Used (VDC): 20.4
Class: Class B Usage: Notification Description: NAC 52

Wire Type	Ohms/1000ft	Length 1-Way	Actual Ohms	Max Load (amps	Volts @ EOL	Min Volts Req'd
#14 Solid	3.19	160	1.021	0.414	19.98	16

Qty	Circuit Devices Lookup Type	Description	Standby (amps) Each	Standby (amps) Total	Alarm (amps) Each	Alarm (amps) Total
3	User Defined	S/S HLF	0.000000	0.000000	0.138000	0.414000
		User can add devices on the fly				
		to these bottom 5 rows				
		(No lookup function)				
			Total Standby:	0.00000	Total Alarm:	0.41400

AUX Power MAX Circuit Current (amps): 3 Source Voltage Used (VDC): 20.4
Usage: Notification Description: NAC 53

Wire Type	Ohms/1000ft	Length 1-Way	Actual Ohms	Max Load (amps	Volts @ Last Device	Min Volts Req'd
#14 Solid	3.19	190	1.212	0.414	19.90	16

Qty	Circuit Devices Lookup Type	Description	Standby (amps) Each	Standby (amps) Total	Alarm (amps) Each	Alarm (amps) Total
3	User Defined	S/S HLF	0.000000	0.000000	0.138000	0.414000
		User can add devices on the fly				
		to these bottom 5 rows				
		(No lookup function)				
			Total Standby:	0.00000	Total Alarm:	0.41400

POTTER — The Symbol of Protection

PSN-64
Battery & Voltage Drop
Calculations

Project Name:	The Signature	Standby Hours:	24
	Building 2	Alarm Mins:	5
Installed By:	System Integration Group	Safety Margin:	20%
Designed By:	David Johnson		
Date:	1/11/2021	NAC Source Voltage:	20.4

Model #: PSN-64
Panel ID: RPS- 12
Location: HVAC/ELEC 308
Max Panel Current (amps): 6

User assumes all responsibility to ensure the quantities and current draw values in this worksheet are accurate prior to submittal.

Qty	Panel Part #	Description	Standby (amps) Each	Standby (amps) Total	Alarm (amps) Each	Alarm (amps) Total
1	PSN-64	NAC Power Expander	0.075	0.075	0.075	0.075
			Panel Standby:	0.075	Panel Alarm:	0.075

Ckt	NAC Circuits (See NAC Configuration below) Use	Description	Class	Standby (amps) Total	Alarm (amps) Total
1	Notification	NAC 54	Class B	0.00000	0.41400
2	Notification	NAC 55	Class B	0.00000	0.55200
3	Notification	NAC 56	Class B	0.00000	0.41400
4	Notification	NAC 57	Class B	0.00000	0.41400
AUX	NAC 58	NAC 58		0.00000	0.41400
			NAC Standby:	0.00000	NAC Alarm: 2.20800

Battery Calculation Summary

	Standby (amps)		Alarm (amps)
Panel Current:	0.07500		0.07500
NAC Circuit Current:	0.00000		2.20800
Total Standby:	0.075000	Total Alarm:	2.28300
Standby Hours:	24	Alarm Mins:	5
AH Required:	1.80	AH Required:	0.20
Total Combined Standby & Alarm AmpHours Required:			2.00
Safety Margin:			20%
Required Battery AmpHours:			2.40
Battery AmpHours Provided:			7

POTTER — The Symbol of Protection

NAC Circuit Configuration & Voltage Drop *The Signature* *1/11/2021*

NAC 1 MAX Circuit Current (amps): 3 Source Voltage Used (VDC): 20.4
Class: Class B Usage: Notification Description: NAC 54

Wire Type	Ohms/1000ft	Length 1-Way	Actual Ohms	Max Load (amps	Volts @ EOL	Min Volts Req'd
#14 Solid	3.19	80	0.510	0.414	20.19	16

Qty	Circuit Devices Lookup Type	Description	Standby (amps) Each	Standby (amps) Total	Alarm (amps) Each	Alarm (amps) Total
3	User Defined	S/S HLF	0.000000	0.000000	0.138000	0.414000
		User can add devices on the fly				
		to these bottom 5 rows				
		(No lookup function)				
			Total Standby:	0.00000	Total Alarm:	0.41400

NAC 2 MAX Circuit Current (amps): 3 Source Voltage Used (VDC): 20.4
Class: Class B Usage: Notification Description: NAC 55

Wire Type	Ohms/1000ft	Length 1-Way	Actual Ohms	Max Load (amps	Volts @ EOL	Min Volts Req'd
#14 Solid	3.19	225	1.436	0.552	19.61	16

Qty	Circuit Devices Lookup Type	Description	Standby (amps) Each	Standby (amps) Total	Alarm (amps) Each	Alarm (amps) Total
4	User Defined	S/S HLF	0.000000	0.000000	0.138000	0.552000
		User can add devices on the fly				
		to these bottom 5 rows				
		(No lookup function)				
			Total Standby:	0.00000	Total Alarm:	0.55200

POTTER — The Symbol of Protection

NAC Circuit Configuration & Voltage Drop (cont'd) *The Signature* *1/11/2021*

NAC 3 MAX Circuit Current (amps): 3 Source Voltage Used (VDC): 20.4
Class: Class B Usage: Notification Description: NAC 56

Wire Type	Ohms/1000ft	Length 1-Way	Actual Ohms	Max Load (amps	Volts @ EOL	Min Volts Req'd
#14 Solid	3.19	120	0.766	0.414	20.08	16

Qty	Circuit Devices Lookup Type	Description	Standby (amps) Each	Standby (amps) Total	Alarm (amps) Each	Alarm (amps) Total
3	User Defined	S/S HLF	0.000000	0.000000	0.138000	0.414000
		User can add devices on the fly				
		to these bottom 5 rows				
		(No lookup function)				
			Total Standby:	0.00000	Total Alarm:	0.41400

NAC 4 MAX Circuit Current (amps): 3 Source Voltage Used (VDC): 20.4
Class: Class B Usage: Notification Description: NAC 57

Wire Type	Ohms/1000ft	Length 1-Way	Actual Ohms	Max Load (amps	Volts @ EOL	Min Volts Req'd
#14 Solid	3.19	160	1.021	0.414	19.98	16

Qty	Circuit Devices Lookup Type	Description	Standby (amps) Each	Standby (amps) Total	Alarm (amps) Each	Alarm (amps) Total
3	User Defined	S/S HLF	0.000000	0.000000	0.138000	0.414000
		User can add devices on the fly				
		to these bottom 5 rows				
		(No lookup function)				
			Total Standby:	0.00000	Total Alarm:	0.41400

AUX Power MAX Circuit Current (amps): 3 Source Voltage Used (VDC): 20.4
Usage: Notification Description: NAC 58

Wire Type	Ohms/1000ft	Length 1-Way	Actual Ohms	Max Load (amps	Volts @ Last Device	Min Volts Req'd
#14 Solid	3.19	190	1.212	0.414	19.90	16

Qty	Circuit Devices Lookup Type	Description	Standby (amps) Each	Standby (amps) Total	Alarm (amps) Each	Alarm (amps) Total
3	User Defined	S/S HLF	0.000000	0.000000	0.138000	0.414000
		User can add devices on the fly				
		to these bottom 5 rows				
		(No lookup function)				
			Total Standby:	0.00000	Total Alarm:	0.41400

BATTERY CALCS - BLDG 2 (CONT.)

SCALE : N/A

1

JSC ENGINEERS
MO COA NO. 2012006786 / KS COA NO. E-2818
1925 CENTRAL ST. SUITE #201
KANSAS CITY, MO 64108
phone: (816) 272-5289
email: jsmothers@jscengineers.com

STATE OF MISSOURI
JESSEY P. BORRIS
NUMBER PE-2019041526
PROFESSIONAL ENGINEER
04-13-2022

FIRE ALARM CONTRACTOR:
SIG
SYSTEM INTEGRATION GROUP

PROJECT:
SIGNATURE AT PRYOR II
2100 AND 2150 NW LOWENSTEIN DR.
LEE'S SUMMIT, MISSOURI 64081

REVISIONS: DATE / DESCRIPTION
1
2
3
4
5

Copyright 2022 JSC Engineers

ISSUED:
PERMIT

SHEET TITLE:
BATTERY CALCULATIONS

DATE: 04.13.2022
JOB NO.: 22-094
SHEET:
FA313