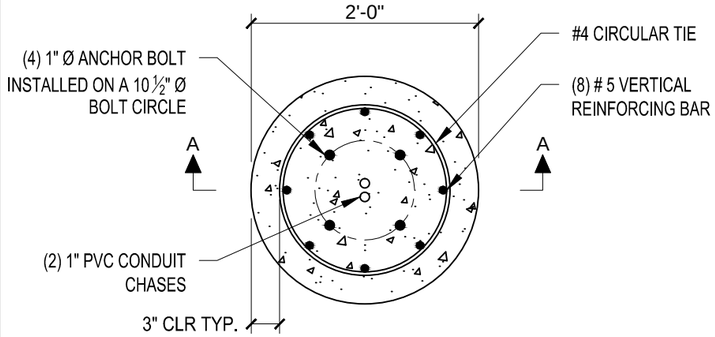

POLE BASE - PLAN VIEW

SCALE ¾" = 1'-0"

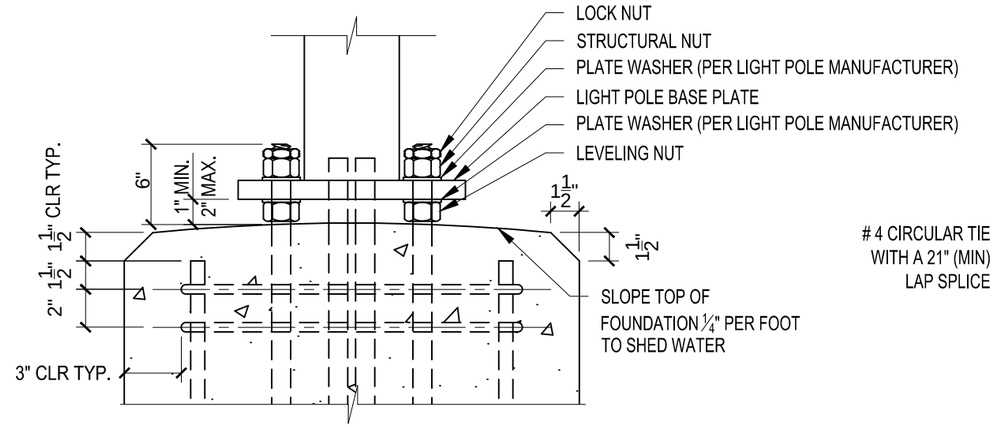

LIGHT POLE BASE ON TOP OF FOUNDATION

SCALE 1½" = 1'-0"

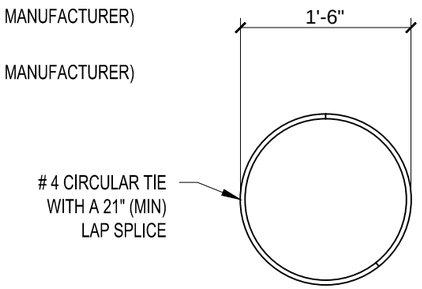

CIRCULAR TIE DETAIL

SCALE ¾" = 1'-0"

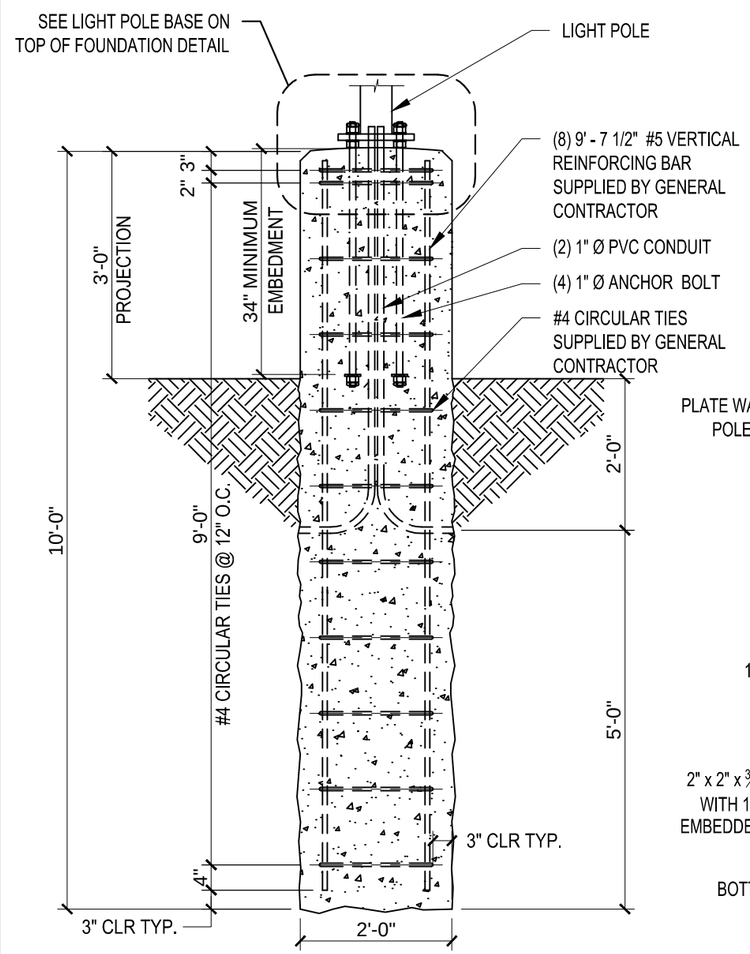

VIEW A-A

SCALE ½" = 1'-0"

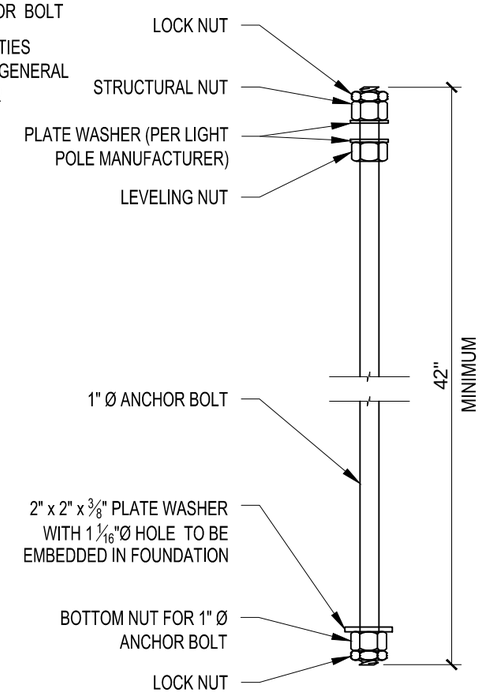

ANHCOR BOLT DETAIL

SCALE 1½" = 1'-0"

DESIGN CRITERIA:

AASHTO "STANDARD SPECIFICATIONS FOR STRUCTURAL SUPPORTS FOR HIGHWAY SIGNS, LUMINAIRES AND TRAFFIC SIGNALS, FIFTH EDITION, 2009

FOUNDATION DESIGN PARAMETERS:

1. MAXIMUM LIGHT POLE BASE REACTIONS:
   - BASE MOMENT = 16,845 lbs-ft
   - BASE SHEAR = 978 lbs
2. MAXIMUM WIND SPEED (3 SECOND GUST) = 120MPH
3. MINIMUM REQUIRED SOIL PARAMETERS:
   - COHESIVE SOILS:
     - SHEAR STRENGTH = 750 lbs/ft²
     - 6" MAXIMUM DEPTH OF DISTURBED SOIL OR TOP SOIL
   - COHESIONLESS SOILS:
     - ANGLE OF INTERNAL FRICTION = 27 DEGREES
     - WATER TABLE SHALL BE LOCATED BELOW THE BOTTOM OF THE FOUNDATION
     - 6" MAXIMUM DEPTH OF DISTURBED SOIL OR TOP SOIL
4. THE SOILS REPORT SHALL BE REVIEWED BY THE ENGINEER OF RECORD TO CONFIRM THAT THE MINIMUM SOIL PARAMETERS ARE MET OR EXCEEDED BEFORE THIS DESIGN IS USED. IF THE MINIMUM SOIL PARAMETERS ARE NOT MET, THIS DESIGN SHALL NOT BE USED.
5. THE ENGINEER OF RECORD SHALL REVIEW THE MAXIMUM BASE REACTIONS AND DESIGN WIND SPEED FOR THE LIGHT POLE TO BE INSTALLED TO DETERMINE IF THE FOUNDATION'S MAXIMUM DESIGN LOADS HAVE NOT BEEN EXCEEDED. THIS FOUNDATION DESIGN SHALL NOT BE USED IF THE MAXIMUM DESIGN LOADS OR WIND SPEED HAVE BEEN EXCEEDED.
6. THIS FOUNDATION DESIGN SHALL NOT BE USED IN LOCATIONS WHICH ARE CLOSER THAN 8ft FROM A RETAINING WALL.
7. THIS FOUNDATION DESIGN SHALL NOT BE USED AT LOCATIONS WHERE THE GROUND SLOPE EXCEEDS 4 inches per foot.

GENERAL NOTES:

1. CONCRETE COMPRESSIVE STRENGTH (f'c) SHALL BE A MINIMUM OF 3000psi
2. ANCHOR BOLTS SHALL BE ASTM F1554 GRADE 55, HOT DIP GALVANIZED PER ASTM F2329
3. REINFORCING STEEL SHALL BE ASTM A615 GRADE 60, SUPPLIED BY GENERAL CONTRACTOR
4. NUTS SHALL BE HEAVY HEX ASTM A563 GRADE DH, HOT DIP GALVANIZED PER ASTM A153
5. PLATE SHALL BE ASTM A572 GRADE 50, HOT DIP GALVANIZED PER ASTM A153
6. LOCK NUT SHALL BE HOT DIP GALVANIZED PER ASTM A153

Mark	Date	Description

Project No.

Date

Drawn

Checked

Scale

Sheet Title

Sheet No.