ELEVATION NOTES

1. FINAL GRADE LINE MAY VARY PER EXISTING SITE CONDITIONS. REFER TO PLOT PLAN FOR SPECIFIC SITE GRADE CONDITIONS.
2. ALL ROOFING TO BE ASPHALT COMPOSITION UNLESS NOTED OTHERWISE.
3. ROOF AND SOFFIT VENTS PER LOCAL CODES. WHERE POSSIBLE, PROVIDE ROOF VENTING ON BACK SIDE OF ROOF.
4. GUTTER AND DOWNSPOUT LOCATIONS TO BE DETERMINED BY GUTTER INSTALLER.
5. SMART PANEL SIDING ON SIDE AND REAR ELEVATIONS UNLESS NOTED OTHERWISE.

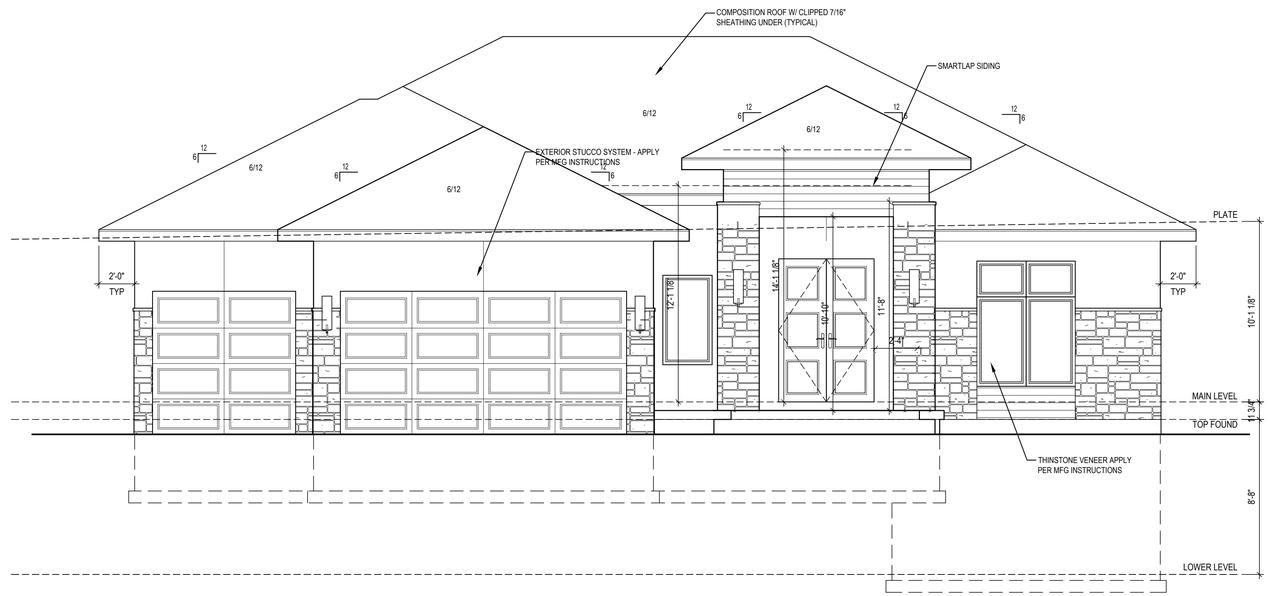

Front Elevation 1
1/4" = 1'-0"

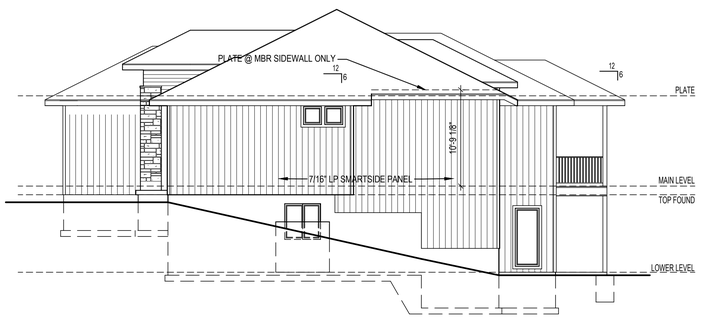

Side Right Elevation 2
1/8" = 1'-0"

Rear Elevation 3
1/8" = 1'-0"

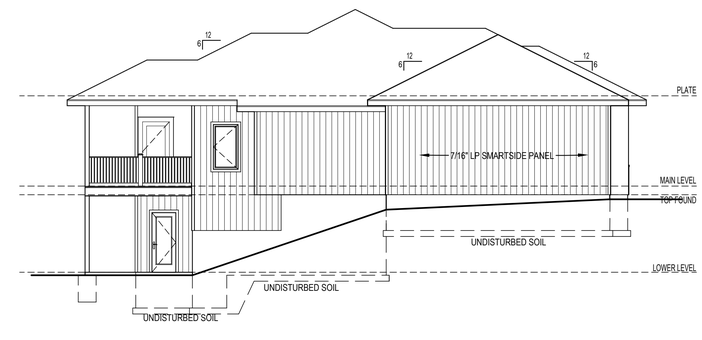

Side Left Elevation 4
1/8" = 1'-0"

Digitally signed by Kim Brennan
Reason: Release for Construction
Date: 2021.12.20 10:51:52-06'00'
Kim Brennan

RELEASE FOR CONSTRUCTION
AS NOTED ON PLANS REVIEW
Development Services
LEE'S SUMMIT, MISSOURI

HANDCRAFTED HOMES
JFE Construction
A JEFFRIES COMPANY

© COPYRIGHT 2021

JFE CONSTRUCTION INC.
1314 SW Market Street
Lee's Summit, MO 64081
v: 816.786.4008
jfeconstruction.com

VAN DEURZEN & ASSOCIATES, P.A.
11211 KINGS STREET, SUITE 130
OVERLAND PARK, KS 66210
(913) 451-6305 FAX (913) 451-1021
WEB PAGE: WWW.VANDEURZENASSOC.COM
E-MAIL: VDA@VANDEURZENASSOC.COM

Van Deurzen and Associates, P.A. © 2021

STATE OF MISSOURI
CHAD M. STREETER
NUMBER PE-2005010817
PROFESSIONAL ENGINEER
12/3/2021

THE GUNNISON MODERN

Spec Residence
2826 SW Hearthstone Place, Lee's Summit, MO
Lot 50 - Hook Farms Retreat

Project #:	8083-XXXX
DATE:	
Permit:	12/3/2021

Exterior Elevations

A100

GENERAL NOTES

1. BUILDING PERMIT WILL BE REQUIRED FOR THE PROJECT. THIS SET OF DOCUMENTS TO BE SUBMITTED AS A PERMIT SET OF DRAWINGS.
2. ALL CONTRACTORS SHALL VISIT THE JOB SITE AND SHALL REVIEW THE PERMIT DRAWINGS TO FAMILIARIZE HIMSELF WITH THE REQUIREMENTS AND INTENT OF THE SCOPE OF WORK. ANY DEFICIENCIES OR DISCREPANCIES DISCOVERED SHALL BE REPORTED FOR REVIEW AND CLARIFICATION PRIOR TO COMMENCING ANY WORK.
3. ALL NEW CONSTRUCTION SHALL MEET LATEST EDITIONS OF ALL APPLICABLE NATIONAL, STATE, AND LOCAL BUILDING CODES – INTERNATIONAL RESIDENTIAL CODE.
4. WORKMANSHIP SHALL BE OF THE HIGHEST QUALITY. QUALITY MATERIALS SHALL BE USED THROUGHOUT. ALL WORK SHALL BE DONE IN A MANNER SO AS TO MATCH ADJACENT WORK AND FINISHES AND APPROVED BY OWNER.
5. CONTRACTORS SHALL REMOVE ALL CONSTRUCTION DEBRIS. ALL CONSTRUCTION DEBRIS SHALL BE CONTAINED PER CITY REQUIREMENTS.
6. AREAS FOR MATERIAL STORAGE, TRASH DISPOSAL, WORKMEN'S PARKING, ETC., SHALL BE COORDINATED WITH THE CITY.
7. ALL DIMENSIONS TO BE VERIFIED BY CONTRACTOR.
8. IT IS THE RESPONSIBILITY OF THE CONTRACTORS TO COORDINATE WITH THE OWNER THE QUANTITY AND LOCATION FOR ALL LIGHTING, ELECTRICAL OUTLETS, TELEPHONE OUTLETS, AND MECHANICAL AND PLUMBING SYSTEMS AS REQUIRED.
9. THE CONTRACTORS SHALL ADHERE TO THE STATE OF KANSAS ONE CALL SYSTEM, 1-800-344-7233 (MISSOURI ONE CALL SYSTEM, 1-800-344-7483). THE PERSON OR FIRM DOING EXCAVATION ON PUBLIC RIGHT OF WAY MUST GIVE NOTICE TO, AND OBTAIN INFORMATION FROM, UTILITY COMPANIES. THE CONTRACTORS SHALL NOTIFY THOSE COMPANIES WHICH HAVE FACILITIES IN THE NEAR VICINITY OF THE CONSTRUCTION TO BE PERFORMED WHEN WORK COMMENCES.

GENERAL FOUNDATION REQUIREMENTS

1. ALL FOOTINGS ARE TO BE EXTENDED TO MIN 36" BELOW FINISHED GRADE.
2. ALL INTERIOR FOOTINGS FOR LOAD BEARING WALLS AND COLUMNS SHALL BE ISOLATED FROM THE BASEMENT FLOOR SLAB.
3. FOR ALL CONC WALL OPENINGS, FOOTING & WALL STEPS, PROVIDE ONE #4 BAR, 48" LONG DIAGONALLY AS CLOSE AS PRACTICAL TO CORNER.
4. ALL REINFORCEMENT SHALL BE LAPPED A MIN OF 24" AT ENDS SPLICES AND AROUND CORNERS.
5. ANCHOR BOLTS ARE TO BE SPACED @ 36"c WITH 7" MIN EMBED. A BOLT SHALL BE PLACED WITHIN 12" OF THE END OF EACH PLATE SECTION.
6. FASTEN JOISTS TO SILL PLATES WITH (3) 8d COM NAILS.
7. WHERE JOIST IS PARALLEL TO FOUNDATION, PROVIDE SOLID BLOCKING @ 32"c FOR (3) JST SPACES. FASTEN TO SILL PLATE PER NOTE 6.
8. VAPOR BARRIER: 6 MIL PE VAPOR RETARDER WITH JOINTS LAPPED A MIN OF 6" BETWEEN SLAB & BASE.
9. DAMP PROOFING: ONE COAT (MIN) OF DAMP PROOFING OR EQUIVALENT FOUNDATION MEMBRANE SHALL BE APPLIED TO EXTERIOR WALL SURFACES BELOW GRADE. SEAL TIE HOLES, VOIDS BEFORE APPLICATION.
10. FOUNDATION DRAIN: INSTALL CONT 4"- PERFORATED PVC DRAIN TILE. DRAIN TILE TO BE EXTENDED TO SQUARE SUMP PIT WHICH EXTENDS A MIN 24" BELOW BASEMENT FLOOR.
11. ALL FRAMING MEMBERS IN CONTACT WITH CONCRETE SHALL BE ACQ TREATED LUMBER.
12. ALL STEEL FASTENERS (INCLUDING FOUND. ANCHOR BOLTS) ON ACQ TO BE (DOUBLE HOT-DIPPED) GALVANIZED.
13. PROVIDE A "UFER" GROUND PER IRC 3608.1
14. EGRESS WELL REQUIREMENTS:
    A. IF THE VERTICAL DISTANCE FROM THE WINDOW SILL TO ADJACENT GRADE IS GREATER THAN 44", PROVIDE A LADDER.
    B. ADD DRAIN TO DAYLIGHT OR SUMP PUMP.

COLUMN & PIER PAD SCHEDULE

COLUMN MARK	PAD SIZE	REINFORCEMENT	COLUMN SIZE
A	36"x36"x12"	(6) #4 BAR E.W.	3"Ø SCHED 40
B	42"x42"x14"	(7) #4 BAR E.W.	3"Ø SCHED 40
C	48"x48"x16"	(8) #4 BAR E.W.	3"Ø SCHED 40
D	54"x54"x16"	(9) #4 BAR E.W.	3 1/2"Ø SCHED 40
E	60"x60"x18"	(10) #4 BAR E.W.	3 1/2"Ø SCHED 40

1. COLUMN & PIER PAD SIZES SHOWN ARE BASED ON AN ASSUMED MINIMUM ALLOWABLE SOIL BEARING CAPACITY OF 1,500 psf.
2. GARAGE FOOTINGS PER DETAIL, COLUMN NOT REQUIRED UNLESS NOTED ON PLANS

I JOIST AND TRUSS NOTES

1. FLOOR TRUSS OR I-JOIST LOADING SHALL BE PER THE GENERAL NOTES
2. I JOISTS MAY BE SHOWN AS SIMPLE SPAN TO DEFINE SPANS AND BEARING POINTS. TRUSS MFG TO RUN CONTINUOUS WHERE POSSIBLE.
3. COORDINATE I-JOISTS LOCATIONS WITH PLUMBING DRAIN LINES AT ALL TOILET LOCATIONS.
4. JOIST BLOCKING WHERE NOTED ON PLANS MAY BE OMITTED AT HVAC AND PLUMBING LOCATIONS AS REQUIRED.
5. EXACT I-JOIST OR FLOOR TRUSS LAYOUT TO BE PROVIDED BY TRUSS MANUFACTURER. DESIGN AND LAYOUT TO BE SUBMITTED TO VAN DEURZEN AND ASSOCIATES TO REVIEW FOR GENERAL CONFORMANCE TO THE DESIGN OF THE BUILDING PRIOR TO SUBMITTAL TO THE CODES ADMINISTRATION FOR PERMITTING.
6. IF A CONFLICT EXISTS BETWEEN SHOP DRAWINGS AND CONTRACT SET, THE CONTRACT SET SUPERCEDES THE JOIST/TRUSS LAYOUT.

I JOIST FIRE PROTECTION

ALL I-JOIST AND OPEN WEB TRUSSES OVER UNFINISHED SPACE EXCEEDING 80 SQUARE FEET IN AGGREGATE AREA TO BE PROTECTED BY THE FOLLOWING METHOD:

- 3" MINERAL/ROCK WOOL COVERING BTM CHORD AND NETTING PER APA FORM R425 METHOD 4

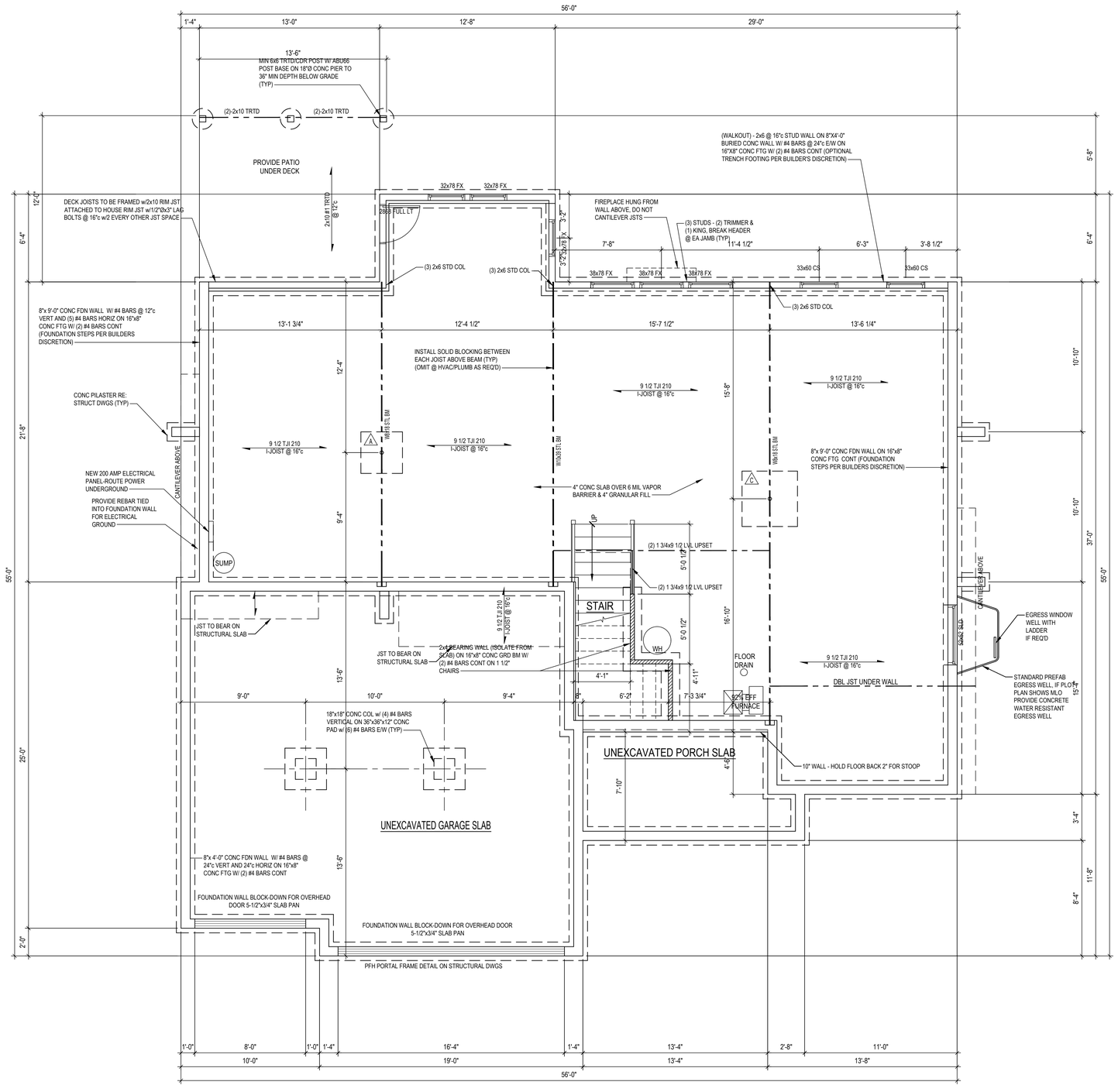

LOAD BEARING WALL
LOAD BEARING BEAM

Foundation Plan
1/4" = 1'-0"
1

HANDCRAFTED HOMES JFE Construction A JEFFRIES COMPANY

© COPYRIGHT 2021

JFE CONSTRUCTION INC.
1314 SW Market Street
Lee's Summit, MO 64081
v: 816.786.4008
jfeconstruction.com

VAN DEURZEN & ASSOCIATES, P.A.
11211 KING STREET, SUITE 130
OVERLAND PARK, KS 66210
(913) 451-6305 FAX (913) 451-1021
WEB PAGE: WWW.VANDEURZENASSOC.COM
E-MAIL: VDA@VANDEURZENASSOC.COM

Van Deurzen and Associates, P.A. © 2021

STATE OF MISSOURI
CHAD M. STREETER
NUMBER PE-2005010817
PROFESSIONAL ENGINEER
12/3/2021

THE GUNNISON MODERN

Spec Residence
2826 SW Hearthstone Place, Lee's Summit, MO
Lot 50 - Hook Farms Retreat

Project #:	8083-XXXX
	DATE:
Permit:	12/3/2021

Foundation Plan

A101

RELEASE FOR CONSTRUCTION AS NOTED ON PLANS REVIEW
Development Services
LEE'S SUMMIT, MISSOURI

GENERAL PLAN REQUIREMENTS:

1. ALL STUD WALL FRAMING SHALL BE CONTINUOUS FROM THE FLOOR TO ROOF OR CEILING DIAPHRAGM, U.N.O. ALL WALLS OVER 10'-0" ARE TO BE 2x6 @ 16"c U.N.O.
2. PROVIDE WATER-RESISTANT EXTERIOR WALL COVERING ON ALL FRAMED WALLS TO COMPLY WITH IRC SECTION 703.2.
3. PROVIDE GFCI ELECTRICAL OUTLETS ON EXTERIOR, IN UNFINISHED BASEMENT, IN BATHROOMS, ABOVE KITCHEN COUNTERS, IN GARAGE, AND WITHIN 6'-0" OF ANY SINK.
4. ALL EXTERIOR DOORS SERVED BY LANDING.
5. INSTALL CARBON MONOXIDE DETECTORS PER IRC SECTION 315 OUTSIDE OF EACH SLEEPING AREA.
6. INSTALL SMOKE DETECTORS IN EACH SLEEPING ROOM, OUTSIDE OF EACH SLEEPING AREA, WITH A MINIMUM OF ONE ON EACH FLOOR PER IRC SECTION 314.
7. PROVIDE A "UFER" GROUND PER IRC 3608.1.
8. REFER TO SHEET S3 FOR ALL WALL BRACING DETAILS AND/OR CALCULATIONS.
9. INSTALL BLOCKING FOR TP HOLDERS, TOWEL BARS, AND TRIM BEAMS.
10. GARAGE DOOR H-FRAME: THE H-FRAME FOR ATTACHMENT OF THE TRACK AND COUNTER BALANCE SHALL CONSIST OF THE FOLLOWING: 2x6 VERTICAL JAMBS RUNNING FROM FLOOR TO CELING ATTACHED WITH 3 1/4"x.120 NAILS @ 7"c STAGGERED WITH (7) 3 1/4x.120 NAILS THRU JAMB INTO HEADER. MINIMUM 2x8 HEADER FOR ATTACHMENT OF COUNTER BALANCE SYSTEM.
11. OVERHEAD GARAGE DOORS TO MEET 115 MPH WIND LOAD RESISTANCE REQUIREMENTS OF DASMA 108-17 AND ASTM E 330-02 PER IRC SECTION R 609.4.
12. MAXIMUM RISER HEIGHT OF STAIRWAYS SHALL NOT EXCEED 7 3/4" AND THE TREADS SHALL PROVIDE A MINIMUM TREAD DEPTH OF 10".
13. ALL EXTERIOR AND LOAD BEARING WINDOW AND DOOR HEADERS TO BE (2) 2x10 D.FIR #2 UNLESS NOTED OTHERWISE ON PLANS
14. ALL HEADER BEARINGS (OTHER THAN WINDOWS) TO BE (2) 2x4 STUDS UNLESS NOTED OTHERWISE. WINDOW HEADER BEARING TO BE (1) 2x4 EA END UNLESS NOTED OTHERWISE.
15. ALL EXTERIOR PLATE HGTS TO BE 9'-0" UNLESS OTHERWISE NOTED. INTERIOR PLATE HGTS AS INDICATED IN ROOM CLG HEIGHTS NOTATION.
16. NO HANDRAIL IS REQ'D FOR STEPS HAVING LESS 3 RISERS OR LESS.
17. ANY LUMBER IN DIRECT CONTACT WITH CONCRETE TO BE TREATED.

ENERGY REQUIREMENTS

CONTRACTOR TO PROVIDE ENERGY AUDIT USING THE HERS ENERGY RATING SYSTEM. IN LIEU OF AN ENERGY AUDIT, THE FOLLOWING PRESCRIPTIVE REQUIREMENTS MAY BE FOLLOWED:

A. ALL DUCTS, AIR HANDLERS, FILTER BOXES, AND BUILDING CAVITIES TO BE SEALED PER IRC SECTION N1103.2
B. THE BUILDING THERMAL ENVELOPE IS REQUIRED TO BE SEALED PER IRC SECTION N1102.4.
C. CONTRACTOR TO SUBMIT "MANUAL J" AND "MANUAL D" CALCULATIONS FOR THE HVAC SYSTEM
D. INSULATION TO COMPLY WITH IECC AS FOLLOWS:

WALLS	R-13
CEILING (FLAT)	R-49
CEILING (VAULTED)	R-38 (NOTE: VAULTED AREA NOT TO EXCEED 500sq ft OR 20% OF ROOF AREA, WHICHEVER IS LESS)
FLOORS OVER	
UNCONDITIONED SPACE	R-19
CRAWL SPACE WALLS	R-13 (or R-10 CONTINUOUS)
BASEMENT WALLS	R-13 (or R-10 CONTINUOUS)
SLABS	N/R
DUCTWORK	R-8
WINDOWS	
U-FACTOR	U 0.35 (MAX)
SHGC	0.40 (MAX)
SKYLIGHTS	
U-FACTOR	U 0.55 (MAX)
SHGC	0.40 (MAX)

WINDOW AND DOOR NOTES

1. ALL WINDOWS ARE SHOWN IN INCHES (I.E. 3060 IS A 30"x60" WINDOW). ALL DOORS SHOWN IN FEET AND INCHES (I.E. 2868 DOOR IS A 2'-8"x6'-8" DOOR). CONTRACTOR/INSTALLER TO VERIFY R.O. DIMENSIONS WITH BUILDER SUPPLIED CUT SHEET PRIOR TO FRAMING.
2. ALL WINDOWS TO BE LOW-E GLASS TO MEET ALL LOCAL ENERGY CODE REQUIREMENTS.
3. PROVIDE EGRESS WINDOW IN ALL SLEEPING ROOMS. WINDOWS SHALL COMPLY WITH THE FOLLOWING:
   A. MINIMUM OPEN AREA 5.7 SF
   B. MINIMUM OPENING HEIGHT 24 INCHES
   C. MINIMUM OPENING WIDTH 20 INCHES
   D. SILL HEIGHT 44" MAX ABOVE FLOOR
4. ALL WINDOW SILLS ARE TO BE 24" MIN ABOVE FINISH FLOOR, OR SHALL BE FIXED/INOPERABLE
5. ALL WINDOWS TO BE FRAMED TIGHT TO HEADERS UNLESS NOTED OTHERWISE ON ELEVATIONS
6. ALL WINDOWS AND GLAZED DOORS SHALL COMPLY WITH IRC SECTION R308. IRC SECTION R308.4: GLAZING IN HAZARDOUS LOCATIONS SHALL BE OF APPROVED SAFETY GLAZING MATERIALS. GLASS IN STORM DOORS, INDIVIDUAL FIXED OR OPERABLE PANELS ADJACENT TO A DOOR WHERE THE NEAREST VERTICAL EDGE IS WITHIN A 24" ARC OF THE DOOR IN A CLOSED POSITION AND WHOSE BOTTOM EDGE IS WITHIN 60" OF THE FLOOR, WALLS ENCLOSING STAIRWAYS AND LANDINGS WHERE THE GLAZING IS WITHIN 60" OF THE TOP OR BOTTOM OF STAIR, ENCLOSURES FOR TUBS, SHOWERS AND WHIRLPOOLS, GLAZING IN FIXED OR OPERABLE PANELS EXCEEDING 9 SF AND WHOSE BOTTOM EDGE IS LESS THAN 18" ABOVE THE FLOOR OR WALKING SURFACE WITHIN 36".
7. ALL OPERABLE WINDOWS SHALL HAVE FALL PROTECTION PER IRC R612.2.
8. ALL GLAZING IN WINDOWS AND DOORS SHALL COMPLY WITH THE TEST CRITERIA FOR CATEGORY II IN ACCORDANCE WITH CPSC 16 CFR 1201.
9. WINDOW MANUFACTURER TO CONFIRM EXACT SAFTEY AND EGRESS WINDOW LOCATIONS PER LOCAL CODES.

WALL BRACING NOTES:

SHEATHING METHOD CS-WSP, WSP, PFH, GB (or LIB), CS-PF

1. ALL EXTERIOR WALLS ARE TYPE "CS-WSP" AND ARE CONTINUOUSLY SHEATHED UNLESS NOTED OTHERWISE, THE BRACED WALL NOTATIONS (IF SHOWN) REFLECT THE MINIMUM SHEATHING REQUIREMENTS PER CODE.
2. IF NO NOTATIONS ARE SHOWN FOR WALLS TYPE "CS-WSP" ON PLAN, WALL IS FULLY SHEATHED AND MEETS ALL REQUIREMENTS WITH END CONDITION #1, #3, OR #4.
3. EC # - END CONDITION PER IRC FIGURE R602.10.7, (FOR CONDITIONS #1, #3, & #4 NO HOLDDOWN REQUIRED
4. INTERIOR WALL BRACING NOT REQUIRED FOR BRACED WALL SPACING 60FT OR LESS

XX" PANEL — DENOTES EXTERIOR BRACED WALL WOOD STRUCTURAL PANEL (WSP or CS-WSP) ATTACHED PER DETAILS AND GENERAL NOTES

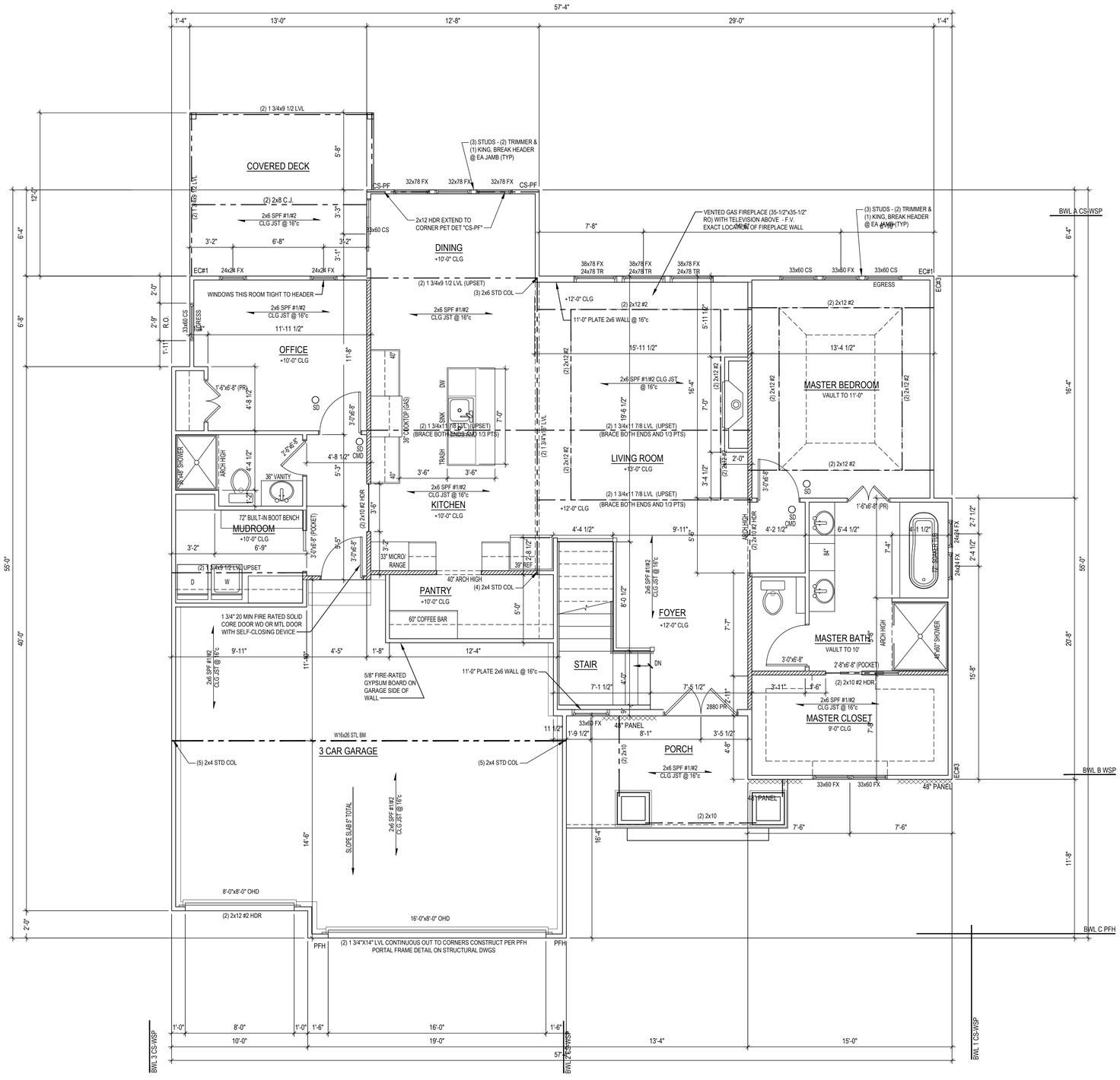

MAIN LEVEL	
FINISH:	1774 SF
GARAGE:	657 SF
COVERED DECK:	156 SF
FRONT PORCH:	104 SF

LOAD BEARING WALL

LOAD BEARING BEAM

First Floor Plan
1/4" = 1'-0"
1

JFE Construction
HANDCRAFTED HOMES
A JEFFRIES COMPANY

© COPYRIGHT 2021

JFE CONSTRUCTION INC.
1314 SW Market Street
Lee's Summit, MO 64081
v: 816.786.4008
jfeconstruction.com

VAN DEURZEN & ASSOCIATES, P.A.
11211 KING STREET, SUITE 130
OVERLAND PARK, KS 66210
(913) 451-6305 FAX (913) 451-1021
WEB PAGE: WWW.VANDEURZENASSOC.COM
E-MAIL: VDA@VANDEURZENASSOC.COM

Van Deurzen and Associates, P.A. © 2021

STATE OF MISSOURI
CHAD M. STRESTER
NUMBER PE-2005010817
PROFESSIONAL ENGINEER
12/3/2021

THE GUNNISON MODERN

Spec Residence
2826 SW Hearthstone Place, Lee's Summit, MO
Lot 50 - Hook Farms Retreat

Project #:	8083-XXXX
	DATE:
Permit:	12/3/2021

First Floor Plan

A102

RELEASE FOR CONSTRUCTION AS NOTED ON PLANS REVIEW
Development Services
LEE'S SUMMIT, MISSOURI

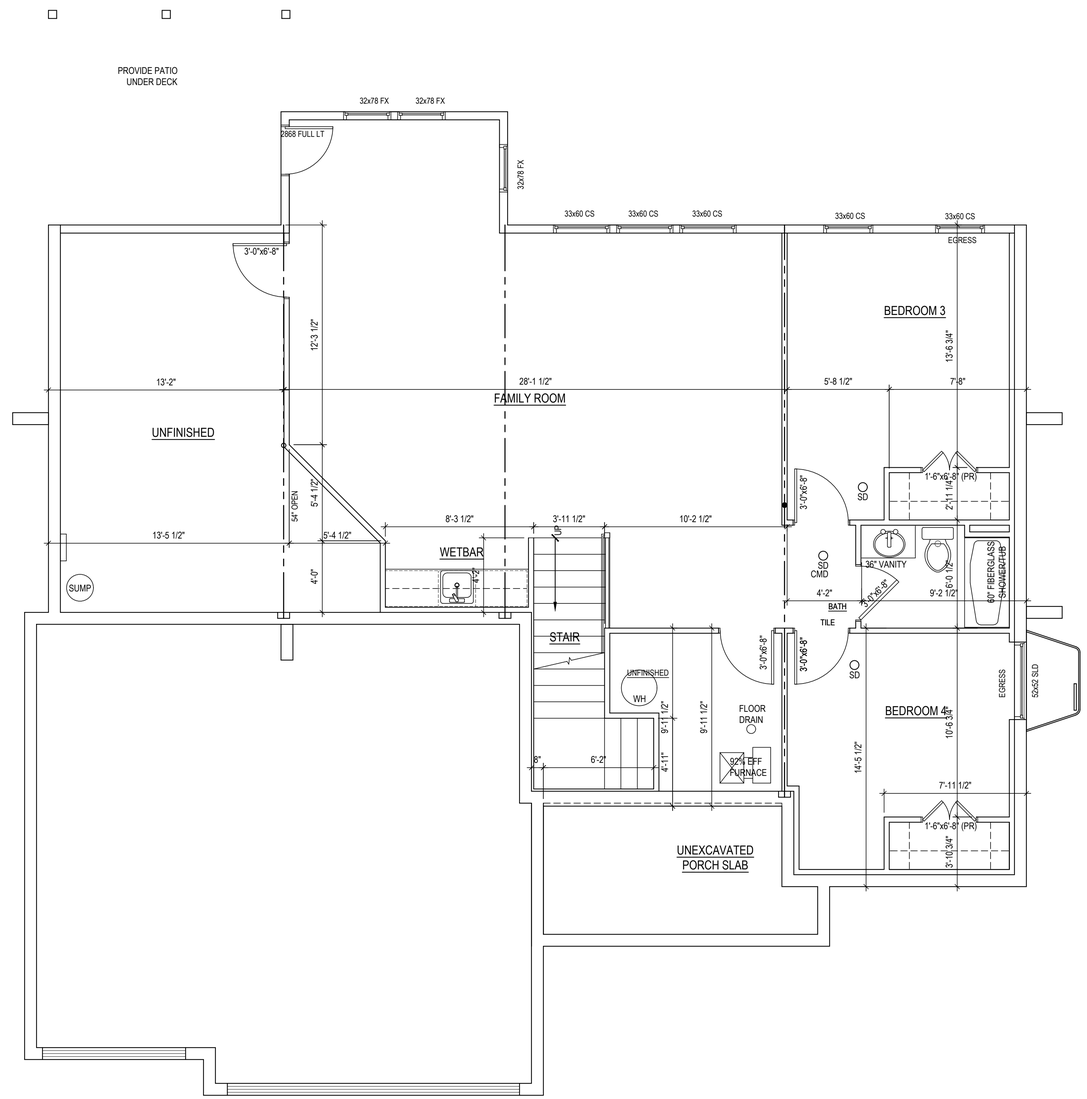

LOWER LEVEL FINISH: 1095
SF UNFINISHED: 428 SF

Basement Finish Plan
1/4" = 1'-0"

1

HANDCRAFTED HOMES
JFE Construction
A JEFFRIES COMPANY

© COPYRIGHT 2021

JFE CONSTRUCTION INC.
1314 SW Market Street
Lee's Summit, MO 64081
v: 816.786.4008
jfeconstruction.com

VAN DEURZEN & ASSOCIATES, P.A.
11211 KING STREET, SUITE 130
OVERLAND PARK, KS 66210
(913) 451-6305 FAX (913) 451-1021
WEB PAGE: WWW.VANDEURZENASSOC.COM
E-MAIL: VDA@VANDEURZENASSOC.COM

Van Deurzen and Associates, P.A. © 2021

STATE OF MISSOURI
CHAD M. STREETER
NUMBER PE-2005010817
PROFESSIONAL ENGINEER
12/3/2021

THE GUNNISON MODERN

Spec Residence
2826 SW Hearthstone Place, Lee's Summit, MO
Lot 50 - Hook Farms Retreat

Project #:	8083-XXXX
DATE:	
Permit:	12/3/2021

Basement Finish Plan

A103

RELEASED FOR CONSTRUCTION
AS NOTED ON PLANS REVIEW
Development Services
LEE'S SUMMIT, MISSOURI

ROOF PLAN NOTES

1. ALL ROOF RAFTERS NOT CALLED OUT ARE TO BE 2x6 SPF #1/#2 @ 16"c
2. ALL CEILING JOISTS NOT CALLED OUT ARE TO BE 2x6 SPF #1/#2 @ 16"c
3. ALL VAULTS TO BE FURRED DOWN w/2x MATERIAL TO PROVIDE FOR R-38 INSULATION
4. ALL EXTERIOR AND LOAD BEARING WINDOW AND DOOR HEADERS TO BE (2) 2x10 D.FIR #2 UNLESS NOTED OTHERWISE ON PLANS
5. ALL RIDGES, HIPS, AND VALLEYS NOT MARKED SHALL BE (1) NOMINAL SIZE LARGER THAN THE INTERSECTING RAFTERS
6. CEILING JOISTS AND RAFTERS SHALL BE NAILED TO EACH OTHER WITH (3) 16d COM (3 1/2"x0.162") NAILS AND THE RAFTER SHALL BE NAILED TO THE TOP WALL PLATE WITH (3) 8d COM (2 1/2"x0.131") NAILS. CEILING JOISTS SHALL BE CONTINUOUS OR SECURELY JOINED WITH (3) 16d COM (3 1/2"x0.162") NAILS WHERE THEY MEET OVER INTERIOR PARTITIONS AND ARE NAILED TO ADJACENT RAFTERS TO PROVIDE A CONTINUOUS TIE ACROSS THE BUILDING WHEN SUCH JOISTS ARE PARALLEL TO THE RAFTERS.
7. WHERE CEILING JOISTS ARE NOT CONNECTED TO THE RAFTERS AT THE TOP WALL PLATE (or AT LOCATIONS WHERE C.J. ARE PERPENDICULAR TO RAFTERS), INSTALL 2x4 RAFTER TIES @ 16"c WITH (3) 16d COM (3 1/2"x0.162") NAILS EA END.
8. RAFTER CONNECTIONS DESIGNED TO RESIST UPLIFT FORCES PER IRC TABLE 802.11. ROOF HEADERS DO NOT HAVE NOTABLE UPLIFT TO REQUIRE HOLD DOWNS. REFER TO STRUCTURAL DETAIL SHEET S1 CONNECTION TABLE FOR FASTENERS
9. INSTALL 2x4 COLLAR TIES @ 48"c IN UPPER 1/3rd OF ROOF RAFTER.
10. PROVIDE METAL FLASHING AT ALL ROOF VALLEYS.
11. ROOF AND SOFFIT VENTS PER LOCAL CODES. WHERE POSSIBLE, PROVIDE ROOF VENTING ON BACK SIDE OF ROOF. BATH VENTS TO VENT DIRECTLY TO THE OUTSIDE.
12. EXACT GUTTER AND DOWNSPOUT LOCATION BY GUTTER INSTALLER.
13. PER IRC SECTION R802.3 - FOR ROOF PITCHES 3/12 OR GREATER, STRUCTURAL MEMBERS THAT SUPPORT RAFTERS AND CEILING JOISTS SUCH AS RIDGE BEAMS, HIPS AND VALLEYS THAT ARE SUPPORTED BY BRACES AND/OR PURLINS AT THE ENDS ARE ARE NOT REQUIRED TO BE DESIGNED AS BEAMS AND ARE TO BE FRAMED USING LUMBER THAT IS NOMINALLY 2" WIDE BY ONE SIZE GREATER THAN ATTACHING FRAMING MEMBER (NOTE #5). THERE IS NO STRUCTURAL LINE LOADING ON THE MEMBER.

ROOF BRACING

1. ROOF PURLINS TO BE PLACED APPROXIMATELY WHERE SHOWN ON PLANS. USE 2x6 STUD GRADE PURLIN PLACED PERPENDICULAR TO RAFTERS (UNLESS NOTED OTHERWISE ON PLANS)
2. RIDGE, HIP, VALLEY, AND PURLIN BRACE STRUTS TO BE PLACED AS SHOWN ON PLANS. STRUTS TO BE 2x4 STUD GRADE w/ MAXIMUM UNBRACED LENGTH OF 8'-0" AND AT A 45° ANGLE w/ HORIZONTAL OR GREATER (VERTICAL WHERE POSSIBLE)
3. BRACES LONGER THAN 8'-0" SHALL BE 2x4 STRONG BACK BRACES

LOAD BEARING INTERIOR WALL BELOW

LOAD BEARING BEAM BELOW

2x6 ROOF PURLIN (UNLESS NOTED OTHERWISE ON PLANS)

2x4 PURLIN/RIDGE BRACING (STRONG BACK IF OVER 8'-0" LONG)

2x4 STRONG BACK POST

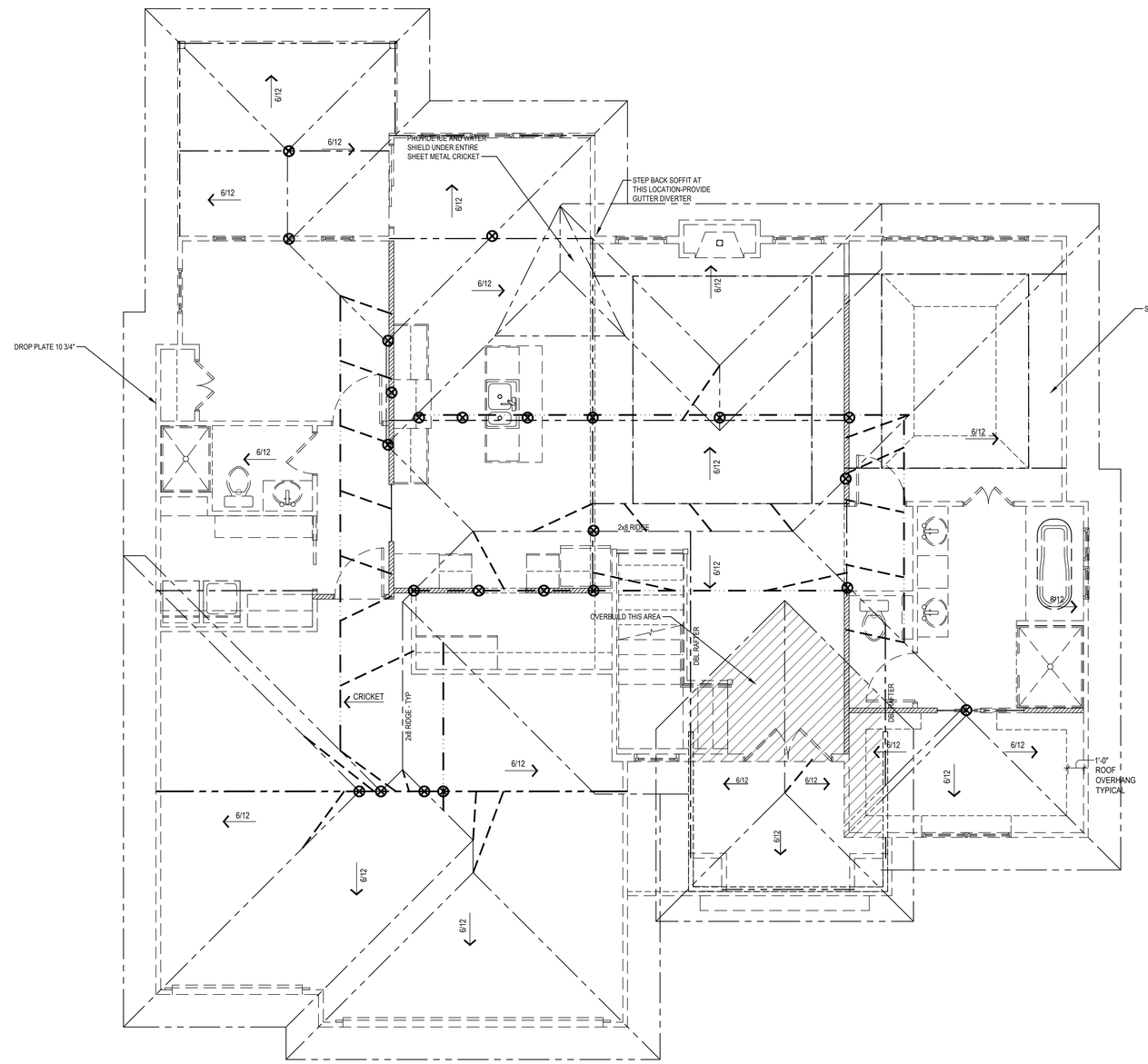

Roof Plan
1/4" = 1'-0"

1

© COPYRIGHT 2021

JFE CONSTRUCTION INC.
1314 SW Market Street
Lee's Summit, MO 64081
v: 816.786.4008
jfeconstruction.com

VAN DEURZEN & ASSOCIATES, P.A.
11211 KING STREET, SUITE 130
OVERLAND PARK, KS 66210
(913) 451-6305 FAX (913) 451-1021
WEB PAGE: WWW.VANDEURZENASSOC.COM
E-MAIL: VDA@VANDEURZENASSOC.COM

Van Deurzen and Associates, P.A. © 2021

STATE OF MISSOURI
CHAD M. STREETER
NUMBER PE-2005010817
PROFESSIONAL ENGINEER
12/3/2021

THE GUNNISON MODERN

Spec Residence
2826 SW Hearthstone Place, Lee's Summit, MO
Lot 50 - Hook Farms Retreat

Project #:	8083-XXXX
	DATE:
Permit:	12/3/2021

Roof Plan

A104

RELEASE FOR CONSTRUCTION AS NOTED ON DAYS REVIEW
Development Services
LEE'S SUMMIT, MISSOURI

STRUCTURAL GENERAL NOTES

DIVISION 1 - GENERAL REQUIREMENTS

1. Design and construction work for this project shall conform to the requirements of the 2018 International Residential Code as amended by the City of Lee's Summit, MO
2. Furnish all labor, materials and equipment necessary to complete the work as shown or inferred by the drawings.
3. Design Loads:
   A. Elevated Floors:

Residential (Live Loads)	40 PSF
Sleeping rooms (Live Loads)	30 PSF
Floor Dead Load	15 PSF
Floor Joists Deflection (Total)	L/240
Floor Joist Deflection (Live)	L/360
Attic Storage (Live Loads)	10 PSF
Ceiling Dead Load	5 PSF
Ceiling Joists Deflection	L/240
B. Roof Live Load	20 PSF
C. Roof Snow Load:	
Ground Snow Load, pg	20 PSF
Flat Roof Snow Load, pf	20 PSF
Snow Exposure Factor, Ce	1.0
Snow Load Importance Factor, Is	1.0
Thermal Factor, Ct	1.0
D. Wind Load:	
Basic Wind Speed (Vult)	115 MPH
Risk Category	II
Exposure	B
Internal Pressure Coefficient	±0.18

4. The contractor shall examine actual job conditions and be responsible for verifying all dimensions and elevations shown on structural plans with those shown on architectural and mechanical drawings. If errors, omissions or discrepancies are found they shall be reported to the engineer before proceeding with the work.
5. Plans indicate size, location and general arrangement of construction. Dimensions lacking or not drawn to scale shall not be scaled but referred to the designer for interpretation.

DIVISION 2 - EARTHWORK

1. The contractor shall employ the services of a geotechnical engineer to observe, test and approve all excavation, fill and backfill work and to determine that subgrade conditions are compatible with those used in the design.
2. The minimum soil bearing capacity is 1500 PSF in accordance with Table 1804.2 of the International Building Code. All footings are designed to bear on natural undisturbed soil or controlled fill capable of adequately sustaining a maximum bearing pressure of 1500 PSF. If suitable bearing capacity is not encountered at the elevation indicated on the drawing, contractor shall notify the architect immediately.
3. All topsoil, organic material and existing structures shall be removed from building area and from areas to be paved. Stockpile all topsoil for reuse.
4. Controlled Fill Materials:
   A. Granular Fill - Granular fill shall consist of washed, evenly graded mixture of crushed stone, or crushed or uncrushed gravel, with 100 percent passing a 1 1/2 inch sieve and not more than 5 percent passing a no. 4 sieve.
   B. Shrinkage-Swell control fill - Shrinkage-swell controlled fill shall consist of material having a relatively low plasticity with a liquid limit of less than 45 percent and a plasticity index of less than 21 percent.
   C. Controlled Fill - Controlled fill shall be either granular or shrinkage-swell controlled fill as specified above and as approved by the geotechnical engineer.
5. Controlled fill shall consist of material having a relatively low plasticity with a liquid limit of less than 45 percent and a plasticity index of less than 21 percent.
6. Foundation Preparation:
   A. Proofroll site to identify soft or disturbed areas. If areas are found to be unsuitable for support of footings and/or slab-on-grade please contact the Engineer of Record.
   B. Backfill directly under slabs-on-grade with minimum of 4 inches of granular fill consisting of washed, evenly graded mixture of crushed stone, or crushed or uncrushed gravel, with 100 percent passing a 1 1/2 inch sieve and not more than 5 percent passing a no. 4 sieve.
7. Controlled Fill and Backfill Compaction:
   A. All controlled fill and backfill shall be placed in lifts having maximum loose lift thickness of 9 inches.
   B. Granular Fill - Compact granular fill below footing bearing elevation to a minimum of 98 percent of material's maximum dry density as determined by ASTM D 698 and to a minimum of 95 percent for material founded above footing bearing elevation.
   C. Shrinkage-swell controlled fill - Compact shrinkage-swell controlled fill below footing bearing elevation to minimum of 98/95 percent of the material's maximum dry density as determined by ASTM D 698 and to a minimum of 95 percent for material founded above footing bearing elevation.
   D. Controlled Fill - Compact controlled fill at a moisture content within a range of 0 to 4 percent above optimum moisture content.

DIVISION 3 - CONCRETE

1. All concrete work shall conform to the requirements of ACI 318 "Building Code Requirements for Reinforced Concrete" and ACI 301 "Specification for Structural Concrete Buildings."
2. Concrete materials shall comply with:
   A. Cement - ASTM C 150 Type I
   B. Aggregate - ASTM C 33, maximum aggregate size 3/4 inch
   C. Water - Potable
   D. Air-entraining admixture - ASTM C 260
   E. Water-reducing admixture - ASTM C 494, including superplasticizers.
   F. Fly ash - ASTM C 618, Class C
3. Concrete shall develop the following minimum 28 day design compressive strength (f'c):

Type of Construction	Compressive Strength(f'c)
A. Footings, walls and basement slab	3000 PSI
B. Garage Slab	3500 PSI
C. Exterior slabs, steps, and curbs (air-entrained concrete)	4000 PSI

   Concrete proportions shall be established on the basis of field experience and/or trial mixtures in accordance with ACI 318-89 Sections 5.2 and 5.3. When fly ash is utilized in the mix, mix shall contain a water-reducer. Fly ash shall be added at the rate of not more than 100 pounds per cubic yard and cement shall be reduced by not more than 15 percent by weight.
4. Proportion and design mixes to result in concrete slump at point of placement of not more than 4 inches, except grout for masonry of not more than 6 inches.
5. Use air-entraining admixture in exterior exposed concrete to result in concrete at point of placement having air content of 5 to 7 percent entrained air.
6. Reinforcing Steel:
   A. Reinforcing bars - ASTM A 615, grade 40, deformed.
   B. Welded wire fabric - ASTM A 1064, lap at least one full mesh and lace splices with wire.
   C. Supports for reinforcement - comply with CRSI recommendations.
7. Concrete Work Execution:
   A. Minimum concrete cover for reinforcement shall be, unless noted otherwise on the drawings:
      Cast against and exposed to earth---------- 3 inches
      Exposed to earth or weather---------- 2 inches
      Not exposed to earth or weather-------- 1 1/2 inches
   B. All concrete is reinforced, reinforce concrete not otherwise indicated with same reinforcement as similar sections.
   C. Protect concrete work from physical damage or reduced strength due to weather extremes:
      In cold weather comply with ACI 306
      In hot weather comply with ACI 305
   D. In corners of grade beams and walls provide corner reinforcement. Lap two feet each direction in outside face, matching size and spacing of horizontal reinforcement.
   E. At openings in walls, add one #4 bar (opening dimension plus 60 bar diameters) each face, each corner of opening.
   F. Provide one #4 bar diagonally at each face of all steps in grade beams and foundation walls.
   G. Provide construction joints in footings, grade beams and walls at not greater than 80 feet in any direction, key and dowel construction joints.
   H. Provide control joints in slabs-on-grade at not greater than 20 feet on center in each direction. Saw cut control joints minimum 1/4 of slab depth, as soon after slab finishing as possible without dislodging aggregate.
8. Coordinate concrete work with architectural and mechanical drawings for concrete finishes, recessed areas, embedded items and other conditions.

DIVISION 5.5 - MISCELLANEOUS STRUCTURAL STEEL

1. All miscellaneous structural steel work shall conform to the requirements of AISC "Specifications for Design, Fabrication, and Erection of Structural Steel for Buildings".
2. Miscellaneous structural steel material shall comply with:
   A. Structural Steel - ASTM A 36
   B. Cold-formed Steel Tubing - ASTM A 500 Grade B.
   C. Anchor Rods - ASTM F-1554, non-headed type unless otherwise noted.

DIVISION 6 - ROUGH CARPENTRY

1. All rough carpentry work shall conform to the requirements of NFoPA "National Design Specification of Wood Construction"; TPI "Design Specifications for Light Metal Plate Connected Wood Trusses"; APA "Plywood Design Specifications"; DOC PS 1 "Product Standard for Construction and Industrial Plywood"; DOC PS 56 "Structural Glued Laminated Timber" and Chapter 23 of the International Building Code.
2. Rough carpentry materials shall comply with:
   A. Lumber - S4S, surface dry, grade marked, complying with PS 20; graded under WWPA or SPIB rules:

Studs:	Stud Grade - Spruce-Pine-Fir
Joist:	No. 2 Douglas Fir/ No. 2 Hem Fir
Header:	No. 2 Douglas Fir
Rafter:	No. 3 Douglas Fir/ No. 2 Spruce-Pine-Fir
Plates:	No. 3 Spruce-Pine-Fir
Blocking:	No. 3 Spruce-Pine-Fir

   B. Metal framing fasteners - ASTM A 153, hot-dip galvanized fasteners; equal to Simpson strong-tie connectors complying with ICBO No. 1258.
   C. Plywood - APA rated sheathing, complying to PS 1.
   D. LVL - Laminated veneer lumber shall be grade 2800 F-2.0E and shall meet the requirements of NER-442, NER-472 or ER-4321.
   E. I Joist - I joist shall be fabricated from APA rated sheathing board webs, LVL flanges, utilizing waterproof type glue and shall meet requirements of NER-450, NER-446, NER-476 or ICBO PFC-3754.
   F. Glulam Beams - Combination 20F-V3 in accordance with Table No. 25-C-1 Part A of Chapter 23 of the International Building Code.
   G. Fiberboard Sheathing - DOC Standard PS 57-73.
   H. Gypsum Sheathing Board - ASTM C 79 and UBC Standard No. 47-10.
   I. Gypsum Wallboard - ASTM C 36 and UBC Standard No. 47-11.
3. Roof sheathing for standard asphalt roofing shall be 1/2 inch APA rated sheathing 24/0 exterior glued and clipped. Roof sheathing for Conc Tile shall be 5/8 in APA rated 32/16 exterior glued and clipped. Lay sheathing with face grain perpendicular to support members and stagger end joints 4'-0". FASTEN PER SCHEDULE BELOW.
4. Floor sheathing shall be 3/4 inch APA rated sheathing 48/24 exterior glued. Lay sheathing with face grain perpendicular to support members and stagger end joints 4'-0". FASTEN PER SCHEDULE BELOW.
5. Exterior wall sheathing shall be 1/2 inch APA Rated sheathing 24/0 or 7/16 inch LP Smart Siding exterior glued. Provide solid blocking at all unsupported panel edges.FASTEN PER SCHEDULE BELOW. For LP Siding, fasten through both panels at edge supports.
6. Interior shear wall sheathing where noted shall be 1/2 inch gypsum wallboard. FASTEN PER SCHEDULE BELOW.
7. Attach metal framing fasteners to framing members with minimum number and size of nails listed in ICBO Report No. 1258.
8. Provide full depth solid blocking, 1 X 4 cross bracing, or 16 gage metal cross bracing bridging at ends of members and at 8'-0" intervals along members.

ITEM	DESCRIPTION OF BUILDING ELEMENTS	NUMBER AND TYPE OF FASTENER[a, b, c]		SPACING AND LOCATION
		COMMON NAIL	PNEUMATIC NAIL	
	ROOF			
1	Blocking between ceiling joists or rafters to top plate	(4) 8d box (3) 8d common (3) 10d box	(4) 2 1/2" × 0.113" (3) 2 1/2" × 0.131" (3) 3" × 0.128" (3) 3" × 0.131"	Toe nail
2	Ceiling joists to top plate	(4) 8d box (3) 8d common (3) 10d box	(4) 2 1/2" × 0.113" (3) 2 1/2" × 0.131" (3) 3" × 0.128" (3) 3" × 0.131"	Per joist, toe nail
3	Ceiling joist not attached to parallel rafter, laps over partitions	(4) 10d box (3) 16d common	(4) 3" × 0.128" (3) 3 1/2" × 0.162" (4) 3" × 0.131"	Face nail
4	Ceiling joist attached to parallel rafter (heel joint) Note: Fasteners listed IRC Table R802.5.2 assuming 16"c Rafters / Joists & spans less than 12'-0"	(3) 16d common @ slopes greater than 4:12 (5) 16d common @ slopes 4:12 or less	(3) 3 1/2" × 0.162" @ slope > 4:12 (5) 3 1/2" × 0.162" @ slope 4:12 or less	Face nail
5	Collar tie to rafter, face nail or 11/4" × 20ga. ridge strap to rafter	(4) 10d box (3) 10d common	(4) 3" × 0.128" (3) 3" × 0.148" (4) 3" × 0.131"	Face nail each rafter
6	Rafter or roof truss to plate	(3) 16d box (3) 10d common (4) 10d box	(3) 3 1/2" × 0.135" (3) 3" × 0.148" (4) 3" × 0.128" (4) 3" × 0.131"	2 toe nails on one side and 1 toe nail on opposite side of each rafter or trussi
7	Roof rafters to ridge, valley or hip rafters or roof rafter to minimum 2" ridge beam	(4) 16d (3) 10d common (4) 10d box	(4) 3 1/2" × 0.135" (3) 3 1/2" × 0.148" (4) 3" × 0.128" (4) 3" × 0.131"	Toe nail
		(3) 16d box (2) 16d common (3) 10d box	(3) 3 1/2" × 0.135" (2) 3 1/2" × 0.162" (3) 3" × 0.128" (3) 3" × 0.131"	End nail
	WALL			
8	Stud to stud (not at braced wall panels)	16d common 10d box	3 1/2" × 0.162" 3" × 0.128" 3" × 0.131"	24"c face nail 16"c face nail
9	Stud to stud and abutting studs at intersecting wall corners (at braced wall panels)	16d box 16d common	3 1/2" × 0.135" 3" × 0.131" 3 1/2" × 0.162"	**18"c face nail**
10	Built-up header (2" to 2" header with 1/2" spacer)	16d common 16d box	3 1/2" × 0.162" 3 1/2" × 0.135"	16"c each edge face nail 12"c each edge face nail
11	Continuous header to stud	(5) 8d box (4) 8d common (4) 10d box	(5) 2 1/2" × 0.113" (4) 2 1/2" × 0.131" (4) 3" × 0.128"	Toe nail
12	Top plate to top plate	16d common 10d box	3 1/2" × 0.162" 3" × 0.128" 3" × 0.131"	16"c face nail 12"c face nail
13	Double top plate splice for SDCs A-D2 with seismic braced wall line spacing < 25'	(8) 16d common (12) 16d box (12) 10d box	(8) 3 1/2" × 0.162" (12) 3 1/2" × 0.135" (12) 3" × 0.128" (12) 3" × 0.131"	Face nail on each side of end joint (minimum 24" lap splice length each side of end joint)
	Double top plate splice SDCs D0, D1, or D2; and braced wallline spacing ≥25'	(12) 16d	(12) 3 1/2" × 0.135"	
14	Bottom plate to joist, rim joist, band joist or blocking (not at braced wall panels)	16d common 16d box	3 1/2" × 0.162" 3 1/2" × 0.135" 3" × 0.131"	16"c face nail 12"c face nail
15	Bottom plate to joist, rim joist, band joist or blocking (at braced wall panel)	(3) 16d box (2) 16d common	(3) 3 1/2" × 0.135" (2) 3 1/2" × 0.162" (4) 3" × 0.131"	3 each 16"c face nail 2 each 16"c face nail 4 each 16"c face nail
16	Top or bottom plate to stud	(4) 8d box (3) 16d box (4) 8d common (4) 10d box	(4) 2 1/2" × 0.113" (3) 3 1/2" × 0.135" (4) 2 1/2" × 0.131" (4) 3" × 0.128" (4) 3" × 0.131"	Toe nail
		(3) 16d box (2) 16d common (3) 10d box	(3) 3 1/2" × 0.135" (2) 3 1/2" × 0.162" (3) 3" × 0.128" (3) 3" × 0.131"	End nail
17	Top plates, laps at corners and intersections	(3) 10d box (2) 16d common	(3) 3" × 0.128" (2) 3 1/2" × 0.162" (3) 3" × 0.131"	Face nail
18	1" brace to each stud and plate	(3) 8d box (2) 8d common (2) 10d box (2) Staples[h]	(3) 2 1/2" × 0.113" (2) 2 1/2" × 0.131" (2) 3" × 0.128"	Face nail
19	1" × 6" sheathing to each bearing	(3) 8d box (2) 8d common (2) 10d box (2) Staples[h]	(3) 2 1/2" × 0.113" (2) 2 1/2" × 0.131" (2) 3" × 0.128"	Face nail
20	1" × 8" and wider sheathing to each bearing	(3) 8d box (3) 8d common (3) 10d box (3) Staples[h]	(3) 2 1/2" × 0.113" (3) 2 1/2" × 0.131" (3) 3" × 0.128"	Face nail
	Wider than 1" × 8"	(4) 8d box (3) 8d common (3) 10d box (4) Staples[h]	(4) 2 1/2" × 0.113" (3) 2 1/2" × 0.131" (3) 3" × 0.128"	

ITEM	DESCRIPTION OF BUILDING ELEMENTS	NUMBER AND TYPE OF FASTENER[a, b, c]		SPACING AND LOCATION
		COMMON NAIL	PNEUMATIC NAIL	
	FLOOR			
21	Joist to sill, top plate or girder	(4) 8d box (3) 8d common (3) 10d box	(4) 2 1/2" × 0.113" (3) 2 1/2" × 0.131" (3) 3" × 0.128" (3) 3" × 0.131"	Toe nail
22	Rim joist, band joist or blocking to sill or top plate (roof applications also)	8d box 8d common 10d box	2 1/2" × 0.113" 2 1/2" × 0.131" 3" × 0.128" 3" × 0.131"	4"c toe nail 6"c toe nail
23	1" × 6" subfloor or less to each joist	(3) 8d box (2) 8d common (3) 10d box (2) Staples[h]	(3) 2 1/2" × 0.113" (2) 2 1/2" × 0.131" (3) 3" × 0.128"	Face nail
24	2" subfloor to joist or girder	(3) 16d box (2) 16d common	(3) 3 1/2" × 0.135" (2) 3 1/2" × 0.162"	Blind and face nail
25	2" planks (plank & beam–floor & roof)	(3) 16d box (2) 16d common	(3) 3 1/2" × 0.135" (2) 3 1/2" × 0.162"	At each bearing, face nail
26	Band or rim joist to joist	(3) 16d common (4) 10 box (4) 3" × 14 ga. staples, 7/16" crown	(3) 3 1/2" × 0.162" (4) 3" × 0.128" (4) 3" × 0.131"	End nail
27	Built-up girders and beams, (2) inch lumber layers	20d common	4" × 0.192"	Nail each layer as follows: 32"c at top and bottom and staggered.
		10d box	3" × 0.128" 3" × 0.131"	24"c face nail at top and bottom staggered on opposite sides
		(2) 20d common (3) 10d box	(2) 4" × 0.192" (3) 3" × 0.128" (3) 3" × 0.131"	Face nail at ends and at each splice
28	Ledger strip supporting joists or rafters	(4) 16d box (3) 16d common (4) 10d box	(4) 3 1/2" × 0.135" (3) 3 1/2" × 0.162" (4) 3" × 0.128" (4) 3" × 0.131"	At each joist or rafter, face nail
29	Bridging to joist	(2) 10d	(2) 3" × 0.128"	Ea end, toe nail

ITEM	DESCRIPTION OF BUILDING ELEMENTS	NUMBER AND TYPE OF FASTENER[a, b, c]		SPACING AND LOCATION	
		COMMON NAIL	PNEUMATIC NAIL	Edges (inches)[f]	Intermediate (inches)[f, g]
	WOOD STRUCTURAL PANELS, SUBFLOOR, ROOF AND INTERIOR WALL SHEATHING TO FRAMING AND PARTICLEBOARD WALL SHEATHING TO FRAMING				
30	3/8" – 1/2"	6D common 8d common (roof)	2" × 0.113" 2 1/2" × 0.131"	6	12f
31	19/32" – 1"	8d common	2 1/2" × 0.131"	6	12f
32	1 1/8" – 1 1/4"	10d common 8d deformed nail	3" × 0.148" 2 1/2" × 0.131"	6	12
	OTHER WALL SHEATHING				
33	1/2" structural cellulosic fiberboard sheathing	1 1/2" galv. roofing nail, 7/16" head dia., or 1" crown staple 16 ga., 1 1/4" long		3	6
34	25/32" structural cellulosic fiberboard sheathing	1 3/4" galv. roofing nail, 7/16" head dia., or 1" crown staple 16 ga., 1 1/4" long		3	6
35	1/2" gypsum sheathing[d]	1 1/2" galv. roofing nail; staple galv., 1 1/2" long; 11/4" screws, Type W or S		7	7
36	5/8" gypsum sheathing[d]	1 3/4" galv. roofing nail; staple galv., 1 5/8" long; 1 5/8" screws, Type W or S		7	7
	WOOD STRUCTURAL PANELS, COMBINATION SUBFLOOR UNDERLAYMENT TO FRAMING				
37	3/4" and less	6d deformed 8d common	2" × 0.120" 2 1/2" × 0.131"	6	12
38	7/8" – 1"	8d common 8d deformed	2 1/2" × 0.131" 2 1/2" × 0.120"	6	12
39	1 1/8" – 1 1/4"	10d common 8d deformed	3" × 0.148" 2 1/2" × 0.120"	6	12

a. Nails are smooth-common, box or deformed shanks except where otherwise stated. Nails used for framing and sheathing connections shall have minimum average bending yield strengths as shown: 80 ksi for shank diameter of 0.192 inch (20d common nail), 90 ksi for shank diameters larger than 0.142 inch but not larger than 0.177 inch, and 100 ksi for shank diameters of 0.142 inch or less.
b. Staples are 16 gage wire and have a minimum 7/16-inch on diameter crown width.
c. Nails shall be spaced at not more than 6 inches on center at all supports where spans are 48 inches or greater.
d. Four-foot by 8-foot or 4-foot by 8-foot panels shall be applied vertically.
e. Spacing of fasteners not included in this table shall be based on Table R602.3(2).
f. Where panels are applied on both faces of a wall and spacing of fasteners on exterior wall sheathing wood structural panel roof sheathing to gable end wall framing shall be spaced 6 inches on center. Where the ultimate design wind speed is greater than 130 mph, nails for attaching panel roof sheathing to intermediate supports shall be spaced 6 inches on center for minimum 48-inch distance from ridges, eaves and gable end walls; and 4 inches on center to gable end wall framing.
g. Gypsum sheathing shall conform to ASTM C 1396 and shall be installed in accordance with GA 253. Fiberboard sheathing shall conform to ASTM C 208.
h. Spacing of fasteners on floor sheathing panel edges applies to panel edges supported by framing members and required blocking and at floor perimeters only. Spacing of fasteners on roof sheathing panel edges applies to panel edges supported by framing members and required blocking. Blocking of roof or floor sheathing panel edges perpendicular to the framing members need not be provided except as required by other provisions of this code. Floor perimeter shall be supported by framing members or solid blocking.
i. Where a rafter is fastened to an adjacent parallel ceiling joist in accordance with this schedule, provide two toe nails on one side of the rafter and toe nails from the ceiling joist to top plate in accordance with this schedule. The toe nail on the opposite side of the rafter shall not be required.
k. Staples to be 1" crown, 16ga, 1 3/4" long

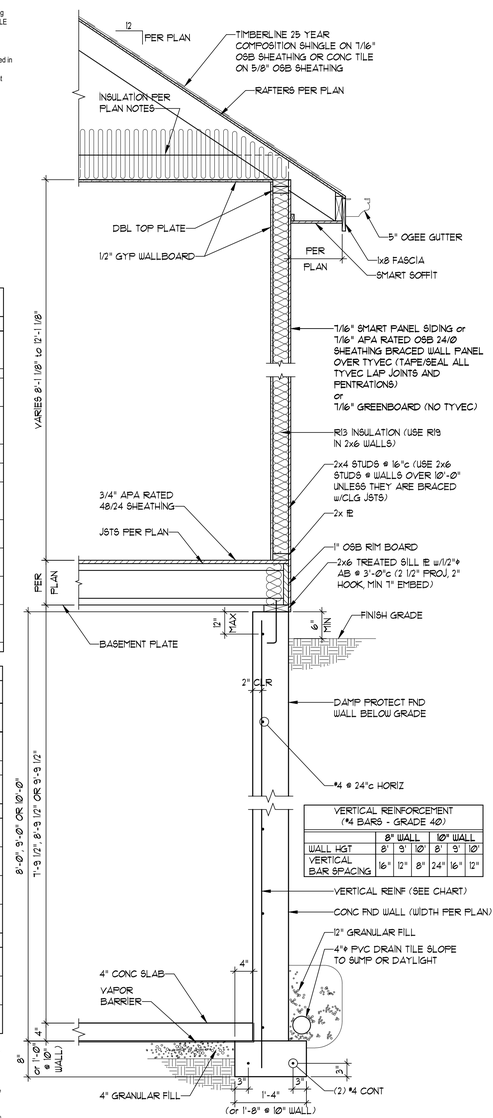

VERTICAL REINFORCEMENT (#4 BARS - GRADE 40)					
	8" WALL			Ø" WALL	
WALL HGT	8'	9'	Ø	8'	9'	Ø'
VERTICAL BAR SPACING	16"	12"	8"	24"	16"	12"

TYPICAL WALL SECTION
SCALE: 3/4" = 1'-0"

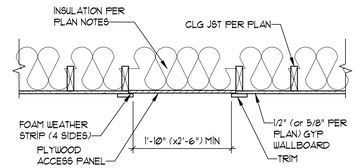

ATTIC ACCESS HATCH
SCALE: 3/4" = 1'-0"

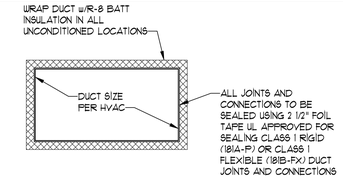

DUCT INSTALLATION
NOT TO SCALE

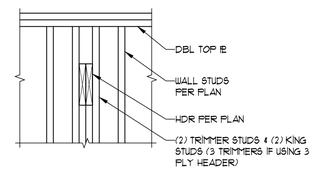

WOOD HEADER TO WALL CONNECTION
SCALE: 3/4" = 1'-0"

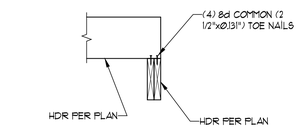

UPSET HEADER TO HEADER CONNECTION (UPSET HDR TO WALL SIM)
SCALE: 3/4" = 1'-0"

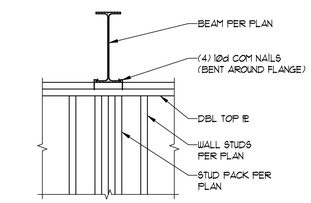

UPSET STEEL BEAM TO WALL CONN.
SCALE: 3/4" = 1'-0"

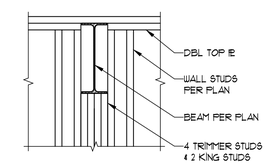

STEEL BEAM TO WALL CONNECTION
SCALE: 3/4" = 1'-0"

HANGER SCHEDULE			
SOLID SAWN LUMBER		ENGINEERED LUMBER	
HDR SIZE	HANGER	HDR SIZE	HANGER
2x6	LUS24	1 3/4x7 1/4	HU7
2x8	LUS26	1 3/4x9 1/4	HU9
2x10	LUS28	1 3/4x9 1/2	HU9
2x12	LUS210	1 3/4x11 7/8	HU11
(2) 2x6	LUS24-2	(2) 1 3/4x7 1/4	HU48
(2) 2x8	LUS26-2	(2) 1 3/4x9 1/4	HU410
(2) 2x10	LUS28-2	(2) 1 3/4x9 1/2	HU410
(2) 2x12	LUS210-2	(2) 1 3/4x11 7/8	HUS412

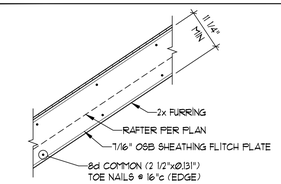

FURRING CONNECTION
SCALE: 3/4" = 1'-0"

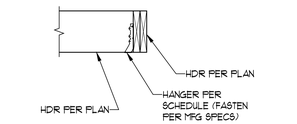

WOOD HEADER (or JST) TO HEADER CONNECTION
SCALE: 3/4" = 1'-0"

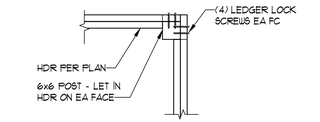

DECK ROOF AND/OR OPEN DECK HDR CONN
SCALE: 3/4" = 1'-0"

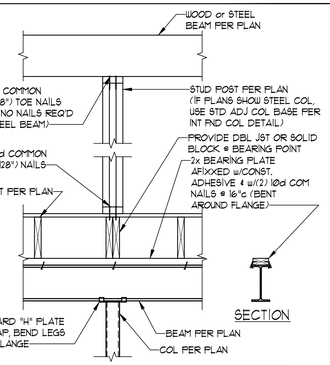

ERECTION NOTE: IF POST DOES NOT BEAR OVER BEAM, ALL DETAILS ARE THE SAME, POST TO BEAR ON DBL JOIST OR UPSET HEADER PER PLANS AND NOTES. (IF HEADER IS NOT CALLED OUT ON PLANS AS BEING REQUIRED, SOLID BLOCK UNDER POST BETWEEN JSTS)

STEEL POST CAP AND MISC POST CONN DETAILS
SCALE: 3/4" = 1'-0"

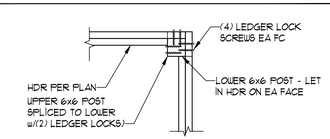

COVERED DECK POST CONN SPLIT POST OPTION
SCALE: 3/4" = 1'-0"

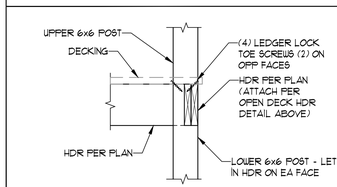

COVERED DECK POST CONN STACKED POST OPTION
SCALE: 3/4" = 1'-0"

JFE Construction
A JEFFRIES COMPANY
HANDCRAFTED HOMES

© COPYRIGHT 2021

JFE CONSTRUCTION INC.
1314 SW Market Street
Lee's Summit, MO 64081
v: 816.786.4008
jfeconstruction.com

VAN DEURZEN & ASSOCIATES, P.A.
16011 KING STREET, SUITE 130
OVERLAND PARK, KS 66210
(913) 451-6305 FAX (913) 451-1021
WEB PAGE WWW.VANDEURZENASSOC.COM
E-MAIL VDA@VANDEURZENASSOC.COM

Van Deurzen and Associates, P.A. © 2021

STATE OF MISSOURI
CHAD M. STREETER
NUMBER PE-2005010817
PROFESSIONAL ENGINEER
12/3/2021

THE GUNNISON MODERN

Spec Residence
2826 SW Hearthstone Place, Lee's Summit, MO
Lot 50 - Hook Farms Retreat

Project #: 8083-XXXX
DATE:
Permit: 12/3/2021

Framing Notes and Details

S100

RELEASED FOR CONSTRUCTION
AS NOTED ON PLANS REVIEW
Development Services
LEE'S SUMMIT, MISSOURI

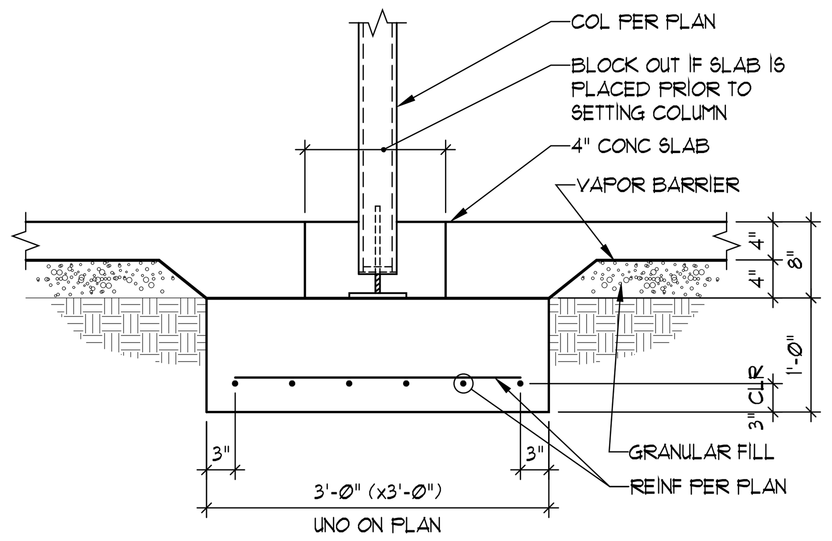

TYPICAL INTERIOR COLUMN
SCALE: 3/4" = 1'-0"

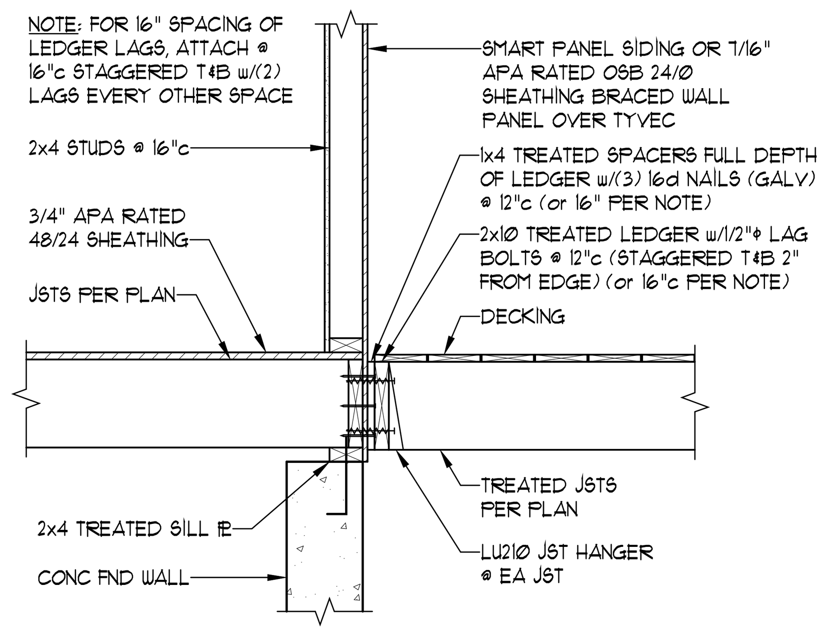

DECK ATTACHMENT
SCALE: 3/4" = 1'-0"

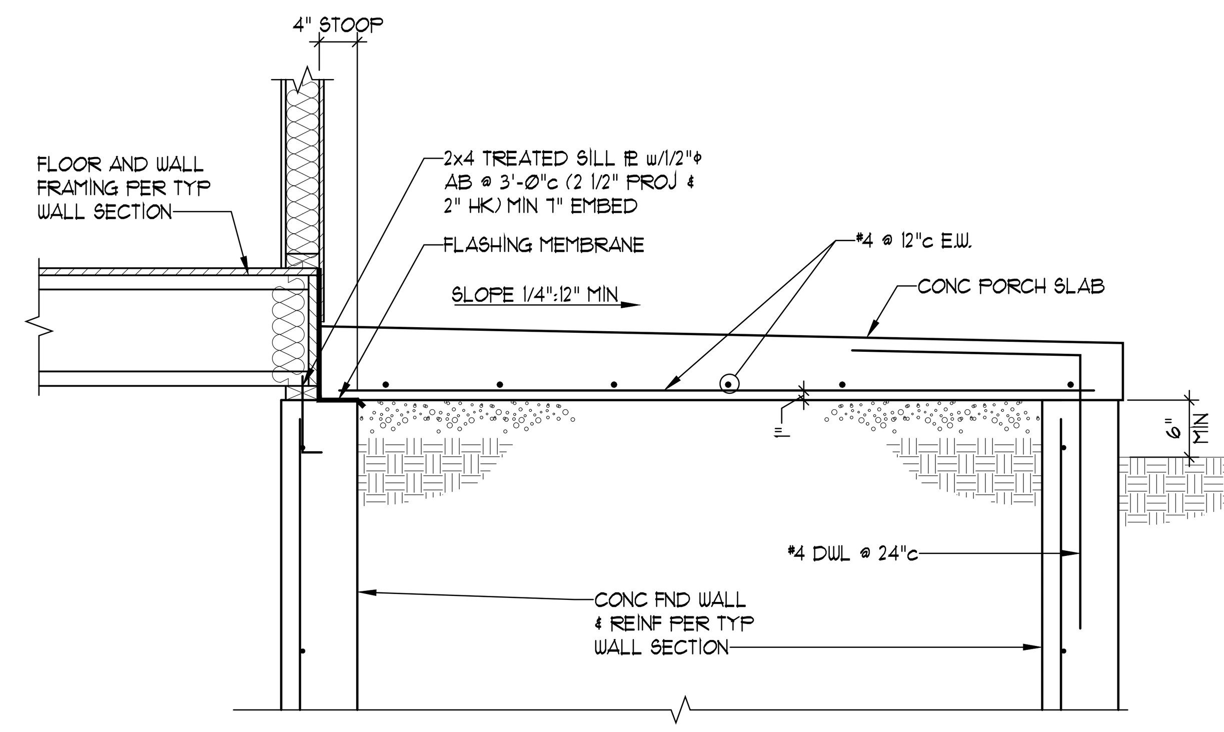

TYPICAL SECTION THRU PORCH
SCALE: 3/4" = 1'-0"

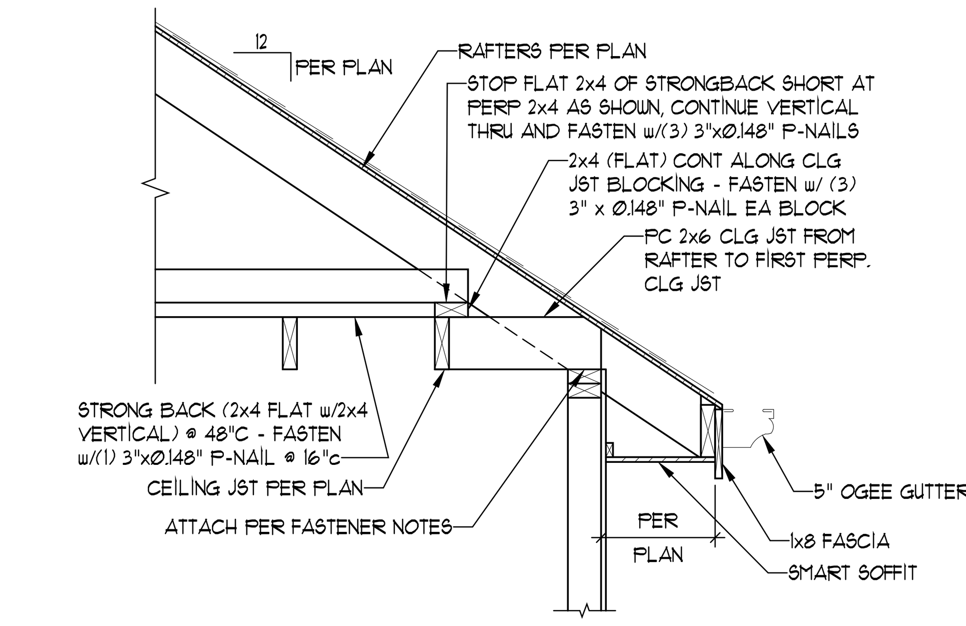

RAFTER ATTACHMENT AT PERPENDICULAR CONDITIONS
SCALE: 3/4" = 1'-0"

VERTICAL REINFORCEMENT (#4 BARS - GRADE 40)						
	8" WALL			10" WALL		
WALL HGT	8'	9'	10'	8'	9'	10'
VERTICAL BAR SPACING	16"	12"	8"	24"	16"	12"

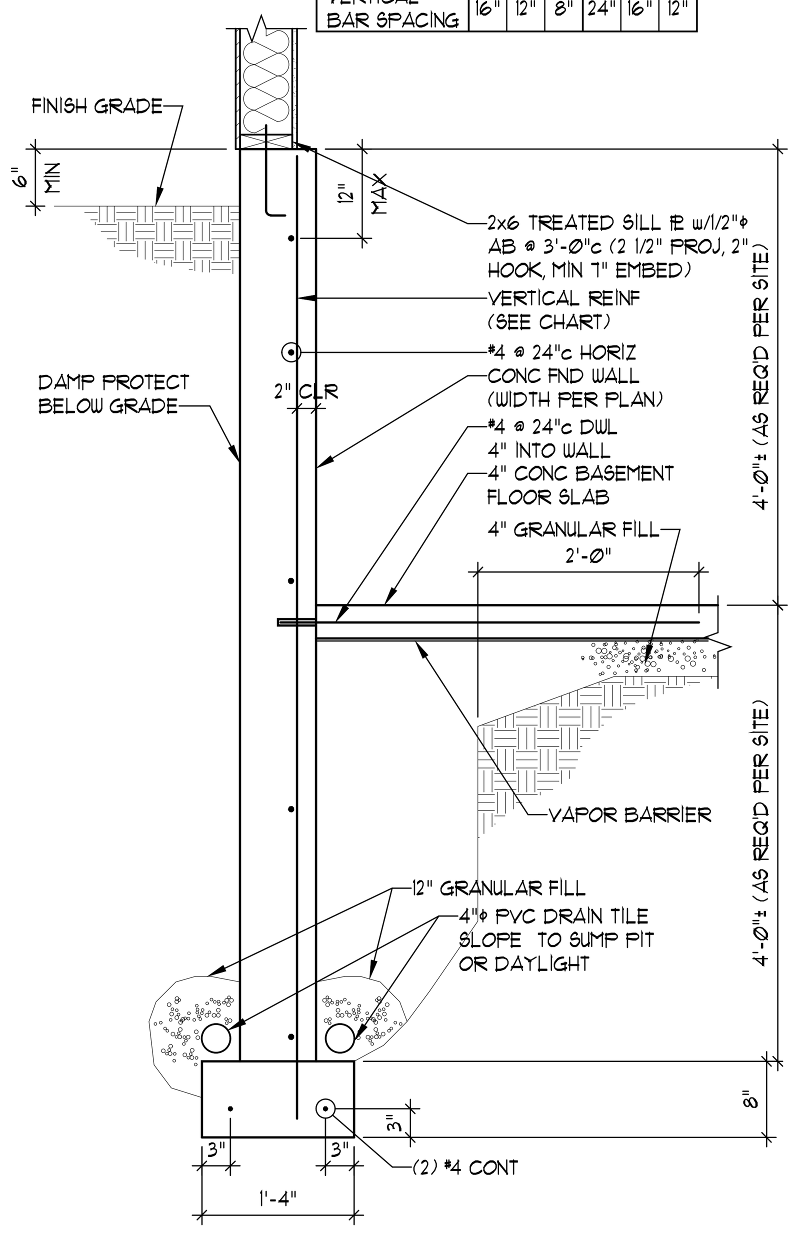

TYPICAL DAYLIGHT SECTION
SCALE: 3/4" = 1'-0"

VERTICAL REINFORCEMENT (#4 BARS - GRADE 40)						
	8" WALL			10" WALL		
WALL HGT	8'	9'	10'	8'	9'	10'
VERTICAL BAR SPACING	16"	12"	8"	24"	16"	12"

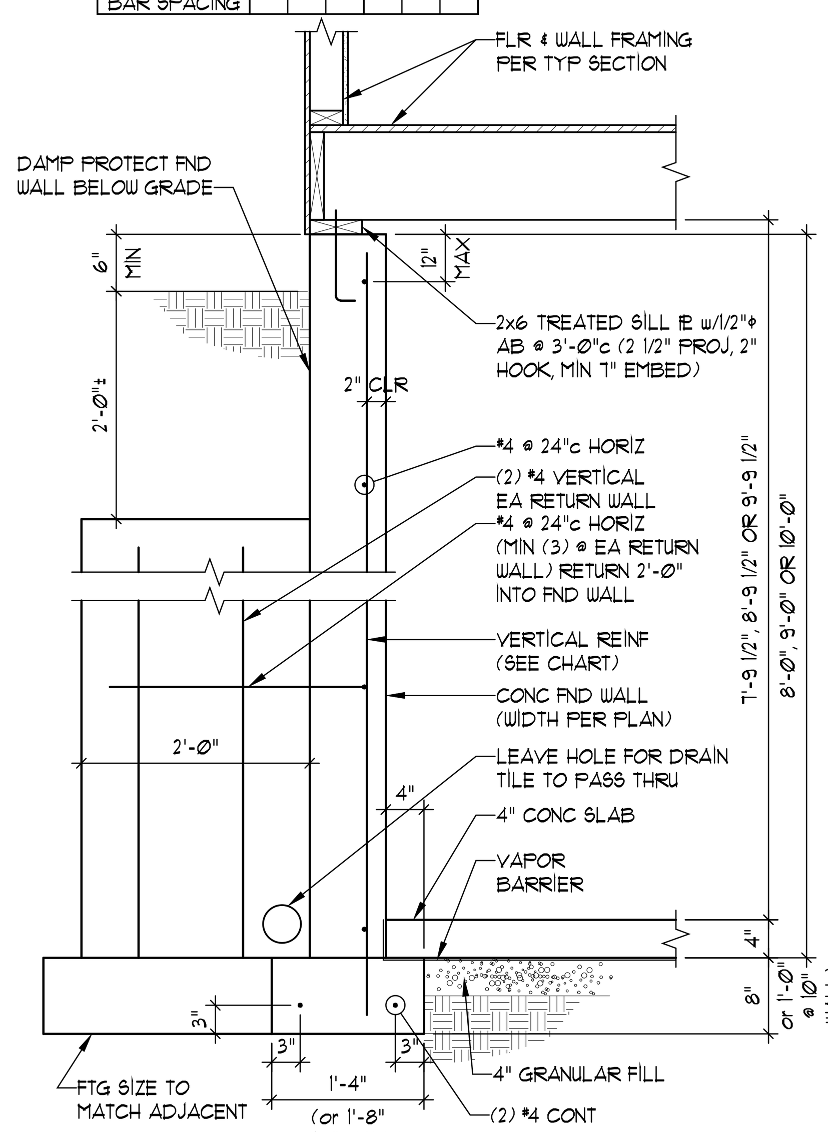

TYPICAL PILASTER SECTION
SCALE: 3/4" = 1'-0"

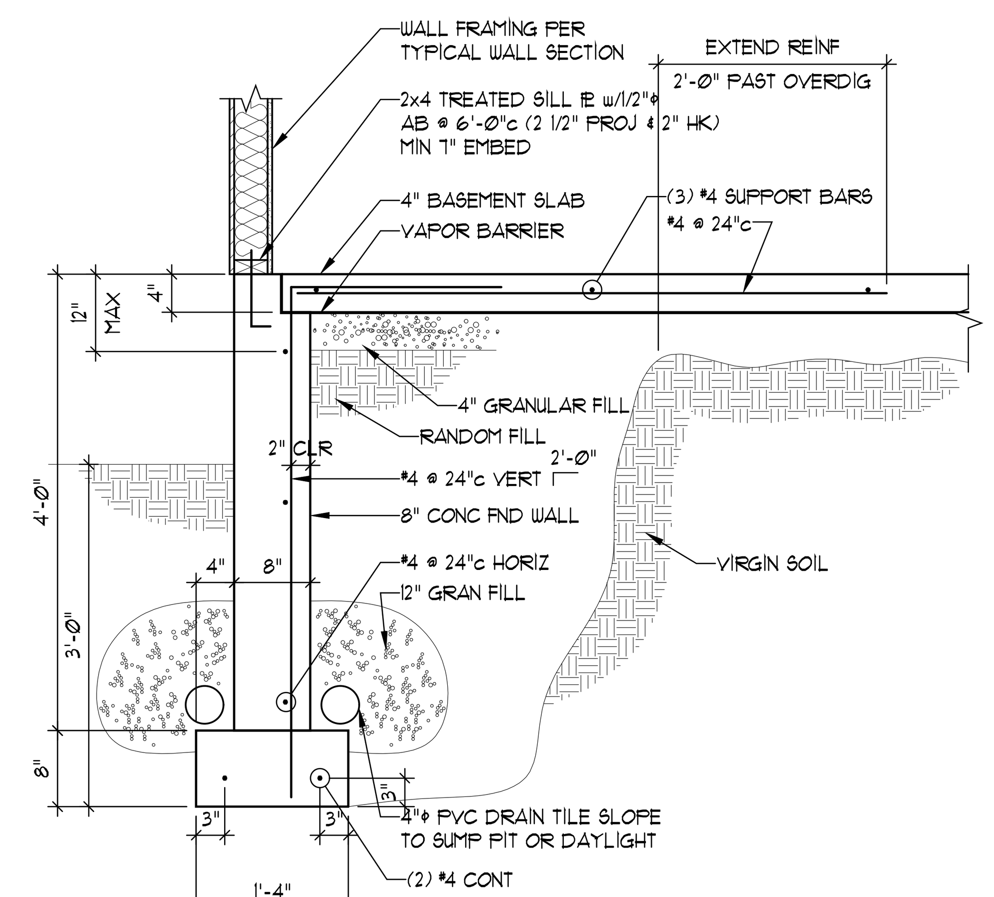

TYPICAL WALKOUT SECTION
SCALE: 3/4" = 1'-0"

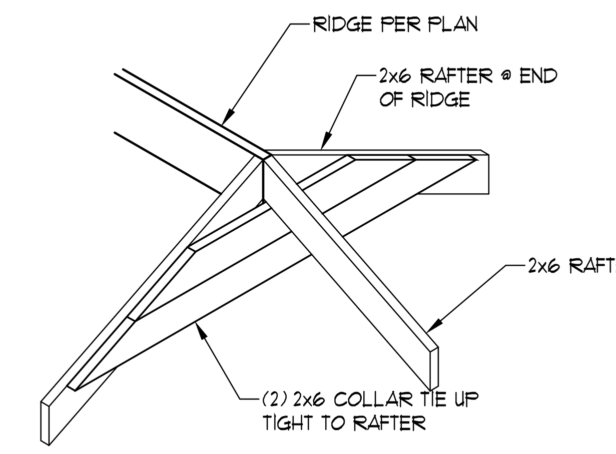

HIP RIDGE SUPPORT
SCALE: 1/2" = 1'-0"

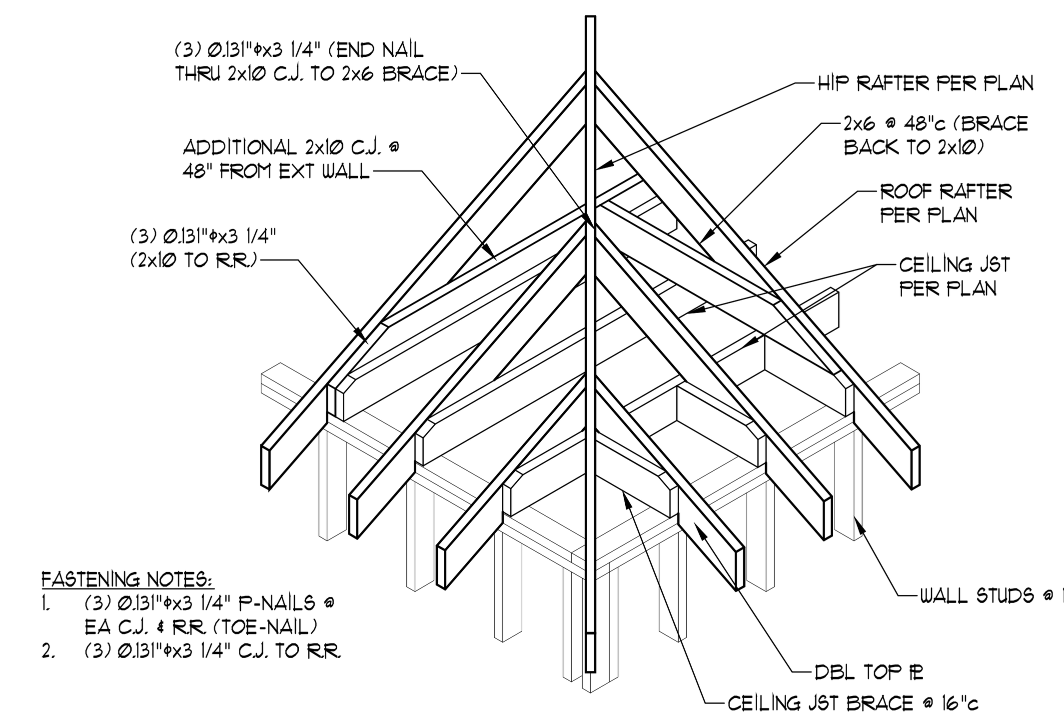

FASTENING NOTES:
1. (3) Ø.131"øx3 1/4" P-NAILS @ EA C.J. & R.R. (TOE-NAIL)
2. (3) Ø.131"øx3 1/4" C.J. TO R.R.

CEILING JOIST AND ROOF RAFTER CONNECTION @ HIP
SCALE: 1/2" = 1'-0"

VERTICAL REINFORCEMENT (#4 BARS - GRADE 40)						
	8" WALL			10" WALL		
WALL HGT	8'	9'	10'	8'	9'	10'
VERTICAL BAR SPACING	16"	12"	8"	24"	16"	12"

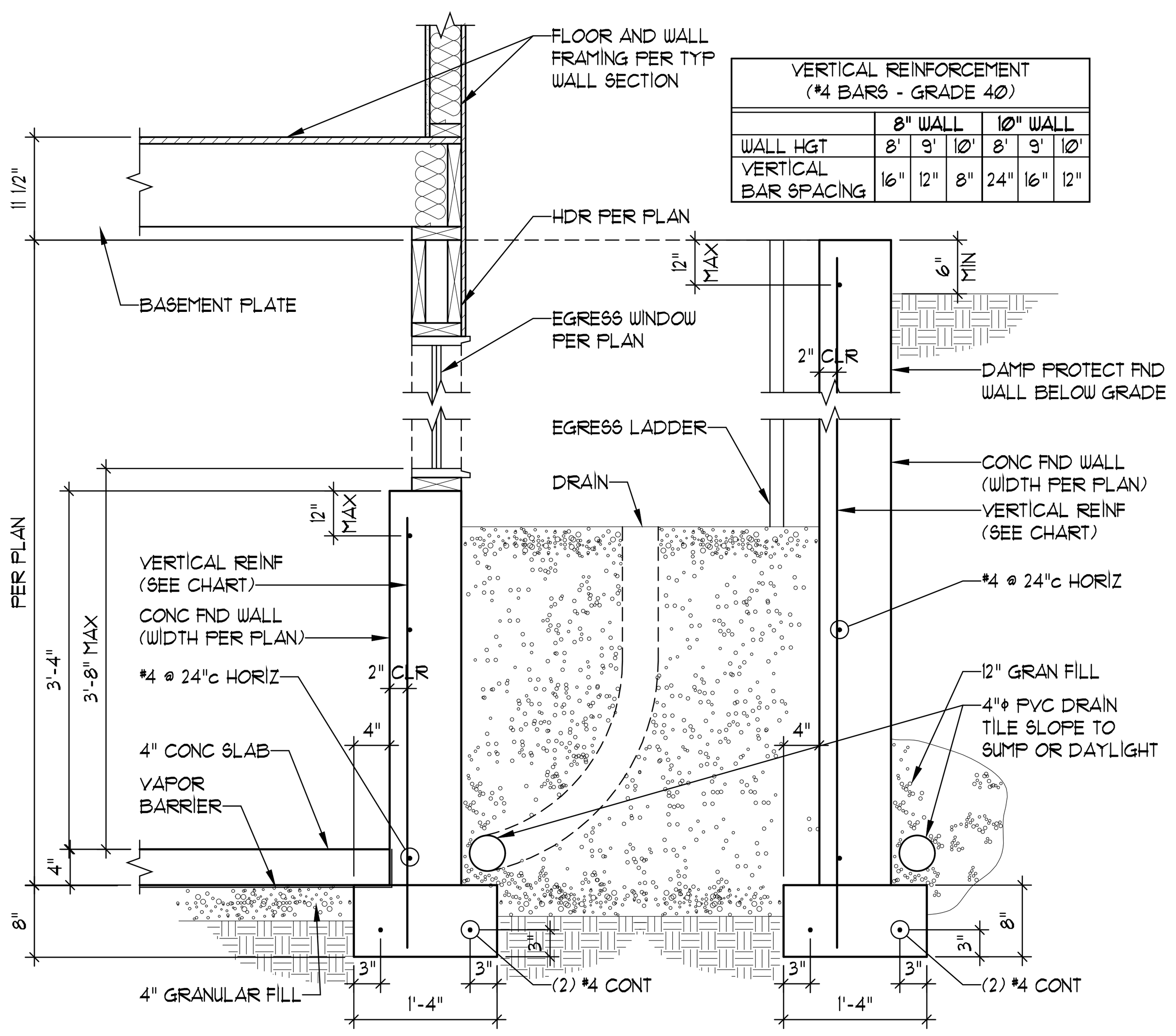

TYPICAL WINDOW WELL
SCALE: 3/4" = 1'-0"

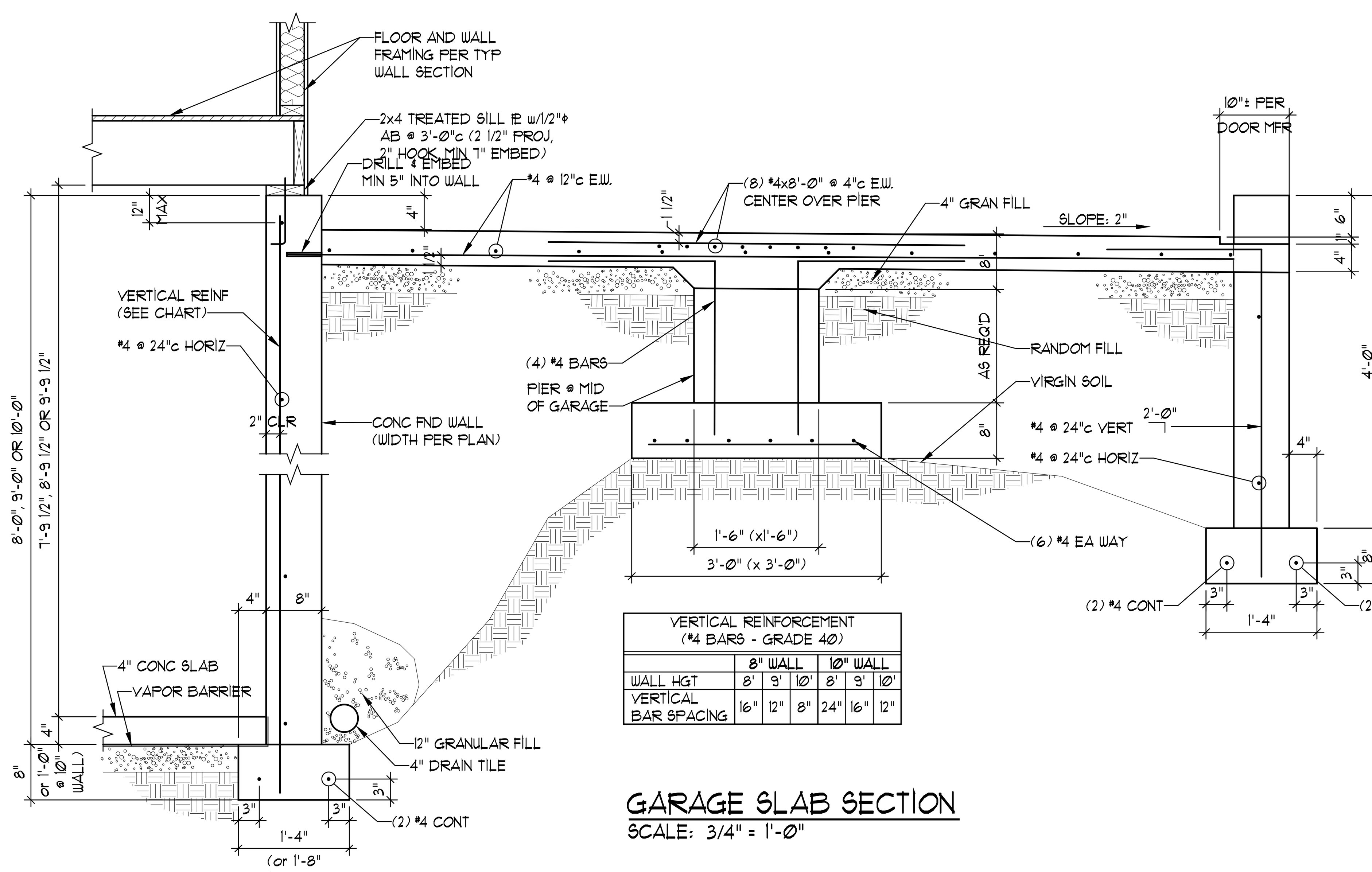

VERTICAL REINFORCEMENT (#4 BARS - GRADE 40)						
	8" WALL			10" WALL		
WALL HGT	8'	9'	10'	8'	9'	10'
VERTICAL BAR SPACING	16"	12"	8"	24"	16"	12"

GARAGE SLAB SECTION
SCALE: 3/4" = 1'-0"

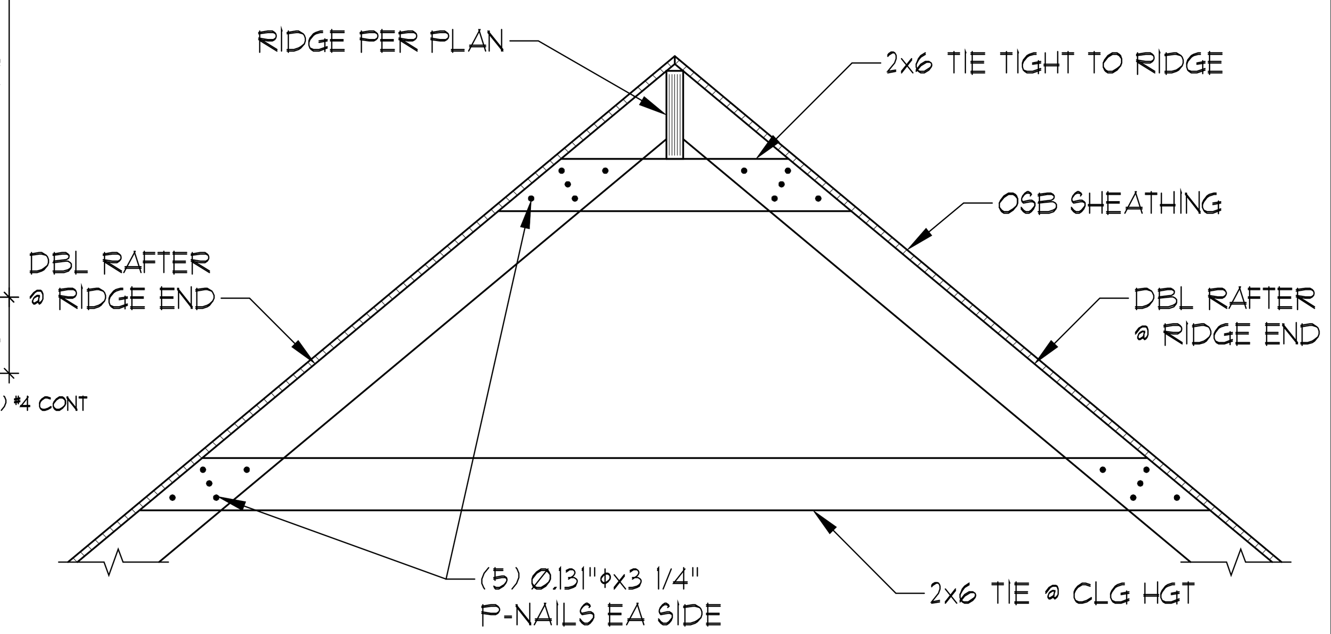

RIDGE SUPPORT DETAIL
SCALE: 1/2" = 1'-0"

JFE Construction — HANDCRAFTED HOMES, A JEFFRIES COMPANY

© COPYRIGHT 2021

JFE CONSTRUCTION INC.
1314 SW Market Street
Lee's Summit, MO 64081
v: 816.786.4008
jfeconstruction.com

VAN DEURZEN & ASSOCIATES, P.A.
11011 KING STREET, SUITE 130
OVERLAND PARK, KS 66210

Van Deurzen and Associates, P.A. © 2021

STATE OF MISSOURI — CHAD M. STREETER — NUMBER PE-2005010817 — PROFESSIONAL ENGINEER — 12/3/2021

THE GUNNISON MODERN
Spec Residence
2826 SW Hearthstone Place, Lee's Summit, MO
Lot 50 - Hook Farms Retreat

Project #: 8083-XXXX
DATE:
Permit: 12/3/2021

Framing Notes and Details

S101

RELEASE FOR CONSTRUCTION AS NOTED ON PLANS REVIEW — Development Services — LEE'S SUMMIT, MISSOURI

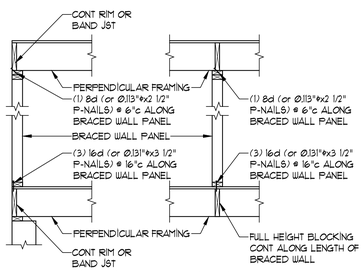

IRC FIGURE R602.10.8(1)
BRACED WALL PANEL CONNECTION WHEN PERPENDICULAR TO FLOOR/CEILING FRAMING

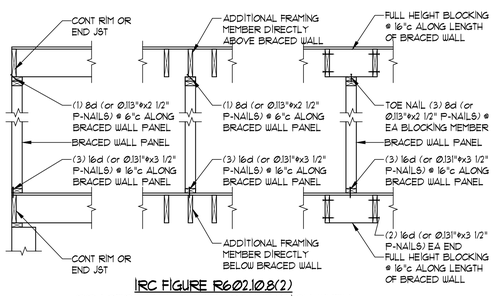

IRC FIGURE R602.10.8(2)
BRACED WALL PANEL CONNECTION WHEN PARALLEL TO FLOOR/CEILING FRAMING

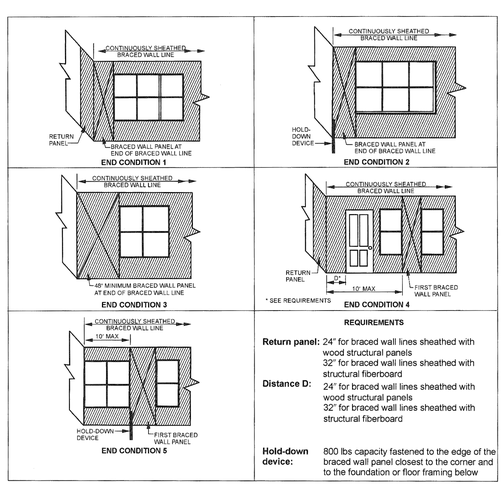

FIGURE R602.10.7
END CONDITIONS FOR BRACED WALL LINES WITH CONTINUOUS SHEATHING

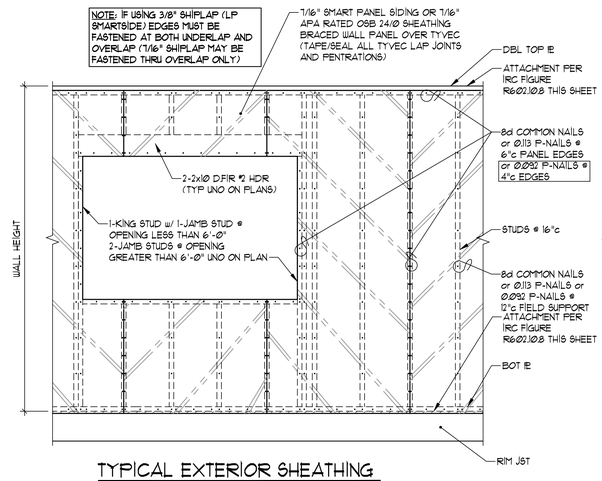

TYPICAL EXTERIOR SHEATHING INSTALLATION (METHOD WSP & CS-WSP)
SCALE: 1/2" = 1'-0"

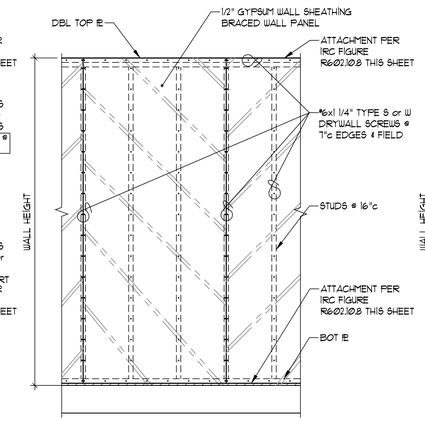

TYPICAL INTERIOR SHEATHING INSTALLATION (METHOD GB)
SCALE: 1/2" = 1'-0"

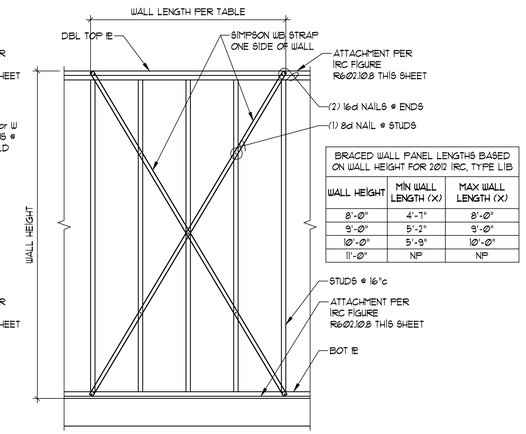

BRACED WALL PANEL LENGTHS BASED ON WALL HEIGHT FOR 2012 IRC, TYPE LIB		
WALL HEIGHT	MIN WALL LENGTH (X)	MAX WALL LENGTH (X)
8'-0"	4'-7"	8'-0"
9'-0"	5'-2"	9'-0"
10'-0"	5'-9"	10'-0"
11'-0"	NP	NP

INTERIOR SHEATHING INSTALLATION (METHOD LIB)
SCALE: 1/2" = 1'-0"

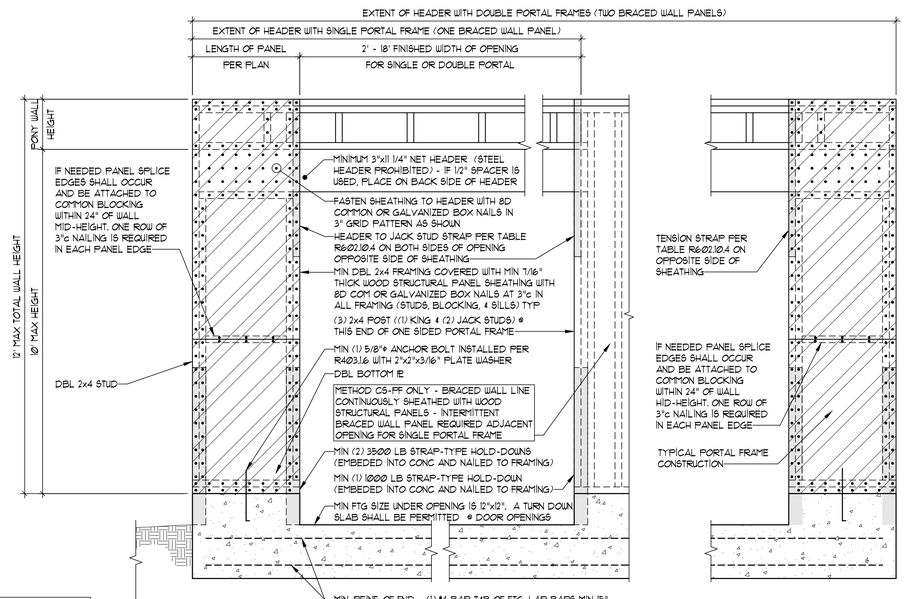

BRACED WALL METHOD "PFH" (also HEADER ATTACHMENT FOR CS-PF)
SCALE: 3/4"=1'-0"

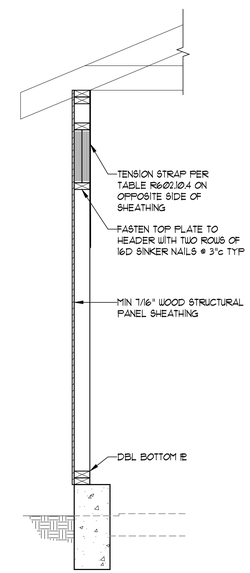

SECTION

TABLE 602.10.6.4 TENSION STRAP CAPACITY REQUIRE FOR RESISTING WIND PRESSURES PERPENDICULAR TO METHOD PFH, PFG, AND CS-PF BRACED WALL PANELS					
MINIMUM WALL STUD FRAMING NOMINAL SIZE AND GAGE	MAXIMUM PONY WALL HEIGHT (FEET)	MAXIMUM TOTAL WALL HEIGHT (FEET)	MAXIMUM OPENING WIDTH (FEET)	TENSION STRAP CAPACITY REQUIRED (LBS) FOR V_{ult} = 115mph	
				EXPOSURE B	EXPOSURE C
2x4 #2 GRADE	0	10	18	1,000	1,000
	1	10	9	1,000	1,000
			16	1,075	2,500
			18	1,275	2,850
	2	10	9	1,000	1,875
			16	2,775	4,125
			18	2,500	DESIGN
	2	12	9	1,500	3,175
			16	3,375	DESIGN
			18	3,975	DESIGN
	4	12	9	2,750	DESIGN
			12	3,775	DESIGN
2x6 STUD GRADE	2	12	9	1,000	2,075
			16	2,150	3,675
			18	2,550	DESIGN
	4	12	9	1,750	3,125
			16	2,400	DESIGN
			18	3,800	DESIGN

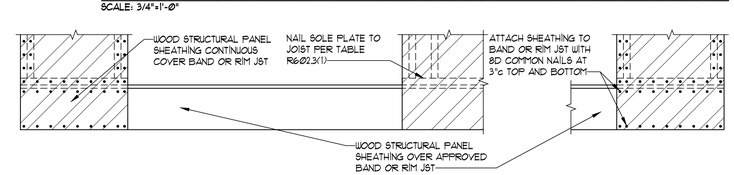

BRACED WALL METHOD "CS-PF" (ATTACHMENT TO WOOD FLOOR)
(REFER TO BRACED WALL METHOD "PFH" FOR HEADER ATTACH)
SCALE: 3/4"=1'-0"

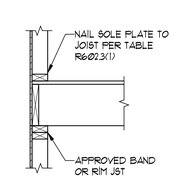

SECTION

JFE Construction
HANDCRAFTED HOMES
A JEFFRIES COMPANY

© COPYRIGHT 2021

JFE CONSTRUCTION INC.
1314 SW Market Street
Lee's Summit, MO 64081
v: 816.786.4008
jfeconstruction.com

VAN DEURZEN & ASSOCIATES, P.A.
16011 KING STREET,SUITE 130
OVERLAND PARK, KS 66210
(913) 451-6305 FAX (913) 451-1021
WEB PAGE WWW.VANDEURZENASSOC.COM
E-MAIL VDA@VANDEURZENASSOC.COM

Van Deurzen and Associates, P.A. © 2021

STATE OF MISSOURI
CHAD M. STREETER
NUMBER PE-2005010817
PROFESSIONAL ENGINEER
12/3/2021

THE GUNNISON MODERN

Spec Residence
2826 SW Hearthstone Place, Lee's Summit, MO
Lot 50 - Hook Farms Retreat

Project #: 8083-XXXX
DATE:
Permit: 12/3/2021

Framing Notes and Details

S102

RELEASE FOR CONSTRUCTION AS NOTED ON PLANS REVIEW
Development Services
LEE'S SUMMIT, MISSOURI