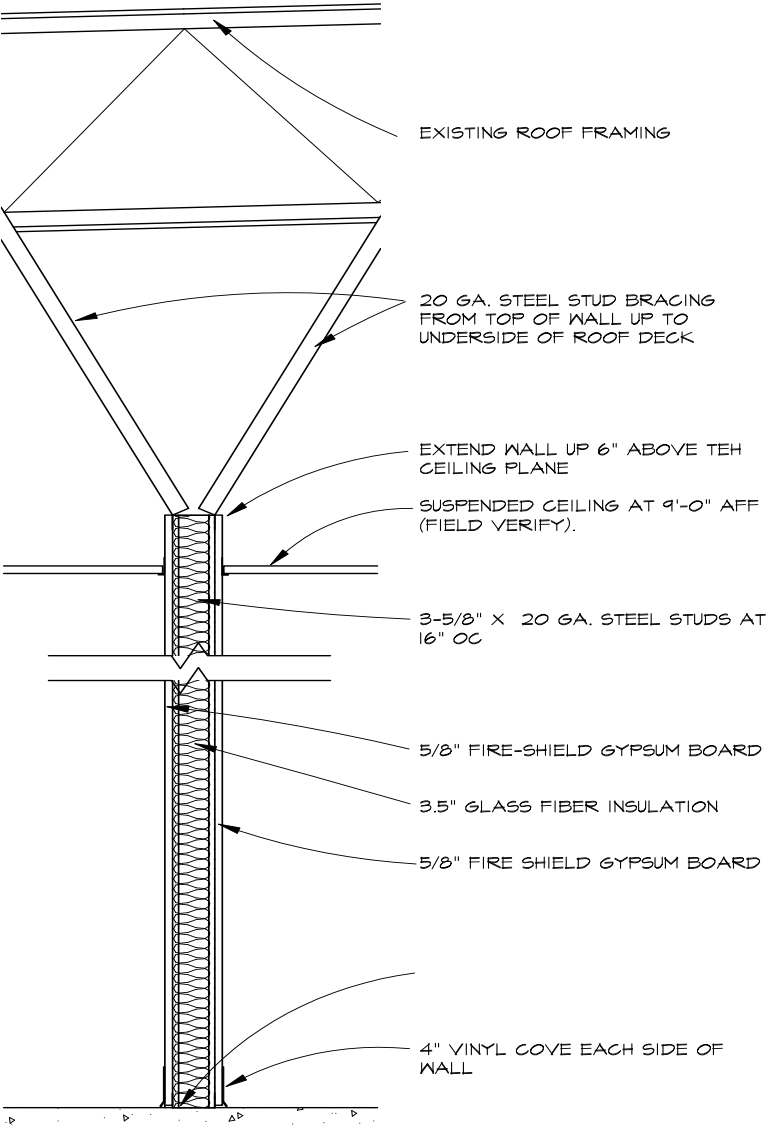

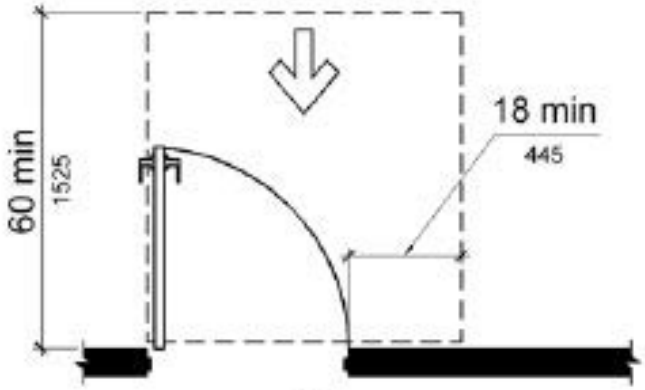

(a)
front approach, pull side

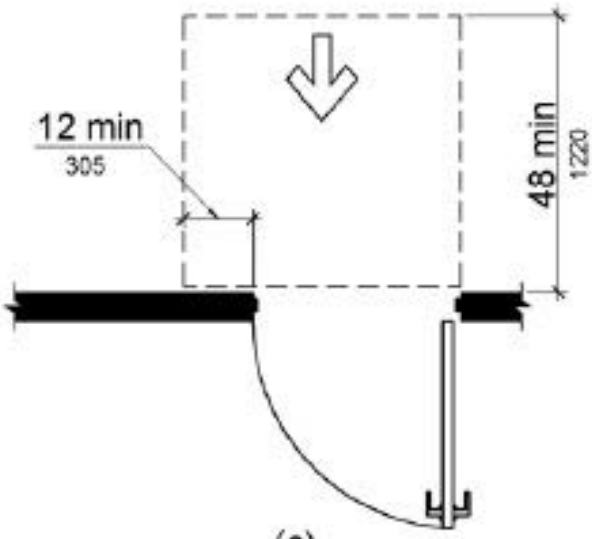

(c)
front approach, push side, door provided with both closer and latch