DISH Wireless L.L.C. SITE ID:

KCMCI00155B

DISH Wireless L.L.C. SITE ADDRESS:

1204 N.E. WOODS CHAPEL ROAD
LEES SUMMIT, MO 64064

RELEASED FOR CONSTRUCTION
As Noted on Plans Review

Development Services Department
Lee's Summit, Missouri

11/08/2021

SCOPE OF WORK

THIS IS NOT AN ALL INCLUSIVE LIST. CONTRACTOR SHALL UTILIZE SPECIFIED EQUIPMENT PART OR ENGINEER APPROVED EQUIVALENT. CONTRACTOR SHALL VERIFY ALL NEEDED EQUIPMENT TO PROVIDE A FUNCTIONAL SITE. THE PROJECT GENERALLY CONSISTS OF THE FOLLOWING:

TOWER SCOPE OF WORK:
- INSTALL (3) PROPOSED PANEL ANTENNAS (1 PER SECTOR)
- INSTALL (1) PROPOSED ANTENNA PLATFORM
- INSTALL PROPOSED JUMPERS
- INSTALL (6) PROPOSED RRUs (2 PER SECTOR)
- INSTALL (1) PROPOSED OVER VOLTAGE PROTECTION DEVICE (OVP)
- INSTALL (1) PROPOSED HYBRID CABLE

GROUND SCOPE OF WORK:
- INSTALL (1) PROPOSED METAL PLATFORM
- INSTALL (1) PROPOSED ICE BRIDGE
- INSTALL (1) PROPOSED PPC CABINET
- INSTALL (1) PROPOSED EQUIPMENT CABINET
- INSTALL (1) PROPOSED POWER CONDUIT
- INSTALL (1) PROPOSED TELCO CONDUIT
- INSTALL (1) PROPOSED TELCO-FIBER BOX
- INSTALL (1) PROPOSED GPS UNIT
- INSTALL (1) PROPOSED SAFETY SWITCH (IF REQUIRED)
- INSTALL (1) PROPOSED FIBER NID (IF REQUIRED)
- INSTALL (1) PROPOSED METER SOCKET

SITE INFORMATION

PROPERTY OWNER:	PAUL L KELLEY TRUST
ADDRESS:	1204 N.E. WOODS CHAPEL ROAD LEES SUMMIT – MO – 64064
TOWER TYPE:	MONOPOLE
TOWER CO SITE ID:	306042
TOWER APP NUMBER:	13683130_D2
COUNTY:	JACKSON
LATITUDE (NAD 83):	38° 58' 59.570" N 38.98321389
LONGITUDE (NAD 83):	94° 21' 0.230" W -94.35006389
ZONING JURISDICTION:	PRAIRIE, MISSOURI
ZONING DISTRICT:	CITY OF LEE'S SUMMIT
PARCEL NUMBER:	43-600-03-11-00-0-00-000
OCCUPANCY GROUP:	U
CONSTRUCTION TYPE:	II-B
POWER COMPANY:	KANSAS CITY POWER & LIGHT
TELEPHONE COMPANY:	AT&T

PROJECT DIRECTORY

APPLICANT:	DISH Wireless L.L.C. 5701 SOUTH SANTA FE DRIVE LITTLETON, CO 80120
TOWER OWNER:	AMERICAN TOWER 10 PRESIDENTIAL WAY WOBURN, MA 01801
SITE DESIGNER:	PETER LICHOMSKI, AIA 49030 PONTIAC TRAIL, SUITE 400 WIXOM, MI 48393 PH: (248) 705-9212
SITE ACQUISITION:	BRIAN VAN ASTEN
CONSTRUCTION MANAGER:	DERRICK CARTER
RF ENGINEER:	DAVID O'HANLON

MISSOURI - CODE OF COMPLIANCE

ALL WORK SHALL BE PERFORMED AND MATERIALS INSTALLED IN ACCORDANCE WITH THE CURRENT EDITIONS OF THE FOLLOWING CODES AS ADOPTED BY THE LOCAL GOVERNING AUTHORITIES. NOTHING IN THESE PLANS IS TO BE CONSTRUED TO PERMIT WORK NOT CONFORMING TO THESE CODES

CODE TYPE	CODE
BUILDING	2012 IBC
MECHANICAL	2018 IMC
ELECTRICAL	2017 NEC

SITE PHOTO

DIRECTIONS

DIRECTIONS FROM LEE'S SUMMIT MUNICIPAL AIRPORT:

DEPART AND HEAD TOWARD NE DOUGLAS ST, BEAR RIGHT ONTO NE DOUGLAS ST, TURN LEFT ONTO NW LEES SUMMIT RD, ROAD NAME CHANGES TO NE DOUGLAS ST, TAKE THE RAMP ON THE LEFT FOR I-470 NORTH AND HEAD TOWARD INDEPENDENCE, ROAD NAME CHANGES TO I-470 N / MO-291 N, AT EXIT 12, HEAD RIGHT ON THE RAMP FOR WOODS CHAPEL ROAD TOWARD FLEMING PARK, TURN RIGHT ONTO NE WOODS CHAPEL RD TOWARD FLEMING PARK, TURN LEFT ONTO NE LAKEWOOD WAY, KEEP STRAIGHT TO GET ONTO NE LAKEWOOD WAY, ARRIVE AT 1204 N.E. WOODS CHAPEL ROAD LEES SUMMIT, MO 64064

SHEET INDEX

SHEET NO.	SHEET TITLE
T-1	TITLE SHEET
A-0	PARCEL PLAN
A-1	COMPOUND AND EQUIPMENT PLAN
A-2	ELEVATION, ANTENNA LAYOUT AND SCHEDULE
A-3	EQUIPMENT PLATFORM AND H-FRAME DETAILS
A-4	EQUIPMENT DETAILS
A-5	EQUIPMENT DETAILS
A-6	EQUIPMENT DETAILS
E-1	ELECTRICAL/FIBER ROUTE PLAN AND NOTES
E-2	ELECTRICAL DETAILS
E-3	ELECTRICAL ONE-LINE, FAULT CALCS & PANEL SCHEDULE
G-1	GROUNDING PLANS AND NOTES
G-2	GROUNDING DETAILS
G-3	GROUNDING DETAILS
RF-1	RF CABLE COLOR CODE
GN-1	LEGEND AND ABBREVIATIONS
GN-2	GENERAL NOTES
GN-3	GENERAL NOTES
GN-4	GENERAL NOTES

MISSOURI ONE CALL SYSTEM
UTILITY NOTIFICATION CENTER OF MISSOURI
(800) 344-7483
WWW.MO1CALL.COM

CALL 2 WORKING DAYS UTILITY NOTIFICATION PRIOR TO CONSTRUCTION

811

GENERAL NOTES

THE FACILITY IS UNMANNED AND NOT FOR HUMAN HABITATION. A TECHNICIAN WILL VISIT THE SITE AS REQUIRED FOR ROUTINE MAINTENANCE. THE PROJECT WILL NOT RESULT IN ANY SIGNIFICANT DISTURBANCE OR EFFECT ON DRAINAGE. NO SANITARY SEWER SERVICE, POTABLE WATER, OR TRASH DISPOSAL IS REQUIRED AND NO COMMERCIAL SIGNAGE IS PROPOSED.

THE PROJECT DEPICTED IN THESE PLANS QUALIFIES AS AN ELIGIBLE FACILITIES REQUEST ENTITLED TO EXPEDITED REVIEW UNDER 47 U.S.C. § 1455(A) AS A MODIFICATION OF AN EXISTING WIRELESS TOWER THAT INVOLVES THE COLLOCATION, REMOVAL, AND/OR REPLACEMENT OF TRANSMISSION EQUIPMENT THAT IS NOT A SUBSTANTIAL CHANGE UNDER CFR § 1.61000 (B)(7).

11"x17" PLOT WILL BE HALF SCALE UNLESS OTHERWISE NOTED

CONTRACTOR SHALL VERIFY ALL PLANS, EXISTING DIMENSIONS, AND CONDITIONS ON THE JOB SITE, AND SHALL IMMEDIATELY NOTIFY THE ENGINEER IN WRITING OF ANY DISCREPANCIES BEFORE PROCEEDING WITH THE WORK.

VICINITY MAP

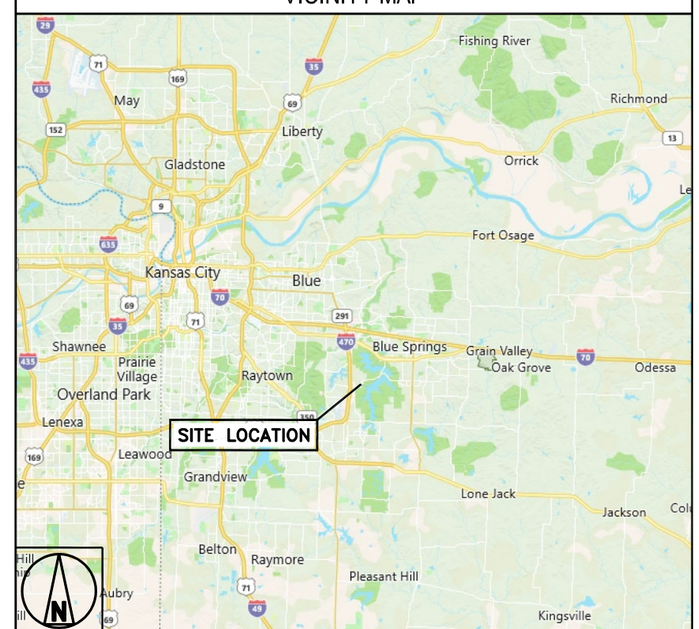

NO SCALE

dish wireless.
5701 SOUTH SANTA FE DRIVE
LITTLETON, CO 80120

AMERICAN TOWER

LAB
49030 Pontiac Trail, Suite 400
Wixom, Michigan 48393
PHONE: (248) 705-9212

STATE OF MISSOURI
PETER P. LICHOMSKI
NUMBER A-2015003113
ARCHITECT

IT IS A VIOLATION OF LAW FOR ANY PERSON, UNLESS THEY ARE ACTING UNDER THE DIRECTION OF A LICENSED PROFESSIONAL ENGINEER, TO ALTER THIS DOCUMENT.

DRAWN BY:	CHECKED BY:	APPROVED BY:
RC	PL	---

RFDS REV #: N/A

CONSTRUCTION DOCUMENTS

SUBMITTALS

REV	DATE	DESCRIPTION
A	07/28/2021	ISSUED FOR REVIEW
0	09/23/2021	ISSUED FOR CONSTRUCTION

A&E PROJECT NUMBER
306042

DISH Wireless L.L.C.
PROJECT INFORMATION
KCMCI00155B
1204 N.E. WOODS CHAPEL ROAD
LEES SUMMIT, MO 64064

SHEET TITLE
TITLE SHEET

SHEET NUMBER
T-1

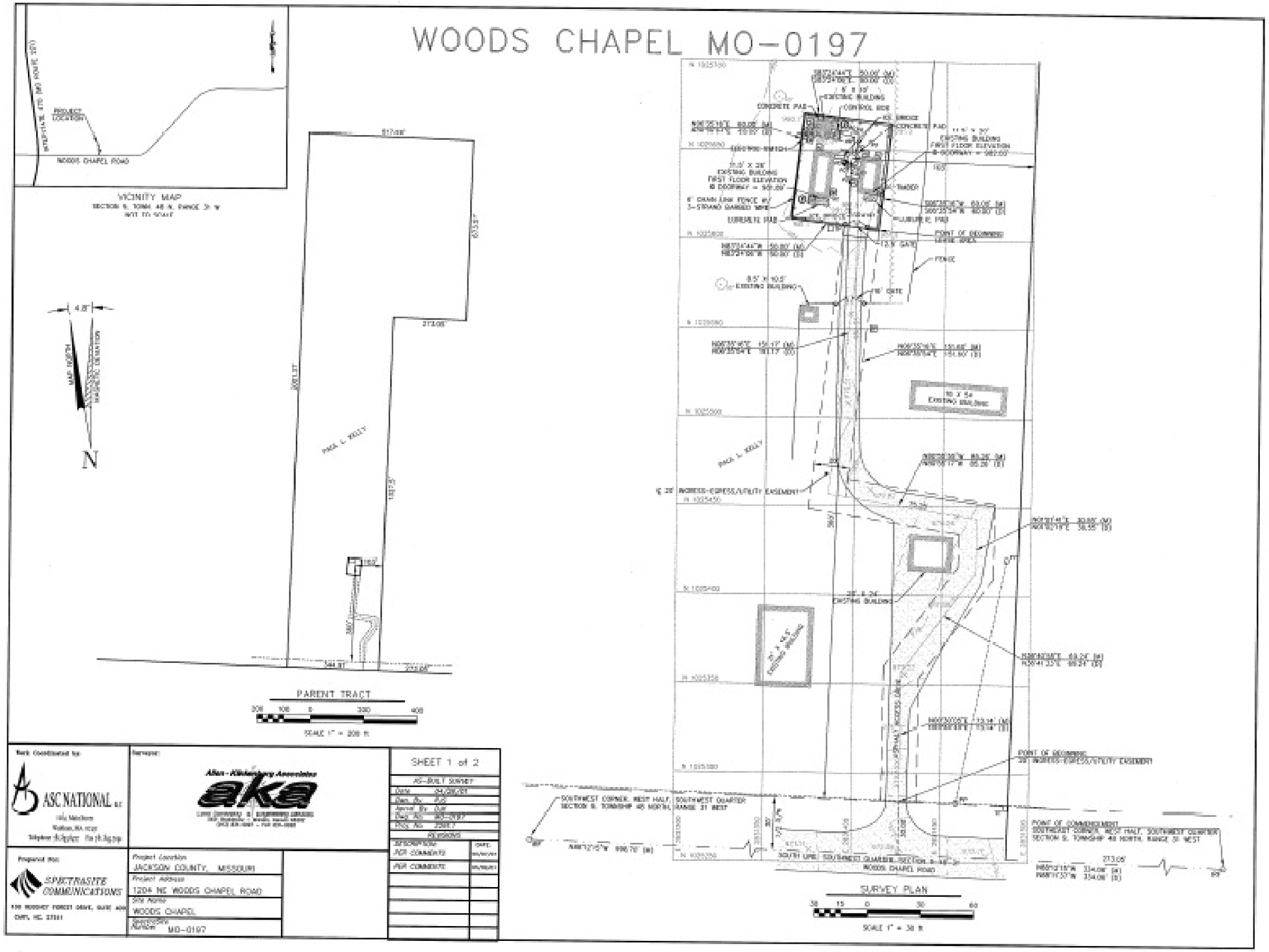

RELEASED FOR CONSTRUCTION
As Noted on Plans Review

Development Services Department
Lee's Summit, Missouri

11/08/2021

SHEET TITLE

PARCEL PLAN

SHEET NUMBER

A-0

RELEASED FOR CONSTRUCTION
As Noted on Plans Review

Development Services Department
Lee's Summit, Missouri

11/08/2021

NOTES

1. CONTRACTOR SHALL FIELD VERIFY ALL DIMENSIONS.
2. ANTENNAS AND MOUNTS OMITTED FOR CLARITY.

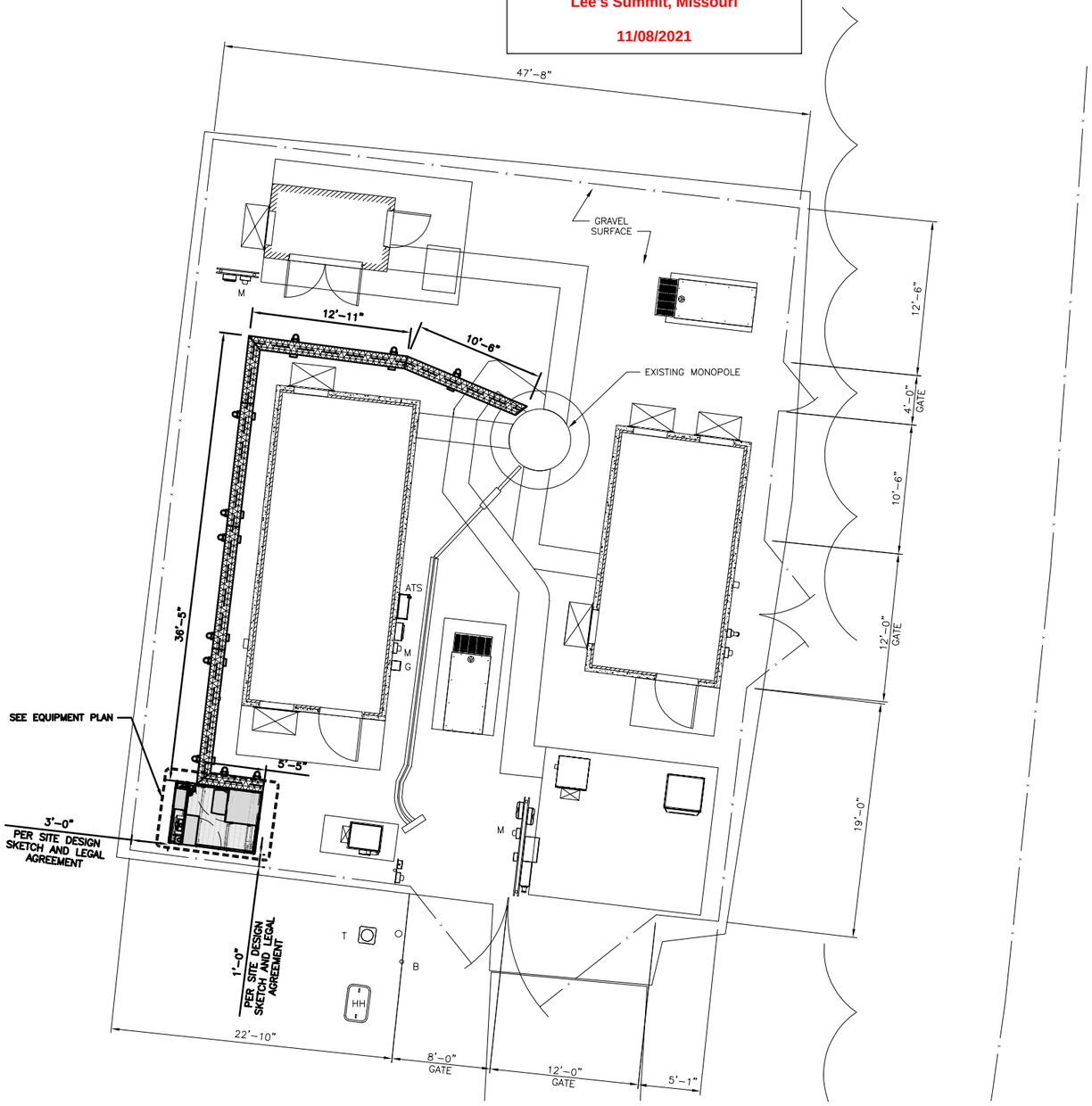

COMPOUND PLAN

6' 4' 2' 0 5' 10'
3/16"=1'-0"

1

NOTES

1. CONTRACTOR SHALL FIELD VERIFY ALL DIMENSIONS.
2. CONTRACTOR SHALL MAINTAIN A 10'-0" MINIMUM SEPARATION BETWEEN THE PROPOSED GPS UNIT, TRANSMITTING ANTENNAS AND EXISTING GPS UNITS.
3. ANTENNAS AND MOUNTS OMITTED FOR CLARITY.

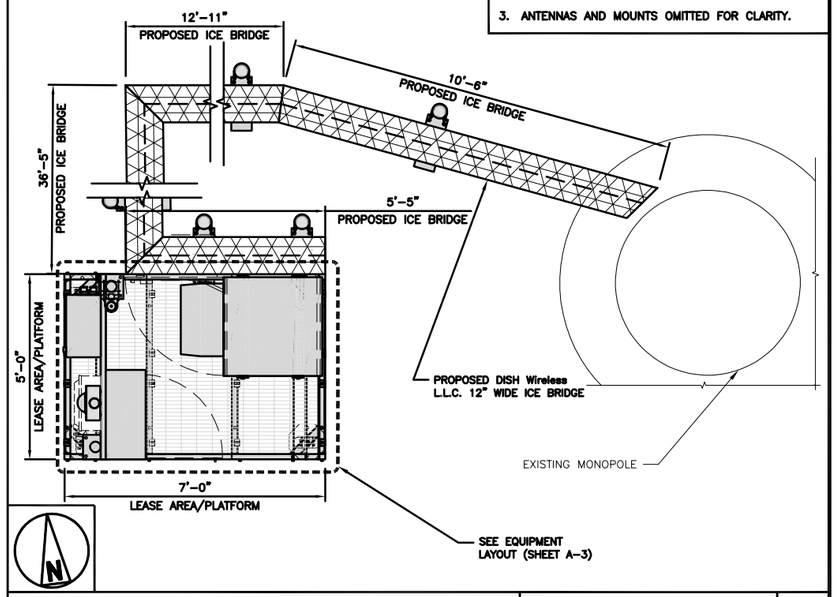

EQUIPMENT PLAN

12" 6" 0 1' 2' 3' 4' 5'
1/2"=1'-0"

2

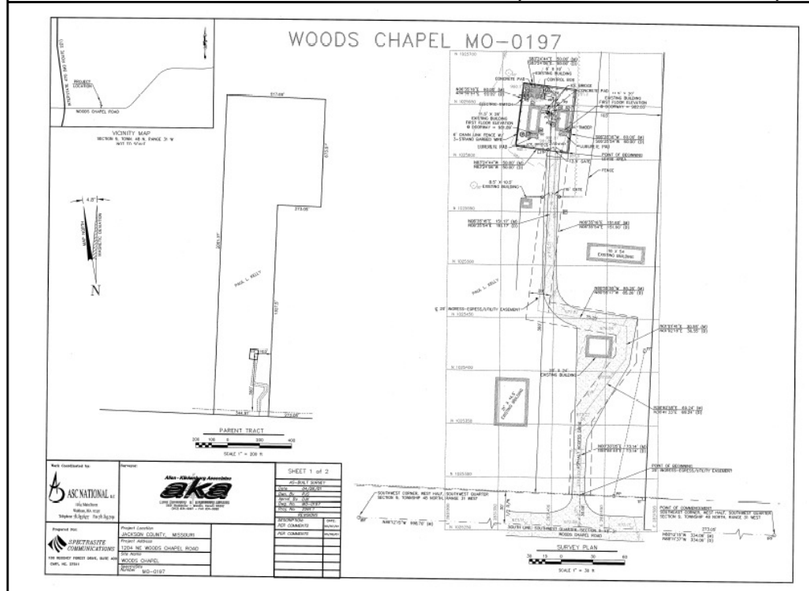

NOTES

1. CONTRACTOR MUST VERIFY THAT THE PROPOSED UTILITY ROUTES ARE WITHIN AMERICAN TOWER'S EASEMENT.
2. ANTENNAS AND MOUNTS OMITTED FOR CLARITY.

SURVEY

NO SCALE

3

dish wireless.
5701 SOUTH SANTA FE DRIVE
LITTLETON, CO 80120

AMERICAN TOWER®

LAB
49030 Pontiac Trail, Suite 400
Wixom, Michigan 48393
PHONE: (248) 705-9212

STATE OF MISSOURI
PETER P. LICHOMSKI
NUMBER A-2015003119
ARCHITECT

IT IS A VIOLATION OF LAW FOR ANY PERSON, UNLESS THEY ARE ACTING UNDER THE DIRECTION OF A LICENSED PROFESSIONAL ENGINEER, TO ALTER THIS DOCUMENT.

DRAWN BY:	CHECKED BY:	APPROVED BY:
RC	PL	---

RFDS REV #: N/A

CONSTRUCTION DOCUMENTS

SUBMITTALS

REV	DATE	DESCRIPTION
A	07/28/2021	ISSUED FOR REVIEW
0	09/23/2021	ISSUED FOR CONSTRUCTION

A&E PROJECT NUMBER
306042

DISH Wireless L.L.C.
PROJECT INFORMATION
KCMCI00155B
1204 N.E. WOODS CHAPEL ROAD
LEES SUMMIT, MO 64064

SHEET TITLE
COMPOUND AND EQUIPMENT PLAN

SHEET NUMBER
A-1

NOTES

1. CONTRACTOR SHALL FIELD VERIFY ALL DIMENSIONS.
2. ANTENNA AND MW DISH SPECIFICATIONS REFER TO ANTENNA SCHEDULE AND TO FINAL CONSTRUCTION RFDS FOR ALL RF DETAILS
3. EXISTING EQUIPMENT AND FENCE OMITTED FOR CLARITY.

RELEASED FOR CONSTRUCTION
As Noted on Plans Review

Development Services Department
Lee's Summit, Missouri

11/08/2021

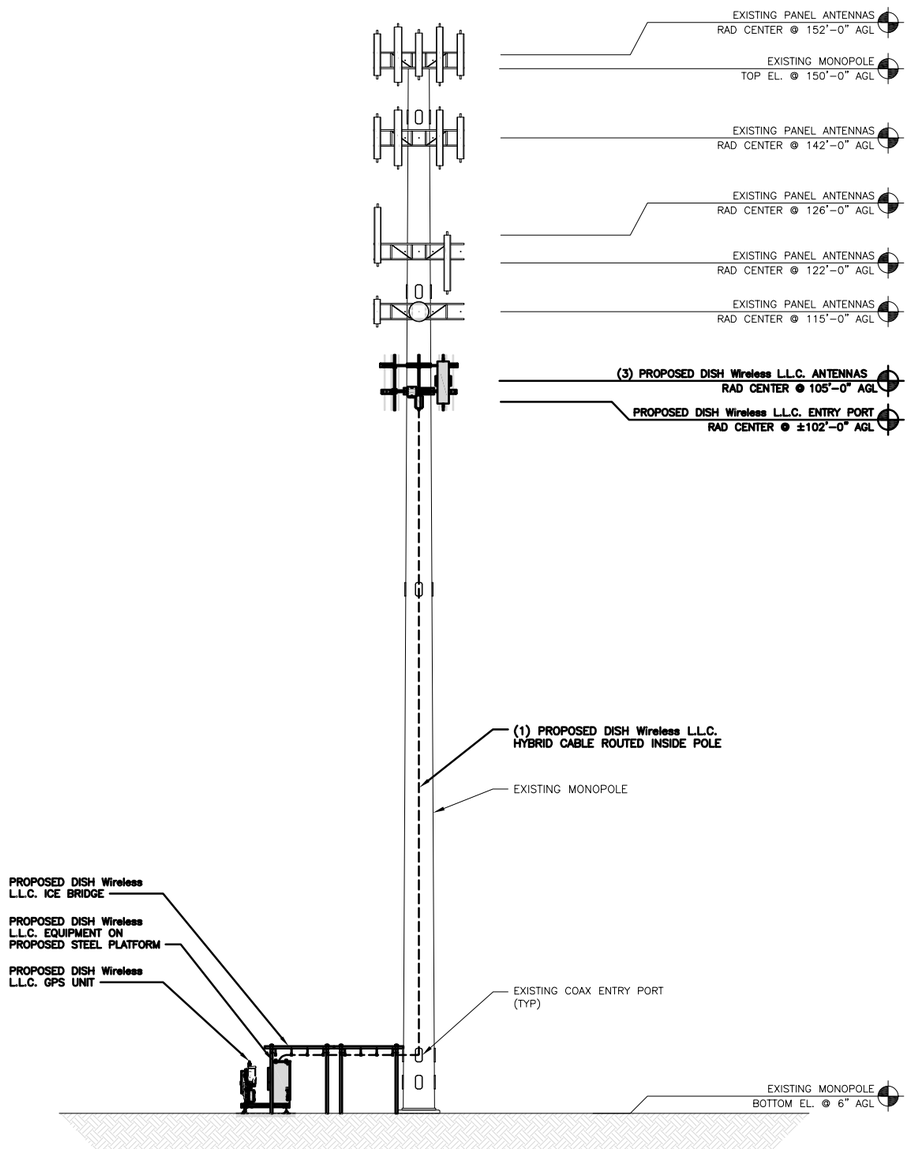

PROPOSED SOUTH ELEVATION

12' 8' 4' 0 10' 20'
3/32"=1'-0"

1

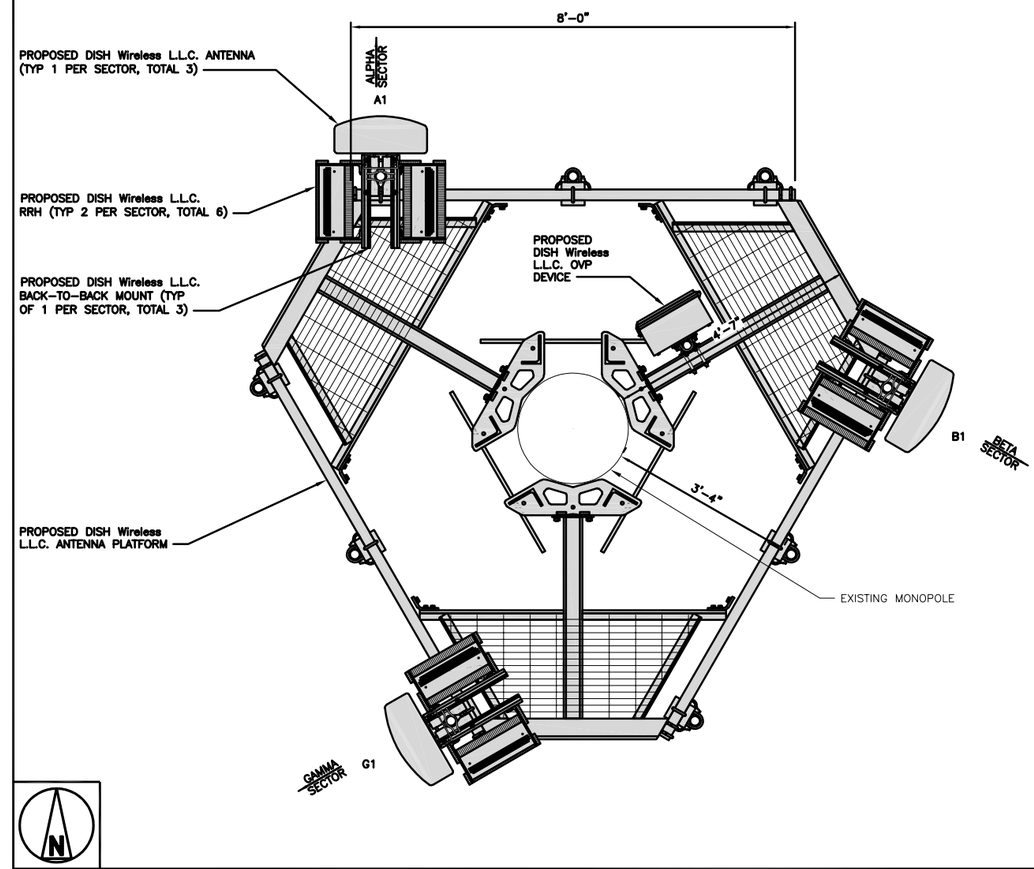

ANTENNA LAYOUT

12" 6" 0 1' 2' 3'
3/4"=1'-0"

2

SECTOR	POSITION	ANTENNA						TRANSMISSION CABLE
		EXISTING OR PROPOSED	MANUFACTURER – MODEL NUMBER	TECHNOLOGY	SIZE (HxW)	AZMUITH	RAD CENTER	FEED LINE TYPE AND LENGTH
ALPHA	A1	PROPOSED	JMA WIRELESS – MX08FRO665-21	5G	72.0" x 20.0"	0°	105'-0"	(1) HIGH-CAPACITY HYBRID CABLE (CUI12PSM6P4-195) (195' LONG)
BETA	B1	PROPOSED	JMA WIRELESS – MX08FRO665-21	5G	72.0" x 20.0"	120°	105'-0"	
GAMMA	G1	PROPOSED	JMA WIRELESS – MX08FRO665-21	5G	72.0" x 20.0"	240°	105'-0"	

SECTOR	POSITION	RRH	
		MANUFACTURER – MODEL NUMBER	TECHNOLOGY
ALPHA	A1	FUJITSU – TA08025-B604	N66, N70
	A1	FUJITSU – TA08025-B605	N29, N71
BETA	B1	FUJITSU – TA08025-B604	N66, N70
	B1	FUJITSU – TA08025-B605	N29, N71
GAMMA	G1	FUJITSU – TA08025-B604	N66, N70
	G1	FUJITSU – TA08025-B605	N29, N71

NOTES

1. CONTRACTOR TO REFER TO FINAL CONSTRUCTION RFDS FOR ALL RF DETAILS.
2. ANTENNA AND RRH MODELS MAY CHANGE DUE TO EQUIPMENT AVAILABILITY. ALL EQUIPMENT CHANGES MUST BE APPROVED AND REMAIN IN COMPLIANCE WITH THE PROPOSED DESIGN AND STRUCTURAL ANALYSES.

ANTENNA SCHEDULE

NO SCALE

3

dish wireless.
5701 SOUTH SANTA FE DRIVE
LITTLETON, CO 80120

AMERICAN TOWER®

LAB
49030 Pontiac Trail, Suite 400
Wixom, Michigan 48393
PHONE: (248) 705-9212

STATE OF MISSOURI
PETER B. LICHOMSKI
NUMBER A-2015003119
ARCHITECT

IT IS A VIOLATION OF LAW FOR ANY PERSON, UNLESS THEY ARE ACTING UNDER THE DIRECTION OF A LICENSED PROFESSIONAL ENGINEER, TO ALTER THIS DOCUMENT.

DRAWN BY:	CHECKED BY:	APPROVED BY:
RC	PL	---

RFDS REV #: N/A

CONSTRUCTION DOCUMENTS

SUBMITTALS

REV	DATE	DESCRIPTION
A	07/28/2021	ISSUED FOR REVIEW
0	09/23/2021	ISSUED FOR CONSTRUCTION

A&E PROJECT NUMBER
306042

DISH Wireless L.L.C.
PROJECT INFORMATION
KCMCI00155B
1204 N.E. WOODS CHAPEL ROAD
LEES SUMMIT, MO 64064

SHEET TITLE
ELEVATION, ANTENNA LAYOUT AND SCHEDULE

SHEET NUMBER
A-2

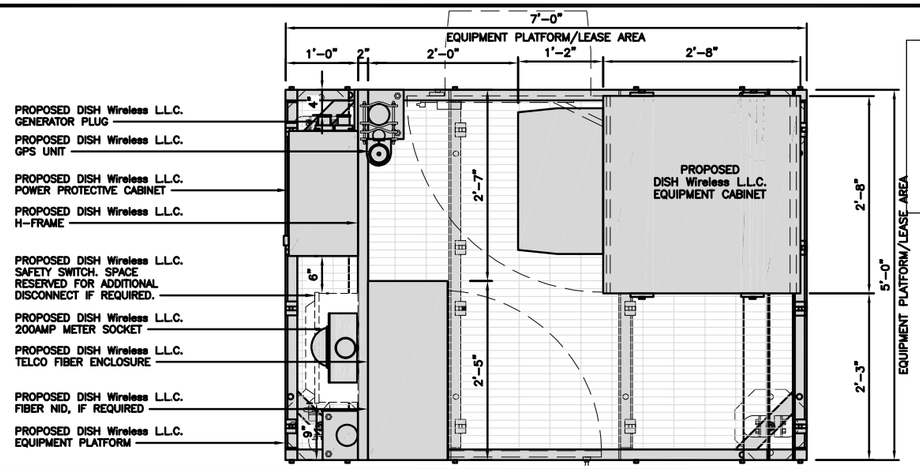

RELEASED FOR CONSTRUCTION
As Noted on Plans Review

Development Services Department
Lee's Summit, Missouri

11/08/2021

PLATFORM EQUIPMENT PLAN

12" 9" 6" 3" 0 1' 2'
1"=1'-0"

1

COMMSCOPE MTC4045LP 5X7 PLATFORM	
DIMENSIONS (HxWxD)	16"x84"x60"
TOTAL WEIGHT	423 LBS

NOTE:
GC TO PROVIDE EXTENDED THREAD FOR PLATFORM IF REQUIRED HEIGHT EXCEEDS 17"

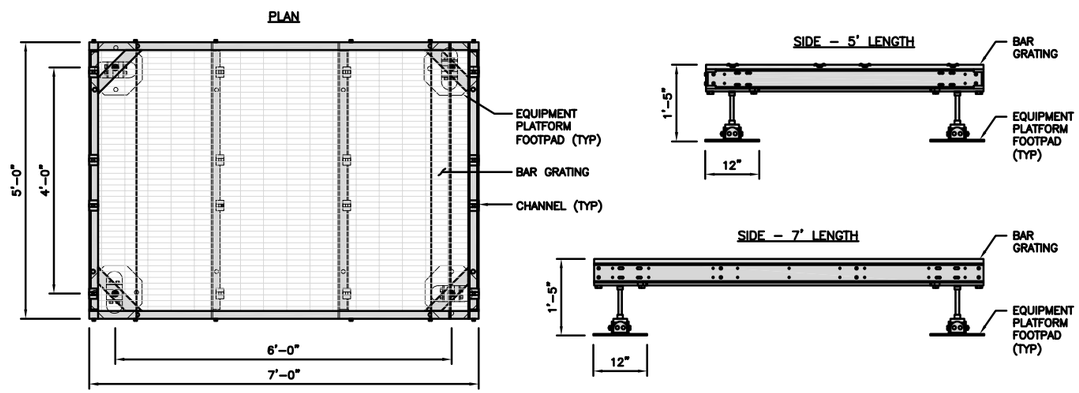

PLATFORM DETAIL

NO SCALE

2

KENWOOD T1701KT5-5S H-FRAME	
UNISTRUT/SUPPORT RAIL	5
WEIGHT/ VOLUME	173.6 LBS

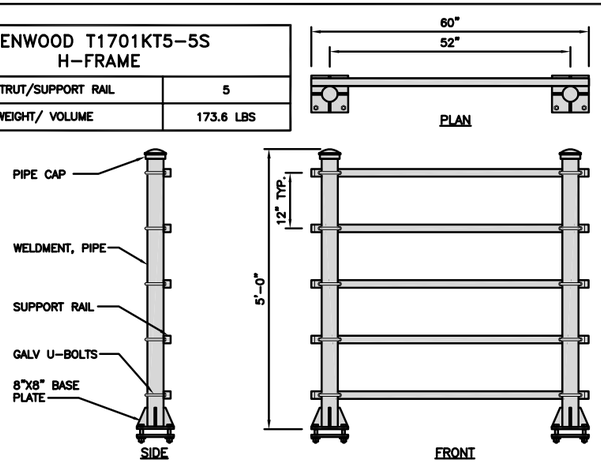

H-FRAME DETAIL

NO SCALE

3

NOT USED

NO SCALE

4

NOTES

1. CONTRACTOR TO BURY PLATFORM FEET WITH A MINIMUM OF 2" OF FILL PER EXISTING SITE SURFACE
2. WEED BARRIER FABRIC TO BE ADDED AT DISCRETION OF DISH Wireless L.L.C. CONSTRUCTION MANAGER AT TIME OF CONSTRUCTION. ONE SHEET 8'x8' INSTALLED UNDER ALL FOUR FEET OF THE PLATFORM (4 MIL BLACK PLASTIC)
3. EQUIPMENT CABINET OMITTED FOR CLARITY

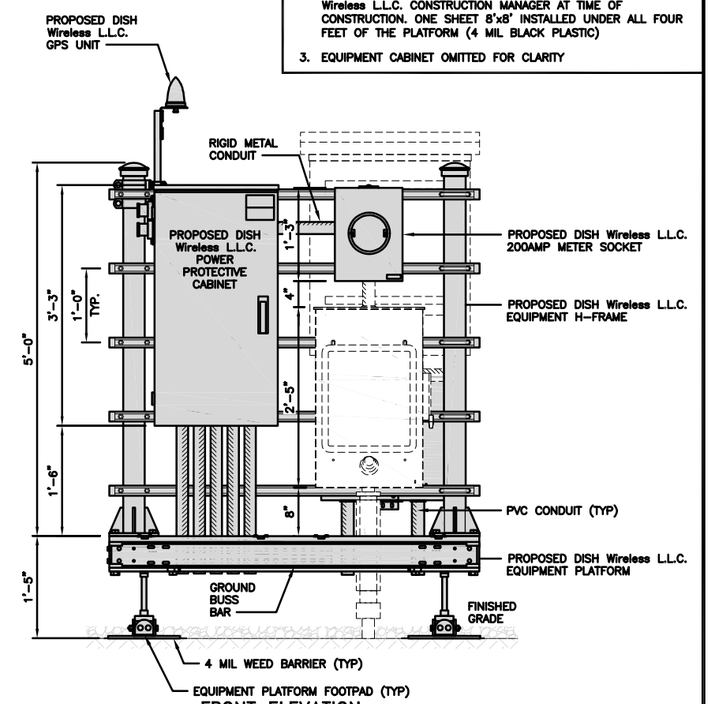

FRONT ELEVATION

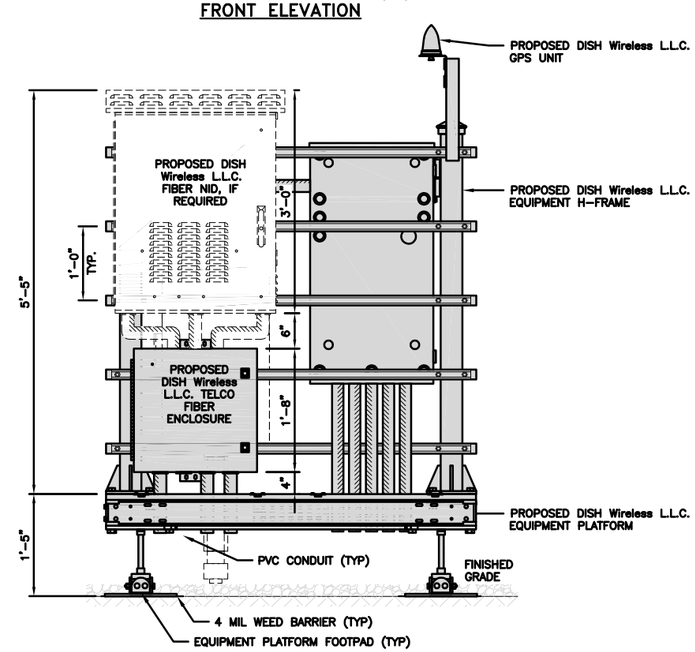

BACK ELEVATION

H-FRAME EQUIPMENT ELEVATION

12" 9" 6" 3" 0 1' 2'
1"=1'-0"

5

dish wireless.
5701 SOUTH SANTA FE DRIVE
LITTLETON, CO 80120

AMERICAN TOWER®

LAB
49030 Pontiac Trail, Suite 400
Wixom, Michigan 48393
PHONE: (248) 705-9212

STATE OF MISSOURI
PETER D. LICHTENSTEIN
NUMBER A-2015003119
ARCHITECT

IT IS A VIOLATION OF LAW FOR ANY PERSON, UNLESS THEY ARE ACTING UNDER THE DIRECTION OF A LICENSED PROFESSIONAL ENGINEER, TO ALTER THIS DOCUMENT.

DRAWN BY:	CHECKED BY:	APPROVED BY:
RC	PL	---

RFDS REV #: N/A

CONSTRUCTION DOCUMENTS

SUBMITTALS

REV	DATE	DESCRIPTION
A	07/28/2021	ISSUED FOR REVIEW
0	09/23/2021	ISSUED FOR CONSTRUCTION

A&E PROJECT NUMBER
306042

DISH Wireless L.L.C.
PROJECT INFORMATION
KCMCI00155B
1204 N.E. WOODS CHAPEL ROAD
LEES SUMMIT, MO 64064

SHEET TITLE
EQUIPMENT PLATFORM AND H-FRAME DETAILS

SHEET NUMBER
A-3

CHARLES INDUSTRY HEX CUBE-PM639155N4	
DIMENSIONS (HxWxD)	74"x32"x32"
POWER PLANT	-48VDC ABB/600W
TOTAL WEIGHT (EMPTY)	408 lbs

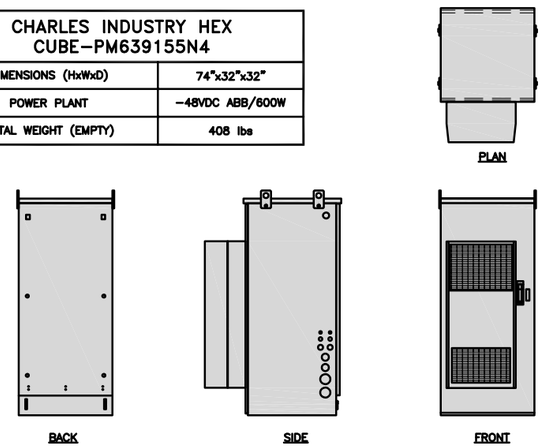

CABINET DETAIL — NO SCALE — 1

RAYCAP PPC RDIAC-2465-P-240-MTS	
ENCLOSURE DIMENSIONS (HxWxD):	39"x22.855"x12.593
WEIGHT:	80 lbs
OPERATING AC VOLTAGE	240/120 1 PHASE 3W+G

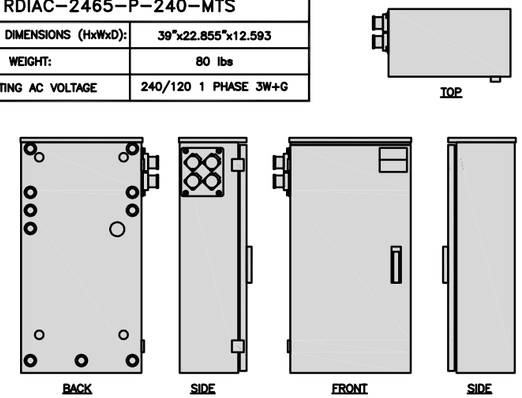

POWER PROTECTION CABINET (PPC) DETAIL — NO SCALE — 2

SQUARE D SAFETY SWITCHES D224NRB	
ENCLOSURE DIM (HxWxD)	29.25"x19.00"x8.50"
ENCLOSURE TYPE	NEMA 3R RAINPROOF
UL LISTED	FILE E-2875

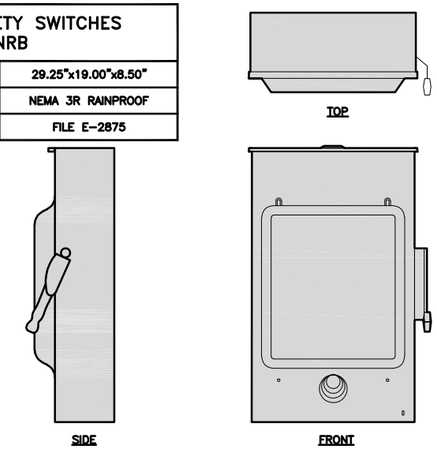

SAFETY SWITCH DETAIL — NO SCALE — 3

EATON METER SOCKET UNRRS213BEUSE	
METER SOCKET TYPE	RING
ENCLOSURE DIM (HxWxD)	16"x12"x6"
MAIN AMPERE RATING	200A
WEIGHT	18 LBS

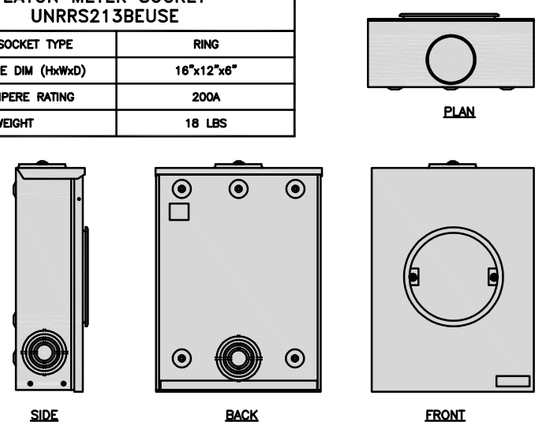

METER SOCKET DETAIL — NO SCALE — 4

ZAYO 5RU (LEFT SWING DOOR) FIBER NID ENCLOSURE	
DIMENSIONS (HxWxD)	36.1"x29"x12.9"
WEIGHT	85 lbs

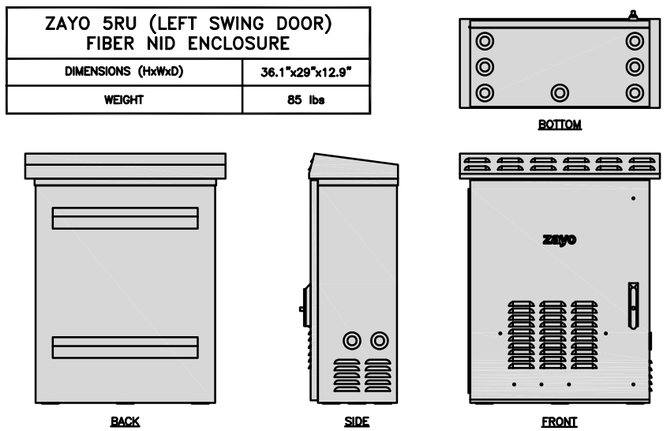

FIBER NID ENCLOSURE DETAIL — NO SCALE — 5

CHARLES CFIT-PF2020DSH1 FIBER TELCO ENCLOSURE	
ENCLOSURE DIMS (HxWxD)	20"x20"x9"
ENCLOSURE WEIGHT	20 lbs
MOUNTING	WALL
COMPLIANCE	TYPE 4

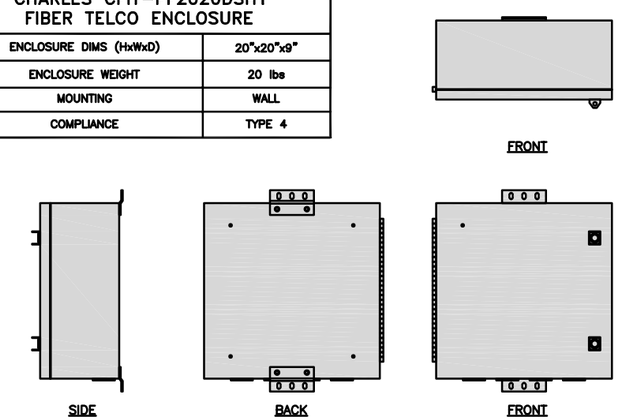

FIBER TELCO ENCLOSURE DETAIL — NO SCALE — 6

COMMSCOPE WB-K110-B WAVEGUIDE BRIDGE KIT	
DIMENSIONS (HxL)	160"x10'
WEIGHT/ VOLUME	325.0 LBS
CABLE RUN (QTY)	12

INCLUDED PRODUCTS:	
	WB-T12-3 TRAPEZE KIT, 3 RUNGS
	WB-LB12-3 SUPPORT BRACKET
	MF-130 DIRECT BURIAL PIPE COLUMN, 13'-4"

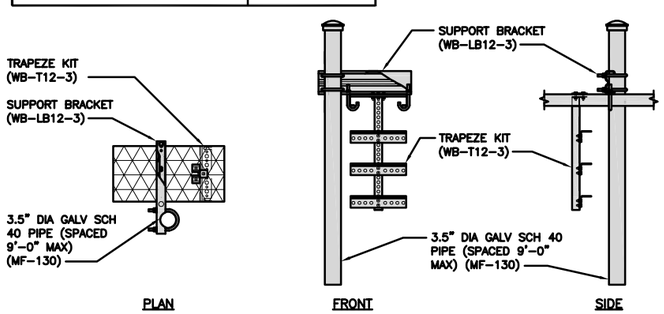

ICE BRIDGE DETAIL — NO SCALE — 7

RELEASED FOR CONSTRUCTION
As Noted on Plans Review

Development Services Department
Lee's Summit, Missouri

11/08/2021

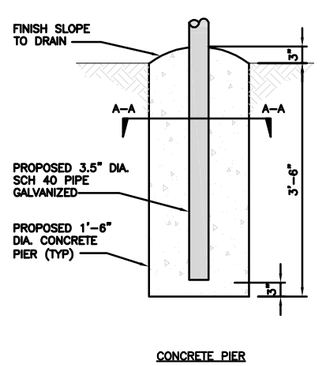

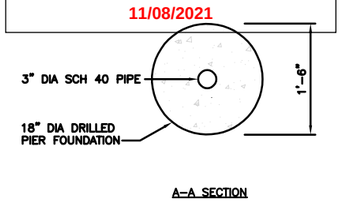

TYPICAL ICE BRIDGE CONCRETE PIER DETAIL — NO SCALE — 8

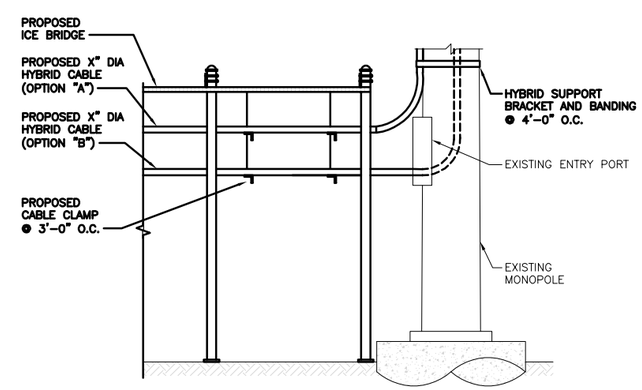

HYBRID CABLE RUN — NO SCALE — 9

dish wireless.

5701 SOUTH SANTA FE DRIVE
LITTLETON, CO 80120

AMERICAN TOWER®

LAB
49030 Pontiac Trail, Suite 400
Wixom, Michigan 48393
PHONE: (248) 705-9212

STATE OF MISSOURI
PETER P. LICHOMSKI
NUMBER A-2015003119
ARCHITECT

IT IS A VIOLATION OF LAW FOR ANY PERSON, UNLESS THEY ARE ACTING UNDER THE DIRECTION OF A LICENSED PROFESSIONAL ENGINEER, TO ALTER THIS DOCUMENT.

DRAWN BY:	CHECKED BY:	APPROVED BY:
RC	PL	---

RFDS REV #: N/A

CONSTRUCTION DOCUMENTS

SUBMITTALS

REV	DATE	DESCRIPTION
A	07/28/2021	ISSUED FOR REVIEW
0	09/23/2021	ISSUED FOR CONSTRUCTION

A&E PROJECT NUMBER
306042

DISH Wireless L.L.C.
PROJECT INFORMATION
KCMCI00155B
1204 N.E. WOODS CHAPEL ROAD
LEES SUMMIT, MO 64064

SHEET TITLE
EQUIPMENT DETAILS

SHEET NUMBER
A-4

PCTEL GPSGL-TMG-SPI-40NCB	
DIMENSIONS (DIAxH) MM/INCH	81x184mm 3.2"x7.25"
WEIGHT W/ACCESSORIES	075 lbs
CONNECTOR	N-FEMALE
FREQUENCY RANGE	1590 ± 30MHz

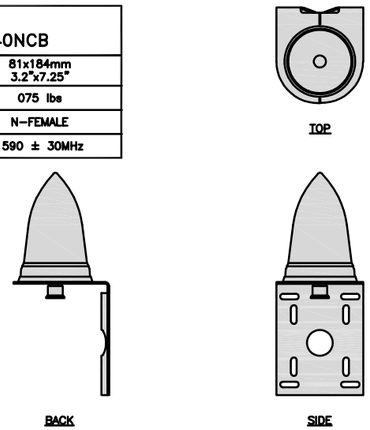

GPS DETAIL | NO SCALE | 1

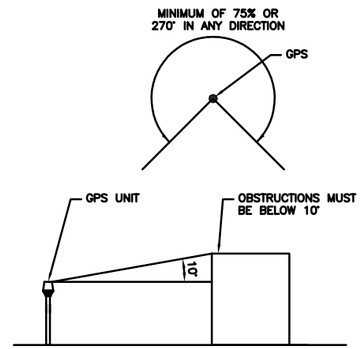

GPS MINIMUM SKY VIEW REQUIREMENTS | NO SCALE | 2

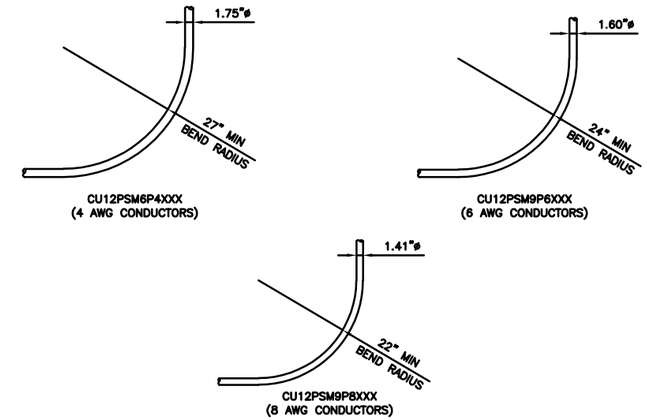

CABLES UNLIMITED HYBRID CABLE MINIMUM BEND RADIUSES | NO SCALE | 3

NOT USED | NO SCALE | 4

NOT USED | NO SCALE | 5

NOT USED | NO SCALE | 6

NOT USED | NO SCALE | 7

NOT USED | NO SCALE | 8

NOT USED | NO SCALE | 9

RELEASED FOR CONSTRUCTION
As Noted on Plans Review

Development Services Department
Lee's Summit, Missouri

11/08/2021

dish wireless.
5701 SOUTH SANTA FE DRIVE
LITTLETON, CO 80120

AMERICAN TOWER®

LAB
49030 Pontiac Trail, Suite 400
Wixom, Michigan 48393
PHONE: (248) 705-9212

STATE OF MISSOURI
PETER J. LICHOMSKI
NUMBER A-2015009113
ARCHITECT

IT IS A VIOLATION OF LAW FOR ANY PERSON, UNLESS THEY ARE ACTING UNDER THE DIRECTION OF A LICENSED PROFESSIONAL ENGINEER, TO ALTER THIS DOCUMENT.

DRAWN BY:	CHECKED BY:	APPROVED BY:
RC	PL	---

RFDS REV #: N/A

CONSTRUCTION DOCUMENTS

SUBMITTALS

REV	DATE	DESCRIPTION
A	07/28/2021	ISSUED FOR REVIEW
0	09/23/2021	ISSUED FOR CONSTRUCTION

A&E PROJECT NUMBER
306042

DISH Wireless L.L.C.
PROJECT INFORMATION
KCMCI00155B
1204 N.E. WOODS CHAPEL ROAD
LEES SUMMIT, MO 64064

SHEET TITLE
EQUIPMENT DETAILS

SHEET NUMBER
A-5

FUJITSU TRIPLE BAND TA08025-B605	
DIMENSIONS (HxWxD)	14.9"x15.7"x9"
WEIGHT	74.95 lbs
CONNECTOR TYPE	4.3-10 RF CONNECTOR
POWER SUPPLY	DC -58~-36V

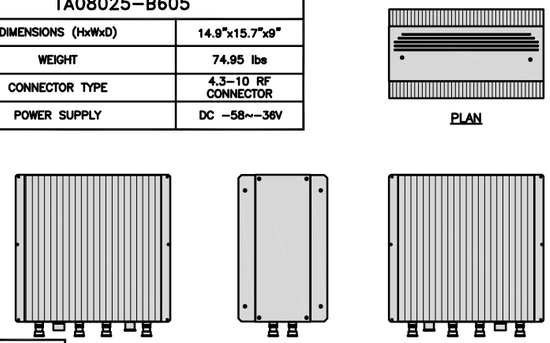

NOTES

FINAL RRH SPECIFICATIONS TO BE CONFIRMED BY GC

RRH DETAIL | NO SCALE | 1

FUJITSU DUAL BAND TA08025-B604	
DIMENSIONS (HxWxD)	14.9"x15.7"x7.8"
WEIGHT	63.9 lbs
CONNECTOR TYPE	4.3-10 RF CONNECTOR
POWER SUPPLY	DC -58~-36V

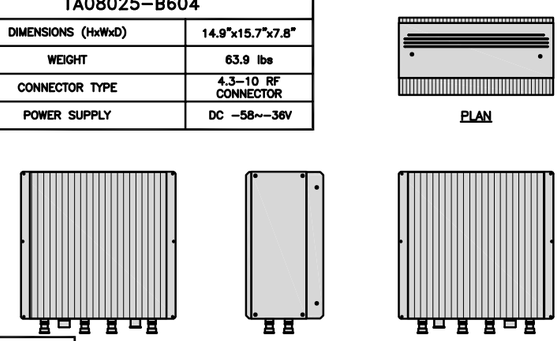

NOTES

FINAL RRH SPECIFICATIONS TO BE CONFIRMED BY GC

RRH DETAIL | NO SCALE | 2

SABRE DOUBLE Z-BRACKET C10123155	
DIMENSIONS (HxWxD) (1 BRACKET)	5"x20"x1-13/16"
WEIGHT (FULL ASSEMBLY)	35.79 lbs
PACKAGE QUANTITY	4

#	DESCRIPTION
1	PLATE, CHANNEL BRACKET
2	RRH Z BRACKET, 3/16"
3	THREADED ROD ASSEMBLY 1/2"x12"

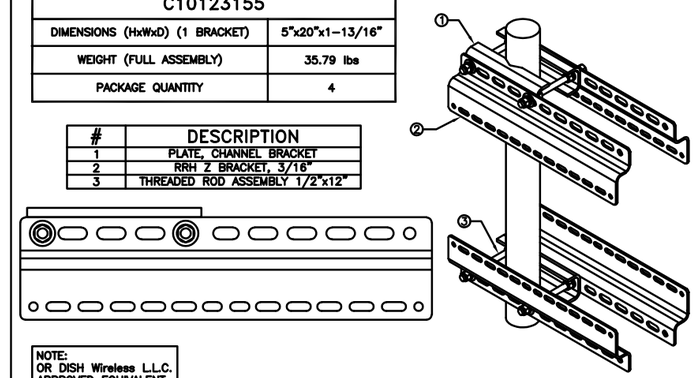

NOTE:
OR DISH Wireless L.L.C. APPROVED EQUIVALENT

RRH MOUNT DETAIL | NO SCALE | 3

RAYCAP RDIDC-9181-PF-48 DC SURGE PROTECTION (OVP)	
DIMENSIONS (HxWxD)	18.98"x14.39"x8.15"
WEIGHT	21.82 LBS

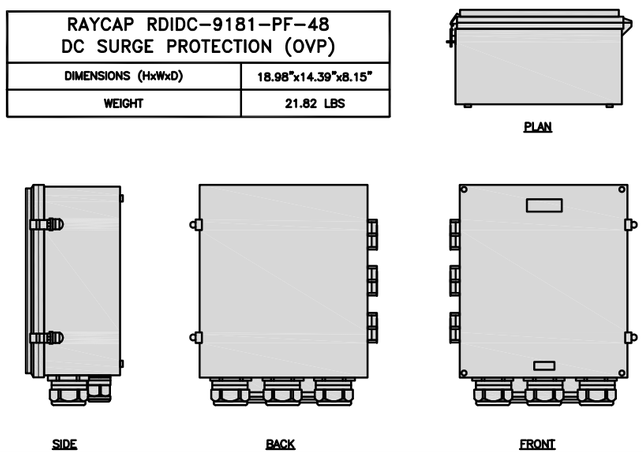

SURGE SUPPRESSION DETAIL (OVP) | NO SCALE | 4

JMA MX08FR0665-21	
DIMENSIONS (HxWxD)	72"x20.0"x8.0"
RF PORTS, CONNECTOR TYPE	8 x 4.3-10 FEMALE
WEIGHT	64.5 lbs
WEIGHT WITH BRACKETS	82.5 lbs

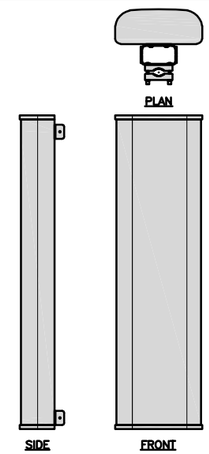

NOTES

FINAL ANTENNA SPECIFICATIONS TO BE CONFIRMED BY GC

ANTENNA DETAIL | NO SCALE | 5

JMA ANTENNA MOUNT BRACKET #91900318	
TOTAL WEIGHT (WITH BRACKETS)	18 lbs (8.18 Kg)
POLE DIAMETER RANGE	2.5" TO 4.5"

NOTE:
KIT #91900318: TOP AND BOTTOM BRACKETS FOR 4-,6-, AND 8-FOOT ANTENNAS

ANTENNA BRACKET NOT PART OF KIT

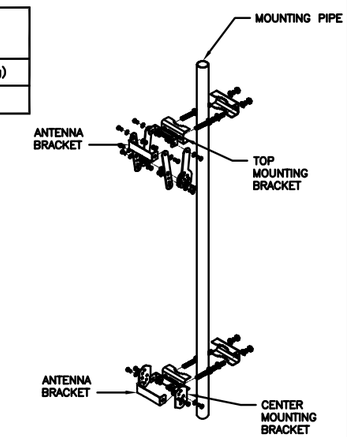

NOTE:
OR DISH Wireless L.L.C. APPROVED EQUIVALENT

ANTENNA BRACKET DETAIL | NO SCALE | 6

COMMSCOPE XP-2040 CROSSOVER PLATE	
DIMENSIONS (HxW)	10"x12"
WEIGHT	11 lbs

NOTE:
OR DISH Wireless L.L.C. APPROVED EQUIVALENT

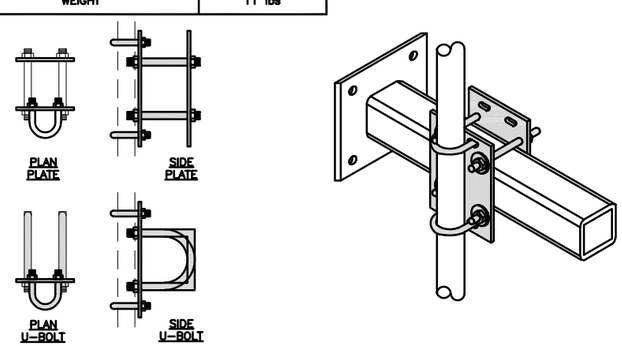

RRH/OVP MOUNT DETAIL | NO SCALE | 7

COMMSCOPE MC-PK8-DSH	
FACE WIDTH	96"
WEIGHT	1373.08 lbs
NOTE: 15" TO 38" O.D.	

NOTE:
OR DISH Wireless L.L.C. APPROVED EQUIVALENT

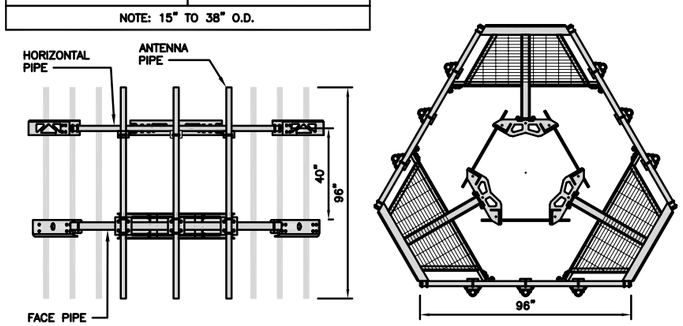

ANTENNA PLATFORM DETAIL | NO SCALE | 8

NOT USED | NO SCALE | 9

RELEASED FOR CONSTRUCTION
As Noted on Plans Review

Development Services Department
Lee's Summit, Missouri

11/08/2021

dish wireless.
5701 SOUTH SANTA FE DRIVE
LITTLETON, CO 80120

AMERICAN TOWER

LAB
49030 Pontiac Trail, Suite 400
Wixom, Michigan 48393
PHONE: (248) 705-9212

STATE OF MISSOURI
PETER P. LICHOMSKI
NUMBER A-2015003113
ARCHITECT

IT IS A VIOLATION OF LAW FOR ANY PERSON, UNLESS THEY ARE ACTING UNDER THE DIRECTION OF A LICENSED PROFESSIONAL ENGINEER, TO ALTER THIS DOCUMENT.

DRAWN BY:	CHECKED BY:	APPROVED BY:
RC	PL	---

RFDS REV #: N/A

CONSTRUCTION DOCUMENTS

SUBMITTALS

REV	DATE	DESCRIPTION
A	07/28/2021	ISSUED FOR REVIEW
0	09/23/2021	ISSUED FOR CONSTRUCTION

A&E PROJECT NUMBER
306042

DISH Wireless L.L.C.
PROJECT INFORMATION
KCMCI00155B
1204 N.E. WOODS CHAPEL ROAD
LEES SUMMIT, MO 64064

SHEET TITLE
EQUIPMENT DETAILS

SHEET NUMBER
A-6

NOTE: VERIFY POWER AND FIBER ROUTING PRIOR TO CONSTRUCTION START

NOTES

1. CONTRACTOR SHALL FIELD VERIFY ALL PROPOSED UNDERGROUND UTILITY CONDUIT ROUTE.
2. ANTENNAS AND MOUNTS OMITTED FOR CLARITY.
3. THE GROUND LEASE DOES NOT SPECIFY OUR UTILITY RIGHTS. "PWR" AND "FBR" PATH DEPICTED ON A–1 AND E–1 ARE BASED ON BEST AVAILABLE INFORMATION INCLUDING BUT NOT LIMITED TO FIELD VERIFICATION, PRIOR PROJECT DOCUMENTATION AND OTHER REAL PROPERTY RIGHTS DOCUMENTS. WHEN INSTALLING THE UTILITIES PLAEASE LOCATE AND FOLLOW EXSITING PATH. IF EXISTING PATH IS NOT AN OPTION PLEASE NOTIFY TOWER OWNER AS FURTHER COORINATION MAY BE NEEDED.

RELEASED FOR CONSTRUCTION
As Noted on Plans Review

Development Services Department
Lee's Summit, Missouri

11/08/2021

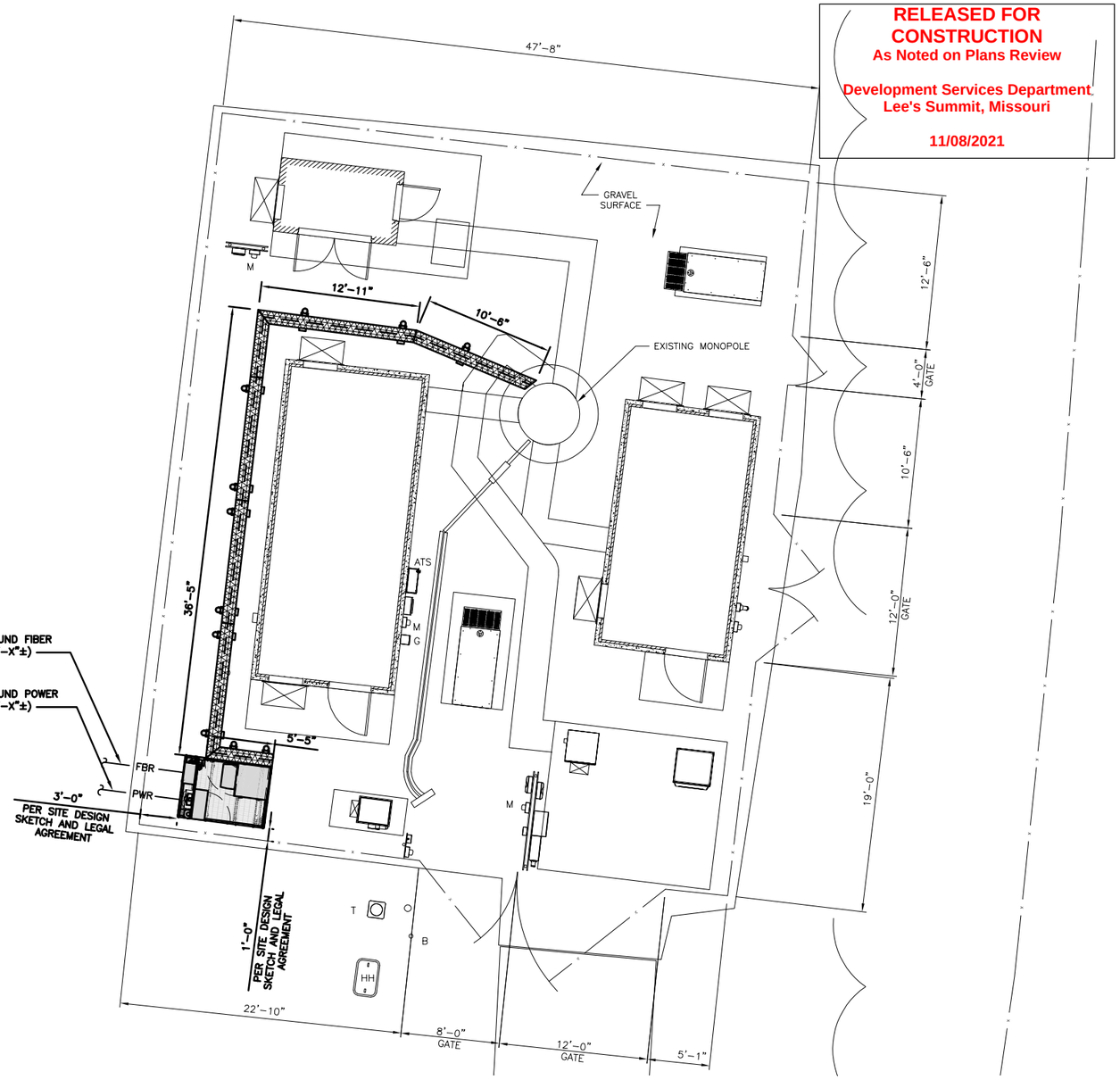

UTILITY ROUTE PLAN

6' 4' 2' 0 5' 10'
3/16"=1'–0"

1

DC POWER WIRING SHALL BE COLOR CODED AT EACH END FOR IDENTIFYING +24V AND –48V CONDUCTORS. RED MARKINGS SHALL IDENTIFY +24V AND BLUE MARKINGS SHALL IDENTIFY –48V.

1. CONTRACTOR SHALL INSPECT THE EXISTING CONDITIONS PRIOR TO SUBMITTING A BID. ANY QUESTIONS ARISING DURING THE BID PERIOD IN REGARDS TO THE CONTRACTOR'S FUNCTIONS, THE SCOPE OF WORK, OR ANY OTHER ISSUE RELATED TO THIS PROJECT SHALL BE BROUGHT UP DURING THE BID PERIOD WITH THE PROJECT MANAGER FOR CLARIFICATION, NOT AFTER THE CONTRACT HAS BEEN AWARDED.
2. ALL ELECTRICAL WORK SHALL BE DONE IN ACCORDANCE WITH CURRENT NATIONAL ELECTRICAL CODES AND ALL STATE AND LOCAL CODES, LAWS, AND ORDINANCES. PROVIDE ALL COMPONENTS AND WIRING SIZES AS REQUIRED TO MEET NEC STANDARDS.
3. LOCATION OF EQUIPMENT, CONDUIT AND DEVICES SHOWN ON THE DRAWINGS ARE APPROXIMATE AND SHALL BE COORDINATED WITH FIELD CONDITIONS PRIOR TO CONSTRUCTION.
4. CONDUIT ROUGH–IN SHALL BE COORDINATED WITH THE MECHANICAL EQUIPMENT TO AVOID LOCATION CONFLICTS. VERIFY WITH THE MECHANICAL EQUIPMENT CONTRACTOR AND COMPLY AS REQUIRED.
5. CONTRACTOR SHALL PROVIDE ALL BREAKERS, CONDUITS AND CIRCUITS AS REQUIRED FOR A COMPLETE SYSTEM.
6. CONTRACTOR SHALL PROVIDE PULL BOXES AND JUNCTION BOXES AS REQUIRED BY THE NEC ARTICLE 314.
7. CONTRACTOR SHALL PROVIDE ALL STRAIN RELIEF AND CABLE SUPPORTS FOR ALL CABLE ASSEMBLIES. INSTALLATION SHALL BE IN ACCORDANCE WITH MANUFACTURER'S SPECIFICATIONS AND RECOMMENDATIONS.
8. ALL DISCONNECTS AND CONTROLLING DEVICES SHALL BE PROVIDED WITH ENGRAVED PHENOLIC NAMEPLATES INDICATING EQUIPMENT CONTROLLED, BRANCH CIRCUITS INSTALLED ON, AND PANEL FIELD LOCATIONS FED FROM.
9. INSTALL AN EQUIPMENT GROUNDING CONDUCTOR IN ALL CONDUITS PER THE SPECIFICATIONS AND NEC 250. THE EQUIPMENT GROUNDING CONDUCTORS SHALL BE BONDED AT ALL JUNCTION BOXES, PULL BOXES, AND ALL DISCONNECT SWITCHES, AND EQUIPMENT CABINETS.
10. ALL NEW MATERIAL SHALL HAVE A U.L. LABEL.
11. PANEL SCHEDULE LOADING AND CIRCUIT ARRANGEMENTS REFLECT POST–CONSTRUCTION EQUIPMENT.
12. CONTRACTOR SHALL BE RESPONSIBLE FOR AS–BUILT PANEL SCHEDULE AND SITE DRAWINGS.
13. ALL TRENCHES IN COMPOUND TO BE HAND DUG.

ELECTRICAL NOTES

NO SCALE

2

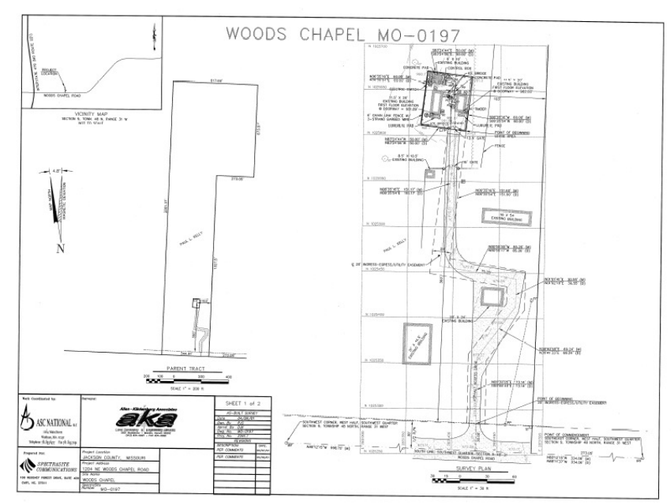

NOTES

1. CONTRACTOR MUST VERIFY THAT THE PROPOSED UTILITY ROUTES ARE WITHIN AMERICAN TOWER'S EASEMENT.
2. ANTENNAS AND MOUNTS OMITTED FOR CLARITY.

SURVEY

NO SCALE

3

dish wireless.

5701 SOUTH SANTA FE DRIVE
LITTLETON, CO 80120

AMERICAN TOWER®

LAB
49030 Pontiac Trail, Suite 400
Wixom, Michigan 48393
PHONE: (248) 705-9212

STATE OF MISSOURI
PETER P. LICHOMSKI
NUMBER A-2015008119
ARCHITECT

IT IS A VIOLATION OF LAW FOR ANY PERSON, UNLESS THEY ARE ACTING UNDER THE DIRECTION OF A LICENSED PROFESSIONAL ENGINEER, TO ALTER THIS DOCUMENT.

DRAWN BY:	CHECKED BY:	APPROVED BY:
RC	PL	---

RFDS REV #: N/A

CONSTRUCTION DOCUMENTS

SUBMITTALS

REV	DATE	DESCRIPTION
A	07/28/2021	ISSUED FOR REVIEW
0	09/23/2021	ISSUED FOR CONSTRUCTION

A&E PROJECT NUMBER
306042

DISH Wireless L.L.C.
PROJECT INFORMATION
KCMCI00155B
1204 N.E. WOODS CHAPEL ROAD
LEES SUMMIT, MO 64064

SHEET TITLE
ELECTRICAL/FIBER ROUTE PLAN AND NOTES

SHEET NUMBER
E-1

CARLON EXPANSION FITTINGS				
COUPLING END PART#	MALE TERMINAL ADAPTER END PART#	SIZE	STD CTN QTY.	TRAVEL LENGTH
E945D	E945DX	1/2"	20	4"
E945E	E945EX	3/4"	15	4"
E945F	E945FX	1"	10	4"
E945G	E945GX	1 1/4"	5	4"
E945H	E945HX	1 1/2"	5	4"
E945J	E945JX	2"	15	8"
E945K	E945KX	2 1/2"	10	8"
E945L	E945LX	3"	10	8"
E945M	E945MX	3 1/2"	5	8"
E945N	E945NX	4"	5	8"
E945P	E945PX	5"	1	8"
E945R	E945RX	6"	1	8"

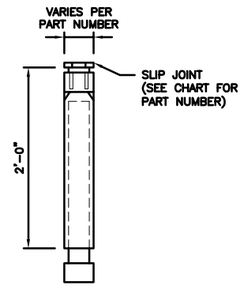

NOTE:
CONTRACTOR TO INSTALL EXPANSION FITTING SLIP JOINT AT METER CENTER CONDUIT TERMINATION, AS PER LOCAL UTILITY POLICY, ORDINANCE AND/OR SPECIFIED REQUIREMENT.

EXPANSION JOINT DETAIL | NO SCALE | 1

TRENCHING NOTES

1. CONTRACTOR SHALL RESTORE THE TRENCH TO ITS ORIGINAL CONDITIONS BY EITHER SEEDING OR SODDING GRASS AREAS, OR REPLACING ASPHALT OR CONCRETE AREAS TO ITS ORIGINAL CROSS SECTION.
2. TRENCHING SAFETY; INCLUDING, BUT NOT LIMITED TO SOIL CLASSIFICATION, SLOPING, AND SHORING, SHALL BE GOVERNED BY THE CURRENT OSHA TRENCHING AND EXCAVATION SAFETY STANDARDS.
3. ALL CONDUITS SHALL BE INSTALLED IN COMPLIANCE WITH THE CURRENT NATIONAL ELECTRIC CODE (NEC) OR AS REQUIRED BY THE LOCAL JURISDICTION, WHICHEVER IS THE MOST STRINGENT.

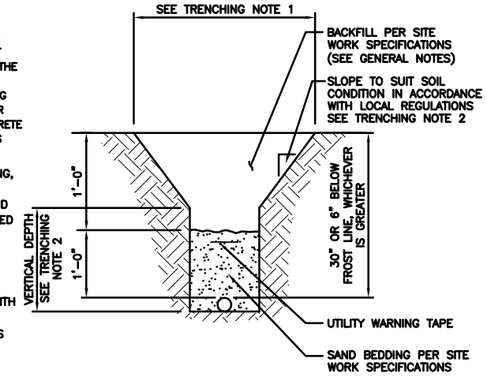

TYPICAL UNDERGROUND TRENCH DETAIL | NO SCALE | 2

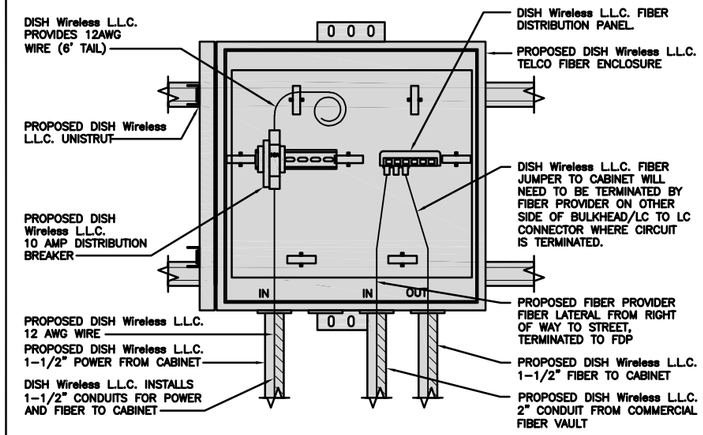

DARK TELCO BOX – INTERIOR WIRING LAYOUT | NO SCALE | 3

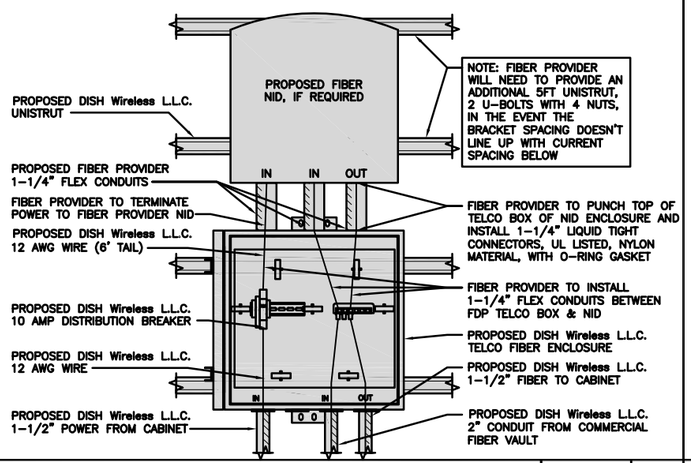

LIT TELCO BOX – INTERIOR WIRING LAYOUT (OPTIONAL) | NO SCALE | 4

NOT USED | NO SCALE | 5

NOT USED | NO SCALE | 6

NOT USED | NO SCALE | 7

NOT USED | NO SCALE | 8

NOT USED | NO SCALE | 9

RELEASED FOR CONSTRUCTION
As Noted on Plans Review

Development Services Department
Lee's Summit, Missouri

11/08/2021

dish wireless.
5701 SOUTH SANTA FE DRIVE
LITTLETON, CO 80120

AMERICAN TOWER®

LAB
49030 Pontiac Trail, Suite 400
Wixom, Michigan 48393
PHONE: (248) 705-9212

STATE OF MISSOURI
PETER B. LICHOMSKI
NUMBER A-2015003119
ARCHITECT

IT IS A VIOLATION OF LAW FOR ANY PERSON, UNLESS THEY ARE ACTING UNDER THE DIRECTION OF A LICENSED PROFESSIONAL ENGINEER, TO ALTER THIS DOCUMENT.

DRAWN BY:	CHECKED BY:	APPROVED BY:
RC	PL	---

RFDS REV #: N/A

CONSTRUCTION DOCUMENTS

SUBMITTALS

REV	DATE	DESCRIPTION
A	07/28/2021	ISSUED FOR REVIEW
0	09/23/2021	ISSUED FOR CONSTRUCTION

A&E PROJECT NUMBER
306042

DISH Wireless L.L.C.
PROJECT INFORMATION
KCMCI00155B
1204 N.E. WOODS CHAPEL ROAD
LEES SUMMIT, MO 64064

SHEET TITLE
ELECTRICAL DETAILS

SHEET NUMBER
E-2

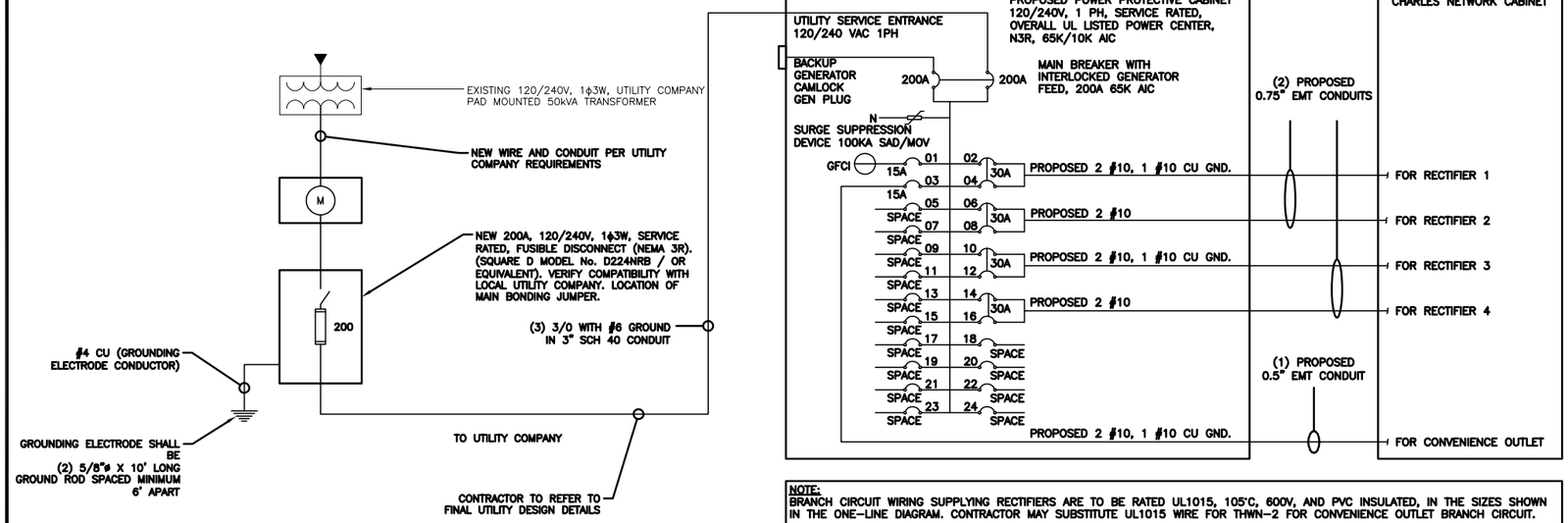

NOTE:
BRANCH CIRCUIT WIRING SUPPLYING RECTIFIERS ARE TO BE RATED UL1015, 105°C, 600V, AND PVC INSULATED, IN THE SIZES SHOWN IN THE ONE-LINE DIAGRAM. CONTRACTOR MAY SUBSTITUTE UL1015 WIRE FOR THHN-2 FOR CONVENIENCE OUTLET BRANCH CIRCUIT.

BREAKERS REQUIRED:
(4) 30A, 2P BREAKER – SQUARE D P/N:QO230
(1) 15A, 1P BREAKER – SQUARE D P/N:QO115

NOTES

THE ENGINEER OF RECORD HAS PERFORMED ALL REQUIRED SHORT CIRCUIT CALCULATIONS AND THE AIC RATINGS FOR EACH DEVICE IS ADEQUATE TO PROTECT THE EQUIPMENT AND THE ELECTRICAL SYSTEM.

THE ENGINEER OF RECORD HAS PERFORMED ALL REQUIRED VOLTAGE DROP CALCULATIONS AND ALL BRANCH CIRCUIT AND FEEDERS COMPLY WITH THE NEC (LISTED ON T-1) ARTICLE 210.19(A)(1) FPN NO. 4.

THE (2) CONDUITS WITH (4) CURRENT CARRYING CONDUCTORS EACH, SHALL APPLY THE ADJUSTMENT FACTOR OF 80% PER 2014/17 NEC TABLE 310.15(B)(3)(a) OR 2020 NEC TABLE 310.15(C)(1) FOR UL1015 WIRE.

#12 FOR 15A–20A/1P BREAKER: 0.8 x 30A = 24.0A
#10 FOR 25A–30A/2P BREAKER: 0.8 x 40A = 32.0A
#8 FOR 35A–40A/2P BREAKER: 0.8 x 55A = 44.0A
#6 FOR 45A–60A/2P BREAKER: 0.8 x 75A = 60.0A

CONDUIT SIZING: AT 40% FILL PER NEC CHAPTER 9, TABLE 4, ARTICLE 358.
0.5" CONDUIT – 0.122 SQ. IN AREA
0.75" CONDUIT – 0.213 SQ. IN AREA
2.0" CONDUIT – 1.316 SQ. IN AREA
3.0" CONDUIT – 2.907 SQ. IN AREA

CABINET CONVENIENCE OUTLET CONDUCTORS (1 CONDUIT): USING THWN-2, CU.

#10 – 0.0211 SQ. IN X 2 = 0.0422 SQ. IN
#10 – 0.0211 SQ. IN X 1 = 0.0211 SQ. IN <GROUND
TOTAL = 0.0633 SQ. IN

0.5" EMT CONDUIT IS ADEQUATE TO HANDLE THE TOTAL OF (3) WIRES, INCLUDING GROUND WIRE, AS INDICATED ABOVE.

RECTIFIER CONDUCTORS (2 CONDUITS): USING UL1015, CU.

#10 – 0.0266 SQ. IN X 4 = 0.1064 SQ. IN
#10 – 0.0082 SQ. IN X 1 = 0.0082 SQ. IN <BARE GROUND
TOTAL = 0.1146 SQ. IN

0.75" EMT CONDUIT IS ADEQUATE TO HANDLE THE TOTAL OF (5) WIRES, INCLUDING GROUND WIRE, AS INDICATED ABOVE.

PPC FEED CONDUCTORS (1 CONDUIT): USING THWN, CU.

3/0 – 0.2679 SQ. IN X 3 = 0.8037 SQ. IN
#6 – 0.0507 SQ. IN X 1 = 0.0507 SQ. IN <GROUND
TOTAL = 0.8544 SQ. IN

3.0" SCH 40 PVC CONDUIT IS ADEQUATE TO HANDLE THE TOTAL OF (4) WIRES, INCLUDING GROUND WIRE, AS INDICATED ABOVE.

PPC ONE-LINE DIAGRAM

NO SCALE | 1

PROPOSED CHARLES PANEL SCHEDULE

LOAD SERVED	VOLT AMPS (WATTS) L1	VOLT AMPS (WATTS) L2	TRIP	CKT #	PHASE		CKT #	TRIP	VOLT AMPS (WATTS) L1	VOLT AMPS (WATTS) L2	LOAD SERVED
PPC GFCI OUTLET	180		15A	1	A		2	30A	2880		ABB/GE INFINITY RECTIFIER 1
CHARLES GFCI OUTLET		180	15A	3	B		4			2880	
–SPACE–				5	A		6	30A	2880		ABB/GE INFINITY RECTIFIER 2
–SPACE–				7	B		8			2880	
–SPACE–				9	A		10	30A	2880		ABB/GE INFINITY RECTIFIER 3
–SPACE–				11	B		12			2880	
–SPACE–				13	A		14	30A	2880		ABB/GE INFINITY RECTIFIER 4
–SPACE–				15	B		16			2880	
–SPACE–				17	A		18				–SPACE–
–SPACE–				19	B		20				–SPACE–
–SPACE–				21	A		22				–SPACE–
–SPACE–				23	B		24				–SPACE–
VOLTAGE AMPS	180	180							11520	11520	
200A MCB, 1ϕ, 24 SPACE, 120/240V			L1		L2						
MB RATING: 65,000 AIC			11700		11700		VOLTAGE AMPS				
			98		98		AMPS				
			98				MAX AMPS				
			123				MAX 125%				

PANEL SCHEDULE

NO SCALE | 2

RELEASED FOR CONSTRUCTION
As Noted on Plans Review

Development Services Department
Lee's Summit, Missouri

11/08/2021

NOT USED

NO SCALE | 3

dish wireless.
5701 SOUTH SANTA FE DRIVE
LITTLETON, CO 80120

AMERICAN TOWER®

LAB
49030 Pontiac Trail, Suite 400
Wixom, Michigan 48393
PHONE: (248) 705-9212

STATE OF MISSOURI
PETER P. LICHOMSKI
NUMBER A-2015003119
ARCHITECT

IT IS A VIOLATION OF LAW FOR ANY PERSON, UNLESS THEY ARE ACTING UNDER THE DIRECTION OF A LICENSED PROFESSIONAL ENGINEER, TO ALTER THIS DOCUMENT.

DRAWN BY:	CHECKED BY:	APPROVED BY:
RC	PL	---

RFDS REV #: N/A

CONSTRUCTION DOCUMENTS

SUBMITTALS

REV	DATE	DESCRIPTION
A	07/28/2021	ISSUED FOR REVIEW
0	09/23/2021	ISSUED FOR CONSTRUCTION

A&E PROJECT NUMBER
306042

DISH Wireless L.L.C.
PROJECT INFORMATION
KCMCI00155B
1204 N.E. WOODS CHAPEL ROAD
LEES SUMMIT, MO 64064

SHEET TITLE
ELECTRICAL ONE-LINE, FAULT CALCS & PANEL SCHEDULE

SHEET NUMBER
E-3

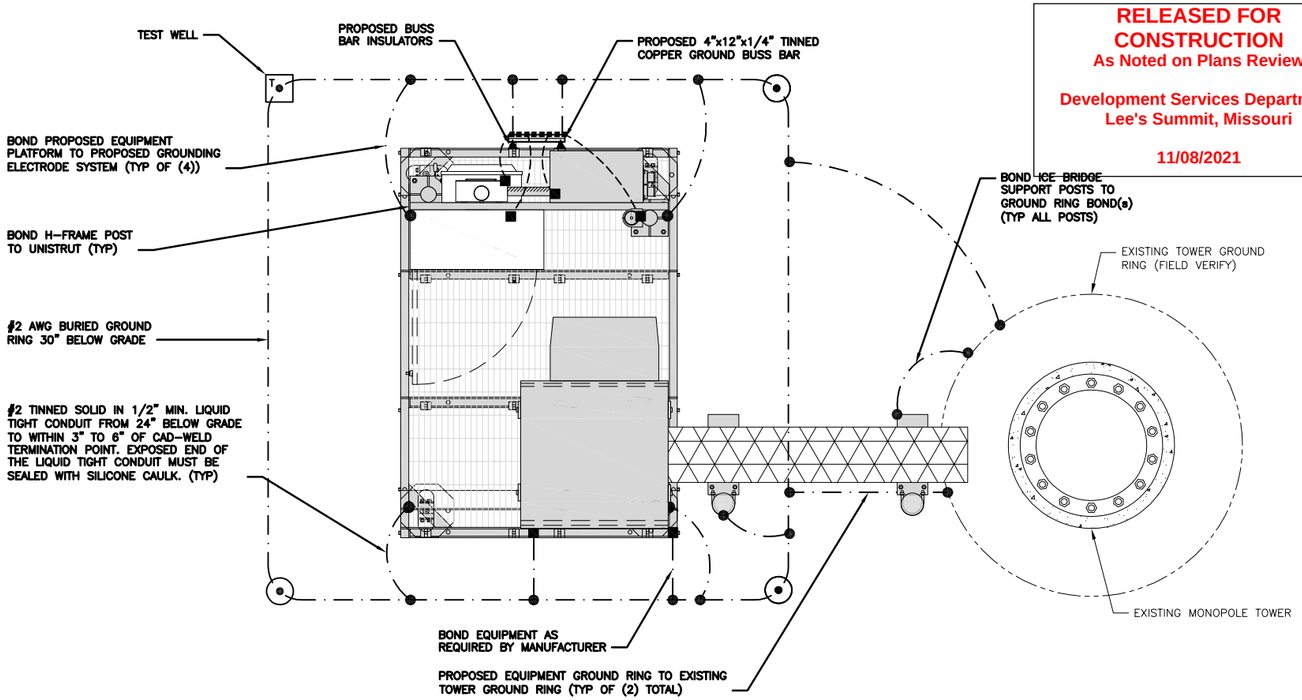

RELEASED FOR CONSTRUCTION
As Noted on Plans Review

Development Services Department
Lee's Summit, Missouri

11/08/2021

TYPICAL EQUIPMENT GROUNDING PLAN

NO SCALE | 1

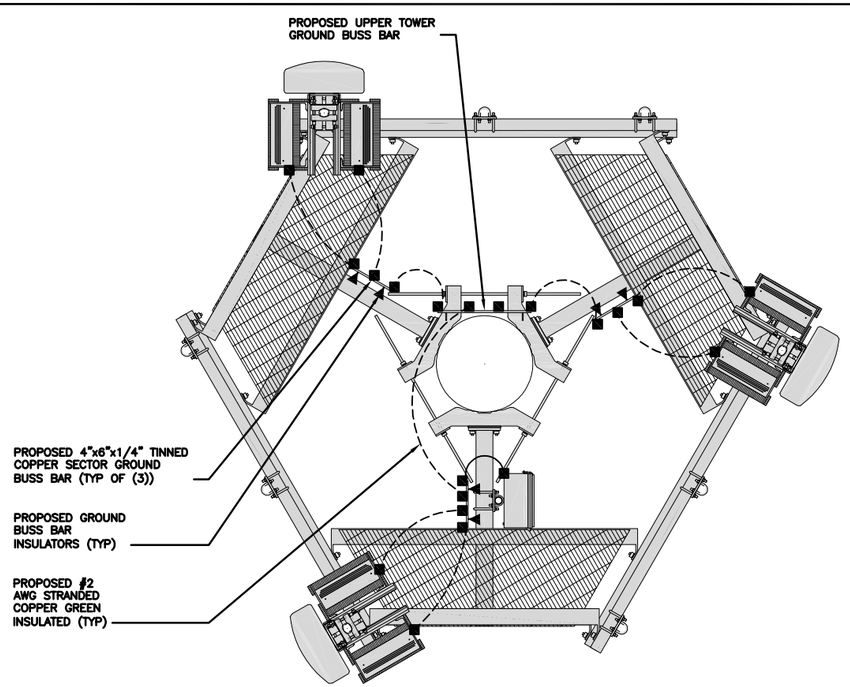

NOTES

ANTENNAS AND OVP SHOWN ARE GENERIC AND NOT REFERENCING TO A SPECIFIC MANUFACTURER. THIS LAYOUT IS FOR REFERENCE PURPOSES ONLY

TYPICAL ANTENNA GROUNDING PLAN

NO SCALE | 2

- EXOTHERMIC CONNECTION
- MECHANICAL CONNECTION
- GROUND BUS BAR
- GROUND ROD
- TEST GROUND ROD WITH INSPECTION SLEEVE
- #6 AWG STRANDED & INSULATED
- #2 AWG SOLID COPPER TINNED
- BUSS BAR INSULATOR

GROUNDING LEGEND

1. GROUNDING IS SHOWN DIAGRAMMATICALLY ONLY.
2. CONTRACTOR SHALL GROUND ALL EQUIPMENT AS A COMPLETE SYSTEM. GROUNDING SHALL BE IN COMPLIANCE WITH NEC SECTION 250 AND DISH Wireless L.L.C. GROUNDING AND BONDING REQUIREMENTS AND MANUFACTURER'S SPECIFICATIONS.
3. ALL GROUND CONDUCTORS SHALL BE COPPER; NO ALUMINUM CONDUCTORS SHALL BE USED.

GROUNDING KEY NOTES

(A) EXTERIOR GROUND RING: #2 AWG SOLID COPPER, BURIED AT A DEPTH OF AT LEAST 30 INCHES BELOW GRADE, OR 6 INCHES BELOW THE FROST LINE AND APPROXIMATELY 24 INCHES FROM THE EXTERIOR WALL OR FOOTING.

(B) TOWER GROUND RING: THE GROUND RING SYSTEM SHALL BE INSTALLED AROUND AN ANTENNA TOWER'S LEGS, AND/OR GUY ANCHORS. WHERE SEPARATE SYSTEMS HAVE BEEN PROVIDED FOR THE TOWER AND THE BUILDING, AT LEAST TWO BONDS SHALL BE MADE BETWEEN THE TOWER RING GROUND SYSTEM AND THE BUILDING RING GROUND SYSTEM USING MINIMUM #2 AWG SOLID COPPER CONDUCTORS.

(C) INTERIOR GROUND RING: #2 AWG STRANDED GREEN INSULATED COPPER CONDUCTOR EXTENDED AROUND THE PERIMETER OF THE EQUIPMENT AREA. ALL NON-TELECOMMUNICATIONS RELATED METALLIC OBJECTS FOUND WITHIN A SITE SHALL BE GROUNDED TO THE INTERIOR GROUND RING WITH #6 AWG STRANDED GREEN INSULATED CONDUCTOR.

(D) BOND TO INTERIOR GROUND RING: #2 AWG SOLID TINNED COPPER WIRE PRIMARY BONDS SHALL BE PROVIDED AT LEAST AT FOUR POINTS ON THE INTERIOR GROUND RING, LOCATED AT THE CORNERS OF THE BUILDING.

(E) GROUND ROD: UL LISTED COPPER CLAD STEEL. MINIMUM 1/2" DIAMETER BY EIGHT FEET LONG. GROUND RODS SHALL BE INSTALLED WITH INSPECTION SLEEVES. GROUND RODS SHALL BE DRIVEN TO THE DEPTH OF GROUND RING CONDUCTOR.

(F) CELL REFERENCE GROUND BAR: POINT OF GROUND REFERENCE FOR ALL COMMUNICATIONS EQUIPMENT FRAMES. ALL BONDS ARE MADE WITH #2 AWG UNLESS NOTED OTHERWISE STRANDED GREEN INSULATED COPPER CONDUCTORS. BOND TO GROUND RING WITH (2) #2 SOLID TINNED COPPER CONDUCTORS.

(G) HATCH PLATE GROUND BAR: BOND TO THE INTERIOR GROUND RING WITH TWO #2 AWG STRANDED GREEN INSULATED COPPER CONDUCTORS. WHEN A HATCH-PLATE AND A CELL REFERENCE GROUND BAR ARE BOTH PRESENT, THE CRGB MUST BE CONNECTED TO THE HATCH-PLATE AND TO THE INTERIOR GROUND RING USING (2) TWO #2 AWG STRANDED GREEN INSULATED COPPER CONDUCTORS EACH.

(H) EXTERIOR CABLE ENTRY PORT GROUND BARS: LOCATED AT THE ENTRANCE TO THE CELL SITE BUILDING. BOND TO GROUND RING WITH A #2 AWG SOLID TINNED COPPER CONDUCTORS WITH AN EXOTHERMIC WELD AND INSPECTION SLEEVE.

(I) TELCO GROUND BAR: BOND TO BOTH CELL REFERENCE GROUND BAR OR EXTERIOR GROUND RING.

(J) FRAME BONDING: THE BONDING POINT FOR TELECOM EQUIPMENT FRAMES SHALL BE THE GROUND BUS THAT IS NOT ISOLATED FROM THE EQUIPMENTS METAL FRAMEWORK.

(K) INTERIOR UNIT BONDS: METAL FRAMES, CABINETS AND INDIVIDUAL METALLIC UNITS LOCATED WITH THE AREA OF THE INTERIOR GROUND RING REQUIRE A #6 AWG STRANDED GREEN INSULATED COPPER BOND TO THE INTERIOR GROUND RING.

(L) FENCE AND GATE GROUNDING: METAL FENCES WITHIN 7 FEET OF THE EXTERIOR GROUND RING OR OBJECTS BONDED TO THE EXTERIOR GROUND RING SHALL BE BONDED TO THE GROUND RING WITH A #2 AWG SOLID TINNED COPPER CONDUCTOR AT AN INTERVAL NOT EXCEEDING 25 FEET. BONDS SHALL BE MADE AT EACH GATE POST AND ACROSS GATE OPENINGS.

(M) EXTERIOR UNIT BONDS: METALLIC OBJECTS, EXTERNAL TO OR MOUNTED TO THE BUILDING, SHALL BE BONDED TO THE EXTERIOR GROUND RING. USING #2 TINNED SOLID COPPER WIRE

(N) ICE BRIDGE SUPPORTS: EACH ICE BRIDGE LEG SHALL BE BONDED TO THE GROUND RING WITH #2 AWG BARE TINNED COPPER CONDUCTOR. PROVIDE EXOTHERMIC WELDS AT BOTH THE ICE BRIDGE LEG AND BURIED GROUND RING.

(O) DURING ALL DC POWER SYSTEM CHANGES INCLUDING DC SYSTEM CHANGE OUTS, RECTIFIER REPLACEMENTS OR ADDITIONS, BREAKER DISTRIBUTION CHANGES, BATTERY ADDITIONS, BATTERY REPLACEMENTS AND INSTALLATIONS OR CHANGES TO DC CONVERTER SYSTEMS IT SHALL BE REQUIRED THAT SERVICE CONTRACTORS VERIFY ALL DC POWER SYSTEMS ARE EQUIPPED WITH A MASTER DC SYSTEM RETURN GROUND CONDUCTOR FROM THE DC POWER SYSTEM COMMON RETURN BUS DIRECTLY CONNECTED TO THE CELL SITE REFERENCE GROUND BAR

(P) TOWER TOP COLLECTOR BUSS BAR IS TO BE MECHANICALLY BONDED TO TOWER STEEL.

REFER TO DISH Wireless L.L.C. GROUNDING NOTES.

GROUNDING KEY NOTES

NO SCALE | 3

dish wireless.
5701 SOUTH SANTA FE DRIVE
LITTLETON, CO 80120

AMERICAN TOWER®

LAB
49030 Pontiac Trail, Suite 400
Wixom, Michigan 48393
PHONE: (248) 705-9212

STATE OF MISSOURI
PETER P. LICHOMSKI
NUMBER A-2015003119
ARCHITECT

IT IS A VIOLATION OF LAW FOR ANY PERSON, UNLESS THEY ARE ACTING UNDER THE DIRECTION OF A LICENSED PROFESSIONAL ENGINEER, TO ALTER THIS DOCUMENT.

DRAWN BY:	CHECKED BY:	APPROVED BY:
RC	PL	---

RFDS REV #: N/A

CONSTRUCTION DOCUMENTS

SUBMITTALS

REV	DATE	DESCRIPTION
A	07/28/2021	ISSUED FOR REVIEW
0	09/23/2021	ISSUED FOR CONSTRUCTION

A&E PROJECT NUMBER
306042

DISH Wireless L.L.C.
PROJECT INFORMATION
KCMCI00155B
1204 N.E. WOODS CHAPEL ROAD
LEES SUMMIT, MO 64064

SHEET TITLE
GROUNDING PLANS AND NOTES

SHEET NUMBER
G-1

NOTES

EQUIPMENT CABINET OMITTED FOR CLARITY

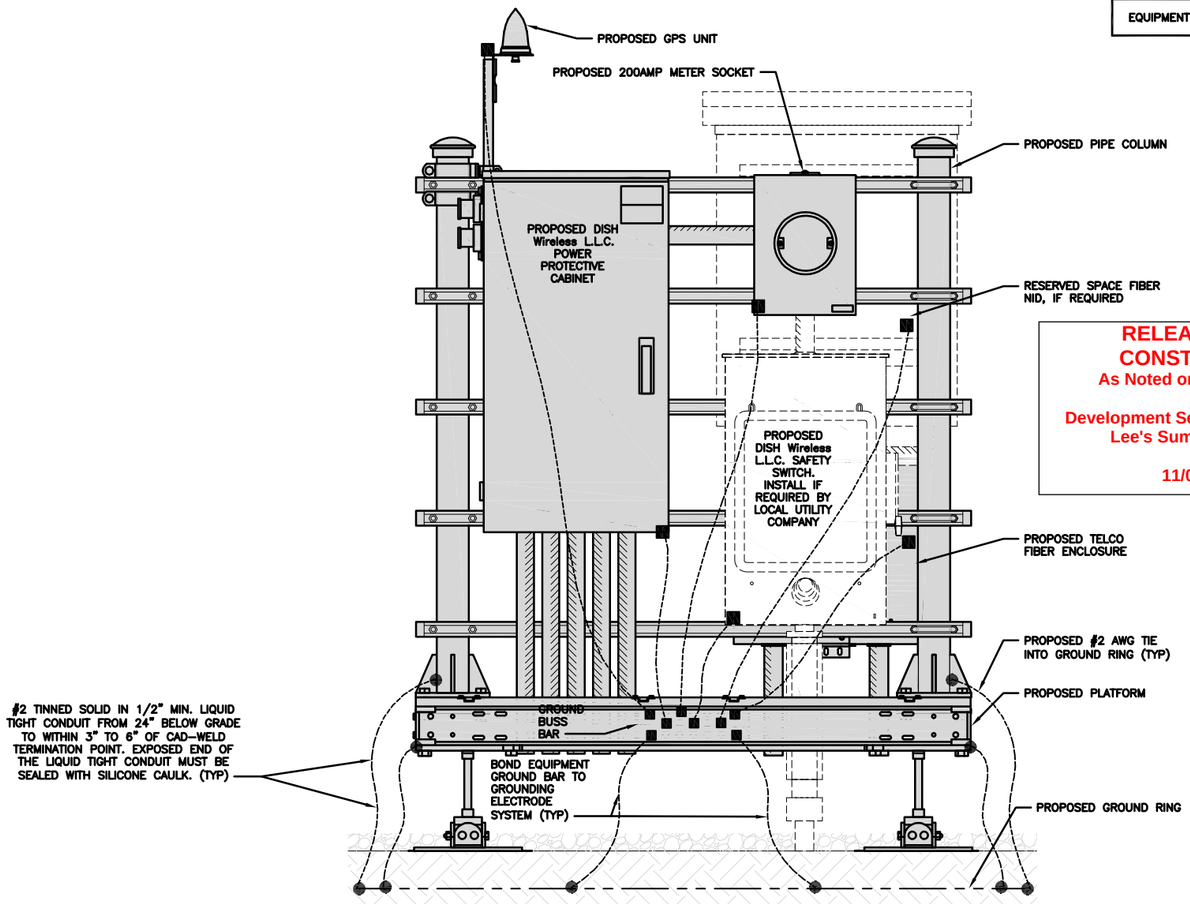

RELEASED FOR CONSTRUCTION
As Noted on Plans Review

Development Services Department
Lee's Summit, Missouri

11/08/2021

H-FRAME GROUNDING DETAIL | NO SCALE | 1

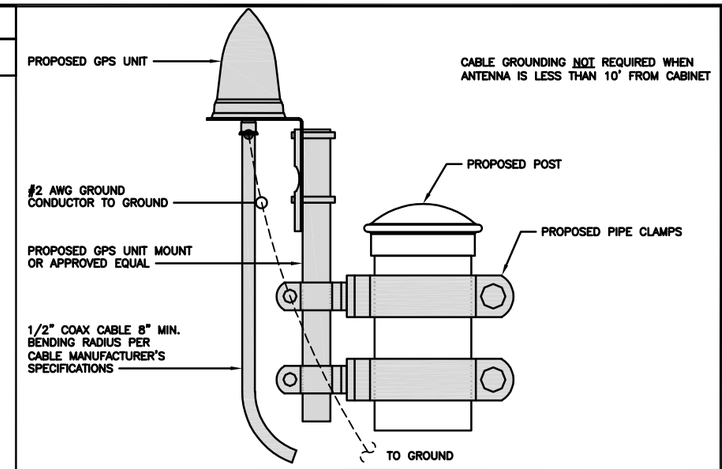

TYPICAL GPS UNIT GROUNDING | NO SCALE | 2

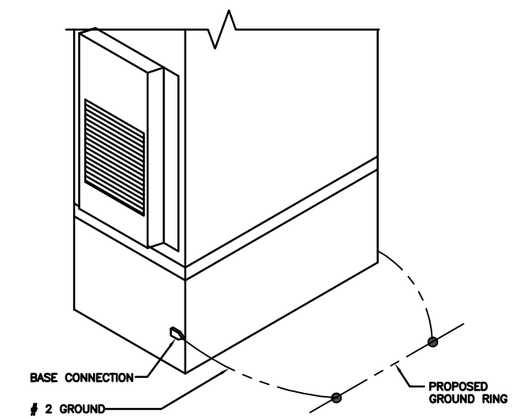

OUTDOOR CABINET GROUNDING | NO SCALE | 3

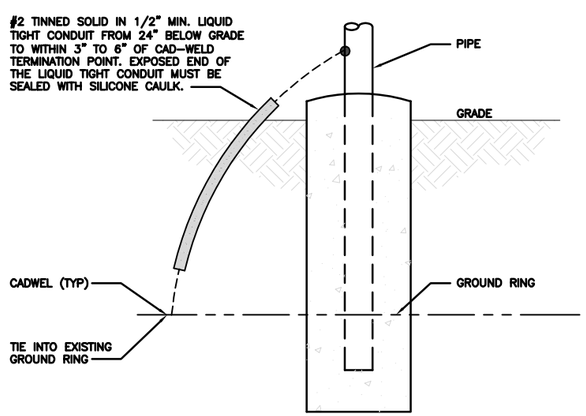

TRANSITIONING GROUND DETAIL | NO SCALE | 4

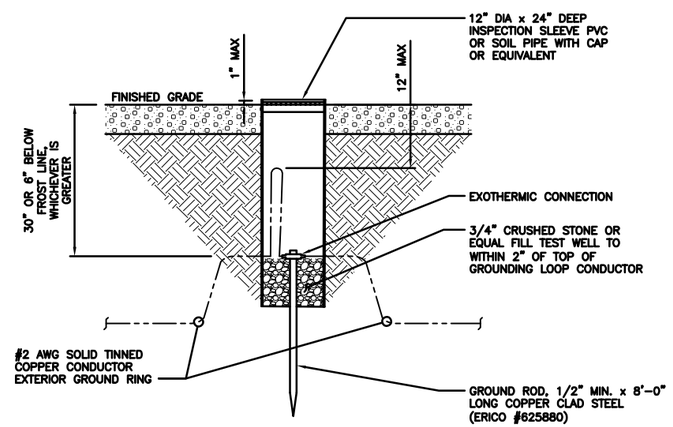

TYPICAL TEST GROUND ROD WITH INSPECTION SLEEVE | NO SCALE | 5

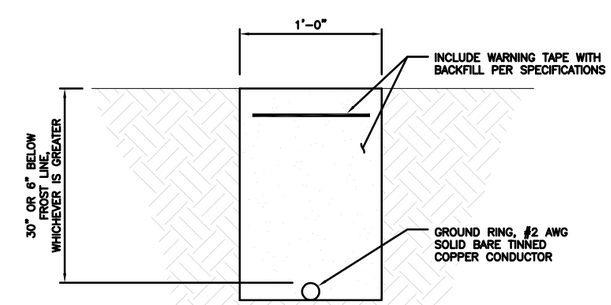

TYPICAL GROUND RING TRENCH | NO SCALE | 6

dish wireless.
5701 SOUTH SANTA FE DRIVE
LITTLETON, CO 80120

AMERICAN TOWER

LAB
49030 Pontiac Trail, Suite 400
Wixom, Michigan 48393
PHONE: (248) 705-9212

STATE OF MISSOURI
PETER P. LICHOMSKI
NUMBER A-2015003119
ARCHITECT

IT IS A VIOLATION OF LAW FOR ANY PERSON, UNLESS THEY ARE ACTING UNDER THE DIRECTION OF A LICENSED PROFESSIONAL ENGINEER, TO ALTER THIS DOCUMENT.

DRAWN BY:	CHECKED BY:	APPROVED BY:
RC	PL	---

RFDS REV #: N/A

CONSTRUCTION DOCUMENTS

SUBMITTALS

REV	DATE	DESCRIPTION
A	07/28/2021	ISSUED FOR REVIEW
0	09/23/2021	ISSUED FOR CONSTRUCTION

A&E PROJECT NUMBER
306042

DISH Wireless L.L.C.
PROJECT INFORMATION
KCMCI00155B
1204 N.E. WOODS CHAPEL ROAD
LEES SUMMIT, MO 64064

SHEET TITLE
GROUNDING DETAILS

SHEET NUMBER
G-2

1. EXOTHERMIC WELD (2) TWO, #2 AWG BARE TINNED SOLID COPPER CONDUCTORS TO GROUND BAR. ROUTE CONDUCTORS TO BURIED GROUND RING AND PROVIDE PARALLEL EXOTHERMIC WELD.
2. ALL EXTERIOR GROUNDING HARDWARE SHALL BE STAINLESS STEEL 3/8" DIAMETER OR LARGER. ALL HARDWARE 18-8 STAINLESS STEEL INCLUDING LOCK WASHERS, COAT ALL SURFACES WITH AN ANTI-OXIDANT COMPOUND BEFORE MATING.
3. FOR GROUND BOND TO STEEL ONLY: COAT ALL SURFACES WITH AN ANTI-OXIDANT COMPOUND BEFORE MATING.
4. DO NOT INSTALL CABLE GROUNDING KIT AT A BEND AND ALWAYS DIRECT GROUND CONDUCTOR DOWN TO GROUNDING BUS.
5. NUT & WASHER SHALL BE PLACED ON THE FRONT SIDE OF THE GROUND BAR AND BOLTED ON THE BACK SIDE.
6. ALL GROUNDING PARTS AND EQUIPMENT TO BE SUPPLIED AND INSTALLED BY CONTRACTOR.
7. THE CONTRACTOR SHALL BE RESPONSIBLE FOR INSTALLING ADDITIONAL GROUND BAR AS REQUIRED.
8. ENSURE THE WIRE INSULATION TERMINATION IS WITHIN 1/8" OF THE BARREL (NO SHINERS).

TYPICAL GROUNDING NOTES | NO SCALE | 1

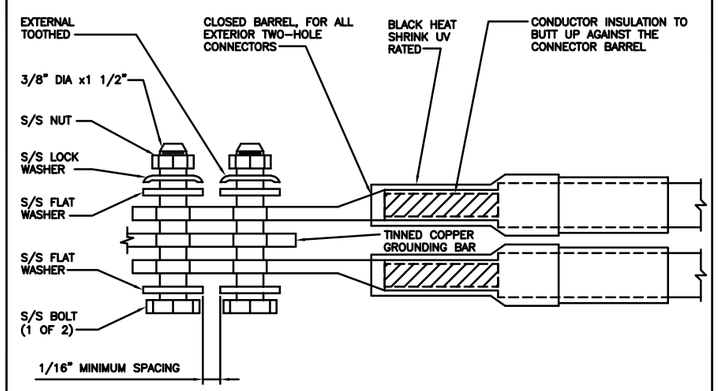

TYPICAL EXTERIOR TWO HOLE LUG | NO SCALE | 2

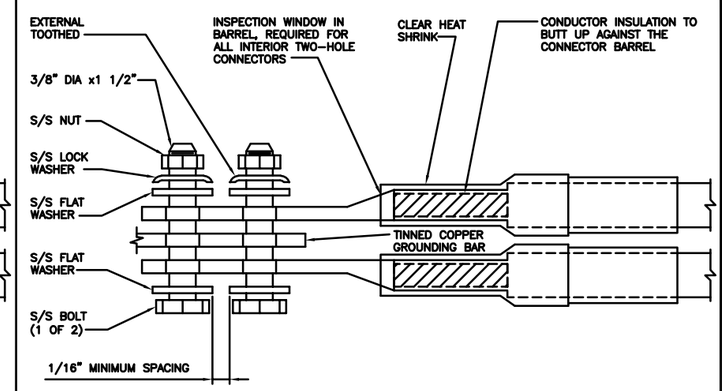

TYPICAL INTERIOR TWO HOLE LUG | NO SCALE | 3

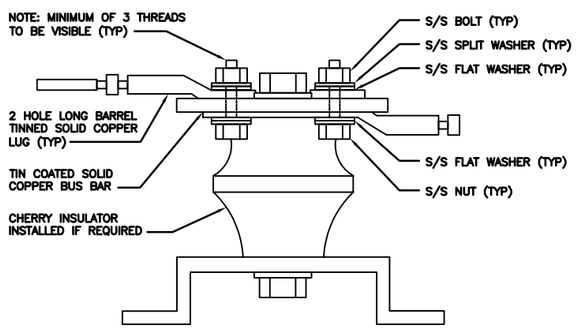

LUG DETAIL | NO SCALE | 4

NOT USED | NO SCALE | 5

NOT USED | NO SCALE | 6

NOT USED | NO SCALE | 7

NOT USED | NO SCALE | 8

NOT USED | NO SCALE | 9

RELEASED FOR CONSTRUCTION
As Noted on Plans Review

Development Services Department
Lee's Summit, Missouri

11/08/2021

dish wireless.
5701 SOUTH SANTA FE DRIVE
LITTLETON, CO 80120

AMERICAN TOWER®

LAB
49030 Pontiac Trail, Suite 400
Wixom, Michigan 48393
PHONE: (248) 705-9212

STATE OF MISSOURI
PETER P. LICHOMSKI
NUMBER A-2015000119
ARCHITECT

IT IS A VIOLATION OF LAW FOR ANY PERSON, UNLESS THEY ARE ACTING UNDER THE DIRECTION OF A LICENSED PROFESSIONAL ENGINEER, TO ALTER THIS DOCUMENT.

DRAWN BY:	CHECKED BY:	APPROVED BY:
RC	PL	---

RFDS REV #: N/A

CONSTRUCTION DOCUMENTS

SUBMITTALS

REV	DATE	DESCRIPTION
A	07/28/2021	ISSUED FOR REVIEW
0	09/23/2021	ISSUED FOR CONSTRUCTION

A&E PROJECT NUMBER
306042

DISH Wireless L.L.C.
PROJECT INFORMATION
KCMCI00155B
1204 N.E. WOODS CHAPEL ROAD
LEES SUMMIT, MO 64064

SHEET TITLE
GROUNDING DETAILS

SHEET NUMBER
G-3

RF JUMPER COLOR CODING

3/4" TAPE WIDTHS WITH 3/4" SPACING

LOW-BAND RRH –
(600MHz N71 BASEBAND) +
(850MHz N26 BAND) +
(700MHz N29 BAND) – OPTIONAL PER MARKET

ADD FREQUENCY COLOR TO SECTOR BAND
(CBRS WILL USE YELLOW BANDS)

ALPHA RRH				BETA RRH				GAMMA RRH			
PORT 1 + SLANT	PORT 2 – SLANT	PORT 3 + SLANT	PORT 4 – SLANT	PORT 1 + SLANT	PORT 2 – SLANT	PORT 3 + SLANT	PORT 4 – SLANT	PORT 1 + SLANT	PORT 2 – SLANT	PORT 3 + SLANT	PORT 4 – SLANT
RED	RED	RED	RED	BLUE	BLUE	BLUE	BLUE	GREEN	GREEN	GREEN	GREEN
ORANGE	ORANGE	RED	RED	ORANGE	ORANGE	BLUE	BLUE	ORANGE	ORANGE	GREEN	GREEN
	WHITE (–) PORT	ORANGE	ORANGE		WHITE (–) PORT	ORANGE	ORANGE		WHITE (–) PORT	ORANGE	ORANGE
			WHITE (–) PORT				WHITE (–) PORT				WHITE (–) PORT

MID-BAND RRH –
(AWS BANDS N66+N70)

ADD FREQUENCY COLOR TO SECTOR BAND
(CBRS WILL USE YELLOW BANDS)

RED	RED	RED	RED	BLUE	BLUE	BLUE	BLUE	GREEN	GREEN	GREEN	GREEN
PURPLE	PURPLE	RED	RED	PURPLE	PURPLE	BLUE	BLUE	PURPLE	PURPLE	GREEN	GREEN
	WHITE (–) PORT	PURPLE	PURPLE		WHITE (–) PORT	PURPLE	PURPLE		WHITE (–) PORT	PURPLE	PURPLE
			WHITE (–) PORT				WHITE (–) PORT				WHITE (–) PORT

HYBRID/DISCREET CABLES

INCLUDE SECTOR BANDS BEING SUPPORTED ALONG WITH FREQUENCY BANDS

EXAMPLE 1 – HYBRID, OR DISCREET, SUPPORTS ALL SECTORS, BOTH LOW-BANDS AND MID-BANDS

EXAMPLE 2 – HYBRID, OR DISCREET, SUPPORTS CBRS ONLY, ALL SECTORS

EXAMPLE 1	EXAMPLE 2	EXAMPLE 3
RED	RED	RED
BLUE	BLUE	ORANGE
GREEN	GREEN	PURPLE
ORANGE	YELLOW	
PURPLE		

FIBER JUMPERS TO RRHs

LOW-BAND RRH FIBER CABLES HAVE SECTOR STRIPE ONLY

LOW BAND RRH	HIGH BAND RRH	LOW BAND RRH	HIGH BAND RRH	LOW BAND RRH	HIGH BAND RRH
RED	RED	BLUE	BLUE	GREEN	GREEN
	PURPLE		PURPLE		PURPLE

POWER CABLES TO RRHs

LOW-BAND RRH POWER CABLES HAVE SECTOR STRIPE ONLY

LOW BAND RRH	HIGH BAND RRH	LOW BAND RRH	HIGH BAND RRH	LOW BAND RRH	HIGH BAND RRH
RED	RED	BLUE	BLUE	GREEN	GREEN
	PURPLE		PURPLE		PURPLE

RET MOTORS AT ANTENNAS

ANTENNA 1 LOW BAND/ "IN"	ANTENNA 1 HIGH BAND/ "IN"	ANTENNA 1 LOW BAND/ "IN"	ANTENNA 1 HIGH BAND/ "IN"	ANTENNA 1 LOW BAND/ "IN"	ANTENNA 1 HIGH BAND/ "IN"
RED	RED	BLUE	BLUE	GREEN	GREEN
	PURPLE		PURPLE		PURPLE

MICROWAVE RADIO LINKS

LINKS WILL HAVE A 1.5–2 INCH WHITE WRAP WITH THE AZIMUTH COLOR OVERLAPPING IN THE MIDDLE. ADD ADDITIONAL SECTOR COLOR BANDS FOR EACH ADDITIONAL MW RADIO.

MICROWAVE CABLES WILL REQUIRE P-TOUCH LABELS INSIDE THE CABINET TO IDENTIFY THE LOCAL AND REMOTE SITE ID'S

FORWARD AZIMUTH OF 0–120 DEGREES		FORWARD AZIMUTH OF 120–240 DEGREES		FORWARD AZIMUTH OF 240–360 DEGREES	
PRIMARY	SECONDARY	PRIMARY	SECONDARY	PRIMARY	SECONDARY
WHITE	WHITE	WHITE	WHITE	WHITE	WHITE
RED	RED	BLUE	BLUE	GREEN	GREEN
WHITE	WHITE	WHITE	WHITE	WHITE	WHITE
	RED		BLUE		GREEN
	WHITE		WHITE		WHITE

RF CABLE COLOR CODES | NO SCALE | 1

LOW BANDS (N71+N26) OPTIONAL – (N29): ORANGE

AWS (N66+N70+H-BLOCK): PURPLE

CBRS TECH (3 GHz): YELLOW

NEGATIVE SLANT PORT ON ANT/RRH: WHITE

ALPHA SECTOR: RED

BETA SECTOR: BLUE

GAMMA SECTOR: GREEN

COLOR IDENTIFIER | NO SCALE | 2

NOT USED | NO SCALE | 3

NOT USED | NO SCALE | 4

RELEASED FOR CONSTRUCTION
As Noted on Plans Review

Development Services Department
Lee's Summit, Missouri

11/08/2021

dish wireless.
5701 SOUTH SANTA FE DRIVE
LITTLETON, CO 80120

AMERICAN TOWER®

LAB
49030 Pontiac Trail, Suite 400
Wixom, Michigan 48393
PHONE: (248) 705-9212

STATE OF MISSOURI
PETER B. LICHOMSKI
NUMBER A-2015003119
ARCHITECT

IT IS A VIOLATION OF LAW FOR ANY PERSON, UNLESS THEY ARE ACTING UNDER THE DIRECTION OF A LICENSED PROFESSIONAL ENGINEER, TO ALTER THIS DOCUMENT.

DRAWN BY:	CHECKED BY:	APPROVED BY:
RC	PL	---

RFDS REV #: N/A

CONSTRUCTION DOCUMENTS

SUBMITTALS

REV	DATE	DESCRIPTION
A	07/28/2021	ISSUED FOR REVIEW
0	09/23/2021	ISSUED FOR CONSTRUCTION

A&E PROJECT NUMBER
306042

DISH Wireless L.L.C.
PROJECT INFORMATION
KCMCI00155B
1204 N.E. WOODS CHAPEL ROAD
LEES SUMMIT, MO 64064

SHEET TITLE
RF
CABLE COLOR CODE

SHEET NUMBER
RF-1

EXOTHERMIC CONNECTION
MECHANICAL CONNECTION
BUSS BAR INSULATOR
CHEMICAL ELECTROLYTIC GROUNDING SYSTEM
TEST CHEMICAL ELECTROLYTIC GROUNDING SYSTEM
EXOTHERMIC WITH INSPECTION SLEEVE
GROUNDING BAR
GROUND ROD
TEST GROUND ROD WITH INSPECTION SLEEVE
SINGLE POLE SWITCH
DUPLEX RECEPTACLE
DUPLEX GFCI RECEPTACLE
FLUORESCENT LIGHTING FIXTURE (2) TWO LAMPS 48–T8
SMOKE DETECTION (DC)
EMERGENCY LIGHTING (DC)
SECURITY LIGHT W/PHOTOCELL LITHONIA ALXW LED–1–25A400/51K–SR4–120–PE–DDBTXD
CHAIN LINK FENCE
WOOD/WROUGHT IRON FENCE
WALL STRUCTURE
LEASE AREA
PROPERTY LINE (PL)
SETBACKS
ICE BRIDGE
CABLE TRAY
WATER LINE
UNDERGROUND POWER
UNDERGROUND TELCO
OVERHEAD POWER
OVERHEAD TELCO
UNDERGROUND TELCO/POWER
ABOVE GROUND POWER
ABOVE GROUND TELCO
ABOVE GROUND TELCO/POWER
WORKPOINT
SECTION REFERENCE
DETAIL REFERENCE

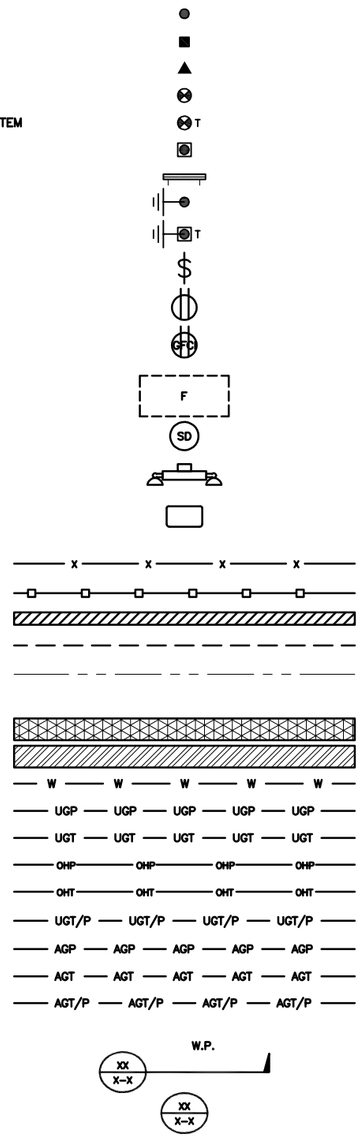

LEGEND

AB	ANCHOR BOLT
ABV	ABOVE
AC	ALTERNATING CURRENT
ADDL	ADDITIONAL
AFF	ABOVE FINISHED FLOOR
AFG	ABOVE FINISHED GRADE
AGL	ABOVE GROUND LEVEL
AIC	AMPERAGE INTERRUPTION CAPACITY
ALUM	ALUMINUM
ALT	ALTERNATE
ANT	ANTENNA
APPROX	APPROXIMATE
ARCH	ARCHITECTURAL
ATS	AUTOMATIC TRANSFER SWITCH
AWG	AMERICAN WIRE GAUGE
BATT	BATTERY
BLDG	BUILDING
BLK	BLOCK
BLKG	BLOCKING
BM	BEAM
BTC	BARE TINNED COPPER CONDUCTOR
BOF	BOTTOM OF FOOTING
CAB	CABINET
CANT	CANTILEVERED
CHG	CHARGING
CLG	CEILING
CLR	CLEAR
COL	COLUMN
COMM	COMMON
CONC	CONCRETE
CONSTR	CONSTRUCTION
DBL	DOUBLE
DC	DIRECT CURRENT
DEPT	DEPARTMENT
DF	DOUGLAS FIR
DIA	DIAMETER
DIAG	DIAGONAL
DIM	DIMENSION
DWG	DRAWING
DWL	DOWEL
EA	EACH
EC	ELECTRICAL CONDUCTOR
EL.	ELEVATION
ELEC	ELECTRICAL
EMT	ELECTRICAL METALLIC TUBING
ENG	ENGINEER
EQ	EQUAL
EXP	EXPANSION
EXT	EXTERIOR
EW	EACH WAY
FAB	FABRICATION
FF	FINISH FLOOR
FG	FINISH GRADE
FIF	FACILITY INTERFACE FRAME
FIN	FINISH(ED)
FLR	FLOOR
FDN	FOUNDATION
FOC	FACE OF CONCRETE
FOM	FACE OF MASONRY
FOS	FACE OF STUD
FOW	FACE OF WALL
FS	FINISH SURFACE
FT	FOOT
FTG	FOOTING
GA	GAUGE
GEN	GENERATOR
GFCI	GROUND FAULT CIRCUIT INTERRUPTER
GLB	GLUE LAMINATED BEAM
GLV	GALVANIZED
GPS	GLOBAL POSITIONING SYSTEM
GND	GROUND
GSM	GLOBAL SYSTEM FOR MOBILE
HDG	HOT DIPPED GALVANIZED
HDR	HEADER
HGR	HANGER
HVAC	HEAT/VENTILATION/AIR CONDITIONING
HT	HEIGHT
IGR	INTERIOR GROUND RING
IN	INCH
INT	INTERIOR
LB(S)	POUND(S)
LF	LINEAR FEET
LTE	LONG TERM EVOLUTION
MAS	MASONRY
MAX	MAXIMUM
MB	MACHINE BOLT
MECH	MECHANICAL
MFR	MANUFACTURER
MGB	MASTER GROUND BAR
MIN	MINIMUM
MISC	MISCELLANEOUS
MTL	METAL
MTS	MANUAL TRANSFER SWITCH
MW	MICROWAVE
NEC	NATIONAL ELECTRIC CODE
NM	NEWTON METERS
NO.	NUMBER
#	NUMBER
NTS	NOT TO SCALE
OC	ON–CENTER
OSHA	OCCUPATIONAL SAFETY AND HEALTH ADMINISTRATION
OPNG	OPENING
P/C	PRECAST CONCRETE
PCS	PERSONAL COMMUNICATION SERVICES
PCU	PRIMARY CONTROL UNIT
PRC	PRIMARY RADIO CABINET
PP	POLARIZING PRESERVING
PSF	POUNDS PER SQUARE FOOT
PSI	POUNDS PER SQUARE INCH
PT	PRESSURE TREATED
PWR	POWER CABINET
QTY	QUANTITY
RAD	RADIUS
RECT	RECTIFIER
REF	REFERENCE
REINF	REINFORCEMENT
REQ'D	REQUIRED
RET	REMOTE ELECTRIC TILT
RF	RADIO FREQUENCY
RMC	RIGID METALLIC CONDUIT
RRH	REMOTE RADIO HEAD
RRU	REMOTE RADIO UNIT
RWY	RACEWAY
SCH	SCHEDULE
SHT	SHEET
SIAD	SMART INTEGRATED ACCESS DEVICE
SIM	SIMILAR
SPEC	SPECIFICATION
SQ	SQUARE
SS	STAINLESS STEEL
STD	STANDARD
STL	STEEL
TEMP	TEMPORARY
THK	THICKNESS
TMA	TOWER MOUNTED AMPLIFIER
TN	TOE NAIL
TOA	TOP OF ANTENNA
TOC	TOP OF CURB
TOF	TOP OF FOUNDATION
TOP	TOP OF PLATE (PARAPET)
TOS	TOP OF STEEL
TOW	TOP OF WALL
TVSS	TRANSIENT VOLTAGE SURGE SUPPRESSION
TYP	TYPICAL
UG	UNDERGROUND
UL	UNDERWRITERS LABORATORY
UNO	UNLESS NOTED OTHERWISE
UMTS	UNIVERSAL MOBILE TELECOMMUNICATIONS SYSTEM
UPS	UNITERRUPTIBLE POWER SYSTEM (DC POWER PLANT)
VIF	VERIFIED IN FIELD
W	WIDE
W/	WITH
WD	WOOD
WP	WEATHERPROOF
WT	WEIGHT

ABBREVIATIONS

RELEASED FOR CONSTRUCTION
As Noted on Plans Review

Development Services Department
Lee's Summit, Missouri

11/08/2021

dish wireless.
5701 SOUTH SANTA FE DRIVE
LITTLETON, CO 80120

AMERICAN TOWER®

LAB
49030 Pontiac Trail, Suite 400
Wixom, Michigan 48393
PHONE: (248) 705-9212

STATE OF MISSOURI
PETER D. LICHOMSKI
NUMBER A-2015009113
ARCHITECT

IT IS A VIOLATION OF LAW FOR ANY PERSON, UNLESS THEY ARE ACTING UNDER THE DIRECTION OF A LICENSED PROFESSIONAL ENGINEER, TO ALTER THIS DOCUMENT.

DRAWN BY:	CHECKED BY:	APPROVED BY:
RC	PL	---

RFDS REV #: N/A

CONSTRUCTION DOCUMENTS

SUBMITTALS

REV	DATE	DESCRIPTION
A	07/28/2021	ISSUED FOR REVIEW
0	09/23/2021	ISSUED FOR CONSTRUCTION

A&E PROJECT NUMBER
306042

DISH Wireless L.L.C.
PROJECT INFORMATION
KCMCI00155B
1204 N.E. WOODS CHAPEL ROAD
LEES SUMMIT, MO 64064

SHEET TITLE
LEGEND AND ABBREVIATIONS

SHEET NUMBER
GN-1

SITE ACTIVITY REQUIREMENTS:

1. NOTICE TO PROCEED – NO WORK SHALL COMMENCE PRIOR TO CONTRACTOR RECEIVING A WRITTEN NOTICE TO PROCEED (NTP) AND THE ISSUANCE OF A PURCHASE ORDER. PRIOR TO ACCESSING/ENTERING THE SITE YOU MUST CONTACT THE DISH Wireless L.L.C. AND TOWER OWNER NOC & THE DISH Wireless L.L.C. AND TOWER OWNER CONSTRUCTION MANAGER.

2. "LOOK UP" – DISH Wireless L.L.C. AND TOWER OWNER SAFETY CLIMB REQUIREMENT:

THE INTEGRITY OF THE SAFETY CLIMB AND ALL COMPONENTS OF THE CLIMBING FACILITY SHALL BE CONSIDERED DURING ALL STAGES OF DESIGN, INSTALLATION, AND INSPECTION. TOWER MODIFICATION, MOUNT REINFORCEMENTS, AND/OR EQUIPMENT INSTALLATIONS SHALL NOT COMPROMISE THE INTEGRITY OR FUNCTIONAL USE OF THE SAFETY CLIMB OR ANY COMPONENTS OF THE CLIMBING FACILITY ON THE STRUCTURE. THIS SHALL INCLUDE, BUT NOT BE LIMITED TO: PINCHING OF THE WIRE ROPE, BENDING OF THE WIRE ROPE FROM ITS SUPPORTS, DIRECT CONTACT OR CLOSE PROXIMITY TO THE WIRE ROPE WHICH MAY CAUSE FRICTIONAL WEAR, IMPACT TO THE ANCHORAGE POINTS IN ANY WAY, OR TO IMPEDE/BLOCK ITS INTENDED USE. ANY COMPROMISED SAFETY CLIMB, INCLUDING EXISTING CONDITIONS MUST BE TAGGED OUT AND REPORTED TO YOUR DISH Wireless L.L.C. AND DISH Wireless L.L.C. AND TOWER OWNER POC OR CALL THE NOC TO GENERATE A SAFETY CLIMB MAINTENANCE AND CONTRACTOR NOTICE TICKET.

3. PRIOR TO THE START OF CONSTRUCTION, ALL REQUIRED JURISDICTIONAL PERMITS SHALL BE OBTAINED. THIS INCLUDES, BUT IS NOT LIMITED TO, BUILDING, ELECTRICAL, MECHANICAL, FIRE, FLOOD ZONE, ENVIRONMENTAL, AND ZONING. AFTER ONSITE ACTIVITIES AND CONSTRUCTION ARE COMPLETED, ALL REQUIRED PERMITS SHALL BE SATISFIED AND CLOSED OUT ACCORDING TO LOCAL JURISDICTIONAL REQUIREMENTS.

4. ALL CONSTRUCTION MEANS AND METHODS; INCLUDING BUT NOT LIMITED TO, ERECTION PLANS, RIGGING PLANS, CLIMBING PLANS, AND RESCUE PLANS SHALL BE THE RESPONSIBILITY OF THE GENERAL CONTRACTOR RESPONSIBLE FOR THE EXECUTION OF THE WORK CONTAINED HEREIN, AND SHALL MEET ANSI/ASSE A10.48 (LATEST EDITION); FEDERAL, STATE, AND LOCAL REGULATIONS; AND ANY APPLICABLE INDUSTRY CONSENSUS STANDARDS RELATED TO THE CONSTRUCTION ACTIVITIES BEING PERFORMED. ALL RIGGING PLANS SHALL ADHERE TO ANSI/ASSE A10.48 (LATEST EDITION) AND DISH Wireless L.L.C. AND TOWER OWNER STANDARDS, INCLUDING THE REQUIRED INVOLVEMENT OF A QUALIFIED ENGINEER FOR CLASS IV CONSTRUCTION, TO CERTIFY THE SUPPORTING STRUCTURE(S) IN ACCORDANCE WITH ANSI/TIA–322 (LATEST EDITION).

5. ALL SITE WORK TO COMPLY WITH DISH Wireless L.L.C. AND TOWER OWNER INSTALLATION STANDARDS FOR CONSTRUCTION ACTIVITIES ON DISH Wireless L.L.C. AND TOWER OWNER TOWER SITE AND LATEST VERSION OF ANSI/TIA–1019–A–2012 "STANDARD FOR INSTALLATION, ALTERATION, AND MAINTENANCE OF ANTENNA SUPPORTING STRUCTURES AND ANTENNAS."

6. IF THE SPECIFIED EQUIPMENT CAN NOT BE INSTALLED AS SHOWN ON THESE DRAWINGS, THE CONTRACTOR SHALL PROPOSE AN ALTERNATIVE INSTALLATION FOR APPROVAL BY DISH Wireless L.L.C. AND TOWER OWNER PRIOR TO PROCEEDING WITH ANY SUCH CHANGE OF INSTALLATION.

7. ALL MATERIALS FURNISHED AND INSTALLED SHALL BE IN STRICT ACCORDANCE WITH ALL APPLICABLE CODES, REGULATIONS AND ORDINANCES. CONTRACTOR SHALL ISSUE ALL APPROPRIATE NOTICES AND COMPLY WITH ALL LAWS, ORDINANCES, RULES, REGULATIONS AND LAWFUL ORDERS OF ANY PUBLIC AUTHORITY REGARDING THE PERFORMANCE OF THE WORK. ALL WORK CARRIED OUT SHALL COMPLY WITH ALL APPLICABLE MUNICIPAL AND UTILITY COMPANY SPECIFICATIONS AND LOCAL JURISDICTIONAL CODES, ORDINANCES AND APPLICABLE REGULATIONS.

8. THE CONTRACTOR SHALL INSTALL ALL EQUIPMENT AND MATERIALS IN ACCORDANCE WITH MANUFACTURER'S RECOMMENDATIONS UNLESS SPECIFICALLY STATED OTHERWISE.

9. THE CONTRACTOR SHALL CONTACT UTILITY LOCATING SERVICES INCLUDING PRIVATE LOCATES SERVICES PRIOR TO THE START OF CONSTRUCTION.

10. ALL EXISTING ACTIVE SEWER, WATER, GAS, ELECTRIC AND OTHER UTILITIES WHERE ENCOUNTERED IN THE WORK, SHALL BE PROTECTED AT ALL TIMES AND WHERE REQUIRED FOR THE PROPER EXECUTION OF THE WORK, SHALL BE RELOCATED AS DIRECTED BY CONTRACTOR. EXTREME CAUTION SHOULD BE USED BY THE CONTRACTOR WHEN EXCAVATING OR DRILLING PIERS AROUND OR NEAR UTILITIES. CONTRACTOR SHALL PROVIDE SAFETY TRAINING FOR THE WORKING CREW. THIS WILL INCLUDE BUT NOT BE LIMITED TO A) FALL PROTECTION B) CONFINED SPACE C) ELECTRICAL SAFETY D) TRENCHING AND EXCAVATION E) CONSTRUCTION SAFETY PROCEDURES.

11. ALL SITE WORK SHALL BE AS INDICATED ON THE STAMPED CONSTRUCTION DRAWINGS AND DISH PROJECT SPECIFICATIONS, LATEST APPROVED REVISION.

12. CONTRACTOR SHALL KEEP THE SITE FREE FROM ACCUMULATING WASTE MATERIAL, DEBRIS, AND TRASH AT THE COMPLETION OF THE WORK. IF NECESSARY, RUBBISH, STUMPS, DEBRIS, STICKS, STONES AND OTHER REFUSE SHALL BE REMOVED FROM THE SITE AND DISPOSED OF LEGALLY.

13. ALL EXISTING INACTIVE SEWER, WATER, GAS, ELECTRIC AND OTHER UTILITIES, WHICH INTERFERE WITH THE EXECUTION OF THE WORK, SHALL BE REMOVED AND/OR CAPPED, PLUGGED OR OTHERWISE DISCONTINUED AT POINTS WHICH WILL NOT INTERFERE WITH THE EXECUTION OF THE WORK, SUBJECT TO THE APPROVAL OF DISH Wireless L.L.C. AND TOWER OWNER, AND/OR LOCAL UTILITIES.

14. THE CONTRACTOR SHALL PROVIDE SITE SIGNAGE IN ACCORDANCE WITH THE TECHNICAL SPECIFICATION FOR SITE SIGNAGE REQUIRED BY LOCAL JURISDICTION AND SIGNAGE REQUIRED ON INDIVIDUAL PIECES OF EQUIPMENT, ROOMS, AND SHELTERS.

15. THE SITE SHALL BE GRADED TO CAUSE SURFACE WATER TO FLOW AWAY FROM THE CARRIER'S EQUIPMENT AND TOWER AREAS.

16. THE SUB GRADE SHALL BE COMPACTED AND BROUGHT TO A SMOOTH UNIFORM GRADE PRIOR TO FINISHED SURFACE APPLICATION.

17. THE AREAS OF THE OWNERS PROPERTY DISTURBED BY THE WORK AND NOT COVERED BY THE TOWER, EQUIPMENT OR DRIVEWAY, SHALL BE GRADED TO A UNIFORM SLOPE, AND STABILIZED TO PREVENT EROSION AS SPECIFIED ON THE CONSTRUCTION DRAWINGS AND/OR PROJECT SPECIFICATIONS.

18. CONTRACTOR SHALL MINIMIZE DISTURBANCE TO EXISTING SITE DURING CONSTRUCTION. EROSION CONTROL MEASURES, IF REQUIRED DURING CONSTRUCTION, SHALL BE IN CONFORMANCE WITH THE LOCAL GUIDELINES FOR EROSION AND SEDIMENT CONTROL.

19. THE CONTRACTOR SHALL PROTECT EXISTING IMPROVEMENTS, PAVEMENTS, CURBS, LANDSCAPING AND STRUCTURES. ANY DAMAGED PART SHALL BE REPAIRED AT CONTRACTOR'S EXPENSE TO THE SATISFACTION OF OWNER.

20. CONTRACTOR SHALL LEGALLY AND PROPERLY DISPOSE OF ALL SCRAP MATERIALS SUCH AS COAXIAL CABLES AND OTHER ITEMS REMOVED FROM THE EXISTING FACILITY. ANTENNAS AND RADIOS REMOVED SHALL BE RETURNED TO THE OWNER'S DESIGNATED LOCATION.

21. CONTRACTOR SHALL LEAVE PREMISES IN CLEAN CONDITION. TRASH AND DEBRIS SHOULD BE REMOVED FROM SITE ON A DAILY BASIS.

22. NO FILL OR EMBANKMENT MATERIAL SHALL BE PLACED ON FROZEN GROUND. FROZEN MATERIALS, SNOW OR ICE SHALL NOT BE PLACED IN ANY FILL OR EMBANKMENT.

GENERAL NOTES:

1.FOR THE PURPOSE OF CONSTRUCTION DRAWING, THE FOLLOWING DEFINITIONS SHALL APPLY:

CONTRACTOR:GENERAL CONTRACTOR RESPONSIBLE FOR CONSTRUCTION

CARRIER:DISH Wireless L.L.C.

TOWER OWNER:TOWER OWNER

2. THESE DRAWINGS HAVE BEEN PREPARED USING STANDARDS OF PROFESSIONAL CARE AND COMPLETENESS NORMALLY EXERCISED UNDER SIMILAR CIRCUMSTANCES BY REPUTABLE ENGINEERS IN THIS OR SIMILAR LOCALITIES. IT IS ASSUMED THAT THE WORK DEPICTED WILL BE PERFORMED BY AN EXPERIENCED CONTRACTOR AND/OR WORKPEOPLE WHO HAVE A WORKING KNOWLEDGE OF THE APPLICABLE CODE STANDARDS AND REQUIREMENTS AND OF INDUSTRY ACCEPTED STANDARD GOOD PRACTICE. AS NOT EVERY CONDITION OR ELEMENT IS (OR CAN BE) EXPLICITLY SHOWN ON THESE DRAWINGS, THE CONTRACTOR SHALL USE INDUSTRY ACCEPTED STANDARD GOOD PRACTICE FOR MISCELLANEOUS WORK NOT EXPLICITLY SHOWN.

3. THESE DRAWINGS REPRESENT THE FINISHED STRUCTURE. THEY DO NOT INDICATE THE MEANS OR METHODS OF CONSTRUCTION. THE CONTRACTOR SHALL BE SOLELY RESPONSIBLE FOR THE CONSTRUCTION MEANS, METHODS, TECHNIQUES, SEQUENCES, AND PROCEDURES. THE CONTRACTOR SHALL PROVIDE ALL MEASURES NECESSARY FOR PROTECTION OF LIFE AND PROPERTY DURING CONSTRUCTION. SUCH MEASURES SHALL INCLUDE, BUT NOT BE LIMITED TO, BRACING, FORMWORK, SHORING, ETC. SITE VISITS BY THE ENGINEER OR HIS REPRESENTATIVE WILL NOT INCLUDE INSPECTION OF THESE ITEMS AND IS FOR STRUCTURAL OBSERVATION OF THE FINISHED STRUCTURE ONLY.

4. NOTES AND DETAILS IN THE CONSTRUCTION DRAWINGS SHALL TAKE PRECEDENCE OVER GENERAL NOTES AND TYPICAL DETAILS. WHERE NO DETAILS ARE SHOWN, CONSTRUCTION SHALL CONFORM TO SIMILAR WORK ON THE PROJECT, AND/OR AS PROVIDED FOR IN THE CONTRACT DOCUMENTS. WHERE DISCREPANCIES OCCUR BETWEEN PLANS, DETAILS, GENERAL NOTES, AND SPECIFICATIONS, THE GREATER, MORE STRICT REQUIREMENTS, SHALL GOVERN. IF FURTHER CLARIFICATION IS REQUIRED CONTACT THE ENGINEER OF RECORD.

5. SUBSTANTIAL EFFORT HAS BEEN MADE TO PROVIDE ACCURATE DIMENSIONS AND MEASUREMENTS ON THE DRAWINGS TO ASSIST IN THE FABRICATION AND/OR PLACEMENT OF CONSTRUCTION ELEMENTS BUT IT IS THE SOLE RESPONSIBILITY OF THE CONTRACTOR TO FIELD VERIFY THE DIMENSIONS, MEASUREMENTS, AND/OR CLEARANCES SHOWN IN THE CONSTRUCTION DRAWINGS PRIOR TO FABRICATION OR CUTTING OF ANY NEW OR EXISTING CONSTRUCTION ELEMENTS. IF IT IS DETERMINED THAT THERE ARE DISCREPANCIES AND/OR CONFLICTS WITH THE CONSTRUCTION DRAWINGS THE ENGINEER OF RECORD IS TO BE NOTIFIED AS SOON AS POSSIBLE.

6. PRIOR TO THE SUBMISSION OF BIDS, THE BIDDING CONTRACTOR SHALL VISIT THE CELL SITE TO FAMILIARIZE WITH THE EXISTING CONDITIONS AND TO CONFIRM THAT THE WORK CAN BE ACCOMPLISHED AS SHOWN ON THE CONSTRUCTION DRAWINGS. ANY DISCREPANCY FOUND SHALL BE BROUGHT TO THE ATTENTION OF CARRIER POC AND TOWER OWNER.

7. ALL MATERIALS FURNISHED AND INSTALLED SHALL BE IN STRICT ACCORDANCE WITH ALL APPLICABLE CODES, REGULATIONS AND ORDINANCES. CONTRACTOR SHALL ISSUE ALL APPROPRIATE NOTICES AND COMPLY WITH ALL LAWS, ORDINANCES, RULES, REGULATIONS AND LAWFUL ORDERS OF ANY PUBLIC AUTHORITY REGARDING THE PERFORMANCE OF THE WORK. ALL WORK CARRIED OUT SHALL COMPLY WITH ALL APPLICABLE MUNICIPAL AND UTILITY COMPANY SPECIFICATIONS AND LOCAL JURISDICTIONAL CODES, ORDINANCES AND APPLICABLE REGULATIONS.

8. UNLESS NOTED OTHERWISE, THE WORK SHALL INCLUDE FURNISHING MATERIALS, EQUIPMENT, APPURTENANCES AND LABOR NECESSARY TO COMPLETE ALL INSTALLATIONS AS INDICATED ON THE DRAWINGS.

9. THE CONTRACTOR SHALL INSTALL ALL EQUIPMENT AND MATERIALS IN ACCORDANCE WITH MANUFACTURER'S RECOMMENDATIONS UNLESS SPECIFICALLY STATED OTHERWISE.

10. IF THE SPECIFIED EQUIPMENT CAN NOT BE INSTALLED AS SHOWN ON THESE DRAWINGS, THE CONTRACTOR SHALL PROPOSE AN ALTERNATIVE INSTALLATION FOR APPROVAL BY THE CARRIER AND TOWER OWNER PRIOR TO PROCEEDING WITH ANY SUCH CHANGE OF INSTALLATION.

11. CONTRACTOR IS TO PERFORM A SITE INVESTIGATION, BEFORE SUBMITTING BIDS, TO DETERMINE THE BEST ROUTING OF ALL CONDUITS FOR POWER, AND TELCO AND FOR GROUNDING CABLES AS SHOWN IN THE POWER, TELCO, AND GROUNDING PLAN DRAWINGS.

12. THE CONTRACTOR SHALL PROTECT EXISTING IMPROVEMENTS, PAVEMENTS, CURBS, LANDSCAPING AND STRUCTURES. ANY DAMAGED PART SHALL BE REPAIRED AT CONTRACTOR'S EXPENSE TO THE SATISFACTION OF DISH Wireless L.L.C. AND TOWER OWNER

13. CONTRACTOR SHALL LEGALLY AND PROPERLY DISPOSE OF ALL SCRAP MATERIALS SUCH AS COAXIAL CABLES AND OTHER ITEMS REMOVED FROM THE EXISTING FACILITY. ANTENNAS REMOVED SHALL BE RETURNED TO THE OWNER'S DESIGNATED LOCATION.

14. CONTRACTOR SHALL LEAVE PREMISES IN CLEAN CONDITION. TRASH AND DEBRIS SHOULD BE REMOVED FROM SITE ON A DAILY BASIS.

RELEASED FOR CONSTRUCTION
As Noted on Plans Review

Development Services Department
Lee's Summit, Missouri

11/08/2021

dish wireless.
5701 SOUTH SANTA FE DRIVE
LITTLETON, CO 80120

AMERICAN TOWER

LAB
49030 Pontiac Trail, Suite 400
Wixom, Michigan 48393
PHONE: (248) 705-9212

STATE OF MISSOURI
PETER P. LICHOMSKI
NUMBER A-2015009119
ARCHITECT

IT IS A VIOLATION OF LAW FOR ANY PERSON, UNLESS THEY ARE ACTING UNDER THE DIRECTION OF A LICENSED PROFESSIONAL ENGINEER, TO ALTER THIS DOCUMENT.

DRAWN BY:	CHECKED BY:	APPROVED BY:
RC	PL	---

RFDS REV #: N/A

CONSTRUCTION DOCUMENTS

SUBMITTALS

REV	DATE	DESCRIPTION
A	07/28/2021	ISSUED FOR REVIEW
0	09/23/2021	ISSUED FOR CONSTRUCTION

A&E PROJECT NUMBER
306042

DISH Wireless L.L.C.
PROJECT INFORMATION
KCMCI00155B
1204 N.E. WOODS CHAPEL ROAD
LEES SUMMIT, MO 64064

SHEET TITLE
GENERAL NOTES

SHEET NUMBER
GN-2

CONCRETE, FOUNDATIONS, AND REINFORCING STEEL:

1. ALL CONCRETE WORK SHALL BE IN ACCORDANCE WITH THE ACI 301, ACI 318, ACI 336, ASTM A184, ASTM A185 AND THE DESIGN AND CONSTRUCTION SPECIFICATION FOR CAST-IN-PLACE CONCRETE.

2. UNLESS NOTED OTHERWISE, SOIL BEARING PRESSURE USED FOR DESIGN OF SLABS AND FOUNDATIONS IS ASSUMED TO BE 1000 psf.

3. ALL CONCRETE SHALL HAVE A MINIMUM COMPRESSIVE STRENGTH (f'c) OF 3000 psi AT 28 DAYS, UNLESS NOTED OTHERWISE. NO MORE THAN 90 MINUTES SHALL ELAPSE FROM BATCH TIME TO TIME OF PLACEMENT UNLESS APPROVED BY THE ENGINEER OF RECORD. TEMPERATURE OF CONCRETE SHALL NOT EXCEED 90°f AT TIME OF PLACEMENT.

4. CONCRETE EXPOSED TO FREEZE-THAW CYCLES SHALL CONTAIN AIR ENTRAINING ADMIXTURES. AMOUNT OF AIR ENTRAINMENT TO BE BASED ON SIZE OF AGGREGATE AND F3 CLASS EXPOSURE (VERY SEVERE). CEMENT USED TO BE TYPE II PORTLAND CEMENT WITH A MAXIMUM WATER-TO-CEMENT RATIO (W/C) OF 0.45.

5. ALL STEEL REINFORCING SHALL CONFORM TO ASTM A615. ALL WELDED WIRE FABRIC (WWF) SHALL CONFORM TO ASTM A185. ALL SPLICES SHALL BE CLASS "B" TENSION SPLICES, UNLESS NOTED OTHERWISE. ALL HOOKS SHALL BE STANDARD 90 DEGREE HOOKS, UNLESS NOTED OTHERWISE. YIELD STRENGTH (Fy) OF STANDARD DEFORMED BARS ARE AS FOLLOWS:

#4 BARS AND SMALLER 40 ksi

#5 BARS AND LARGER 60 ksi

6. THE FOLLOWING MINIMUM CONCRETE COVER SHALL BE PROVIDED FOR REINFORCING STEEL UNLESS SHOWN OTHERWISE ON DRAWINGS:

- CONCRETE CAST AGAINST AND PERMANENTLY EXPOSED TO EARTH 3"
- CONCRETE EXPOSED TO EARTH OR WEATHER:
- #6 BARS AND LARGER 2"
- #5 BARS AND SMALLER 1-1/2"
- CONCRETE NOT EXPOSED TO EARTH OR WEATHER:
- SLAB AND WALLS 3/4"
- BEAMS AND COLUMNS 1-1/2"

7. A TOOLED EDGE OR A 3/4" CHAMFER SHALL BE PROVIDED AT ALL EXPOSED EDGES OF CONCRETE, UNLESS NOTED OTHERWISE, IN ACCORDANCE WITH ACI 301 SECTION 4.2.4.

ELECTRICAL INSTALLATION NOTES:

1. ALL ELECTRICAL WORK SHALL BE PERFORMED IN ACCORDANCE WITH THE PROJECT SPECIFICATIONS, NEC AND ALL APPLICABLE FEDERAL, STATE, AND LOCAL CODES/ORDINANCES.

2. CONDUIT ROUTINGS ARE SCHEMATIC. CONTRACTOR SHALL INSTALL CONDUITS SO THAT ACCESS TO EQUIPMENT IS NOT BLOCKED AND TRIP HAZARDS ARE ELIMINATED.

3. WIRING, RACEWAY AND SUPPORT METHODS AND MATERIALS SHALL COMPLY WITH THE REQUIREMENTS OF THE NEC.

4. ALL CIRCUITS SHALL BE SEGREGATED AND MAINTAIN MINIMUM CABLE SEPARATION AS REQUIRED BY THE NEC.

4.1. ALL EQUIPMENT SHALL BEAR THE UNDERWRITERS LABORATORIES LABEL OF APPROVAL, AND SHALL CONFORM TO REQUIREMENT OF THE NATIONAL ELECTRICAL CODE.

4.2. ALL OVERCURRENT DEVICES SHALL HAVE AN INTERRUPTING CURRENT RATING THAT SHALL BE GREATER THAN THE SHORT CIRCUIT CURRENT TO WHICH THEY ARE SUBJECTED, 22,000 AIC MINIMUM. VERIFY AVAILABLE SHORT CIRCUIT CURRENT DOES NOT EXCEED THE RATING OF ELECTRICAL EQUIPMENT IN ACCORDANCE WITH ARTICLE 110.24 NEC OR THE MOST CURRENT ADOPTED CODE PRE THE GOVERNING JURISDICTION.

5. EACH END OF EVERY POWER PHASE CONDUCTOR, GROUNDING CONDUCTOR, AND TELCO CONDUCTOR OR CABLE SHALL BE LABELED WITH COLOR-CODED INSULATION OR ELECTRICAL TAPE (3M BRAND, 1/2" PLASTIC ELECTRICAL TAPE WITH UV PROTECTION, OR EQUAL). THE IDENTIFICATION METHOD SHALL CONFORM WITH NEC AND OSHA.

6. ALL ELECTRICAL COMPONENTS SHALL BE CLEARLY LABELED WITH LAMICOID TAGS SHOWING THEIR RATED VOLTAGE, PHASE CONFIGURATION, WIRE CONFIGURATION, POWER OR AMPACITY RATING AND BRANCH CIRCUIT ID NUMBERS (i.e. PANEL BOARD AND CIRCUIT ID'S).

7. PANEL BOARDS (ID NUMBERS) SHALL BE CLEARLY LABELED WITH PLASTIC LABELS.

8. TIE WRAPS ARE NOT ALLOWED.

9. ALL POWER AND EQUIPMENT GROUND WIRING IN TUBING OR CONDUIT SHALL BE SINGLE COPPER CONDUCTOR (#14 OR LARGER) WITH TYPE THHW, THWN, THWN-2, XHHW, XHHW-2, THW, THW-2, RHW, OR RHW-2 INSULATION UNLESS OTHERWISE SPECIFIED.

10. SUPPLEMENTAL EQUIPMENT GROUND WIRING LOCATED INDOORS SHALL BE SINGLE COPPER CONDUCTOR (#6 OR LARGER) WITH TYPE THHW, THWN, THWN-2, XHHW, XHHW-2, THW, THW-2, RHW, OR RHW-2 INSULATION UNLESS OTHERWISE SPECIFIED.

11. POWER AND CONTROL WIRING IN FLEXIBLE CORD SHALL BE MULTI-CONDUCTOR, TYPE SOOW CORD (#14 OR LARGER) UNLESS OTHERWISE SPECIFIED.

12. POWER AND CONTROL WIRING FOR USE IN CABLE TRAY SHALL BE MULTI-CONDUCTOR, TYPE TC CABLE (#14 OR LARGER), WITH TYPE THHW, THWN, THWN-2, XHHW, XHHW-2, THW, THW-2, RHW, OR RHW-2 INSULATION UNLESS OTHERWISE SPECIFIED.

13. ALL POWER AND GROUNDING CONNECTIONS SHALL BE CRIMP-STYLE, COMPRESSION WIRE LUGS AND WIRE NUTS BY THOMAS AND BETTS (OR EQUAL). LUGS AND WIRE NUTS SHALL BE RATED FOR OPERATION NOT LESS THAN 75° C (90° C IF AVAILABLE).

14. RACEWAY AND CABLE TRAY SHALL BE LISTED OR LABELED FOR ELECTRICAL USE IN ACCORDANCE WITH NEMA, UL, ANSI/IEEE AND NEC.

15. ELECTRICAL METALLIC TUBING (EMT), INTERMEDIATE METAL CONDUIT (IMC), OR RIGID METAL CONDUIT (RMC) SHALL BE USED FOR EXPOSED INDOOR LOCATIONS.

16. ELECTRICAL METALLIC TUBING (EMT) OR METAL-CLAD CABLE (MC) SHALL BE USED FOR CONCEALED INDOOR LOCATIONS.

17. SCHEDULE 40 PVC UNDERGROUND ON STRAIGHTS AND SCHEDULE 80 PVC FOR ALL ELBOWS/90s AND ALL APPROVED ABOVE GRADE PVC CONDUIT.

18. LIQUID-TIGHT FLEXIBLE METALLIC CONDUIT (LIQUID-TITE FLEX) SHALL BE USED INDOORS AND OUTDOORS, WHERE VIBRATION OCCURS OR FLEXIBILITY IS NEEDED.

19. CONDUIT AND TUBING FITTINGS SHALL BE THREADED OR COMPRESSION-TYPE AND APPROVED FOR THE LOCATION USED. SET SCREW FITTINGS ARE NOT ACCEPTABLE.

20. CABINETS, BOXES AND WIRE WAYS SHALL BE LABELED FOR ELECTRICAL USE IN ACCORDANCE WITH NEMA, UL, ANSI/IEEE AND THE NEC.

21. WIREWAYS SHALL BE METAL WITH AN ENAMEL FINISH AND INCLUDE A HINGED COVER, DESIGNED TO SWING OPEN DOWNWARDS (WIREMOLD SPECMATE WIREWAY).

22. SLOTTED WIRING DUCT SHALL BE PVC AND INCLUDE COVER (PANDUIT TYPE E OR EQUAL).

23. CONDUITS SHALL BE FASTENED SECURELY IN PLACE WITH APPROVED NON-PERFORATED STRAPS AND HANGERS. EXPLOSIVE DEVICES (i.e. POWDER-ACTUATED) FOR ATTACHING HANGERS TO STRUCTURE WILL NOT BE PERMITTED. CLOSELY FOLLOW THE LINES OF THE STRUCTURE, MAINTAIN CLOSE PROXIMITY TO THE STRUCTURE AND KEEP CONDUITS IN TIGHT ENVELOPES. CHANGES IN DIRECTION TO ROUTE AROUND OBSTACLES SHALL BE MADE WITH CONDUIT OUTLET BODIES. CONDUIT SHALL BE INSTALLED IN A NEAT AND WORKMANLIKE MANNER. PARALLEL AND PERPENDICULAR TO STRUCTURE WALL AND CEILING LINES. ALL CONDUIT SHALL BE FISHED TO CLEAR OBSTRUCTIONS. ENDS OF CONDUITS SHALL BE TEMPORARILY CAPPED FLUSH TO FINISH GRADE TO PREVENT CONCRETE, PLASTER OR DIRT FROM ENTERING. CONDUITS SHALL BE RIGIDLY CLAMPED TO BOXES BY GALVANIZED MALLEABLE IRON BUSHING ON INSIDE AND GALVANIZED MALLEABLE IRON LOCKNUT ON OUTSIDE AND INSIDE.

24. EQUIPMENT CABINETS, TERMINAL BOXES, JUNCTION BOXES AND PULL BOXES SHALL BE GALVANIZED OR EPOXY-COATED SHEET STEEL. SHALL MEET OR EXCEED UL 50 AND BE RATED NEMA 1 (OR BETTER) FOR INTERIOR LOCATIONS AND NEMA 3 (OR BETTER) FOR EXTERIOR LOCATIONS.

25. METAL RECEPTACLE, SWITCH AND DEVICE BOXES SHALL BE GALVANIZED, EPOXY-COATED OR NON-CORRODING; SHALL MEET OR EXCEED UL 514A AND NEMA OS 1 AND BE RATED NEMA 1 (OR BETTER) FOR INTERIOR LOCATIONS AND WEATHER PROTECTED (WP OR BETTER) FOR EXTERIOR LOCATIONS.

26. NONMETALLIC RECEPTACLE, SWITCH AND DEVICE BOXES SHALL MEET OR EXCEED NEMA OS 2 (NEWEST REVISION) AND BE RATED NEMA 1 (OR BETTER) FOR INTERIOR LOCATIONS AND WEATHER PROTECTED (WP OR BETTER) FOR EXTERIOR LOCATIONS.

27. THE CONTRACTOR SHALL NOTIFY AND OBTAIN NECESSARY AUTHORIZATION FROM THE CARRIER AND/OR DISH Wireless L.L.C. AND TOWER OWNER BEFORE COMMENCING WORK ON THE AC POWER DISTRIBUTION PANELS.

28. THE CONTRACTOR SHALL PROVIDE NECESSARY TAGGING ON THE BREAKERS, CABLES AND DISTRIBUTION PANELS IN ACCORDANCE WITH THE APPLICABLE CODES AND STANDARDS TO SAFEGUARD LIFE AND PROPERTY.

29. INSTALL LAMICOID LABEL ON THE METER CENTER TO SHOW "DISH Wireless L.L.C.".

30. ALL EMPTY/SPARE CONDUITS THAT ARE INSTALLED ARE TO HAVE A METERED MULE TAPE PULL CORD INSTALLED.

RELEASED FOR CONSTRUCTION
As Noted on Plans Review

Development Services Department
Lee's Summit, Missouri

11/08/2021

dish wireless.
5701 SOUTH SANTA FE DRIVE
LITTLETON, CO 80120

AMERICAN TOWER®

LAB
49030 Pontiac Trail, Suite 400
Wixom, Michigan 48393
PHONE: (248) 705-9212

STATE OF MISSOURI
PETER P. LICHOMSKI
NUMBER A-2015009119
ARCHITECT

IT IS A VIOLATION OF LAW FOR ANY PERSON, UNLESS THEY ARE ACTING UNDER THE DIRECTION OF A LICENSED PROFESSIONAL ENGINEER, TO ALTER THIS DOCUMENT.

DRAWN BY:	CHECKED BY:	APPROVED BY:
RC	PL	---

RFDS REV #: N/A

CONSTRUCTION DOCUMENTS

SUBMITTALS

REV	DATE	DESCRIPTION
A	07/28/2021	ISSUED FOR REVIEW
0	09/23/2021	ISSUED FOR CONSTRUCTION

A&E PROJECT NUMBER
306042

DISH Wireless L.L.C.
PROJECT INFORMATION
KCMCI00155B
1204 N.E. WOODS CHAPEL ROAD
LEES SUMMIT, MO 64064

SHEET TITLE
GENERAL NOTES

SHEET NUMBER
GN-3

GROUNDING NOTES:

1. ALL GROUND ELECTRODE SYSTEMS (INCLUDING TELECOMMUNICATION, RADIO, LIGHTNING PROTECTION AND AC POWER GES'S) SHALL BE BONDED TOGETHER AT OR BELOW GRADE, BY TWO OR MORE COPPER BONDING CONDUCTORS IN ACCORDANCE WITH THE NEC.

2. THE CONTRACTOR SHALL PERFORM IEEE FALL-OF-POTENTIAL RESISTANCE TO EARTH TESTING (PER IEEE 1100 AND 81) FOR GROUND ELECTRODE SYSTEMS, THE CONTRACTOR SHALL FURNISH AND INSTALL SUPPLEMENTAL GROUND ELECTRODES AS NEEDED TO ACHIEVE A TEST RESULT OF 5 OHMS OR LESS.

3. THE CONTRACTOR IS RESPONSIBLE FOR PROPERLY SEQUENCING GROUNDING AND UNDERGROUND CONDUIT INSTALLATION AS TO PREVENT ANY LOSS OF CONTINUITY IN THE GROUNDING SYSTEM OR DAMAGE TO THE CONDUIT AND PROVIDE TESTING RESULTS.

4. METAL CONDUIT AND TRAY SHALL BE GROUNDED AND MADE ELECTRICALLY CONTINUOUS WITH LISTED BONDING FITTINGS OR BY BONDING ACROSS THE DISCONTINUITY WITH #6 COPPER WIRE UL APPROVED GROUNDING TYPE CONDUIT CLAMPS.

5. METAL RACEWAY SHALL NOT BE USED AS THE NEC REQUIRED EQUIPMENT GROUND CONDUCTOR. STRANDED COPPER CONDUCTORS WITH GREEN INSULATION, SIZED IN ACCORDANCE WITH THE NEC, SHALL BE FURNISHED AND INSTALLED WITH THE POWER CIRCUITS TO BTS EQUIPMENT.

6. EACH CABINET FRAME SHALL BE DIRECTLY CONNECTED TO THE MASTER GROUND BAR WITH GREEN INSULATED SUPPLEMENTAL EQUIPMENT GROUND WIRES, #6 STRANDED COPPER OR LARGER FOR INDOOR BTS; #2 BARE SOLID TINNED COPPER FOR OUTDOOR BTS.

7. CONNECTIONS TO THE GROUND BUS SHALL NOT BE DOUBLED UP OR STACKED BACK TO BACK CONNECTIONS ON OPPOSITE SIDE OF THE GROUND BUS ARE PERMITTED.

8. ALL EXTERIOR GROUND CONDUCTORS BETWEEN EQUIPMENT/GROUND BARS AND THE GROUND RING SHALL BE #2 SOLID TINNED COPPER UNLESS OTHERWISE INDICATED.

9. ALUMINUM CONDUCTOR OR COPPER CLAD STEEL CONDUCTOR SHALL NOT BE USED FOR GROUNDING CONNECTIONS.

10. USE OF 90° BENDS IN THE PROTECTION GROUNDING CONDUCTORS SHALL BE AVOIDED WHEN 45° BENDS CAN BE ADEQUATELY SUPPORTED.

11. EXOTHERMIC WELDS SHALL BE USED FOR ALL GROUNDING CONNECTIONS BELOW GRADE.

12. ALL GROUND CONNECTIONS ABOVE GRADE (INTERIOR AND EXTERIOR) SHALL BE FORMED USING HIGH PRESS CRIMPS.

13. COMPRESSION GROUND CONNECTIONS MAY BE REPLACED BY EXOTHERMIC WELD CONNECTIONS.

14. ICE BRIDGE BONDING CONDUCTORS SHALL BE EXOTHERMICALLY BONDED OR BOLTED TO THE BRIDGE AND THE TOWER GROUND BAR.

15. APPROVED ANTIOXIDANT COATINGS (i.e. CONDUCTIVE GEL OR PASTE) SHALL BE USED ON ALL COMPRESSION AND BOLTED GROUND CONNECTIONS.

16. ALL EXTERIOR GROUND CONNECTIONS SHALL BE COATED WITH A CORROSION RESISTANT MATERIAL.

17. MISCELLANEOUS ELECTRICAL AND NON-ELECTRICAL METAL BOXES, FRAMES AND SUPPORTS SHALL BE BONDED TO THE GROUND RING, IN ACCORDANCE WITH THE NEC.

18. BOND ALL METALLIC OBJECTS WITHIN 6 ft OF MAIN GROUND RING WITH (1) #2 BARE SOLID TINNED COPPER GROUND CONDUCTOR.

19. GROUND CONDUCTORS USED FOR THE FACILITY GROUNDING AND LIGHTNING PROTECTION SYSTEMS SHALL NOT BE ROUTED THROUGH METALLIC OBJECTS THAT FORM A RING AROUND THE CONDUCTOR, SUCH AS METALLIC CONDUITS, METAL SUPPORT CLIPS OR SLEEVES THROUGH WALLS OR FLOORS. WHEN IT IS REQUIRED TO BE HOUSED IN CONDUIT TO MEET CODE REQUIREMENTS OR LOCAL CONDITIONS, NON-METALLIC MATERIAL SUCH AS PVC CONDUIT SHALL BE USED. WHERE USE OF METAL CONDUIT IS UNAVOIDABLE (i.e., NONMETALLIC CONDUIT PROHIBITED BY LOCAL CODE) THE GROUND CONDUCTOR SHALL BE BONDED TO EACH END OF THE METAL CONDUIT.

20. ALL GROUNDS THAT TRANSITION FROM BELOW GRADE TO ABOVE GRADE MUST BE #2 BARE SOLID TINNED COPPER IN 3/4" NON-METALLIC, FLEXIBLE CONDUIT FROM 24" BELOW GRADE TO WITHIN 3" TO 6" OF CAD-WELD TERMINATION POINT. THE EXPOSED END OF THE CONDUIT MUST BE SEALED WITH SILICONE CAULK. (ADD TRANSITIONING GROUND STANDARD DETAIL AS WELL).

21. BUILDINGS WHERE THE MAIN GROUNDING CONDUCTORS ARE REQUIRED TO BE ROUTED TO GRADE, THE CONTRACTOR SHALL ROUTE TWO GROUNDING CONDUCTORS FROM THE ROOFTOP, TOWERS, AND WATER TOWERS GROUNDING RING, TO THE EXISTING GROUNDING SYSTEM, THE GROUNDING CONDUCTORS SHALL NOT BE SMALLER THAN 2/0 COPPER. ROOFTOP GROUNDING RING SHALL BE BONDED TO THE EXISTING GROUNDING SYSTEM, THE BUILDING STEEL COLUMNS, LIGHTNING PROTECTION SYSTEM, AND BUILDING MAIN WATER LINE (FERROUS OR NONFERROUS METAL PIPING ONLY). DO NOT ATTACH GROUNDING TO FIRE SPRINKLER SYSTEM PIPES.

RELEASED FOR CONSTRUCTION
As Noted on Plans Review

Development Services Department
Lee's Summit, Missouri

11/08/2021

dish wireless.

5701 SOUTH SANTA FE DRIVE
LITTLETON, CO 80120

AMERICAN TOWER®

LAB
49030 Pontiac Trail, Suite 400
Wixom, Michigan 48393
PHONE: (248) 705-9212

STATE OF MISSOURI
PETER P. LICHOMSKI
NUMBER A-2015009113
ARCHITECT

IT IS A VIOLATION OF LAW FOR ANY PERSON, UNLESS THEY ARE ACTING UNDER THE DIRECTION OF A LICENSED PROFESSIONAL ENGINEER, TO ALTER THIS DOCUMENT.

DRAWN BY:	CHECKED BY:	APPROVED BY:
RC	PL	---

RFDS REV #: N/A

CONSTRUCTION DOCUMENTS

SUBMITTALS

REV	DATE	DESCRIPTION
A	07/28/2021	ISSUED FOR REVIEW
0	09/23/2021	ISSUED FOR CONSTRUCTION

A&E PROJECT NUMBER
306042

DISH Wireless L.L.C.
PROJECT INFORMATION
KCMCI00155B
1204 N.E. WOODS CHAPEL ROAD
LEES SUMMIT, MO 64064

SHEET TITLE
GENERAL NOTES

SHEET NUMBER
GN-4