RELEASE FOR CONSTRUCTION
AS NOTED FOR PLAN REVIEW
DEVELOPMENT SERVICES
LEE'S SUMMIT, MISSOURI
10/22/2021

RE: 2935533
Summit/59 Woodside

MiTek USA, Inc.
16023 Swingley Ridge Rd
Chesterfield, MO 63017
314-434-1200

Site Information:

Customer: Project Name: 2935533
Lot/Block: Model:
Address: Subdivision:
City: State:

General Truss Engineering Criteria & Design Loads (Individual Truss Design Drawings Show Special Loading Conditions):

Design Code: IRC2018/TPI2014 Design Program: MiTek 20/20 8.4
Wind Code: ASCE 7-16 Wind Speed: 115 mph
Roof Load: 45.0 psf Floor Load: N/A psf

This package includes 38 individual, dated Truss Design Drawings and 0 Additional Drawings.

No.	Seal#	Truss Name	Date	No.	Seal#	Truss Name	Date
1	I47079224	A1	7/20/2021	21	I47079244	LG1	7/20/2021
2	I47079225	A2	7/20/2021	22	I47079245	M1	7/20/2021
3	I47079226	B1	7/20/2021	23	I47079246	M2	7/20/2021
4	I47079227	B1A	7/20/2021	24	I47079247	M4	7/20/2021
5	I47079228	C1	7/20/2021	25	I47079248	M5	7/20/2021
6	I47079229	C1A	7/20/2021	26	I47079249	M6	7/20/2021
7	I47079230	C2	7/20/2021	27	I47079250	P1	7/20/2021
8	I47079231	C3	7/20/2021	28	I47079251	V1	7/20/2021
9	I47079232	C4	7/20/2021	29	I47079252	V2	7/20/2021
10	I47079233	C5	7/20/2021	30	I47079253	V4	7/20/2021
11	I47079234	CJ1	7/20/2021	31	I47079254	V5	7/20/2021
12	I47079235	D1	7/20/2021	32	I47079255	V6	7/20/2021
13	I47079236	D2	7/20/2021	33	I47079256	V7	7/20/2021
14	I47079237	D3	7/20/2021	34	I47079257	V8	7/20/2021
15	I47079238	E3	7/20/2021	35	I47079258	V9	7/20/2021
16	I47079239	F1	7/20/2021	36	I47079259	V10	7/20/2021
17	I47079240	F2	7/20/2021	37	I47079260	V11	7/20/2021
18	I47079241	F3	7/20/2021	38	I47079261	V12	7/20/2021
19	I47079242	GR1	7/20/2021				
20	I47079243	J1	7/20/2021				

The truss drawing(s) referenced above have been prepared by
MiTek USA, Inc under my direct supervision
based on the parameters provided by Builders FirstSource (Valley Center).

Truss Design Engineer's Name: Liu, Xuegang
My license renewal date for the state of Missouri is December 31, 2022.
Missouri COA: 001193

IMPORTANT NOTE: The seal on these truss component designs is a certification that the engineer named is licensed in the jurisdiction(s) identified and that the designs comply with ANSI/TPI 1. These designs are based upon parameters shown (e.g., loads, supports, dimensions, shapes and design codes), which were given to MiTek. Any project specific information included is for MiTek customers file reference purpose only, and was not taken into account in the preparation of these designs. MiTek has not independently verified the applicability of the design parameters or the designs for any particular building. Before use, the building designer should verify applicability of design parameters and properly incorporate these designs into the overall building design per ANSI/TPI 1, Chapter 2.

STATE OF MISSOURI
XUEGANG LIU
NUMBER E-29716
PROFESSIONAL ENGINEER

July 20, 2021
Liu, Xuegang

Job	Truss	Truss Type	Qty	Ply	Summit/59 Woodside
2935533	A1	Common Supported Gable	1	1	Job Reference (optional)

RELEASE FOR CONSTRUCTION
AS NOTED FOR PLAN REVIEW
DEVELOPMENT SERVICES
LEE'S SUMMIT, MISSOURI
10/22/2021

Builders FirstSource (Valley Center), Valley Center, KS - 67147, 8.430 s Jun 2 2021 MiTek Industries, Inc. Tue Jul 20 09:05:40 2021 Page 1
ID:VPVqvFnP0P0b1j2tZrlOqezdKbx-9k8pCrNbKEUeQrXDUJB2luEC6fnoHWb_hkjywDN9

Scale = 1:69.6

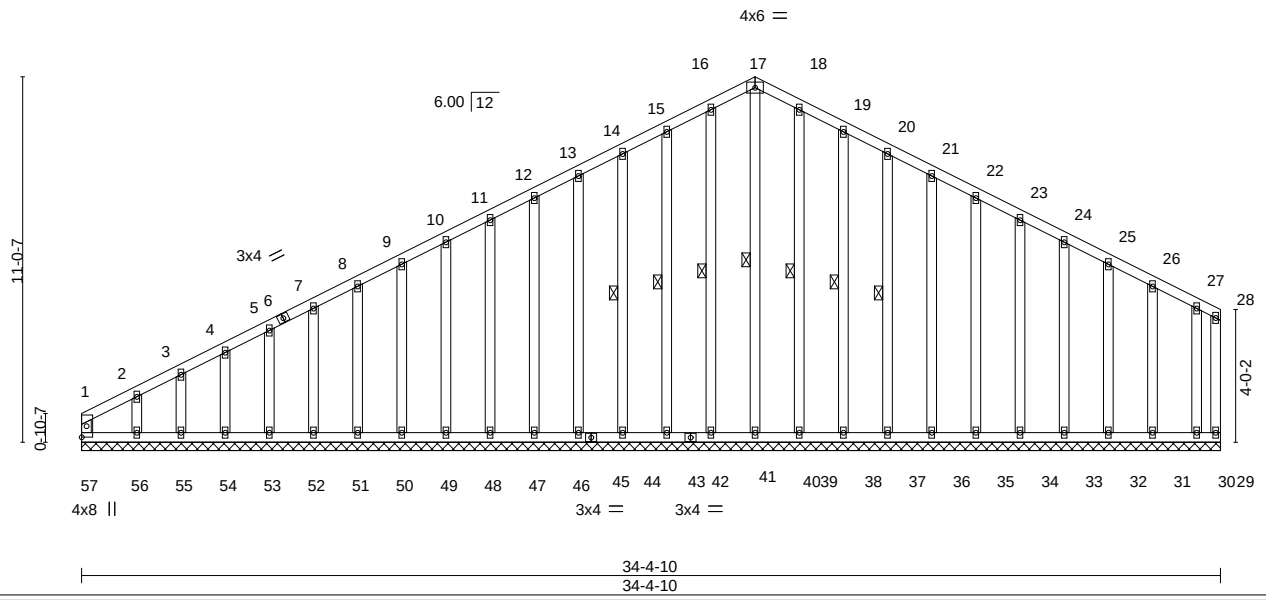

LOADING (psf)		SPACING-	2-0-0	CSI.		DEFL.	in	(loc)	l/defl	L/d	PLATES	GRIP
TCLL	25.0	Plate Grip DOL	1.15	TC	0.10	Vert(LL)	n/a	-	n/a	999	MT20	197/144
TCDL	10.0	Lumber DOL	1.15	BC	0.10	Vert(CT)	n/a	-	n/a	999		
BCLL	0.0	Rep Stress Incr	YES	WB	0.13	Horz(CT)	-0.00	29	n/a	n/a		
BCDL	10.0	Code IRC2018/TPI2014		Matrix-R							Weight: 265 lb	FT = 20%

LUMBER-

TOP CHORD	2x4 SPF No.2
BOT CHORD	2x4 SPF No.2
WEBS	2x4 SPF No.2
OTHERS	2x4 SPF No.2

BRACING-

TOP CHORD	Structural wood sheathing directly applied or 6-0-0 oc purlins, except end verticals.
BOT CHORD	Rigid ceiling directly applied or 10-0-0 oc bracing.
WEBS	1 Row at midpt 17-40, 16-41, 15-43, 14-44, 18-39, 19-38, 20-37

REACTIONS. All bearings 34-4-10.
(lb) - Max Horz 57=244(LC 9)
Max Uplift All uplift 100 lb or less at joint(s) 57, 29, 41, 43, 44, 46, 47, 48, 49, 50, 51, 52, 53, 54, 55, 39, 38, 37, 36, 35, 34, 33, 32, 31, 30 except 56=-192(LC 12)
Max Grav All reactions 250 lb or less at joint(s) 57, 29, 40, 41, 43, 44, 46, 47, 48, 49, 50, 51, 52, 53, 54, 55, 56, 39, 38, 37, 36, 35, 34, 33, 32, 31, 30

FORCES. (lb) - Max. Comp./Max. Ten. - All forces 250 (lb) or less except when shown.
TOP CHORD 12-13=-134/269, 13-14=-146/303, 14-15=-158/336, 15-16=-172/375, 16-17=-175/390, 17-18=-175/390, 18-19=-172/375, 19-20=-158/336, 20-21=-146/303, 21-22=-134/269
WEBS 17-40=-254/85

NOTES-
1) Unbalanced roof live loads have been considered for this design.
2) Wind: ASCE 7-16; Vult=115mph (3-second gust) Vasd=91mph; TCDL=6.0psf; BCDL=4.2psf; h=25ft; Cat. II; Exp C; Enclosed; MWFRS (envelope) gable end zone and C-C Corner(3E) 0-1-12 to 3-0-0, Exterior(2N) 3-0-0 to 20-4-0, Corner(3R) 20-4-0 to 23-4-0, Exterior(2N) 23-4-0 to 34-2-14 zone; cantilever left and right exposed ; end vertical left and right exposed;C-C for members and forces & MWFRS for reactions shown; Lumber DOL=1.60 plate grip DOL=1.60
3) Truss designed for wind loads in the plane of the truss only. For studs exposed to wind (normal to the face), see Standard Industry Gable End Details as applicable, or consult qualified building designer as per ANSI/TPI 1.
4) All plates are 2x4 MT20 unless otherwise indicated.
5) Gable requires continuous bottom chord bearing.
6) Truss to be fully sheathed from one face or securely braced against lateral movement (i.e. diagonal web).
7) Gable studs spaced at 1-4-0 oc.
8) This truss has been designed for a 10.0 psf bottom chord live load nonconcurrent with any other live loads.
9) Provide mechanical connection (by others) of truss to bearing plate capable of withstanding 100 lb uplift at joint(s) 57, 29, 41, 43, 44, 46, 47, 48, 49, 50, 51, 52, 53, 54, 55, 39, 38, 37, 36, 35, 34, 33, 32, 31, 30 except (jt=lb) 56=192.
10) This truss is designed in accordance with the 2018 International Residential Code sections R502.11.1 and R802.10.2 and referenced standard ANSI/TPI 1.

STATE OF MISSOURI
XUEGANG LIU
NUMBER E-29713
PROFESSIONAL ENGINEER

July 20,2021

MiTek
16023 Swingley Ridge Rd
Chesterfield, MO 63017

Job	Truss	Truss Type	Qty	Ply	Summit/59 Woodside
2935533	A2	Roof Special	5	1	Job Reference (optional)

RELEASE FOR CONSTRUCTION
AS NOTED FOR PLAN REVIEW
DEVELOPMENT SERVICES
LEE'S SUMMIT, MISSOURI
10/22/2021

Builders FirstSource (Valley Center), Valley Center, KS - 67147, 8.430 s Jun 2 2021 MiTek Industries, Inc. Tue Jul 20 09:05:42 2021 Page 1
ID:VPVqvFnP0P0b1j2tZrlOqezdKbx-67GadXOrsrlMg9HcckEWqJKNVryPG?fpylAmzywDN7

Scale = 1:71.8

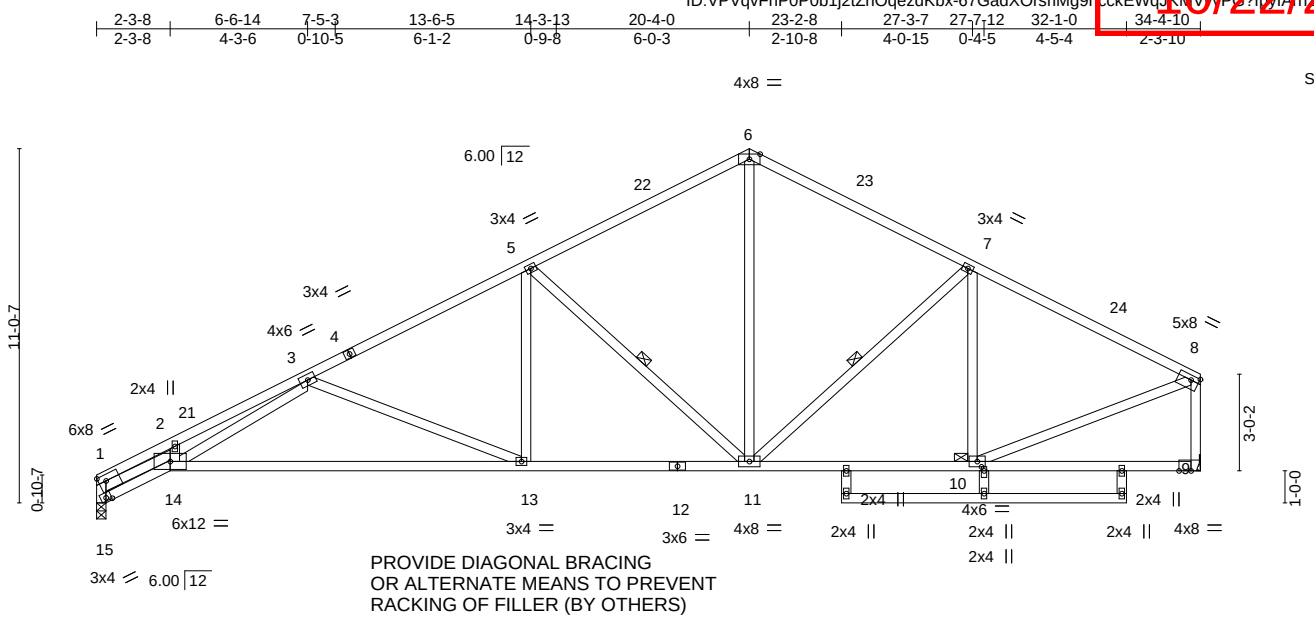

2-3-8	9-3-3	13-6-5	16-2-13	20-4-0	23-2-8	27-3-7	27-7-12	32-1-0	34-4-10
2-3-8	6-11-11	4-3-2	2-8-8	4-1-3	2-10-8	4-0-15	0-4-5	4-5-4	2-3-10

Plate Offsets (X,Y)-- [1:Edge,0-2-4], [8:Edge,0-1-12], [9:0-4-8,0-0-0], [10:0-1-8,0-1-0], [15:0-2-0,0-1-3]

LOADING (psf)		SPACING-	2-0-0	CSI.		DEFL.	in	(loc)	l/defl	L/d	PLATES	GRIP
TCLL	25.0	Plate Grip DOL	1.15	TC	0.84	Vert(LL)	-0.44	13-14	>930	240	MT20	197/144
TCDL	10.0	Lumber DOL	1.15	BC	0.86	Vert(CT)	-0.98	13-14	>415	180		
BCLL	0.0	Rep Stress Incr	YES	WB	0.94	Horz(CT)	0.24	9	n/a	n/a		
BCDL	10.0	Code IRC2018/TPI2014		Matrix-AS							Weight: 170 lb	FT = 20%

LUMBER-

TOP CHORD	2x4 SPF No.2
BOT CHORD	2x4 SPF No.2 *Except*
	12-14: 2x4 SPF 1650F 1.5E
WEBS	2x4 SPF No.2

BRACING-

TOP CHORD	Structural wood sheathing directly applied, except end verticals.
BOT CHORD	Rigid ceiling directly applied.
WEBS	1 Row at midpt 7-11, 5-11
JOINTS	1 Brace at Jt(s): 10

REACTIONS. (size) 15=0-3-8, 9=Mechanical
Max Horz 15=229(LC 9)
Max Uplift 15=-267(LC 12), 9=-224(LC 13)
Max Grav 15=1534(LC 1), 9=1534(LC 1)

FORCES. (lb) - Max. Comp./Max. Ten. - All forces 250 (lb) or less except when shown.
TOP CHORD 1-15=-1634/360, 1-2=-4664/967, 2-3=-4539/1028, 3-5=-2417/447, 5-6=-1595/374, 6-7=-1597/370, 7-8=-1690/303, 8-9=-1467/276
BOT CHORD 14-15=-293/383, 13-14=-707/2836, 11-13=-382/2068, 10-11=-237/1425
WEBS 1-14=-751/3831, 6-11=-172/871, 7-11=-278/176, 7-10=-391/145, 8-10=-208/1453, 5-13=-52/587, 5-11=-1007/333, 3-13=-831/352, 3-14=-390/1471

NOTES-
1) Unbalanced roof live loads have been considered for this design.
2) Wind: ASCE 7-16; Vult=115mph (3-second gust) Vasd=91mph; TCDL=6.0psf; BCDL=4.2psf; h=25ft; Cat. II; Exp C; Enclosed; MWFRS (envelope) gable end zone and C-C Exterior(2E) 0-1-12 to 3-1-12, Interior(1) 3-1-12 to 20-4-0, Exterior(2R) 20-4-0 to 23-4-0 , Interior(1) 23-4-0 to 34-2-14 zone; cantilever left and right exposed ; end vertical left and right exposed;C-C for members and forces & MWFRS for reactions shown; Lumber DOL=1.60 plate grip DOL=1.60
3) This truss has been designed for a 10.0 psf bottom chord live load nonconcurrent with any other live loads.
4) Refer to girder(s) for truss to truss connections.
5) Bearing at joint(s) 15 considers parallel to grain value using ANSI/TPI 1 angle to grain formula. Building designer should verify capacity of bearing surface.
6) Provide mechanical connection (by others) of truss to bearing plate capable of withstanding 100 lb uplift at joint(s) except (jt=lb) 15=267, 9=224.
7) This truss is designed in accordance with the 2018 International Residential Code sections R502.11.1 and R802.10.2 and referenced standard ANSI/TPI 1.
8) This truss design requires that a minimum of 7/16" structural wood sheathing be applied directly to the top chord and 1/2" gypsum sheetrock be applied directly to the bottom chord.

STATE OF MISSOURI
XUEGANG LIU
NUMBER E-29713
PROFESSIONAL ENGINEER

July 20,2021

MiTek
16023 Swingley Ridge Rd
Chesterfield, MO 63017

Job	Truss	Truss Type	Qty	Ply	Summit/59 Woodside
2935533	B1	ROOF SPECIAL	3	1	I47079226 Job Reference (optional)

Builders FirstSource (Valley Center), Valley Center, KS - 67147, 8.430 s Jun 2 2021 MiTek Industries, Inc. Tue Jul 20 09:05:43 2021 Page 1
ID:VPVqvFnP0P0b1j2tZrlOqezdKbx-aJpyqtPUc9tDHIFoASlIMWsV4JEn7RhAywCKPywDN6

-0-11-0	2-3-8	7-2-14	8-3-11	13-5-8	14-3-13	20-4-0	27-4-4	34-8-0
0-11-0	2-3-8	4-11-6	1-0-13	5-1-13	0-10-5	6-0-3	7-0-4	7-3-12

Scale = 1:71.6

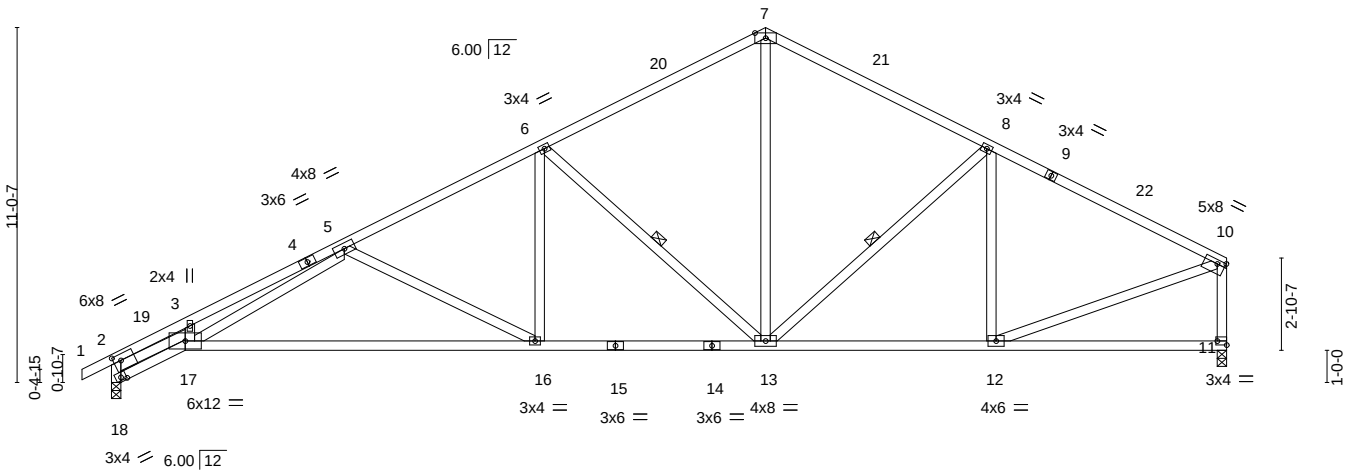

2-3-8	10-3-12	13-5-8	20-4-0	27-4-4	34-8-0
2-3-8	8-0-4	3-1-12	6-10-8	7-0-4	7-3-12

Plate Offsets (X,Y)-- [2:0-2-12,0-2-4], [10:0-3-0,0-1-8], [11:Edge,0-1-8], [18:0-2-0,0-1-3]

LOADING (psf)		SPACING-	2-0-0	CSI.		DEFL.	in	(loc)	l/defl	L/d	PLATES	GRIP
TCLL	25.0	Plate Grip DOL	1.15	TC	0.92	Vert(LL)	-0.44	16-17	>941	240	MT20	197/144
TCDL	10.0	Lumber DOL	1.15	BC	0.85	Vert(CT)	-0.99	16-17	>418	180		
BCLL	0.0	Rep Stress Incr	YES	WB	0.94	Horz(CT)	0.25	11	n/a	n/a		
BCDL	10.0	Code IRC2018/TPI2014		Matrix-AS							Weight: 159 lb	FT = 20%

LUMBER-
TOP CHORD 2x4 SPF No.2
BOT CHORD 2x4 SPF No.2 *Except*
15-17: 2x4 SPF 1650F 1.5E
WEBS 2x4 SPF No.2

BRACING-
TOP CHORD Structural wood sheathing directly applied, except end verticals.
BOT CHORD Rigid ceiling directly applied.
WEBS 1 Row at midpt 8-13, 6-13

REACTIONS. (size) 11=0-3-8, 18=0-3-8
Max Horz 18=235(LC 9)
Max Uplift 11=-227(LC 13), 18=-293(LC 12)
Max Grav 11=1546(LC 1), 18=1622(LC 1)

FORCES. (lb) - Max. Comp./Max. Ten. - All forces 250 (lb) or less except when shown.
TOP CHORD 2-18=-1715/386, 2-3=-4671/983, 3-5=-4571/1067, 5-6=-2435/455, 6-7=-1622/375, 7-8=-1627/375, 8-10=-1754/308, 10-11=-1476/278
BOT CHORD 17-18=-294/382, 16-17=-666/2748, 13-16=-385/2093, 12-13=-241/1479
WEBS 2-17=-765/3837, 7-13=-169/885, 8-13=-309/184, 8-12=-362/141, 10-12=-209/1484, 6-16=-64/594, 6-13=-999/329, 5-16=-736/317, 5-17=-461/1577

NOTES-
1) Unbalanced roof live loads have been considered for this design.
2) Wind: ASCE 7-16; Vult=115mph (3-second gust) Vasd=91mph; TCDL=6.0psf; BCDL=4.2psf; h=25ft; Cat. II; Exp C; Enclosed; MWFRS (envelope) gable end zone and C-C Exterior(2E) -0-11-0 to 2-1-0, Interior(1) 2-1-0 to 20-4-0, Exterior(2R) 20-4-0 to 23-4-0, Interior(1) 23-4-0 to 34-6-4 zone; cantilever left and right exposed ; end vertical left and right exposed;C-C for members and forces & MWFRS for reactions shown; Lumber DOL=1.60 plate grip DOL=1.60
3) This truss has been designed for a 10.0 psf bottom chord live load nonconcurrent with any other live loads.
4) Bearing at joint(s) 18 considers parallel to grain value using ANSI/TPI 1 angle to grain formula. Building designer should verify capacity of bearing surface.
5) Provide mechanical connection (by others) of truss to bearing plate capable of withstanding 100 lb uplift at joint(s) except (jt=lb) 11=227, 18=293.
6) This truss is designed in accordance with the 2018 International Residential Code sections R502.11.1 and R802.10.2 and referenced standard ANSI/TPI 1.
7) This truss design requires that a minimum of 7/16" structural wood sheathing be applied directly to the top chord and 1/2" gypsum sheetrock be applied directly to the bottom chord.

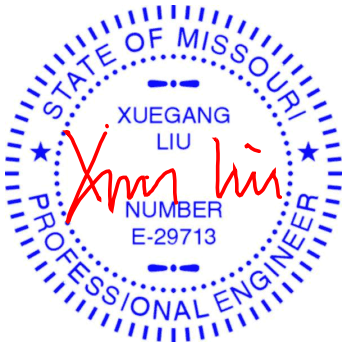

July 20,2021

MiTek
16023 Swingley Ridge Rd
Chesterfield, MO 63017

Job	Truss	Truss Type	Qty	Ply	Summit/59 Woodside
2935533	B1A	Roof Special	1	1	Job Reference (optional) I47079227

Builders FirstSource (Valley Center), Valley Center, KS - 67147, 8.430 s Jun 2 2021 MiTek Industries, Inc. Tue Jul 20 09:05:45 2021 Page 1
ID:VPVqvFnP0P0b1j2tZrlOqezdKbx-WixiFZRk8m7xXcPBHtnDSxys57vGTLCFeDPYOywDN4

-1-11-0	2-3-8	7-2-14	8-3-11	13-5-8	14-3-13	20-4-0	27-4-4	34-8-0
1-11-0	2-3-8	4-11-6	1-0-13	5-1-13	0-10-5	6-0-3	7-0-4	7-3-12

Scale = 1:72.3

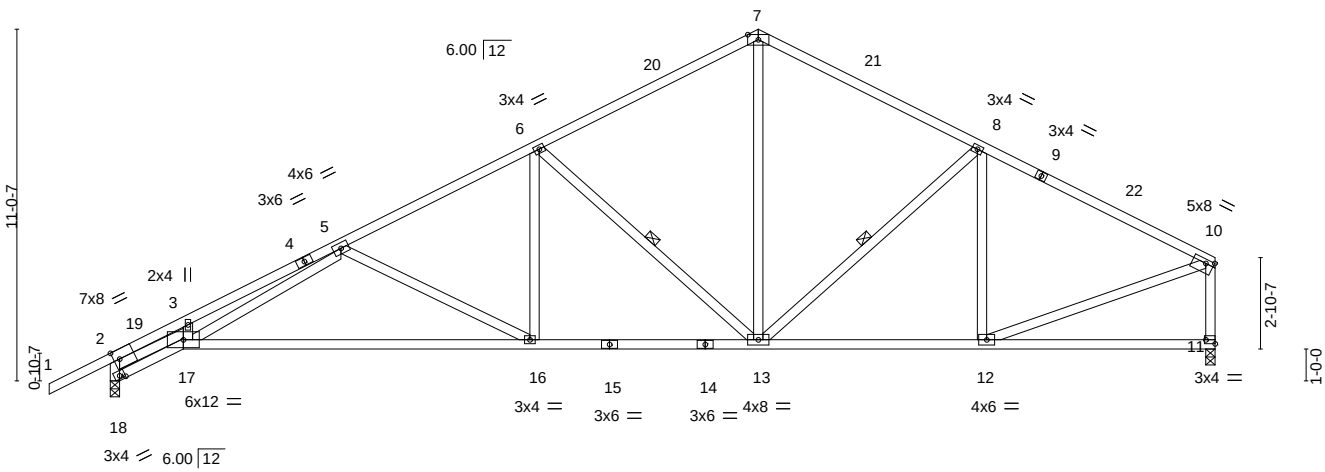

2-3-8	10-3-12	13-5-8	20-4-0	27-4-4	34-8-0
2-3-8	8-0-4	3-1-12	6-10-8	7-0-4	7-3-12

Plate Offsets (X,Y)-- [2:0-2-3,Edge], [10:0-3-0,0-1-8], [11:Edge,0-1-8], [18:0-2-0,0-1-3]

LOADING (psf)		SPACING-	2-0-0	CSI.		DEFL.	in	(loc)	l/defl	L/d	PLATES	GRIP
TCLL	25.0	Plate Grip DOL	1.15	TC	0.88	Vert(LL)	-0.44	16-17	>941	240	MT20	197/144
TCDL	10.0	Lumber DOL	1.15	BC	0.85	Vert(CT)	-0.98	16-17	>419	180		
BCLL	0.0	Rep Stress Incr	YES	WB	0.94	Horz(CT)	0.24	11	n/a	n/a		
BCDL	10.0	Code IRC2018/TPI2014		Matrix-AS							Weight: 160 lb	FT = 20%

LUMBER-
TOP CHORD 2x4 SPF No.2
BOT CHORD 2x4 SPF No.2 *Except*
15-17: 2x4 SPF 1650F 1.5E
WEBS 2x4 SPF No.2

BRACING-
TOP CHORD Structural wood sheathing directly applied, except end verticals.
BOT CHORD Rigid ceiling directly applied.
WEBS 1 Row at midpt 8-13, 6-13

REACTIONS. (size) 11=0-3-8, 18=0-3-8
Max Horz 18=245(LC 9)
Max Uplift 11=-227(LC 13), 18=-317(LC 12)
Max Grav 11=1543(LC 1), 18=1696(LC 1)

FORCES. (lb) - Max. Comp./Max. Ten. - All forces 250 (lb) or less except when shown.
TOP CHORD 2-18=-1733/393, 2-3=-4531/935, 3-5=-4424/1016, 5-6=-2422/450, 6-7=-1617/370, 7-8=-1622/374, 8-10=-1750/304, 10-11=-1473/277
BOT CHORD 17-18=-255/289, 16-17=-657/2720, 13-16=-381/2082, 12-13=-240/1475
WEBS 2-17=-759/3829, 7-13=-168/881, 8-13=-310/185, 8-12=-361/141, 10-12=-208/1480, 6-16=-61/591, 6-13=-990/327, 5-16=-717/311, 5-17=-417/1453

NOTES-
1) Unbalanced roof live loads have been considered for this design.
2) Wind: ASCE 7-16; Vult=115mph (3-second gust) Vasd=91mph; TCDL=6.0psf; BCDL=4.2psf; h=25ft; Cat. II; Exp C; Enclosed; MWFRS (envelope) gable end zone and C-C Exterior(2E) -1-11-0 to 1-1-0, Interior(1) 1-1-0 to 20-4-0, Exterior(2R) 20-4-0 to 23-4-0, Interior(1) 23-4-0 to 34-6-4 zone; cantilever left and right exposed ; end vertical left and right exposed;C-C for members and forces & MWFRS for reactions shown; Lumber DOL=1.60 plate grip DOL=1.60
3) This truss has been designed for a 10.0 psf bottom chord live load nonconcurrent with any other live loads.
4) Bearing at joint(s) 18 considers parallel to grain value using ANSI/TPI 1 angle to grain formula. Building designer should verify capacity of bearing surface.
5) Provide mechanical connection (by others) of truss to bearing plate capable of withstanding 100 lb uplift at joint(s) except (jt=lb) 11=227, 18=317.
6) This truss is designed in accordance with the 2018 International Residential Code sections R502.11.1 and R802.10.2 and referenced standard ANSI/TPI 1.
7) This truss design requires that a minimum of 7/16" structural wood sheathing be applied directly to the top chord and 1/2" gypsum sheetrock be applied directly to the bottom chord.

July 20,2021

MiTek
16023 Swingley Ridge Rd
Chesterfield, MO 63017

RELEASE FOR CONSTRUCTION
AS NOTED FOR PLAN REVIEW
DEVELOPMENT SERVICES
LEE'S SUMMIT, MISSOURI
10/22/2021

Job	Truss	Truss Type	Qty	Ply	Summit/59 Woodside
2935533	C1	Roof Special	2	1	I47079228 Job Reference (optional)

Builders FirstSource (Valley Center), Valley Center, KS - 67147, 8.430 s Jun 2 2021 MiTek Industries, Inc. Tue Jul 20 09:05:46 2021 Page 1
ID:VPVqvFnP0P0b1j2tZrlOqezdKbx-_uV5TvRMv4Fo8m_NraIS_9U4QXEPCoTPtw82wkywDN3

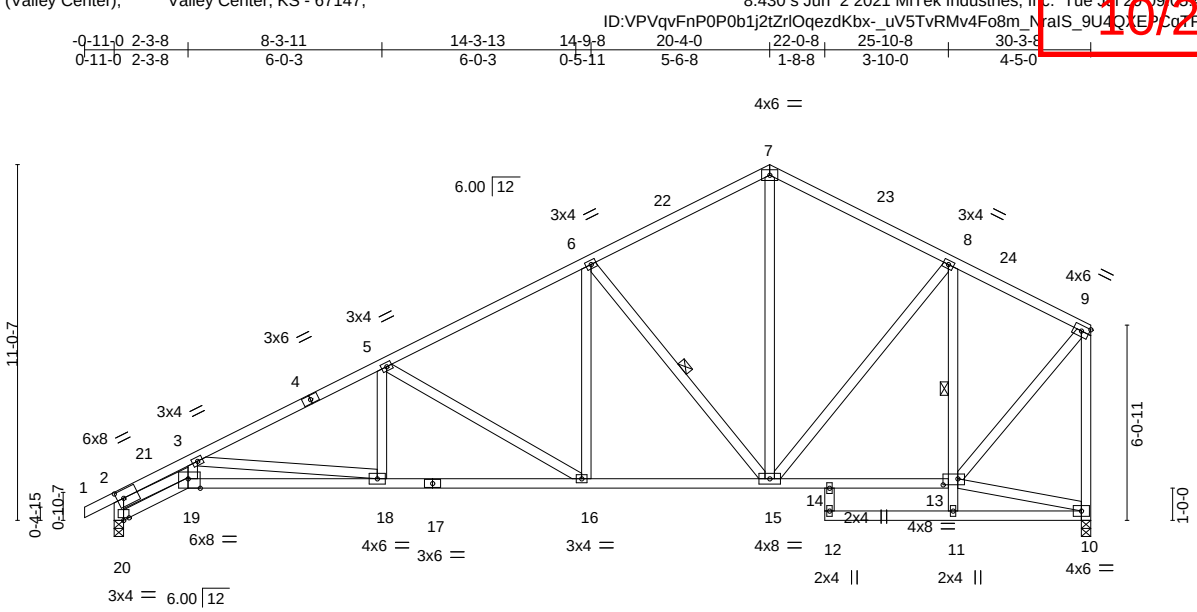

Plate Offsets (X,Y)-- [2:0-2-7,0-3-0], [13:0-5-8,0-2-4], [19:0-4-8,Edge]

LOADING (psf)		SPACING-	2-0-0	CSI.		DEFL.	in	(loc)	l/defl	L/d	PLATES	GRIP
TCLL	25.0	Plate Grip DOL	1.15	TC	0.66	Vert(LL)	-0.18	18-19	>999	240	MT20	197/144
TCDL	10.0	Lumber DOL	1.15	BC	0.98	Vert(CT)	-0.35	18-19	>999	180		
BCLL	0.0	Rep Stress Incr	YES	WB	0.82	Horz(CT)	0.22	10	n/a	n/a		
BCDL	10.0	Code IRC2018/TPI2014		Matrix-AS							Weight: 167 lb	FT = 20%

LUMBER-
TOP CHORD 2x4 SPF No.2
BOT CHORD 2x4 SPF No.2
WEBS 2x4 SPF No.2

BRACING-
TOP CHORD Structural wood sheathing directly applied, except end verticals.
BOT CHORD Rigid ceiling directly applied.
WEBS 1 Row at midpt 8-11, 6-15

REACTIONS. (size) 20=0-3-8, 10=0-3-8
Max Horz 20=315(LC 9)
Max Uplift 20=-267(LC 12), 10=-197(LC 12)
Max Grav 20=1426(LC 1), 10=1349(LC 1)

FORCES. (lb) - Max. Comp./Max. Ten. - All forces 250 (lb) or less except when shown.
TOP CHORD 2-20=-1428/355, 2-3=-4023/981, 3-5=-2564/505, 5-6=-1785/370, 6-7=-1140/313, 7-8=-1137/307, 8-9=-848/223, 9-10=-1287/264
BOT CHORD 19-20=-368/409, 18-19=-1012/3418, 16-18=-552/2250, 15-16=-366/1503, 14-15=-199/715, 13-14=-189/632
WEBS 2-19=-812/3350, 3-19=-223/651, 7-15=-145/554, 8-13=-759/214, 9-13=-220/1082, 8-15=-60/391, 6-16=-97/549, 6-15=-900/314, 5-16=-865/296, 5-18=-17/386, 3-18=-1178/481

NOTES-
1) Unbalanced roof live loads have been considered for this design.
2) Wind: ASCE 7-16; Vult=115mph (3-second gust) Vasd=91mph; TCDL=6.0psf; BCDL=4.2psf; h=25ft; Cat. II; Exp C; Enclosed; MWFRS (envelope) gable end zone and C-C Exterior(2E) -0-11-0 to 2-1-0, Interior(1) 2-1-0 to 20-4-0, Exterior(2R) 20-4-0 to 23-4-0, Interior(1) 23-4-0 to 30-1-12 zone; cantilever left and right exposed ; end vertical left and right exposed;C-C for members and forces & MWFRS for reactions shown; Lumber DOL=1.60 plate grip DOL=1.60
3) This truss has been designed for a 10.0 psf bottom chord live load nonconcurrent with any other live loads.
4) Bearing at joint(s) 20, 10 considers parallel to grain value using ANSI/TPI 1 angle to grain formula. Building designer should verify capacity of bearing surface.
5) Provide mechanical connection (by others) of truss to bearing plate capable of withstanding 100 lb uplift at joint(s) except (jt=lb) 20=267, 10=197.
6) This truss is designed in accordance with the 2018 International Residential Code sections R502.11.1 and R802.10.2 and referenced standard ANSI/TPI 1.
7) This truss design requires that a minimum of 7/16" structural wood sheathing be applied directly to the top chord and 1/2" gypsum sheetrock be applied directly to the bottom chord.

STATE OF MISSOURI
XUEGANG LIU
NUMBER E-29713
PROFESSIONAL ENGINEER

July 20,2021

MiTek
16023 Swingley Ridge Rd
Chesterfield, MO 63017

RELEASE FOR CONSTRUCTION
AS NOTED FOR PLAN REVIEW
DEVELOPMENT SERVICES
LEE'S SUMMIT, MISSOURI
10/22/2021

Job	Truss	Truss Type	Qty	Ply	Summit/59 Woodside I47079229
2935533	C1A	Roof Special	1	1	Job Reference (optional)

Builders FirstSource (Valley Center), Valley Center, KS - 67147, 8.430 s Jun 2 2021 MiTek Industries, Inc. Tue Jul 20 09:05:49 2021 Page 1
ID:VPVqvFnP0P0b1j2tZrlOqezdKbx-wHdruaTcRhVWO43ly?Lw3aaN4kvtdiziKEd9?dywDN1

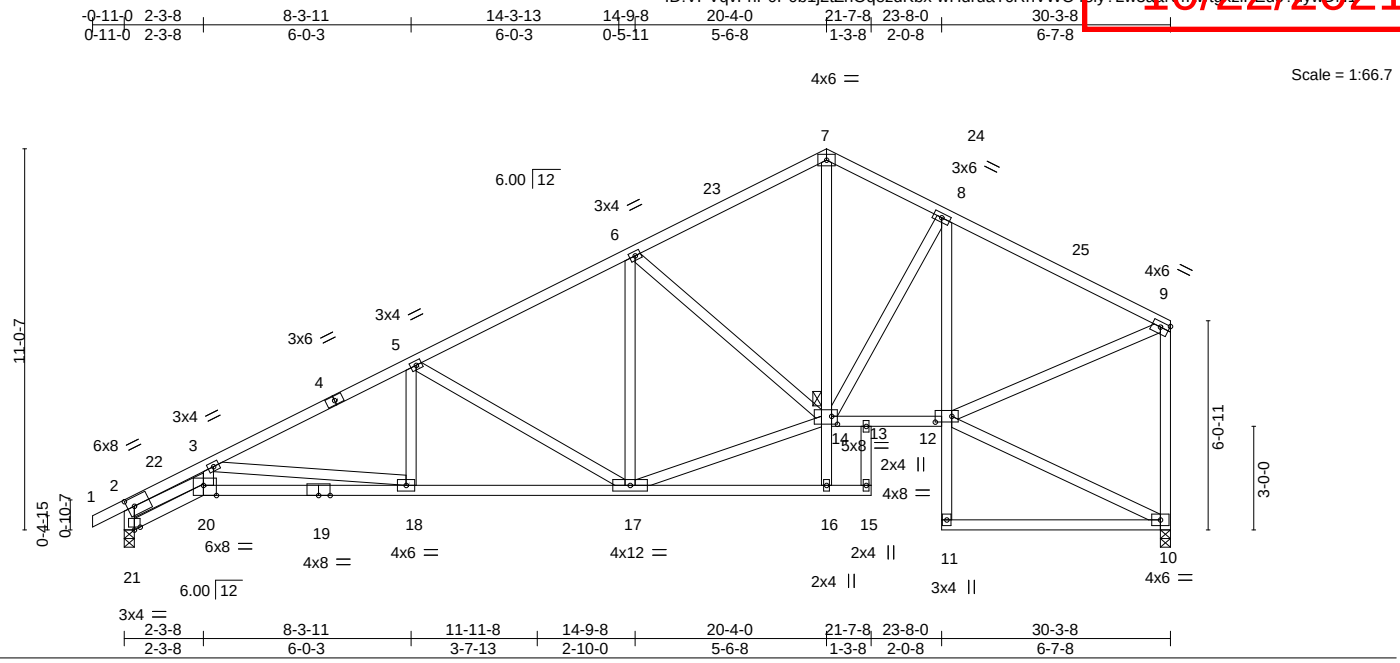

Plate Offsets (X,Y)-- [2:0-2-7,0-3-0], [9:Edge,0-1-12], [12:0-5-12,0-2-0], [14:0-2-0,0-2-12], [20:0-4-8,Edge]

LOADING (psf)		SPACING-	2-0-0	CSI.		DEFL.	in	(loc)	l/defl	L/d	PLATES	GRIP
TCLL	25.0	Plate Grip DOL	1.15	TC	0.84	Vert(LL)	-0.18	18-20	>999	240	MT20	197/144
TCDL	10.0	Lumber DOL	1.15	BC	0.98	Vert(CT)	-0.35	18-20	>999	180		
BCLL	0.0	Rep Stress Incr	YES	WB	0.82	Horz(CT)	0.24	10	n/a	n/a		
BCDL	10.0	Code IRC2018/TPI2014		Matrix-AS							Weight: 172 lb	FT = 20%

LUMBER-
TOP CHORD 2x4 SPF No.2
BOT CHORD 2x4 SPF No.2
WEBS 2x4 SPF No.2

BRACING-
TOP CHORD Structural wood sheathing directly applied, except end verticals.
BOT CHORD Rigid ceiling directly applied.
JOINTS 1 Brace at Jt(s): 14

REACTIONS. (size) 21=0-3-8, 10=0-3-8
Max Horz 21=315(LC 9)
Max Uplift 21=-267(LC 12), 10=-197(LC 12)
Max Grav 21=1426(LC 1), 10=1349(LC 1)

FORCES. (lb) - Max. Comp./Max. Ten. - All forces 250 (lb) or less except when shown.
TOP CHORD 2-21=-1428/355, 2-3=-4024/981, 3-5=-2563/505, 5-6=-1786/370, 6-7=-1376/327, 7-8=-1361/360, 8-9=-1400/303, 9-10=-1288/304
BOT CHORD 20-21=-368/409, 18-20=-1013/3419, 17-18=-552/2249, 13-14=-288/1124, 12-13=-302/1162, 8-12=-376/108
WEBS 2-20=-812/3352, 3-20=-223/651, 7-14=-190/875, 9-12=-273/1250, 5-17=-861/296, 5-18=-17/385, 6-14=-527/248, 3-18=-1180/481, 14-17=-376/1540

NOTES-
1) Unbalanced roof live loads have been considered for this design.
2) Wind: ASCE 7-16; Vult=115mph (3-second gust) Vasd=91mph; TCDL=6.0psf; BCDL=4.2psf; h=25ft; Cat. II; Exp C; Enclosed; MWFRS (envelope) gable end zone and C-C Exterior(2E) -0-11-0 to 2-1-0, Interior(1) 2-1-0 to 20-4-0, Exterior(2R) 20-4-0 to 23-4-0, Interior(1) 23-4-0 to 30-1-12 zone; cantilever left and right exposed ; end vertical left and right exposed;C-C for members and forces & MWFRS for reactions shown; Lumber DOL=1.60 plate grip DOL=1.60
3) This truss has been designed for a 10.0 psf bottom chord live load nonconcurrent with any other live loads.
4) Bearing at joint(s) 21, 10 considers parallel to grain value using ANSI/TPI 1 angle to grain formula. Building designer should verify capacity of bearing surface.
5) Provide mechanical connection (by others) of truss to bearing plate capable of withstanding 100 lb uplift at joint(s) except (jt=lb) 21=267, 10=197.
6) This truss is designed in accordance with the 2018 International Residential Code sections R502.11.1 and R802.10.2 and referenced standard ANSI/TPI 1.
7) This truss design requires that a minimum of 7/16" structural wood sheathing be applied directly to the top chord and 1/2" gypsum sheetrock be applied directly to the bottom chord.

July 20,2021

MiTek
16023 Swingley Ridge Rd
Chesterfield, MO 63017

Job	Truss	Truss Type	Qty	Ply	Summit/59 Woodside
2935533	C2	Roof Special	2	1	Job Reference (optional) I47079230

RELEASE FOR CONSTRUCTION
AS NOTED FOR PLAN REVIEW
DEVELOPMENT SERVICES
LEE'S SUMMIT, MISSOURI
10/22/2021

Builders FirstSource (Valley Center), Valley Center, KS - 67147, 8.430 s Jun 2 2021 MiTek Industries, Inc. Tue Jul 20 09:05:49 2021 Page 1
ID:VPVqvFnP0P0b1j2tZrlOqezdKbx-PTBD5wUEC?dN?DyWis9cnobzkJaPHKrZdNX3ywDN0

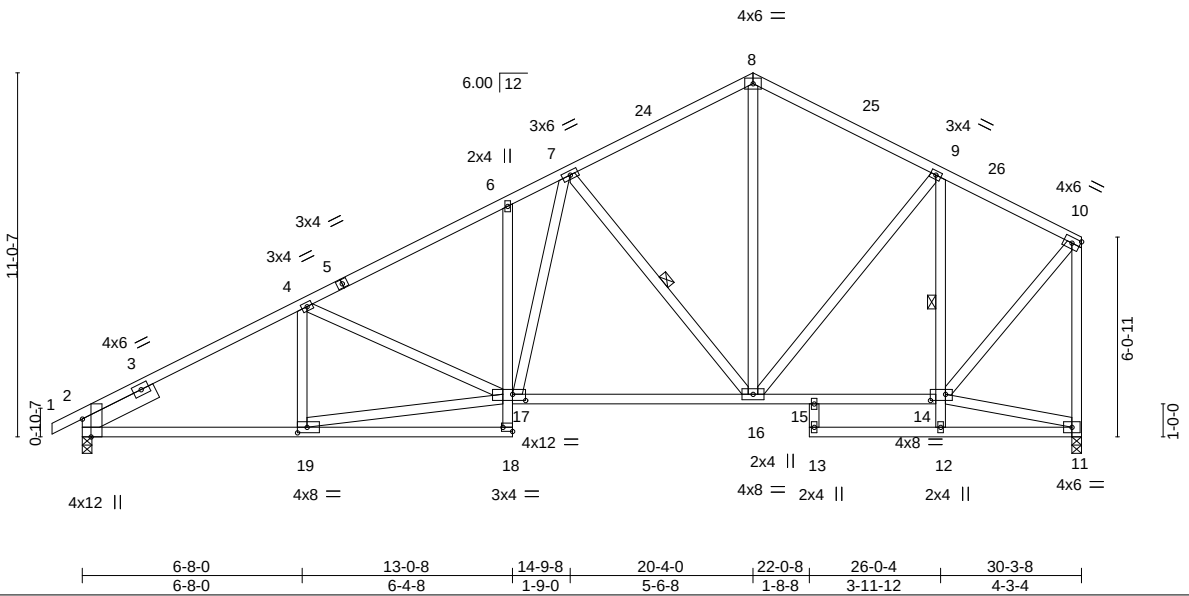

Plate Offsets (X,Y)-- [2:0-6-8,Edge], [14:0-5-8,0-2-4], [17:0-4-12,0-2-4], [18:Edge,0-1-8], [19:0-3-8,0-2-0]

LOADING (psf)		SPACING-	2-0-0	CSI.		DEFL.	in	(loc)	l/defl	L/d	PLATES	GRIP
TCLL	25.0	Plate Grip DOL	1.15	TC	0.66	Vert(LL)	-0.11	16-17	>999	240	MT20	197/144
TCDL	10.0	Lumber DOL	1.15	BC	0.76	Vert(CT)	-0.26	16-17	>999	180		
BCLL	0.0	Rep Stress Incr	YES	WB	0.43	Horz(CT)	0.08	11	n/a	n/a		
BCDL	10.0	Code IRC2018/TPI2014		Matrix-AS							Weight: 175 lb	FT = 20%

LUMBER-
TOP CHORD 2x4 SPF No.2
BOT CHORD 2x4 SPF No.2
WEBS 2x4 SPF No.2
SLIDER Left 2x6 SPF No.2 2-6-0

BRACING-
TOP CHORD Structural wood sheathing directly applied, except end verticals.
BOT CHORD Rigid ceiling directly applied.
WEBS 1 Row at midpt 9-12, 7-16

REACTIONS. (size) 2=0-3-8, 11=0-3-8
Max Horz 2=307(LC 11)
Max Uplift 2=-265(LC 12), 11=-198(LC 12)
Max Grav 2=1422(LC 1), 11=1356(LC 1)

FORCES. (lb) - Max. Comp./Max. Ten. - All forces 250 (lb) or less except when shown.
TOP CHORD 2-4=-2133/398, 4-6=-1988/400, 6-7=-1918/460, 7-8=-1146/311, 8-9=-1149/307, 9-10=-851/224, 10-11=-1292/264
BOT CHORD 2-19=-458/1829, 6-17=-288/127, 16-17=-367/1490, 15-16=-200/717, 14-15=-189/633
WEBS 17-19=-441/1760, 9-14=-773/211, 10-14=-220/1084, 8-16=-137/550, 7-16=-865/316, 9-16=-59/407, 7-17=-208/798

NOTES-
1) Unbalanced roof live loads have been considered for this design.
2) Wind: ASCE 7-16; Vult=115mph (3-second gust) Vasd=91mph; TCDL=6.0psf; BCDL=4.2psf; h=25ft; Cat. II; Exp C; Enclosed; MWFRS (envelope) gable end zone and C-C Exterior(2E) -0-11-0 to 2-1-0, Interior(1) 2-1-0 to 20-4-0, Exterior(2R) 20-4-0 to 23-4-0, Interior(1) 23-4-0 to 30-1-12 zone; cantilever left and right exposed ; end vertical left and right exposed;C-C for members and forces & MWFRS for reactions shown; Lumber DOL=1.60 plate grip DOL=1.60
3) This truss has been designed for a 10.0 psf bottom chord live load nonconcurrent with any other live loads.
4) Bearing at joint(s) 11 considers parallel to grain value using ANSI/TPI 1 angle to grain formula. Building designer should verify capacity of bearing surface.
5) Provide mechanical connection (by others) of truss to bearing plate capable of withstanding 100 lb uplift at joint(s) except (jt=lb) 2=265, 11=198.
6) This truss is designed in accordance with the 2018 International Residential Code sections R502.11.1 and R802.10.2 and referenced standard ANSI/TPI 1.
7) This truss design requires that a minimum of 7/16" structural wood sheathing be applied directly to the top chord and 1/2" gypsum sheetrock be applied directly to the bottom chord.

STATE OF MISSOURI
XUEGANG LIU
NUMBER E-29713
PROFESSIONAL ENGINEER

July 20,2021

MiTek
16023 Swingley Ridge Rd
Chesterfield, MO 63017

RELEASE FOR CONSTRUCTION
AS NOTED FOR PLAN REVIEW
DEVELOPMENT SERVICES
LEE'S SUMMIT, MISSOURI
10/22/2021

Job	Truss	Truss Type	Qty	Ply	Summit/59 Woodside
2935533	C3	Roof Special	4	1	I47079231 Job Reference (optional)

Builders FirstSource (Valley Center), Valley Center, KS - 67147, 8.430 s Jun 2 2021 MiTek Industries, Inc. Tue Jul 20 09:05:51 2021 Page 1
ID:VPVqvFnP0P0b1j2tZrlOqezdKbx-LsI_WcVVkct4FXtKe7udhCCx0YkUt3d80CsbcxywDM

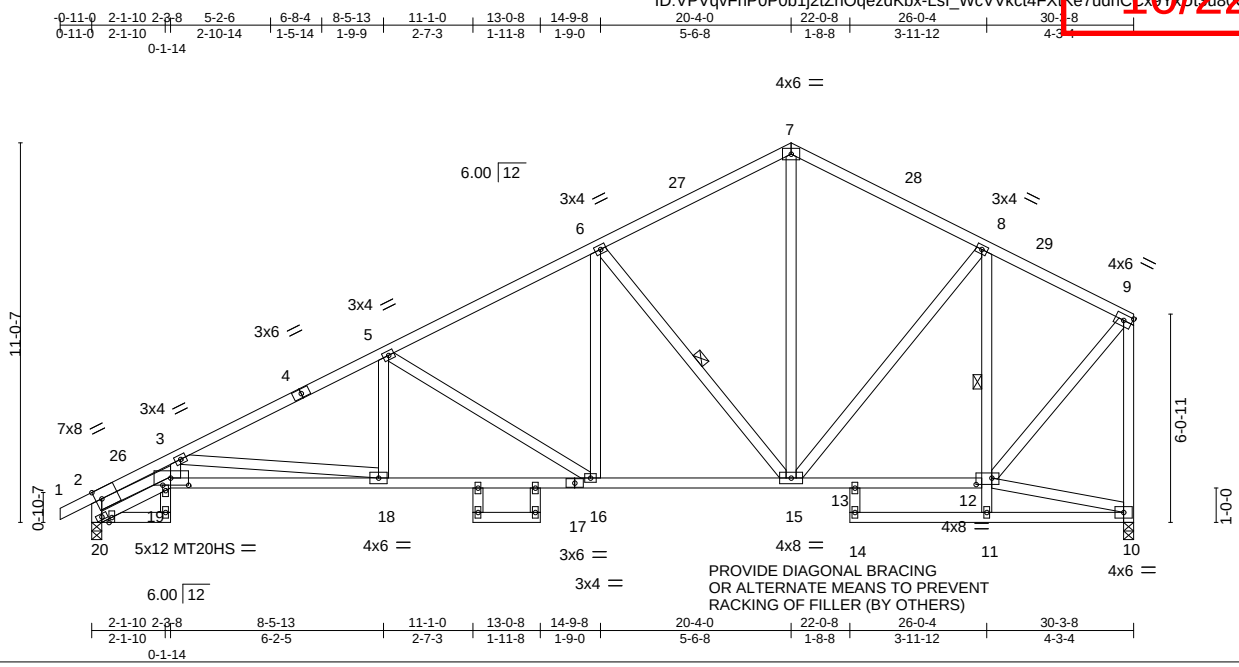

Plate Offsets (X,Y)-- [2:0-2-3,Edge], [12:0-5-8,0-2-4], [19:0-6-4,0-2-8], [19:0-1-14,0-1-0]

LOADING (psf)		SPACING-	2-0-0	CSI.		DEFL.	in	(loc)	l/defl	L/d	PLATES	GRIP
TCLL	25.0	Plate Grip DOL	1.15	TC	0.66	Vert(LL)	-0.19	18-19	>999	240	MT20	197/144
TCDL	10.0	Lumber DOL	1.15	BC	0.99	Vert(CT)	-0.37	18-19	>967	180	MT20HS	148/108
BCLL	0.0	Rep Stress Incr	YES	WB	0.94	Horz(CT)	0.22	10	n/a	n/a		
BCDL	10.0	Code IRC2018/TPI2014		Matrix-AS							Weight: 174 lb	FT = 20%

LUMBER-
TOP CHORD 2x4 SPF No.2
BOT CHORD 2x4 SPF No.2
WEBS 2x4 SPF No.2

BRACING-
TOP CHORD Structural wood sheathing directly applied, except end verticals.
BOT CHORD Rigid ceiling directly applied. Except:
8-0-0 oc bracing: 16-18
WEBS 1 Row at midpt 8-11, 6-15

REACTIONS. (size) 20=0-3-8, 10=0-3-8
Max Horz 20=307(LC 11)
Max Uplift 20=-267(LC 12), 10=-197(LC 12)
Max Grav 20=1426(LC 1), 10=1349(LC 1)

FORCES. (lb) - Max. Comp./Max. Ten. - All forces 250 (lb) or less except when shown.
TOP CHORD 2-3=-4033/990, 3-5=-2542/500, 5-6=-1780/372, 6-7=-1139/313, 7-8=-1137/307, 8-9=-848/223, 9-10=-1287/263
BOT CHORD 18-19=-1010/3448, 16-18=-545/2226, 15-16=-365/1501, 13-15=-199/715, 12-13=-189/632, 19-20=-430/110
WEBS 8-12=-759/214, 7-15=-143/552, 8-15=-60/392, 6-15=-896/313, 6-16=-102/556, 9-12=-220/1081, 5-16=-851/292, 5-18=-17/387, 2-20=-1277/329, 3-18=-1232/499, 3-19=-213/621, 2-19=-908/3826

NOTES-
1) Unbalanced roof live loads have been considered for this design.
2) Wind: ASCE 7-16; Vult=115mph (3-second gust) Vasd=91mph; TCDL=6.0psf; BCDL=4.2psf; h=25ft; Cat. II; Exp C; Enclosed; MWFRS (envelope) gable end zone and C-C Exterior(2E) -0-11-0 to 2-1-0, Interior(1) 2-1-0 to 20-4-0, Exterior(2R) 20-4-0 to 23-4-0, Interior(1) 23-4-0 to 30-1-12 zone; cantilever left and right exposed ; end vertical left and right exposed;C-C for members and forces & MWFRS for reactions shown; Lumber DOL=1.60 plate grip DOL=1.60
3) All plates are MT20 plates unless otherwise indicated.
4) All plates are 2x4 MT20 unless otherwise indicated.
5) This truss has been designed for a 10.0 psf bottom chord live load nonconcurrent with any other live loads.
6) Bearing at joint(s) 20, 10 considers parallel to grain value using ANSI/TPI 1 angle to grain formula. Building designer should verify capacity of bearing surface.
7) Provide mechanical connection (by others) of truss to bearing plate capable of withstanding 100 lb uplift at joint(s) except (jt=lb) 20=267, 10=197.
8) This truss is designed in accordance with the 2018 International Residential Code sections R502.11.1 and R802.10.2 and referenced standard ANSI/TPI 1.
9) This truss design requires that a minimum of 7/16" structural wood sheathing be applied directly to the top chord and 1/2" gypsum sheetrock be applied directly to the bottom chord.

STATE OF MISSOURI
XUEGANG LIU
NUMBER E-29713
PROFESSIONAL ENGINEER
July 20,2021

MiTek
16023 Swingley Ridge Rd
Chesterfield, MO 63017

RELEASE FOR CONSTRUCTION
AS NOTED FOR PLAN REVIEW
DEVELOPMENT SERVICES
LEE'S SUMMIT, MISSOURI
10/22/2021

Job	Truss	Truss Type	Qty	Ply	Summit/59 Woodside I47079232
2935533	C4	Roof Special	1	1	Job Reference (optional)

Builders FirstSource (Valley Center), Valley Center, KS - 67147, 8.430 s Jun 2 2021 MiTek Industries, Inc. Tue Jul 20 09:05:52 2021 Page 1
ID:VPVqvFnP0P0b1j2tZrlOqezdKbx-p2sMjyW7Vw?xshRXBrPsEQk6zxIYgWiHFsDNr7OywDMz

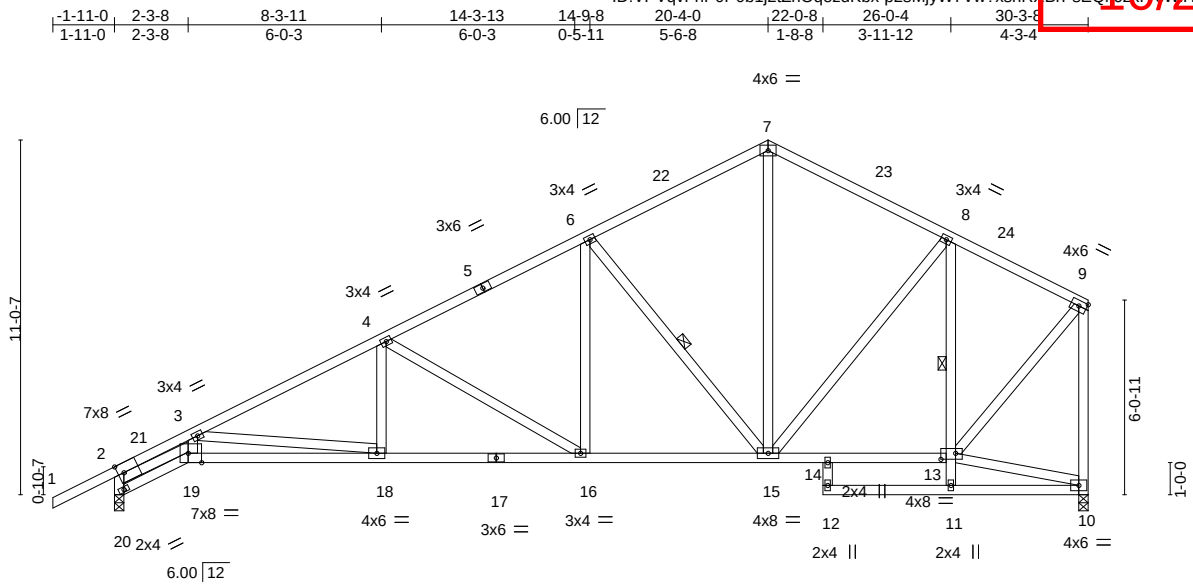

2-3-8 8-3-11 14-3-13 14-9-8 20-4-0 22-0-8 26-0-4 30-3-8
2-3-8 6-0-3 6-0-3 0-5-11 5-6-8 1-8-8 3-11-12 4-3-4

Plate Offsets (X,Y)-- [2:0-2-3,Edge], [13:0-5-8,0-2-4], [19:0-5-0,Edge]

LOADING (psf)		SPACING-	2-0-0	CSI.		DEFL.	in	(loc)	l/defl	L/d	PLATES	GRIP
TCLL	25.0	Plate Grip DOL	1.15	TC	0.65	Vert(LL)	-0.18	18-19	>999	240	MT20	197/144
TCDL	10.0	Lumber DOL	1.15	BC	0.94	Vert(CT)	-0.35	18-19	>999	180		
BCLL	0.0	Rep Stress Incr	YES	WB	0.90	Horz(CT)	0.21	10	n/a	n/a		
BCDL	10.0	Code IRC2018/TPI2014		Matrix-AS							Weight: 168 lb	FT = 20%

LUMBER-
TOP CHORD 2x4 SPF No.2
BOT CHORD 2x4 SPF No.2
WEBS 2x4 SPF No.2

BRACING-
TOP CHORD Structural wood sheathing directly applied, except end verticals.
BOT CHORD Rigid ceiling directly applied.
WEBS 1 Row at midpt 6-15, 8-11

REACTIONS. (size) 20=0-3-8, 10=0-3-8
Max Horz 20=316(LC 11)
Max Uplift 20=-291(LC 12), 10=-196(LC 12)
Max Grav 20=1499(LC 1), 10=1345(LC 1)

FORCES. (lb) - Max. Comp./Max. Ten. - All forces 250 (lb) or less except when shown.
TOP CHORD 2-3=-3880/939, 3-4=-2539/498, 4-6=-1776/368, 6-7=-1135/310, 7-8=-1132/306, 8-9=-845/221, 9-10=-1284/263
BOT CHORD 19-20=-445/99, 18-19=-976/3297, 16-18=-547/2228, 15-16=-364/1495, 14-15=-199/713, 13-14=-188/630
WEBS 3-19=-212/588, 3-18=-1078/444, 4-18=-11/382, 4-16=-849/291, 6-15=-893/312, 7-15=-144/550, 8-13=-757/213, 2-20=-1348/362, 8-15=-59/389, 2-19=-839/3678, 6-16=-95/542, 9-13=-219/1078

NOTES-
1) Unbalanced roof live loads have been considered for this design.
2) Wind: ASCE 7-16; Vult=115mph (3-second gust) Vasd=91mph; TCDL=6.0psf; BCDL=4.2psf; h=25ft; Cat. II; Exp C; Enclosed; MWFRS (envelope) gable end zone and C-C Exterior(2E) -1-11-0 to 1-1-0, Interior(1) 1-1-0 to 20-4-0, Exterior(2R) 20-4-0 to 23-4-0, Interior(1) 23-4-0 to 30-1-12 zone; cantilever left and right exposed ; end vertical left and right exposed;C-C for members and forces & MWFRS for reactions shown; Lumber DOL=1.60 plate grip DOL=1.60
3) This truss has been designed for a 10.0 psf bottom chord live load nonconcurrent with any other live loads.
4) Bearing at joint(s) 20, 10 considers parallel to grain value using ANSI/TPI 1 angle to grain formula. Building designer should verify capacity of bearing surface.
5) Provide mechanical connection (by others) of truss to bearing plate capable of withstanding 100 lb uplift at joint(s) except (jt=lb) 20=291, 10=196.
6) This truss is designed in accordance with the 2018 International Residential Code sections R502.11.1 and R802.10.2 and referenced standard ANSI/TPI 1.
7) This truss design requires that a minimum of 7/16" structural wood sheathing be applied directly to the top chord and 1/2" gypsum sheetrock be applied directly to the bottom chord.

STATE OF MISSOURI
XUEGANG LIU
NUMBER E-29713
PROFESSIONAL ENGINEER
July 20,2021

MiTek
16023 Swingley Ridge Rd
Chesterfield, MO 63017

Job	Truss	Truss Type	Qty	Ply	Summit/59 Woodside
2935533	C5	Common Supported Gable	1	1	Job Reference (optional)

RELEASE FOR CONSTRUCTION
AS NOTED FOR PLAN REVIEW
DEVELOPMENT SERVICES
LEE'S SUMMIT, MISSOURI
10/22/2021

Builders FirstSource (Valley Center), Valley Center, KS - 67147, 8.430 s Jun 2 2021 MiTek Industries, Inc. Tue Jul 20 09:05:54 2021 Page 1
ID:VPVqvFnP0P0b1j2tZrlOqezdKbx-lR_68eXN1XFf6?vJGSKJrqaolB04daiA4TBCywDMx

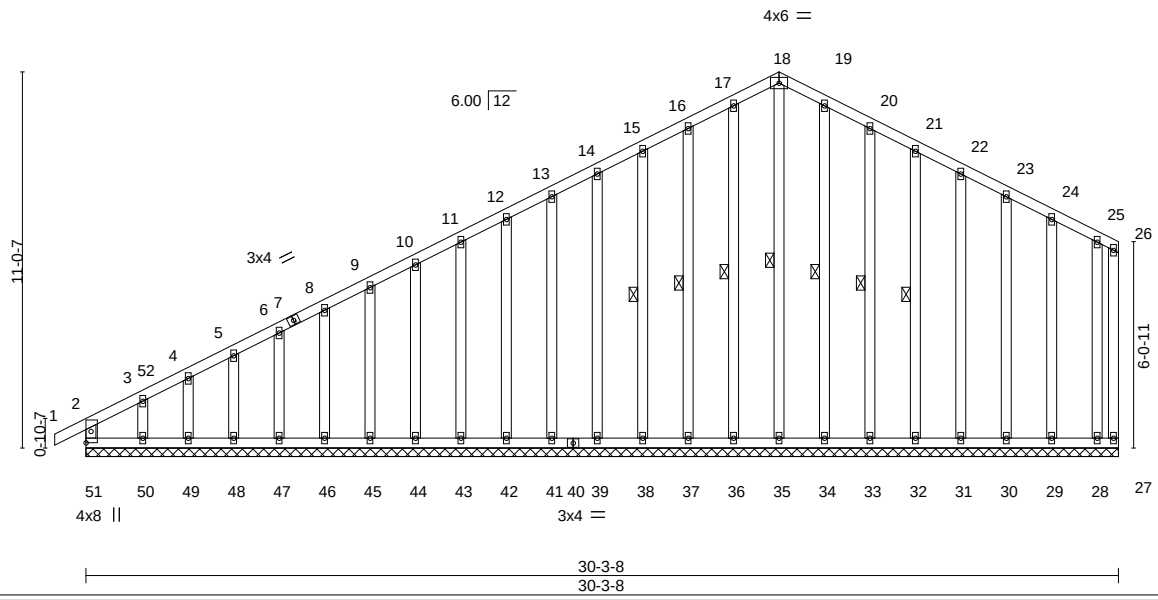

LOADING (psf)		SPACING-	2-0-0	CSI.		DEFL.	in	(loc)	l/defl	L/d	PLATES	GRIP
TCLL	25.0	Plate Grip DOL	1.15	TC	0.18	Vert(LL)	-0.00	1	n/r	120	MT20	197/144
TCDL	10.0	Lumber DOL	1.15	BC	0.10	Vert(CT)	-0.00	1	n/r	120		
BCLL	0.0	Rep Stress Incr	YES	WB	0.11	Horz(CT)	-0.00	27	n/a	n/a		
BCDL	10.0	Code IRC2018/TPI2014		Matrix-R							Weight: 243 lb	FT = 20%

LUMBER-

TOP CHORD	2x4 SPF No.2
BOT CHORD	2x4 SPF No.2
WEBS	2x4 SPF No.2
OTHERS	2x4 SPF No.2

BRACING-

TOP CHORD	Structural wood sheathing directly applied or 6-0-0 oc purlins, except end verticals.
BOT CHORD	Rigid ceiling directly applied or 10-0-0 oc bracing.
WEBS	1 Row at midpt 18-35, 17-36, 16-37, 15-38, 19-34, 20-33, 21-32

REACTIONS. All bearings 30-3-8.
(lb) - Max Horz 51=313(LC 9)
Max Uplift All uplift 100 lb or less at joint(s) 51, 27, 35, 36, 37, 38, 39, 41, 42, 43, 44, 45, 46, 47, 48, 49, 34, 33, 32, 31, 30, 29, 28 except 50=-204(LC 12)
Max Grav All reactions 250 lb or less at joint(s) 27, 35, 36, 37, 38, 39, 41, 42, 43, 44, 45, 46, 47, 48, 49, 50, 34, 33, 32, 31, 30, 29, 28 except 51=273(LC 20)

FORCES. (lb) - Max. Comp./Max. Ten. - All forces 250 (lb) or less except when shown.
TOP CHORD 2-3=-303/181, 15-16=-159/277, 16-17=-173/316, 17-18=-175/333, 18-19=-175/333, 19-20=-173/316, 20-21=-159/277

NOTES-
1) Unbalanced roof live loads have been considered for this design.
2) Wind: ASCE 7-16; Vult=115mph (3-second gust) Vasd=91mph; TCDL=6.0psf; BCDL=4.2psf; h=25ft; Cat. II; Exp C; Enclosed; MWFRS (envelope) gable end zone and C-C Corner(3E) -0-11-0 to 2-1-0, Exterior(2N) 2-1-0 to 20-4-0, Corner(3R) 20-4-0 to 23-4-0, Exterior(2N) 23-4-0 to 30-1-12 zone; cantilever left and right exposed ; end vertical left and right exposed;C-C for members and forces & MWFRS for reactions shown; Lumber DOL=1.60 plate grip DOL=1.60
3) Truss designed for wind loads in the plane of the truss only. For studs exposed to wind (normal to the face), see Standard Industry Gable End Details as applicable, or consult qualified building designer as per ANSI/TPI 1.
4) All plates are 2x4 MT20 unless otherwise indicated.
5) Gable requires continuous bottom chord bearing.
6) Truss to be fully sheathed from one face or securely braced against lateral movement (i.e. diagonal web).
7) Gable studs spaced at 1-4-0 oc.
8) This truss has been designed for a 10.0 psf bottom chord live load nonconcurrent with any other live loads.
9) Provide mechanical connection (by others) of truss to bearing plate capable of withstanding 100 lb uplift at joint(s) 51, 27, 35, 36, 37, 38, 39, 41, 42, 43, 44, 45, 46, 47, 48, 49, 34, 33, 32, 31, 30, 29, 28 except (jt=lb) 50=204.
10) This truss is designed in accordance with the 2018 International Residential Code sections R502.11.1 and R802.10.2 and referenced standard ANSI/TPI 1.

STATE OF MISSOURI
XUEGANG LIU
NUMBER E-29713
PROFESSIONAL ENGINEER

July 20,2021

MiTek
16023 Swingley Ridge Rd
Chesterfield, MO 63017

RELEASE FOR CONSTRUCTION
AS NOTED FOR PLAN REVIEW
DEVELOPMENT SERVICES
LEE'S SUMMIT, MISSOURI
10/22/2021

Job	Truss	Truss Type	Qty	Ply	Summit/59 Woodside I47079234
2935533	CJ1	Jack-Open	2	1	Job Reference (optional)

Builders FirstSource (Valley Center), Valley Center, KS - 67147, 8.430 s Jun 2 2021 MiTek Industries, Inc. Tue Jul 20 09:05:56 2021 Page 1
ID:VPVqvFnP0P0b1j2tZrlOqezdKbx-hp6tZJZdZ9VNLIIOgUoOGvw3ZtEYYdATZaG9ywDMv

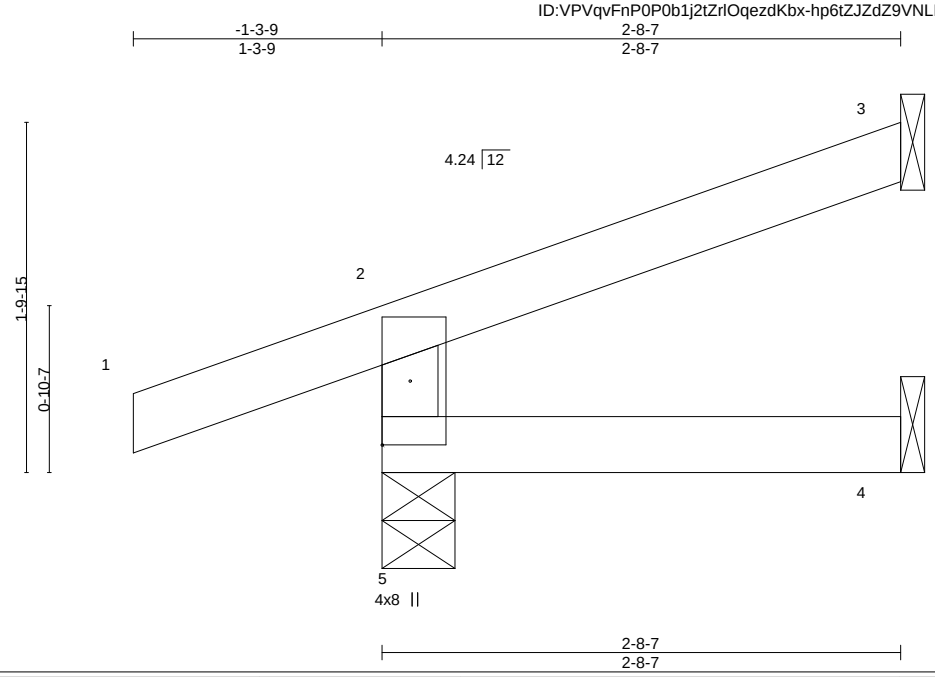

LOADING (psf)		SPACING-	2-0-0	CSI.		DEFL.	in	(loc)	l/defl	L/d	PLATES	GRIP
TCLL	25.0	Plate Grip DOL	1.15	TC	0.14	Vert(LL)	-0.00	4-5	>999	240	MT20	197/144
TCDL	10.0	Lumber DOL	1.15	BC	0.05	Vert(CT)	-0.00	4-5	>999	180		
BCLL	0.0	Rep Stress Incr	YES	WB	0.00	Horz(CT)	-0.00	3	n/a	n/a		
BCDL	10.0	Code IRC2018/TPI2014		Matrix-MR							Weight: 8 lb	FT = 20%

LUMBER-
TOP CHORD 2x4 SPF No.2
BOT CHORD 2x4 SPF No.2
WEBS 2x4 SPF No.2

BRACING-
TOP CHORD Structural wood sheathing directly applied or 2-8-7 oc purlins, except end verticals.
BOT CHORD Rigid ceiling directly applied or 10-0-0 oc bracing.

REACTIONS. (size) 5=0-4-9, 3=Mechanical, 4=Mechanical
Max Horz 5=53(LC 8)
Max Uplift 5=-86(LC 8), 3=-36(LC 12)
Max Grav 5=242(LC 1), 3=63(LC 1), 4=45(LC 3)

FORCES. (lb) - Max. Comp./Max. Ten. - All forces 250 (lb) or less except when shown.

NOTES-
1) Wind: ASCE 7-16; Vult=115mph (3-second gust) Vasd=91mph; TCDL=6.0psf; BCDL=4.2psf; h=25ft; Cat. II; Exp C; Enclosed; MWFRS (envelope) gable end zone and C-C Corner(3) zone; cantilever left and right exposed ; end vertical left and right exposed;C-C for members and forces & MWFRS for reactions shown; Lumber DOL=1.60 plate grip DOL=1.60
2) This truss has been designed for a 10.0 psf bottom chord live load nonconcurrent with any other live loads.
3) Refer to girder(s) for truss to truss connections.
4) Provide mechanical connection (by others) of truss to bearing plate capable of withstanding 100 lb uplift at joint(s) 5, 3.
5) This truss is designed in accordance with the 2018 International Residential Code sections R502.11.1 and R802.10.2 and referenced standard ANSI/TPI 1.

STATE OF MISSOURI
XUEGANG LIU
NUMBER E-29713
PROFESSIONAL ENGINEER
Xm Liu
July 20,2021

MiTek
16023 Swingley Ridge Rd
Chesterfield, MO 63017

RELEASE FOR CONSTRUCTION
AS NOTED FOR PLAN REVIEW
DEVELOPMENT SERVICES
LEE'S SUMMIT, MISSOURI
10/22/2021

Job	Truss	Truss Type	Qty	Ply	Summit/59 Woodside
2935533	D1	Hip Girder	1	1	Job Reference (optional) I47079235

Builders FirstSource (Valley Center), Valley Center, KS - 67147, 8.430 s Jun 2 2021 MiTek Industries, Inc. Tue Jul 20 09:05:57 2021 Page 1
ID:VPVqvFnP0P0b1j2tZrlOqezdKbx-A0gFmfaGJSeEzSKU_O?1xTR?gy5vHzQOQ7J7obywDMu

-0-11-0	2-0-0	6-0-0	10-0-0	12-0-0	12-11-0
0-11-0	2-0-0	4-0-0	4-0-0	2-0-0	0-11-0

Scale = 1:22.9

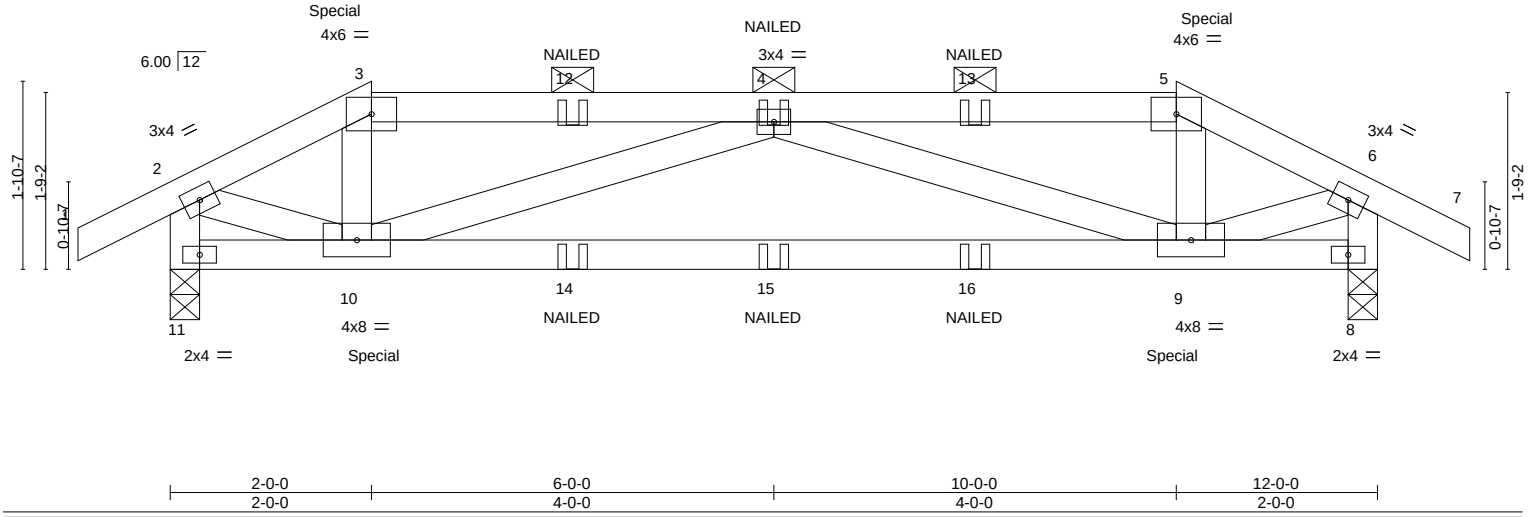

2-0-0	6-0-0	10-0-0	12-0-0
2-0-0	4-0-0	4-0-0	2-0-0

LOADING (psf)		SPACING-	2-0-0	CSI.		DEFL.	in	(loc)	l/defl	L/d	PLATES	GRIP
TCLL	25.0	Plate Grip DOL	1.15	TC	0.21	Vert(LL)	-0.09	9-10	>999	240	MT20	197/144
TCDL	10.0	Lumber DOL	1.15	BC	0.54	Vert(CT)	-0.19	9-10	>729	180		
BCLL	0.0	Rep Stress Incr	NO	WB	0.18	Horz(CT)	0.01	8	n/a	n/a		
BCDL	10.0	Code IRC2018/TPI2014		Matrix-MS							Weight: 47 lb	FT = 20%

LUMBER-
TOP CHORD 2x4 SPF No.2
BOT CHORD 2x4 SPF No.2
WEBS 2x4 SPF No.2

BRACING-
TOP CHORD Structural wood sheathing directly applied or 6-0-0 oc purlins, except 2-0-0 oc purlins (6-0-0 max.): 3-5.
BOT CHORD Rigid ceiling directly applied or 10-0-0 oc bracing.

REACTIONS. (size) 11=0-3-8, 8=0-3-8
Max Horz 11=24(LC 8)
Max Uplift 11=-159(LC 8), 8=-159(LC 9)
Max Grav 11=597(LC 1), 8=597(LC 1)

FORCES. (lb) - Max. Comp./Max. Ten. - All forces 250 (lb) or less except when shown.
TOP CHORD 2-3=-672/158, 3-4=-575/153, 4-5=-575/153, 5-6=-672/158
BOT CHORD 9-10=-318/1031
WEBS 4-10=-495/208, 4-9=-495/208, 6-8=-632/151, 2-11=-632/151, 2-10=-129/621, 6-9=-129/621

NOTES-
1) Unbalanced roof live loads have been considered for this design.
2) Wind: ASCE 7-16; Vult=115mph (3-second gust) Vasd=91mph; TCDL=6.0psf; BCDL=4.2psf; h=25ft; Cat. II; Exp C; Enclosed; MWFRS (envelope) gable end zone; cantilever left and right exposed ; end vertical left and right exposed; Lumber DOL=1.60 plate grip DOL=1.60
3) Provide adequate drainage to prevent water ponding.
4) This truss has been designed for a 10.0 psf bottom chord live load nonconcurrent with any other live loads.
5) Bearing at joint(s) 11, 8 considers parallel to grain value using ANSI/TPI 1 angle to grain formula. Building designer should verify capacity of bearing surface.
6) Provide mechanical connection (by others) of truss to bearing plate capable of withstanding 100 lb uplift at joint(s) except (jt=lb) 11=159, 8=159.
7) This truss is designed in accordance with the 2018 International Residential Code sections R502.11.1 and R802.10.2 and referenced standard ANSI/TPI 1.
8) Graphical purlin representation does not depict the size or the orientation of the purlin along the top and/or bottom chord.
9) "NAILED" indicates 3-10d (0.148"x3") or 3-12d (0.148"x3.25") toe-nails per NDS guidlines.
10) Hanger(s) or other connection device(s) shall be provided sufficient to support concentrated load(s) 35 lb down and 79 lb up at 2-0-0, and 35 lb down and 79 lb up at 10-0-0 on top chord, and 21 lb down and 9 lb up at 2-0-0, and 21 lb down and 9 lb up at 9-11-4 on bottom chord. The design/selection of such connection device(s) is the responsibility of others.
11) In the LOAD CASE(S) section, loads applied to the face of the truss are noted as front (F) or back (B).

LOAD CASE(S) Standard
1) Dead + Roof Live (balanced): Lumber Increase=1.15, Plate Increase=1.15
Uniform Loads (plf)
Vert: 1-3=-70, 3-5=-70, 5-7=-70, 8-11=-20

STATE OF MISSOURI
XUEGANG LIU
NUMBER E-29713
PROFESSIONAL ENGINEER
July 20,2021

Continued on page 2

MiTek
16023 Swingley Ridge Rd
Chesterfield, MO 63017

LOAD CASE(S) Standard
Concentrated Loads (lb)
Vert: 10=3(B) 9=3(B) 14=1(B) 15=1(B) 16=1(B)

RELEASE FOR CONSTRUCTION
AS NOTED FOR PLAN REVIEW
DEVELOPMENT SERVICES
LEE'S SUMMIT, MISSOURI
10/22/2021

Job	Truss	Truss Type	Qty	Ply	Summit/59 Woodside
2935533	D2	Hip	1	1	I47079236 Job Reference (optional)

Builders FirstSource (Valley Center), Valley Center, KS - 67147, 8.430 s Jun 2 2021 MiTek Industries, Inc. Tue Jul 20 09:05:58 2021 Page 1
ID:VPVqvFnP0P0b1j2tZrlOqezdKbx-eCDd_?bu4mm5acvgY5VGTh_FvMVwOSpAdr2hK2ywOMt

-0-11-0 | 4-0-0 | 8-0-0 | 12-0-0 | 12-11-0
0-11-0 | 4-0-0 | 4-0-0 | 4-0-0 | 0-11-0

Scale = 1:22.9

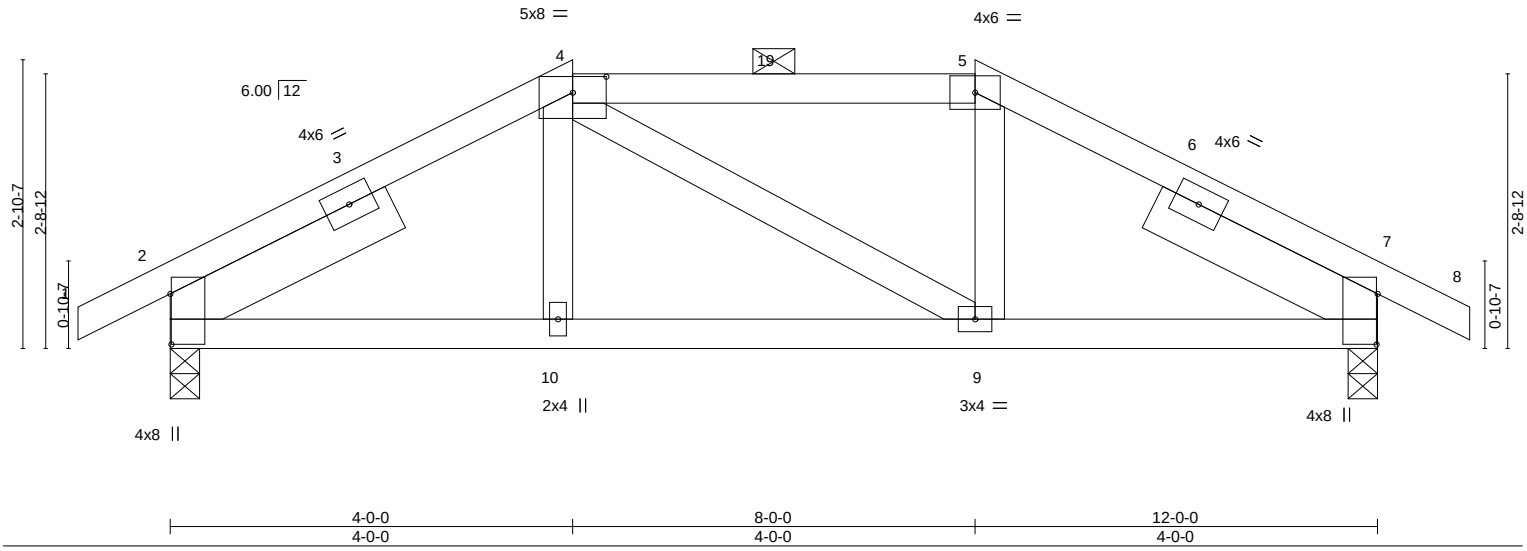

4-0-0 | 8-0-0 | 12-0-0
4-0-0 | 4-0-0 | 4-0-0

Plate Offsets (X,Y)-- [2:0-6-0,0-0-2], [4:0-4-0,0-1-15], [7:0-6-0,0-0-2]

LOADING (psf)		SPACING-	2-0-0	CSI.		DEFL.	in	(loc)	l/defl	L/d	PLATES	GRIP
TCLL	25.0	Plate Grip DOL	1.15	TC	0.24	Vert(LL)	-0.02	9-10	>999	240	MT20	197/144
TCDL	10.0	Lumber DOL	1.15	BC	0.23	Vert(CT)	-0.04	9-10	>999	180		
BCLL	0.0	Rep Stress Incr	YES	WB	0.03	Horz(CT)	0.01	7	n/a	n/a		
BCDL	10.0	Code IRC2018/TPI2014		Matrix-AS							Weight: 50 lb	FT = 20%

LUMBER-
TOP CHORD 2x4 SPF No.2
BOT CHORD 2x4 SPF No.2
WEBS 2x4 SPF No.2
SLIDER Left 2x6 SPF No.2 2-6-0, Right 2x6 SPF No.2 2-6-0

BRACING-
TOP CHORD Structural wood sheathing directly applied, except 2-0-0 oc purlins (6-0-0 max.): 4-5.
BOT CHORD Rigid ceiling directly applied.

REACTIONS. (size) 2=0-3-8, 7=0-3-8
Max Horz 2=42(LC 12)
Max Uplift 2=-113(LC 12), 7=-113(LC 13)
Max Grav 2=604(LC 1), 7=604(LC 1)

FORCES. (lb) - Max. Comp./Max. Ten. - All forces 250 (lb) or less except when shown.
TOP CHORD 2-4=-682/266, 4-5=-586/276, 5-7=-682/266
BOT CHORD 2-10=-151/590, 9-10=-153/586, 7-9=-154/590

NOTES-
1) Unbalanced roof live loads have been considered for this design.
2) Wind: ASCE 7-16; Vult=115mph (3-second gust) Vasd=91mph; TCDL=6.0psf; BCDL=4.2psf; h=25ft; Cat. II; Exp C; Enclosed; MWFRS (envelope) gable end zone and C-C Exterior(2E) -0-11-0 to 2-1-0, Interior(1) 2-1-0 to 4-0-0, Exterior(2E) 4-0-0 to 8-0-0, Exterior(2R) 8-0-0 to 12-0-0, Interior(1) 12-0-0 to 12-11-0 zone; cantilever left and right exposed ; end vertical left and right exposed;C-C for members and forces & MWFRS for reactions shown; Lumber DOL=1.60 plate grip DOL=1.60
3) Provide adequate drainage to prevent water ponding.
4) This truss has been designed for a 10.0 psf bottom chord live load nonconcurrent with any other live loads.
5) Provide mechanical connection (by others) of truss to bearing plate capable of withstanding 100 lb uplift at joint(s) except (jt=lb) 2=113, 7=113.
6) This truss is designed in accordance with the 2018 International Residential Code sections R502.11.1 and R802.10.2 and referenced standard ANSI/TPI 1.
7) This truss design requires that a minimum of 7/16" structural wood sheathing be applied directly to the top chord and 1/2" gypsum sheetrock be applied directly to the bottom chord.
8) Graphical purlin representation does not depict the size or the orientation of the purlin along the top and/or bottom chord.

STATE OF MISSOURI
XUEGANG LIU
NUMBER E-29713
PROFESSIONAL ENGINEER
July 20,2021

MiTek
16023 Swingley Ridge Rd
Chesterfield, MO 63017

RELEASE FOR CONSTRUCTION
AS NOTED FOR PLAN REVIEW
DEVELOPMENT SERVICES
LEE'S SUMMIT, MISSOURI
10/22/2021

Job	Truss	Truss Type	Qty	Ply	Summit/59 Woodside I47079237
2935533	D3	Common	3	1	Job Reference (optional)

Builders FirstSource (Valley Center), Valley Center, KS - 67147, 8.430 s Jun 2 2021 MiTek Industries, Inc. Tue Jul 20 09:05:59 2021 Page 1
ID:VPVqvFnP0P0b1j2tZrlOqezdKbx-6On?BLbWr4uyCmUt6p1V0uXOpInrgb1JsRobtUywOMs

-0-11-0 | 6-0-0 | 12-0-0 | 12-11-0
0-11-0 | 6-0-0 | 6-0-0 | 0-11-0

Scale = 1:25.5

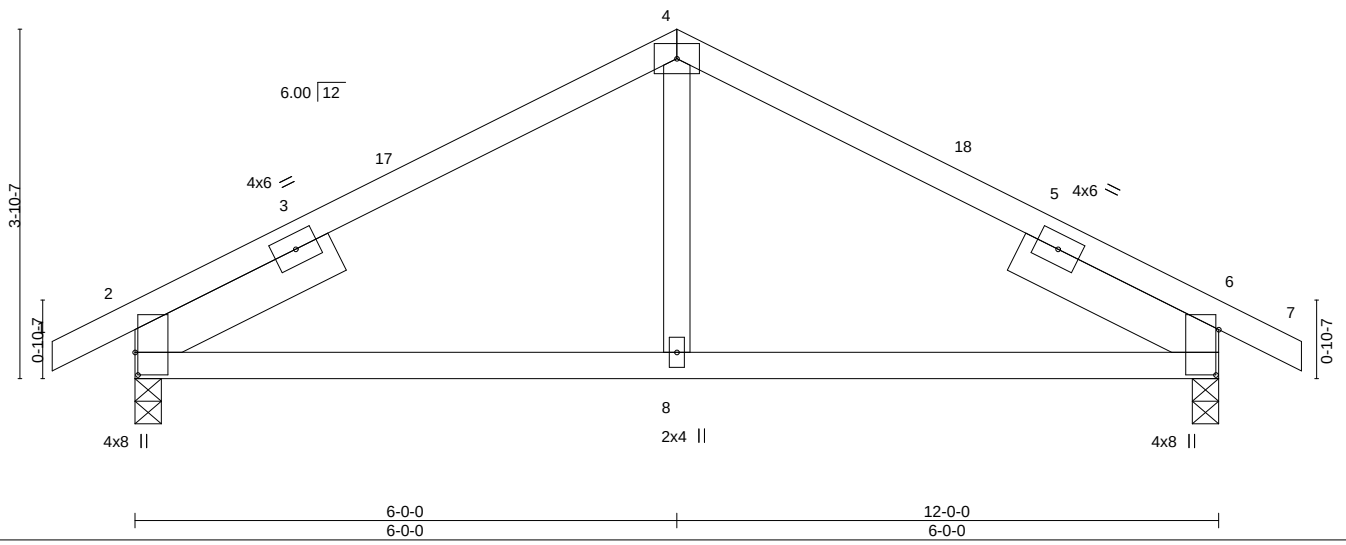

Plate Offsets (X,Y)-- [2:0-3-0,0-0-6], [6:0-6-0,0-0-6]

LOADING (psf)		SPACING-	2-0-0	CSI.		DEFL.	in	(loc)	l/defl	L/d	PLATES	GRIP
TCLL	25.0	Plate Grip DOL	1.15	TC	0.29	Vert(LL)	-0.04	8-11	>999	240	MT20	197/144
TCDL	10.0	Lumber DOL	1.15	BC	0.26	Vert(CT)	-0.06	8-11	>999	180		
BCLL	0.0	Rep Stress Incr	YES	WB	0.05	Horz(CT)	0.02	2	n/a	n/a		
BCDL	10.0	Code IRC2018/TPI2014		Matrix-AS							Weight: 44 lb	FT = 20%

LUMBER-
TOP CHORD 2x4 SPF No.2
BOT CHORD 2x4 SPF No.2
WEBS 2x4 SPF No.2
SLIDER Left 2x6 SPF No.2 2-6-0, Right 2x6 SPF No.2 2-6-0

BRACING-
TOP CHORD Structural wood sheathing directly applied.
BOT CHORD Rigid ceiling directly applied.

REACTIONS. (size) 2=0-3-8, 6=0-3-8
Max Horz 2=61(LC 12)
Max Uplift 2=-108(LC 12), 6=-108(LC 13)
Max Grav 2=604(LC 1), 6=604(LC 1)

FORCES. (lb) - Max. Comp./Max. Ten. - All forces 250 (lb) or less except when shown.
TOP CHORD 2-4=-581/271, 4-6=-581/271
BOT CHORD 2-8=-113/507, 6-8=-113/507

NOTES-
1) Unbalanced roof live loads have been considered for this design.
2) Wind: ASCE 7-16; Vult=115mph (3-second gust) Vasd=91mph; TCDL=6.0psf; BCDL=4.2psf; h=25ft; Cat. II; Exp C; Enclosed; MWFRS (envelope) gable end zone and C-C Exterior(2E) -0-11-0 to 2-1-0, Interior(1) 2-1-0 to 6-0-0, Exterior(2R) 6-0-0 to 9-0-0, Interior(1) 9-0-0 to 12-11-0 zone; cantilever left and right exposed ; end vertical left and right exposed;C-C for members and forces & MWFRS for reactions shown; Lumber DOL=1.60 plate grip DOL=1.60
3) This truss has been designed for a 10.0 psf bottom chord live load nonconcurrent with any other live loads.
4) Provide mechanical connection (by others) of truss to bearing plate capable of withstanding 100 lb uplift at joint(s) except (jt=lb) 2=108, 6=108.
5) This truss is designed in accordance with the 2018 International Residential Code sections R502.11.1 and R802.10.2 and referenced standard ANSI/TPI 1.
6) This truss design requires that a minimum of 7/16" structural wood sheathing be applied directly to the top chord and 1/2" gypsum sheetrock be applied directly to the bottom chord.

July 20,2021

MiTek
16023 Swingley Ridge Rd
Chesterfield, MO 63017

Job	Truss	Truss Type	Qty	Ply	Summit/59 Woodside
2935533	E3	Monopitch Supported Gable	1	1	Job Reference (optional)

RELEASE FOR CONSTRUCTION
AS NOTED FOR PLAN REVIEW
DEVELOPMENT SERVICES
LEE'S SUMMIT, MISSOURI
10/22/2021

Builders FirstSource (Valley Center), Valley Center, KS - 67147, 8.430 s Jun 2 2021 MiTek Industries, Inc. Tue Jul 20 09:06:00 2021 Page 1
ID:VPVqvFnP0P0b1j2tZrlOqezdKbx-abLNPhc8cN0pqw33WYkY63LtADdUM4T55XcPwywDMr

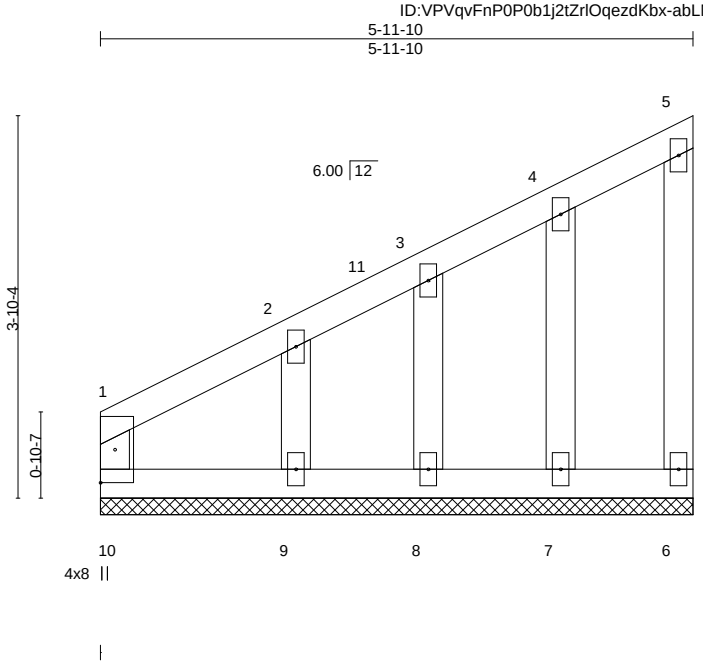

LOADING (psf)		SPACING-	2-0-0	CSI.		DEFL.	in	(loc)	l/defl	L/d	PLATES	GRIP
TCLL	25.0	Plate Grip DOL	1.15	TC	0.15	Vert(LL)	n/a	-	n/a	999	MT20	197/144
TCDL	10.0	Lumber DOL	1.15	BC	0.15	Vert(CT)	n/a	-	n/a	999		
BCLL	0.0	Rep Stress Incr	YES	WB	0.05	Horz(CT)	0.00	6	n/a	n/a		
BCDL	10.0	Code IRC2018/TPI2014		Matrix-R							Weight: 25 lb	FT = 20%

LUMBER-
TOP CHORD 2x4 SPF No.2
BOT CHORD 2x4 SPF No.2
WEBS 2x4 SPF No.2
OTHERS 2x4 SPF No.2

BRACING-
TOP CHORD Structural wood sheathing directly applied or 5-11-10 oc purlins, except end verticals.
BOT CHORD Rigid ceiling directly applied or 10-0-0 oc bracing.

REACTIONS. All bearings 5-11-10.
(lb) - Max Horz 10=142(LC 9)
Max Uplift All uplift 100 lb or less at joint(s) 10, 6, 7, 8 except 9=-104(LC 12)
Max Grav All reactions 250 lb or less at joint(s) 10, 6, 7, 8, 9

FORCES. (lb) - Max. Comp./Max. Ten. - All forces 250 (lb) or less except when shown.
TOP CHORD 1-2=-328/170
WEBS 2-9=-144/260

NOTES-
1) Wind: ASCE 7-16; Vult=115mph (3-second gust) Vasd=91mph; TCDL=6.0psf; BCDL=4.2psf; h=25ft; Cat. II; Exp C; Enclosed; MWFRS (envelope) gable end zone and C-C Corner(3E) 0-1-12 to 3-3-10, Exterior(2N) 3-3-10 to 5-9-14 zone; cantilever left and right exposed ; end vertical left and right exposed;C-C for members and forces & MWFRS for reactions shown; Lumber DOL=1.60 plate grip DOL=1.60
2) Truss designed for wind loads in the plane of the truss only. For studs exposed to wind (normal to the face), see Standard Industry Gable End Details as applicable, or consult qualified building designer as per ANSI/TPI 1.
3) All plates are 2x4 MT20 unless otherwise indicated.
4) Gable requires continuous bottom chord bearing.
5) Truss to be fully sheathed from one face or securely braced against lateral movement (i.e. diagonal web).
6) Gable studs spaced at 1-4-0 oc.
7) This truss has been designed for a 10.0 psf bottom chord live load nonconcurrent with any other live loads.
8) Provide mechanical connection (by others) of truss to bearing plate capable of withstanding 100 lb uplift at joint(s) 10, 6, 7, 8 except (jt=lb) 9=104.
9) This truss is designed in accordance with the 2018 International Residential Code sections R502.11.1 and R802.10.2 and referenced standard ANSI/TPI 1.

STATE OF MISSOURI
XUEGANG LIU
NUMBER E-29713
PROFESSIONAL ENGINEER

July 20,2021

MiTek
16023 Swingley Ridge Rd
Chesterfield, MO 63017

RELEASE FOR CONSTRUCTION
AS NOTED FOR PLAN REVIEW
DEVELOPMENT SERVICES
LEE'S SUMMIT, MISSOURI
10/22/2021

Job	Truss	Truss Type	Qty	Ply	Summit/59 Woodside I47079239
2935533	F1	Common Supported Gable	1	1	Job Reference (optional)

Builders FirstSource (Valley Center), Valley Center, KS - 67147, 8.430 s Jun 2 2021 MiTek Industries, Inc. Tue Jul 20 09:06:03 2021 Page 1
ID:VPVqvFnP0P0b1j2tZrlOqezdKbx-_A1W1je1vIOOhNneUf6RAkh8aNGMMiEvn3nS0FywDMo

-0-11-0 / 0-11-0 | 6-0-0 / 6-0-0 | 12-0-0 / 6-0-0 | 12-11-0 / 0-11-0

Scale = 1:22.2

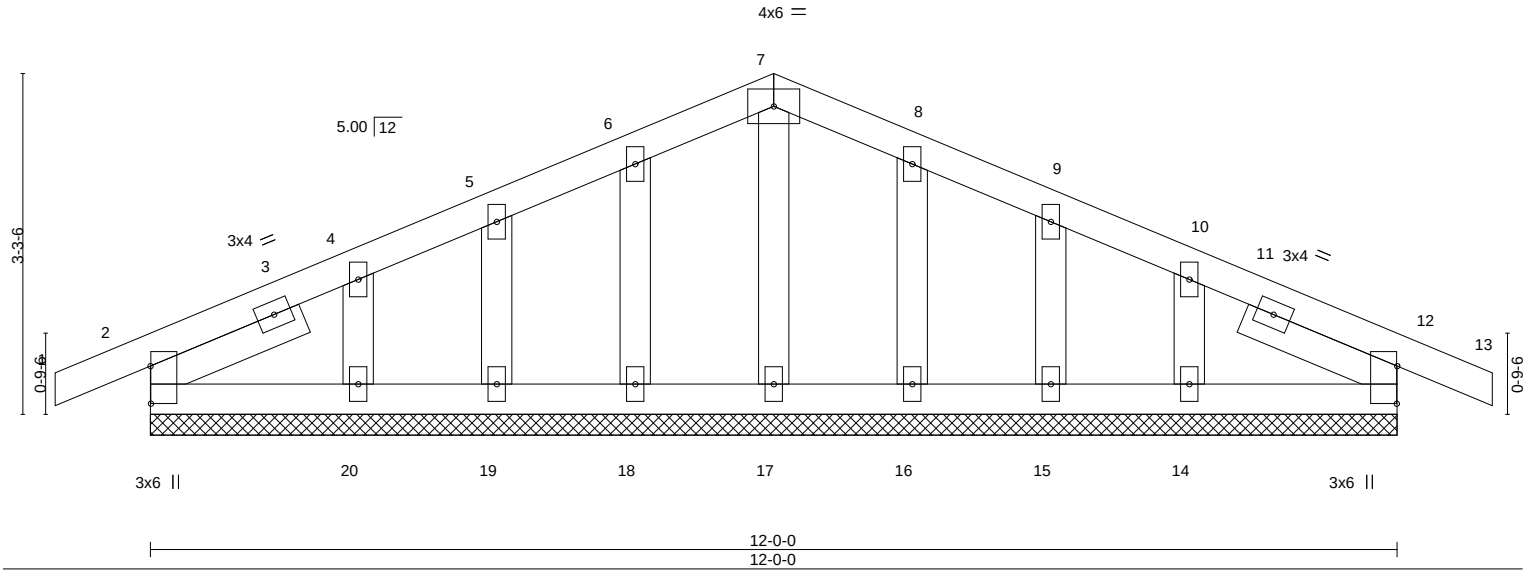

Plate Offsets (X,Y)-- [2:0-4-5,0-0-1], [12:0-4-5,0-0-1]

LOADING (psf)		SPACING-	2-0-0	CSI.		DEFL.	in	(loc)	l/defl	L/d	PLATES	GRIP
TCLL	25.0	Plate Grip DOL	1.15	TC	0.05	Vert(LL)	-0.00	12	n/r	120	MT20	197/144
TCDL	10.0	Lumber DOL	1.15	BC	0.02	Vert(CT)	-0.00	12	n/r	120		
BCLL	0.0	Rep Stress Incr	YES	WB	0.02	Horz(CT)	0.00	12	n/a	n/a		
BCDL	10.0	Code IRC2018/TPI2014		Matrix-S							Weight: 49 lb	FT = 20%

LUMBER-
TOP CHORD 2x4 SPF No.2
BOT CHORD 2x4 SPF No.2
OTHERS 2x4 SPF No.2
SLIDER Left 2x4 SPF No.2 1-7-6, Right 2x4 SPF No.2 1-7-6

BRACING-
TOP CHORD Structural wood sheathing directly applied or 6-0-0 oc purlins.
BOT CHORD Rigid ceiling directly applied or 10-0-0 oc bracing.

REACTIONS. All bearings 12-0-0.
(lb) - Max Horz 2=51(LC 12)
Max Uplift All uplift 100 lb or less at joint(s) 2, 12, 18, 19, 20, 16, 15, 14
Max Grav All reactions 250 lb or less at joint(s) 2, 12, 17, 18, 19, 20, 16, 15, 14

FORCES. (lb) - Max. Comp./Max. Ten. - All forces 250 (lb) or less except when shown.

NOTES-
1) Unbalanced roof live loads have been considered for this design.
2) Wind: ASCE 7-16; Vult=115mph (3-second gust) Vasd=91mph; TCDL=6.0psf; BCDL=4.2psf; h=25ft; Cat. II; Exp C; Enclosed; MWFRS (envelope) gable end zone and C-C Corner(3E) -0-11-0 to 2-0-0, Exterior(2N) 2-0-0 to 6-0-0, Corner(3R) 6-0-0 to 9-0-0, Exterior(2N) 9-0-0 to 12-11-0 zone; cantilever left and right exposed ; end vertical left and right exposed;C-C for members and forces & MWFRS for reactions shown; Lumber DOL=1.60 plate grip DOL=1.60
3) Truss designed for wind loads in the plane of the truss only. For studs exposed to wind (normal to the face), see Standard Industry Gable End Details as applicable, or consult qualified building designer as per ANSI/TPI 1.
4) All plates are 2x4 MT20 unless otherwise indicated.
5) Gable requires continuous bottom chord bearing.
6) Gable studs spaced at 1-4-0 oc.
7) This truss has been designed for a 10.0 psf bottom chord live load nonconcurrent with any other live loads.
8) Provide mechanical connection (by others) of truss to bearing plate capable of withstanding 100 lb uplift at joint(s) 2, 12, 18, 19, 20, 16, 15, 14.
9) Beveled plate or shim required to provide full bearing surface with truss chord at joint(s) 2, 12.
10) This truss is designed in accordance with the 2018 International Residential Code sections R502.11.1 and R802.10.2 and referenced standard ANSI/TPI 1.

STATE OF MISSOURI
XUEGANG LIU
NUMBER E-29713
PROFESSIONAL ENGINEER
Xm. Liu
July 20,2021

MiTek
16023 Swingley Ridge Rd
Chesterfield, MO 63017

RELEASE FOR CONSTRUCTION
AS NOTED FOR PLAN REVIEW
DEVELOPMENT SERVICES
LEE'S SUMMIT, MISSOURI
10/22/2021

Job	Truss	Truss Type	Qty	Ply	Summit/59 Woodside I47079240
2935533	F2	Roof Special	3	1	Job Reference (optional)

Builders FirstSource (Valley Center), Valley Center, KS - 67147, 8.430 s Jun 2 2021 MiTek Industries, Inc. Tue Jul 20 09:06:05 2021 Page 1
ID:VPVqvFnP0P0b1j2tZrlOqezdKbx-xY9GSOgHRwe5whx1S38vF9nFkEt7yahCENFZ48ywUMm

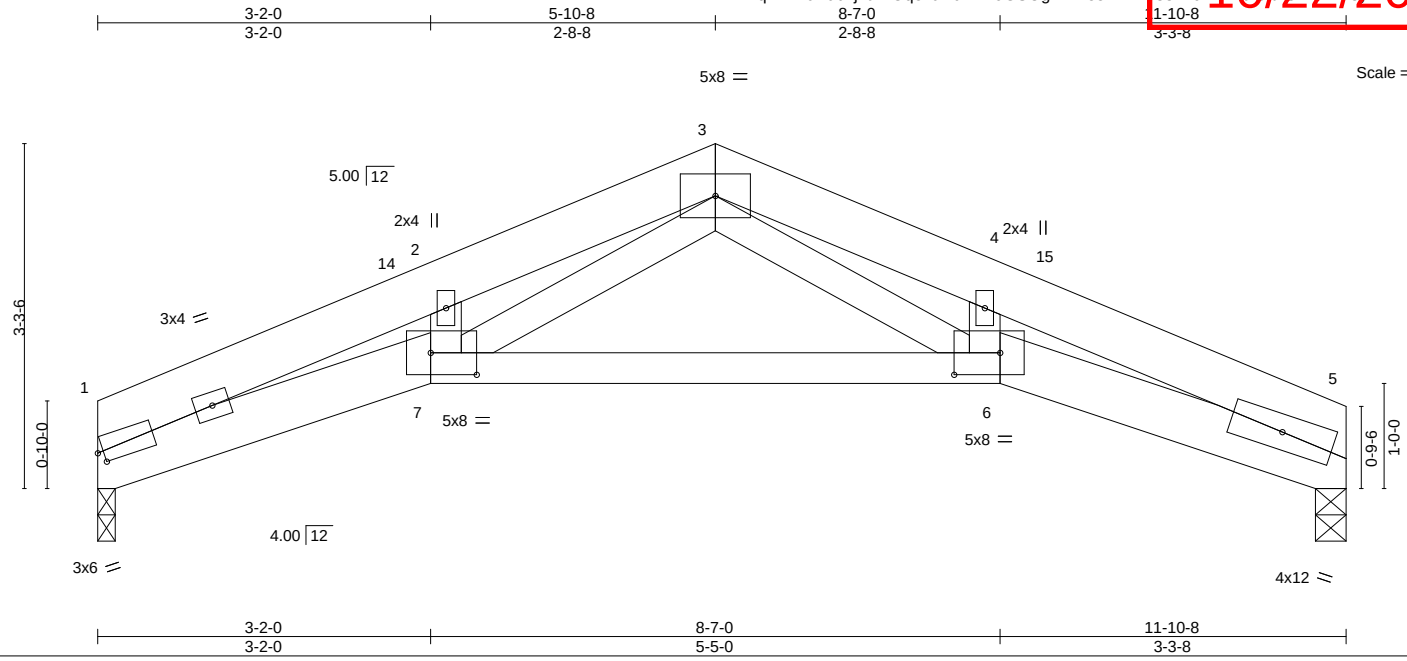

Plate Offsets (X,Y)-- [1:0-0-11,0-1-4], [6:0-5-4,0-2-8], [7:0-5-4,0-2-8]

LOADING (psf)		SPACING- 2-0-0		CSI.		DEFL. in (loc) l/defl L/d					PLATES	GRIP
TCLL	25.0	Plate Grip DOL	1.15	TC	0.20	Vert(LL)	-0.05	6-7	>999	240	MT20	197/144
TCDL	10.0	Lumber DOL	1.15	BC	0.32	Vert(CT)	-0.12	6-7	>999	180		
BCLL	0.0	Rep Stress Incr	YES	WB	0.15	Horz(CT)	0.05	5	n/a	n/a		
BCDL	10.0	Code IRC2018/TPI2014		Matrix-AS							Weight: 50 lb	FT = 20%

LUMBER-
TOP CHORD 2x6 SPF No.2
BOT CHORD 2x6 SPF No.2 *Except*
6-7: 2x4 SPF No.2
WEBS 2x4 SPF No.2

BRACING-
TOP CHORD Structural wood sheathing directly applied.
BOT CHORD Rigid ceiling directly applied.

REACTIONS. (size) 1=0-2-0, 5=0-3-8
Max Horz 1=-45(LC 13)
Max Uplift 1=-89(LC 12), 5=-90(LC 13)
Max Grav 1=534(LC 1), 5=534(LC 1)

FORCES. (lb) - Max. Comp./Max. Ten. - All forces 250 (lb) or less except when shown.
TOP CHORD 1-2=-1565/552, 2-3=-1426/589, 3-4=-1470/600, 4-5=-1604/560
BOT CHORD 1-7=-471/1421, 6-7=-275/883, 5-6=-470/1463
WEBS 3-7=-228/566, 3-6=-245/608

NOTES-
1) Unbalanced roof live loads have been considered for this design.
2) Wind: ASCE 7-16; Vult=115mph (3-second gust) Vasd=91mph; TCDL=6.0psf; BCDL=4.2psf; h=25ft; Cat. II; Exp C; Enclosed; MWFRS (envelope) gable end zone and C-C Exterior(2E) 0-0-0 to 3-0-0, Interior(1) 3-0-0 to 5-10-8, Exterior(2R) 5-10-8 to 8-10-8, Interior(1) 8-10-8 to 11-10-8 zone; cantilever left and right exposed ; end vertical left and right exposed;C-C for members and forces & MWFRS for reactions shown; Lumber DOL=1.60 plate grip DOL=1.60
3) This truss has been designed for a 10.0 psf bottom chord live load nonconcurrent with any other live loads.
4) Bearing at joint(s) 1, 5 considers parallel to grain value using ANSI/TPI 1 angle to grain formula. Building designer should verify capacity of bearing surface.
5) Provide mechanical connection (by others) of truss to bearing plate at joint(s) 1.
6) Provide mechanical connection (by others) of truss to bearing plate capable of withstanding 100 lb uplift at joint(s) 1, 5.
7) This truss is designed in accordance with the 2018 International Residential Code sections R502.11.1 and R802.10.2 and referenced standard ANSI/TPI 1.
8) This truss design requires that a minimum of 7/16" structural wood sheathing be applied directly to the top chord and 1/2" gypsum sheetrock be applied directly to the bottom chord.

STATE OF MISSOURI
XUEGANG LIU
NUMBER E-29713
PROFESSIONAL ENGINEER
Xuegang Liu
July 20,2021

MiTek
16023 Swingley Ridge Rd
Chesterfield, MO 63017

Job	Truss	Truss Type	Qty	Ply	Summit/59 Woodside	I47079241
2935533	F3	Roof Special	1	1	Job Reference (optional)	

Builders FirstSource (Valley Center), Valley Center, KS - 67147, 8.430 s Jun 2 2021 MiTek Industries, Inc. Tue Jul 20 09:06:07 2021 Page 1
ID:VPVqvFnP0P0b1j2tZrlOqezdKbx-txG1t4iXzXupA_5PaUANLasnE_Zadj_HUmk9OywDMk

-0-11-0	3-3-8	6-0-0	8-8-8	12-0-0	12-11-0
0-11-0	3-3-8	2-8-8	2-8-8	3-3-8	0-11-0

Scale = 1:22.9

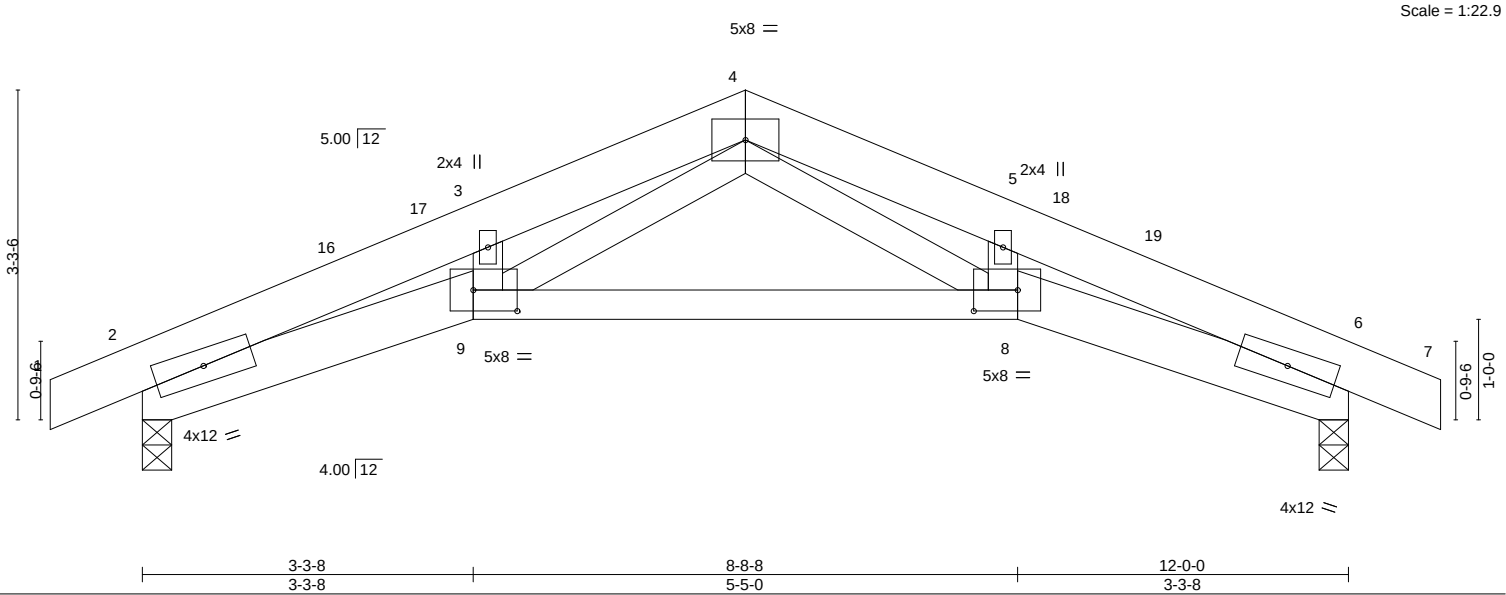

Plate Offsets (X,Y)-- [8:0-5-4,0-2-8], [9:0-5-4,0-2-8]

LOADING (psf)		SPACING- 2-0-0		CSI.		DEFL.	in	(loc)	l/defl	L/d	PLATES	GRIP
TCLL	25.0	Plate Grip DOL	1.15	TC	0.20	Vert(LL)	-0.05	8-9	>999	240	MT20	197/144
TCDL	10.0	Lumber DOL	1.15	BC	0.32	Vert(CT)	-0.12	8-9	>999	180		
BCLL	0.0	Rep Stress Incr	YES	WB	0.14	Horz(CT)	0.05	6	n/a	n/a		
BCDL	10.0	Code IRC2018/TPI2014		Matrix-AS							Weight: 54 lb	FT = 20%

LUMBER-
TOP CHORD 2x6 SPF No.2
BOT CHORD 2x6 SPF No.2 *Except*
8-9: 2x4 SPF No.2
WEBS 2x4 SPF No.2

BRACING-
TOP CHORD Structural wood sheathing directly applied.
BOT CHORD Rigid ceiling directly applied.

REACTIONS. (size) 2=0-3-8, 6=0-3-8
Max Horz 2=51(LC 12)
Max Uplift 2=-111(LC 12), 6=-111(LC 13)
Max Grav 2=604(LC 1), 6=604(LC 1)

FORCES. (lb) - Max. Comp./Max. Ten. - All forces 250 (lb) or less except when shown.
TOP CHORD 2-3=-1589/525, 3-4=-1453/568, 4-5=-1453/567, 5-6=-1589/523
BOT CHORD 2-9=-423/1447, 8-9=-229/886, 6-8=-420/1447
WEBS 4-8=-229/586, 4-9=-230/586

NOTES-
1) Unbalanced roof live loads have been considered for this design.
2) Wind: ASCE 7-16; Vult=115mph (3-second gust) Vasd=91mph; TCDL=6.0psf; BCDL=4.2psf; h=25ft; Cat. II; Exp C; Enclosed; MWFRS (envelope) gable end zone and C-C Exterior(2E) -0-11-0 to 2-1-0, Interior(1) 2-1-0 to 6-0-0, Exterior(2R) 6-0-0 to 9-0-0, Interior(1) 9-0-0 to 12-11-0 zone; cantilever left and right exposed ; end vertical left and right exposed;C-C for members and forces & MWFRS for reactions shown; Lumber DOL=1.60 plate grip DOL=1.60
3) This truss has been designed for a 10.0 psf bottom chord live load nonconcurrent with any other live loads.
4) Bearing at joint(s) 2, 6 considers parallel to grain value using ANSI/TPI 1 angle to grain formula. Building designer should verify capacity of bearing surface.
5) Provide mechanical connection (by others) of truss to bearing plate capable of withstanding 100 lb uplift at joint(s) except (jt=lb) 2=111, 6=111.
6) This truss is designed in accordance with the 2018 International Residential Code sections R502.11.1 and R802.10.2 and referenced standard ANSI/TPI 1.
7) This truss design requires that a minimum of 7/16" structural wood sheathing be applied directly to the top chord and 1/2" gypsum sheetrock be applied directly to the bottom chord.

STATE OF MISSOURI
XUEGANG LIU
NUMBER E-29713
PROFESSIONAL ENGINEER

July 20,2021

MiTek
16023 Swingley Ridge Rd
Chesterfield, MO 63017

Job	Truss	Truss Type	Qty	Ply	Summit/59 Woodside
2935533	GR1	Roof Special Girder	1	2	Job Reference (optional) I47079242

RELEASE FOR CONSTRUCTION
AS NOTED FOR PLAN REVIEW
DEVELOPMENT SERVICES
LEE'S SUMMIT, MISSOURI
10/22/2021

Builders FirstSource (Valley Center), Valley Center, KS - 67147, 8.430 s Jun 2 2021 MiTek Industries, Inc. Tue Jul 20 09:06:08 2021 Page 1
ID:VPVqvFnP0P0b1j2tZrlOqezdKbx-L7qP4Qi9kr0gn8ob7CictoFvfOrHMo8ewLTDhSyvDMi

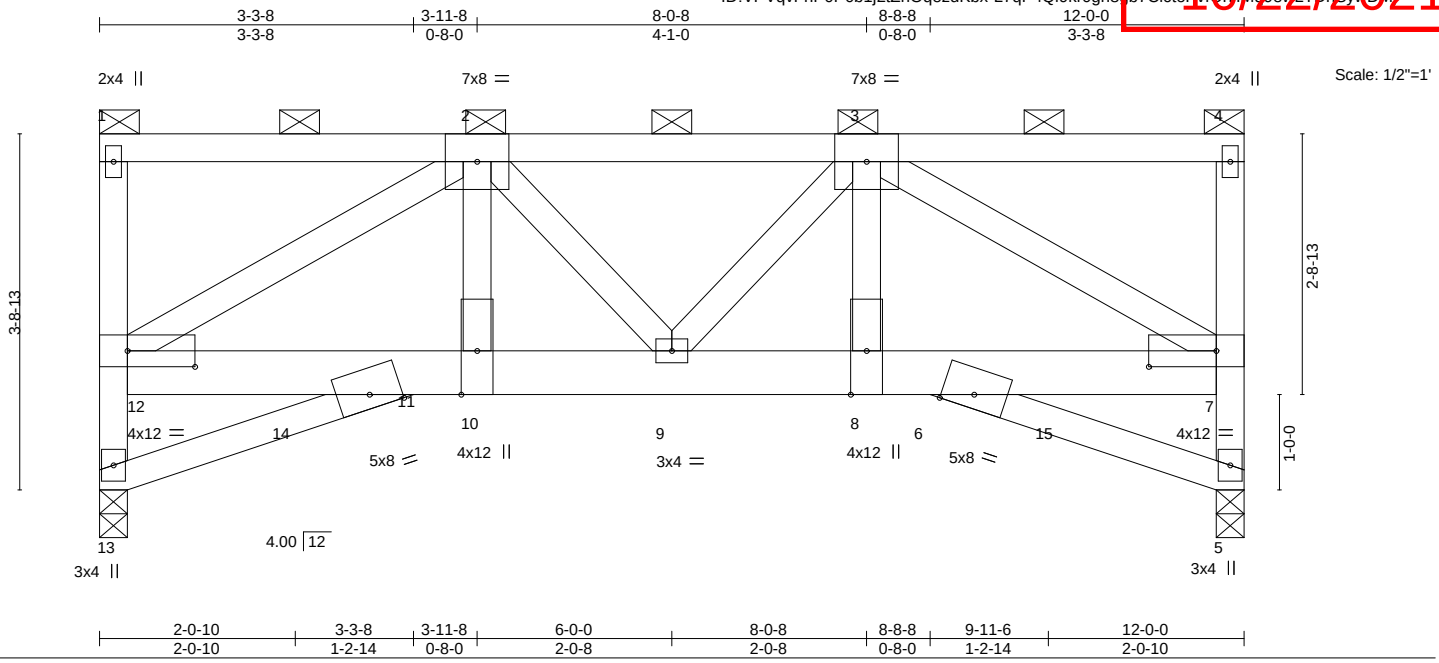

Plate Offsets (X,Y)-- [7:0-8-8,0-2-0], [12:0-8-8,0-2-0]

LOADING (psf)		SPACING-	2-0-0	CSI.		DEFL.	in	(loc)	l/defl	L/d	PLATES	GRIP
TCLL	25.0	Plate Grip DOL	1.15	TC	0.41	Vert(LL)	-0.01	10	>999	240	MT20	197/144
TCDL	10.0	Lumber DOL	1.15	BC	0.55	Vert(CT)	-0.10	9	>999	180		
BCLL	0.0	Rep Stress Incr	NO	WB	0.62	Horz(CT)	0.07	5	n/a	n/a		
BCDL	10.0	Code IRC2018/TPI2014		Matrix-AS							Weight: 143 lb	FT = 20%

LUMBER-
TOP CHORD 2x4 SPF No.2
BOT CHORD 2x4 SP 2400F 2.0E *Except*
7-12: 2x6 SPF 2100F 1.8E
WEBS 2x4 SPF No.2

BRACING-
TOP CHORD 2-0-0 oc purlins (4-10-5 max.): 1-4, except end verticals.
BOT CHORD Rigid ceiling directly applied.

REACTIONS. (size) 13=0-3-8, 5=0-3-8
Max Horz 13=-133(LC 8)
Max Grav 13=4320(LC 1), 5=4309(LC 1)

FORCES. (lb) - Max. Comp./Max. Ten. - All forces 250 (lb) or less except when shown.
TOP CHORD 12-13=-4304/0, 2-3=-6020/0, 5-7=-4292/0
BOT CHORD 11-13=0/546, 11-12=0/5143, 10-11=0/5486, 9-10=0/5486, 8-9=0/5497, 6-8=0/5497, 6-7=0/5157, 5-6=0/361
WEBS 2-10=0/2519, 2-9=0/856, 3-9=0/831, 3-8=0/2522, 2-12=-6240/0, 3-7=-6254/0

NOTES-
1) 2-ply truss to be connected together with 10d (0.131"x3") nails as follows:
Top chords connected as follows: 2x4 - 1 row at 0-7-0 oc.
Bottom chords connected as follows: 2x4 - 1 row at 0-9-0 oc, 2x6 - 2 rows staggered at 0-4-0 oc.
Webs connected as follows: 2x4 - 1 row at 0-9-0 oc.
2) All loads are considered equally applied to all plies, except if noted as front (F) or back (B) face in the LOAD CASE(S) section. Ply to ply connections have been provided to distribute only loads noted as (F) or (B), unless otherwise indicated.
3) Wind: ASCE 7-16; Vult=115mph (3-second gust) Vasd=91mph; TCDL=6.0psf; BCDL=4.2psf; h=25ft; Cat. II; Exp C; Enclosed; MWFRS (envelope) gable end zone and C-C Corner(3) zone; cantilever left and right exposed ; end vertical left and right exposed;C-C for members and forces & MWFRS for reactions shown; Lumber DOL=1.60 plate grip DOL=1.60
4) Provide adequate drainage to prevent water ponding.
5) This truss has been designed for a 10.0 psf bottom chord live load nonconcurrent with any other live loads.
6) Bearing at joint(s) 13, 5 considers parallel to grain value using ANSI/TPI 1 angle to grain formula. Building designer should verify capacity of bearing surface.
7) This truss is designed in accordance with the 2018 International Residential Code sections R502.11.1 and R802.10.2 and referenced standard ANSI/TPI 1.
8) Load case(s) 1, 2, 3, 4, 5, 6, 7, 8, 9, 10, 11, 12, 13, 14, 15, 16, 17, 18, 19, 20, 21, 22, 23, 24 has/have been modified. Building designer must review loads to verify that they are correct for the intended use of this truss.
9) This truss design requires that a minimum of 7/16" structural wood sheathing be applied directly to the top chord and 1/2" gypsum sheetrock be applied directly to the bottom chord.
10) Graphical purlin representation does not depict the size or the orientation of the purlin along the top and/or bottom chord.
11) Hanger(s) or other connection device(s) shall be provided sufficient to support concentrated load(s) . The design/selection of such connection device(s) is the responsibility of others.

STATE OF MISSOURI
XUEGANG LIU
NUMBER E-29713
PROFESSIONAL ENGINEER

LOAD CASE(S) Standard

July 20,2021

Continued on page 2

MiTek
16023 Swingley Ridge Rd
Chesterfield, MO 63017

LOAD CASE(S) Standard

1) Dead + Roof Live (balanced): Lumber Increase=1.15, Plate Increase=1.15
   Uniform Loads (plf)
   Vert: 1-4=-70, 11-13=-20, 6-11=-20, 5-6=-20
   Concentrated Loads (lb)
   Vert: 10=-1515(F) 9=-1515(F) 8=-1515(F) 14=-1515(F) 15=-1515(F)
2) Dead + 0.75 Roof Live (balanced): Lumber Increase=1.15, Plate Increase=1.15
   Uniform Loads (plf)
   Vert: 1-4=-58, 11-13=-20, 6-11=-20, 5-6=-20
   Concentrated Loads (lb)
   Vert: 10=-1515(F) 9=-1515(F) 8=-1515(F) 14=-1515(F) 15=-1515(F)
3) Dead + Uninhabitable Attic Without Storage: Lumber Increase=1.25, Plate Increase=1.25
   Uniform Loads (plf)
   Vert: 1-4=-20, 11-13=-40, 6-11=-40, 5-6=-40
   Concentrated Loads (lb)
   Vert: 10=-1515(F) 9=-1515(F) 8=-1515(F) 14=-1515(F) 15=-1515(F)
4) Dead + 0.6 C-C Wind (Pos. Internal) Case 1: Lumber Increase=1.60, Plate Increase=1.60
   Uniform Loads (plf)
   Vert: 1-4=75, 11-13=-8, 6-11=-8, 5-6=-8
   Horz: 1-13=23, 4-5=38
   Concentrated Loads (lb)
   Vert: 10=-1515(F) 9=-1515(F) 8=-1515(F) 14=-1515(F) 15=-1515(F)
5) Dead + 0.6 C-C Wind (Pos. Internal) Case 2: Lumber Increase=1.60, Plate Increase=1.60
   Uniform Loads (plf)
   Vert: 1-4=75, 11-13=-8, 6-11=-8, 5-6=-8
   Horz: 1-13=-38, 4-5=-23
   Concentrated Loads (lb)
   Vert: 10=-1515(F) 9=-1515(F) 8=-1515(F) 14=-1515(F) 15=-1515(F)
6) Dead + 0.6 C-C Wind (Neg. Internal) Case 1: Lumber Increase=1.60, Plate Increase=1.60
   Uniform Loads (plf)
   Vert: 1-4=-33, 11-13=-20, 6-11=-20, 5-6=-20
   Horz: 1-13=-26, 4-5=-35
   Concentrated Loads (lb)
   Vert: 10=-1515(F) 9=-1515(F) 8=-1515(F) 14=-1515(F) 15=-1515(F)
7) Dead + 0.6 C-C Wind (Neg. Internal) Case 2: Lumber Increase=1.60, Plate Increase=1.60
   Uniform Loads (plf)
   Vert: 1-4=-33, 11-13=-20, 6-11=-20, 5-6=-20
   Horz: 1-13=35, 4-5=26
   Concentrated Loads (lb)
   Vert: 10=-1515(F) 9=-1515(F) 8=-1515(F) 14=-1515(F) 15=-1515(F)
8) Dead + 0.6 MWFRS Wind (Pos. Internal) Left: Lumber Increase=1.60, Plate Increase=1.60
   Uniform Loads (plf)
   Vert: 1-4=29, 11-13=-8, 6-11=-8, 5-6=-8
   Horz: 1-13=17, 4-5=22
   Concentrated Loads (lb)
   Vert: 10=-1515(F) 9=-1515(F) 8=-1515(F) 14=-1515(F) 15=-1515(F)
9) Dead + 0.6 MWFRS Wind (Pos. Internal) Right: Lumber Increase=1.60, Plate Increase=1.60
   Uniform Loads (plf)
   Vert: 1-4=29, 11-13=-8, 6-11=-8, 5-6=-8
   Horz: 1-13=-22, 4-5=-17
   Concentrated Loads (lb)
   Vert: 10=-1515(F) 9=-1515(F) 8=-1515(F) 14=-1515(F) 15=-1515(F)
10) Dead + 0.6 MWFRS Wind (Neg. Internal) Left: Lumber Increase=1.60, Plate Increase=1.60
    Uniform Loads (plf)
    Vert: 1-4=9, 11-13=-20, 6-11=-20, 5-6=-20
    Horz: 1-13=28, 4-5=10
    Concentrated Loads (lb)
    Vert: 10=-1515(F) 9=-1515(F) 8=-1515(F) 14=-1515(F) 15=-1515(F)
11) Dead + 0.6 MWFRS Wind (Neg. Internal) Right: Lumber Increase=1.60, Plate Increase=1.60
    Uniform Loads (plf)
    Vert: 1-4=9, 11-13=-20, 6-11=-20, 5-6=-20
    Horz: 1-13=-10, 4-5=-28
    Concentrated Loads (lb)
    Vert: 10=-1515(F) 9=-1515(F) 8=-1515(F) 14=-1515(F) 15=-1515(F)
12) Dead + 0.6 MWFRS Wind (Pos. Internal) 1st Parallel: Lumber Increase=1.60, Plate Increase=1.60
    Uniform Loads (plf)
    Vert: 1-4=29, 11-13=-8, 6-11=-8, 5-6=-8
    Horz: 1-13=14, 4-5=20
    Concentrated Loads (lb)
    Vert: 10=-1515(F) 9=-1515(F) 8=-1515(F) 14=-1515(F) 15=-1515(F)
13) Dead + 0.6 MWFRS Wind (Pos. Internal) 2nd Parallel: Lumber Increase=1.60, Plate Increase=1.60
    Uniform Loads (plf)
    Vert: 1-4=29, 11-13=-8, 6-11=-8, 5-6=-8
    Horz: 1-13=-20, 4-5=-14
    Concentrated Loads (lb)
    Vert: 10=-1515(F) 9=-1515(F) 8=-1515(F) 14=-1515(F) 15=-1515(F)

Continued on page 3

LOAD CASE(S) Standard

14) Dead + 0.6 MWFRS Wind (Pos. Internal) 3rd Parallel: Lumber Increase=1.60, Plate Increase=1.60
Uniform Loads (plf)
Vert: 1-4=16, 11-13=-8, 6-11=-8, 5-6=-8
Horz: 1-13=7, 4-5=15
Concentrated Loads (lb)
Vert: 10=-1515(F) 9=-1515(F) 8=-1515(F) 14=-1515(F) 15=-1515(F)

15) Dead + 0.6 MWFRS Wind (Pos. Internal) 4th Parallel: Lumber Increase=1.60, Plate Increase=1.60
Uniform Loads (plf)
Vert: 1-4=16, 11-13=-8, 6-11=-8, 5-6=-8
Horz: 1-13=-15, 4-5=-7
Concentrated Loads (lb)
Vert: 10=-1515(F) 9=-1515(F) 8=-1515(F) 14=-1515(F) 15=-1515(F)

16) Dead + 0.6 MWFRS Wind (Neg. Internal) 1st Parallel: Lumber Increase=1.60, Plate Increase=1.60
Uniform Loads (plf)
Vert: 1-4=9, 11-13=-20, 6-11=-20, 5-6=-20
Horz: 1-13=26, 4-5=8
Concentrated Loads (lb)
Vert: 10=-1515(F) 9=-1515(F) 8=-1515(F) 14=-1515(F) 15=-1515(F)

17) Dead + 0.6 MWFRS Wind (Neg. Internal) 2nd Parallel: Lumber Increase=1.60, Plate Increase=1.60
Uniform Loads (plf)
Vert: 1-4=9, 11-13=-20, 6-11=-20, 5-6=-20
Horz: 1-13=-8, 4-5=-26
Concentrated Loads (lb)
Vert: 10=-1515(F) 9=-1515(F) 8=-1515(F) 14=-1515(F) 15=-1515(F)

18) Dead: Lumber Increase=0.90, Plate Increase=0.90 Plt. metal=0.90
Uniform Loads (plf)
Vert: 1-4=-20, 11-13=-20, 6-11=-20, 5-6=-20
Concentrated Loads (lb)
Vert: 10=-1515(F) 9=-1515(F) 8=-1515(F) 14=-1515(F) 15=-1515(F)

19) Dead + 0.75 Roof Live (bal.) + 0.75(0.6 MWFRS Wind (Neg. Int) Left): Lumber Increase=1.60, Plate Increase=1.60
Uniform Loads (plf)
Vert: 1-4=-36, 11-13=-20, 6-11=-20, 5-6=-20
Horz: 1-13=21, 4-5=7
Concentrated Loads (lb)
Vert: 10=-1515(F) 9=-1515(F) 8=-1515(F) 14=-1515(F) 15=-1515(F)

20) Dead + 0.75 Roof Live (bal.) + 0.75(0.6 MWFRS Wind (Neg. Int) Right): Lumber Increase=1.60, Plate Increase=1.60
Uniform Loads (plf)
Vert: 1-4=-36, 11-13=-20, 6-11=-20, 5-6=-20
Horz: 1-13=-7, 4-5=-21
Concentrated Loads (lb)
Vert: 10=-1515(F) 9=-1515(F) 8=-1515(F) 14=-1515(F) 15=-1515(F)

21) Dead + 0.75 Roof Live (bal.) + 0.75(0.6 MWFRS Wind (Neg. Int) 1st Parallel): Lumber Increase=1.60, Plate Increase=1.60
Uniform Loads (plf)
Vert: 1-4=-36, 11-13=-20, 6-11=-20, 5-6=-20
Horz: 1-13=19, 4-5=6
Concentrated Loads (lb)
Vert: 10=-1515(F) 9=-1515(F) 8=-1515(F) 14=-1515(F) 15=-1515(F)

22) Dead + 0.75 Roof Live (bal.) + 0.75(0.6 MWFRS Wind (Neg. Int) 2nd Parallel): Lumber Increase=1.60, Plate Increase=1.60
Uniform Loads (plf)
Vert: 1-4=-36, 11-13=-20, 6-11=-20, 5-6=-20
Horz: 1-13=-6, 4-5=-19
Concentrated Loads (lb)
Vert: 10=-1515(F) 9=-1515(F) 8=-1515(F) 14=-1515(F) 15=-1515(F)

23) Dead + 0.6 C-C Wind Min. Down: Lumber Increase=1.60, Plate Increase=1.60
Uniform Loads (plf)
Vert: 1-4=-28, 11-13=-8, 6-11=-8, 5-6=-8
Horz: 1-13=-16, 4-5=-16
Concentrated Loads (lb)
Vert: 10=-1515(F) 9=-1515(F) 8=-1515(F) 14=-1515(F) 15=-1515(F)

24) Dead + 0.6 C-C Wind Min. Upward: Lumber Increase=1.60, Plate Increase=1.60
Uniform Loads (plf)
Vert: 1-4=4, 11-13=-8, 6-11=-8, 5-6=-8
Horz: 1-13=16, 4-5=16
Concentrated Loads (lb)
Vert: 10=-1515(F) 9=-1515(F) 8=-1515(F) 14=-1515(F) 15=-1515(F)

RELEASE FOR CONSTRUCTION
AS NOTED FOR PLAN REVIEW
DEVELOPMENT SERVICES
LEE'S SUMMIT, MISSOURI
10/22/2021

Job	Truss	Truss Type	Qty	Ply	Summit/59 Woodside
2935533	J1	Jack-Open	5	1	I47079243 Job Reference (optional)

Builders FirstSource (Valley Center), Valley Center, KS - 67147, 8.430 s Jun 2 2021 MiTek Industries, Inc. Tue Jul 20 09:06:09 2021 Page 1
ID:VPVqvFnP0P0b1j2tZrlOqezdKbx-pKOnImjnV88XPIFcnvDrQ?xgcJlr5Q0n92DmDywDMi

-0-11-0 / 0-11-0 | 2-0-0 / 2-0-0

Scale = 1:12.3

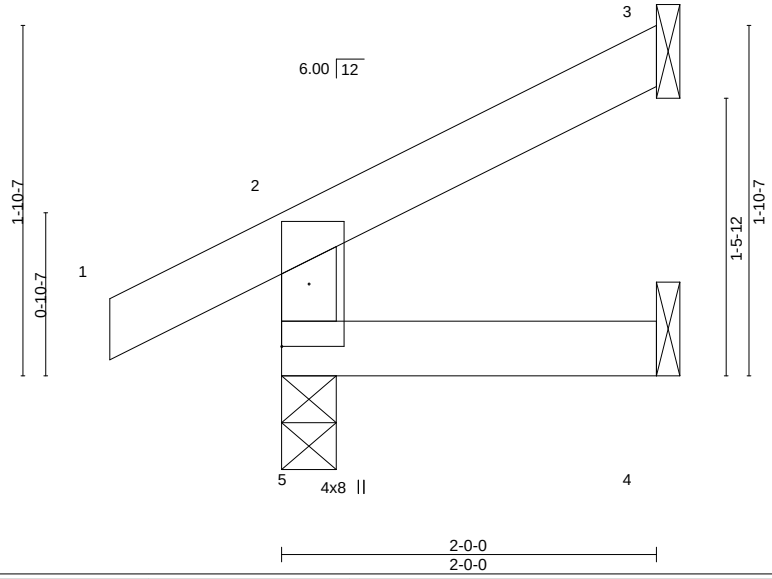

LOADING (psf)		SPACING-	2-0-0	CSI.		DEFL.	in	(loc)	l/defl	L/d	PLATES	GRIP
TCLL	25.0	Plate Grip DOL	1.15	TC	0.08	Vert(LL)	-0.00	5	>999	240	MT20	197/144
TCDL	10.0	Lumber DOL	1.15	BC	0.05	Vert(CT)	-0.00	4-5	>999	180		
BCLL	0.0	Rep Stress Incr	YES	WB	0.00	Horz(CT)	-0.00	3	n/a	n/a		
BCDL	10.0	Code IRC2018/TPI2014		Matrix-MR							Weight: 7 lb	FT = 20%

LUMBER-
TOP CHORD 2x4 SPF No.2
BOT CHORD 2x4 SPF No.2
WEBS 2x4 SPF No.2

BRACING-
TOP CHORD Structural wood sheathing directly applied or 2-0-0 oc purlins, except end verticals.
BOT CHORD Rigid ceiling directly applied or 10-0-0 oc bracing.

REACTIONS. (size) 5=0-3-8, 3=Mechanical, 4=Mechanical
Max Horz 5=47(LC 12)
Max Uplift 5=-26(LC 12), 3=-35(LC 12), 4=-2(LC 12)
Max Grav 5=179(LC 1), 3=46(LC 1), 4=33(LC 3)

FORCES. (lb) - Max. Comp./Max. Ten. - All forces 250 (lb) or less except when shown.

NOTES-
1) Wind: ASCE 7-16; Vult=115mph (3-second gust) Vasd=91mph; TCDL=6.0psf; BCDL=4.2psf; h=25ft; Cat. II; Exp C; Enclosed; MWFRS (envelope) gable end zone and C-C Exterior(2E) zone; cantilever left and right exposed ; end vertical left and right exposed;C-C for members and forces & MWFRS for reactions shown; Lumber DOL=1.60 plate grip DOL=1.60
2) This truss has been designed for a 10.0 psf bottom chord live load nonconcurrent with any other live loads.
3) Refer to girder(s) for truss to truss connections.
4) Provide mechanical connection (by others) of truss to bearing plate capable of withstanding 100 lb uplift at joint(s) 5, 3, 4.
5) This truss is designed in accordance with the 2018 International Residential Code sections R502.11.1 and R802.10.2 and referenced standard ANSI/TPI 1.

STATE OF MISSOURI
XUEGANG LIU
NUMBER E-29713
PROFESSIONAL ENGINEER

July 20,2021

MiTek
16023 Swingley Ridge Rd
Chesterfield, MO 63017

RELEASE FOR CONSTRUCTION
AS NOTED FOR PLAN REVIEW
DEVELOPMENT SERVICES
LEE'S SUMMIT, MISSOURI
10/22/2021

Job	Truss	Truss Type	Qty	Ply	Summit/59 Woodside I47079244
2935533	LG1	GABLE	1	1	Job Reference (optional)

Builders FirstSource (Valley Center), Valley Center, KS - 67147, 8.430 s Jun 2 2021 MiTek Industries, Inc. Tue Jul 20 09:06:10 2021 Page 1
ID:VPVqvFnP0P0b1j2tZrlOqezdKbx-HWy9V6kQGSGO1Sc_Fdk4yDULfCzqtpnxOfyJmLywDMh

3-10-4 7-8-9
3-10-4 3-10-4

4x6 =

Scale = 1:29.5

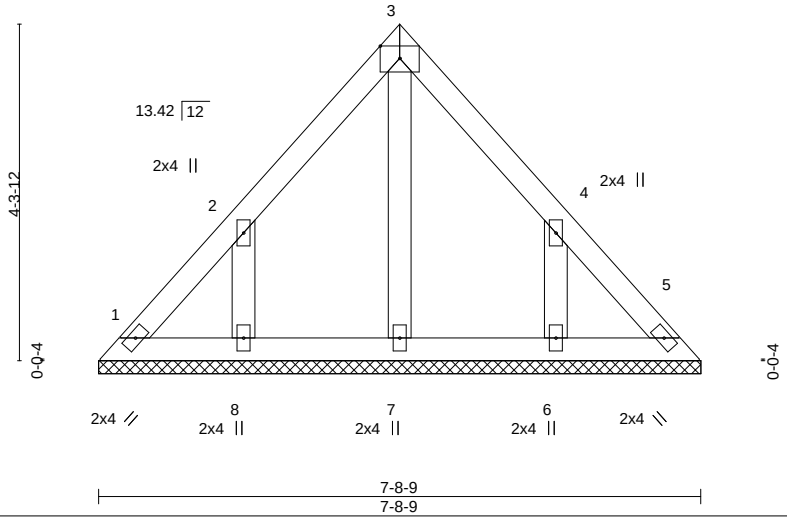

Plate Offsets (X,Y)-- [3:Edge,0-1-14]

LOADING (psf)		SPACING-	2-0-0	CSI.		DEFL.	in	(loc)	l/defl	L/d	PLATES	GRIP
TCLL	25.0	Plate Grip DOL	1.15	TC	0.06	Vert(LL)	n/a	-	n/a	999	MT20	197/144
TCDL	10.0	Lumber DOL	1.15	BC	0.02	Vert(CT)	n/a	-	n/a	999		
BCLL	0.0	Rep Stress Incr	YES	WB	0.03	Horz(CT)	0.00	5	n/a	n/a		
BCDL	10.0	Code IRC2018/TPI2014		Matrix-P							Weight: 29 lb	FT = 20%

LUMBER-
TOP CHORD 2x4 SPF No.2
BOT CHORD 2x4 SPF No.2
OTHERS 2x4 SPF No.2

BRACING-
TOP CHORD Structural wood sheathing directly applied or 6-0-0 oc purlins.
BOT CHORD Rigid ceiling directly applied or 10-0-0 oc bracing.

REACTIONS. All bearings 7-8-9.
(lb) - Max Horz 1=-106(LC 8)
Max Uplift All uplift 100 lb or less at joint(s) 1, 5 except 8=-159(LC 12), 6=-159(LC 13)
Max Grav All reactions 250 lb or less at joint(s) 1, 5, 7, 8, 6

FORCES. (lb) - Max. Comp./Max. Ten. - All forces 250 (lb) or less except when shown.

NOTES-
1) Unbalanced roof live loads have been considered for this design.
2) Wind: ASCE 7-16; Vult=115mph (3-second gust) Vasd=91mph; TCDL=6.0psf; BCDL=4.2psf; h=25ft; Cat. II; Exp C; Enclosed; MWFRS (envelope) gable end zone and C-C Exterior(2E) 0-3-15 to 3-3-15, Interior(1) 3-3-15 to 3-10-4, Exterior(2R) 3-10-4 to 6-10-4 , Interior(1) 6-10-4 to 7-4-10 zone; cantilever left and right exposed ; end vertical left and right exposed;C-C for members and forces & MWFRS for reactions shown; Lumber DOL=1.60 plate grip DOL=1.60
3) Gable requires continuous bottom chord bearing.
4) This truss has been designed for a 10.0 psf bottom chord live load nonconcurrent with any other live loads.
5) Provide mechanical connection (by others) of truss to bearing plate capable of withstanding 100 lb uplift at joint(s) 1, 5 except (jt=lb) 8=159, 6=159.
6) This truss is designed in accordance with the 2018 International Residential Code sections R502.11.1 and R802.10.2 and referenced standard ANSI/TPI 1.

STATE OF MISSOURI
XUEGANG LIU
NUMBER E-29713
PROFESSIONAL ENGINEER

July 20,2021

MiTek
16023 Swingley Ridge Rd
Chesterfield, MO 63017

RELEASE FOR CONSTRUCTION
AS NOTED FOR PLAN REVIEW
DEVELOPMENT SERVICES
LEE'S SUMMIT, MISSOURI
10/22/2021

Job	Truss	Truss Type	Qty	Ply	Summit/59 Woodside	I47079245
2935533	M1	Monopitch Supported Gable	1	1	Job Reference (optional)	

Builders FirstSource (Valley Center), Valley Center, KS - 67147, 8.430 s Jun 2 2021 MiTek Industries, Inc. Tue Jul 20 09:06:11 2021 Page 1
ID:VPVqvFnP0P0b1j2tZrlOqezdKbx-liWXiSl20mOFecOApKFJVQ1UDd_RZKwrdJtlnywDMg

-0-11-0 9-11-8
0-11-0 9-11-8

Scale = 1:27.0

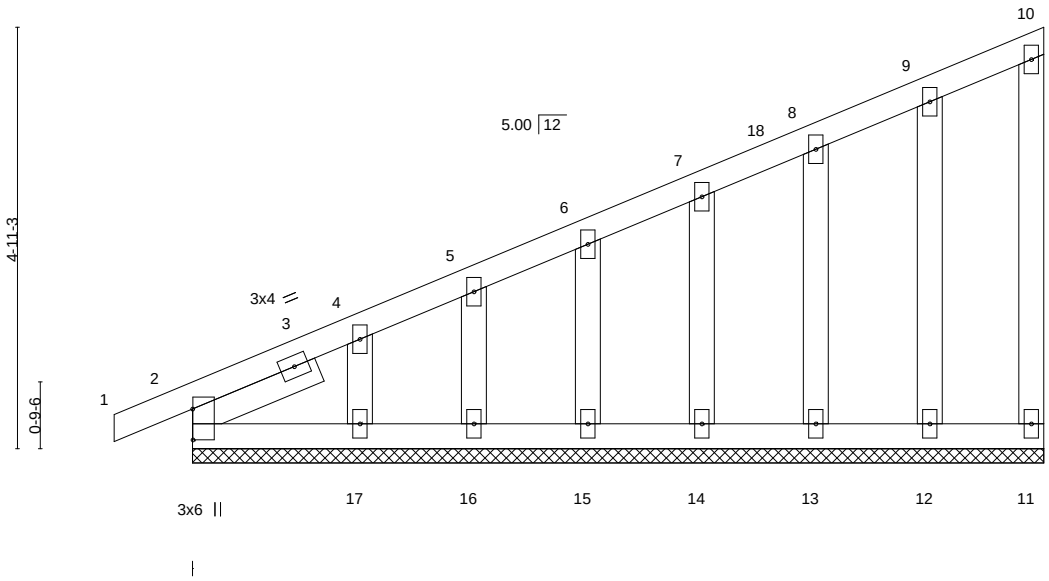

Plate Offsets (X,Y)-- [2:0-4-5,0-0-1]

LOADING (psf)		SPACING-	2-0-0	CSI.		DEFL.	in	(loc)	l/defl	L/d	PLATES	GRIP
TCLL	25.0	Plate Grip DOL	1.15	TC	0.14	Vert(LL)	-0.00	1	n/r	120	MT20	197/144
TCDL	10.0	Lumber DOL	1.15	BC	0.07	Vert(CT)	-0.00	1	n/r	120		
BCLL	0.0	Rep Stress Incr	YES	WB	0.04	Horz(CT)	0.00	11	n/a	n/a		
BCDL	10.0	Code IRC2018/TPI2014		Matrix-S							Weight: 48 lb	FT = 20%

LUMBER-
TOP CHORD 2x4 SPF No.2
BOT CHORD 2x4 SPF No.2
WEBS 2x4 SPF No.2
OTHERS 2x4 SPF No.2
SLIDER Left 2x4 SPF No.2 1-7-6

BRACING-
TOP CHORD Structural wood sheathing directly applied or 6-0-0 oc purlins, except end verticals.
BOT CHORD Rigid ceiling directly applied or 10-0-0 oc bracing.

REACTIONS. All bearings 9-11-8.
(lb) - Max Horz 2=197(LC 9)
Max Uplift All uplift 100 lb or less at joint(s) 11, 12, 13, 14, 15, 16, 17
Max Grav All reactions 250 lb or less at joint(s) 11, 2, 12, 13, 14, 15, 16, 17

FORCES. (lb) - Max. Comp./Max. Ten. - All forces 250 (lb) or less except when shown.
TOP CHORD 2-4=-395/196, 4-5=-285/156, 5-6=-251/147

NOTES-
1) Wind: ASCE 7-16; Vult=115mph (3-second gust) Vasd=91mph; TCDL=6.0psf; BCDL=4.2psf; h=25ft; Cat. II; Exp C; Enclosed; MWFRS (envelope) gable end zone and C-C Corner(3E) -0-11-0 to 1-11-8, Exterior(2N) 1-11-8 to 9-9-12 zone; cantilever left and right exposed ; end vertical left and right exposed;C-C for members and forces & MWFRS for reactions shown; Lumber DOL=1.60 plate grip DOL=1.60
2) Truss designed for wind loads in the plane of the truss only. For studs exposed to wind (normal to the face), see Standard Industry Gable End Details as applicable, or consult qualified building designer as per ANSI/TPI 1.
3) All plates are 2x4 MT20 unless otherwise indicated.
4) Gable requires continuous bottom chord bearing.
5) Gable studs spaced at 1-4-0 oc.
6) This truss has been designed for a 10.0 psf bottom chord live load nonconcurrent with any other live loads.
7) Provide mechanical connection (by others) of truss to bearing plate capable of withstanding 100 lb uplift at joint(s) 11, 12, 13, 14, 15, 16, 17.
8) Beveled plate or shim required to provide full bearing surface with truss chord at joint(s) 2.
9) This truss is designed in accordance with the 2018 International Residential Code sections R502.11.1 and R802.10.2 and referenced standard ANSI/TPI 1.

STATE OF MISSOURI
XUEGANG LIU
NUMBER E-29713
PROFESSIONAL ENGINEER

July 20,2021

MiTek
16023 Swingley Ridge Rd
Chesterfield, MO 63017

RELEASE FOR CONSTRUCTION
AS NOTED FOR PLAN REVIEW
DEVELOPMENT SERVICES
LEE'S SUMMIT, MISSOURI
10/22/2021

Job	Truss	Truss Type	Qty	Ply	Summit/59 Woodside I47079246
2935533	M2	Common	4	1	Job Reference (optional)

Builders FirstSource (Valley Center), Valley Center, KS - 67147, 8.430 s Jun 2 2021 MiTek Industries, Inc. Tue Jul 20 09:06:13 2021 Page 1
ID:VPVqvFnP0P0b1j2tZrlOqezdKbx-i5dI77mIYNfzuvYZwlHnar6iGPUOJ3B2N4pB_MgywDMe

-0-11-0	7-9-12	15-4-0	22-10-4	30-8-0	31-7-0
0-11-0	7-9-12	7-6-4	7-6-4	7-9-12	0-11-0

Scale = 1:52.1

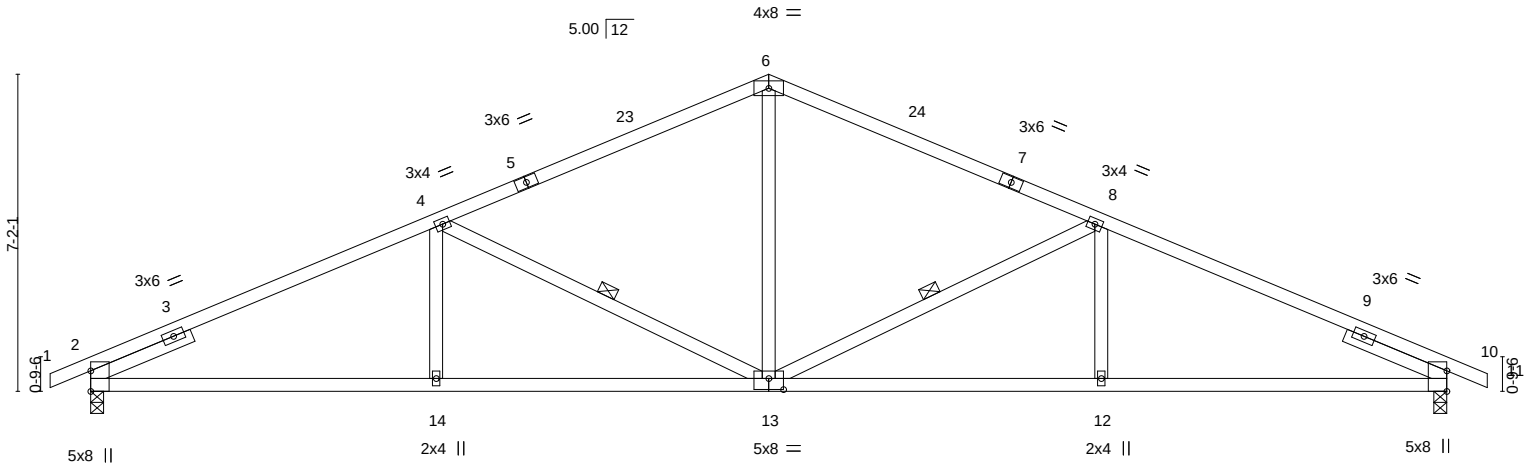

7-9-12	15-4-0	22-10-4	30-8-0
7-9-12	7-6-4	7-6-4	7-9-12

Plate Offsets (X,Y)-- [13:0-4-0,0-3-0]

LOADING (psf)		SPACING-	2-0-0	CSI.		DEFL.	in	(loc)	l/defl	L/d	PLATES	GRIP
TCLL	25.0	Plate Grip DOL	1.15	TC	0.68	Vert(LL)	-0.18	12-13	>999	240	MT20	197/144
TCDL	10.0	Lumber DOL	1.15	BC	0.87	Vert(CT)	-0.36	12-13	>999	180		
BCLL	0.0	Rep Stress Incr	YES	WB	0.25	Horz(CT)	0.12	10	n/a	n/a		
BCDL	10.0	Code IRC2018/TPI2014		Matrix-AS							Weight: 115 lb	FT = 20%

LUMBER-
TOP CHORD 2x4 SPF No.2
BOT CHORD 2x4 SPF No.2
WEBS 2x4 SPF No.2
SLIDER Left 2x4 SPF No.2 2-6-0, Right 2x4 SPF No.2 2-6-0

BRACING-
TOP CHORD Structural wood sheathing directly applied.
BOT CHORD Rigid ceiling directly applied.
WEBS 1 Row at midpt 8-13, 4-13

REACTIONS. (size) 2=0-3-8, 10=0-3-8
Max Horz 2=-119(LC 17)
Max Uplift 2=-253(LC 12), 10=-253(LC 13)
Max Grav 2=1444(LC 1), 10=1444(LC 1)

FORCES. (lb) - Max. Comp./Max. Ten. - All forces 250 (lb) or less except when shown.
TOP CHORD 2-4=-2471/415, 4-6=-1826/358, 6-8=-1826/358, 8-10=-2471/416
BOT CHORD 2-14=-405/2208, 13-14=-405/2208, 12-13=-286/2208, 10-12=-286/2208
WEBS 6-13=-80/789, 8-13=-756/275, 8-12=0/271, 4-13=-756/274, 4-14=0/271

NOTES-
1) Unbalanced roof live loads have been considered for this design.
2) Wind: ASCE 7-16; Vult=115mph (3-second gust) Vasd=91mph; TCDL=6.0psf; BCDL=4.2psf; h=25ft; Cat. II; Exp C; Enclosed; MWFRS (envelope) gable end zone and C-C Exterior(2E) -0-11-0 to 2-1-0, Interior(1) 2-1-0 to 15-4-0, Exterior(2R) 15-4-0 to 18-4-0, Interior(1) 18-4-0 to 31-7-0 zone; cantilever left and right exposed ; end vertical left and right exposed;C-C for members and forces & MWFRS for reactions shown; Lumber DOL=1.60 plate grip DOL=1.60
3) This truss has been designed for a 10.0 psf bottom chord live load nonconcurrent with any other live loads.
4) Provide mechanical connection (by others) of truss to bearing plate capable of withstanding 100 lb uplift at joint(s) except (jt=lb) 2=253, 10=253.
5) This truss is designed in accordance with the 2018 International Residential Code sections R502.11.1 and R802.10.2 and referenced standard ANSI/TPI 1.
6) This truss design requires that a minimum of 7/16" structural wood sheathing be applied directly to the top chord and 1/2" gypsum sheetrock be applied directly to the bottom chord.

STATE OF MISSOURI
XUEGANG LIU
NUMBER E-29713
PROFESSIONAL ENGINEER
July 20,2021

MiTek
16023 Swingley Ridge Rd
Chesterfield, MO 63017

Job	Truss	Truss Type	Qty	Ply	Summit/59 Woodside
2935533	M4	GABLE	1	1	Job Reference (optional)

RELEASE FOR CONSTRUCTION
AS NOTED FOR PLAN REVIEW
DEVELOPMENT SERVICES
LEE'S SUMMIT, MISSOURI
10/22/2021

Builders FirstSource (Valley Center), Valley Center, KS - 67147, 8.430 s Jun 2 2021 MiTek Industries, Inc. Tue Jul 20 09:06:15 2021 Page 1
ID:VPVqvFnP0P0b1j2tZrlOqezdKbx-eTl2YpoY4_vh7Diy2AKGfGB16DFyV1agXxg4RzywDMc

-0-11-0 7-9-12 15-4-0 22-10-4 30-8-0 31-7-0
0-11-0 7-9-12 7-6-4 7-6-4 7-9-12 0-11-0

Scale = 1:52.9

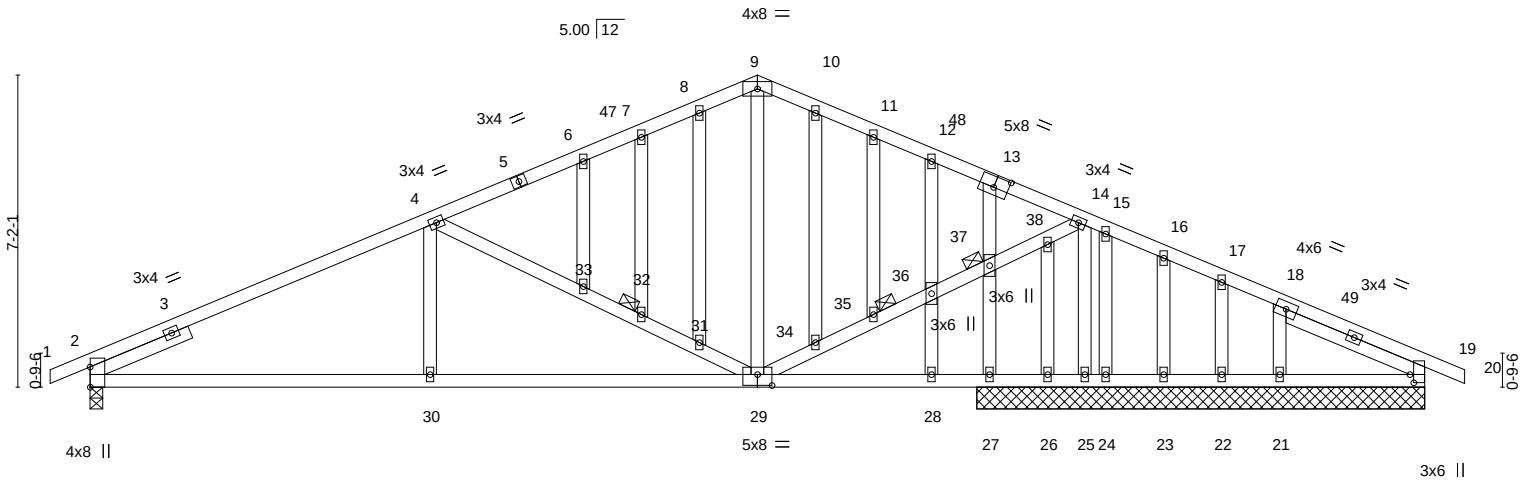

7-9-12 15-4-0 22-10-4 30-8-0
7-9-12 7-6-4 7-6-4 7-9-12

Plate Offsets (X,Y)-- [2:0-5-9,Edge], [13:0-4-0,0-3-0], [19:0-2-4,0-1-1], [29:0-4-0,0-3-0]

LOADING (psf)		SPACING-	2-0-0	CSI.		DEFL.	in	(loc)	l/defl	L/d	PLATES	GRIP
TCLL	25.0	Plate Grip DOL	1.15	TC	0.46	Vert(LL)	-0.07	29-30	>999	240	MT20	197/144
TCDL	10.0	Lumber DOL	1.15	BC	0.48	Vert(CT)	-0.17	29-30	>999	180		
BCLL	0.0	Rep Stress Incr	YES	WB	0.51	Horz(CT)	0.03	27	n/a	n/a		
BCDL	10.0	Code IRC2018/TPI2014		Matrix-AS							Weight: 166 lb	FT = 20%

LUMBER-

TOP CHORD	2x4 SPF No.2
BOT CHORD	2x4 SPF No.2
WEBS	2x4 SPF No.2
OTHERS	2x4 SPF No.2
SLIDER	Left 2x4 SPF No.2 2-6-0, Right 2x4 SPF No.2 3-6-4

BRACING-

TOP CHORD	Structural wood sheathing directly applied.
BOT CHORD	Rigid ceiling directly applied.
JOINTS	1 Brace at Jt(s): 32, 35, 37

REACTIONS. All bearings 10-3-8 except (jt=length) 2=0-3-8.
(lb) - Max Horz 2=119(LC 12)
Max Uplift All uplift 100 lb or less at joint(s) 25, 19, 24, 23, 22, 21 except 2=-212(LC 12), 27=-163(LC 13), 26=-184(LC 26)
Max Grav All reactions 250 lb or less at joint(s) 19, 26, 23, 22, 19 except 2=1013(LC 1), 25=727(LC 1), 27=535(LC 26), 24=253(LC 1), 21=327(LC 1)

FORCES. (lb) - Max. Comp./Max. Ten. - All forces 250 (lb) or less except when shown.
TOP CHORD 2-4=-1449/319, 4-6=-756/189, 6-7=-666/195, 7-8=-664/215, 8-9=-615/213, 9-10=-616/220, 10-11=-680/225, 11-12=-695/209, 12-13=-703/196, 13-14=-683/179, 15-16=0/286, 16-17=0/278, 17-18=0/260
BOT CHORD 2-30=-317/1337, 29-30=-317/1337
WEBS 29-34=-131/967, 34-35=-114/931, 35-36=-122/959, 36-37=-123/965, 37-38=-125/949, 14-38=-125/969, 14-25=-645/95, 4-33=-811/272, 32-33=-819/272, 31-32=-857/293, 29-31=-846/286, 4-30=0/306, 27-37=-300/108, 15-24=-262/37

NOTES-
1) Unbalanced roof live loads have been considered for this design.
2) Wind: ASCE 7-16; Vult=115mph (3-second gust) Vasd=91mph; TCDL=6.0psf; BCDL=4.2psf; h=25ft; Cat. II; Exp C; Enclosed; MWFRS (envelope) gable end zone and C-C Exterior(2E) -0-11-0 to 2-1-0, Interior(1) 2-1-0 to 15-4-0, Exterior(2R) 15-4-0 to 18-4-0, Interior(1) 18-4-0 to 31-7-0 zone; cantilever left and right exposed ; end vertical left and right exposed;C-C for members and forces & MWFRS for reactions shown; Lumber DOL=1.60 plate grip DOL=1.60
3) Truss designed for wind loads in the plane of the truss only. For studs exposed to wind (normal to the face), see Standard Industry Gable End Details as applicable, or consult qualified building designer as per ANSI/TPI 1.
4) All plates are 2x4 MT20 unless otherwise indicated.
5) Gable studs spaced at 1-4-0 oc.
6) This truss has been designed for a 10.0 psf bottom chord live load nonconcurrent with any other live loads.
7) Provide mechanical connection (by others) of truss to bearing plate capable of withstanding 100 lb uplift at joint(s) 25, 19, 24, 23, 22, 21, 19 except (jt=lb) 2=212, 27=163, 26=184.
8) This truss is designed in accordance with the 2018 International Residential Code sections R502.11.1 and R802.10.2 and referenced standard ANSI/TPI 1.
9) This truss design requires that a minimum of 7/16" structural wood sheathing be applied directly to the top chord and 1/2" gypsum sheetrock be applied directly to the bottom chord.

STATE OF MISSOURI
XUEGANG LIU
NUMBER E-29713
PROFESSIONAL ENGINEER
July 20,2021

MiTek
16023 Swingley Ridge Rd
Chesterfield, MO 63017

Job	Truss	Truss Type	Qty	Ply	Summit/59 Woodside
2935533	M5	Common Supported Gable	1	1	Job Reference (optional)

RELEASE FOR CONSTRUCTION
AS NOTED FOR PLAN REVIEW
DEVELOPMENT SERVICES
LEE'S SUMMIT, MISSOURI
10/22/2021

Builders FirstSource (Valley Center), Valley Center, KS - 67147, 8.430 s Jun 2 2021 MiTek Industries, Inc. Tue Jul 20 09:06:17 2021 Page 1
ID:VPVqvFnP0P0b1j2tZrlOqezdKbx-astpzVppcc9OMXsK9bMklhGX202W?2T2?F9BVPywOMa

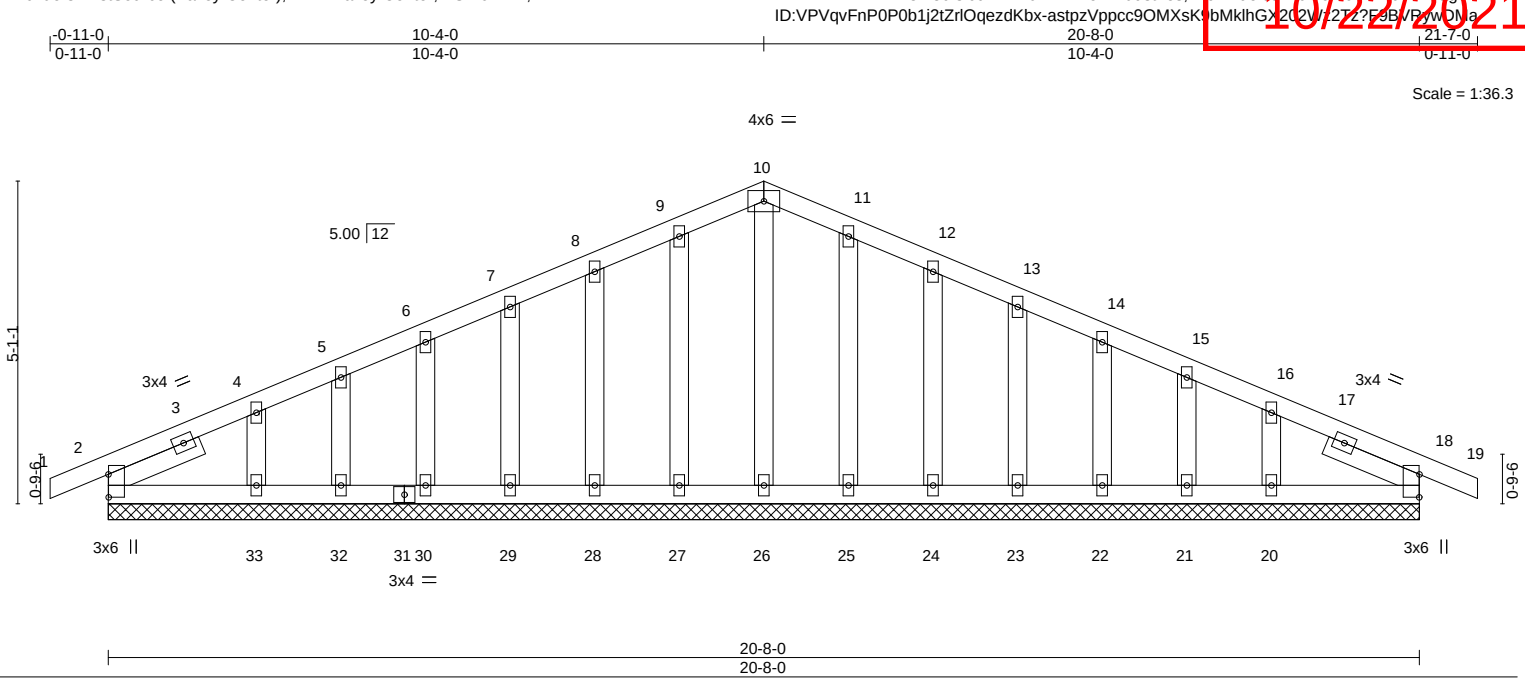

Plate Offsets (X,Y)-- [2:0-4-5,0-0-1], [18:0-4-5,0-0-1]

LOADING (psf)		SPACING-	2-0-0	CSI.		DEFL.	in	(loc)	l/defl	L/d	PLATES	GRIP
TCLL	25.0	Plate Grip DOL	1.15	TC	0.05	Vert(LL)	-0.00	18	n/r	120	MT20	197/144
TCDL	10.0	Lumber DOL	1.15	BC	0.03	Vert(CT)	-0.00	18	n/r	120		
BCLL	0.0	Rep Stress Incr	YES	WB	0.03	Horz(CT)	0.00	18	n/a	n/a		
BCDL	10.0	Code IRC2018/TPI2014		Matrix-S							Weight: 96 lb	FT = 20%

LUMBER-
TOP CHORD 2x4 SPF No.2
BOT CHORD 2x4 SPF No.2
OTHERS 2x4 SPF No.2
SLIDER Left 2x4 SPF No.2 1-7-4, Right 2x4 SPF No.2 1-7-4

BRACING-
TOP CHORD Structural wood sheathing directly applied or 6-0-0 oc purlins.
BOT CHORD Rigid ceiling directly applied or 10-0-0 oc bracing.

REACTIONS. All bearings 20-8-0.
(lb) - Max Horz 2=83(LC 16)
Max Uplift All uplift 100 lb or less at joint(s) 2, 27, 28, 29, 30, 32, 33, 25, 24, 23, 22, 21, 20, 18
Max Grav All reactions 250 lb or less at joint(s) 2, 26, 27, 28, 29, 30, 32, 33, 25, 24, 23, 22, 21, 20, 18

FORCES. (lb) - Max. Comp./Max. Ten. - All forces 250 (lb) or less except when shown.

NOTES-
1) Unbalanced roof live loads have been considered for this design.
2) Wind: ASCE 7-16; Vult=115mph (3-second gust) Vasd=91mph; TCDL=6.0psf; BCDL=4.2psf; h=25ft; Cat. II; Exp C; Enclosed; MWFRS (envelope) gable end zone and C-C Corner(3E) -0-11-0 to 2-4-0, Exterior(2N) 2-4-0 to 10-4-0, Corner(3R) 10-4-0 to 13-4-0, Exterior(2N) 13-4-0 to 21-7-0 zone; cantilever left and right exposed ; end vertical left and right exposed;C-C for members and forces & MWFRS for reactions shown; Lumber DOL=1.60 plate grip DOL=1.60
3) Truss designed for wind loads in the plane of the truss only. For studs exposed to wind (normal to the face), see Standard Industry Gable End Details as applicable, or consult qualified building designer as per ANSI/TPI 1.
4) All plates are 2x4 MT20 unless otherwise indicated.
5) Gable requires continuous bottom chord bearing.
6) Gable studs spaced at 1-4-0 oc.
7) This truss has been designed for a 10.0 psf bottom chord live load nonconcurrent with any other live loads.
8) Provide mechanical connection (by others) of truss to bearing plate capable of withstanding 100 lb uplift at joint(s) 2, 27, 28, 29, 30, 32, 33, 25, 24, 23, 22, 21, 20, 18.
9) This truss is designed in accordance with the 2018 International Residential Code sections R502.11.1 and R802.10.2 and referenced standard ANSI/TPI 1.

STATE OF MISSOURI
XUEGANG LIU
NUMBER E-29713
PROFESSIONAL ENGINEER
July 20,2021

MiTek
16023 Swingley Ridge Rd
Chesterfield, MO 63017

RELEASE FOR CONSTRUCTION
AS NOTED FOR PLAN REVIEW
DEVELOPMENT SERVICES
LEE'S SUMMIT, MISSOURI
10/22/2021

Job	Truss	Truss Type	Qty	Ply	Summit/59 Woodside I47079249
2935533	M6	Common	6	1	Job Reference (optional)

Builders FirstSource (Valley Center), Valley Center, KS - 67147, 8.430 s Jun 2 2021 MiTek Industries, Inc. Tue Jul 20 09:06:19 2021 Page 1
ID:VPVqvFnP0P0b1j2tZrlOqezdKbx-WF?ZOBr38DP6cq0jH0OCq6MhqXpFvVGSYelakywDMY

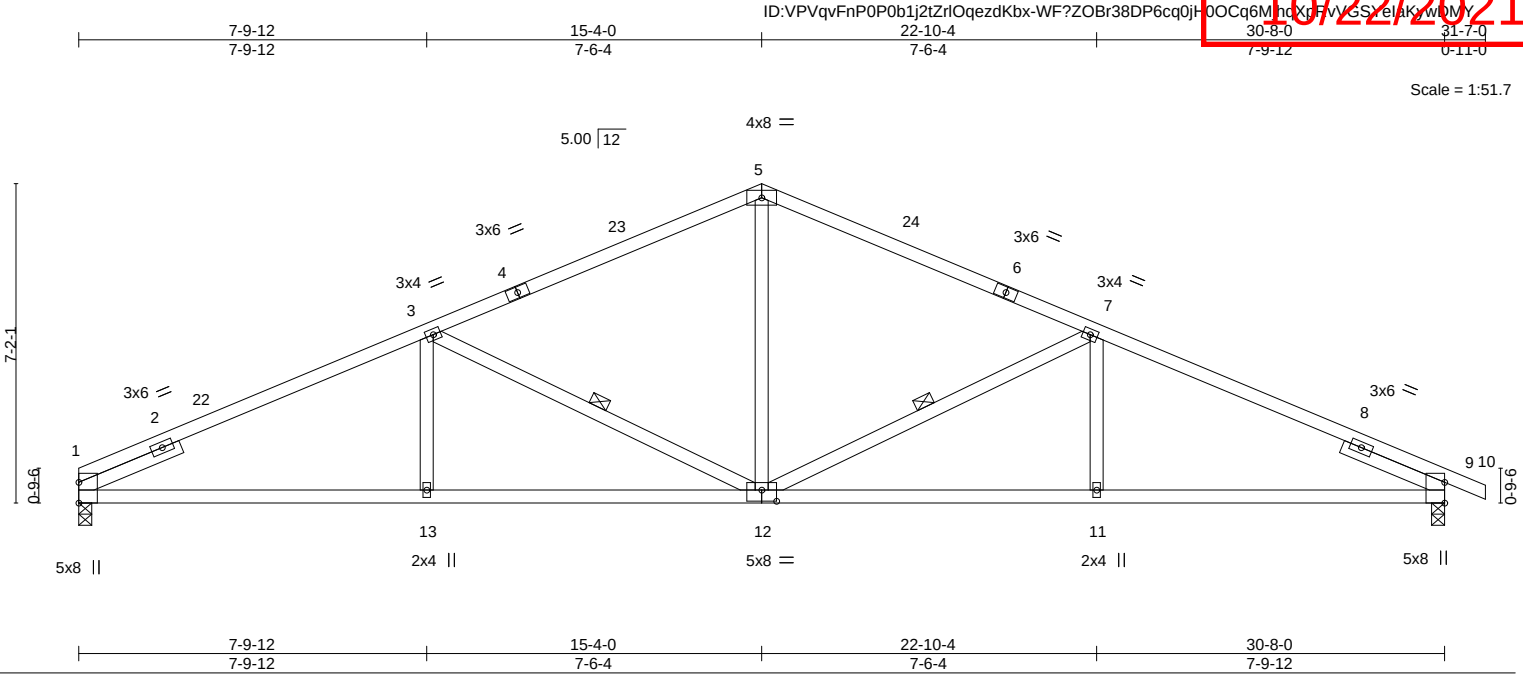

Plate Offsets (X,Y)-- [12:0-4-0,0-3-0]

LOADING (psf)		SPACING-	2-0-0	CSI.		DEFL.	in	(loc)	l/defl	L/d	PLATES	GRIP
TCLL	25.0	Plate Grip DOL	1.15	TC	0.68	Vert(LL)	-0.18	11-12	>999	240	MT20	197/144
TCDL	10.0	Lumber DOL	1.15	BC	0.87	Vert(CT)	-0.36	11-12	>999	180		
BCLL	0.0	Rep Stress Incr	YES	WB	0.26	Horz(CT)	0.12	9	n/a	n/a		
BCDL	10.0	Code IRC2018/TPI2014		Matrix-AS							Weight: 114 lb	FT = 20%

LUMBER-
TOP CHORD 2x4 SPF No.2
BOT CHORD 2x4 SPF No.2
WEBS 2x4 SPF No.2
SLIDER Left 2x4 SPF No.2 2-6-0, Right 2x4 SPF No.2 2-6-0

BRACING-
TOP CHORD Structural wood sheathing directly applied.
BOT CHORD Rigid ceiling directly applied.
WEBS 1 Row at midpt 7-12, 3-12

REACTIONS. (size) 1=0-3-8, 9=0-3-8
Max Horz 1=-126(LC 13)
Max Uplift 1=-232(LC 12), 9=-253(LC 13)
Max Grav 1=1379(LC 1), 9=1445(LC 1)

FORCES. (lb) - Max. Comp./Max. Ten. - All forces 250 (lb) or less except when shown.
TOP CHORD 1-3=-2479/417, 3-5=-1828/361, 5-7=-1828/358, 7-9=-2474/416
BOT CHORD 1-13=-407/2216, 12-13=-407/2216, 11-12=-286/2210, 9-11=-286/2210
WEBS 5-12=-83/791, 7-12=-756/275, 7-11=0/271, 3-12=-763/276, 3-13=0/271

NOTES-
1) Unbalanced roof live loads have been considered for this design.
2) Wind: ASCE 7-16; Vult=115mph (3-second gust) Vasd=91mph; TCDL=6.0psf; BCDL=4.2psf; h=25ft; Cat. II; Exp C; Enclosed; MWFRS (envelope) gable end zone and C-C Exterior(2E) 0-0-0 to 3-0-0, Interior(1) 3-0-0 to 15-4-0, Exterior(2R) 15-4-0 to 18-4-0, Interior(1) 18-4-0 to 31-7-0 zone; cantilever left and right exposed ; end vertical left and right exposed;C-C for members and forces & MWFRS for reactions shown; Lumber DOL=1.60 plate grip DOL=1.60
3) This truss has been designed for a 10.0 psf bottom chord live load nonconcurrent with any other live loads.
4) Provide mechanical connection (by others) of truss to bearing plate capable of withstanding 100 lb uplift at joint(s) except (jt=lb) 1=232, 9=253.
5) This truss is designed in accordance with the 2018 International Residential Code sections R502.11.1 and R802.10.2 and referenced standard ANSI/TPI 1.
6) This truss design requires that a minimum of 7/16" structural wood sheathing be applied directly to the top chord and 1/2" gypsum sheetrock be applied directly to the bottom chord.

STATE OF MISSOURI
XUEGANG LIU
NUMBER E-29713
PROFESSIONAL ENGINEER
July 20,2021

MiTek
16023 Swingley Ridge Rd
Chesterfield, MO 63017

Job	Truss	Truss Type	Qty	Ply	Summit/59 Woodside
2935533	P1	Monopitch	4	1	Job Reference (optional)

RELEASE FOR CONSTRUCTION
AS NOTED FOR PLAN REVIEW
DEVELOPMENT SERVICES
LEE'S SUMMIT, MISSOURI
10/22/2021

Builders FirstSource (Valley Center), Valley Center, KS - 67147, 8.430 s Jun 2 2021 MiTek Industries, Inc. Tue Jul 20 09:06:19 2021 Page 1
ID:VPVqvFnP0P0b1j2tZrlOqezdKbx-WF?ZOBr38DP6cq0jH0OCq6MnSuf6FxFGSYelAkywbMY

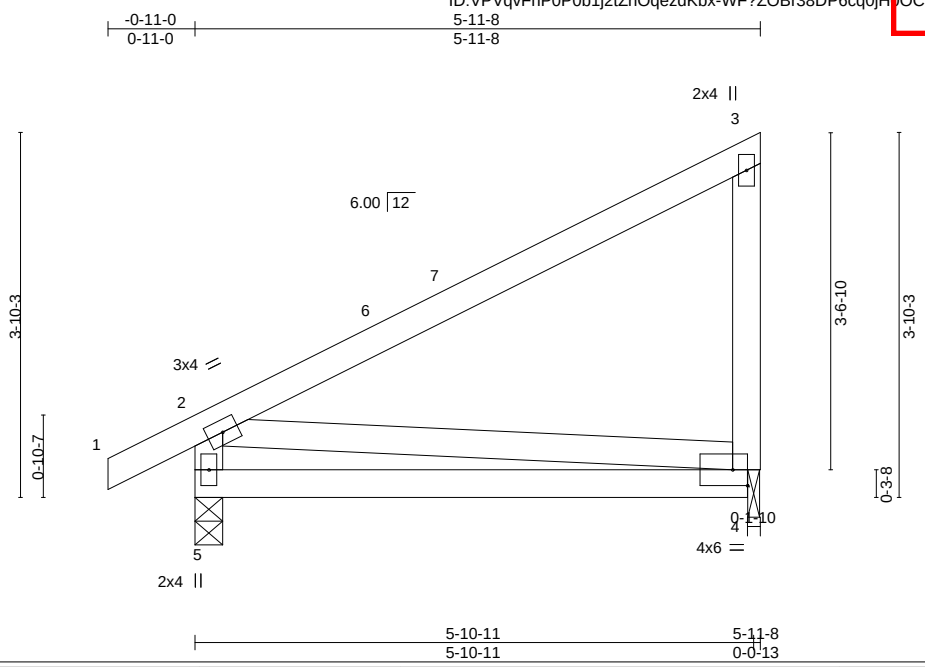

LOADING (psf)		SPACING-	2-0-0	CSI.		DEFL.	in	(loc)	l/defl	L/d	PLATES	GRIP
TCLL	25.0	Plate Grip DOL	1.15	TC	0.51	Vert(LL)	-0.06	4-5	>999	240	MT20	197/144
TCDL	10.0	Lumber DOL	1.15	BC	0.34	Vert(CT)	-0.12	4-5	>550	180		
BCLL	0.0	Rep Stress Incr	YES	WB	0.08	Horz(CT)	-0.00	4	n/a	n/a		
BCDL	10.0	Code IRC2018/TPI2014		Matrix-AS							Weight: 26 lb	FT = 20%

LUMBER-
TOP CHORD 2x4 SPF No.2
BOT CHORD 2x4 SPF No.2
WEBS 2x4 SPF No.2

BRACING-
TOP CHORD Structural wood sheathing directly applied, except end verticals.
BOT CHORD Rigid ceiling directly applied.

REACTIONS. (size) 5=0-3-8, 4=0-1-8
Max Horz 5=146(LC 11)
Max Uplift 5=-63(LC 12), 4=-77(LC 12)
Max Grav 5=336(LC 1), 4=248(LC 1)

FORCES. (lb) - Max. Comp./Max. Ten. - All forces 250 (lb) or less except when shown.
BOT CHORD 4-5=-294/193
WEBS 2-5=-280/206, 2-4=-142/250

NOTES-
1) Wind: ASCE 7-16; Vult=115mph (3-second gust) Vasd=91mph; TCDL=6.0psf; BCDL=4.2psf; h=25ft; Cat. II; Exp C; Enclosed; MWFRS (envelope) gable end zone and C-C Exterior(2E) -0-11-0 to 2-1-0, Interior(1) 2-1-0 to 5-9-12 zone; cantilever left and right exposed ; end vertical left and right exposed;C-C for members and forces & MWFRS for reactions shown; Lumber DOL=1.60 plate grip DOL=1.60
2) This truss has been designed for a 10.0 psf bottom chord live load nonconcurrent with any other live loads.
3) Bearing at joint(s) 4 considers parallel to grain value using ANSI/TPI 1 angle to grain formula. Building designer should verify capacity of bearing surface.
4) Provide mechanical connection (by others) of truss to bearing plate at joint(s) 4.
5) Provide mechanical connection (by others) of truss to bearing plate capable of withstanding 100 lb uplift at joint(s) 5, 4.
6) This truss is designed in accordance with the 2018 International Residential Code sections R502.11.1 and R802.10.2 and referenced standard ANSI/TPI 1.
7) This truss design requires that a minimum of 7/16" structural wood sheathing be applied directly to the top chord and 1/2" gypsum sheetrock be applied directly to the bottom chord.

STATE OF MISSOURI
XUEGANG LIU
NUMBER E-29713
PROFESSIONAL ENGINEER
July 20,2021

MiTek
16023 Swingley Ridge Rd
Chesterfield, MO 63017

RELEASE FOR CONSTRUCTION
AS NOTED FOR PLAN REVIEW
DEVELOPMENT SERVICES
LEE'S SUMMIT, MISSOURI
10/22/2021

Job	Truss	Truss Type	Qty	Ply	Summit/59 Woodside
2935533	V1	Valley	1	1	Job Reference (optional) I47079251

Builders FirstSource (Valley Center), Valley Center, KS - 67147, 8.430 s Jun 2 2021 MiTek Industries, Inc. Tue Jul 20 09:06:20 2021 Page 1
ID:VPVqvFnP0P0b1j2tZrlOqezdKbx-_RZxbXshvXXzD_avqvRMKuzDEDAOsPhCNrpmywDMX

5-9-9 | 11-7-2
5-9-9 | 5-9-9

Scale = 1:20.0

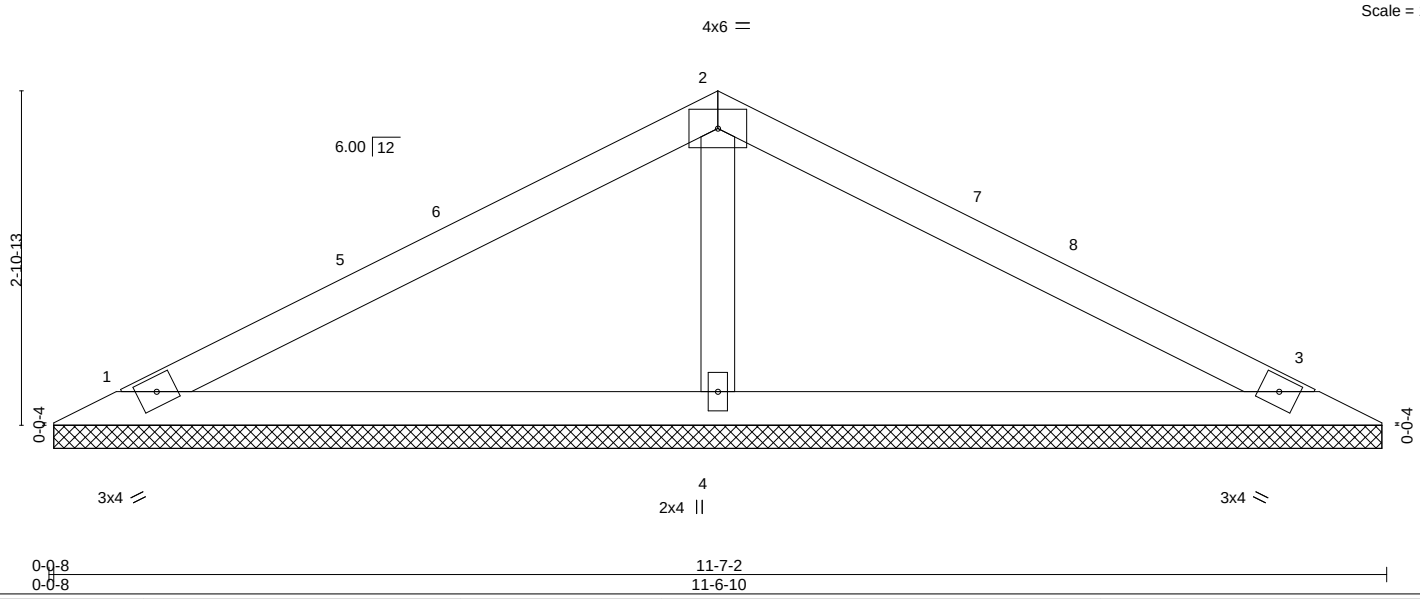

LOADING (psf)		SPACING- 2-0-0		CSI.		DEFL.	in	(loc)	l/defl	L/d	PLATES	GRIP
TCLL	25.0	Plate Grip DOL	1.15	TC	0.38	Vert(LL)	n/a	-	n/a	999	MT20	197/144
TCDL	10.0	Lumber DOL	1.15	BC	0.22	Vert(CT)	n/a	-	n/a	999		
BCLL	0.0	Rep Stress Incr	YES	WB	0.06	Horz(CT)	0.00	3	n/a	n/a		
BCDL	10.0	Code IRC2018/TPI2014		Matrix-S							Weight: 29 lb	FT = 20%

LUMBER-
TOP CHORD 2x4 SPF No.2
BOT CHORD 2x4 SPF No.2
OTHERS 2x4 SPF No.2

BRACING-
TOP CHORD Structural wood sheathing directly applied or 6-0-0 oc purlins.
BOT CHORD Rigid ceiling directly applied or 10-0-0 oc bracing.

REACTIONS. (size) 1=11-6-2, 3=11-6-2, 4=11-6-2
Max Horz 1=46(LC 12)
Max Uplift 1=-50(LC 12), 3=-59(LC 13), 4=-54(LC 12)
Max Grav 1=215(LC 25), 3=215(LC 26), 4=506(LC 1)

FORCES. (lb) - Max. Comp./Max. Ten. - All forces 250 (lb) or less except when shown.
WEBS 2-4=-350/196

NOTES-
1) Unbalanced roof live loads have been considered for this design.
2) Wind: ASCE 7-16; Vult=115mph (3-second gust) Vasd=91mph; TCDL=6.0psf; BCDL=4.2psf; h=25ft; Cat. II; Exp C; Enclosed; MWFRS (envelope) gable end zone and C-C Exterior(2E) 0-7-9 to 3-7-9, Interior(1) 3-7-9 to 5-9-9, Exterior(2R) 5-9-9 to 8-9-9, Interior(1) 8-9-9 to 10-11-9 zone; cantilever left and right exposed ; end vertical left and right exposed;C-C for members and forces & MWFRS for reactions shown; Lumber DOL=1.60 plate grip DOL=1.60
3) Gable requires continuous bottom chord bearing.
4) This truss has been designed for a 10.0 psf bottom chord live load nonconcurrent with any other live loads.
5) Provide mechanical connection (by others) of truss to bearing plate capable of withstanding 100 lb uplift at joint(s) 1, 3, 4.
6) This truss is designed in accordance with the 2018 International Residential Code sections R502.11.1 and R802.10.2 and referenced standard ANSI/TPI 1.

STATE OF MISSOURI
XUEGANG LIU
NUMBER E-29713
PROFESSIONAL ENGINEER
July 20,2021

MiTek
16023 Swingley Ridge Rd
Chesterfield, MO 63017

RELEASE FOR CONSTRUCTION
AS NOTED FOR PLAN REVIEW
DEVELOPMENT SERVICES
LEE'S SUMMIT, MISSOURI
10/22/2021

Job	Truss	Truss Type	Qty	Ply	Summit/59 Woodside I47079252
2935533	V2	Valley	1	1	Job Reference (optional)

Builders FirstSource (Valley Center), Valley Center, KS - 67147, 8.430 s Jun 2 2021 MiTek Industries, Inc. Tue Jul 20 09:06:24 2021 Page 1
ID:VPVqvFnP0P0b1j2tZrlOqezdKbx-tCoSRuvCzl1Picug3Z_NXA3i6r0j6Cd?caL3FxywDMT

3-9-9 | 7-7-2
3-9-9 | 3-9-9

Scale = 1:14.2

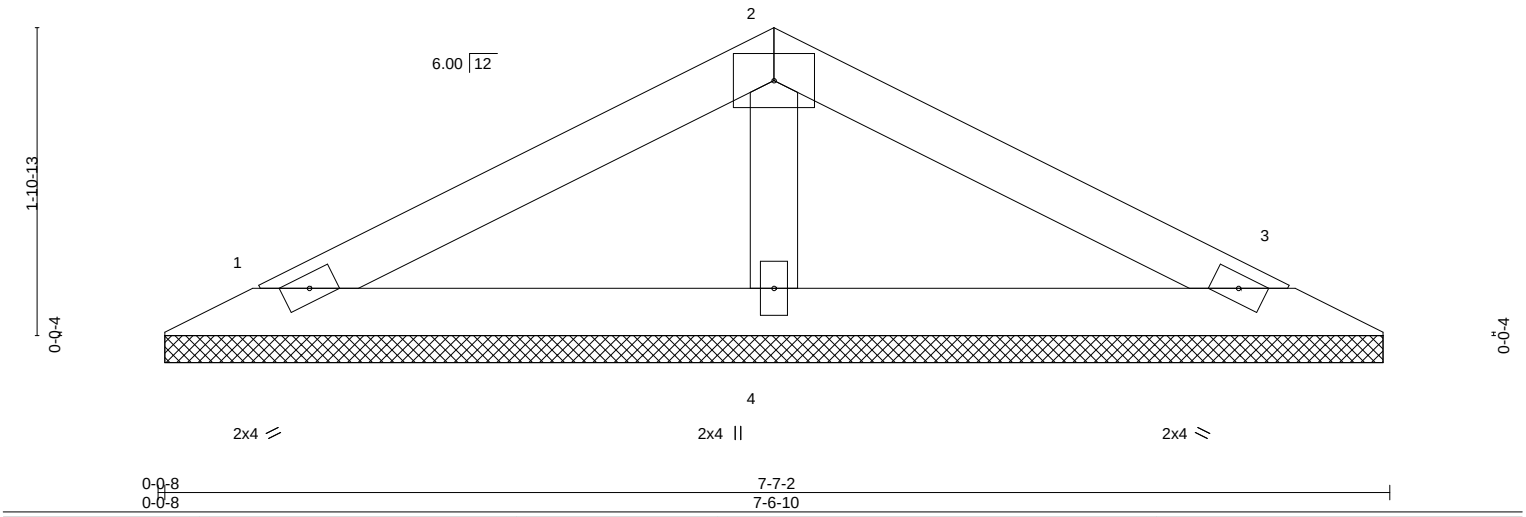

LOADING (psf)		SPACING- 2-0-0		CSI.		DEFL. in (loc) l/defl L/d		PLATES	GRIP
TCLL	25.0	Plate Grip DOL	1.15	TC	0.18	Vert(LL) n/a - n/a 999		MT20	197/144
TCDL	10.0	Lumber DOL	1.15	BC	0.09	Vert(CT) n/a - n/a 999			
BCLL	0.0	Rep Stress Incr	YES	WB	0.03	Horz(CT) 0.00 3 n/a n/a			
BCDL	10.0	Code IRC2018/TPI2014		Matrix-P				Weight: 18 lb	FT = 20%

LUMBER-
TOP CHORD 2x4 SPF No.2
BOT CHORD 2x4 SPF No.2
OTHERS 2x4 SPF No.2

BRACING-
TOP CHORD Structural wood sheathing directly applied or 6-0-0 oc purlins.
BOT CHORD Rigid ceiling directly applied or 10-0-0 oc bracing.

REACTIONS. (size) 1=7-6-2, 3=7-6-2, 4=7-6-2
Max Horz 1=28(LC 16)
Max Uplift 1=-37(LC 12), 3=-43(LC 13), 4=-20(LC 12)
Max Grav 1=145(LC 1), 3=145(LC 1), 4=280(LC 1)

FORCES. (lb) - Max. Comp./Max. Ten. - All forces 250 (lb) or less except when shown.

NOTES-
1) Unbalanced roof live loads have been considered for this design.
2) Wind: ASCE 7-16; Vult=115mph (3-second gust) Vasd=91mph; TCDL=6.0psf; BCDL=4.2psf; h=25ft; Cat. II; Exp C; Enclosed; MWFRS (envelope) gable end zone and C-C Exterior(2E) zone; cantilever left and right exposed ; end vertical left and right exposed;C-C for members and forces & MWFRS for reactions shown; Lumber DOL=1.60 plate grip DOL=1.60
3) Gable requires continuous bottom chord bearing.
4) This truss has been designed for a 10.0 psf bottom chord live load nonconcurrent with any other live loads.
5) Provide mechanical connection (by others) of truss to bearing plate capable of withstanding 100 lb uplift at joint(s) 1, 3, 4.
6) This truss is designed in accordance with the 2018 International Residential Code sections R502.11.1 and R802.10.2 and referenced standard ANSI/TPI 1.

STATE OF MISSOURI
XUEGANG LIU
NUMBER E-29713
PROFESSIONAL ENGINEER

July 20,2021

MiTek
16023 Swingley Ridge Rd
Chesterfield, MO 63017

Job	Truss	Truss Type	Qty	Ply	Summit/59 Woodside
2935533	V4	Valley	1	1	Job Reference (optional)

RELEASE FOR CONSTRUCTION
AS NOTED FOR PLAN REVIEW
DEVELOPMENT SERVICES
LEE'S SUMMIT, MISSOURI
I47079253
10/22/2021

Builders FirstSource (Valley Center), Valley Center, KS - 67147, 8.430 s Jun 2 2021 MiTek Industries, Inc. Tue Jul 20 09:06:24 2021 Page 1
ID:VPVqvFnP0P0b1j2tZrlOqezdKbx-tCoSRuvCzl1Picuq3Z_NXA3hZr0yl6O?caL3FXywOMT

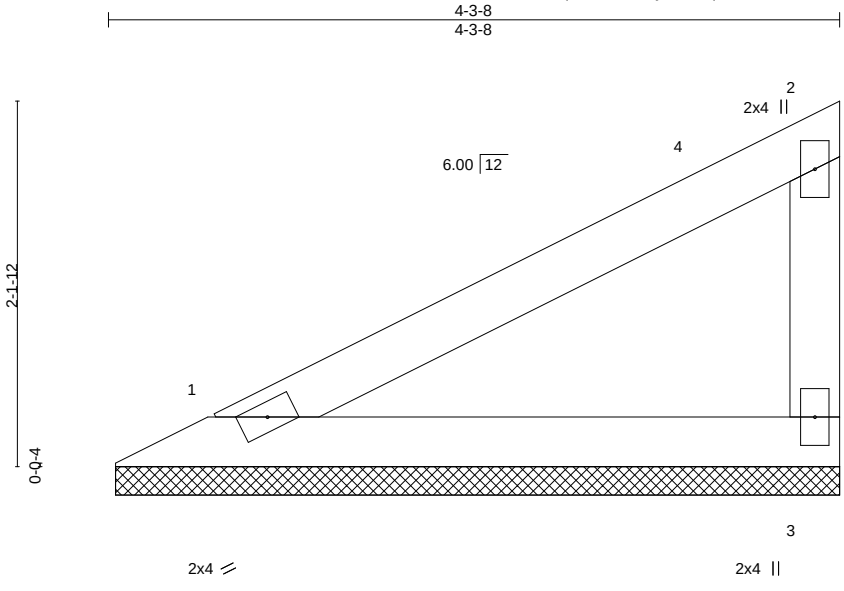

LOADING (psf)		SPACING-	2-0-0	CSI.		DEFL.	in	(loc)	l/defl	L/d	PLATES	GRIP
TCLL	25.0	Plate Grip DOL	1.15	TC	0.23	Vert(LL)	n/a	-	n/a	999	MT20	197/144
TCDL	10.0	Lumber DOL	1.15	BC	0.12	Vert(CT)	n/a	-	n/a	999		
BCLL	0.0	Rep Stress Incr	YES	WB	0.00	Horz(CT)	0.00	3	n/a	n/a		
BCDL	10.0	Code IRC2018/TPI2014		Matrix-P							Weight: 11 lb	FT = 20%

LUMBER-
TOP CHORD 2x4 SPF No.2
BOT CHORD 2x4 SPF No.2
WEBS 2x4 SPF No.2

BRACING-
TOP CHORD Structural wood sheathing directly applied or 4-3-8 oc purlins, except end verticals.
BOT CHORD Rigid ceiling directly applied or 10-0-0 oc bracing.

REACTIONS. (size) 1=4-3-0, 3=4-3-0
Max Horz 1=73(LC 9)
Max Uplift 1=-27(LC 12), 3=-45(LC 12)
Max Grav 1=158(LC 1), 3=158(LC 1)

FORCES. (lb) - Max. Comp./Max. Ten. - All forces 250 (lb) or less except when shown.

NOTES-
1) Wind: ASCE 7-16; Vult=115mph (3-second gust) Vasd=91mph; TCDL=6.0psf; BCDL=4.2psf; h=25ft; Cat. II; Exp C; Enclosed; MWFRS (envelope) gable end zone and C-C Exterior(2E) 0-7-9 to 3-7-9, Interior(1) 3-7-9 to 4-1-12 zone; cantilever left and right exposed ; end vertical left and right exposed;C-C for members and forces & MWFRS for reactions shown; Lumber DOL=1.60 plate grip DOL=1.60
2) Gable requires continuous bottom chord bearing.
3) This truss has been designed for a 10.0 psf bottom chord live load nonconcurrent with any other live loads.
4) Provide mechanical connection (by others) of truss to bearing plate capable of withstanding 100 lb uplift at joint(s) 1, 3.
5) This truss is designed in accordance with the 2018 International Residential Code sections R502.11.1 and R802.10.2 and referenced standard ANSI/TPI 1.

July 20,2021

MiTek
16023 Swingley Ridge Rd
Chesterfield, MO 63017

RELEASE FOR CONSTRUCTION
AS NOTED FOR PLAN REVIEW
DEVELOPMENT SERVICES
LEE'S SUMMIT, MISSOURI
10/22/2021

Job	Truss	Truss Type	Qty	Ply	Summit/59 Woodside I47079254
2935533	V5	Valley	1	1	Job Reference (optional)

Builders FirstSource (Valley Center), Valley Center, KS - 67147, 8.430 s Jun 2 2021 MiTek Industries, Inc. Tue Jul 20 09:06:25 2021 Page 1
ID:VPVqvFnP0P0b1j2tZrlOqezdKbx-LPMqfEvqj39GKlTtdGVc3hcvFnOr28rD5ozywDMS

2-7-8
2-7-8

Scale = 1:9.4

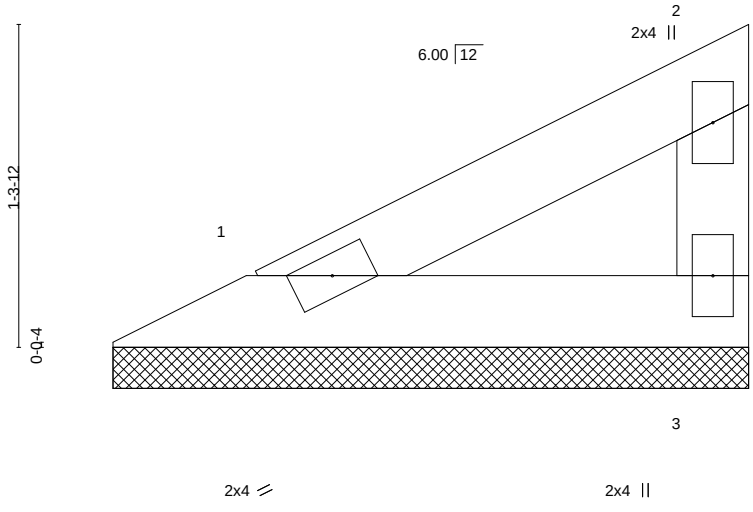

LOADING (psf)		SPACING-	2-0-0	CSI.		DEFL.	in	(loc)	l/defl	L/d	PLATES	GRIP
TCLL	25.0	Plate Grip DOL	1.15	TC	0.06	Vert(LL)	n/a	-	n/a	999	MT20	197/144
TCDL	10.0	Lumber DOL	1.15	BC	0.03	Vert(CT)	n/a	-	n/a	999		
BCLL	0.0	Rep Stress Incr	YES	WB	0.00	Horz(CT)	0.00	3	n/a	n/a		
BCDL	10.0	Code IRC2018/TPI2014		Matrix-P							Weight: 6 lb	FT = 20%

LUMBER-
TOP CHORD 2x4 SPF No.2
BOT CHORD 2x4 SPF No.2
WEBS 2x4 SPF No.2

BRACING-
TOP CHORD Structural wood sheathing directly applied or 2-7-8 oc purlins, except end verticals.
BOT CHORD Rigid ceiling directly applied or 10-0-0 oc bracing.

REACTIONS. (size) 1=2-7-0, 3=2-7-0
Max Horz 1=39(LC 9)
Max Uplift 1=-14(LC 12), 3=-24(LC 12)
Max Grav 1=83(LC 1), 3=83(LC 1)

FORCES. (lb) - Max. Comp./Max. Ten. - All forces 250 (lb) or less except when shown.

NOTES-
1) Wind: ASCE 7-16; Vult=115mph (3-second gust) Vasd=91mph; TCDL=6.0psf; BCDL=4.2psf; h=25ft; Cat. II; Exp C; Enclosed; MWFRS (envelope) gable end zone and C-C Exterior(2E) zone; cantilever left and right exposed ; end vertical left and right exposed;C-C for members and forces & MWFRS for reactions shown; Lumber DOL=1.60 plate grip DOL=1.60
2) Gable requires continuous bottom chord bearing.
3) This truss has been designed for a 10.0 psf bottom chord live load nonconcurrent with any other live loads.
4) Provide mechanical connection (by others) of truss to bearing plate capable of withstanding 100 lb uplift at joint(s) 1, 3.
5) This truss is designed in accordance with the 2018 International Residential Code sections R502.11.1 and R802.10.2 and referenced standard ANSI/TPI 1.

STATE OF MISSOURI
XUEGANG LIU
NUMBER E-29713
PROFESSIONAL ENGINEER

July 20,2021

MiTek
16023 Swingley Ridge Rd
Chesterfield, MO 63017

RELEASE FOR CONSTRUCTION
AS NOTED FOR PLAN REVIEW
DEVELOPMENT SERVICES
LEE'S SUMMIT, MISSOURI
10/22/2021

Job	Truss	Truss Type	Qty	Ply	Summit/59 Woodside I47079255
2935533	V6	Valley	1	1	Job Reference (optional)

Builders FirstSource (Valley Center), Valley Center, KS - 67147, 8.430 s Jun 2 2021 MiTek Industries, Inc. Tue Jul 20 09:06:26 2021 Page 1
ID:VPVqvFnP0P0b1j2tZrlOqezdKbx-pbwCsawSUNH7xv23B_0rcb84ofTZ1eDH38aAfQywDMR

2-8-12
2-8-12

Scale = 1:9.6

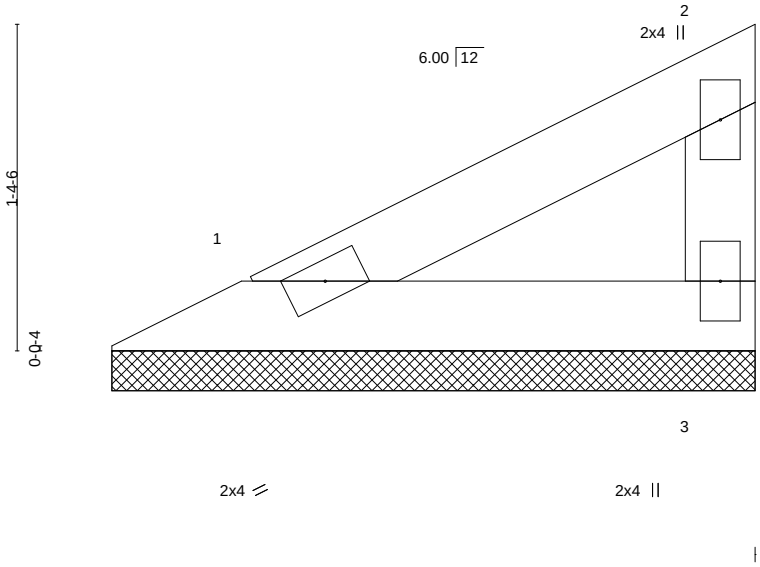

LOADING (psf)		SPACING-	2-0-0	CSI.		DEFL.	in	(loc)	l/defl	L/d	PLATES	GRIP
TCLL	25.0	Plate Grip DOL	1.15	TC	0.06	Vert(LL)	n/a	-	n/a	999	MT20	197/144
TCDL	10.0	Lumber DOL	1.15	BC	0.03	Vert(CT)	n/a	-	n/a	999		
BCLL	0.0	Rep Stress Incr	YES	WB	0.00	Horz(CT)	0.00	3	n/a	n/a		
BCDL	10.0	Code IRC2018/TPI2014		Matrix-P							Weight: 7 lb	FT = 20%

LUMBER-
TOP CHORD 2x4 SPF No.2
BOT CHORD 2x4 SPF No.2
WEBS 2x4 SPF No.2

BRACING-
TOP CHORD Structural wood sheathing directly applied or 2-8-12 oc purlins, except end verticals.
BOT CHORD Rigid ceiling directly applied or 10-0-0 oc bracing.

REACTIONS. (size) 1=2-8-4, 3=2-8-4
Max Horz 1=41(LC 9)
Max Uplift 1=-15(LC 12), 3=-25(LC 12)
Max Grav 1=88(LC 1), 3=88(LC 1)

FORCES. (lb) - Max. Comp./Max. Ten. - All forces 250 (lb) or less except when shown.

NOTES-
1) Wind: ASCE 7-16; Vult=115mph (3-second gust) Vasd=91mph; TCDL=6.0psf; BCDL=4.2psf; h=25ft; Cat. II; Exp C; Enclosed; MWFRS (envelope) gable end zone and C-C Exterior(2E) zone; cantilever left and right exposed ; end vertical left and right exposed;C-C for members and forces & MWFRS for reactions shown; Lumber DOL=1.60 plate grip DOL=1.60
2) Gable requires continuous bottom chord bearing.
3) This truss has been designed for a 10.0 psf bottom chord live load nonconcurrent with any other live loads.
4) Provide mechanical connection (by others) of truss to bearing plate capable of withstanding 100 lb uplift at joint(s) 1, 3.
5) This truss is designed in accordance with the 2018 International Residential Code sections R502.11.1 and R802.10.2 and referenced standard ANSI/TPI 1.

STATE OF MISSOURI
XUEGANG LIU
NUMBER E-29713
PROFESSIONAL ENGINEER

July 20,2021

MiTek
16023 Swingley Ridge Rd
Chesterfield, MO 63017

Job	Truss	Truss Type	Qty	Ply	Summit/59 Woodside
2935533	V7	Valley	1	1	Job Reference (optional)

I47079256

Builders FirstSource (Valley Center), Valley Center, KS - 67147, 8.430 s Jun 2 2021 MiTek Industries, Inc. Tue Jul 20 09:06:27 2021 Page 1
ID:VPVqvFnP0P0b1j2tZrlOqezdKbx-HnUb3wx4FgP_Z3dFlhX49onCa2R0JZTRJoaSsywDMQ

4-4-12
4-4-12

Scale = 1:13.8

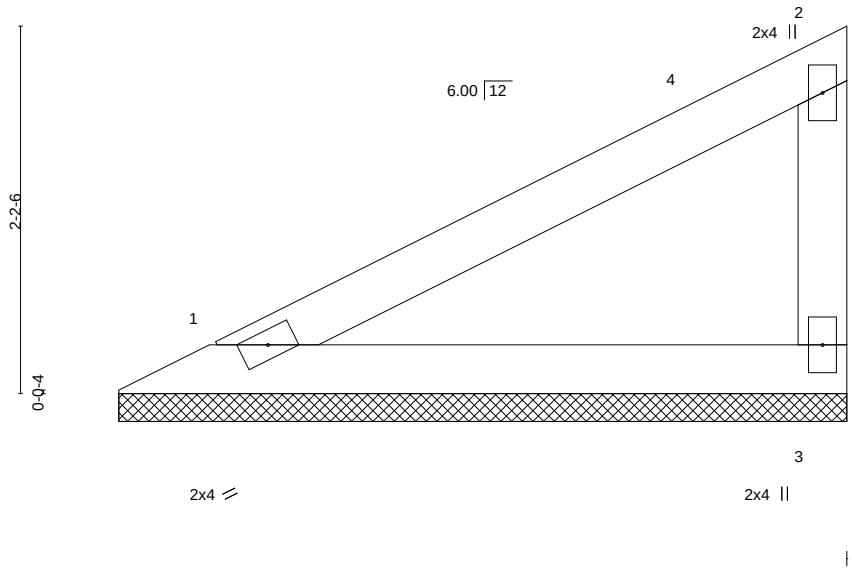

LOADING (psf)		SPACING-	2-0-0	CSI.		DEFL.	in	(loc)	l/defl	L/d	PLATES	GRIP
TCLL	25.0	Plate Grip DOL	1.15	TC	0.24	Vert(LL)	n/a	-	n/a	999	MT20	197/144
TCDL	10.0	Lumber DOL	1.15	BC	0.13	Vert(CT)	n/a	-	n/a	999		
BCLL	0.0	Rep Stress Incr	YES	WB	0.00	Horz(CT)	0.00	3	n/a	n/a		
BCDL	10.0	Code IRC2018/TPI2014		Matrix-P							Weight: 12 lb	FT = 20%

LUMBER-
TOP CHORD 2x4 SPF No.2
BOT CHORD 2x4 SPF No.2
WEBS 2x4 SPF No.2

BRACING-
TOP CHORD Structural wood sheathing directly applied or 4-4-12 oc purlins, except end verticals.
BOT CHORD Rigid ceiling directly applied or 10-0-0 oc bracing.

REACTIONS. (size) 1=4-4-4, 3=4-4-4
Max Horz 1=76(LC 9)
Max Uplift 1=-27(LC 12), 3=-46(LC 12)
Max Grav 1=163(LC 1), 3=163(LC 1)

FORCES. (lb) - Max. Comp./Max. Ten. - All forces 250 (lb) or less except when shown.

NOTES-
1) Wind: ASCE 7-16; Vult=115mph (3-second gust) Vasd=91mph; TCDL=6.0psf; BCDL=4.2psf; h=25ft; Cat. II; Exp C; Enclosed; MWFRS (envelope) gable end zone and C-C Exterior(2E) 0-7-9 to 3-7-9, Interior(1) 3-7-9 to 4-3-0 zone; cantilever left and right exposed ; end vertical left and right exposed;C-C for members and forces & MWFRS for reactions shown; Lumber DOL=1.60 plate grip DOL=1.60
2) Gable requires continuous bottom chord bearing.
3) This truss has been designed for a 10.0 psf bottom chord live load nonconcurrent with any other live loads.
4) Provide mechanical connection (by others) of truss to bearing plate capable of withstanding 100 lb uplift at joint(s) 1, 3.
5) This truss is designed in accordance with the 2018 International Residential Code sections R502.11.1 and R802.10.2 and referenced standard ANSI/TPI 1.

July 20,2021

MiTek
16023 Swingley Ridge Rd
Chesterfield, MO 63017

Job	Truss	Truss Type	Qty	Ply	Summit/59 Woodside
2935533	V8	Valley	1	1	Job Reference (optional)

RELEASE FOR CONSTRUCTION
AS NOTED FOR PLAN REVIEW
DEVELOPMENT SERVICES
LEE'S SUMMIT, MISSOURI
I47079257
10/22/2021

Builders FirstSource (Valley Center), Valley Center, KS - 67147, 8.430 s Jun 2 2021 MiTek Industries, Inc. Tue Jul 20 09:06:29 2021 Page 1
ID:VPVqvFnP0P0b1j2tZrlOqezdKbx-lz1zHGyi0_XqBDCRIP3Jh0EL5nIu20laX3JGOywDMP

9-9-14
9-9-14

Scale = 1:30.5

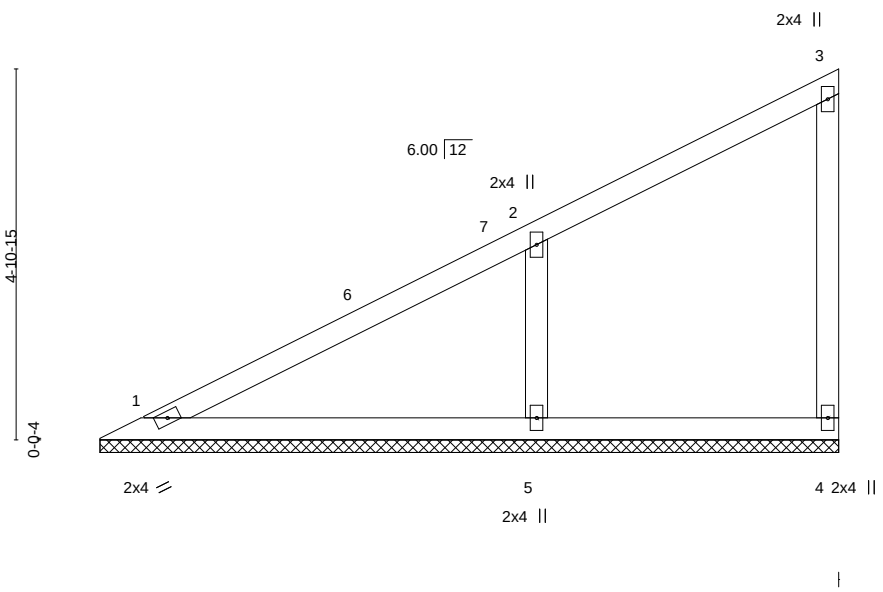

LOADING (psf)		SPACING-	2-0-0	CSI.		DEFL.	in	(loc)	l/defl	L/d	PLATES	GRIP
TCLL	25.0	Plate Grip DOL	1.15	TC	0.34	Vert(LL)	n/a	-	n/a	999	MT20	197/144
TCDL	10.0	Lumber DOL	1.15	BC	0.18	Vert(CT)	n/a	-	n/a	999		
BCLL	0.0	Rep Stress Incr	YES	WB	0.06	Horz(CT)	-0.00	4	n/a	n/a		
BCDL	10.0	Code IRC2018/TPI2014		Matrix-S							Weight: 30 lb	FT = 20%

LUMBER-
TOP CHORD 2x4 SPF No.2
BOT CHORD 2x4 SPF No.2
WEBS 2x4 SPF No.2
OTHERS 2x4 SPF No.2

BRACING-
TOP CHORD Structural wood sheathing directly applied or 6-0-0 oc purlins, except end verticals.
BOT CHORD Rigid ceiling directly applied or 10-0-0 oc bracing.

REACTIONS. (size) 1=9-9-6, 4=9-9-6, 5=9-9-6
Max Horz 1=188(LC 9)
Max Uplift 1=-2(LC 12), 4=-33(LC 9), 5=-141(LC 12)
Max Grav 1=189(LC 1), 4=113(LC 1), 5=512(LC 1)

FORCES. (lb) - Max. Comp./Max. Ten. - All forces 250 (lb) or less except when shown.
TOP CHORD 1-2=-268/178
WEBS 2-5=-387/278

NOTES-
1) Wind: ASCE 7-16; Vult=115mph (3-second gust) Vasd=91mph; TCDL=6.0psf; BCDL=4.2psf; h=25ft; Cat. II; Exp C; Enclosed; MWFRS (envelope) gable end zone and C-C Exterior(2E) 0-7-9 to 3-7-9, Interior(1) 3-7-9 to 9-8-2 zone; cantilever left and right exposed ; end vertical left and right exposed;C-C for members and forces & MWFRS for reactions shown; Lumber DOL=1.60 plate grip DOL=1.60
2) Gable requires continuous bottom chord bearing.
3) This truss has been designed for a 10.0 psf bottom chord live load nonconcurrent with any other live loads.
4) Provide mechanical connection (by others) of truss to bearing plate capable of withstanding 100 lb uplift at joint(s) 1, 4 except (jt=lb) 5=141.
5) This truss is designed in accordance with the 2018 International Residential Code sections R502.11.1 and R802.10.2 and referenced standard ANSI/TPI 1.

STATE OF MISSOURI
XUEGANG LIU
NUMBER E-29713
PROFESSIONAL ENGINEER
July 20,2021

MiTek
16023 Swingley Ridge Rd
Chesterfield, MO 63017

Job	Truss	Truss Type	Qty	Ply	Summit/59 Woodside
2935533	V9	Valley	1	1	Job Reference (optional)

RELEASE FOR CONSTRUCTION
AS NOTED FOR PLAN REVIEW
DEVELOPMENT SERVICES
LEE'S SUMMIT, MISSOURI
10/22/2021

Builders FirstSource (Valley Center), Valley Center, KS - 67147, 8.430 s Jun 2 2021 MiTek Industries, Inc. Tue Jul 20 09:06:29 2021 Page 1
ID:VPVqvFnP0P0b1j2tZrlOqezdKbx-lz1zHGyi0_XqBDCFIP3Jh0ENcSnh20_aXSJGOywDMP

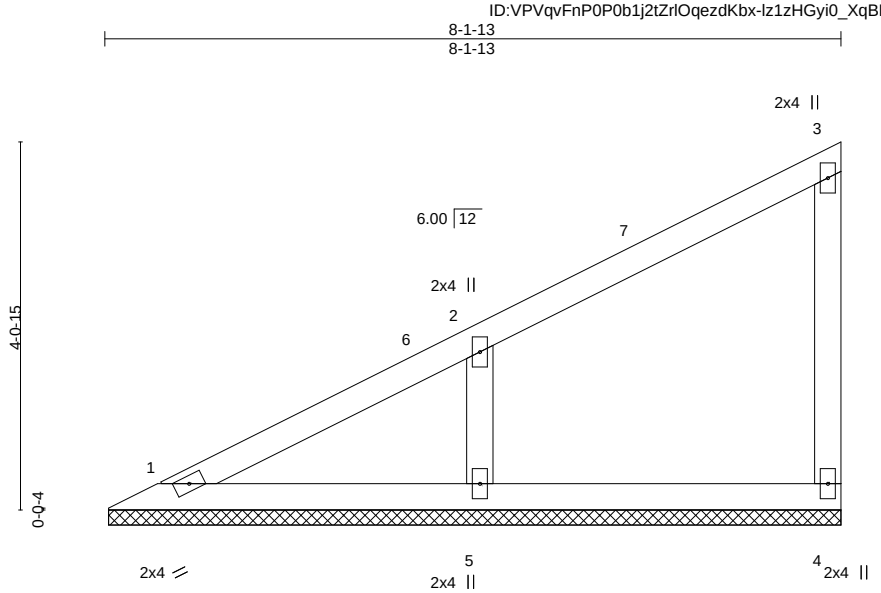

LOADING (psf)		SPACING-	2-0-0	CSI.		DEFL.	in	(loc)	l/defl	L/d	PLATES	GRIP
TCLL	25.0	Plate Grip DOL	1.15	TC	0.22	Vert(LL)	n/a	-	n/a	999	MT20	197/144
TCDL	10.0	Lumber DOL	1.15	BC	0.11	Vert(CT)	n/a	-	n/a	999		
BCLL	0.0	Rep Stress Incr	YES	WB	0.05	Horz(CT)	-0.00	4	n/a	n/a		
BCDL	10.0	Code IRC2018/TPI2014		Matrix-P							Weight: 25 lb	FT = 20%

LUMBER-
TOP CHORD 2x4 SPF No.2
BOT CHORD 2x4 SPF No.2
WEBS 2x4 SPF No.2
OTHERS 2x4 SPF No.2

BRACING-
TOP CHORD Structural wood sheathing directly applied or 6-0-0 oc purlins, except end verticals.
BOT CHORD Rigid ceiling directly applied or 10-0-0 oc bracing.

REACTIONS. (size) 1=8-1-5, 4=8-1-5, 5=8-1-5
Max Horz 1=154(LC 9)
Max Uplift 4=-31(LC 9), 5=-130(LC 12)
Max Grav 1=121(LC 20), 4=134(LC 1), 5=415(LC 1)

FORCES. (lb) - Max. Comp./Max. Ten. - All forces 250 (lb) or less except when shown.
TOP CHORD 1-2=-255/161
WEBS 2-5=-323/270

NOTES-
1) Wind: ASCE 7-16; Vult=115mph (3-second gust) Vasd=91mph; TCDL=6.0psf; BCDL=4.2psf; h=25ft; Cat. II; Exp C; Enclosed; MWFRS (envelope) gable end zone and C-C Exterior(2E) 0-7-9 to 3-7-9, Interior(1) 3-7-9 to 8-0-1 zone; cantilever left and right exposed ; end vertical left and right exposed;C-C for members and forces & MWFRS for reactions shown; Lumber DOL=1.60 plate grip DOL=1.60
2) Gable requires continuous bottom chord bearing.
3) This truss has been designed for a 10.0 psf bottom chord live load nonconcurrent with any other live loads.
4) Provide mechanical connection (by others) of truss to bearing plate capable of withstanding 100 lb uplift at joint(s) 4 except (jt=lb) 5=130.
5) This truss is designed in accordance with the 2018 International Residential Code sections R502.11.1 and R802.10.2 and referenced standard ANSI/TPI 1.

STATE OF MISSOURI
XUEGANG LIU
NUMBER E-29713
PROFESSIONAL ENGINEER

July 20,2021

MiTek
16023 Swingley Ridge Rd
Chesterfield, MO 63017

RELEASE FOR CONSTRUCTION
AS NOTED FOR PLAN REVIEW
DEVELOPMENT SERVICES
LEE'S SUMMIT, MISSOURI
10/22/2021

Job	Truss	Truss Type	Qty	Ply	Summit/59 Woodside I47079259
2935533	V10	Valley	1	1	Job Reference (optional)

Builders FirstSource (Valley Center), Valley Center, KS - 67147, 8.430 s Jun 2 2021 MiTek Industries, Inc. Tue Jul 20 09:06:21 2021 Page 1
ID:VPVqvFnP0P0b1j2tZrlOqezdKbx-Td6JpssJgqfqr895OFRgvXRB1e0Cv?FYws7PeCywLMW

6-5-14
6-5-14

Scale = 1:20.2

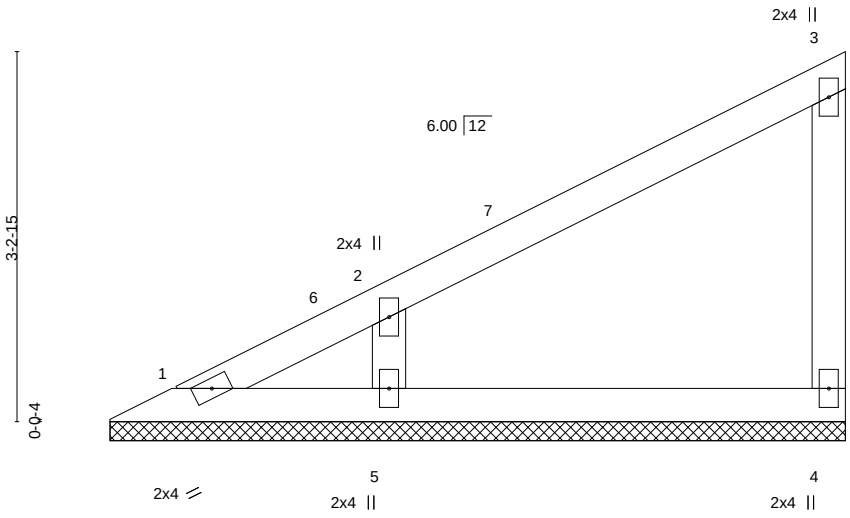

LOADING (psf)		SPACING- 2-0-0		CSI.		DEFL. in (loc) l/defl L/d		PLATES	GRIP
TCLL	25.0	Plate Grip DOL	1.15	TC	0.18	Vert(LL) n/a - n/a 999		MT20	197/144
TCDL	10.0	Lumber DOL	1.15	BC	0.10	Vert(CT) n/a - n/a 999			
BCLL	0.0	Rep Stress Incr	YES	WB	0.05	Horz(CT) 0.00 4 n/a n/a			
BCDL	10.0	Code IRC2018/TPI2014		Matrix-P				Weight: 19 lb	FT = 20%

LUMBER-
TOP CHORD 2x4 SPF No.2
BOT CHORD 2x4 SPF No.2
WEBS 2x4 SPF No.2
OTHERS 2x4 SPF No.2

BRACING-
TOP CHORD Structural wood sheathing directly applied or 6-0-0 oc purlins, except end verticals.
BOT CHORD Rigid ceiling directly applied or 10-0-0 oc bracing.

REACTIONS. (size) 1=6-5-6, 4=6-5-6, 5=6-5-6
Max Horz 1=119(LC 9)
Max Uplift 4=-37(LC 12), 5=-121(LC 12)
Max Grav 1=46(LC 9), 4=141(LC 1), 5=357(LC 1)

FORCES. (lb) - Max. Comp./Max. Ten. - All forces 250 (lb) or less except when shown.
WEBS 2-5=-277/272

NOTES-
1) Wind: ASCE 7-16; Vult=115mph (3-second gust) Vasd=91mph; TCDL=6.0psf; BCDL=4.2psf; h=25ft; Cat. II; Exp C; Enclosed; MWFRS (envelope) gable end zone and C-C Exterior(2E) 0-7-9 to 3-7-9, Interior(1) 3-7-9 to 6-4-2 zone; cantilever left and right exposed ; end vertical left and right exposed;C-C for members and forces & MWFRS for reactions shown; Lumber DOL=1.60 plate grip DOL=1.60
2) Gable requires continuous bottom chord bearing.
3) This truss has been designed for a 10.0 psf bottom chord live load nonconcurrent with any other live loads.
4) Provide mechanical connection (by others) of truss to bearing plate capable of withstanding 100 lb uplift at joint(s) 4 except (jt=lb) 5=121.
5) This truss is designed in accordance with the 2018 International Residential Code sections R502.11.1 and R802.10.2 and referenced standard ANSI/TPI 1.

STATE OF MISSOURI
XUEGANG LIU
NUMBER E-29713
PROFESSIONAL ENGINEER

July 20,2021

MiTek
16023 Swingley Ridge Rd
Chesterfield, MO 63017

Job	Truss	Truss Type	Qty	Ply	Summit/59 Woodside
2935533	V11	Valley	1	1	Job Reference (optional)

RELEASE FOR CONSTRUCTION
AS NOTED FOR PLAN REVIEW
DEVELOPMENT SERVICES
LEE'S SUMMIT, MISSOURI
10/22/2021

Builders FirstSource (Valley Center), Valley Center, KS - 67147, 8.430 s Jun 2 2021 MiTek Industries, Inc. Tue Jul 20 09:06:22 2021 Page 1
ID:VPVqvFnP0P0b1j2tZrlOqezdKbx-xqgi0CtxR8nhTlkIy8yvS_Kq7jjeIZi8WsyBeywDMV

Scale = 1:14.8

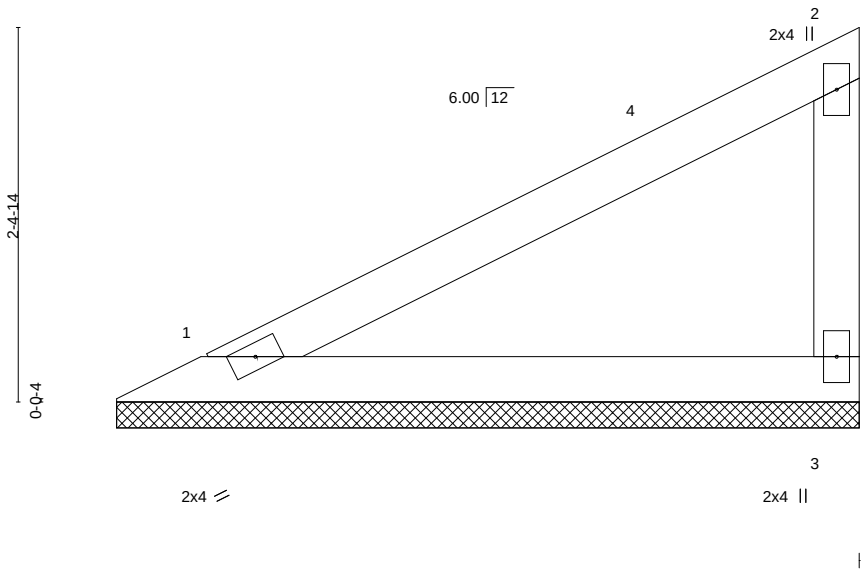

LOADING (psf)		SPACING-	2-0-0	CSI.		DEFL.	in	(loc)	l/defl	L/d	PLATES	GRIP
TCLL	25.0	Plate Grip DOL	1.15	TC	0.30	Vert(LL)	n/a	-	n/a	999	MT20	197/144
TCDL	10.0	Lumber DOL	1.15	BC	0.16	Vert(CT)	n/a	-	n/a	999		
BCLL	0.0	Rep Stress Incr	YES	WB	0.00	Horz(CT)	0.00	3	n/a	n/a		
BCDL	10.0	Code IRC2018/TPI2014		Matrix-P							Weight: 13 lb	FT = 20%

LUMBER-
TOP CHORD 2x4 SPF No.2
BOT CHORD 2x4 SPF No.2
WEBS 2x4 SPF No.2

BRACING-
TOP CHORD Structural wood sheathing directly applied or 4-9-13 oc purlins, except end verticals.
BOT CHORD Rigid ceiling directly applied or 10-0-0 oc bracing.

REACTIONS. (size) 1=4-9-5, 3=4-9-5
Max Horz 1=84(LC 9)
Max Uplift 1=-31(LC 12), 3=-52(LC 12)
Max Grav 1=182(LC 1), 3=182(LC 1)

FORCES. (lb) - Max. Comp./Max. Ten. - All forces 250 (lb) or less except when shown.

NOTES-
1) Wind: ASCE 7-16; Vult=115mph (3-second gust) Vasd=91mph; TCDL=6.0psf; BCDL=4.2psf; h=25ft; Cat. II; Exp C; Enclosed; MWFRS (envelope) gable end zone and C-C Exterior(2E) 0-7-9 to 3-7-9, Interior(1) 3-7-9 to 4-8-1 zone; cantilever left and right exposed ; end vertical left and right exposed;C-C for members and forces & MWFRS for reactions shown; Lumber DOL=1.60 plate grip DOL=1.60
2) Gable requires continuous bottom chord bearing.
3) This truss has been designed for a 10.0 psf bottom chord live load nonconcurrent with any other live loads.
4) Provide mechanical connection (by others) of truss to bearing plate capable of withstanding 100 lb uplift at joint(s) 1, 3.
5) This truss is designed in accordance with the 2018 International Residential Code sections R502.11.1 and R802.10.2 and referenced standard ANSI/TPI 1.

STATE OF MISSOURI
XUEGANG LIU
NUMBER E-29713
PROFESSIONAL ENGINEER

July 20,2021

MiTek
16023 Swingley Ridge Rd
Chesterfield, MO 63017

RELEASE FOR CONSTRUCTION
AS NOTED FOR PLAN REVIEW
DEVELOPMENT SERVICES
LEE'S SUMMIT, MISSOURI
10/22/2021

Job	Truss	Truss Type	Qty	Ply	Summit/59 Woodside	I47079261
2935533	V12	Valley	1	1	Job Reference (optional)	

Builders FirstSource (Valley Center), Valley Center, KS - 67147, 8.430 s Jun 2 2021 MiTek Industries, Inc. Tue Jul 20 09:06:23 2021 Page 1
ID:VPVqvFnP0P0b1j2tZrlOqezdKbx-P0E4EYuZCSvY4SJUWrT8_yWYcRsANTrNXcvj5ywDMU

3-1-14
3-1-14

Scale = 1:10.7

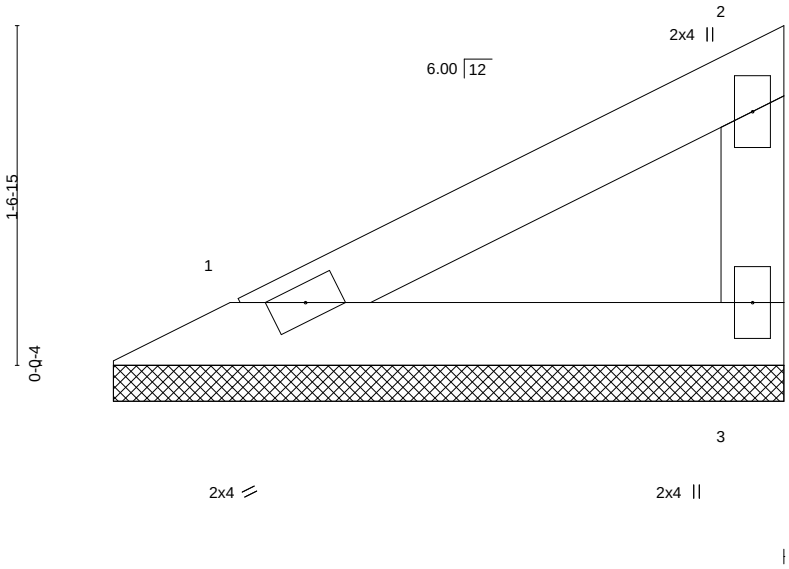

LOADING (psf)		SPACING-	2-0-0	CSI.		DEFL.	in	(loc)	l/defl	L/d	PLATES	GRIP
TCLL	25.0	Plate Grip DOL	1.15	TC	0.10	Vert(LL)	n/a	-	n/a	999	MT20	197/144
TCDL	10.0	Lumber DOL	1.15	BC	0.05	Vert(CT)	n/a	-	n/a	999		
BCLL	0.0	Rep Stress Incr	YES	WB	0.00	Horz(CT)	0.00	3	n/a	n/a		
BCDL	10.0	Code IRC2018/TPI2014		Matrix-P							Weight: 8 lb	FT = 20%

LUMBER-
TOP CHORD 2x4 SPF No.2
BOT CHORD 2x4 SPF No.2
WEBS 2x4 SPF No.2

BRACING-
TOP CHORD Structural wood sheathing directly applied or 3-1-14 oc purlins, except end verticals.
BOT CHORD Rigid ceiling directly applied or 10-0-0 oc bracing.

REACTIONS. (size) 1=3-1-6, 3=3-1-6
Max Horz 1=50(LC 9)
Max Uplift 1=-18(LC 12), 3=-31(LC 12)
Max Grav 1=107(LC 1), 3=107(LC 1)

FORCES. (lb) - Max. Comp./Max. Ten. - All forces 250 (lb) or less except when shown.

NOTES-
1) Wind: ASCE 7-16; Vult=115mph (3-second gust) Vasd=91mph; TCDL=6.0psf; BCDL=4.2psf; h=25ft; Cat. II; Exp C; Enclosed; MWFRS (envelope) gable end zone and C-C Exterior(2E) zone; cantilever left and right exposed ; end vertical left and right exposed;C-C for members and forces & MWFRS for reactions shown; Lumber DOL=1.60 plate grip DOL=1.60
2) Gable requires continuous bottom chord bearing.
3) This truss has been designed for a 10.0 psf bottom chord live load nonconcurrent with any other live loads.
4) Provide mechanical connection (by others) of truss to bearing plate capable of withstanding 100 lb uplift at joint(s) 1, 3.
5) This truss is designed in accordance with the 2018 International Residential Code sections R502.11.1 and R802.10.2 and referenced standard ANSI/TPI 1.

STATE OF MISSOURI
XUEGANG LIU
NUMBER E-29713
PROFESSIONAL ENGINEER

July 20,2021

MiTek
16023 Swingley Ridge Rd
Chesterfield, MO 63017

Symbols

PLATE LOCATION AND ORIENTATION

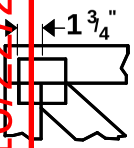

Center plate on joint unless x, y offsets are indicated. Dimensions are in ft-in-sixteenths. Apply plates to both sides of truss and fully embed teeth.

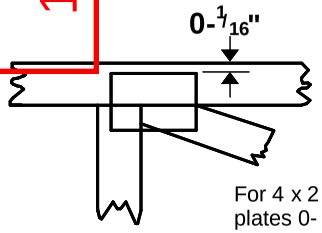

For 4 x 2 orientation, locate plates 0- 1/16" from outside edge of truss.

This symbol indicates the required direction of slots in connector plates.

*** Plate location details available in MiTek 20/20 software or upon request.**

PLATE SIZE

4 x 4

The first dimension is the plate width measured perpendicular to slots. Second dimension is the length parallel to slots.

LATERAL BRACING LOCATION

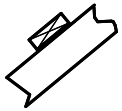

Indicated by symbol shown and/or by text in the bracing section of the output. Use T or I bracing if indicated.

BEARING

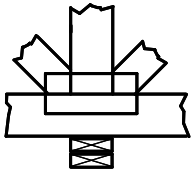

Indicates location where bearings (supports) occur. Icons vary but reaction section indicates joint number where bearings occur. Min size shown is for crushing only.

Industry Standards:

ANSI/TPI1: National Design Specification for Metal Plate Connected Wood Truss Construction.
DSB-89: Design Standard for Bracing.
BCSI: Building Component Safety Information, Guide to Good Practice for Handling, Installing & Bracing of Metal Plate Connected Wood Trusses.

Numbering System

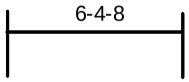

dimensions shown in ft-in-sixteenths
(Drawings not to scale)

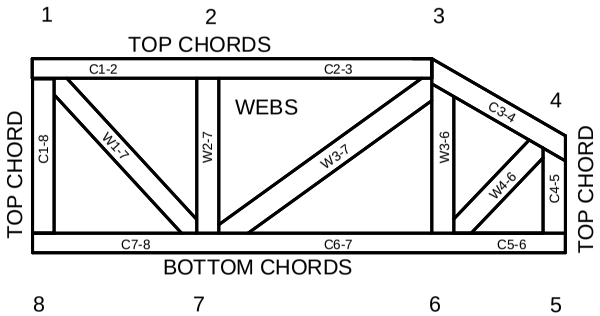

JOINTS ARE GENERALLY NUMBERED/LETTERED CLOCKWISE AROUND THE TRUSS STARTING AT THE JOINT FARTHEST TO THE LEFT.

CHORDS AND WEBS ARE IDENTIFIED BY END JOINT NUMBERS/LETTERS.

PRODUCT CODE APPROVALS

ICC-ES Reports:

ESR-1311, ESR-1352, ESR1988
ER-3907, ESR-2362, ESR-1397, ESR-3282

Trusses are designed for wind loads in the plane of the truss unless otherwise shown.

Lumber design values are in accordance with ANSI/TPI 1 section 6.3 These truss designs rely on lumber values established by others.

MiTek Engineering Reference Sheet: MII-7473 rev. 5/19/2020

General Safety Notes

Failure to Follow Could Cause Property Damage or Personal Injury

1. Additional stability bracing for truss system, e.g. diagonal or X-bracing, is always required. See BCSI.
2. Truss bracing must be designed by an engineer. For wide truss spacing, individual lateral braces themselves may require bracing, or alternative Tor I bracing should be considered.
3. Never exceed the design loading shown and never stack materials on inadequately braced trusses.
4. Provide copies of this truss design to the building designer, erection supervisor, property owner and all other interested parties.
5. Cut members to bear tightly against each other.
6. Place plates on each face of truss at each joint and embed fully. Knots and wane at joint locations are regulated by ANSI/TPI 1.
7. Design assumes trusses will be suitably protected from the environment in accord with ANSI/TPI 1.
8. Unless otherwise noted, moisture content of lumber shall not exceed 19% at time of fabrication.
9. Unless expressly noted, this design is not applicable for use with fire retardant, preservative treated, or green lumber.
10. Camber is a non-structural consideration and is the responsibility of truss fabricator. General practice is to camber for dead load deflection.
11. Plate type, size, orientation and location dimensions indicated are minimum plating requirements.
12. Lumber used shall be of the species and size, and in all respects, equal to or better than that specified.
13. Top chords must be sheathed or purlins provided at spacing indicated on design.
14. Bottom chords require lateral bracing at 10 ft. spacing, or less, if no ceiling is installed, unless otherwise noted.
15. Connections not shown are the responsibility of others.
16. Do not cut or alter truss member or plate without prior approval of an engineer.
17. Install and load vertically unless indicated otherwise.
18. Use of green or treated lumber may pose unacceptable environmental, health or performance risks. Consult with project engineer before use.
19. Review all portions of this design (front, back, words and pictures) before use. Reviewing pictures alone is not sufficient.
20. Design assumes manufacture in accordance with ANSI/TPI 1 Quality Criteria.
21. The design does not take into account any dynamic or other loads other than those expressly stated.