DUTCH BROS COFFEE
NEW FREESTANDING STORE
500 NW CHIPMAN ROAD,
LEE'S SUMMIT, MISSOURI 64086

IMAGE FOR GENERAL ILLUSTRATIVE PURPOSES ONLY - ACTUAL BUILDING DESIGN MAY DIFFER

SYMBOL LEGEND

- SECTION REFERENCE
- DOOR SCHEDULE REFERENCE
- CENTERLINE
- MASTER MATERIAL SCHEDULE REFERENCE
- EQUIPMENT SCHEDULE REFERENCE
- WALL ASSEMBLY TYPE REFERENCE
- ELEVATION MARKER
- ENLARGED DETAIL REFERENCE
- REVISION TAG
- REVISION CLOUD

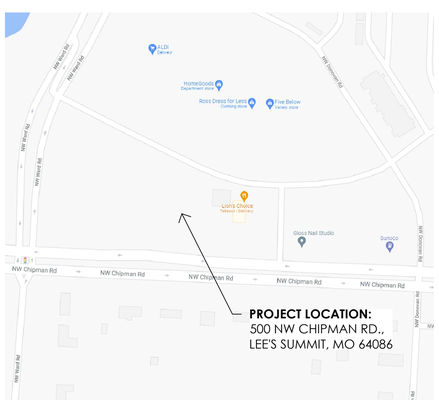

1 VICINITY MAP

NOT TO SCALE

GENERAL REQUIREMENTS:

1. ANY DISCREPANCIES IN DRAWINGS OR SPECIFICATIONS SHALL BE BROUGHT TO THE ATTENTION OF THE DUTCH BROS CONSTRUCTION MANAGER PRIOR TO CONSTRUCTION, AND IF NOT CLARIFIED, THE CONTRACTOR SHALL ASSUME THE MOST STRINGENT REQUIREMENTS INDICATED.

2. THE CONTRACTOR SHALL PROVIDE THE DUTCH BROS CONSTRUCTION MANAGER/ ARCHITECT WITH SCHEDULING INFORMATION PRIOR TO COMMENCEMENT OF CONSTRUCTION, AND WILL UPDATE THE SCHEDULE AS NECESSARY TO REFLECT ANY CHANGES IN ACTIVITIES AND MILESTONES.

3. ALL CONSTRUCTION AND MATERIALS SHALL COMPLY WITH ANY AND ALL APPLICABLE CODES, RULES AND LAWS, AS ADOPTED BY THE AUTHORITY HAVING JURISDICTION. ALL DIMENSIONS SHALL BE FIELD VERIFIED. BEFORE PROCEEDING WITH ANY WORK, THE CONTRACTOR SHALL CAREFULLY CHECK AND VERIFY ALL DIMENSIONS. ANY DISCREPANCIES SHALL BE REPORTED TO THE DUTCH BROS CONSTRUCTION MANAGER/ ARCHITECT.

4. SUBMIT FOR APPROVAL, PRIOR TO FABRICATION OR PURCHASE, SHOP DRAWINGS AND/OR SAMPLES FOR ITEMS AS REQUESTED BY THE CONSTRUCTION MANAGER AND/OR ARCHITECT.

5. UNLESS NOTED, EXISTING CONSTRUCTION, MATERIALS AND FINISHES SHALL REMAIN. ANY DAMAGE DONE TO THESE ITEMS SHALL BE REPAIRED TO THE ORIGINAL CONDITION BY A MEANS APPROVED BY THE OWNER.

6. ALL WORK SHALL BE IN STRICT ACCORDANCE WITH ALL GOVERNMENTAL CODES, LAWS AND REGULATIONS. ALL MATERIAL SHALL MEET FLAME SPREAD AND SMOKE CONTRIBUTION REQUIREMENTS OF THE LOCALLY ADOPTED BUILDING CODE, AND AS NOTED IN THE CONTRACT DOCUMENTS.

7. THE DRAWINGS SHALL SERVE AS WORKING DRAWINGS FOR THE GENERAL LAYOUT OF THE VARIOUS ITEMS OF EQUIPMENT. HOWEVER, LAYOUT OF EQUIPMENT, ACCESSORIES, SPECIALTIES (INCLUDING FURNITURE), AND CONDUIT SYSTEMS ARE DIAGRAMMATIC UNLESS SPECIFICALLY DIMENSIONED. IF ADDITIONAL JUNCTION BOX, PULL-BOX, OR OTHER DEVICES ARE REQUIRED TO COMPLETE AN INSTALLATION, THE CONTRACTOR SHALL NOTIFY THE CONSTRUCTION MANAGER OF THE ADDITIONAL WORK AND COST PRIOR TO PROCEEDING.

8. ALL SHOP DRAWINGS PREPARED BY THE MANUFACTURER MUST BE REVIEWED BY THE CONTRACTOR. THE CONTRACTOR'S STAMP OF APPROVAL AND DATE MUST BE INCLUDED ON ALL SUBMITTED MATERIALS ALONG WITH THE PROJECT NAME. SUBMITTALS NOT CONTAINING THE ABOVE INFORMATION WILL BE RETURNED WITHOUT ACTION. THE REVIEW OF SHOP DRAWINGS DOES NOT RELIEVE THE CONTRACTOR FROM RESPONSIBILITY FOR ERRORS, OMISSIONS OR DEVIATIONS FROM THE CONTRACT DOCUMENTS, UNLESS THEY ARE CALLED OUT IN WRITING AT THE TIME OF SUBMISSION AND WRITTEN ACCEPTANCE. THE ENGINEER IS RESPONSIBLE FOR DETAILS, SIZE OF MEMBERS AND QUANTITIES IN SHOP DRAWINGS, BASED ON INFORMATION PROVIDED ON THE ENGINEERED PLANS; OMISSIONS OF COMPONENTS OR FITTINGS; AND FOR COORDINATING ITEMS WITH ACTUAL BUILDING CONDITIONS AND ADJACENT WORK. ERRORS AND OMISSIONS DISCOVERED AT A LATER TIME WILL BE CONSIDERED NON CONFORMING WORK.

9. THE CONTRACTOR SHALL MAINTAIN ON THE SITE AN UP-TO-DATE COMPLETE "RECORD" SET OF PRINTS WHICH ARE CORRECTED DAILY WITH ALL CHANGES IN LAYOUT FROM THE ORIGINAL DRAWINGS AND SPECIFICATIONS. CONTRACTOR SHALL DELIVER "RECORD" SET TO CONSTRUCTION MANAGER PRIOR TO FINAL PAYMENT. "RECORD" SET SHALL INCLUDE: ONE FULL PERMIT SET AND ONE SET OF CONSTRUCTION REDLINES.

10. CONTRACTOR IS RESPONSIBLE FOR OBTAINING ALL PERMITS AND INSPECTIONS, DUTCH BROS WILL BE RESPONSIBLE FOR FEES PAYMENT. CONTRACTOR SHALL PROVIDE THE OWNER A COPY OF THE BUILDING PERMIT PRIOR TO COMMENCING ANY WORK. CONTRACTOR WILL NOTIFY THE CONSTRUCTION MANAGER/ ARCHITECT OF ALL PERMIT AND CODE INSPECTIONS. CONTRACTOR SHALL BE RESPONSIBLE FOR OF BUILDING PAD CERTIFICATION PER THE JTHORITY HAVING JURISDICTION. CONTRACTOR SHALL BE RESPONSIBLE FOR ALL 3RD PARTY INSPECTIONS/ CERTIFICATIONS IN ORDER TO OBTAIN THE CERTIFICATE OF OCCUPANCY.

11. CONTRACTOR IS RESPONSIBLE FOR THE COORDINATION OF THE WORK OF ALL SUBCONTRACTORS, AND WORK RELATED DIRECTLY TO THE PROJECT BEING PERFORMED UNDER SEPARATE CONTRACT. CONTRACTOR SHALL SUBMIT A LIST OF EACH SUBCONTRACTOR'S NAME, CONTACT, ADDRESS AND TELEPHONE NUMBER AS WELL AS EMERGENCY CONTACT INFORMATION TO CONSTRUCTION MANAGER PRIOR TO BEGINNING CONSTRUCTION.

12. CONTRACTOR SHALL MAKE EVERY EFFORT TO KEEP THE BUILDING AREAS CLEAN AND SAFE DURING THE CONSTRUCTION PERIOD. CONTRACTOR SHALL USE WALK-OFF MATS TO PROTECT FLOORING. CONTRACTOR AND ITS SUBCONTRACTORS SHALL PREVENT NOISE, DUST, SMOKE AND ODORS FROM INTERFERING WITH THE NORMAL OPERATIONS OF NEIGHBORING AREAS, INCLUDING WALKWAYS AND STREETS.
- CONSTRUCTION DEBRIS WILL BE REMOVED FROM THE SITE. THE SITE AREA SHALL BE KEPT CLEAN AND ORGANIZED AT ALL TIMES.
- ALL WALL, FLOOR OR CEILING PENETRATIONS SHALL BE SLEEVED AND ADEQUATELY SEALED TO PREVENT THE SPREAD OF SMOKE, FIRE AND RODENTS PER APPLICABLE CODES. THE CONTRACTOR SHALL PROVIDE TEMPORARY PROTECTION WHEN WORK CANNOT BE COMPLETED IN ONE WORK SHIFT.
- THE CONTRACTOR SHALL PROVIDE AN ADEQUATE NUMBER OF FIRE EXTINGUISHERS IN THE WORK AREA THROUGHOUT THE CONSTRUCTION PERIOD.
- THE CONTRACTOR SHALL NOTIFY THE OWNER 72 HOURS PRIOR TO ANY ELECTRICAL SHUTDOWNS WHICH MAY AFFECT EXISTING TENANTS OR NEIGHBORS.
- THE CONTRACTOR SHALL PROHIBIT SMOKING ON AND WITHIN 25 FEET OF THE BUILDING AREA.

13. CLEAN-UP - THE PROJECT SITE SHALL BE SWEPT UP AND TRASH SHALL BE REMOVED ON A DAILY BASIS. CARE SHALL BE TAKEN TO KEEP ADJACENT OCCUPIED TENANT AREAS CLEAN DURING CONSTRUCTION ON A DAILY BASIS WHERE WORK REQUIRED BY THIS PROJECT DISTURBS ADJACENT AREAS.
- THE CONTRACTOR IS RESPONSIBLE FOR REMOVAL OF CONSTRUCTION DEBRIS. LOCATION OF LARGE DUMPSTERS FOR CONTRACTORS MUST BE APPROVED AND PLACED AS DIRECTED BY THE CONSTRUCTION MANAGER. THE CONTRACTOR WILL OBTAIN THE PERMIT FOR THE DUMPSTER.
- PRIOR TO OCCUPANCY, SPACE SHALL BE LEFT CLEAN OF ALL DEBRIS. WALL AND OTHER SURFACES SHALL BE WIPED DOWN, GLASS WASHED, BLINDS DUSTED, FLOORS SWEPT AND/OR VACUUMED, TILE CLEANED AND WOODWORK CLEANED.
- CONTRACTOR IS RESPONSIBLE FOR DELIVERING THE PREMISES AT COMPLETION IN A "MOVE-IN" CONDITION.
- CONTRACTOR WILL BE REQUIRED TO LEAVE EXTRA MATERIALS IN THE WORKROOM: TWELVE TILES, ONE BOX OF VINYL FACED CEILING TILE, ONE BOX OF QUARRY TILES, MINIMUM 1/2 GALLON OF EACH PAINT AND BASE PAINT USED, TO BE LEFT IN BATHROOM OR MONOLITH ATTIC SPACE.

PROJECT STATISTICS:

SCOPE

NEW CONSTRUCTION FOR DUTCH BROS COFFEE LOCATED AT 500 NW CHIPMAN RD., LEE'S SUMMIT, MISSOURI 64086.
THE BUILDING CONSISTS OF (1) DRIVE-THRU SERVICE WINDOW AND (1) WALK-UP SERVICE WINDOW; NO INDOOR OR OUTDOOR SEATING IS PROVIDED. SITE DEVELOPMENT INCLUDES A SMALL PARKING AREA, (2) DRIVE AISLES, AND A TRASH ENCLOSURE AREA. THE PARCEL IS CURRENTLY VACANT.

PARCEL DATA:

PARCEL ID # 52-900-03-42-00-0-00-000
OVERALL SITE AREA: ±0.828 ACRES
ZONING: PMIX (PLANNED MIXED USE)
CURRENT LAND USE: VACANT COMMERCIAL PROPERTY
PROPOSED LAND USE: COMMERCIAL

CODE SUMMARY:

BUILDING CODE	2018 IBC
MECHANICAL CODE	2018 IMC
PLUMBING CODE	2018 IPC
ENERGY CODE	NOT ADOPTED
FIRE CODE	2018 IFC
ELECTRICAL CODE	2017 NEC
ACCESSIBILITY CODE	ANSI 117.1

BUILDING CONSTRUCTION DATA:

CONSTRUCTION TYPE:	V-B
AUTOMATIC SPRINKLER SYSTEM:	NO
PROPOSED BUILDING HEIGHT:	24'-0"
MAXIMUM ALLOWABLE HEIGHT:	40'-0"
PROPOSED STORIES:	1
MAXIMUM STORIES:	2
BASEMENT:	NO
TOTAL FLOOR AREA:	950 S.F. GROSS
MAXIMUM ALLOWABLE AREA:	9,000 S.F.
FIRE-RESISTANCE RATING FOR STRUCTURAL ELEMENTS: (PER IBC TABLE 601)	0 HOURS

BUILDING OCCUPANCY DATA:

OCCUPANCY CLASSIFICATION: GROUP B (BUSINESS)

GROSS AREA:	950 S.F.
LOAD FACTOR:	1/150
OCCUPANT LOAD:	6.33
TOTAL OCCUPANT LOAD:	7
EXITS: TOTAL EXITS:	1
7 (OCCUPANT LOAD) X .2" / PERSON:	1.40 INCHES
EXIT WIDTH PROVIDED:	40 INCHES
MAXIMUM EXIT ACCESS TRAVEL DISTANCE:	75 FEET
TOILETS: TOTAL NUMBER OF TOILET FACILITIES:	1 PROVIDED

SUBMITTALS BY OTHERS:

EXTERIOR SIGNAGE

SIGN VENDOR SHALL BE RESPONSIBLE FOR PREPARING DRAWINGS AND OBTAINING SEPARATE SIGNAGE PERMITS AS REQUIRED BY LOCAL JURISDICTION.

NOTE: I/ WE UNDERSTAND THAT I/ WE WILL NOT BE AUTHORIZED FOR ANY INSPECTION OF THE DEFERRED ITEMS PROPOSED PRIOR TO THE SUBMITTAL AND APPROVAL OF PLANS AND/ OR CALCULATIONS FOR THOSE DEFERRED ITEMS.

PROJECT DIRECTORY:

OWNER / DEVELOPER

T.M. CROWLEY & ASSOCIATES
501 PENNSYLVANIA PARKWAY, SUITE 160
INDIANAPOLIS, IN 46280
ATTN: ANDREW GLENSKI - DIRECTOR OF CONSTRUCTION
AGLENSKI@TMCROWLEY.COM
(913) 568-1998

TENANT

DUTCH BROS COFFEE
110 SW 4TH STREET
GRANTS PASS, OR 97526

ATTN: DENNIS WILLIAMS, CONSTRUCTION MANAGER
DWILLIAMS@NANSHEPARTNERS.COM
(480) 213-9288

ARCHITECT OF RECORD

CORALIC ARCHITECTURE
A MISSOURI LIMITED LIABILITY COMPANY
9700 MACKENZIE ROAD, SUITE 222,
ST. LOUIS, MO 63123
ATTN: EDIN CORALIC, PRINCIPAL
EDIN@CORALICARCHITECTURE.COM
(314) 578-4953

CIVIL ENGINEER

PREMIER DESIGN GROUP
100 MIDLAND PARK DRIVE
WENTZVILLE, MO, 63385

ATTN: MATT FOGARTY, PRINCIPAL ENGINEER
MFOGARTY@PREMIERCIVIL.COM
(314) 925-7452

STRUCTURAL ENGINEER

KREHER ENGINEERING
208 N. MAIN STREET,
COLUMBIA, IL 62236

ATTN: JIM KREHER
JIMK@KREHERENGINEERING.COM
(618) 281-8505

ELECTRICAL/ MECHANICAL/ PLUMBING ENGINEER

CASE ENGINEERING, INC.
796 MERUS COURT
ST. LOUIS, MO 63026

ATTN: DARRELL CASE, PE
DCASE@CASEENGINEERINGINC.COM
(636) 349-1600

DRAWING INDEX:

REVISION:		1	2	3	4	5
GENERAL INFORMATION:						
G0.0	COVER SHEET					
G0.1	ACCESSIBILITY INDEX					
G1.0	SPECIFICATIONS					
G1.1	SPECIFICATIONS					
G1.2	SPECIFICATONS					
G1.3	SPECIFICATONS					
G1.4	SPECIFICATONS					
G1.5	SPECIFICATONS					
CIVIL:						
C-000	COVER SHEET					
C-001	GENERAL NOTES					
C-100	SITE PLAN					
C-200	GRADING PLAN					
C-300	UTILITY PLAN					
C-400	INITIAL EROSION CONTROL PLAN					
C-401	FINAL EROSION CONTROL PLAN					
C-402	EROSION CONTROL DETAILS					
C-500	STORM SEWER PROFILES					
C-600	CONSTRUCTION DETAILS					
C-601	CONSTRUCTION DETAILS					
C-700	UTILITY DETAILS					
C-800	EXISTING DRAINAGE AREA MAP					
C-801	STORM MANAGEMENT PLAN					
LANDSCAPE:						
L-1	LANDSCAPE PLAN					
SITE PLAN:						
SP1.0	ARCHITECTURAL SITE PLAN					
SP1.1	SITE SIGNAGE DETAILS					
SP1.2	SITE SIGNAGE DETAILS					
SP1.3	BUILDING SIGNAGE DETAILS					
ARCHITECTURAL:						
A1.0	EQUIPMENT/ ENLARGED COOLER/ FIRE LIFE SAFETY PLAN					
A1.1	EQUIPMENT SCHEDULE					
A1.2	IT/ LIGHTING/ PLUMBING/ TABLE SCHEDULES					
A2.0	PARTITION/ FINISH PLAN					
A3.0	REFLECTED CEILING PLAN					
A3.1	AWNING/ CANOPY DETAILS					
A4.0	ROOF PLAN					
A5.0	INTERIOR ELEVATIONS					
A5.1	INTERIOR ELEVATIONS - EQUIPMENT					
A6.0	BUILDING ELEVATIONS					
A7.0	BUILDING SECTIONS					
A7.1	WALL SECTIONS					
A7.2	WALL SECTIONS					
A8.0	BUILDING DETAILS					
A8.1	WINDOW AND DOOR DETAILS					
A9.0	TRASH ENCLOSURE PLAN/ ELEVATIONS					
A9.1	TRASH ENCLOSURE DETAILS					

REVISION:		1	2	3	4	5
STRUCTURAL:						
S1.1	GENERAL NOTES					
S1.2	GENERAL NOTES/ SPECIAL INSPECTIONS					
S1.3	TYPICAL DETAILS					
S1.4	TYPICAL DETAILS					
S1.5	TYPICAL DETAILS					
S2.1	FOUNDATION PLAN					
S2.2	FOUNDATION SECTIONS					
S2.3	ROOF FRAMING					
S2.4	HIGH ROOF PLAN AND DETAILS					
S2.5	ROOF SECTIONS					
ELECTRICAL:						
E0.01	ELECTRICAL SITE/ PHOTOMETRIC PLAN					
E1.01	LIGHTING PLAN					
E2.01	POWER PLAN					
E2.02	SPECIAL SYSTEMS FLOOR PLAN					
E3.01	PANEL SCHEDULES					
E4.01	SPECIFICATIONS					
MECHANICAL:						
M1.0	MECHANICAL PLAN					
M2.0	MECHANICAL DETAILS					
M3.0	MECHANICAL SPECIFICATIONS					
PLUMBING:						
P1.0	PLUMBING SPECIFICATIONS & SCHEDULE					
P2.0	PLUMBING WASTE/ VENT FLOOR PLAN					
P3.0	PLUMBING SUPPLY FLOOR PLAN AND DETAILS					
P4.0	PLUMBING ISOMETRICS					
P5.0	PLUMBING DETAILS					
P6.0	PLUMBING SPECIFICATIONS					

SEE PREFERRED VENDOR LIST ON SHEET G0.1

UTILITY REQUIREMENTS

FULL ELECTRIC DESIGN (NO GAS)	600A, 120/208V, THREE PHASE, 4-WIRE, GROUNDED ELECTRICAL SERVICE
DOMESTIC WATER	3/4" MINIMUM, OR AS REQUIRED PER LOCAL CODE. 50-60 PSI MEASURED AFTER METER.
IRRIGATION WATER	3/4" MINIMUM, OR AS REQUIRED PER LOCAL CODE
SEWER	4" MINIMUM, OR AS REQUIRED PER LOCAL CODE
STORM WATER	AS REQUIRED PER LOCAL CODE
CABLE INTERNET	60 MBPS MINIMUM DOWNLOAD SPEED, 5 MBPS MINIMUM UPLOAD SPEED

ARCHITECT
CORALIC, LLC
EDIN CORALIC
9700 MACKENZIE ROAD, STE. 222,
ST. LOUIS, MO 63123
p: 314.578.4953
e: edin@coralicarchitecture.com

STRUCTURAL ENGINEER
JAMES C. KREHER
JIM KREHER
208 N. MAIN STREET,
COLUMBIA, IL 62236
p: 618.281.8505
jimk@kreherengineering.com

MEP ENGINEER
Case Engineering
DARRELL R. CASE
796 MERUS CT.,
FENTON, MO 63026
T. 636.349.1600 F. 636.349.1730
dcase@caseengineeringinc.com

EDIN CORALIC ARCHITECT
A-2013031004 - EXP. 12-31-2021

STATE OF MISSOURI
EDIN CORALIC
NUMBER A-2013031004
ARCHITECT
10.11.2021

MISSOURI CERTIFICATE OF AUTHORITY NO. 2013041393

Project No: MO0102
Dutch Bros Coffee - New Freestanding Store
500 NW Chipman Road, Lee's Summit, Missouri 64086
for: Dutch Bros Coffee
110 SW 4th St.
Grants Pass, OR 97526

ISSUED FOR PERMIT:
10.11.2021

REV:	DATE:	DESCRIPTION:

SHEET NAME:

COVER SHEET

SHEET NUMBER:

G0.0

© 2020 DB Franchising USA, LLC

RESTROOM DOOR SIGNAGE

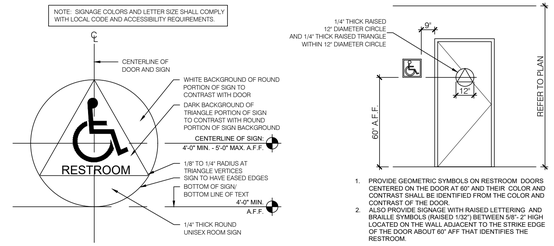

1. PROVIDE GEOMETRIC SYMBOLS ON RESTROOM DOORS CENTERED ON THE DOOR AT 60" AND THEIR COLOR AND CONTRAST SHALL BE IDENTIFIED FROM THE COLOR AND CONTRAST OF THE DOOR.
2. ALSO PROVIDE SIGNAGE WITH RAISED LETTERING AND BRAILLE SYMBOLS (RAISED 1/32") BETWEEN 5/8"- 2" HIGH LOCATED ON THE WALL ADJACENT TO THE STRIKE EDGE OF THE DOOR ABOUT 60" AFF THAT IDENTIFIES THE RESTROOM.

PLUMBING FIXTURES

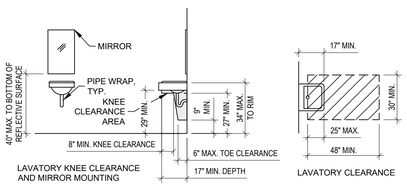

LAVATORY KNEE CLEARANCE AND MIRROR MOUNTING — LAVATORY CLEARANCE

CLEARANCE AT LAVATORIES AND SINKS — ANSI FIGURE C606.2(a) AND FIGURE 306.2

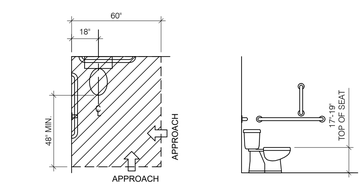

CLEARANCE AT WATER CLOSETS AND HEIGHT — ANSI FIGURE 604.3 AND FIGURE 604.4

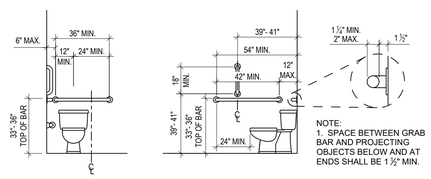

GRAB BARS AT WATER CLOSETS — ANSI FIGURE 604.5.1 AND FIGURE 604.5.2

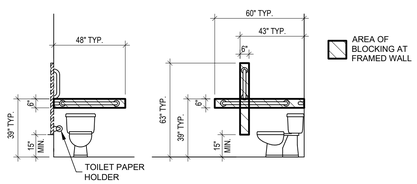

BLOCKING AT WATER CLOSET GRAB BARS

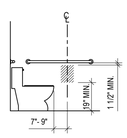

TOILET PAPER DISPENSER OUTLET LOCATION — FIGURE 604.7

MOUNTING HEIGHTS

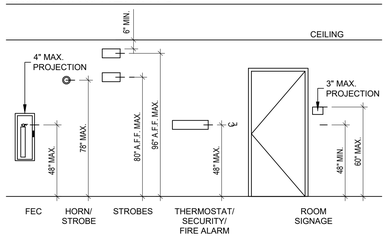

WALL MOUNTED DEVICES AND APPLIANCES

NOTE:
1. WALL MOUNTED DEVICES SHALL NOT EXTEND MORE THAN 4" BEYOND WALL SURFACE WHEN LOCATED BELOW 6'-8"
2. OPERABLE PARTS OF SANITARY NAPKIN DISPENSER SHALL BE OPERABLE WITH ONE HAND AND SHALL NOT REQUIRE TIGHT GRASPING, PINCHING, OR TWISTING OF THE WRIST. THE FORCE REQUIRED TO ACTIVATE OPERABLE PARTS SHALL BE 5 POUNDS MAX.

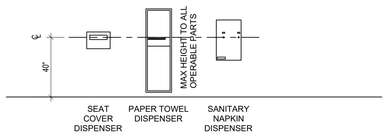

TOILET ROOM ACCESSORY MOUNTING HEIGHTS

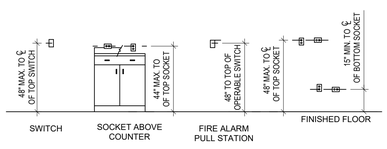

DOORS

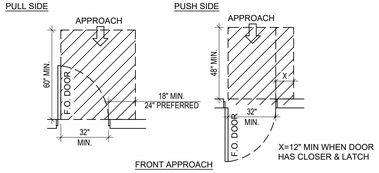

FRONT APPROACH

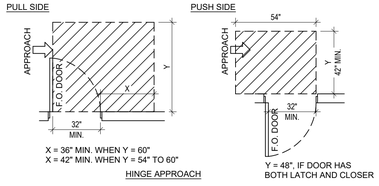

HINGE APPROACH

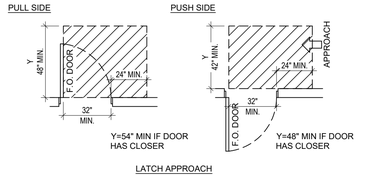

LATCH APPROACH

MANEUVERING CLEARANCES AT SWINGING DOORS — ANSI SECTION 404.2.3

CLEARANCES

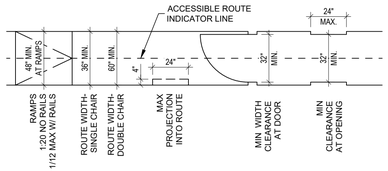

CLEAR WIDTH OF AN ACCESSIBLE ROUTE — ANSI FIGURE 403.5 AND FIGURE C403.5

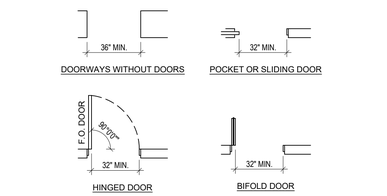

CLEAR WIDTH OF DOORWAYS — ANSI FIGURE 404.2.2

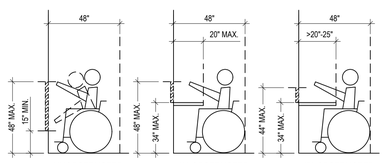

FORWARD REACH REQUIREMENTS — ANSI FIGURE 308.2.1 AND FIGURE 308.2.2

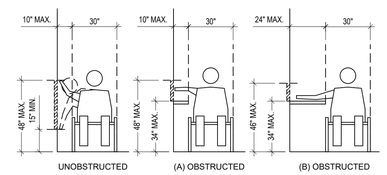

SIDE REACH REQUIREMENTS — ANSI FIGURE 308.3.1 AND FIGURE 308.3.2

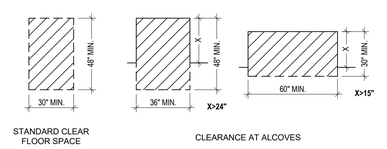

CLEAR FLOOR SPACES — ANSI FIGURE 305.3 AND FIGURE 305.7

LEVEL CHANGE ON ACCESSIBLE ROUTE — ANSI FIGURE 303.2 AND FIGURE 303.3

KITCHEN EQUIPMENT SUPPLIERS

REGION	
CA	CURTIS RESTAURANT EQUIPMENT VARIOUS LOCATIONS ATTN: RYAN MCPHAIL O: (541) 746-7480 M: (541) 817-5362 R.MCPHAIL@CURSTISRESTEQ.COM
AZ, CO, ID, NM, NV, OR, UT WA	AIS INDUSTRIES, INC. 4300 S. STATION MASTER DRIVE TUCSON, AZ 85714 ATTN: LARA GARCIA O: (520) 882-0233 M: (520) 235-1123 LARA@AISINDUSTRIES.COM
OK, TX, KS, MO	CONCEPT SERVICES 12521 AMHERST DRIVE AUSTIN, TX 78727 SAMANTHA GARCIA, MATT BATTEN & BRIAN MORRIS O: (512) 343-3100 ATTN: DBC@CONCEPTSERV.COM

PREFERRED VENDORS

ROOF:	DURO-LAST, INC. 525 MORLEY DRIVE SAGINAW, MI 48601 ATTN: MOLLY GEHRLS, MBA - NATIONAL ACCOUNTS MGEHRLS@DURO-LAST.COM O: (989) 758-6344
SIGNAGE & AWNINGS	ES&A SIGN & AWNING CO. 89975 PRAIRIE RD. EUGENE, OR 97402 ATTN: NICK JOHNSON NJOHNSON@ESASIGNS.COM O: (541) 485-5546 M: (541) 799-5160 SIGNAGE: COORDINATE W/ ARCHITECT FOR ENTITLEMENTS PHASE.
LIGHTING:	IMPERIAL LIGHTING 41905 BOARDWALK, SUITE G PALM DESERT, CA 92211 ATTN:KURT TOMASOVICH - DIRECTOR OF SALES KURT@IMPERIAL-LIGHTING.COM O: (760) 636-0762
	GRAYBAR 4601 CAMBRIDGE ROAD FORT WORTH, TX 76155 ATTN:DAVID (DAVE) ARINGTON - SENIOR SALES REPRESENTATIVE DAVE.ARINGTON@GRAYBAR.COM O: (817) 213-1330
	VILLA LIGHTING SUPPLY 2929 CHOUTEAU AVE. ST. LOUIS, MO 63103 ATTN: NICK BECKER NICK.BECKER@VILLALIGHTING.COM (314) 478-3141
HVAC	NCA CONSULTANTS INC. 6510 125TH AVE. N., SUITE 1001 LARGO FL 33773 ATTN: CHRISTOPHER WITTS - VICE PRESIDENT CWITTS@NCACONSULTANTS.COM (727) 530-0078 ORDERS: MARKETING@NCACONSULTANTS.COM
SERVICE WINDOWS & AIR CURTAINS:	QUIK-SERV 11441 BRITTMOORE PARK DR. HOUSTON, TX 77041 ATTN:BRIAN HANSON BRIAN.HANSON@EASI-SERV.COM O: (800) 388-8307 M: (713) 849-5882
WATER FILTRATION:	HEATHCO/ EVERPURE - R.O SYSTEM 4033 16TH AVENUE SW B SEATTLE, WA 98106 ATTN: TOM RUGGLES TOM@HEATHCO.COM O: (800) 767-6970 M: (206) 910-9805
REFRIGERATION:	THE REFRIGERATION CONTRACTORS INC. 17246 NE SAN RAFAEL ST. PORTLAND, OR 97230 ATTN: GLENN FRAZIER GLENN@REFCONINC.COM (503) 257-8668
FLOOR TILE:	DALTILE 212 UTAH STREET SAN FRANCISCO, CA 94103 ATTN: ANGELA BRABEC - NATIONAL ACCOUNT MANAGER ANGELA.BRABEC@DALTILE.COM O: (415) 830-7955
	BEDROSIANS TILE & STONE ATTN: TAMARA RAMSEY TAMARA.RAMSEY@BEDROSIANS.COM (469) 560-6133 ORDERS: DUTCHBROS@BEDROSIANS.COM
PAINT:	SHERWIN-WILLIAMS 5128 SE WOODSTOCK BLVD PORTLAND, OR 97206 ATTN: DUSTIN BUMGARNER - SALES REPRESENTATIVE (503) 718-4350 DUTCH BROS COFFEE ACCOUNT #: 7887-2870-7
CANOPY SOFFIT MATERIAL:	HEWN ELEMENTS, LLC. 21235 SW 108TH AVE. #13 TUALATIN, OR 97062 ATTN: TOM LEISMAN - SALES REPRESENTATIVE TOM@HEWN.COM O: (503) 612-0241 M: (971) 235-4408
TELECOMMUNICATIONS / LOW VOLTAGE:	LTCG - LEVALDS TECHNICAL COORDINATION GROUP 6860 DALLAS PARKWAY, SUITE 460 PLANO, TX 75024 ATTN:GREGORY LEVALDS - OWNER GREGORY@LTCG.COM (972) 801-9950
	GRANITE TELECOMMUNICATIONS 100 NEWPORT AVENUE EXTENSION QUINCY, MA 02171 ATTN: TYLER BENJAMIN -TEAM LEAD - PREMIER ACCOUNTS TBENJAMIN@GRANITENET.COM O: (617) 837-4698 M: (573) 823-9681

ARCHITECT
CORALIC, LLC
EDIN CORALIC
9700 MACKENZIE ROAD, STE. 222,
ST. LOUIS, MO 63123
p: 314.578.4953
e: edin@coralicarchitecture.com

STRUCTURAL ENGINEER
JAMES C. KREHER
JIM KREHER
208 N. MAIN STREET,
COLUMBIA, IL 62236
p: 618.281.8505
jimk@kreherengineering.com

MEP ENGINEER
Case Engineering
DARRELL R. CASE
796 MERUS CT.,
FENTON, MO 63026
T. 636.349.1600 F. 636.349.1730
dcase@caseengineringinc.com

EDIN CORALIC ARCHITECT
A-2013031004 - EXP. 12-31-2021
STATE OF MISSOURI
EDIN CORALIC
NUMBER A-2013031004
ARCHITECT
10.11.2021
MISSOURI CERTIFICATE OF AUTHORITY NO. 2013041393

Project No: MO0102

Dutch Bros Coffee - New Freestanding Store

500 NW Chipman Road, Lee's Summit, Missouri 64086
for: Dutch Bros Coffee
110 SW 4th St.
Grants Pass, OR 97526

ISSUED FOR PERMIT:
10.11.2021

REV:	DATE:	DESCRIPTION:

SHEET NAME:

ACCESSIBILITY DETAILS

SHEET NUMBER:

G0.1

© 2020 DB Franchising USA, LLC

NOTE: THE FOLLOWING SET OF SPECIFICATIONS IS MEANT TO BE USED AS A GUIDE FOR ALL POSSIBLE AND PROTOTYPICAL INSTANCES, USED IN MANY LOCATIONS IN THE COUNTRY AND ALL MAY NOT APPLY TO THIS PROJECT. REFER TO STRUCTURAL, MEP, CIVIL AND LANDSCAPE SPECIFICATIONS FOR ADDITIONAL NOTES/ SPECS. THOSE SHALL SUPERCEDE SPECS SHOWN IN THESE NEXT FEW PAGES. THE STRICTEST OF ALL SHALL APPLY. CONSULT WITH EOR OR AOR WITH ANY QUESTIONS.

02 DEMOLITION

Furnish labor, material and equipment required for the demolition and removal of existing structures, foundations, slabs, vegetation, and other material as required preparatory to site excavation, construction and grading. Include stripping and stockpiling of topsoil, and erosion control.

CONDITIONS

Existing Conditions: Verify existing conditions at the site and include all work evident by site inspection whether or not shown on the Drawings.

Field Measurements: The layout on the Drawings has been developed from the survey information available to the Architect. Some variation and adjustment may be required on the site layout. Stake the areas to be cleared and obtain the approval of the Architect prior to starting the clearing operation.

Notify the Architect in advance of cutting, alteration or excavation which may affect the structural safety of any portion of the project.

All material and debris resulting from demolition Work shall become property of the Contractor and be removed from the site at Contractor's expense.

EXAMINATION

Inspect the work to determine condition of existing building and amount of existing materials and debris to be removed.

PREPARATION AND COORDINATION

Utilities: Coordinate demolition work with affected utility agencies or electrical and mechanical crafts.

Completely remove all existing utility services which are not a part of new work or designated to remain. Save and protect existing utilities shown to remain. Notify Architect at once if unknown utilities are found in the work.

Laws and Ordinances: Comply with the applicable laws and ordinances governing the disposal of debris on or off the site, and commit no trespass on any public or private property in any operation due to or connected with demolition and site clearing. Decommission buried oil storage tanks in accordance with governing jurisdiction requirements.

Tree Protection:

Use care in preparing the demolition and clearing operation to protect all trees outside the limits required for construction work, or trees designated to remain undisturbed.

Protect all existing plant material to remain against unnecessary cutting, breaking and skinning of roots and branches, skinning and bruising of bark. Engage a Consulting Arborist to remove branches from trees and large shrubs which are to remain, if required, to clear new construction and where indicated, and to direct tree root pruning and relocation work. Consulting Arborist to perform tree repair work damaged by construction operations in a manner acceptable to the Architect. Make repairs promptly after damage occurs to prevent progressing deterioration of damaged trees.

Contractor shall pay the Owner the value of existing trees to remain that died or were damaged because of the Contractor's failure to provide adequate protection and maintenance. Value of existing trees will be determined by a Consulting Arborist in accordance with the evaluation formula set forth in "The Shade Tree Evaluation Guidebook" of the International Society of Arboriculture and American Society of Consulting Arborists.

EROSION CONTROL

Contractor's erosion control responsibilities include but are not limited to:

Conduct all erosion control activities in accordance with all governing jurisdictions including but not limited to city, county, state and federal DEQ requirements.

Design erosion control methods.

Submit to the governing jurisdictions erosion control documents that have been stamped and signed by a civil engineer licensed in the State of Project location.

Obtain erosion control permits and pay permit fees.

Maintain compliant erosion control during construction.

Pay all fines and other penalties levied against the Project for non-compliance of erosion control.

CLEARING AND GRUBBING

Clear the site within the limits shown and remove all remaining brush, stumps and waste material that would interfere with construction operation, except as specifically indicated otherwise on the Drawings.

Remove all roots larger than 1 1/4 inch diameter down to 18 inches below grade in building or paved areas and to 8 inches below finished grades over remaining site areas. Apply an approved herbicide to remaining roots under 1 1/4 inch diameter. Cleared items shall be removed from the site or otherwise disposed of by the Contractor.

General: Demolish indicated existing buildings and site improvements as detailed. Use methods required to complete the Work within limitations of governing regulations and as follows:

Do not use cutting torches until work area is cleared of flammable materials. Maintain fire watch and portable fire-suppression devices during flame-cutting operations.

Maintain adequate ventilation when using cutting torches.

Locate building demolition equipment and remove debris and materials so as not to imposeexcessive loads on supporting walls, floors, or framing.

Site Access and Temporary Controls: Conduct building demolition and debris-removal operations to ensure minimum interference with roads, streets, walks, and other adjacent occupied and used facilities.

Do not close or obstruct streets, walks, or other adjacent occupied or used facilities without permission from Owner and authorities having jurisdiction. Provide alternate routes around closed or obstructed traffic ways if required by authorities having jurisdiction.

Use water mist and other suitable methods to limit spread of dust and dirt. Comply with governing environmental-protection regulations. Do not use water when it may damage adjacent construction or create hazardous or objectionable conditions, such as ice, flooding, and pollution.

DISPOSAL OF DEMOLISHED MATERIALS

Remove demolished materials from Project site and legally dispose of them in an EPA-approved landfill.

Do not allow demolished materials to accumulate on-site.

Remove and transport debris in a manner that will prevent spillage on adjacent surfaces and areas.

Burning: Do not burn demolished materials.

HAZARDOUS MATERIAL REMOVAL

If during the course of the demolition work, the Contractor observes or suspects the existence of hazardous material in the building, the Contractor shall immediately stop work in that area and promptly notify the Owner and the Architect. The Owner will consult with the Architect regarding removal and encapsulation of the hazardous material which will be performed under a separate contract between the Owner and an Environmental Health Science Consultant.

Do not perform any work pertinent to the hazardous material prior to the receipt of special instructions from the Owner.

REPAIR AND REPLACEMENT

Repair or replace all sidewalks, streets, and curbs damaged by the Work of the Project as required by the governing jurisdiction.

BARRIERS, SAFETY GUARDS, & WARNING LIGHTS:

Provide where necessary for Public, Neighboring Property and Adjacent Spaces protection.

Topsoil:

Cut existing grass and weeds; dispose of off site.

Existing grass not longer than 3 inches and sod may be included if cut up and well distributed in the topsoil; no sticks, rocks and large roots.

Strip 12 inches deep below existing grade from existing site areas wherever site is to be excavated or graded, from areas to be covered by pavements, and strip topsoil completely everywhere within building lines.

Strip topsoil from remainder of site as required to obtain additional topsoil for redistribution at depths indicated. Depths of stripping as approved by Architect. Stripping is generally limited to those areas requiring excavation and fill areas exceeding 12 inch depths. Areas scheduled to receive only topsoil fill do not require stripping of topsoil except as required to obtain ample topsoil for redistribution.

Stockpiling:

Stockpile topsoil required for redistribution, kept separate from other excavated material, at locations on site acceptable to the Architect. If redistribution is possible immediately after stripping operation, stockpiling is not required.

Protect and maintain stockpiles until topsoil is needed for redistribu~tion in designated areas. Grade surface of stockpiles remaining over winter months to prevent ponding of water. Compact top 1 foot of stockpile or cover to minimize the infiltration of water.

DEMOLITION PREPARATION

Existing Utilities: Locate, identify, disconnect, and seal or cap off indicated utilities serving buildings and structures to be demolished.

Arrange to shut off indicated utilities with utility companies.

If utility services are required to be removed, relocated, or abandoned, before proceeding with building demolition provide temporary utilities that bypass buildings and structures to be demolished and that maintain continuity of service to other buildings and structures.

Cut off pipe or conduit a minimum of 24-inches below grade. Cap, valve, or plug and seal remaining portion of pipe or conduit after bypassing.

Temporary Shoring: Provide and maintain interior and exterior shoring, bracing, or structural support to preserve stability and prevent unexpected movement or collapse of construction being demolished. Strengthen or add new supports when required during progress of demolition.

DEMOLITION PROTECTION

Existing Facilities: Protect adjacent walks, building entries, and other building facilities during demolition operations.

Existing Items to Remain: Protect construction indicated to remain against damage and soiling during demolition. When permitted by Architect, items may be removed to a suitable, protected storage location during demolition and cleaned and reinstalled in their original locations after demolition operations are complete.

Existing Utilities: Maintain utility services indicated to remain and protect them against damage during demolition operations.

Do not interrupt existing utilities serving adjacent occupied or operating facilities unless authorized in writing by Owner and authorities having jurisdiction.

Provide temporary services during interruptions to existing utilities, as acceptable to Owner and to authorities having jurisdiction.

Temporary Protection: Erect temporary protection, such as walks, fences, and railings, where required by authorities having jurisdiction and as indicated.

Protect existing site improvements, appurtenances, and landscaping to remain.

Erect a plainly visible fence around drip line of individual trees or around perimeter drip line of groups of trees to remain.

Provide temporary barricades and other protection required to prevent injury to people and damage to adjacent buildings and facilities to remain.

Provide protection to ensure safe passage of people around building demolition area and to and from occupied portions of adjacent buildings and structures.

Protect walls, windows, roofs, and other adjacent exterior construction that are to remain and that are exposed to building demolition operations.

Erect and maintain dustproof partitions and temporary enclosures to limit dust and dirt migration and to separate areas from fumes and noise from occupied portions of adjacent buildings.

DEMOLITION, GENERAL

03 CONCRETE

CONCRETE FORMWORK

WOOD PLANK FORMS
Material: Lumber - Species: Douglas Fir or Hemlock
Moisture Content: Contractor's choice
Casting Face Texture: Smooth
Casting Face Appearance: No loose Knots or Knot Holes; maximum Knot size 1-1/2 inch and well scattered.
Size: Support Concrete at rate poured
Provide at Footing and Flatwork perimeters, unless otherwise indicated.
PLYWOOD FORMS
At Vertical Concrete Exposed to View:
Type: 1-step Medium Density Overlayid
APA Grade: EXT-MDO
Surface Finish: Matte
At all other Vertical Concrete:
APA Grade: B-B Plyform
Class: 1
Thickness: As required by Concrete placement rate
FORM TREATMENT MATERIALS
Clean Water Nox-Crete "Pre-Form," or approved.
EMBEDDED ITEMS
Anchor Bolts: Furnished by Steel Fabricators and Equipment Suppliers.
Vapor Barrier Sheet: ASTM E1745 Class A (threshold puncture resistance no less than 2,200 grams per ASTM D1709), and permeance no greater than 0.020 U.S. Perms per ASTM E96. Vapor barrier sheet shall maintain permeance no greater than 0.020 U.S. Perms after conditioning tests per ASTM E154 Sections 8, 11 12 and 13.
Product: Stego Industries 15 mil "Stego Wrap Vapor Barrier" and "Stego Wrap Tape," 877/223-4333. Polyethylene

INSTALLATION
Construct forms according to the recommended practices as outlined in ACI "form work for concrete," special publication no. 4, and ACI 347.
Conform to shapes, lines, and dimensions shown on Drawings.
Brace and tie together to ensure that position and shape are maintained.
Make tight to prevent Concrete leakage.
Arrange Joints as indicated or directed.
VAPOR BARRIER
General: Provide when required by governing jurisdiction.
Vapor Barrier: Install in accordance with ASTM E1643. Verify that compacted underslab base fill is in place, then cover with vapor barrier sheet, lapping edges 6-inches minimum and taping all seams with vapor barrier tape. Use vapor barrier sheet to boot around all penetrations and seal with tape to create a continuous vapor barrier. Tape and seal edge of vapor barrier to foundation walls. Sand or other granular fill prohibited above vapor barrier.

CONCRETE REINFORCING

SHOP & PLACEMENT DRAWINGS
Follow ACI 315 Detailing Manual, published by American Concrete Institute
Submit toTO Owner & Architect for Review
REINFORCEMENT BARS
Material: Steel
Manufacturing Standard: ASTM A-615
Grade: 60, unless otherwise shown on Drawings.
Sizes & Locations: See Drawings
INSTALLATION
General: Conform to International Building Code (IBC) 1907 & ACI 318.
Bending:
Bend Bars without heat.
Field bending partially embedded Bars, not permitted
Placing:
Secure against displacement.
Extend Wire Mesh to within 1/2 inches of Concrete edges. Support Mesh with Chairs.
Spacing:
Conform to Code paragraph 1907.6
Clear distance between parallel Bars, including splices not less than:
Nominal Bar diameter
1-1/2 times maximum Concrete Aggregate size
1 inch
Splicing:
Do not weld or tack-weld Reinforcement Splices.
Minimum Lap at Splices:
At Tensile Bar Reinforcement: 48 Bar diameters
At Compressive Bar Reinforcement: 48 Bar diameters
At Wire Mesh: Lap one full mesh, plus 2 inches.
ALLOWABLE PLACEMENT VARIATION FROM DRAWING DIMENSIONS
Concrete Cover: Plus or minus 1/4 inch
Spacing between Bars: 1/4 inch

CAST IN PLACE CONCRETE

WEATHER REQUIREMENTS
General: Follow Standard Specification for Cold & Warm Weather Concreting, ACI 306 & 305
PORTLAND CEMENT
Type: I-II
Manufacturer: Use only one for all exposed Concrete.
AGGREGATE
Maximum Size: ¾ inch.
FLY ASH
Fly ash: Conform to ASTM C618, including Table 24, Class: F
May be used at Contractor's option to replace up to 20% of cement content, provided the mix design strength is substantiated by test data.
ENTRAINED AIR
Mixture (in percentage of Concrete Volume): ASTM C260.
At Interior Concrete Flatwork: 2% to 4%

WATER REDUCING ADMIXTURES
Type: A, ASTM C494
Material: All concrete shall contain a Type A admixture in the basic design with dosages high enough to reduce water by at least 10% from the same mix without the admixture. This admixture shall produce no retardation.

FINISHING AID FOR HOT WEATHER PLACEMENT:
Specially formulated material to be sprayed on fresh concrete to prevent rapid drying during hot and windy weather. Sprayed over plastic concrete, finishing aid produces a monomolecular film that reduces evaporation to improve workability of concrete until the next finishing operation. Product contains a yellow fluorescent color tint to easily identify the areas covered.
Products:
"Confilm" by Master Builders.
"Day 1 Finishing Aid" by Solomon Colors.
PROHIBITED ADMIXTURES
Calcium Chloride, Thyocyanates, and any others containing more than 0.05% Chloride Ions.
BONDING AGENT
At Dry Surfaces: Euclid Euco Weld, Sonneborn Sonocrete, or approved.
At Damp Surfaces: Euclid Euco Epoxy 452 MV or 620, Sika Sikadur Hi-Mod, or approved.
NON-SHRINK GROUT
Manufacturer & Brand: Euclid Euco-NS, L&M Crystx, Sonneborn Sonogrout, or approved.
Minimum 28 day Compressive Strength: 5000 psi
Extent of Work: Under Column Base Plates and Elsewhere shown on Drawings.

FLOOR FILLER
Manufacturer & Brand: Dowman Fix-All, Euclid Euco-Speed, Webtex Webpatch, Sonneborn Sonopatch, or approved.
Provide over Concrete Flatwork which is too rough or too untrue to provide satisfactory Base to receive Finish Flooring.
CURING COMPOUNDS
At Interior Flatwork: ASTM C309, Type 1.
Type: Clear, colorless, water-base, VOC-compliant, and acceptable to Covering Contractor.
Manufacturer: Sonneborn, Meadows, or approved.

FREEZE-THAW PROTECTION SEALER
Manufacturer & Brand: L & M, Aquapel or approved.
Type: Penetrating, water-based, VOC-compliant, non-yellowing, non-gloss, and odorless.
Provide over exposed surfaces of Concrete to prevent freeze-thaw damage to Concrete caused by Salts, Deicer Chemicals, and other Contaminates.

MIXING CONCRETE
General: Readymix type conforming to ASTM C-94.
Assume responsibility for Mix design and Product performance.
Design Strength:
Minimum Density: 145 pcf, plus or minus 5%
Minimum 28 day compressive strengths, locations, and minimum Cement content as follows:
At 3000 psi Concrete; 5-1/2 sacks per cu. yd.
Design is for 2500 psi: No special inspection required
Verify Notes on Structural Drawings: Contradiction follow Structural Notes
Maximum Water-Cement Ratios:
Where Air-entrained: 0.45
Where not Air-entrained: 0.50
Maximum Slump:
4 inches (plus or minus 1 inch) at any time is maximum
CONSOLIDATING CONCRETE
Employ mechanical, high-frequency Vibrators to consolidate Concrete around Reinforcement, into corners and angles of Forms, and to exclude rock pockets, air bubbles, and honeycomb. Hold Vibrator in one spot no longer than 15 seconds; keep in constant motion, insert and withdraw at points approximately 18 inches o.c.
VOIDS & GRAVEL POCKETS
Repair where necessary and where directed by Owner's Representative.
Satisfactory repair of Concrete is virtually impossible, therefore take all necessary precautions to assure that repairs are unnecessary. If imperfections are sufficiently objectionable, replace Work in question when directed.
CONCRETE FLATWORK FINISHES
Required Preparation Work:
Screed all Flatwork to true levels or slopes.
Prior to finishing Concrete, remove any accumulated Bleed Water.
Evenly slope to any Drain at 3/16 inch per ft., unless otherwise shown on Drawings.
Smooth-floated Finish:
Finish Flatwork as smooth as possible without troweling.
Extent of Work: Provide at Concrete Flatwork to receive tile

ALLOWABLE FLATWORK TOLERANCES
All Surfaces: True within 1/4 inch per 10 ft.

04 MASONRY, MORTARS, AND GROUTS

HARDENED MORTAR COLOR SAMPLES
Submit Samples for approval
Required Quantity: 2
Minimum Face Size: 12x12 inches
PORTLAND CEMENT
Type: I-II
Manufacturer & Brand: Contractor's choice; use only one brand at exposed Work.
LIME
Manufacturing Standard: ASTM C-207
Type: S hydrated
Manufacturer & Brand: Contractor's choice; use one Brand only at exposed Work.
AGGREGATE
Material: Sand
Manufacturing Standard:
For Mortar: ASTM C-144
For Grout: ASTM C-404
MORTAR COLOR
Material: Pure inorganic Mineral Oxide
Manufacturer & Brand: Sonneborn Sonobrite, or approved.
Type: Harmless to Mortar strength and set, and stable at high temperatures.
Color: See Schedule on Drawings, or match masonry color
Provide in all exposed Mortar.
WATERPROOFING ADMIXTURE
Manufacturer & Brand: WR Grace Dry Block, or approved.
ACCELERATOR
Manufacturer & Brand: Sonneborn Trimix, Anti-Hydro, or approved.
RETARDANT
Manufacturer & Brand: Sika Plastiment, Protex, or approved.
MORTAR & GROUT
Minimum 28 Day Compressive Strengths:
Unit Masonry Mortar: 1800 psi.
Masonry Grout: 2000 psi.
RETEMPERING
Use Mortar and Grout only within 2 hours after initial mixing.
Discard unused Mortar and Grout 2 hours after initial mixing.

UNIT MASONRY

REFERENCES
- American Society for Testing and Materials (ASTM).
- Brick Institute of America (BIA), Technical Notes on Brick Construction.
- Building Code Requirements and Specifications for Masonry Structures (ACI 530-11 and ACI 530.1-11).

QUALITY ASSURANCE
Masonry veneer anchorage shall comply with provision of Chapter 6 of ACI 530/ASCE 5/TMS 402.
Source Limitations for Masonry Units: Obtain exposed masonry units of a uniform texture and color blend within the ranges accepted for these characteristics, from single source manufacturer for each product required.
Source Limitations for Mortar Materials: Obtain mortar ingredients of a uniform quality, including color for exposed masonry, from single manufacturer for each cementitious component and from single source or producer for each aggregate.
Mock Ups: Build sample unit masonry wall approximately 4 foot by 6 foot size showing bond, jointing, mortar color, and blending of the color range of units as applicable. Approval required before ordering unit masonry and proceeding with masonry wall work.
SAMPLES
Prior to starting work submit 2 full size samples of Masonry Units for approval.
Show texture and full color range.
BRICK
Mutual Materials 'Westport'
Durability Grade: ASTM C216 or ASTM C652, FBS Type SW. Provide brick "solids" where detailed and as required where wide face is exposed.

Size: 2 x 4 x 8 inches
Face Texture: Wire Cut and tumbled
Color: See Color Schedule on Drawings.
Extent of Work: Veneer on exterior

CONCRETE BLOCK
Manufacturer: Willamette Graystone
At Exterior Walls:
Type: Hollow-core and load-bearing
Manufacturing Standard: ASTM C90-90, Type 1, modified as follows:
Class: Normal Weight
Maximum Fly Ash Content, if used: 22% of combined Cement and Fly Ash weight.
Minimum Compressive Strength f'm: 1500 psi
Minimum Dry Density: 125 lbs. per cubic ft.
Maximum Absorption: 10 lbs. per cubic ft.
Integral moisture resistant additive, amount as recommended by additive manufacturer.
Exposed Chips: Unacceptable
Moisture Resistant Additive Manufacturers:
W.R. Grace "Dry Block."
Master Builders "Rheomix Rheopel."
Nominal Size: 8X4X16 and 8x8x16 inches, unless shown otherwise on Drawings.
Face Texture: Manufacturer's standard as listed on Exterior Materials Schedule.
Split Face, Standard Face
Color: Manufacturer's standard or as indicated in Exterior Materials Schedule
Required Special Shapes:
12 x 2 x 16 inches, solid wall cap
Bond Beam Units
Any other shown on Drawings
Color: Manufacturer's standard, see Exterior Materials Schedule

REINFORCING BARS
Masonry Joint Reinforcement for Single-Wythe Masonry: Either ladder or truss type with single pair of side rods, ASTM A951.
Exterior Walls: Hot-dip galvanized, carbon steel, Grade 60.
Wire Size for Side Rods: 0.148-inch diameter (9 ga.).
Wire Size for Cross Rods: 0.148-inch diameter (9 ga.).
Spacing of Cross Rods, Tabs, and Cross Ties: Not more than 16 inches o.c.
Provide in lengths of not less than 10 feet.
Extent of Work: Furnish and install all required for Unit Masonry Work.
VENEER ANCHORS
Manufacturer & Brand: Contractor's choice
Material: Steel with Hot-dip Galvanized Coating
Type: Permitting vertical and horizontal differential movement between Masonry Facing and Backup Support, and complying with IBC Sect.1405.5. Steel adjustable ties, 3/16 inch diameter wire by the length necessary to anchor in mortar joint a minimum of 2-inches. 1/4 inch diameter wire ties required for cavity space 2-inches or more between back face of brick and structural support.
Seismic Reinforcing: Where required by Code for seismic loading, Hohmann & Barnard Seismiclip Interlock System, and ASTM A641 Class 3 mill galvanized continuous 0.148 inch diameter wire (W1.7) at each anchor location.

SILL FLASHING
Manufacturer: MortarNet, (800) 664-6638, or approved.
Brand: TotalFlash

ARCHITECT
CORALIC, LLC
EDIN CORALIC
9700 MACKENZIE ROAD, STE. 222,
ST. LOUIS, MO 63123
p: 314.578.4953
e: edin@coralicarchitecture.com

STRUCTURAL ENGINEER
JAMES C. KREHER
JIM KREHER
208 N. MAIN STREET,
COLUMBIA, IL 62236
p: 618.281.8505
jimk@kreherengineering.com

MEP ENGINEER
Case Engineering
DARRELL R. CASE
796 MERUS CT.,
FENTON, MO 63026
T. 636.349.1600 F. 636.349.1730
dcase@caseengineeringinc.com

EDIN CORALIC ARCHITECT
A-2013031004 - EXP. 12-31-2021

STATE OF MISSOURI
EDIN CORALIC
NUMBER A-2013031004
ARCHITECT
10.11.2021

MISSOURI CERTIFICATE OF AUTHORITY NO. 2013041393

Project No: MO0102

Dutch Bros Coffee - New Freestanding Store

500 NW Chipman Road, Lee's Summit, Missouri 64086
for: Dutch Bros Coffee
110 SW 4th St.
Grants Pass, OR 97526

ISSUED FOR PERMIT:
10.11.2021

REV:	DATE:	DESCRIPTION:

SHEET NAME:

SPECIFICATIONS

SHEET NUMBER:

G1.0

©2020 DB Franchising USA, LLC

Components: Factory-assembled flexible flashing, termination bar, vertical edge-dam, clog-preventing drainage matte & weep tabs, stainless steel drip-edge, corner pieces, fasteners, adhesive, and other items required for complete and waterproof assembly.
Extent of Work: Provide at Veneer Wall Sills.

MASONRY INSTALLATION
General:
Do not install cracked, broken, or chipped Masonry Units.
Use Masonry Saws to cut and fit exposed Units.
Lay Units plumb, true to line, and with level courses accurately spaced within allowable tolerances.
Do not furrow Bed Joints.
Stop horizontal runs by racking back in each course; toothing not permitted.
Adjust Units to final position while Mortar is soft and plastic.
Laying Exposed Brick:
Layout:
Unless otherwise shown on Drawings, select and arrange Brick Units to achieve uniform appearance, including randomly and evenly distributing Units without discernible repeating patterns or accumulations of same colors.
Refer to Drawings for masonry bonding patterns.
Make Joints uniform and approximately 3/8 inch wide.
Flashing: Build in all flashing required to waterproof wall and to join with adjacent work.
Brick Anchors:
Provide approved anchors in compliance with Governing Code and not less than one per each 2 s.f. of wall area and at not over 32-inches o.c. horizontal and 18-inches o.c. vertical spacing. At vertical expansion and isolation joints and at openings larger than 16" in the shortest direction: provide additional anchors along each edge at 36" o.c. max. and 12" max. from edges. Install anchors in second course above and below ledger angles.
Ties shall slope down and out not over 10 degrees from horizontal, to divert water to outside, be of proper size for each installation and kept 5/8 inch minimum back of exposed masonry face:
At all Horizontal Joints: Compress with Round Tool to produce concave Mortar shape.
At all Vertical Joints: Compress with Round Tool to produce concave Mortar shape.
Lintels: Install hot dip galvanized structural steel or precast reinforced brick masonry lintels over all openings. Build to details on Drawings. Minimum 4-inches bearing at each end for structural steel.
Bond Beam Lintels for Concrete Block Openings:
Provide Bond Beam at first course above Opening.
Reinforce as shown on Drawings; fill Beam Core with Masonry Grout.
Provide not less than 8 inch Bond Beam bearing on each side of Opening.
Building In and Setting Other Work: Locate accurately by dimension or template built in anchors, accessories, and work of other trades where installed in or supported by masonry. Fill hollow metal frames with mortar or grout where built into masonry.
Expansion Joints: Lay up 1/2 inch wide continuous vertical joints, plumb and true as detailed. Do not exceed 20-feet o.c. at exterior locations to divide large wall areas. Provide joints within (2) masonry unit lengths at (1) side of each wall corner. Do not continue horizontal joint reinforcement through expansion joints, nor will saw cutting of expansion joints be permitted. Minimum number of expansion joints shall be as required by the BIA's Technical Notes on Brick Construction, whether or not shown on the Drawings.
ALLOWABLE INSTALLATION TOLERANCES
Construct Masonry Work true within 1/8 inch per 10 ft.
Accurately size Masonry Openings within 1/4 inch, plus or minus.
Align exposed faces of unit masonry.
CLEANING
Remove excess mortar and mortar smears.
Replace defective mortar. Match adjacent work.
Clean soiled surfaces with cleaning solution. Use non metallic tools in cleaning operations.

05 **MISCELLANEOUS FABRICATED STEEL**
SHOP DRAWINGS
Submit for Miscellaneous Fabricated Steel:
Show locations, critical dimensions, required clearances, construction details, installation methods including any splices, attachments, and anchors.
QUALIFICATIONS
Fabricator, Erector and Welder to be qualified with not less than 5 years experience and able to performed in accordance with AWS D1.1 Standards.
STEEL SHAPES
ALL STEEL SHAPES, BARS, & PLATES
Manufacturing Standard: ASTM A-36 or A-572
Minimum Yield Strength: 36 ksi
STEEL PIPE
Manufacturing Standard: ASTM A-53
Type: Where Exposed to View: S, Concealed from View: E
Grade: B
STEEL TUBING & HOLLOW STEEL SECTIONS (HSS)
For Structural Uses:
Manufacturing Standard: ASTM A-500
Grade: B
Minimum Yield Strength: 46 ksi
For Non-structural Uses:
Manufacturing Standard: ASTM A-501
Minimum Yield Strength: 36 ksi
STANDARD STRENGTH THREADED FASTENERS
Manufacturing Standard:
Bolts & Nuts: ASTM A 307, Grade A
Washers: ANSI Standard B 27
Size & Spacing: See Drawings
Finish: Manufacturer's standard.

Extent of Work: Provide for all Work, except where High-Strength Threaded fasteners are required.
ANCHOR BOLTS
Manufacturing Standard ASTM F-1554
Grade: 36
MISCELLANEOUS ITEMS
Custom Steel Fence: Square tube posts, top and bottom rails, tube size as detailed, 10 gauge 2" square, welded wire mesh infill, all surfaces powder coat finish, Dutch Bros Gray.
Provide all other Steel Items shown on Drawings not classed as Structural Steel.
SHOP PAINT
Primer: compatible with Powder Coating
FABRICATION
General:
Punch and shear to leave clean Surfaces.
Weld permanent Connections; grind exposed Welds smooth.
Cut abutting Members to fit with full bearing contact.
Form Elbows and Bends to uniform radii, free of buckles and twists, finished Surfaces smooth.
Miter and cope intersections within 2 degrees, fit to within 0.02 inches, and weld all around.
Where exposed to weather, form to exclude water; allow for expansion and contraction.
Do not use Screws or Bolts when they can be avoided; when used countersink Heads, draw up tight, and nick Threads to prevent loosening.
Fabricate: (See Drawings)
Trash enclosure gates and posts
Custom steel fence
SHOP TREATMENT
Surface Preparation:
Remove Grease, Oil, Dirt, loose Rust, loose Mill Scale, and any other bond-reducing Materials.

06 **WOOD, PLASTICS AND COMPOSITES**
ROUGH CARPENTRY
FRAMING LUMBER - GENERAL
Species: Where Pressure-preservative Treated: WWP No. 2 S4S Douglas fir, shall be pressure treated with ammoniacal copper quaternary (ACQ) or copper azole (CA) in accordance with AWPA Standard U1, minimum Use Category UC2. All pressure treated lumber shall bear the AWPA Use Category quality mark. Lumber marked "treatment to point of refusal" is not acceptable. Elsewhere: Douglas Fir
Finish: Surfaced 4 sides
Sizes & Shapes: Standard nominal dimensions. Western Wood Products Association (WWPA) Standards designation:
Beams: No. 1 & free of Heart Center (FOHC)
Joists & Rafters: No. 2
Wall Studs up to 10 ft. Long:
2x4 inch & Smaller: No. 2
2x6 inch & Larger: No. 2
Wall Studs Longer than 10 ft.: No. 2
Stud Wall Plates: No. 2
Furring, Blocking, Curbing, & Bracing: No. 2.
Maximum Moisture content when installed in Project:
Douglas Fir: 19%
Hemlock, if any: 17%

PLYWOOD GENERAL
U.S.Product Standard 1: APA Grades, unless otherwise specified elsewhere:
Exposed Surfaces: A-D
Elsewhere: C-D
Types, unless otherwise specified elsewhere:
Where exposed to Moisture: Exterior.
Elsewhere: Exposure 1
Allowable added Urea-Formaldehyde Resins: None
Wall Sheathing and Roof Sheathing: Structural Use panels of all veneer construction, Group 1, APA Rated Sheathing, Exposure 1, C D, thickness as detailed, span rating to match support spacing.
Roof Deck Sheathing: 5/8" plywood sheathing
Plywood for Equipment Boards: 3/4-inch thick APA Group 1, C-D, UL FR-S label.
Glue Laminated Beams:
Lumber for laminating shall meet the Structural Requirements of Laminating Specifications, Voluntary Product Standard PS56, for Structural Glue Laminated Timber, and AITC 117. Stress Grades of beams to provide glue laminated members with allowable values as detailed. All members fabricated with waterproof adhesive, camber as noted, and in conformance with ANSI A190.1.
Beams in concealed spaces shall be Industrial Appearance Classification. Exposed beams and surfaces shall be Architectural Appearance Classification with voids filled with clear wood inserts or neutral colored filler.
End seal all members and protect in transit and against weather and construction stains by individually wrapping each member. Protect and clean all exposed surfaces scheduled for transparent finish.
Mark beams with AITC or APA Quality mark in a location that will not interfere with a transparent finish.
Coordinate with Drawing Notes that take precedence over this Section
ENGINEERED LUMBER
Laminated Veneer Lumber (LVL): RedBuilt RedLam, Weyerhaeuser iLevel Microlam, Rosburg RigidRim or approved.
Laminated Strand Lumber (LSL): Weyerhaeuser iLevel Timberstrand, or approved.
Parallel Strand Lumber (PSL): Weyerhaeuser iLevel Parallam, or approved.
Lumber Manufacturing Standard: ICC ES Report ESR-2993
Adhesive Manufacturing Standard: ASTM D-2559
Size: See Drawings
Store trusses flat, off of ground, and adequately supported to prevent lateral bending.
Protect trusses from weather by covering with waterproof sheeting, securely anchored.
Provide for air circulation around stacks and under coverings.
DIMENSION LUMBER
Lumber: Provide lumber graded by an agency certified by the ALSC Board of Review to inspect and grade lumber under the rules indicated.
Factory mark each piece of lumber with grade stamp of grading agency.
For exposed lumber indicated to receive a stained or natural finish, omit grade stamp and provide certificates of grade compliance issued by grading agency.
Provide dressed lumber, S4S.
Provide dry lumber with 15 percent maximum moisture content at time of dressing.
Grade and Species: Provide visually graded dimension lumber for truss chord and web members, of not less than the following grade:
Grade for Chord Members: Select Structural No. 1.
Grade for Web Members: No. 2
Minimum Chord Size For Roof Trusses: [2 by 6 inches nominal (38 by 140 mm actual) for both top and bottom chords.
METAL CONNECTOR PLATES
General: Fabricate connector plates to comply with TPI 1.
Hot-Dip Galvanized Steel Sheet: ASTM A 653/A 653M; Structural Steel (SS), high-strength low-alloy steel Type A (HSLAS Type A), or high-strength low-alloy steel Type B (HSLAS Type B); G60 (Z180) coating designation; and not less than 0.036 inch (0.9 mm) thick.
INSTALLATION GENERAL
Install Proprietary Products in accordance with Manufacturer's instructions.
Use additional Fasteners to those specified herein where necessary to insure rigidity and permanence.
Provide Washers under Nuts and Heads when making Bolted or Lag Screwed connections.
Drive Nails perpendicular to grain in lieu of toe-nailing where feasible.
Accurately locate, cut, fit, and install Work secure, rigid, to true lines, plumb, and level, unless otherwise indicated.

ERECTION
Follow Manufacturer's instructions and approved Shop Drawings.
Hoist Joists and wood trusses with non-marring Slings attached to designated Lifting Points.
Prevent excessive out-of-plane bending.
Accurately locate and install Joists and wood trusses plumb, secure, and rigid with adjacent Flange Members in true alignment.
Provide necessary Hangers, Anchors, Bearing Plates, Bridging, and Bracing required to resist temporary and permanent vertical and lateral loads as defined in Building Code and on Drawings.

FINISH CARPENTRY
PLYWOOD APA grade trademarked "Medium Density Overlay (MDO)," thickness as detailed for Restroom ceilings, paint finish.
EXTERIOR SOFFIT
Manufacturer: Hewn Elements
Product: Natural Northwestern Spruce, factory pre-stained, color as selected by Architect.
Profile: board size and milled edge as detailed
FIBERGLASS-REINFORCED PLASTIC (FRP) PANELS
PANELS
Manufacturer: Crane Composites [formally Kemlite], Panolam Industries FRP or approved.
Brand: Similar to Crane Glasbord Varietex
Material: Fiberglass-reinforced Plastic (FRP)
ASTM E-84 Fire Rating Class: C
Size: Full Height, no horizontal seams
Surface Texture: Smooth
Color: See Color Schedule on Drawings.
TRIM PIECES
Type: Recommended by Panel Manufacturer for conditions of use
Color: Match adjacent Panels.
Extent of Work: Provide at Panel edges.
PRIMERS & ADHESIVES
Manufacturer & Brand: Contractor's choice
Type: Mildew-resistant, satisfying conditions of use, and permitting removal of Panels without Substrate damage.
FASTENERS
Manufacturer: Contractor's choice
Type: Concealed and satisfying conditions of use.

MANUFACTURED STONE VENEER MASONRY – SIDING SCHEDULE ALTERNATE
Furnish all labor, material, and equipment required for the installation of portland cement based manufactured stone veneer and trim.
SUBMITTALS
Product Data and manufacturer's printed installation instructions.
Samples:
Standard sample board consisting of small-scale pieces of veneer units showing full range of textures and colors.
Full range of mortar colors.
Verification Samples: Following initial sample selection submit "laid-up" sample board using the selected stone and mortar materials and showing the full range of colors expected in the finished Work; minimum sample size: 3 by 3 feet (1 by 1 m).
MATERIALS
Stone Veneer: Eldorado Stone, LLC, 800- 925-1491 Website: www.eldoradostone.com
Profile: Include matching corner pieces.
Color: As shown on Drawings.
Texture: As selected by Architect. .
Veneer Unit properties: Precast veneer units consisting of portland cement, lightweight aggregates, and mineral oxide pigments.
Compressive Strength: ASTM C 192 and ASTM C 39, 5 sample average: greater than 1,800 psi (12.4MPa).
Shear Bond: ASTM C 482: 50 psi (345kPa), minimum.
Freeze-Thaw Test: ASTM C 67: Less than 3 percent weight loss and no disintegration.
Thermal Resistance: ASTM C 177: 0.473 at 1.387 inches thick
Weight per square foot: ASTM C1670, 15 pounds, saturated.
Reinforcing: ASTM C 847, 2.5lb/yd2 (1.4kg/m2) galvanized expanded metal lath complying with code agency requirements for the type of substrate over which stone veneer is installed.
Mortar:
Cement: Portland cement complying with ASTM C 1329.
Lime: ASTM C 207.
Sand: ASTM C 144, natural or manufactured sand.
Color Pigment: ASTM C 979, mineral oxide pigments.
Water: Potable.
Pre-Packaged Latex-Portland Cement Mortar: ANSI A118.4.
Bonding Agent: Exterior surface applied bonding agent meeting ASTM C 932.
Water Repellent: Water based silane or siloxane masonry water repellent.
MORTAR MIXES
Standard Installation (Grouted Joints):
Mix mortar in accordance with ASTM C 270.
Polymer modified mortar complying with ANSI A118.4.
Add color pigment in grout joint mortar in accordance with pigment manufacturer's instructions not to exceed 10% by weight of cement.
Moisture Resistant Additive Manufacturers:
W.R. Grace "Dry Block."
Master Builders "Rheomix Rheopel."
INSTALLATION
Install and clean stone in accordance with manufacturer's installation instructions for Standard Installation (Grouted Joint) as specified above.
CLEANING
Remove protective coverings from adjacent work.
Cleaning Veneer Units:
Wash with soft bristle brush and water/granulated detergent solution.
Rinse immediately with clean water.
Removing Efflorescence:
Allow veneer to dry thoroughly.
Scrub with soft bristle brush and clean water.
Rinse immediately with clean water; allow to dry.
If efflorescence is still visible, contact ES Customer Service for assistance.
Within 8 hours of Surface Preparation, apply the following:
Powder Coat Paint Finish: All surfaces powder coated, Tiger Drylac "Tiger Series 75 Fluoropolymer," AAMA 621, custom color and gloss as selected by Architect.
Coating includes substrate pretreatment, primer, and top coat in accordance with coating manufacturer's application specifications.

MISCELLANEOUS FABRICATED STEEL INSTALLATION
General:
Follow Manufacturers' instructions and approved Shop Drawings.
Install to true lines, plumb and level, and as detailed or required for rigidity and permanence.
Secure to Substrate.
Touch up damaged Paint Surfaces with matching Paint. Apply in accordance with Paint Manufacturer's instructions.

FRAMING CONNECTORS
Manufacturer: Simpson, K.C. Metals, USP, or approved
FASTENERS
Provide all necessary for installation of Work specified herein.
Sizes and quantities noted in Building Code.
ADHESIVE
Manufacturer & Brand: Contractor's choice
Type: Water-based with 15 grams/liter maximum VOC's
EXTERIOR WALL SHEATHING PAPER
Manufacturer: VaproShield, Fortifiber, Tyvek or approved.
Material: Breathable, high-density 3-ply Polypropylene Fabric
xtent of Work: Cover Exterior Wall Sheathing.
SILL SEALER
Manufacturer: Owens-Corning Sill Sealer, or approved.
Material: Fiberglass
Thickness: 1 inch
Width: Match Sill Plate
Provide under any Wood Plates bearing directly on concrete.

SHOP-FABRICATED WOOD TRUSSES
Structural Performance: Provide metal-plate-connected wood trusses capable of withstanding design loads within limits and under conditions indicated. Comply with requirements in Truss Plate Institute, Inc (TPI) 1 unless more stringent requirements are specified below.
Design Loads: As indicated on Drawings
Maximum Deflection Under Design Loads:
Roof Trusses: Vertical deflection of 1/360 of span.
SUBMITTALS
Shop Drawings: Prepared by or under the supervision of a qualified professional engineer licensed in the State of the Project location. Show fabrication and installation details for trusses.
For installed products indicated to comply with design loads, include structural analysis data signed and sealed by the qualified professional engineer responsible for their preparation.
Product Certificates: For metal-plate-connected wood trusses, signed by officer of truss fabricating firm.
Qualification Data: For metal-plate manufacturer, professional engineer, fabricator, and Installer,
Material Certificates: For dimension lumber specified to comply with minimum allowable unit stresses. Indicate species and grade selected for each use and design values approved by the ALSC Board of Review.
QUALITY ASSURANCE
Metal Connector-Plate Manufacturer Qualifications: A manufacturer that is a member of TPI and that complies with quality-control procedures in TPI 1 for manufacture of connector plates.
Manufacturer's responsibilities include providing professional engineering services needed to assume engineering responsibility.
Engineering Responsibility: Preparation of Shop Drawings and comprehensive engineering analysis by a qualified professional engineer.
Fabricator Qualifications: Shop that participates in a recognized quality-assurance program that complies with quality-control procedures in TPI 1 and that involves third-party inspection by an independent testing and inspecting agency acceptable to Architect and authorities having jurisdiction.
Source Limitations for Connector Plates: Obtain metal connector plates from a single manufacturer.
Comply with applicable requirements and recommendations of the following publications:
TPI 1, "National Design Standard for Metal Plate Connected Wood Truss Construction."
TPI DSB, "Recommended Design Specification for Temporary Bracing of Metal Plate Connected Wood Trusses."
TPI HIB, "Commentary and Recommendations for Handling, Installing & Bracing Metal Plate Connected Wood Trusses."
Wood Structural Design Standard: Comply with applicable requirements in AF&PA's "National Design Specifications for Wood Construction" and its "Supplement."
DELIVERY, STORAGE, AND HANDLING
Handle and store trusses to comply with recommendations of TPI HIB, "Commentary and Recommendations for Handling, Installing & Bracing Metal Plate Connected Wood Trusses."

DUTCH BROS
CORALIC ARCHITECTURE
ARCHITECT
CORALIC, LLC
EDIN CORALIC
9700 MACKENZIE ROAD, STE. 222,
ST. LOUIS, MO 63123
p: 314.578.4953
e: edin@coralicarchitecture.com
STRUCTURAL ENGINEER
JAMES C. KREHER
JIM KREHER
208 N. MAIN STREET,
COLUMBIA, IL 62236
p: 618.281.8505
jimk@kreherengineering.com
MEP ENGINEER
Case Engineering
DARRELL R. CASE
796 MERUS CT.,
FENTON, MO 63026
T. 636.349.1600 F. 636.349.1730
dcase@caseengineeringinc.com
EDIN CORALIC ARCHITECT
A-2013031004 - EXP. 12-31-2021
STATE OF MISSOURI
EDIN CORALIC
NUMBER A-2013031004
ARCHITECT
10.11.2021
MISSOURI CERTIFICATE OF AUTHORITY NO. 2013041393

Project No: MO0102
Dutch Bros Coffee - New Freestanding Store
500 NW Chipman Road, Lee's Summit, Missouri 64086
for: Dutch Bros Coffee
110 SW 4th St.
Grants Pass, OR 97526

ISSUED FOR PERMIT:
10.11.2021

REV:	DATE:	DESCRIPTION:

SHEET NAME:
SPECIFICATIONS

SHEET NUMBER:
G1.1

© 2020 DB Franchising USA, LLC

07 THERMAL AND MOISTURE PROTECTION

THERMAL INSULATION

AIR-INFILTRATION SPRAY-FOAM SEALANT
Manufacturer & Brand: Contractor's choice
Minimum ASTM E-96 Water Vapor Permeance:
Dry Cup: 2 perms
Wet Cup: 30 perm
ASTM C-719 Durability over more than 10 cycles: Co cohesive-failure or cracking
Maximum ASTM E-84 Flame Spread: 25
Maximum ASTM E-84 Smoke Developed: 450
MINERAL FIBER BATT INSULATION
Manufacturer: Certainteed, Johns Manville, Knauf, Owens/Corning, US Gypsum, or approved.
Material: Formaldehyde-free Glass Fiber
Manufacturing Standard: ASTM C-665
Type: Friction-fit Blanket or Batt
Minimum Post-consumer Recycled Content: 20%
Minimum Post-industrial Recycled Content: 5%
Minimum Total Recycled Content: 30%
Vapor Retarding Facing:
Material: Material: White Vinyl
Manufacturer & Brand: Contractor's choice.
Approximate Permeability Rating: 0.0 perms
Extent of Work: Provide Insulation of the following minimum Thermal Resistance Factor (R) in the following locations:
At bottom of roof framing: R = 30 (verify with local requirements as minimum)
Within Exterior Frame Walls: R = 21 (verify with local requirements as minimum)
TIE WIRE
Material: 18 ga. Steel
AIR BAFFLES
Manufacturer & Brand: Contractor's choice
Material: Formed Plastic, Metal, or Cardboard
Size: Full-width of Rafter spaces.
Provide where necessary to prevent batt ~~Loose Fill~~ Insulation from being displaced or infiltrated by Ventilation Air.
ADHESIVE
Type: Recommended by Manufacturer of Material to be secured.
MECHANICAL FASTENERS
At Batt Type Insulation:
Type: Staples or Nails recommended by Manufacturer of Material to be secured.
Material: Electroplated Steel
Length: Penetrate Substrate at least 1/2 inch.
Perimeter Foundation and Under Slab Insulation:
Expanded polystyrene insulation board, R 15. 3 inch minimum thickness, nominal density of 2.0 lb./ cu. ft., HFC-free.
Conform to ASTM C578, Type IX. Minimum compressive strength 25 psi., R-5 per inch thickness.
Manufacturer: Insulfoam "Insulgrade IX."
Anchors, Spindle Type, Adhesively Attached:
Plate welded to projecting spindle; capable of holding insulation, of thickness indicated, securely in position with self locking washer in place.
Plate: Perforated galvanized low carbon steel sheet, 0.106 inch thick x 2 inches square.
Spindle: Copper coated or galvanized low carbon steel, fully annealed, 0.105 inch in diameter (12 gauge).
Washers: Galvanized steel, 1-1/2-inch diameter self-locking.
Manufacturers:
AGM Industries "TACTOO Insul Hangers" and "RC 150 Round Self-Locking Washers."
Gemco "Insulation Hangers," spindle type hangers and "R-150 Round Self-LockinWashers."
Spindle Adhesive:
Product with demonstrated capability to bond insulation anchors securely to substrates indicated without damaging insulation, fasteners, and substrates. Verify compatibility with weather resistant barrier.
Manufacturers:
AGM Industries "TACTOO GPA-72 Adhesive," 404.5 g/l VOC.
Gemco "Tuff Bond Hanger Adhesive," 404.5 g/l VOC.
Foundation Insulation Adhesive: Dow "Great Stuff Pro Wall and Floor Adhesive."
INSULATION INSTALLATION, GENERAL
Follow Manufacturer's instructions and Referenced Specifications.
Fit Insulation snugly between Framing without forcing.
Doors, Windows, or other Openings occurring in Framing, pack Insulation into Voids.
Where adjacent pieces of Insulation abut, fit snugly together without overlapping.
Permit no gaps for Air passage.
Carefully cut and fit Insulation around Pipes, Conduits, and other Obstructions.
Do not compress Insulation more than 10%.
Install rigid insulation to foundation wall areas with mastic adhesive as recommended by the manufacturer or with spindle type anchors at approximately 2 foot to 3 foot centers.
Foam-Plastic Board Insulation Under Concrete: Install rigid insulation as detailed and secure in-place as recommended by insulation manufacturer to prevent movement during concrete placement. Tape joints, factory edges and cut edges.
WEATHER RESISTANT BARRIERS
WRB-1, Weather Resistant Barrier Spunbonded polyolefin, non-woven, non-perforated, weather barrier DuPont™ Tyvek® CommercialWrap® and related assembly components.
ACCESSORIES
Seam Tape: 3 inch wide, DuPont™ Tyvek® Tape for commercial applications.
Fasteners: Tyvek® Wrap Caps, as distributed by DuPont: #4 nails with large 1-inch plastic cap fasteners, or 1-inch plastic cap staples with leg length sufficient to achieve a minimum penetration of 5/8-inch into the wood stud.
Adhesives: Provide adhesive recommended by weather barrier manufacturer.
Products:
Liquid Nails® LN-109.
Denso Butyl Liquid.
3M High Strength 90.
Primers: Provide flashing manufacturer recommended primer to assist in adhesion between substrate and flashing.
Products:
3M High Strength 90.
Denso Butyl Spray.
Permagrip 105.
Sam-1 Self-Adhering Membrane flashing: Tremco Exoair 111, 20 mils of high-performance butyl laminated to 4 mils of metalized high density polypropylene film and a siliconized release liner.
Penetration Flashing: Quickflash Weatherproofing Products, Inc., preformed flashing suitable for penetration type.
SAM-2, Self-Adhering, High-Temperature Flexible Flashing: W.R. Grace & Co. "Ultra," Minimum 30 mils thick, consisting of slip-resisting polyethylene-film top surface laminated to layer of butyl adhesive, with release-paper backing; cold applied. Provide primer when recommended by flashing manufacturer. Use in conjunction with TPO or PVC roofing membrane.
Bedding Sealant: Dow Corning 795 Silicone Building Sealant.
INSTALLATION
Install weather barrier over exterior face of exterior wall substrate in accordance with manufacturer recommendations. Install weather barrier prior to installation of windows and doors.
Connect and seal exterior wall WRB continuously to roofing membrane air barrier, concrete below-grade structures, exterior glazing and window systems, glazed storefront systems, through-wall flashings at rainscreens, exterior louvers, exterior door framing, and other construction used in exterior wall openings using auxiliary materials.
Weather Barrier Attachment: Attach weather barrier to studs through exterior sheathing. Secure using weather barrier manufacturer recommended fasteners, space 12 -18 inches vertically on center along stud line, and 24 inch on center, maximum horizontally. Number of fasteners may be reduced by attachment of cladding anchors.
Apply 4 inch by 7 inch piece of SAM-1 or weather barrier manufacturer approved alternate to weather barrier membrane prior to the installation cladding anchors.
OPENING PREPARATION FOR USE WITH NON-FLANGED WINDOWS
Flush cut weather barrier at edge of sheathing around full perimeter of opening.
Cut a head flap at 45-degree angle in the weather barrier at window head to expose 8 inches of sheathing.
Temporarily secure weather barrier flap away from sheathing with tape.
FLASHING FOR USE WITH NON-FLANGED WINDOWS
Cut 9-inch wide SAM-1 a minimum of 12 inches longer than width of sill rough opening. Apply primer as required by manufacturer.
Cover horizontal sill by aligning SAM-1edge with inside edge of sill. Adhere to rough opening across sill and up jambs a minimum of 6 inches. Secure flashing tightly into corners by working in along the sill before adhering up the jambs.
Fan SAM-1 at bottom corners onto face of wall. Firmly press in place. Mechanically fasten fanned edges.
Apply 9-inch wide strips of SAM-1 at jambs. Align flashing with interior edge of jamb framing. Start SAM-1 at head of opening and lap sill flashing down to the sill.
Spray-apply primer to top 6 inches of jambs and exposed sheathing.
Install SAM-1 at opening head using same installation procedures used at sill. Overlap jamb flashing a minimum of 2 inches.
Coordinate flashing with window installation.
On exterior, install backer-rod in joint between window frame and flashed rough framing. Apply sealant at jambs and head, leaving sill unsealed. Apply sealants in accordance with sealant manufacturer's instructions and ASTM C 1193.
Position weather barrier head flap across head flashing. Adhere using 4-inch wide SAM-1 over the 45-degree seams.
Tape top of window in accordance with manufacturer recommendations.
On interior, install backer rod in joint between frame of window and flashed rough framing. Apply sealant around entire window to create air seal. Apply sealant in accordance with sealant manufacturer's instructions and ASTM C 1193.
BUILDING TRANSITION CONDITIONS
Tie-in to floor slabs, parapet curbs, foundation walls, through-wall flashings at rainscreen construction, roofing systems, and at the interface of dissimilar materials with SAM transition and flashing membranes.
Use high temperature SAM-2 under metal copings and other high temperature exposures.
Align and position SAM transition and flashing membrane, remove protective film and press firmly into place. Provide minimum 3 inch lap on to substrates.
Ensure minimum 3 inch overlap at side and end laps of membrane.
WRB PENETRATIONS
Install appropriate Quickflash preformed penetration flashings in accordance with flashing manufacturer's printed installation instructions.

METAL WALL PANELS AND ALTERNATES

Material: Coil-coated Steel
Metal Thickness: 24 ga.
Length: Full-length, single-piece.
Manufacturer: Firestone
Profile: Delta CFP-16f, angle corrugated panel, 16" coverage, 0.81" deep

Installation: Concealed fastener, Vertical and Horizontal, see drawings for use of Type
Finish: Baked fluoropolymer coating with 70% PVDF in resin conforming to the requirements of AAMA 2605, color as selected by Architect from manufacturer's full color range
See Exterior Materials Schedule on Drawings.
Extent of Work: Type where shown on drawings
FLASHING
Material: Match adjacent Panels
JOINT SEALANT
Manufacturer & Type: Recommended by Panel Manufacturer
Color to match adjacent Panel
FASTENERS
Length: Penetrate Wood Framing as recommended by Manufacturer.
Material: Fasteners Penetrating Weather Resistant Barrier, Type 304 stainless steel screws.
Type: Concealed fasteners as indicated on Drawings
ELECTROLYTIC PROTECTION
Treat Contacting Surfaces of Dissimilar Materials to prevent Corrosion.
General:
Follow Manufacturer's instructions
Include all labor, material and equipment necessary and incidental to furnishing and installing preformed metal panels. Include all flashings, closures, fasteners, sealants, and accessories required for complete watertight installation.
Provide additional Struts, Stiffeners, Girts, etc. required to securely support Panels.
Do not stretch or compress Side-lap Interlocks.
Secure Panels flat and square to Support Members without warp or deflection.
Use sufficient Fasteners to assure rigid and permanent installation.
Examine alignment of building components adjoining this material to assure accurate and secure installation. Use care to prevent "Joint Build Up" error. Furnish panels in exact length required to avoid field cutting.

Siding Panels:
Vertical Installation: Place Corrugations vertical; lap self-locking top corrugation away from Prevailing Winds.
Horizontal Installation: Place corrugations horizontal; lap self-locking top corrugation down to shed water shingle style.
FIBER CEMENT SIDING – SIDING SCHEDULE ALTERNATE
SCOPE: Exterior, panelized fiber cement cladding system and accessories to complete a drained and back-ventilated rainscreen.
PRE-INSTALLATION MEETINGS: Prior to beginning installation, conduct conference to verify and discuss substrate conditions, manufacturer's installation instructions, warranty requirements, and project requirements.
MANUFACTURER, PRODUCT: Nichiha USA, Inc. "Nichiha VintageWood." Complies . with ASTM C-1186, Type A, Grade II
Profile colors: Bark, Cedar, Redwood, Ash, and Spruce as selected by Architect.
Profiles: Wood plank texture with three, 3/8" grooves running lengthwise, spaced 5-5/8" apart.
Accessory/Component Options:
Outside Corners: Manufactured Corners with 3-1/2" returns for each profile color.
Inside Corners: Manufacturer's standard closure.
Finish: Bark, Cedar, Clear Anodized, or Primed as selected by architect.
Essential Flashing System: Starter, Overhang.
Finish: Matte black.
Dimensions:
AWP-1818: 455mm (17-7/8") (h) x 1,818 mm (71-9/16") (l).
AWP-3030: 455mm (17-7/8") (h) x 3,030 mm (119-5/16") (l).
Panel Thickness: 16 mm (5/8").
Factory sealed on six [6] sides.
MATERIALS
Fiber cement panels manufactured from a pressed, stamped, and autoclaved mix of Portland cement, fly ash, silica, recycled rejects, and wood fiber bundles.
Panel surface pre-finished and machine applied. Panels profiled along 3030mm edges so that the long joints between the installed panels are ship-lapped.
Factory-applied sealant gasket added to top panel edge; all 3030mm edge joints contain a factory sealant.
INSTALLATION COMPONENTS
Ultimate Clip System:
Starter Track:
Horizontal Panel Installations - FA 700 – 3,030mm (l) galvalume coated steel.
Vertical Panel Installations (AWP-3030 only) – FA 710T – 3,030mm (l) galvalume coated steel.
Panel Clips: JEL 778 "Ultimate Clip II" (10mm rainscreen for 16mm AWP) – Zinc-Aluminum-Magnesium alloy coated steel.
Joint Tab Attachments (included) – used at all AWP-1818 panel to panel vertical joints, NOT used with AWP-3030 installations.
Corner Clips: JE 777C (10mm rainscreen for 5/8" AWP Manufactured Corners) -- Zinc-Aluminum-Magnesium alloy coated steel.
Single Flange Sealant Backer – FHK 1015 R (10mm) – 6.5' (l) fluorine coated galvalume.
Double Flange Sealant Backer – FH 1015 R (10mm) – 10' (l) fluorine coated galvalume.
Corrugated Spacer – FS 1005 (5mm), FS 1010 (10mm) – 4' (l).
Aluminum Trim: No exposed aluminum trim.
Essential Flashing System:
Starter – main segments (3,030mm), inside corners, outside corners
Overhang – main segments (3,030mm), inside corners, outside corners, joint clips
Fasteners: Corrosion resistant fasteners, such as hot-dipped galvanized screws appropriate to local building codes and practices must be used. Use Stainless Steel fasteners in high humidity and high-moisture regions, or penetrate the weather resistant barrier. See manufacturer's instructions for appropriate fasteners for construction method used.
Flashing: Flash all areas specified in manufacturer's instructions. Do not use raw aluminum flashing. Flashing must be galvanized, anodized, or PVC coated.
Sealant: Sealant shall comply with ASTM C920, Class 35.
Furring: 5/8-inch APA Exterior rated plywood, width as detailed, spaced no more than 16" oc, pressure preservative treated.
Insect Screen: Polyester coated glass fiber, color black.
INSTALLATION
General: Install products in accordance with the latest installation guidelines of the manufacturer and all applicable building codes and other laws, rules, regulations and ordinances. Review all manufacturer installation, maintenance instructions, and other applicable documents before installation.
Vertical Control/Expansion Joints are required with AWP-1818, for walls wider than 30 feet, within 2-12 feet of outside corners finished with metal trim and approximately every 30 feet thereafter.

SINGLE PLY ROOFING

PRE-INSTALLATION MEETING
Prior to starting work. Roofer shall arrange meeting to clarify any questions about Specifications, details, and other application requirements.
SUBMITTALS
Submit Roofing Manufacturer's Certificate of Roofing Applicator Approval.
At least 2 weeks prior to Roofing, submit 1 electronic copy of each of the following:
Roofing Manufacturer's applicable Installation Specifications
Roofing Contractor's Layout Drawings as follows:
Include Roof outline, Splice locations, Penetrations, and Edge details.
Include Membrane Manufacturer's approval of Drawings.
Immediately following Work completion submit to Owner's Representative and Project Manager Certification that Manufacturer's Representative has inspected Work prior to, during, and after Work completion, and that Work complies with these Specifications and Manufacturer's instructions.
Submit the following to General Contractor for inclusion in Owner's Maintenance Manual:
Roofing Maintenance Warranty as specified below
Roofing Maintenance Instructions

CRICKET FORMING BOARD
Material: Polyisocyanurate Insulation Board, or approved.
Manufacturer: Contractor's choice
Minimum Density: 1-1/2 pcf
Shape: Tapered 1/2 inch per ft., minimum.
Extent of Work: Provide where necessary to form Roof Slope Crickets.
INSULATION STOPS
Material: Solid Softwood Lumber
Thickness: Match Insulation
Minimum Width: 1 ½ inches
Preservation Treatment: PA C-2 using Water-borne Preservatives
ROOF INSULATION
Manufacturer & Brand: Contractor's Choice
Insulating Material: Polyisocyanurate Foam
Type: HCFC-free with zero Ozone-depletion
Manufacturing Standard: ASTM C-1289, Type II, Class 1
Minimum Compressive Strength: 20 psi (Grade 2)
Facing Material: Coated Fiberglass
Top Surface Shape: Tapered
Average Long Term Thermal Resistance (LTTR): R-value as noted on the Drawings.
COVER BOARD
G-P Gypsum Corporation "Dens-Deck Prime with Eonic Technology Roof Board", moisture resistant, 1/2-inch thick, 48-inches wide, 96-inches long, fire resistance rating (UL 790 and ASTM E108), Class A.
ROOFING MEMBRANE
Manufacturer: Firestone
Material: UltraPly TPO
Minimum UL 790 Fire-resistiveness Class: A
Thickness: 60 mi;
Color: White
FLASHING MEMBRANE
Material & Thickness: Recommended by Roofing Membrane Manufacturer for conditions of use.
Color: Match Roofing Membrane
VAPOR RETARDER
Compatible with Roofing manufacturer
ADHESIVE, CEMENT, MASTIC, & SEALANT
Furnished by Membrane Manufacturer.

INSULATION AND COVER BOARD INSTALLATION
General:
Apply in dry condition in accordance with Manufacturer's instructions. and Regulatory Agency requirements.
Apply in 2 or more layers to specified overall thickness.
Stagger Joints between adjacent Insulation layers and cover board at least 8 inches.
Maximum Open Space between adjacent Insulation Sheets: 1/8 inch
Position long sides of Insulation Sheets with Continuous Joints. Stagger adjacent Transverse Joints.
Neatly cut and fit Insulation at Roof Edges and at any Vertical Projections through Insulation. Fill Open Spaces with Edge Expansion Strips.
Miter Insulation at any Ridges.
Do not damage Insulation or cover board edges or faces during installation.
MEMBRANE INSTALLATION
Follow Manufacturer's instructions using Mechanically Attached method.
Overlap adjacent Sheets at least 3 inches for splicing.
Remove any Wrinkles or Air Pockets.
Secure Membrane as instructed by Membrane Manufacturer.
Make Seams and Penetrations watertight.
Check Seam sealing for continuity and integrity.

SHEET METAL FLASHING AND TRIM

GALVANIZED STEEL SHEETS
Metal Manufacturing Standards: ASTM A-653
Quality: Lock-forming
Pattern: Smooth without texture
Minimum Galvanizing Coating Designation: G-90
Minimum Metal Thickness: Specified below
Factory-applied Finish where exposed to Ground Level View:
Baked Fluoropolymer with 70% minimum PVDF in resin content per AAMA 621.
Minimum Dry Film Thickness: 1 mil
Color: See Exterior Finish Schedule on Drawings.
STAINLESS STEEL SHEETS
Manufacturing Standard: ASTM A-167
Type: 304
Temper: Soft, fully annealed.
Finish: 2D, dull.
Pattern: Flat without texture
REGLETS
Manufacturer: Contractor's choice
Type: Shown on Drawings, unless otherwise required by conditions of use.
Material: 24 ga. Galvanized Steel
Finish: Factory-paint or field-paint to match adjacent Sheetmetal Flashing color.
Accessories: Provide all necessary including Factory-formed Corners and Joint Connectors.
Provide where shown on Drawings and elsewhere necessary for Flashing installation.
SEALANT
Manufacturer & Brand: Dow 999-A, GE Silicone II, Mameco Vulkem 116, Ruscoe Permanent Sealer, Sonneborn NP-1, Tremco Gutter Seal, or approved.
PRIME COATING & UNDERCOATING
Material: For Galvanized Steel: Galvanized Primer specified in Section 09 FINISHES
ASPHALT COATING COMPOUND
Manufacturing Standard: Fed. Spec. TT-C-494
Type: II
FABRICATION
General: Sheet Metal Fabrication Standard: Fabricate sheet metal flashing and trim to comply with recommendations of SMACNA's "Architectural Sheet Metal Manual" that apply to the design, dimensions, metal, and other characteristics of the item indicated.
Form to shapes and dimensions shown with planes and lines in true alignment.
Fabricate with longest practicable lengths.
Form Openings Head and Sill Flashing with End Dams. End dams welded or soldered.
Hem exposed edges.
Angle bottom edges of vertical surfaces to form drip.
Seams:
Common Lock Seams: 3/4 inch finish width; 4-ply loose-locked.
Flat Lock Seams: 5/8 inch finish width; 4-ply flat locked, malleted tight; sweat full with Solder.
Single Corner Seams: 3/4 inch finish width; 3-ply loose locked.
Solder-Lap Seams: 1 inch finish width; sweat full with Solder.
INSTALLATION, GENERAL
Install Work watertight, without waves, warps, buckles, tool marks, fastening stresses, distortion, or defects which impair strength or mar appearance.
Install planes and lines in true alignment.
Allow for Sheet metal expansion and contraction.
ROOF ACCSSORIES
Roof Access Hatches:
Single leaf, 30 inch x 36 inch, Bilco Type S.
Single leaf, 36 inch x 36 inch, Bilco Type-E.
Provide size as detailed on the Drawings
Safety Post: Bilco "LadderUP LU-1."
Roof Hatch Safety Railing: Bilco "Bil-Guard Hatch Railing System," model to match hatch size.
INSTALLATION, GENERAL
Vents, Hatches, and Curbs: Install in accordance with manufacturer's instructions, securely anchoring to roof deck. Coordinate with roofing application to ensure watertight installation.
Safety Rail: Bolt to hatch cover curb in accordance with manufacturer's instructions.
Safety Post: Bolt to hatch cover curb or ladder as applicable, in accordance with manufacturer's instructions.

JOINT SEALANTS

Caulk Exterior Joints as follows:
Masonry Wall Control Joints: Modified Silicone (STPe) Sealant with Sand matching Mortar color impregnated into Sealant surface to approximate Mortar Joint appearance
Joints around Window Frames, Door Frames, and other Openings in Exterior Walls: Modified Silicone (STPe) Sealant
Joints between Floor and bottom of Door Frames: Modified Silicone (STPe) Sealant
Joints between adjacent Dissimilar Materials: Modified Silicone (STPe) Sealant
Elsewhere caulking is shown on Drawings or required to weatherproof Building: Modified Silicone (STPe) Sealant
Caulk within Exterior Frame Walls as follows:
Space between Wall Framing Members and Windows, Doors, and other Openings where subject to Air-infiltration: Foam Air-Infiltration Sealant
Caulk Interior Joints as follows:
Acrylic Latex Sealant. If and where Masonry Joint is exposed to view impregnate Joint with Sand matching Mortar color to approximate Mortar Joint appearance.
Joints around Window Frames, Door Frames, and other Openings in Exterior Walls: Paintable Acrylic Latex Sealant
Joints between adjacent Dissimilar Materials: Paintable Acrylic Latex Sealant
Joints around toilet room fixtures: Modified Silicone (STPe) Sealant
Wet areas: One-part mildew resistant silicone sealant, in service exposure to conditions of high humidity and temperature extremes.
Elsewhere caulking is shown on Drawings or required to fill Open Joints: Paintable Acrylic Latex Sealant
MODIFIED SILICONE (STPe) SEALANT
Manufacturer & Brand: Sonneborn Sonolastic 150, or approved.
Material: 1-component Silyl Terminated Polyester
Manufacturing Standard: ASTM C-920, Type S, Class 25, Grade NS.
ASTM C-661 Shore A Hardness Range: 15-20
Joint Movement Range: Plus 100% to Minus 50%
Minimum Elongation: 1200%
ACRYLIC LATEX SEALANT
Manufacturer & Brand: Contractor's choice
Components: 1
Manufacturing Standard: ASTM C-834
Minimum ASTM C-736 Recovery: 75%
Joint Movement Range: Plus or Minus 7½ %
FOAM AIR-INFILTRATION SEALANT
Manufacturer & Brand: Grace Polycel One, or approved.
MILDEW RESISTANT SILICONE SEALANT
Manufacturer & Brand: Tremco Tremsil 200; Pecora 898
Material: One part mildew resistant silicone sealant
Manufacturing Standard: FS TT S 00230C, Class A, TT S 1S43A, Class A, or ASTM C920, Type S, Grade NS, Class 25.
SEALANT COLORS
Foam Sealant: Contractor's choice
Approximate color of Adjacent Surfaces, unless otherwise indicated, and subject to Owner's Representative's approval. Obtain Owner's Representative's instructions if Sealant is adjacent to more than 1 different color.
PRIMER & SURFACE CONDITIONER
Manufacturer & Type: Recommended by Sealant Manufacturer
BACKER ROD
Manufacturer & Brand: Nomaco SOF Rod
Material: Polyolefin Open & Closed-cell, soft-rod, non-off gasing, and recommended by Sealant Manufacturer for conditions of use.
Chemically inert. Non-absorbing.
Diameter: 25% greater than Joint width
Extent of Work: Provide for all Sealants, except Foamed types.

DUTCH BROS COFFEE

CORALIC ARCHITECTURE

ARCHITECT
CORALIC, LLC
EDIN CORALIC
9700 MACKENZIE ROAD, STE. 222,
ST. LOUIS, MO 63123
p: 314.578.4953
e: edin@coralicarchitecture.com

STRUCTURAL ENGINEER
JAMES C. KREHER
JIM KREHER
208 N. MAIN STREET,
COLUMBIA, IL 62236
p: 618.281.8505
jimk@kreherengineering.com

MEP ENGINEER
Case Engineering
DARRELL R. CASE
796 MERUS CT.,
FENTON, MO 63026
T. 636.349.1600 F. 636.349.1730
dcase@caseengineeringinc.com

EDIN CORALIC ARCHITECT
A-2013031004 - EXP. 12-31-2021

STATE OF MISSOURI
EDIN CORALIC
NUMBER A-2013031004
ARCHITECT
10.11.2021

MISSOURI CERTIFICATE OF AUTHORITY NO. 2013041393

Project No: MO0102

Dutch Bros Coffee - New Freestanding Store

500 NW Chipman Road, Lee's Summit, Missouri 64086
for: Dutch Bros Coffee
110 SW 4th St.
Grants Pass, OR 97526

ISSUED FOR PERMIT:
10.11.2021

REV:	DATE:	DESCRIPTION:

SHEET NAME:

SPECIFICATIONS

SHEET NUMBER:

G1.2

© 2020 DB Franchising USA, LLC

BOND BREAKER TAPE
Manufacturer & Brand: Contractor's choice
Material: Polyethylene Tape, or approved.
Extent of Work: Where Backer Rod can not be used, provide Tape where necessary to prevent 3-sided adhesion of Sealant to Substrate
FOAM SEALANT DAMS
Material: Contractor's choice
Minimum UL Fire Resistance Rating:
At Dams Remaining in Place: Match adjacent Wall or Floor Rating.
At Dams to Be Removed: None required
INSTALLATION - GENERAL
Follow Manufacturers' instructions.

Installation:
Provide access panels in non-accessible walls and ceilings wherever there is equipment or a device that needs maintenance. Locate access panels directly under or in front of the equipment or device to enable service personnel to reach and service equipment. Panels shall be sized to accommodate the largest piece of equipment. The location of access panels shall be designed to ensure the location is accessible for maintenance and operation requirements.
Provision of access shall be provided to all maintained equipment such as valves, relays, resets, monitor devices, etc. Coordinate elements being installed by multiple trades to ensure clear access to elements requiring maintenance.

GLASS PANEL SECTIONAL OVERHEAD DOORS
MANUFACTURER/PRODUCT: Overhead Door Corp. "521 Series."
SUBMITTALS
Shop drawings: Include detailed plans, elevations, details of framing members, required clearances, anchors, and accessories. Include relationship with adjacent materials.
COMPONENTS
Sectional Door Assembly: Stile and rail assembly secured with 1/4-inch diameter through rods.
Operation: Motorized
Lock: Interior keyed slide lock, keyed to building master, and interlock switch for automatic operator.
Weatherstripping: Vinyl closures at jambs and head, flexible PVC on bottom section.
Glazing: 1/2-inch thermal pane, clear DSB glass inside, tempered glass outside, Vitro Solarban 60 Low-E coating on No. 2 surface.
Finish: AAMA 611 Architectural Class I clear anodized coating conforming with AA M12C22A41.
Electric Motor Operation: Provide UL listed electric operator, size and type as recommended by manufacturer to move door in either direction at not less than 2/3 foot nor more than 1 foot per second. Operator shall meet UL325/2010 requirements for continuous monitoring of safety devices.
Operator Controls: Key operated control station with open, close, and stop buttons.

ALUMINUM ENTRANCE & WINDOW WALL SYSTEM
SYSTEM DESIGN REQUIREMENTS
In accordance with governing laws, regulations, codes, and requirements of governing jurisdiction,; design, engineer, fabricate, and install Work of this Section, including System Supports & Attachments, in compliance with Drawings, Specifications, and the following Design Loads:
Loads listed in Structural Notes on Drawings
Wind Loads: Satisfy Building Code Exposure B requirements
Maximum Surface Deflection:
Spans up to 14 ft.: L/240
Spans 14 ft. & Greater: L/300
Do not cause loss of Glass Bite greater than 25% of Design Dimension
SYSTEM PERFORMANCE REQUIREMENTS
Design, engineer, fabricate, and install Work of this Section to satisfy the following:
Withstand Thermal Expansion induced by up to 60º F Temperature Shift without System buckling, Glass stress, Sealant failure, Fastener damage, or other detrimental effects.
Minimum AAMA 1502.7 Condensation Resistance Factor (CRF): 60
ASTM E-1105 System Water Penetration Field Test conducted prior to installation of Interior Finish Materials: No penetration at 8 psf.
Submit Shop Drawings
Show construction, materials, profiles, thicknesses, dimensions, fasteners, supports, anchors, required clearances, and other pertinent details.
ALUMINUM
Alloys & Tempers, unless otherwise modified, as follows:
Exposed Extrusions: 6063-T6
Structural Shapes, Blocking, Bracing, & other Concealed Members: 06063-T6
Casting: 214-T6
Sheetmetal: 5005-H32
Finish: Concealed Work: Mill finish

PASS WINDOWS
MANUFACTURER: QUIKSERV
PRODUCTS
SS-4035E: Fully automatic side sliding electric window with thru-beam.
Unit Size: 48"W x 41"H
Service Opening: 20-3/4"W x 20-13/16"H
1/4" clear tempered safety glass
Weather-resistant and sealed
Clear Anodized Aluminum
Corrosion-resistant material: anodized aluminum and #304 – #3 finish stainless steel
Security locking systems
Manual operation upon power failure
SC-3030: Three side view, manual opening, self-closing drive thru window
Unit Size: 36"W x 36"H
Service Opening: 14-1/4"W x 29"H
1/4" clear tempered safety glass
Weather-resistant and sealed
Clear Anodized Aluminum
Corrosion-resistant material: anodized aluminum and #304 – #3 finish stainless steel
IFSC-4040: Self-closing drive thru window
Unit Size: 48"W x 48"H
Service Opening: 20-1/4"W x 41"H
1" insulating clear tempered safety glass
Weather-resistant and sealed
Clear Anodized Aluminum
Corrosion-resistant material: anodized aluminum and #304 – #3 finish stainless steel
Air Curtain
Non-heated Berner air curtain for SC-3030 and IFSC-4040 window units.
Max Air Volume 645 CFM
Max Air Velocity 2100 FPM
Volts: 120V, single phase
Pre wiring with drive-thru window for easy mounting and installation on-site
Relay to sync operation of air curtain with window opening and closing

DOOR HARDWARE
HARDWARE SCHEDULE
Refer to HARDWARE GROUPS on the Drawings for specific requirements for each hardware group.
Refer to DOOR SCHEDULE for hardware group assigned to each door.
Submit similar to Shop Drawings.
Organize into Hardware Sets, and indicate hardware group number, each Item in the group, Opening, Door size, Door hand, Frame Material, Fire-resistance Label Rating, Keying, Material, Finish, and Manufacturer's Model Number.
HARDWARE
Products shall be produced by single manufacturer, regardless of whether multiple manufacturers are specified.

KEYS
Material: Nickel-Silver or approved.
Keying Instructions: As directed by Owner

GLAZING
GLASS-GENERAL
All Glass shall be clear and smooth.
Thickness: Follow Building Code requirements.
FLOAT GLASS
Approved Manufacturers: AFG, AHC, FG, GG, LOF, PLK, PPG, SG, VA, or approved.
Manufacturing Standard: ASTM C-1036, Type I, Quality-Q3, Class I (clear),
Quality: Glazing Select

09 FINISHES
PLASTER ASSEMBLIES – SIDING SCHEDULE ALTERNATE
Scope: Furnish all labor, material, equipment, and services necessary for the installation and finishing of all lath and plaster on wood framing.
REFERENCES
- ASTM C1063, Standard Specification for Installation of Lathing and Furring to Receive Interior and Exterior Portland Cement-Based Plaster.
- Metal Lath Association Specifications for Metal Lathing and Furring.
- USG Co. Lathing and Plastering Handbook.
- American Concrete Institute (ACI) 524R Guide to Portland Cement Plastering.

MATERIALS
Stucco Netting: ASTM C1032, 1 1/2 inch x 17 gauge self furring, hexagonal shaped wire mesh, hot dip galvanized finish per ASTM A123, Coating Grade 60.
Metal Molding On Metal lath: Dietrich Metal Framing, "CBZA" 1-A Expanded Flange Corner Bead, zinc; "XXZB" 7/8-inch Type 66 Casing Bead, zinc; "VVZJ" Double-V, 7/8-inch expansion joint, zinc; "FHA7" 7/8-inch foundation weep screed, 26 gauge hot-dip galvanized steel.
Fasteners for Attaching Metal Lath to Substrates: Complying with ASTM C 1063.
Portland Cement: ASTM C150, Type I.
Cement Plaster Aggregate: ASTM C144, fine graded plastering type sand.
Lime: ASTM C206, Type S.
Reinforcing: 1/2 inch chopped fiberglass strands, Type AR.
Building Paper: Grade D building paper UU B 790A, 30 minute water resistant.
Bonding Agent:
Cement Plaster, Spray On: Larsen Products "Weld Crete."
Cement Plaster, Additive: Thoro System "Acryl 60" and Larsen Products "Acrylic Admix 101."
Waterproofing / Hardening Agent: Anti-Hydro International, Inc. "Anti-Hydro."
MIXES
Cement Plaster: ASTM C926, Type CL.
Scratch and brown coats may be applied with the double back method. Plaster mix for scratch and brown coats:
1 part Portland cement Type 1.
3/4 to 1-1/2 parts lime.
4 parts sand, scratch coat; 5 parts sand, brown coat.
1/4 pound fiberglass shorts (or greater if required by manufacturer) per 100 pounds of cement.
Bonding Agent Additive: 1 part bonding agent, 3 parts water.
Finish Coat: ASTM C926, Type FL.
1 part portland cement.
3 parts cement plaster aggregate.
1 1/2 to 2 parts lime.
Bonding Agent Additive: 1 part bonding agent, 3 parts water.
All parts by volume.
PREPARATION
For plaster work of all types, maintain continuous work area temperature of 55 degrees F minimum, and 80 degrees F maximum for period of seven days before, during, and eight days following plaster application; heat and ventilation evenly distributed to all areas; with deflectors used to prevent hot spots and uneven drying defects.
INSTALLATION
Prior to installation of stucco netting on exterior surfaces, apply one layer of building paper over the Weather Resistant Barrier, lapping succeeding courses shingle fashion minimum 6 inches.
Installation of all stucco netting, laps, fastenings, control joints, corner beads, casing beads, and all other metal molding accessories required for a complete installation shall conform to ASTM C1063, The Metal Lath Association Specifications,
Cement Plaster:
Mix cement plaster additive with the water at a ratio of two gallons minimum, three gallons maximum of water to one gallon of bonding agent.
Apply one coat of bonding agent over all surfaces to be plastered in accordance with the manufacturer's directions.
Apply plaster in three coats to a minimum thickness of 7/8 inch over sheathing.
Add only enough water for the mixing and application. Keep water to a minimum in mix.
Scratch coat 3/8 inch; brown coat 3/8 inch; the brown coat (second coat) can be applied over scratch coat (first coat) immediately after initial set of scratch coat when the plaster system is applied over a solid substrate (double back method).
Wait 14 days between application of the brown coat and the finish coat, moist curing during the first 48 hours.
Finish coat shall be applied no sooner than 14 days after application of brown coat, to an evenly dampened surface, to a thickness of no less than 1/8 inch. Trowel to a fine sand finish. Moist cure for at least 48 hours after application.

TILE
Tile Installation: Conform to Tile Council of North America (TCNA) Handbook for Ceramic, Glass Stone Tile Installation
SAMPLES
Prior to ordering, submit: Two of each type of tile, grout and accessory to be used in this Project for review and approval by Owner Representative.
CRACK BRIDGING MEMBRANE
Manufacturer & Brand: MAPEI Mapelastic Aquadefense
Reinforcing Fabric: MAPEI Reinforcing Fabric.
Material: Elastomeric Membrane satisfying conditions of use, and capable of bridging open Cracks and Joints without inducing stress onto Tile.
Provide a continuous barrier over entire area to receive tile. Include Reinforcing Fabric at problem areas such as coves, corners, cracks, and drains.
BACKING BOARD
Manufacturer & Brand: Custom Building Products Wonderboard, FinPan Util-A-Crete, James Hardie Hardibacker Cement Board, National Gypsum PermaBase, Schluter Kerdi-Board, USG Durock, or approved.
Material: Glass-mesh reinforced Cement Board
Minimum Thickness At Walls: 1/2 inch or match adjacent substrate
Fasteners: Screws, and where necessary Washers, recommended by Board Manufacturer.
Joint Reinforcement Tape: 2 inch wide Vinyl-coated Fiberglass Mesh
Provide over Wall Framing Studs where schedule to receive Ceramic Tile
Moisture Retarder, Wall: Type 1, 15 lb. asphalt saturated felt, ASTM D226; or 6 mil polyethylene sheet, ASTM D4397.
MORTAR
Manufacturer & Brand: MAPEI Ultraflex LTF
Type: Premium Large and Heavy Tile Mortar with Polymer.
Provide at all tile
GROUT
Manufacturer & Brand: MAPEI Kerapoxy IEG
Type: 100% solids epoxy grout.

Components:
IEG CQ Part A & B Large Kit
IEG Q Part C, #47 Charcoal
Mix Ratio: Two parts C per one A & B Large Kit
Installation Cleaners:
MAPEI Ultracare Grout Release
MAPEI Ultracare Epoxy Haze Remover
Provide at all tile. Install in strict adherence to Manufacturer's printed instructions.
See Color Schedule on Drawings.
TILE – GENERAL
Manufacturing Standard: ANSI 137.1
Grade: Standard (no Seconds accepted).
Color & Pattern: See Color Schedule on Drawings.
Manufacturer is Daltile only

08 OPENINGS
HOLLOW STEEL DOORS & FRAMES
Submit Shop Drawings:
Show locations, elevations, principal construction features, and dimensions of each Door type and Frame type, cut-outs, reinforcement, joints, welds, finish, anchoring, and other pertinent details.
DOORS:
SDI Model: 1 (Full flush, hollow, and with exposed Edge Seams only)
SDI Grade: I (Standard Duty)
Minimum Metal Thickness: 16 gauge.
Core: 90 lb. minimum Phenolic Resin impregnated Honeycomb completely filling Core and bonded to both Face Skins.
Urethane Foam (maximum U = 0.09) fully bonded to both Face Skins in cold climate locations.
Sizes & Shapes: See Door Schedule and Drawings.
FRAMES:
Type: Head and Jamb Intersections mitered and continuously welded over full depth of Frame, including Returns and Rabbets: Exterior and interior.
Minimum Metal Thickness: 16 gauge
Sizes & Shapes: See Door Schedule and Drawings.
FABRICATION:
Accurately form Metal to required sizes and shapes.
Bevel Lock-side Edge of Doors 1/8 inch in 2 inches. Square edged Doors not acceptable.
Provide suitable sinkages in doors and frames for all mortised or countersunk hardware, with steel reinforcement inserted for attaching hardware. Reinforcement of doors and frames to be as follows:
Hinge Pockets: Reinforce hinge pockets with 3/16 inch thick x 12 inch long x full frame width steel backing welded fabrication.
All Other Hardware Mountings: Reinforce all other hardware mountings at heads, jambs, stiles, or rails with minimum 12 gauge (0.097 inch) steel plate welded fabrication at all machine screw sinkages and 14 gauge (0.068 inch) minimum at all cylinder lock hole locations to prevent collapsing of doors and malfunctioning of hardware. Double gauge sheet metal reinforcing is not acceptable for hardware backing.

SHOP FINISH
Dress Surface irregularities to smooth surface.
Chemically treat and clean exposed Surfaces.
Treatment: Doors and frames for doors formed from minimum 16 gauge (0.054 inch thick) commercial quality cold-rolled steel conforming to ASTM A366 or tension leveled steel conforming to ASTM A924, galvanized to ASTM A653, commercial steel, type B, coating designation A40, commercially known as paintable galvanneal. Steel for fabrication of all members exposed on exterior walls shall be galvanized to ASTM A653 with a minimum total coating weight of A125, 1.25 oz./s.f..

Finish: Manufacturer's standard Baked Enamel Finish; see Color Schedule on Drawings.

INSTALLATION
Follow Referenced Specifications and Manufacturer's instructions.
Secure Anchors to Adjacent Construction.
Set Frames true with Adjacent Construction.
Accurately position Work.
Set Doors flush with Frame face.
Set Doors plumb to hold any desired position.
Fill any exposed Fastener Heads, and finish to match adjacent Surface.

ACCESS DOORS AND PANELS
Manufacturer/Product: 2. Acudor "UF-5500," non-rated, universal wall-ceiling, flanged type.
Minimum 24 inches x 24 inches ceiling access panels and 18-inches x 18-inches wall access panels. All access panels shall open a minimum of 90 degrees. Minimum 24 inches x 24 inches for crawl access, larger sizes as detailed or suitable for maintenance access to concealed equipment and devices. Fasten door panels to frames with continuous hinge, supply access doors and panels with screwdriver accessible latch, and factory applied white rust inhibitive prime coat.
Exposed Work: AAMA 611 Architectural Class I clear anodized coating conforming with AAMA M12-C22 A41
FASTENERS
Type: Recommended by Manufacturer for conditions of use
Material: Galvanically compatible with Adjacent Materials
Finish:
Where Exposed to View: Match Adjacent Material
Where Concealed: Contractor's choice
CORROSION INSULATING COMPOUND
Material: Asphaltic Coating Compound
Manufacturing Standard: Fed. Spec. TT-C-494 type II
DOOR FRAMES & WINDOW WALL FRAMES
Material: Aluminum
Manufacturer: Arcadia, Kawneer, US Aluminum, Vistawall, or approved.
Series: Match Kawneer **"Trifab VG 451T" thermally broken framing system**
SWINGING DOORS
Material: Aluminum
Manufacturer: Arcadia, Kawneer, US Aluminum, Vistawall, or approved.
Stile Width: Medium
GLAZING STOPS
Shape: Beveled
SASH WEATHERSTRIPPING
Material: Manufacturer's standard
Maximum Allowable Air Infiltration: 0.5 cfm per lineal ft. of Operating Sash perimeter
DOOR WEATHERSTRIPPING
Material: Flexible nonporous Polymeric Strip
Features:
All Weather stripping: Easily replaceable
Sill Weather stripping: Easily adjustable for wear
FABRICATION
Provide concealed Steel Reinforcement where indicated or required to resist Wind or other Applied Loads.
Fabricate Connections as required for strength and rigidity using concealed Mechanical Fastenings wherever possible. Where not possible, welding may be used.
Drain Glazing Channels to prevent Insulating Glass or Laminated Glass from standing in Water.
Fabricate with Weep Holes to evacuate to Building Exterior any exterior Water or interior Condensation.
Cut Horizontal Members between Vertical Members.
Match exposed Welds with adjacent Material, free of porosity, cracks, and blow-holes.
Select Materials carefully for matching Color and Texture after finishing.
Fabricate Flat Surface smooth and true, and free from waves, buckles, and seams.
Fabricate Edges, Corners, and Angles clean, sharp, and square.
Fit Members with hairline, virtually invisible joints.
Allow for expansion and contraction.
Prevent Noise resulting from thermally-induced Material movement, Vibration harmonics, or Wind passage.
Make Exterior Work permanently weather tight. Seal all joints in system and at perimeters to prevent infiltration and entry of water. Protect aluminum from galvanic attack where in contact with dissimilar metals by approved paints or tape.
Fabricate with the following clearances:
Between Doors & Frames: 1/8 inch
Between Door Bottoms & Thresholds: 1/4 inch
Between Door Bottoms & Floor: 3/4 inch
ALLOWABLE INSTALLATION TOLERANCES
Member Alignment: True within 1/8 inch per 12 feet.
Openings:
Accurately size and locate within 1/4 inch.
Squareness: 1/8 inch maximum difference between opposite Diagonal Measurements.

TEMPERED GLASS
Manufacturing Standard: ASTM C-1048, Type I; Quality-Q3; Class I (clear)
Safety Performance Standard: CPSC 16-CFR-1201-C11

THERMAL INSULATING GLASS
Approved Manufacturers: AFG, AHC, FG, GG, LOF, PLK, VITRO, SG, VA, or approved.
Brand: Similar to VITRO Solarban 60 Clear + Clear
Assembly Type: Soft Coat Low-E (Vacuum Deposition) on Surface #2
National Fenestration Rating Council (NFRC) Certified Performance Requirements:
Maximum Summer "U" Value: 0.27
Maximum Winter "U" Value: 0.29
Maximum Shading Coefficient: 0.45
Maximum Solar Heat Gain Coefficient: 0.39
Minimum Light Transmission: 70%
Glass Layers: 2
Overall Thickness: 1 inch
Metal Spacer Type: Thermally broken
Metal Spacer Finish: Match adjacent Glazing Stops.
LAMINATED IMPACT RESISTANT GLASS
2 sheets bonded with protective inner layer
'Impact Code Approved'
Thickness: required by code
Extent of Work: Door as indicated on Door Schedule
GLAZING COMPOUND
Manufacturer: Dow, G.E., Gibson-Homans, 3-M, Sonneborn, or approved.
Material:
For Insulating Glass:
Compatible with Glass Edge Sealant and recommended by Insulating Glass Fabricator for conditions of use.
For Field-glazed Units:
At Hollow Steelwork: Closed Cell Tape Bedding with Silicone Compound
At Aluminum Entrance & Window Wall Sections: Neoprene or Vinyl Extruded Bead recommended by Section Manufacturer

DUTCH BROS COFFEE

CORALIC ARCHITECTURE

ARCHITECT
CORALIC, LLC
EDIN CORALIC
9700 MACKENZIE ROAD, STE. 222,
ST. LOUIS, MO 63123
p: 314.578.4953
e: edin@coralicarchitecture.com
STRUCTURAL ENGINEER
JAMES C. KREHER
JIM KREHER
208 N. MAIN STREET,
COLUMBIA, IL 62236
p: 618.281.8505
jimk@kreherengineering.com
MEP ENGINEER
Case Engineering
DARRELL R. CASE
796 MERUS CT.,
FENTON, MO 63026
T. 636.349.1600 F. 636.349.1730
dcase@caseengineeringinc.com

EDIN CORALIC ARCHITECT
A-2013031004 - EXP. 12-31-2021

STATE OF MISSOURI
EDIN CORALIC
NUMBER A-2013031004
ARCHITECT
10.11.2021

MISSOURI CERTIFICATE OF AUTHORITY NO. 2013041393

Project No: MO0102
Dutch Bros Coffee - New Freestanding Store
500 NW Chipman Road, Lee's Summit, Missouri 64086
for: Dutch Bros Coffee
110 SW 4th St.
Grants Pass, OR 97526

ISSUED FOR PERMIT:
10.11.2021

REV:	DATE:	DESCRIPTION:

SHEET NAME:
SPECIFICATIONS

SHEET NUMBER:
G1.3

© 2020 DB Franchising USA, LLC

FLOOR TILE
Style: 'SureTread by DalTile
Components:
SURETREAD 6X6 Field Tile 0Q73, Black (with tread)
SURETREAD -P3665F- 6X6 Sanitary Cove Base 0Q74, Black (smooth paver style)
SURETREAD -PB3665- ¾ X 6 Cove Base Inside Corner 0Q74, black (smooth paver style)
SURETREAD -PC(L/R)3665 -6x6 Left/Right Cove Base Outside Corner 0Q74 (smooth paver style)
Edges: Square
Pattern as shown on Drawings
See Color Schedule on Drawings.
WALL TILE
Style: Noted on Finish Schedule on Drawings
Edges: Square
Nominal Face Size: Noted on Finish Schedule on Drawings
Pattern as shown on Drawings
See Color Schedule on Drawings.
PROTECTIVE SEALER
Type: Made or recommended by Tile Manufacturer.
Provide at Grout only
SEALANT
Manufacturer & Brand: MAPEI Mapesil T
Type: Low-VOC Silicone with Mildew Inhibitor
Provide in the following locations:
Around any Plumbing Fixture Fittings which penetrate Tile.
Around any Accessories which penetrate Tile.
At Joints between Tile and adjacent Dissimilar Materials.
At joint between wall base and floor tile.
Verify compatibility and recommendation of Tile manufacturer
TILE INSTALLATION STANDARDS
FLOORS: Use TCNA F131-16, "On-ground cementitious mortar and epoxy grout" installation procedure consisting of cementitious mortar bond coat and epoxy grouted ceramic tile for installation over on-grade slabs.
WALLS: Use TCNA W244C-11 "Cement backer board" installation procedure consisting of vapor retarder membrane on studs, cement backer board, cementitious mortar bond coat on cement backer board, and epoxy grouted ceramic tile.
ALLOWABLE INSTALLATION TOLERANCES
Horizontal Surfaces: True within 1/8 inch per 10 ft. in all directions
Vertical Surfaces: True within 1/8 inch per 8 ft. in all directions

ACOUSTIC CEILING TILE
CERTIFICATION OF CODE COMPLIANCE
Prior to starting Work, submit to Owner's Representative written certification that Ceiling System complies with Seismic Loading requirements of Building Code and that System is acceptable to Building Official.
ACOUSTIC TILE
Manufacturer:
Armstrong, Celotex, USG Interiors, or approved.
Manufacturers listed above are approved provided they can supply Units that match specified pattern to Owner's Representative's satisfaction.
Product: USG 3260 Sheetrock Brand Lay-In Gypsum Ceiling Panels
Water-repellent, Washable, Scratch-resistant, soil -resistant
Color: White
ASTM E-84 Flame Spread Class: A
Face Size: 24x24 inches
Edges: Square
TILE SUSPENSION SYSTEM
Manufacturer: USG DX/DXL, Armstrong, Chicago Metallic, Donn, or approved.
Material: Aluminum
Type: Heavy-duty, exposed Tee in 2 directions, Tile removable for access to Space above.
Face Width: 15/16 inch
Minimum U.L. Fire Resistance Rating: None required
Edge Trim: Match Suspension System
Finish: Manufacturer's standard Enamel
Color: Match adjacent White Acoustic Tile.
Layout: See Drawings
INSTALLATION
General:
Follow Manufacturer's instructions, and Layout Drawings, except as modified hereunder.
Delay start of Work until above-ceiling Work by other Trades has been completed.
Tile Suspension System:
Where Mechanical and Electrical Work interferes with regular spacing of Hangers, provide additional Hangers and Channels and make necessary adjustments in Ceiling construction.
Do not attach to or pass Hangers through Mechanical or Electrical Ductwork.
Provide Framing around any recessed Lighting Fixtures and other Openings.
Maximum Vertical Hanger Splay: 6 inches per 4 ft.
Acoustic Tile:
Install in level plane, in straight line courses, and with solid bearing on Support Members.
Minimum Border Tile Width: 1/2 Unit dimension, unless otherwise shown on Drawings.
Install any Pattern grain in one direction.
Seal Openings around Pipe, Duct, or other penetrations through Tile with Foam Penetration Sealant.
Where Acoustic Tiles abut Vertical Surfaces, trim Joints with Suspension Metal Edge Trim.
Maximum Vertical Hanger Splay: 6 inches per 4 ft.
Install in level plane, in straight line courses, and with solid bearing on Support Members.
Minimum Border Tile Width: 1/2 Unit dimension, unless otherwise shown on Drawings.
Install any Pattern grain in one direction.
Seal Openings around any penetrations through Tile with Foam Penetration Sealant .
Where Acoustic Tiles abut Vertical Surfaces, trim Joints with Suspension System Metal Edge Trim.
TOLERANCES
Maximum fully loaded Ceiling Deflection in accordance with ASTM C-635: 1/360 of Span
Install Finish Surfaces level and true within 1/8 inch per 12 ft.
Maximum Ceiling Suspension System Runner rotation from plumb: 2 degrees

LINEAR WOOD CEILINGS
Manufacturer: Hewn Elements
Product: Natural Northwestern Spruce, factory pre-stained, color as selected by Architect.
Profile: T&G, 1/8" reveal, random lengths 8' to 12', board size as detailed
INSTALLATION
Direct attach to ceiling framing, nailing through tongue for concealed fastening.

PAINT & FINISHES
WORK SPACE ENVIRONMENTAL REQUIREMENTS
Comply with Manufacturer's recommendations.
Maximum Relative Humidity: 85%
Minimum Dew Point Variance between Air & Surface Temperature: 5ºF.
Minimum Ambient Air & Surface Temperature during application and until Film is dry-hard thereafter: 45ºF.
Do not work:
Where Dust, Air-borne Particles, or Insects are present.
Where Inclement Weather may damage Coating Surface.
With less than 30 ft. candles of Available Light measured 3 ft. above adjacent Floor.
COLORS
See Color Schedule on Drawings.
PRODUCT
Manufacturer: Sherwin Williams, no substitute
SURFACE PREPARATION
General: Remove any Loose Material, Dirt, Dust, Rust, Grease, Oil, loose Scale, or Foreign Matter.
Zinc Alloy & Galvanized Steel:
Thoroughly clean with Solvent or pressure-wash with Detergent in hot Water.
Etch Metal with Metal Conditioner or in accordance with Steel Structures Painting Council Specifications.

COATING APPLICATION
General:
Follow Coating Manufacturer's instructions.
Do not apply initial Coating until Surface Moisture Content is within limitations recommended by Coating Manufacturer. Where in doubt test with Moisture Meter.
Apply Coatings with suitable Brush, Roller, or Spray Equipment recommended by Coating Manufacturer.
Back-roll or brush-in spray-applied Primer Coats to assure Coating penetration.
FIELD QUALITY CONTROL
Before proceeding with remaining Work, request Owner's Representative to inspect each first-finished Room, Space, and Item for acceptability.
Immediately following application, Wet Film Thickness of Coatings may be tested in compliance with ASTM D-4414.
PAINTING SCHEDULE
General:
Prime Coats specified below may be omitted where Factory-applied Shop Coatings have been applied by other Trades.
Quantities of Coats specified below are minimum. Finished Work shall be even, uniform, and free from cloudy and mottled appearance. Apply additional (4 minimum) Coats of any Deep or Bright Tone Colors where necessary to hide Substrate.
Minimum Dry Film Thicknesses specified below include Prime Coat and Finish Coats combined.
Exterior Stucco
Prime Coat: 100% Acrylic, Alkali Resistant
Sherwin Williams Loxon Concrete & Masonry Primer, LX2W50. no substitutions.
Second and Third Coats: One component, pigmented, water-base elastomeric.
Sherwin Williams ConFlex XL Smooth, CF11 Series.
Exterior Ferrous Metal:
Latex Enamel
1 coat Bonding Primer (MPI Product #107 - *Min. Solids Volume 38% & Max. VOC 100 grams/liter*), followed by:
2 coats Semi-gloss (MPI Level #5) Latex Enamel (MPI Product #11 - *Min. Solids Volume 39% & Max. VOC 50 grams/liter*)
Minimum Total Dry Film Thickness: 4.0 mils
Interior Wood
Prime and Backprime Coat: Water-based acrylic wood primer.
Sherwin Williams Premium Wall & Wood Primer, B28W8111.
Second and Third Coats: Interior water-based alkyd enamel, gloss level 5.
Sherwin Williams ProMar 200 Waterbased Acrylic-Alkyd Semi-gloss, B34-8250 Series.
Interior and Exterior Galvanized Steel:
Latex Enamel
1 coat Galvanized Primer, (MPI Product #134), followed by:
2 coats Semi-gloss (MPI Level #5) Latex Enamel (MPI Product #11)
Minimum Total Dry Film Thickness: 4.0 mils
Exposed Mechanical & Electrical Work:
Piping, Equipment, & Supports:
1 coat Anti-corrosive Metal Primer (MPI Product #79 - *Min. Solids Volume 44% & Max. VOC 100 grams/liter*), followed by:
2 coats Semi-gloss (MPI Level #5) Alkyd Enamel (MPI Product #81 - *Min. Solids Volume 39% & Max. VOC 50 grams/liter*)
Minimum Total Dry Film Thickness: 4 mils
Mechanical Grilles, Diffusers, & Louvers:
2 coats Semi-gloss (MPI Level #5) Alkyd Enamel (MPI Product #81) - *Min. Solids Volume 39% & Max. VOC 50 grams/liter*
Minimum Total Dry Film Thickness: 4.0 mils
Electrical Conduit:
1 coat Galvanized Primer (MPI Product #134), followed by:
2 coats Semi-gloss (MPI Level #5) Latex Enamel (MPI Product #94)
Minimum Total Dry Film Thickness: 4.0 mils
Electrical Panel Board Doors and Access Panels:
1 coat Galvanized Primer (MPI Product #134), followed by:
2 coats Semi-gloss (MPI Level #5) Latex Enamel (MPI Product #94)
Minimum Total Dry Film Thickness: 4.0 mils

ANTI-GRAFFITI COATINGS
Scope: Furnish all labor, material, and equipment required for the installation of anti-graffiti coatings on brick, cast stone, concrete, stucco, metal, and CMU.
Penetrating Graffiti Control for porous material (brick, cast stone, concrete, and CMU):
Clear Penetrating Anti-Graffiti Coating: Penetrating organofluorosiloxane solution with water solvent and less than 25 g/l VOCs. No appreciable difference in surface appearance to non-coated surface.
Manufacturer/Product: Evonik "Protectosil ANTIGRAFFITI."
Clear Sacrificial Anti-Graffiti Coating for non-porous material (painted stucco and pre-coated metal):
Manufacturer/Product: Prosoco, "Defacer Eraser Sacrificial Coating SC-1,"
Application:
Read manufacturer's "Preparation" and the Safety Data Sheet before use.
Provide graffiti resistant coating for all exterior cladding materials accessible to the public to a height of 10'0" above grade.
Always test each type of surface for suitability and results before overall application. Different surface compositions may result in absorption and/or appearance differences. Also test for application speed, pattern and technique needed for a uniform, even coat.
Apply in strict accordance with manufacturer's printed application instructions.

10 **SPECIALTIES**
SIGNS
ROOM IDENTITY SIGNS
Manufacturer & Style: Contractor's Choice
Material: Plastic Laminate
Background Color: Blue
Letter Color: white
Letter Height: 1 inch minimum
Letter Style: Arial
Letter Case: Upper
Sign Length: 1 inch longer on each end than Sign wording
Sign Height: 1/4 inch beyond each edge of Sign wording
Special Requirement: Include Braille Language where required by ADA.
Wording, Symbols, Locations, & Quantities: See Drawings
FASTENERS
Where Exposed Fasteners are shown on Drawings, or otherwise approved:
Material: Stainless Steel
Type: Satisfy conditions of use.
Size & Quantity: As required to secure Members in position.
VEHICLE PARKING CONTROL SIGNS
Manufacturer: Contractor's choice
Sign Panel:
Approximate Face Size: 12x18 inches
Material: Sheet Steel or Aluminum
Letter Height: 3/4 inch
Colors: White Letters on Blue background or vice versa
Required Markings:
Disabled Parkers Signs:
Wording: Per State and Local jurisdiction requirements
Logo: International Symbol of Access for Handicapped Users
At Parking Stalls adjacent to 8 ft. wide Aisles, if any: Provide 3 inch high "VAN-ACCESSIBLE" Sign mounted directly below Main Sign.
Mounting Methods:
Where so indicated on Drawings: Wall-mount
Elsewhere: Mount on Galvanized Steel Support Post
Mounting Heights above adjacent Walkway Surface to Sign Bottom:
If and where mounted on Wall: 48 inches
If and where mounted on Post: 84 inches
Extent of Work: Provide 1 Sign centered on each Vehicle Parking Stall reserved for Disabled Users.
INSTALLATION
Follow Manufacturer's instructions.
Install plumb, level, square, and true as applicable.
Secure to Substrate.
CORNER GUARDS
Manufacturer/ Product: AIS Industries, Custom, Drilled, 2" wings, 120" long, stainless steel flush mount, sharp 90-degree corner. Mounting hardware included.
Install on all outside corners of interior walls.
TOILET & BATH ACCESSORIES
TOILET PAPER DISPENSERS (OFCI)
Mounting: Surface
Provide 1 adjacent to each Toilet.
PAPER TOWEL DISPENSERS (OFCI)
Mounting: Surface
Provide 1 adjacent to each Lavatory or as shown on Drawings
LIQUID SOAP DISPENSERS (OFCI)
Mounting: Through Countertop
Accessories: Provide with Spacer to raise Dispenser Spout above Sink Rim.
Provide 1 adjacent to each Lavatory Sink.
TOILET SEAT COVER DISPENSERS (OFCI)
Mounting: Surface
Provide 1 adjacent to each Toilet. SANITARY NAPKIN DISPOSALS (OFCI)
Mounting: Surface
Provide 1 adjacent to each Women's Toilet.
HOOKS (OFCI)
Mounting Height above Floor, unless otherwise shown on Drawings: 54 inches.
Provide where shown on Drawings.
MIRROR
Manufacturer & Model: Bobrick B-165 2436, or approved.
Type: Channel Frame
Material: Stainless Steel
Mounting: Surface
Provide 1 at each Lavatory
GRAB BARS
Manufacturer & Model: Bobrick B-6806, or approved.
Material: Satin-finish Stainless Steel
Wall Clearance: 1-1/2 inches
At Toilet intended for Disabled Users:
Quantity: 3 Bars per Compartment
Horizontal Bars Mounting Height above Floor: 33 inches
Length:
At Side:
Horizontal Bar: 42 inches (Space 12 inches away from Rear Wall)
Vertical Bar: 18 inches (Extend vertically from front-end of Horizontal Bar)
At Rear: 36 inches (Extend 12 inches beyond Toilet centerline toward Compartment side wall and extend 24 inches beyond Toilet centerline toward open side of Toilet.)
INSTALLATION
If Mounting Locations are not specified herein, or shown on Drawings, locate where directed by Architect.
Follow Manufacturer's installation instructions and comply with ADA requirements of the Local Jurisdiction
Mount plumb, level, true, and secure.

MISCELLANEOUS SPECIALITIES
FIRE EXTINGUISHERS
Manufacturer: Contractor's choice.
Type: OSHA-approved and UL-rated for type A, B, & C fires
Color: Red
Size: 5 lb.
Fill and service Extinguishers prior to Project Substantial Completion. Attach Certificate of Service, including date, to each Extinguisher.
Mount Extinguishers on Manufacturer's standard Wall Brackets.
HIGH SECURITY KEY BOXES
Knox Co. "Series 3200 Knox-Box" with hinged door, UL Listed tamper switches, and recessed mounting kit.
Provide where shown on Drawings.
LOCKERS
Manufacturer/Model: ULINE H-3639, 18 lockers total.
Box Lockers: Six tier box lockers 12 inches wide x 12 inches deep x 72 inches high without legs. Each locker face 12 inches x 12 inches, equipped with padlock attachment. Sides, tops, and backs of all lockers solid, ventilation louvers in doors only. Doors fitted with lift type padlock locking handle.
AWNINGS
ES&A Sign and Awning Co., provide and install in locations as detailed on the Drawings.
VEHICLE PARKING BUMPERS
Material: Precast Concrete
Length: 6 ft.
Scuppers: Required
BICYCLE RACKS (OFCI)
Bicycle Capacity per Rack: 2
Provide where shown on Drawings.
SHOP PAINTING
Unless herein specified otherwise, factory-apply one coat Rust inhibiting Primer as specified in PAINTING to Ferrous Metal surfaces after fabrication, but before installation.
Substitute complete Factory-Finish where so specified herein.
BLOCKING & BACKING
Provide where necessary.
Specialties are shown on Drawings for Contractor's convenience. Verify location, type, and extent of Work before installing Blocking and Backing.

INSTALLATION
General:
Follow Manufacturer's instructions and approved Shop Drawings.
Secure Specialties plumb, level, square, and true as applicable.
Fire Extinguishers:
Mount on Wall Brackets; position Extinguisher top 48 inches above Floor.
High Security Key box;
Recess-mounted where detailed on exterior wall.
Lockers
Anchored to wall and curb in location as detailed, as recommended by Manufacturer.
Vehicle Parking Bumpers:
Secure to Pavement with grouted Steel Dowels and Epoxy Cement.
Maintain Scuppers open for free Water passage.
Bicycle Racks:
Anchor to adjacent construction as recommended by Manufacturer.

31 **EARTHWORK**
EARTH MOVING
Strip at least 6 inches of existing Topsoil, and stockpile for possible future use.
Remove from Topsoil any Vegetation, Sticks, Clods, Rocks larger than 1-1/2 inches, excessive Gravel, Subsoil, and Debris
Leave Bearing Surfaces undisturbed, level, and true. Where necessary, compact.
Where Excavation, through Contractor's error, is carried to levels lower than those shown on Drawings, fill to proper levels at Contractor's expense as follows:
Under Footings: Fill with Concrete as specified in Section 03-30-00. Earth Fill or Gravel Fill under Footings not permitted.
Under Paving & Walkways: Fill with compacted Gravel or Crushed Rock.
Following Subgrade preparation and within 24 hours prior to Fill or Base Course placement, proof-roll Subgrade beneath Building and Pavement Areas with fully-loaded 10 to 12 cu. yd. Dump Truck.
BAR RUN GRAVEL:
Maximum Size: 4 inches, Minimum Size: 5% maximum passing #200 Sieve
ALL OTHER GRAVEL:
Round; water-worn; washed; sound; durable Rock which is free of soft, friable, thin, elongated, or laminated Pieces; disintegrated Material; organic Matter; Oil; Alkali; or other Deleterious Substances.
SAND:
Fine granular, naturally produced by Rock disintegration and free from organic Material
NATIVE MATERIAL:
Existing Soil excavated from Project Site and stockpiled
IMPORTED LOAM:
Fertile, friable, natural, native of locality, and reasonably free of Subsoil, Clay, Silt, Stones, Lumps, Plants, Roots, Sticks, Weeds, Seeds, and other Extraneous Matter
GROUND STABILIZATION FABRIC:
Amoco, Type: Propex 2002 or approved
UTILITY TRENCHING
System layout on Drawings, including existing Utility locations, is diagrammatic and may not be exact.
Verify prior to starting Work.
If field measurements differ slightly from Drawing dimensions modify Work as required for accurate fit.
EXCAVATING:
Excavate to Lines and Grades shown on Drawings
Allow ample Space for Pipe and Pipe Bedding.
Leave Bearing Surfaces undisturbed, level, and true.
Allow for at least 24 inches cover over Pipe.
Width: Where parallel Pipes are to be laid within single Trench:
At least 18 inches wider than sum of inside diameters of parallel Pipes plus distance between Pipes.
Elsewhere:
For 4 inch I.D. Pipes & Smaller, if any: 18 inches minimum
For 6 inch I.D. & larger Pipes, if any: 24 inches minimum
PIPE BEDDING INSTALLATION:
At any Plastic Pipe or direct-buried Electrical Wiring: Sand
At Other Pipe: Crushed Rock
Fill full Trench width.
Minimum thickness below Pipe bottom: 4 inches

BURIED UTILITY MARKER INSTALLATION:
Minimum: 10 inches
Maximum: 12 inches
BACKFILLING:
Place Fills in 6 to 8 inch maximum Lifts
Compact with Mechanical Vibration.
Under and within 2 ft. of Structure Foundations, Slabs, or Pavements: 95%
Elsewhere: 90%
MATERIALS:
CRUSHED ROCK:

ARCHITECT
CORALIC, LLC
EDIN CORALIC
9700 MACKENZIE ROAD, STE. 222,
ST. LOUIS, MO 63123
p: 314.578.4953
e: edin@coralicarchitecture.com
STRUCTURAL ENGINEER
JAMES C. KREHER
JIM KREHER
208 N. MAIN STREET,
COLUMBIA, IL 62236
p: 618.281.8505
jimk@kreherengineering.com
MEP ENGINEER
Case Engineering
DARRELL R. CASE
796 MERUS CT.,
FENTON, MO 63026
T. 636.349.1600 F. 636.349.1730
dcase@caseengineeringinc.com
EDIN CORALIC ARCHITECT
A-2013031004 - EXP. 12-31-2021
STATE OF MISSOURI
EDIN CORALIC
NUMBER A-2013031004
ARCHITECT
10.11.2021
MISSOURI CERTIFICATE OF AUTHORITY NO. 2013041393

Project No: MO0102
Dutch Bros Coffee - New Freestanding Store
500 NW Chipman Road, Lee's Summit, Missouri 64086
for: Dutch Bros Coffee
110 SW 4th St.
Grants Pass, OR 97526

ISSUED FOR PERMIT:
10.11.2021

REV:	DATE:	DESCRIPTION:

SHEET NAME:
SPECIFICATIONS

SHEET NUMBER:
G1.4

© 2020 DB Franchising USA, LLC

Mechanically crush as follows:
Fracture at least 70 percent of Particles on at least 2 faces.
Unfractured Particles:
3/8 inch and larger: 10% maximum
Smaller than 3/8 inch: 5% maximum
Gradation:Even from Coarse to Fine.
Maximum Size:
At Pipe Beds and Pipe Zones: 3/4 inch
At Backfills: 1-1/2 inches
PEA GRAVEL:
Round, water-worn, washed, sound, durable, uniform, Maximum Size: 1/2 inch

PAVEMENT JOINTS
General:
Submit Joint Layout Drawings for Owner's Representative's approval. Layout Joints in accordance with approved Drawings.
Form to true, straight lines, with Slabs flush at joints.
CONCRETE WALKS, GUTTERS & CURBS
Follow Standard Specification for Cold and Warm Weather Concreting, ACI 306.1
Reinforcing: Grade: 60, unless otherwise shown on Drawings.
Extent of Work: Unless otherwise shown on Drawings, provide the following:
One #4 Bar continuously in both top and bottom of each Cast-in-place Concrete Curb.
One #4 Bar continuously in top, bottom, and toe of each Concrete Gutter.
PORTLAND CEMENT
Manufacturing Standard: ASTM C-150
Type: I-II
AGGREGATE
Maximum Size: 3/4 inch at Exposed Aggregate Flatwork, 1-1/2 inches elsewhere
ENTRAINED AIR
Manufacturing Standard: ASTM C-260
Air Amount: 5% to 7% of Concrete Volume.
Provide in all Concrete.
FLY ASH
Class: F
Used at Contractor's option.
WATER REDUCING ADMIXTURES
Type: A
Used at Contractor's option.
CALCIUM CHLORIDE
None permitted.
DETECTABLE STRIPS FOR WARNING DISABLED PERSONS
Manufacturer: Vanguard, Wausau Tile or approved.
Style: Truncated Dome
Color: Yellow
Comply with U.S. Americans with Disabilities Act (ADA), Where located on Drawings.
CURING COMPOUND
Type: White pigmented, non-yellowing, and disappearing.
Manufacturer & Brand: Contractor's choice
CONCRETE MIXING
General:
Readymix type conforming to ASTM C-94
Assume responsibility for Mix design and Product performance.
Design Strength:
Minimum 28 day compressive strength: 3500 psi
Maximum Slump: 4 inch Slump at any time is maximum.
WALKWAY JOINTS
General:
Make perpendicular to line of Walkway, location in accordance with approved Drawings.
Form to true, straight lines, with Slabs flush at joints.
Construction Joints:
Space Joints no greater than 25 ft. apart.
Provide Expansion Joint Fillers and fill to surface with Expansion Joint Sealing Compound.
Weakened-plane Shrinkage-control Joints:
Over Walk Length: Equally space Joints between 4 ft. min. and 5 ft. max. apart.
Over Walk Width:
At Walks up to 5 ft. wide: No Joints required
At Walks 5 ft & 10 ft. wide: Provide Longitudinal Joint centered in Walk width.
At Walks wider than 10 ft.: Layout Joints in approved pattern.
Joint Depth: 1/3 of Slab thickness
Joint Width: 1/8 inch

Fabric: Install taut, cover full-height of Fence, and extend to within approximately 1 inch above adjacent Ground Surface at Posts.
Join Fabric ends by weaving with single strand of Fabric Wire to form continuous mesh pattern with Selvage twisted to match Fabric.
Gates: Install plumb and level within 1/4 inch in 10 ft.
Install Ground-Set Items in Concrete.

PIPE & FITTINGS: Under Building Foundations & Asphalt Paving:
Material: Cast Iron
Manufacturing Standard: ASTM A-74
Elsewhere: Contractor's choice
Type & Size: Satisfy conditions of use.
Quantity: Provide all required for complete and properly operating System.
CLEANOUTS
Manufacturer: Contractor's choice
Type: Satisfy Conditions of use
CULVERT PIPE
Reinforced Concrete:
Class: 3
Wall-Type: B
End Pattern: Bell & Spigot
Steel:
Material: Galvanized Steel
Pattern: Corrugated
Shape: Contractors Choice
Minimum Metal Thickness: 16 ga.
Seams: Annular
STEEL CATCH BASINS
Manufacturer: Contractors Choice
Material: 10 ga. Steel
Exterior & Interior Coating: Asphalt
Opening Size: 24x24 inches, unless otherwise shown on Drawings
Outlet Sizes & Depth: Satisfy conditions of use.
PLASTIC AREA DRAINS
Drain Manufacturer & Brand: Contractor Choice
Drain Material: Black Plastic with Outlets for Drain connections
Grate Manufacturer: GRS, or approved.
Grate Material: Black Plastic complying with CS 288
Drain Diameter: 6 inches
Drain Depth: 8 inches

32 EXTERIOR IMPROVEMENTS
ASPHALT PAVING:
SOIL STERILANT:
Type: Recommended by Applicator to satisfy conditions of use, without endangering any adjacent Planting areas.
Provide over Gravel Base to receive Asphaltic Paving.
ASPHALTIC PAVING
Sound, angular, crushed River-run or Quarry Rock with 70% minimum fracture.
Gradation: 1-1/2 inch minus, evenly graded. If and where thickness exceeds 12 inches, provide Bar Run Gravel from underside of 1-1/2 inch Material down to solid bearing.
Minimum Compacted Base Thickness: Drawings
Verify Subgrade elevation and condition.
Proof-roll Subgrade prior to Granular Base placement using fully loaded 10 cu. yd. Dump Truck with dual axle, or approved, to discover any unstable areas or areas requiring additional compaction.
Do not apply Granular Base when Subgrade is not properly graded or compacted.
ALLOWABLE TOLERANCES
In-place Compacted Thickness:
Granular Base: Within 0.05 ft. above and 0.02 ft. below specified thickness
Surface Smoothness:
Measured parallel with and at right angles to Pavement centerlines using 12 ft. Straightedge:
0.02 ft. plus or minus
PORTLAND CEMENT CONCRETE PAVING:
Follow Standard Specification for Cold and Warm Weather Concreting, ACI 306.1
Place no Concrete until Subgrade, Formwork, and Reinforcement have been inspected.
REINFORCEMENT BARS
Material: Steel
Manufacturing Standard: ASTM A-615
Grade: 60, unless otherwise shown on Drawings.
Sizes & Locations: See Drawings
PORTLAND CEMENT
Manufacturing Standard: ASTM C-150
Type: I-II
AGGREGATE
Manufacturing Standard: ASTM C-33
Maximum Size: 1-1/2 inch
WATER REDUCING ADMIXTURES
Manufacturing Standard: ASTM C-494
Type: A
Used at Contractor's option
CALCIUM CHLORIDE
Not permitted
ENTRAINED AIR
Manufacturing Standard; ASTM C-260
Air Amount: 5%, plus or minus 1-1/2%, of Concrete Volume.
CONCRETE MIXING
General: Readymix type conforming to ASTM C-94
Assume responsibility for Mix design and Product performance.
Design Strength:
Minimum 28 day compressive strength: 4000 psi
Minimum Cement Content per cu. yd. of Concrete: 564 lbs
CONCRETE PLACING
Convey and place by methods which will prevent Material separation and loss.
Do not retemper or use set Concrete.
If placing 2 consecutive Concrete Batches, stop Paving operations and separate Batches with Construction Joint.
Minimum Concrete Placement Width: 1 full Traffic Lane, unless otherwise approved by Owner's Representative.
Using suitable Vibrating Equipment, consolidate Concrete without segregation.

CURB & GUTTER JOINTS
Construction Joints:
Maximum Spacing: 15 ft. apart
Expansion Joints:
Maximum Spacing: 45 ft. apart
STAMP-PATTERNED CONCRETE PAVEMENT
SYSTEM DESCRIPTION
Specified System is patented by Bomanite Corp.; Madera, CA 93639; (209) 673-2411.
Concrete as indicated in PORTLAND CEMENT CONCRETE PAVING
Pattern: While Concrete is still plastic, imprint Concrete surface with pattern.
CHAIN LINK FENCING
PURPOSE
Provide only for on-site security during demolition and construction. At Substantial Completion, remove fencing and complete site work to intended final condition.
POSTS & FRAMES
Zinc-coated Steel: 7 mil thick PVC thermally-fused to Wire
Color: See Color Schedule on Drawings.
Shape: Round
Diameter: Line Posts: 2-3/8 inches o.d.
Top & Brace Rails: 1.66 inches o.d.
Terminal Posts: 2 -7/8 inches o.d.
Fence Height: 72 inches
Required Brace Locations: Between Post tops, Gate Posts, End Posts, Pull Posts
Corner Posts, including adjustable, diagonal, 3/8 inch diameter Tension Rods.
Tension Cables between Posts: top and bottom.
GATES
Material: Match Posts and Frames.
Type: Double Leaf and Single Leaf
Gate Frame Section Shape: Round
Corner Fittings: Manufacturer's standard for conditions of use
Bracing: Adjustable, 3/8 inch diameter, diagonal Tension Rod
Swinging Gate Hinges:
Type: Non-lift-off
Quantity: 1½ pr.
Swinging Gate Required Accessories:
Latching DevicesType:
At Double Gates: Plunger
At Single Gates: Fork
Operable from either side of Gate
Wheels on ends
Hold-open Keepers on Gates over 5 ft. wide
Provisions for Padlocking
FABRIC Material: 9ga. Steel Wire
Coating: 7 mil thick PVC thermally-fused to Wire
Mesh Opening Size: 2 inches square
Selvage: Knuckled top and bottom
SLATS Material: Vinyl Plastic
Size: Fit Fabric Mesh openings.
Provide Slats in all Fencing.

INSTALLATION
General:
Install rigid, plumb, true, in perfect alignment,
Posts: Set plumb to 1/4 inch in 10 ft. and not more than 10 ft. apart.
In Ground:
Set not less than 36 inches deep into 12-inch diameter Concrete Footings; not less than 4 inches of Concrete below Post bottom.
Remove excess Earth or spread on Site.

33 UTILITIES
UNDERGROUND WATER SUPPLY SYSTEM
PIPE INSTALLATION
General:Follow Manufacturer's instructions and Regulatory Agency requirements.
Joints:
Install without Joints where possible; no Joints within 10 ft. of Sanitary Sewer Line.
Make necessary Joints watertight.
At Joint between Dissimilar Materials, if any: Use Insulated Unions
Tolerances: Locate within 1/4 inch of indicated grade and location
SYSTEM DISINFECTION: After flushing, but prior to placing System into service, disinfect System as specified in AWWA C-651.
PRESSURE TESTS per governing Regulatory Agency requirements.
Conduct prior to disinfecting and concealing Pipe.
MATERIALS:
PIPE & FITTINGS: Contractor's choice
Type & Size: Satisfy conditions of use.
Quantity: Provide all required for complete and properly operating System.
UNDERGROUND SANITARY SEWER SYSTEM
PIPE INSTALLATION
General: Follow Manufacturer's instructions and Regulatory Agency requirements.
Joints:
Install without Joints where possible;
Make necessary Joints watertight.
At Joint between Dissimilar Materials, if any: Use Insulated Unions
Tolerances: Locate within 1/4 inch of indicated grade and location
PRESSURE TESTS per governing Regulatory Agency requirements.
MATERIALS:
PIPE & FITTINGS: Contractor's choice
Type & Size: Satisfy conditions of use.
Quantity: Provide all required for complete and properly operating System.
CLEANOUTS
Manufacturer & Brand: Contractor's choice, Satisfy Conditions of use
Body Material: Match adjacent Sewer Pipe
Vertical Section Diameter: Match adjacent Pipe size
Cover Plate Type: Vandal proof
Markers: Provide permanent, labeled Marker directly above any buried or concealed Cleanouts.

MANHOLES
Material:
Base: Reinforced, cast-in-place Concrete
Walls: Precast Concrete
Frames & Lids: Cast Iron
Manufacturing Standard: ASTM C-478
Joints: T&G
Diameter, unless otherwise shown on drawings: 42 inches
Pipe Inlets and Outlets: Water tight
Cover Label: Cast the word "SEWER" into Cover face with 2 inch high raised letters
Ladder Rungs:
Material: Galvanized Steel conforming to ASTM A-386
Extent of Rungs: Extend from Manhole top to bottom at 12 inch maximum spacings.
UNDERGROUND STORM SEWER SYSTEM
PIPE INSTALLATION
General: Follow Manufacturer's instructions and Regulatory Agency requirements.
Cast Iron Pipe or Concrete Pipe: Install Pipe Joints with Rubber Rings.
Plastic Pipe: Install with Manufacturer-recommended Fittings using Solvent-weld Joints.
Follow Manufacturer's instructions and Regulatory Agency requirements.
Tolerances: Locate within 1/4 inch of indicated grade and location
MATERIALS:

ARCHITECT
CORALIC, LLC
EDIN CORALIC
9700 MACKENZIE ROAD, STE. 222,
ST. LOUIS, MO 63123
p: 314.578.4953
e: edin@coralicarchitecture.com
STRUCTURAL ENGINEER
JAMES C. KREHER
JIM KREHER
208 N. MAIN STREET,
COLUMBIA, IL 62236
p: 618.281.8505
jimk@kreherengineering.com
MEP ENGINEER
Case Engineering
DARRELL R. CASE
796 MERUS CT.,
FENTON, MO 63026
T. 636.349.1600 F. 636.349.1730
dcase@caseengineeringinc.com

EDIN CORALIC ARCHITECT
A-2013031004 - EXP. 12-31-2021

STATE OF MISSOURI
EDIN CORALIC
NUMBER
A-2013031004
ARCHITECT
10.11.2021

MISSOURI CERTIFICATE OF AUTHORITY NO. 2013041393

Project No: MO0102
Dutch Bros Coffee - New Freestanding Store
500 NW Chipman Road, Lee's Summit, Missouri 64086
for: Dutch Bros Coffee
110 SW 4th St.
Grants Pass, OR 97526

ISSUED FOR PERMIT:
10.11.2021

REV:	DATE:	DESCRIPTION:

SHEET NAME:
SPECIFICATIONS

SHEET NUMBER:
G1.5

© 2020 DB Franchising USA, LLC

PROJECT DIRECTORY

OWNER / DEVELOPER
TM CROWLEY
501 PENNSYLVANIA PARKWAY SUITE 160
INDIANAPOLIS, IN 46280
(317) 705-8800

CIVIL ENGINEER
PREMIER DESIGN GROUP
100 MIDLAND PARK DRIVE
WENTZVILLE, MO 63385
314-925-7444
CONTACT: MATT FOGARTY

MUNICIPALITY
CITY OF LEE'S SUMMIT
200 SE GREEN
LEE'S SUMMIT, MO 64063
(816) 969-1200
CONTACT: DEVELOPMENT SERVICES DEPARTMENT

UTILITY PROVIDERS

WATER
CITY OF LEE'S SUMMIT WATER
1200 SE HAMBLEN RD
LEE'S SUMMIT, MO 64081
(816) 969 1900
CONTACT: T.B.D.

ELECTRIC
EVERGY
1351 NW WARD RD
LEE'S SUMMIT, MO 64086
(888) 471-5275
CONTACT: RON DEJARNETTE

GAS
SPIRE
1117 S. PLEASANT ST
INDEPENDENCE, MO 64050
(800) 582-1234
CONTACT: T.B.D.

TELEPHONE
AT&T BUSINESS COMMUNICATION SERVICES
(618) 346-6400
CONTACT: T.B.D.

FIRE DEPARTMENT
CITY OF LEE'S SUMMIT FIRE PROTECTION
207 E. DOUGLAS BLVD
LEE'S SUMMIT, MO 64063
(816) 969-1313
CONTACT: MIKE SNIDER - FIRE CHIEF

SANITARY SEWER
CITY OF LEE'S SUMMIT SEWER
1200 SE HAMBLEN ROAD
LEE'S SUMMIT, MO 64081
(816) 969 1900
CONTACT: T.B.D.

CABLE
SPECTRUM
188 NW OLDHAM PKWY
LEE'S SUMMIT, MO 64081
(874) 874 2389
CONTACT: T.B.D.

FINAL DEVELOPMENT PLAN FOR DUTCH BROS Coffee

500 NW CHIPMAN RD.

ALL OF LOT 4C, SUMMIT ORCHARD, LOT 4C-1, 4C-2 AND 4C-3, CORRECTED SUMMIT ORCHARD, LOTS 4A-4E, A SUBDIVISION IN LEE'S SUMMIT, JACKSON COUNTY, MISSOURI.

LOCATION MAP
1" = 250'

DISTURBED AREA = 0.73 ACRES

SHEET INDEX

C-000	COVER SHEET
C-001	GENERAL NOTES
C-100	SITE PLAN
C-200	GRADING PLAN
C-300	UTILITY PLAN
C-400	INITIAL EROSION CONTROL PLAN
C-401	FINAL EROSION CONTROL PLAN
C-402	EROSION CONTROL DETAILS
C-500	STORM SEWER PROFILES
C-600	CONSTRUCTION DETAILS
C-601	CONSTRUCTION DETAILS
C-700	UTILITY DETAILS
C-800	EXISTING DRAINAGE AREA MAP
C-801	STORMWATER MANAGEMENT PLAN
L-100	LANDSCAPE PLAN
E0.01	ELECTRICAL SITE & PHOTOMETRIC PLAN

PROPERTY DATA

OVERALL SITE ACREAGE	±0.828 ACRES
ADDRESS	500 NW CHIPMAN RD.
PARCEL ID#	52-900-03-42-00-0-00-000
EXISTING ZONING	PMIX - PLANNED MIXED USE
CURRENT LAND USE	VACANT COMMERCIAL PROPERTY
PROPOSED LAND USE	COMMERCIAL

LEGAL DESCRIPTION:

ALL OF LOT 4C, SUMMIT ORCHARD, LOT 4C-1, 4C-2 AND 4C-3, CORRECTED SUMMIT ORCHARD, LOTS 4A-4E, A SUBDIVISION IN LEE'S SUMMIT, JACKSON COUNTY, MISSOURI.

SITE COVERAGE CALCULATIONS

SITE AREA = ±0.828 ACRES / 36,067.68 S.F.
FLOOR TO AREA RATIO
950/36,068 = 0.026 FAR

EXISTING IMPERVIOUS AREA PARKING LOT AND BUILDING
0.046 ACRES OF PAVEMENT
0.00 ACRES OF BUILDING

EXISTING GREEN SPACE
0.782 ACRES

EXISTING PERCENT OF IMPERVIOUS AREA COVERAGE = 5.56%

PROPOSED IMPERVIOUS AREA PARKING LOT AND BUILDING
0.540 ACRES OF PAVEMENT
0.022 ACRES OF BUILDING

PROPOSED GREEN SPACE
0.266 ACRES OF GREEN SPACE

PROPOSED PERCENT OF IMPERVIOUS AREA COVERAGE = 67.87%

COORDINATE DATA:

PER ST. JACKSON COUNTY REGULATIONS, COORDINATE VALUE ARE SHOWN IN U.S. FEET AND ALL BEARINGS ARE GRID BEARINGS. ALL DISTANCES ARE GROUND DISTANCES.
N: X,XXX,XXX.XXX USft. (in U.S. FEET)
E: XXX,XXX.XXX USft. (IN U.S. FEET)
PER MISSOURI COORDINATE SYSTEM 1983, WEST ZONE (ZONE NO. 2403)
GRID FACTORS = 0.99899480

BEARINGS ADOPTED:

BASIS OF BEARINGS IS THE STATE PLANE COORDINATE SYSTEM (SPCS) NAD 83 (2011) WEST ZONE

ELEVATION ADOPTED:

THE ELEVATIONS WERE ESTABLISHED USING THE MISSOURI DEPARTMENT OF TRANSPORTATION'S VRS, RTK SYSTEM AND IS REFERENCED TO THE NAVD 88 DATUM WITH GEOID 18.

EXISTING LEGEND

Symbol	Description
	FOUND IRON PIPE
	SET IRON PIPE
	FOUND STONE MONUMENT
	FIRE HYDRANT
WV	WATER VALVE
W	WATER METER VAULT
ICV	IRRIGATION CONTROL VALVE
GV	GAS VALVE
G	GAS METER
	LIGHT STANDARD
CO	CLEAN OUT
S	SANITARY SEWER MANHOLE
	STORM SEWER MANHOLE
	STORM SEWER INLET
BLRD	PIPE BOLLARD
	SIGN
	BUSH
	TREE
TSB	TRAFFIC SIGNAL BOX
MW	MONITORING WELL
TH	TEST HOLE
PS	PEDESTRIAN SIGNAL
E	ELECTRIC METER
	STORM CURB INLET
	STORM DOUBLE CURB INLET
AC	AIR CONDITIONER
DS	DOWN SPOUT
TEL	TELEPHONE PEDESTAL
B.O.C.	BACK OF CURB

PROPOSED LEGEND

Symbol	Description
	UTILITY POLE
	FIRE HYDRANT
	WATER VALVE
	WATER METER VAULT
	GAS METER
	LIGHT STANDARD
	CLEAN OUT
	MONITORING WELL
	SANITARY SEWER MANHOLE
	STORM SEWER MANHOLE
	GRATE INLET
	DOUBLE CURB INLET
	PIPE BOLLARD
	SIGN
	ELECTRIC METER
—UgE—	UNDERGROUND ELECTRIC
—UgT—	UNDERGROUND TELEPHONE
—OHE—	OVERHEAD ELECTRIC/PHONE
—2"W—	2" WATER MAIN
—6"W—	6" WATER MAIN
—8"W—	8" WATER MAIN
—X" GAS—	GAS LINE
—507—	CONTOUR LINE

UNDERGROUND UTILITIES AND OSHA SAFETY NOTE:

Underground utilities and structures have been plotted from available information and therefore, their location must be considered approximate only. It is the responsibility of the individual contractors to notify the utility companies before actual construction. All O.S.H.A rules and regulations established for the type of construction required by these plans shall be strictly followed (ie. trenching, blasting, etc.)

\\Vault-pc\vault\CIVIL 3D PROJECTS\2021\2109720_TMC_Dutch_Lee Summit\ENGINEERING\CONSTRUCTION DRAWINGS\SHEETS\C-000 COVER SHEET.dwg

PREMIER DESIGN GROUP
100 MIDLAND PARK DRIVE
WENTZVILLE, MO 63385

ELECTRONIC DRAWING NOTE:
ELECTRONIC MEDIA OR DIGITAL DRAWINGS ARE INSTRUMENT OF PROFESSIONAL SERVICES. OWNERSHIP OF SUCH WILL BE RETAINED BY THE CIVIL ENGINEER AND MAY NOT BE RELEASED TO CONTRACTORS. CONTRACTORS ARE ADVISED TO CREATE BIDS BASED ON THE USE OF PAPER COPIES OF THE PLANS.

PREMIER DESIGN GROUP
100 MIDLAND PARK DRIVE
WENTZVILLE, MO 63385
MISSOURI CERTIFICATE OF AUTHORITY #E-2011000031
MISSOURI CERTIFICATE OF AUTHORITY #LS-2012007849

STATE OF MISSOURI
STEVE MARION
NUMBER
PE2006007195
PROFESSIONAL ENGINEER
10/5/2021

ENGINEERS AUTHENTICATION
The responsibility for professional engineering liability on this project is hereby limited to the set of plans authenticated by the seal, signature, and date hereunder attached. Responsibility is disclaimed for all other engineering plans involved in this project and specifically excludes revisions after this date unless reauthenticated.
STEVEN D. MARION P.E.
PROFESSIONAL ENGINEER
PE 2006007195

Project
DUTCH BROS
LEE'S SUMMIT, MO
500 NW CHIPMAN RD.
LEE'S SUMMIT, MO 64086
TM CROWLEY
501 PENNSYLVANIA PARKWAY SUITE 160
INDIANAPOLIS, IN 46280

Date: 9-30-2021

#	Revision Date	Description of Changes

Sheet Title: COVER SHEET

Sheet Number: C-000

Project No.	2109720
Drawn By	A. JONES
Checked By	M. FOGARTY

NOT RELEASED FOR CONSTRUCTION

PAVING, GRADING, AND DRAINAGE NOTES:

1. ALL PAVING, CONSTRUCTION MATERIALS, AND WORKMANSHIP WITHIN CITY RIGHT-OF-WAY SHALL BE IN ACCORDANCE WITH THE CITY OF LEE'S SUMMIT.
2. ALL AREAS IN EXISTING RIGHTS-OF-WAY DISTURBED BY SITE CONSTRUCTION SHALL BE RE-GRADED AND LANDSCAPED OR PAVED, (WHATEVER WAS THERE BEFORE DISTURBANCE). ALL DISTURBED AREAS SHALL BE REPAIRED TO THE PREVIOUS CONDITION OR BETTER THAN BEFORE AREA WAS DISTURBED.
3. TRAFFIC CONTROL ON ALL STATE, CITY AND COUNTY RIGHTS-OF-WAY SHALL MEET THE REQUIREMENTS OF THE MANUAL OF UNIFORM TRAFFIC CONTROL DEVICES (U.S. DOT/FHA) AND THE REQUIREMENTS OF THE STATE AND ANY LOCAL AGENCY HAVING JURISDICTION . IN THE EVENT THAT THE CONTRACT DOCUMENTS AND THE JURISDICTIONAL AGENCY REQUIREMENTS ARE NOT IN AGREEMENT, THE MOST STRINGENT SHALL GOVERN.
4. THE CONTRACTOR SHALL GRADE THE SITE TO THE ELEVATIONS INDICATED AND SHALL RE-GRADE ANY WASHOUTS WHERE THEY OCCUR AFTER EVERY RAINFALL EVENT UNTIL SOIL IS STABILIZED.
5. ALL AREAS INDICATED AS PAVEMENT SHALL BE CONSTRUCTED IN ACCORDANCE WITH THE TYPICAL PAVEMENT SECTIONS AS INDICATED ON THE DRAWINGS AND THE PROJECT SPECIFICATIONS.
6. WHERE EXISTING PAVEMENT IS INDICATED TO BE REMOVED AND REPLACED, THE CONTRACTOR SHALL SAW CUT TO FULL DEPTH OF EXISTING PAVEMENT. CONTRACTOR SHALL PREPARE A SMOOTH, SOUND, VERTICAL FACE AND MATCH THE EXISTING PAVEMENT ELEVATION UNLESS OTHERWISE NOTED. CONTRACTOR SHALL INSTALL LONGITUDINAL BUTT JOINTS WHEN CONNECTING TO EXISTING CONCRETE PAVEMENT.
7. THE CONTRACTOR SHALL ENSURE THAT ALL PLANTING AREAS ARE NOT OVERLY COMPACTED AND DO NOT CONTAIN LIMEROCK. THE CONTRACTOR SHALL EXCAVATE AND REMOVE ALL UNDESIRABLE MATERIAL FROM ALL AREAS ON THE SITE TO BE PLANTED.
8. ALL DRAINAGE STRUCTURES SHALL BE DE-SILTED AS REQUIRED DURING AND AT THE END OF CONSTRUCTION TO PROVIDE POSITIVE DRAINAGE FLOWS.
9. STRIP TOPSOIL AND ORGANIC MATTER AND PAVING MATERIAL FROM ALL AREAS UNDER BUILDING. TOPSOIL MAY BE STOCKPILED ON SITE FOR REPLACEMENT IN GREEN AREAS.
10. FIELD DENSITY TESTS SHALL BE TAKEN AT A FREQUENCY AS REQUIRED IN THE PROJECT SPECIFICATIONS.
11. BEFORE PLACING PAVEMENT, CONTRACTOR SHALL VERIFY THAT SUITABLE HANDICAPPED ROUTES (PER A.D.A. REQUIREMENTS) EXIST TO AND FROM EVERY ACCESSIBLE DOOR. IN NO CASE SHALL HANDICAP RAMP SLOPES EXCEED 1 VERTICAL TO 12 HORIZONTAL. IN NO CASE SHALL SIDEWALK CROSS SLOPES EXCEED 2.0 PERCENT. IN NO CASE SHALL LONGITUDINAL SIDEWALK SLOPES EXCEED 5.0 PERCENT. CONTRACTOR SHALL CONTACT ARCHITECT AND CIVIL ENGINEER PRIOR TO PAVING IF ANY EXCESSIVE SLOPES ARE ENCOUNTERED. NO CONTRACTOR CHANGE ORDERS WILL BE ACCEPTED FOR A.D.A. COMPLIANCE ISSUES.
12. CONTRACTOR ADJUSTMENT TO SPOT GRADES TO MAINTAIN POSITIVE DRAINAGE IS ALLOWED, ONLY WITH THE PRIOR APPROVAL OF THE CIVIL ENGINEER. CONTRACTOR SHALL CONTACT THE CIVIL ENGINEER PRIOR TO PAVING IF ANY AREAS OF POOR DRAINAGE ARE ENCOUNTERED.
13. SPOT ELEVATIONS SHOWN ARE TO TOP OF PAVING SURFACE OR FINISHED EARTH GRADE UNLESS NOTED OTHERWISE. WHERE APPLICABLE, ADD 0.50 FEET TO SPOT GRADES SHOWN FOR TOP OF CURB ELEVATIONS.
14. THE CONTRACTOR TAKE ALL MEASURES NECESSARY TO CONTROL TURBIDITY, INCLUDING BUT NOT LIMITED TO, THE INSTALLATION OF BMP'S AT ALL LOCATIONS WHERE THE POSSIBILITY OF TRANSFERRING SUSPENDED SOLIDS INTO THE RECEIVING WATER BODY EXISTS DUE TO THE PROPOSED WORK. BMP'S MUST BE MAINTAINED IN EFFECTIVE CONDITION AT ALL LOCATIONS UNTIL CONSTRUCTION IS COMPLETED AND DISTURBED SOIL AREAS ARE STABILIZED. THEREAFTER, THE CONTRACTOR MUST REMOVE THE TEMPORARY BARRIERS, AT NO TIME SHALL THERE BE ANY OFF-SITE DISCHARGE WHICH VIOLATES LOCAL, STATE, OR FEDERAL WATER QUALITY STANDARDS.
15. THE CONTRACTOR MUST REVIEW AND MAINTAIN A COPY OF THE STORM WATER PERMIT COMPLETE WITH ALL CONDITIONS, ATTACHMENTS, EXHIBITS, AND PERMIT MODIFICATIONS, IN GOOD CONDITION, AT THE CONSTRUCTION SITE. THE COMPLETE PERMIT MUST BE AVAILABLE FOR REVIEW UPON REQUEST BY JURISDICTIONAL AGENCIES.
16. IF ANY EXISTING STRUCTURES, FACILITIES, OR IMPROVEMENTS (PUBLIC OR PRIVATE) TO REMAIN ARE DAMAGED DURING CONSTRUCTION, IT SHALL BE THE CONTRACTOR'S RESPONSIBILITY TO REPAIR AND/OR REPLACE THE EXISTING STRUCTURE, FACILITY, OR IMPROVEMENT AS NECESSARY TO RETURN IT TO EXISTING CONDITIONS OR BETTER.
17. REFERENCE THE SWPPP INCLUDED IN THIS PLAN SET AND IN THE PROJECT SPECIFICATIONS FOR THIS PROJECT.
18. CONTRACTOR SHALL REFERENCE ARCHITECT AND ELECTRICAL PLANS AND PROVIDE CONDUIT NEEDED FOR LOT LIGHTING AND SIGNAGE PRIOR TO SITE PAVING.
19. PAVING LINE AND GRADE SHALL "FLUSHOUT" ALONG ALL CONNECTIONS TO EXISTING PAVING.
20. ALL BENDS LESS THAN 42" DIAMETER MUST BE FACTORY MANUFACTURED BENDS.
21. ALL WORK SHALL BE DONE IN COMPLIANCE WITH THE PROJECT GEOTECHNICAL SERVICE REPORT FOR THIS SITE.
22. PAVING CONTRACTOR IS RESPONSIBLE FOR ALL LAY DOWN CURBS AT INTERSECTIONS WHERE BARRIER FREE RAMPS ARE TO BE CONSTRUCTED.
23. REFERENCE DETAIL SHEETS FOR PAVEMENT JOINT SPACING AND REQUIREMENTS. ALL SAWCUT AND JOINT LOCATIONS WILL BE AS REQUIRED BY THE CITY OF LEE'S SUMMIT INSPECTOR.
24. PRIVATE STORM PIPE MATERIAL SHALL BE PER CITY OF LEE'S SUMMIT SPECIFICATIONS.
25. ALL ELEVATIONS SHOWN ON THE GRADING PLAN ARE TO TOP OF PAVEMENT OR FINISHED GROUND UNLESS NOTED OTHERWISE. ELEVATIONS TO POINTS OTHER THAN THE TOP OF PAVEMENT ARE NOTED AS FOLLOWS:

    TP=TOP OF PAVEMENT
    TC=TOP OF CURB
    TW=TOP OF WALL
    BW=FINISHED GROUND AT FACE OF WALL
    GRND=FINISHED GROUND AT YARD DRAINS, TOP OF FINISHED GRADE IN NON-PAVEMENT AREAS

GRADING PLAN NOTES:

1. THE CONTRACTOR SHALL RESTORE OFFSITE CONSTRUCTION AREAS TO AN EQUAL OR BETTER CONDITION THAN EXISTED PRIOR TO COMMENCEMENT OF CONSTRUCTION.
2. ALL GRADES SHALL BE WITHIN 0.1 FEET MORE OR LESS OF THOSE SHOWN ON THE GRADING PLAN.
3. NO SLOPE SHALL BE GREATER THAN 3:1 AND SHALL BE EITHER SODDED OR SEEDED AND MULCHED UNLESS OTHERWISE NOTED OR DETAILED.
4. THE CONTRACTOR SHALL FIELD INVESTIGATE THE ENTIRE SITE PRIOR TO HIS BID SUBMITTAL NOTING THE EXISTING VEGETATION, PAVEMENT AREAS, BUILDING MATERIALS, BUILDING MATERIAL TYPES, PARKING LIGHTING, UTILITIES AND TREES. THE REMOVAL AND DISPOSAL OF ALL ITEMS SHALL BE INCLUDED IN THE BID.
5. NO AREA SHALL BE CLEARED WITHOUT PERMISSION OF THE OWNER/DEVELOPER. SILTATION CONTROL WILL BE PROVIDED AS REQUIRED TO PREVENT RUN-OFF. REFER TO THE EROSION CONTROL PLAN(S) AND DETAILS.
6. ALL TRASH, DEBRIS, ORGANIC MATERIAL, REFUSE, FROZEN EARTH, ETC., SHALL BE REMOVED FROM FILL AREAS PRIOR TO THE PLACEMENT OF CONTROLLED FILL. ALL FILLS AND BACKFILLS SHALL BE MADE OF SELECTED EARTH MATERIALS, FREE FROM BROKEN MASONRY, ROCK, FROZEN EARTH, RUBBISH, ORGANIC MATERIAL AND DEBRIS.
7. THE CONTRACTOR SHALL PROVIDE EROSION CONTROL PER THE EROSION CONTROL PLAN(S) AND MAY BE REQUIRED TO PROVIDE ADDITIONAL MEASURES AS REQUESTED BY THE CITY OF LEE'S SUMMIT, SHOULD THE EROSION CONTROL PLAN AND DETAILS PROVE TO BE INSUFFICIENT DUE TO UNFORESEEN CIRCUMSTANCES.
8. CARE SHALL BE EXERCISED IN COMPACTION OF BACKFILL MATERIALS OVER THE TOP OF STRUCTURES OR PIPES IN ORDER TO PREVENT DAMAGE TO THE WATERPROOFING MEMBRANES, JOINTS, SEALS AND/OR THE PIPES AND STRUCTURES THEMSELVES. COMPACTION AND PLACING OF BACKFILL AND FILL MATERIALS SHALL BE PERFORMED UNDER THE CONTINUOUS SUPERVISION OF AN APPROVED TESTING LABORATORY. FILL SHALL NOT BE PLACED ON FROZEN GROUND, NOR SHALL FILLING OPERATIONS CONTINUE WHEN THE TEMPERATURE IS SUCH AS TO PERMIT THE LAYER UNDER PLACEMENT TO FREEZE.
9. ALL CITY, COUNTY, AND STATE ROADS SHALL BE KEPT FREE OF DIRT DAILY.
10. FINAL GRADES SHALL MATCH EXISTING ELEVATIONS AT THE LAND DISTURBANCE LIMITS UNLESS OTHERWISE SHOWN.
11. THE DEVELOPER IS REQUIRED TO PROVIDE ADEQUATE STORM WATER SYSTEMS IN ACCORDANCE WITH THE CITY OF LEE'S SUMMIT AND EPA STANDARDS.
12. ALL GRADING AND DRAINAGE TO BE IN CONFORMANCE WITH THE CITY OF LEE'S SUMMIT AND EPA STANDARDS.
13. INTERIM STORM WATER DRAINAGE CONTROL IN THE FORM OF SILTATION CONTROL MEASURES ARE REQUIRED.
14. ANY LAND DISTURBANCE ACTIVITY INVOLVING ONE (1) ACRE OR MORE OF LAND IS A MAJOR LAND DISTURBANCE (MLD) AND A LAND DISTURBANCE FOR THE MLD MUST BE OBTAINED FROM THE DEPARTMENT OF PUBLIC WORKS. ANY LAND DISTURBANCE ACTIVITY INVOLVING LESS THAN ONE (1) ACRE IS AN ORDINARY LAND DISTURBANCE AND THE APPROPRIATE PERMIT(S) MUST BE OBTAINED FROM THE DEPARTMENT OF PUBLIC WORKS.
15. G.C. TO BE AWARE THAT A LAND DISTURBANCE PERMIT WILL BE REQUIRED. SITE PLAN/PLAT APPROVAL IS NOT TO BE CONSTRUED AS APPROVAL OF A LAND DISTURBANCE PERMIT.
16. ALL WORK SHALL BE IN COMPLIANCE WITH THE PROJECT GEOTECHNICAL SERVICES REPORT FOR THIS PROJECT.
17. ANY DISTURBED SIDEWALK OR CONCRETE PAVEMENT AREAS SHALL BE REPAIRED BY FULL SLAB REPLACEMENT UNLESS SPECIFICALLY AUTHORIZED BY THE DEVELOPER OR MUNICIPALITY HAVING JURISDICTION.
18. ALL UTILITY SPOILS SHALL BE INCLUDED IN THE GENERAL CONTRACTOR'S BID. GENERAL CONTRACTOR SHALL COORDINATE WITH THE EXCAVATOR AND UTILITY INSTALLER.

ADA COMPLIANCE NOTES:

1. CONTRACTOR SHALL CONFIRM ALL EXISTING SLOPES FOR ACCESSIBLE ROUTES AS WELL AS THE ACCESSIBLE PARKING STALLS AND ACCESSIBLE AISLES WITH A SLOPE METER TO CONFIRM MAXIMUM SLOPES ARE NOT EXCEEDED.
2. CONTRACTOR IS REQUIRED TO PROVIDE AS-BUILT SPOT ELEVATIONS ALONG THE ACCESSIBLE ROUTES SHOWN ON THIS PLAN EVERY 10 FEET IN ORDER TO CONFIRM MAXIMUM (2%) CROSS-SLOPE AND MAXIMUM (5%) SLOPES IN THE DIRECTION OF TRAVEL. IN ADDITION, SPOT ELEVATIONS ARE REQUIRED ON ALL CORNERS AND MIDPOINTS OF ACCESSIBLE PARKING STALLS AND ACCESSIBLE AISLES TO CONFIRM MAXIMUM 2% SLOPES ARE NOT EXCEEDED IN ALL DIRECTIONS. THIS INFORMATION SHALL BE PROVIDED, A MINIMUM OF 2 WEEKS BEFORE STORE TURNOVER.
3. THE GENERAL AND CONCRETE CONTRACTOR SHALL FIELD VERIFY ADA SLOPES DURING CONCRETE POUR. A 2' SMART LEVEL WITH AN ACCURACY TO .029 PERCENT SHALL BE USED FOR VERIFYING SLOPES. ANY SLOPES IN THE ADA AREAS THAT EXCEED A 2% CROSS SLOPE ALONG THE BUILDING, ADA STALLS AND/OR SIDEWALK, 5% RUNNING SLOPE FOR SIDEWALKS AWAY FROM THE PROPOSED PETSUITES BUILDING, AND EXCEED 8.3% ON RAMPS SHALL BE REMOVED AND REPLACED AT THE CONCRETE CONTRACTOR'S EXPENSE. THE SURVEYOR FOR STAKING CAN PROVIDE A REFERENCE FOR ELEVATION HOWEVER CONFIRMATION IS REQUIRED BY SLOPE LEVEL DURING CONSTRUCTION.

ABBREVIATIONS:

AI............ AREA INLET (OPEN 4 SIDES UNLESS NOTED OTHERWISE)
DAI.......... DOUBLE AREA INLET (OPEN 6 SIDES UNLESS NOTED OTHERWISE.)
MH.......... MANHOLE
CI.......... CURB INLET
DCI.......... DOUBLE CURB INLET
GSI.......... GRATE INLET WITH SIDE INTAKE. (ELEVATION OF INLET TOP IS TO THE TOP OF GRATE, ADD 0.50' FOR TOP OF SIDE INTAKE.)
2GSI........ 2 GRATE INLET WITH SIDE INTAKE. (ELEVATION OF INLET TOP IS TO THE TOP OF GRATE, ADD 0.50' FOR TOP OF SIDE INTAKE.)
DME........ ADS DOME
EP............ END OF PIPE
FES............ FLARED END SECTION
IMH......... INTERCEPTOR MANHOLE
TD........... TRENCH DRAIN
ATG......... ADJUST TO GRADE
*............. DENOTES HYDRAULIC GRADE JUMP
TBR.......... TO BE REMOVED
TBR&R..... TO BE REMOVED & REPLACED

UNDERGROUND UTILITIES AND OSHA SAFETY NOTE:

Underground utilities and structures have been plotted from available information and therefore, their location must be considered approximate only. It is the responsibility of the individual contractors to notify the utility companies before actual construction. All O.S.H.A rules and regulations established for the type of construction required by these plans shall be strictly followed (ie. trenching, blasting, etc.)

\\Vault-pc\vault\CIVIL 3D PROJECTS\2021\2109720_TMC_Dutch_Lee Summit\ENGINEERING\CONSTRUCTION DRAWINGS\SHEETS\C-001 GENERAL NOTES.dwg

GENERAL NOTES:

1. ALL CONSTRUCTION SHALL BE IN ACCORDANCE WITH THE CITY OF LEE'S SUMMIT SPECIFICATIONS, CITY OF LEE'S SUMMIT "STANDARD DETAILS", LATEST EDITION, THE PROJECT SPECIFICATIONS BOOK, AND THESE CONSTRUCTION PLANS. IN CASE OF CONFLICTING SPECIFICATIONS FOR DETAILS, THE CIVIL ENGINEER SHALL BE CONTACTED PRIOR TO CONSTRUCTION, GENERALLY, THE MOST STRINGENT SPECIFICATION SHALL APPLY.
2. DURING THE CONSTRUCTION OF THESE IMPROVEMENTS, ANY INTERPRETATION OF THE STANDARD SPECIFICATIONS, AND ANY MATTER WHICH REQUIRES THE APPROVAL OF THE OWNER, MUST BE APPROVED BY THE CITY OF LEE'S SUMMIT DEVELOPMENT ENGINEER BEFORE ANY CONSTRUCTION INVOLVING THAT DECISION COMMENCES. ASSUMPTIONS ABOUT WHAT THESE DECISIONS MIGHT BE WHICH ARE MADE DURING THE BIDDING PHASE WILL HAVE NO BEARING ON THE DECISION.
3. THE CONTRACTOR SHALL BE RESPONSIBLE FOR FURNISHING ALL MATERIAL AND LABOR TO CONSTRUCT THE FACILITY AS SHOWN AND DESCRIBED IN THE CONSTRUCTION DOCUMENTS IN ACCORDANCE WITH THE APPROPRIATE APPROVING AUTHORITIES, SPECIFICATIONS AND REQUIREMENTS. CONTRACTOR SHALL VISIT THE SITE PRIOR TO BIDDING TO DETERMINE EXISTING CONDITIONS.
4. ALL EXISTING UTILITIES SHOWN ARE LOCATED ACCORDING TO THE INFORMATION AVAILABLE TO THE ENGINEER AT THE TIME THE DRAWINGS WERE PREPARED AND HAVE NOT BEEN INDEPENDENTLY VERIFIED BY THE OWNER OR THE ENGINEER. GUARANTEE IS NOT MADE THAT ALL EXISTING UNDERGROUND UTILITIES ARE SHOWN OR THAT THE LOCATION OF THOSE SHOWN ARE ACCURATE. THE LOCATIONS SHOWN ARE FOR BIDDING PURPOSES ONLY. FINDING THE ACTUAL LOCATION OF ANY EXISTING UTILITIES IS THE CONTRACTOR'S RESPONSIBILITY AND SHALL BE DONE BEFORE HE COMMENCES ANY WORK (INCLUDING ORDERING OF MATERIALS) IN THE VICINITY. FURTHERMORE, THE CONTRACTOR SHALL BE FULLY RESPONSIBLE FOR ANY AND ALL DAMAGES DUE TO THE CONTRACTOR'S FAILURE TO EXACTLY LOCATE AND PRESERVE ANY AND ALL UNDERGROUND UTILITIES. THE OWNER OR CEC WILL ASSUME NO LIABILITY FOR ANY DAMAGES SUSTAINED OR COST INCURRED BECAUSE OF THE OPERATIONS IN THE VICINITY OF EXISTING UTILITIES OR STRUCTURES, NOR FOR TEMPORARY BRACING AND SHORING OF SAME. IF IT IS NECESSARY TO SHORE, BRACE, SWING OR RELOCATE A UTILITY, THE UTILITY COMPANY OR DEPARTMENT AFFECTED SHALL BE CONTACTED BY THE CONTRACTOR AND THEIR PERMISSION OBTAINED REGARDING THE METHOD TO USE FOR SUCH WORK.
5. IT IS THE CONTRACTOR'S RESPONSIBILITY TO CONTACT THE VARIOUS UTILITY COMPANIES WHICH MAY HAVE BURIED OR AERIAL UTILITIES WITHIN OR NEAR THE CONSTRUCTION AREA BEFORE COMMENCING WORK. THE CONTRACTOR SHALL PROVIDE 72 HOURS MINIMUM NOTICE TO ALL UTILITY COMPANIES PRIOR TO BEGINNING CONSTRUCTION. A LIST OF THE UTILITY COMPANIES WHICH THE CONTRACTOR MUST CALL BEFORE COMMENCING WORK IS PROVIDED ON THE COVER SHEET OF THESE CONSTRUCTION PLANS. THIS LIST SERVES AS A GUIDE ONLY AND IS NOT INTENDED TO LIMIT THE UTILITY COMPANIES WHICH THE CONTRACTOR MAY WISH TO NOTIFY.
6. THE CONTRACTOR SHALL BE RESPONSIBLE FOR OBTAINING ALL REQUIRED CONSTRUCTION PERMITS, 3-WAY CONTRACTS, AND BONDS PRIOR TO CONSTRUCTIONS.
7. THE CONTRACTOR SHALL HAVE AVAILABLE AT THE JOB SITE AT ALL TIMES ONE COPY OF THE CONTRACT DOCUMENTS INCLUDING PLANS, SPECIFICATIONS AND SPECIAL CONDITIONS, COPIES OF ANY REQUIRED CONSTRUCTION PERMITS, AND EROSION CONTROL PLANS AND INSPECTION REPORTS (SWPPP).
8. ANY DISCREPANCIES ON THE DRAWINGS SHALL BE IMMEDIATELY BROUGHT TO THE ATTENTION OF THE OWNER & CIVIL ENGINEER BEFORE COMMENCING WORK. NO FIELD CHANGES OR DEVIATIONS FROM DESIGN ARE TO BE MADE WITHOUT PRIOR APPROVAL TO THE OWNER AND NOTIFICATION TO THE ENGINEER. NO CONSIDERATION WILL BE GIVEN TO CHANGE ORDERS FOR WHICH THE OWNER AND CIVIL ENGINEER WERE NOT CONTACTED PRIOR TO CONSTRUCTION OF THE AFFECTED ITEM.
9. ALL COPIES OF COMPACTION, CONCRETE AND OTHER REQUIRED TEST RESULTS ARE TO BE SENT TO THE CIVIL ENGINEER OF RECORD AND THE CITY OF LEE'S SUMMIT DEVELOPMENT ENGINEER DIRECTLY FROM THE TESTING AGENCY.
10. THE CONTRACTOR SHALL BE RESPONSIBLE FOR SUBMITTING TO THE CIVIL ENGINEER AND TO CITY A CERTIFIED RECORD SURVEY SIGNED AND SEALED BY A PROFESSIONAL LAND SURVEYOR REGISTERED IN THE STATE OF MISSOURI DEPICTING THE ACTUAL FILED LOCATION OF ALL CONSTRUCTED IMPROVEMENTS THAT ARE REQUIRED BY THE JURISDICTIONAL AGENCIES FOR THE CERTIFICATION PROCESS. ALL SURVEY COSTS WILL BE THE CONTRACTORS RESPONSIBILITY.
11. ALL NECESSARY INSPECTIONS AND/OR CERTIFICATIONS REQUIRED BY CODES, JURISDICTIONAL AGENCIES AND/OR UTILITY SERVICE COMPANIES SHALL BE PERFORMED PRIOR TO ANNOUNCED BUILDING POSSESSION AND THE FINAL CONNECTION OF SERVICES.
12. CONTRACTORS SHALL VERIFY BENCHMARKS AND DATUMS PRIOR TO COMMENCING CONSTRUCTION OR STAKING OF IMPROVEMENTS.
13. CONTRACTOR SHALL THOROUGHLY CHECK COORDINATION OF CIVIL, LANDSCAPE, MEP, ARCHITECTURAL, AND OTHER PLANS PRIOR TO COMMENCING CONSTRUCTION. OWNER AND CIVIL ENGINEER SHALL BE NOTIFIED OF ANY DISCREPANCY PRIOR TO COMMENCING WITH CONSTRUCTION.
14. CONTRACTOR SHALL REFER TO THE ARCHITECTURAL PLANS FOR EXACT LOCATIONS AND DIMENSIONS OF VESTIBULES, SLOPE PAVING, SIDEWALKS, EXIT PORCHES, TRUCK DOCKS, PRECISE BUILDING DIMENSIONS, AND EXACT BUILDING UTILITY ENTRANCE LOCATIONS.
15. ALL DIMENSIONS GIVEN ARE TO FACE OF CURB AND/OR BUILDING. DIMENSIONS FOR PIPES AND STRUCTURES ARE TO THE CENTERLINE, UNLESS OTHERWISE NOTED ON PLANS.
16. THE CONTRACTOR IS RESPONSIBLE FOR COORDINATING RELOCATIONS AND INSTALLATIONS OF FRANCHISE UTILITIES NECESSARY FOR ON- AND OFF-SITE CONSTRUCTION.
17. ON-SITE AND PERIMETER TRUCK ROUTE AND OTHER DIRECTIONAL SIGNAGE SHALL BE LOCATED OUT OF THE PEDESTRIAN, AUTOMOBILE, AND TRUCK ROUTES AND SHALL BE LOCATED BETWEEN THREE TO FIVE FEET BEHIND THE NEAREST BACK OF CURB UNLESS INDICATED OTHERWISE ON PLANS. SIGN HEIGHT, LOCATION, AND STRUCTURE SHALL BE SUCH THAT THE SIGNS POSE NO THREAT TO PUBLIC SAFETY.
18. ON-SITE AND PERIMETER TRUCK ROUTE AND OTHER DIRECTIONAL SIGNS SHALL BE ORIENTED SO THEY ARE READILY VISIBLE TO THE ONCOMING TRAFFIC FOR WHICH THEY ARE INTENDED. FIELD ADJUSTMENTS OF LOCATION AND ORIENTATION OF THE SIGNS ARE TO BE MADE TO ACCOMPLISH THIS.
19. CONTRACTOR SHALL REPLACE ANY FENCING, CURBING, ETC. THAT IS DESTROYED OR DAMAGED DUE TO THE CONSTRUCTION ACTIVITIES.
20. CONTRACTOR IS RESPONSIBLE FOR TRAFFIC CONTROL DEVICES AND PLANS FOR ANY STREET WORK.
21. ALL CONTRACTORS MUST CONFINE THEIR ACTIVITIES TO THE WORK AREA. NO ENCROACHMENTS ONTO DEVELOPED OR UNDEVELOPED AREAS WILL BE ALLOWED. ANY DAMAGE RESULTING THEREFROM SHALL BE CONTRACTOR'S RESPONSIBILITY TO REPAIR.
22. THE CONTRACTOR SHALL BE RESPONSIBLE FOR SUBMITTING A TRENCH SAFETY PLAN TO THE DEVELOPER AT THE TIME OF THE PRE-CONSTRUCTION MEETING, OR PRIOR TO BEGINNING CONSTRUCTION OF THESE IMPROVEMENTS. CONTRACTOR SHALL BE RESPONSIBLE FOR MAINTAINING TRENCH SAFETY REQUIREMENTS IN ACCORDANCE WITH MISSOURI STATE LAW AND O.S.H.A. STANDARDS FOR ALL EXCAVATION IN EXCESS OF FIVE FEET IN DEPTH. NO OPEN TRENCHES WILL BE ALLOWED OVERNIGHT. ONSITE SAFETY IS THE SOLE RESPONSIBILITY OF THE CONTRACTOR.
23. LIGHT POLES AND SIGNS SHALL NOT BE PLACED IN ADA ACCESSIBLE ROUTES, ACCESSIBLE ACCESS AISLES, AND/OR REINFORCED ZONES BEHIND RETAINING WALLS.
24. TO THE MAXIMUM EXTENT PRACTICAL, CONSTRUCTION STAGING, WORKER PARKING, AND ANY OTHER POTENTIALLY NOISY OR OFFENSIVE CONSTRUCTION ACTIVITY SHOULD BE LOCATED AS FAR FROM THE RESIDENTIAL NEIGHBORS AS POSSIBLE.
25. CONTRACTOR SHALL KEEP THE CONSTRUCTION SITE SECURE FROM TRESPASSERS AT ALL TIMES.
26. CONTRACTOR SHALL CONTACT CITY BUILDING OFFICIAL TO LEARN OF ANY UNUSUAL CONSTRUCTION SEQUENCING REQUIREMENTS THAT THE CITY MAY REQUIRE. THE CONTRACTOR IS CAUTIONED THAT THIS AND PERHAPS OTHER SUCH REQUIREMENTS MAY EXIST AND IT IS THE CONTRACTOR'S RESPONSIBILITY TO INVESTIGATE AND COMPLY WITH THEM.
27. CONTRACTOR IS RESPONSIBLE FOR OBTAINING ANY NECESSARY FENCE OR WALL PERMITS FROM THE CITY.
28. CONTRACTOR IS RESPONSIBLE FOR PROVIDING ADEQUATE TRAFFIC CONTROL PER CITY OF LEE'S SUMMIT STANDARDS.
29. CONTRACTOR SHALL INCLUDE ALL ITEMS THAT ARE LISTED FROM THE EXHIBIT B WORK LETTER BETWEEN THE DEVELOPER AND PETSUITES IN THEIR BID. ANY DEVIATIONS FROM THE WORK LETTER WILL REQUIRE DEVELOPER APPROVAL FOR EACH ITEM.

UTILITY PLAN NOTES:

1. ALL FILL MATERIAL SHALL BE IN PLACE AND COMPACTED BEFORE INSTALLATION OF PROPOSED UTILITIES.
2. CONTRACTOR SHALL NOTIFY THE UTILITY AUTHORITIES INSPECTORS 72 HOURS BEFORE CONNECTING TO ANY EXISTING LINE.
3. CONTRACTOR SHALL MAINTAIN A MINIMUM OF 3'-6' COVER ON ALL WATERLINES AND 3'-6' ON ALL SANITARY SEWER LINES.
4. CONNECTION FROM THE METER TO SITE UTILITY LINES SHALL BE MADE BY BUILDING CONTRACTOR.
5. EXISTING UTILITIES SHALL BE VERIFIED IN FIELD PRIOR TO INSTALLATION OF ANY NEW LINES.
6. REFER TO MECHANICAL, ELECTRIC AND PLUMBING DRAWINGS FOR ACTUAL TIE-IN LOCATIONS FOR UTILITIES.
7. THE CONTRACTOR IS SPECIFICALLY CAUTIONED THAT THE LOCATION AND/OR ELEVATION OF EXISTING UTILITIES AS SHOWN ON THESE PLANS IS BASED ON RECORDS OF THE VARIOUS UTILITY COMPANIES, AND WHERE POSSIBLE, MEASUREMENTS TAKEN IN THE FIELD. THE INFORMATION IS NOT TO BE RELIED ON AS BEING EXACT OR COMPLETE. THE CONTRACTOR MUST CALL THE APPROPRIATE UTILITY COMPANIES AT LEAST 72 HOURS BEFORE ANY EXCAVATION TO REQUEST EXACT FIELD LOCATION OF UTILITIES. IT SHALL BE THE RESPONSIBILITY OF THE CONTRACTOR TO LOCATE ALL EXISTING UTILITIES WHICH CONFLICT WITH THE PROPOSED IMPROVEMENTS SHOWN ON THE PLANS.
8. ALL NECESSARY INSPECTIONS AND/OR CERTIFICATIONS REQUIRED BY CODES AND/OR UTILITY SERVICE COMPANIES SHALL BE PERFORMED PRIOR TO THE FINAL CONNECTION OF SERVICE.
9. ALL UTILITY SEWER TRENCH BACKFILL SHALL HAVE GRANULAR BACKFILL AND BE MECHANICALLY COMPACTED.
10. THE CONTRACTOR SHALL VERIFY THE LOCATION, CONDITION AND ELEVATION OF ALL PROPOSED SEWER CONNECTION POINTS PRIOR TO THE START OF CONSTRUCTION. ANY DISCREPANCIES THAT WOULD INTERFERE WITH THE PROPOSED SEWER DESIGN SHALL IMMEDIATELY BE BROUGHT TO THE ATTENTION OF THE ENGINEER.
11. ALL PERMIT FEES AND COSTS ASSOCIATED WITH BRINGING UTILITY, SEWER AND WATER SERVICES TO THE BUILDING SHALL BE THE RESPONSIBILITY OF THE CONTRACTOR. ALL FEES AND COSTS SHALL BE INCLUDED IN THE CONTRACTORS BID.
12. G.C. IS TO PROVIDE TRENCH, WIRE, AND CONDUIT FOR TELEPHONE AND ELECTRICAL SERVICES, BACKFILL AND GRADE SMOOTH FOR A COMPLETE TELEPHONE AND ELECTRIC INSTALLATION.
13. G.C. SHALL BE RESPONSIBLE FOR ANY TAPS TO BE MADE UNDER THE SUPERVISION OF THE CITY WATER DIVISION.
14. ANY DISTURBED SIDEWALK SHALL BE FULL SLAB REPLACEMENT.
15. EXISTING SANITARY SEWER AND WATER SERVICE SHALL NOT BE INTERRUPTED.
16. THE CONTRACTOR SHALL INCLUDE THE COST ESTIMATE PROVIDED BY EVERGY IN HIS/HER BID FOR THE RELOCATION/REMOVAL OF ANY OVERHEAD ELECTRIC OR GUY WIRES.
17. THE REMOVAL AND REPLACEMENT, OR REHABILITATION OF THE EXISTING STRUCTURE(S) WILL BE DETERMINED BY THE CITY OF LEE'S SUMMIT DEVELOPMENT ENGINEER FIELD INSPECTOR. IF THE STRUCTURE IS DETERMINED TO REMAIN IN PLACE, THEN THE TOP SHALL BE ADJUSTED TO GRADE, IF NEEDED.
18. ALL STORM SEWER CONSTRUCTION AND MATERIALS SHALL BE IN ACCORDANCE WITH THE CITY OF LEE'S SUMMIT STANDARD SPECIFICATIONS AND CONSTRUCTION DETAILS.
19. ALL LATERAL SEWER CONSTRUCTION METHODS TO CONFORM TO LATEST STANDARDS AND SPECIFICATIONS FOR THE CITY OF LEE'S SUMMIT SEWER STANDARD SPECIFICATIONS AND CONSTRUCTION DETAILS.
20. ALL CONNECTIONS TO PUBLIC WATER SHALL BE AS REQUIRED BY THE CITY OF LEE'S SUMMIT WATER UTILITIES.
21. CONNECTION TO PUBLIC SEWER MAINS SHALL BE AS REQUIRED BY THE CITY OF LEE'S SUMMIT SEWER SANITARY. CONTRACTOR SHALL BE RESPONSIBLE FOR CONTACTING THE PROVIDER PRIOR TO CONNECTION TO PUBLIC SEWERS.
22. ALL TRENCHES UNDER AREAS TO BE PAVED AND UNDER EXISTING PAVING SHALL BE GRANULARLY FILLED WITH 3/4" MINUS CRUSHED LIMESTONE ONLY. BACKFILL SHALL BE PLACED IN ACCORDANCE WITH CITY OF LEE'S SUMMIT STANDARDS.
23. TYPE "C" BEDDING PER CITY OF LEE'S SUMMIT STANDARDS REQUIRED FOR PIPES IN ROCK.
24. ALL TRENCH BACKFILLS UNDER PAVEMENT WITHIN PUBLIC RIGHT-OF-WAY SHALL BE GRANULAR BACKFILLED. TRENCH BACKFILLS UNDER PAVED AREAS, OUTSIDE OF PUBLIC RIGHT-OF-WAY SHALL BE GRANULAR BACKFILL IN LIEU OF THE EARTH BACKFILL COMPACTED TO 90 PERCENT OF THE STANDARD AASHTO T-180 COMPACTION TEST A.S.T.M. D-1557.
25. ALL CONCRETE PIPE SHALL BE REINFORCED, AND CONFORM TO A.S.T.M. DESIGNATION C76-80 CLASS III UNLESS OTHERWISE NOTED.
26. ALL DIMENSIONS ARE TO THE CENTERLINE OF STRUCTURE EXCEPT FOR END OF PIPES OR FLARED ENDS. FLARED END DIMENSIONS VARY. CONTRACTOR SHALL VERIFY LENGTHS FOR FLARED END SECTIONS PER PROPOSED TYPE OF FLARED END SUBMITTED. REFER TO THE CORRESPONDING SEWER PROFILE SHEET FOR EXACT DIMENSIONS IF APPLICABLE.
27. PLUMBING CONTRACTOR AND SURVEYOR SHALL CONFIRM STRUCTURES PROPOSED ON THESE PLANS MATCH THE PROPOSED STRUCTURES THAT ARE ONSITE. DUE TO CHANGE OF ELEVATIONS, AND LOCATIONS DEPENDING ON THE STRUCTURE AND TYPE, THE PLUMBING CONTRACTOR SHALL BE RESPONSIBLE FOR ANY ISSUES FOR PROPOSING A DIFFERENT TYPE OF STRUCTURE OR PIPE THAN WHAT IS ON THESE PLANS. GENERAL CONTRACTOR SHALL REIMBURSE CIVIL ENGINEER FOR ANY TIME AND MATERIALS TO ADDRESS CHANGES TO STRUCTURES OR DESIGN FROM WHAT HAS BEEN APPROVED TO REDUCE OVERALL CONSTRUCTION COSTS.
28. STANDARDS AND DETAILS FROMCITY OF LEE'S SUMMIT STANDARDS PLANS SHALL SUPERCEDE THESE REQUIREMENTS

PREMIER
DESIGN GROUP
100 MIDLAND PARK DRIVE
WENTZVILLE, MO 63385
MISSOURI CERTIFICATE OF AUTHORITY #E-2011000031
MISSOURI CERTIFICATE OF AUTHORITY #LS-2012007849

STATE OF MISSOURI
STEVE
MARION
NUMBER
PE2006007195
PROFESSIONAL ENGINEER
10/5/2021

ENGINEERS AUTHENTICATION
The responsibility for professional engineering liability on this project is hereby limited to the set of plans authenticated by the seal, signature, and date hereunder attached. Responsibility is disclaimed for all other engineering plans involved in this project and specifically excludes revisions after this date unless reauthenticated.
STEVEN D. MARION P.E.
PROFESSIONAL ENGINEER
PE 2006007195

Project
DUTCH BROS
LEE'S SUMMIT, MO
500 NW CHIPMAN RD.
LEE'S SUMMIT, MO 64086
TM CROWLEY
501 PENNSYLVANIA PARKWAY SUITE 160
INDIANAPOLIS, IN 46280

Date 9-30-2021

#	Revision Date	Description of Changes

Sheet Title
GENERAL NOTES

Sheet Number
C-001

Project No.	2109720
Drawn By	A. JONES
Checked By	M. FOGARTY

NOT RELEASED FOR CONSTRUCTION

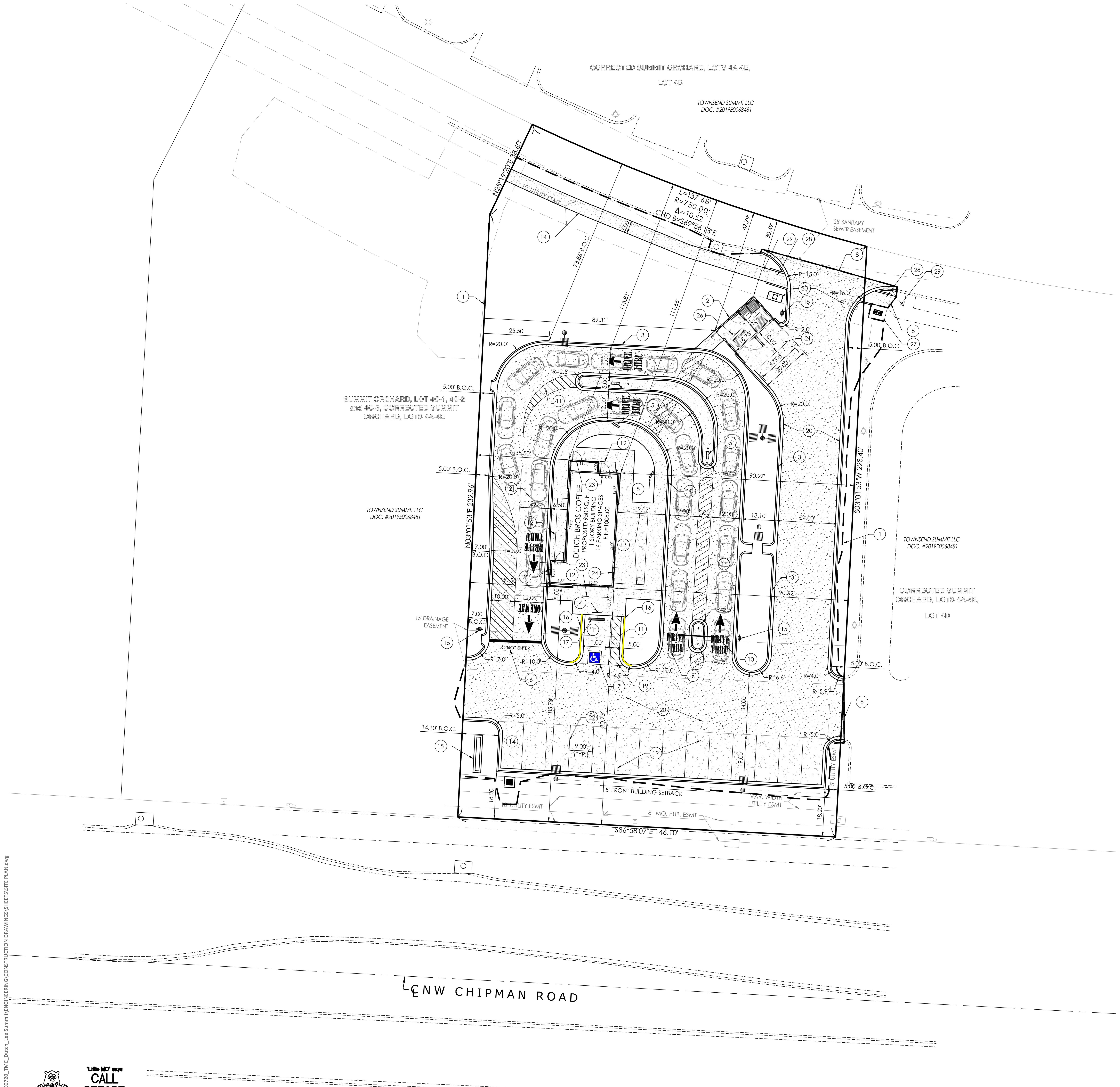

PROJECT NOTES:

1. BASIS OF BEARINGS: THIS SURVEY WAS ADOPTED FROM THE MISSOURI STATE PLANE COORDINATE SYSTEM, NAD 1983 - WEST ZONE
2. CURRENT ZONING: PMIX - PLANNED MIXED USE
3. SURROUNDING ZONING: PMIX - PLANNED MIXED USE
4. SITE AREA = ±0.828 ACRES
5. PROPOSED USE - COFFEE SHOP
6. PROPOSED BUILDING HEIGHT - REFER TO ARCHITECTURAL PLANS
7. PARKING SETBACK:

   NONE PER RECORDED PLAT

8. BUILDING SETBACKS:

   FRONT BUILDING SETBACK: 15' ALONG NW CHIPMAN ROAD
   SIDE BUILDING SETBACK: NONE PER RECORDED PLAT
   REAR BUILDING SETBACK: NONE PER RECORDED PLAT

9. FLOOR AREA RATIO - 950/36,068 = 0.026 FAR
10. IMPERVIOUS COVERAGE - SITE = 67.75%
11. PARKING AND LOADING REQUIREMENTS

    REQUIRED PARKING: TWO PLUS 1 PER EMPLOYEE ON MAX. SHIFT

    2 + 10 EMPLOYEES = 12 PARKING SPACE REQUIRED

    PROVIDED PARKING= 15 PARKING SPACES

12. PER FEMA FIRM PANEL #29095C0417G, EFFECTIVE ON 01/20/2017 THE PROPERTY IS ZONE X (UNSHADED), AREAS DETERMINED TO BE OUTSIDE THE 0.2% ANNUAL CHANCE FLOODPLAIN.
13. THIS PROPERTY IS LOCATED WITHIN THE LITTLE CEDAR CREEK WATERSHED.
14. OIL AND GAS WELL LOCATIONS: BASED ON MIoDNR STATE OIL AND GAS COUNCIL, THERE ARE NO ACTIVE WELLS AS OF JUNE 2, 2020. ALL EXISTING OIL AND GAS WELLS FOR THIS SECTION-TOWNSHIP-RANGE HAVE BEEN ABANDONED OR PLUGGED.

REFERENCE NOTES SCHEDULE

CODE	DESCRIPTION	DETAIL
1	LAND DISTURBANCE LIMITS	
2	PROPOSED DUMPSTER ENCLOSURE. REFER TO ARCHITECTURAL PLANS FOR DESIGN AND DETAILS	
3	PROPOSED CG-1 CONCRETE CURB AND GUTTER (TYPICAL)	10/C-600
4	PROPOSED VAN ACCESSIBLE PARKING SIGN	15/C-600
5	PROPOSED MENU BOARD. REFER TO ARCHITECTURAL PLANS FOR DETAILS	
6	PROPOSED "DO NOT ENTER" STRIPING	14/C-600
7	PROPOSED PAINTED INTERNATIONAL SYMBOL OF ACCESSIBILITY	17/C-600
8	SAW CUT AND MATCH EXISTING CURB AND/OR PAVEMENT ELEVATION AT NEAREST JOINT	
9	PROPOSED DRIVE-THRU PAVEMENT MARKING	14/C-600
10	PROPOSED DRIVE-THRU CLEARANCE BAR. REFER TO ARCHITECTURAL PLANS FOR DETAILS	
11	PROPOSED CROSS STRIPING	16/C-600
12	PROPOSED CANOPY. REFER TO ARCHITECTURAL PLANS FOR DETAIL.	
13	PROPOSED AWNING. REFER TO ARCHITECTURAL PLANS FOR DETAIL.	
14	PROPOSED CONCRETE SIDEWALK	7/C-600
15	PROPOSED SIGN, REFER TO ARCHITECTURAL PLANS FOR TYPE AND SIZE.	
16	TRANSITION CURB FROM 6" TALL TO FLUSH CURB	13/C-600
17	PROPOSED WHEEL STOP	9/C-600
18	PROPOSED INTEGRAL CONCRETE CURB AND SIDEWALK	11/C-600
19	LIGHT DUTY ASPHALT PAVEMENT	6/C-600
20	MEDIUM DUTY ASPHALT PAVEMENT	5/C-600
21	HEAVY DUTY CONCRETE PAVEMENT	4/C-600
22	PROPOSED 4" DOUBLE ROLLED STRIPE, PAINTED WHITE (TYPICAL)	
23	INGRESS/EGRESS DOOR LOCATION	
24	PICK-UP WINDOW LOCATION	
25	DRIVE-THRU WINDOW LOCATION	
26	PROPOSED 4" BOLLARD(S)	
27	EXISTING TRANSFORMER (PROTECT)	
28	PROPOSED ADA ACCESSIBLE RAMP. RAMP SHALL NOT EXCEED 2% CROSS SLOPE AND 8.33% LONGITUDAL SLOPE.	
29	PROPOSED ACCESSIBLE LANDING. LANDING SHALL BE 5`X5` AT THE TOP OF THE RAMP.	
30	PROPOSED LOCATION OF EXISTING TRANSFORMER TO BE RELOCATED	

PAVEMENT NOTES

1. PAVEMENT THICKNESS SHALL BE AS FOLLOWS: (UNLESS NOTED OTHERWISE ON PLAN)

LIGHT DUTY ASPHALT PAVEMENT
1.5" TYPE "2.01" ASPHALT SURFACE COURSE
4" TYPE "2.01" ASPHALT BASE COURSE
6" MODOT TYPE 5 AGGREGATE WITH GEOGRID OR/
6" MODOT TYPE 5 AGGREGATE WITH 6" STABILIZED BASE

MEDIUM DUTY ASPHALT PAVEMENT (DRIVE AISLE)
2" TYPE "2.01" ASPHALT SURFACE COURSE
7.5" TYPE "2.01" ASPHALT BASE COURSE
12" MODOT TYPE 5 AGGREGATE WITH GEOGRID OR/
6" MODOT TYPE 5 AGGREGATE WITH 9" STABILIZED BASE

HEAVY DUTY CONCRETE PAVEMENT
(TRASH ENCLOSURE PAD & DRIVE-THRU PAD)
8" NON-REINFORCED PORTLAND CEMENT CONCRETE
4" MODOT TYPE 5 AGGREGATE BASE

CONCRETE SIDEWALKS
4" PORTLAND CEMENT CONCRETE
4" MODOT TYPE 5 AGGREGATE BASE

UNDERGROUND UTILITIES AND OSHA SAFETY NOTE:

Underground utilities and structures have been plotted from available information and therefore, their location must be considered approximate only. It is the responsibility of the individual contractors to notify the utility companies before actual construction. All O.S.H.A rules and regulations established for the type of construction required by these plans shall be strictly followed (ie. trenching, blasting, etc.)

1" = 20'

SCALE IN FEET

PREMIER DESIGN GROUP
100 MIDLAND PARK DRIVE
WENTZVILLE, MO 63385

STATE OF MISSOURI
STEVE MARION
NUMBER
PE2006007195
PROFESSIONAL ENGINEER

ENGINEERS AUTHENTICATION

The responsibility for professional engineering liability on this project is hereby limited to the set of plans authenticated by the seal, signature, and date hereunder attached. Responsibility is disclaimed for all other engineering plans involved in this project and specifically excludes revisions after this date unless reauthenticated.

STEVEN D. MARION P.E.
PROFESSIONAL ENGINEER
PE 2006007195

Project
DUTCH BROS
LEE'S SUMMIT, MO
500 NW CHIPMAN RD.
LEE'S SUMMIT, MO 64086
TM CROWLEY
501 PENNSYLVANIA PARKWAY SUITE 160
INDIANAPOLIS, IN 46280

Date 9-30-2021

Sheet Title SITE PLAN

Sheet Number C-100

Project No.	2109720
Drawn By	A. JONES
Checked By	M. FOGARTY

NOT RELEASED FOR CONSTRUCTION

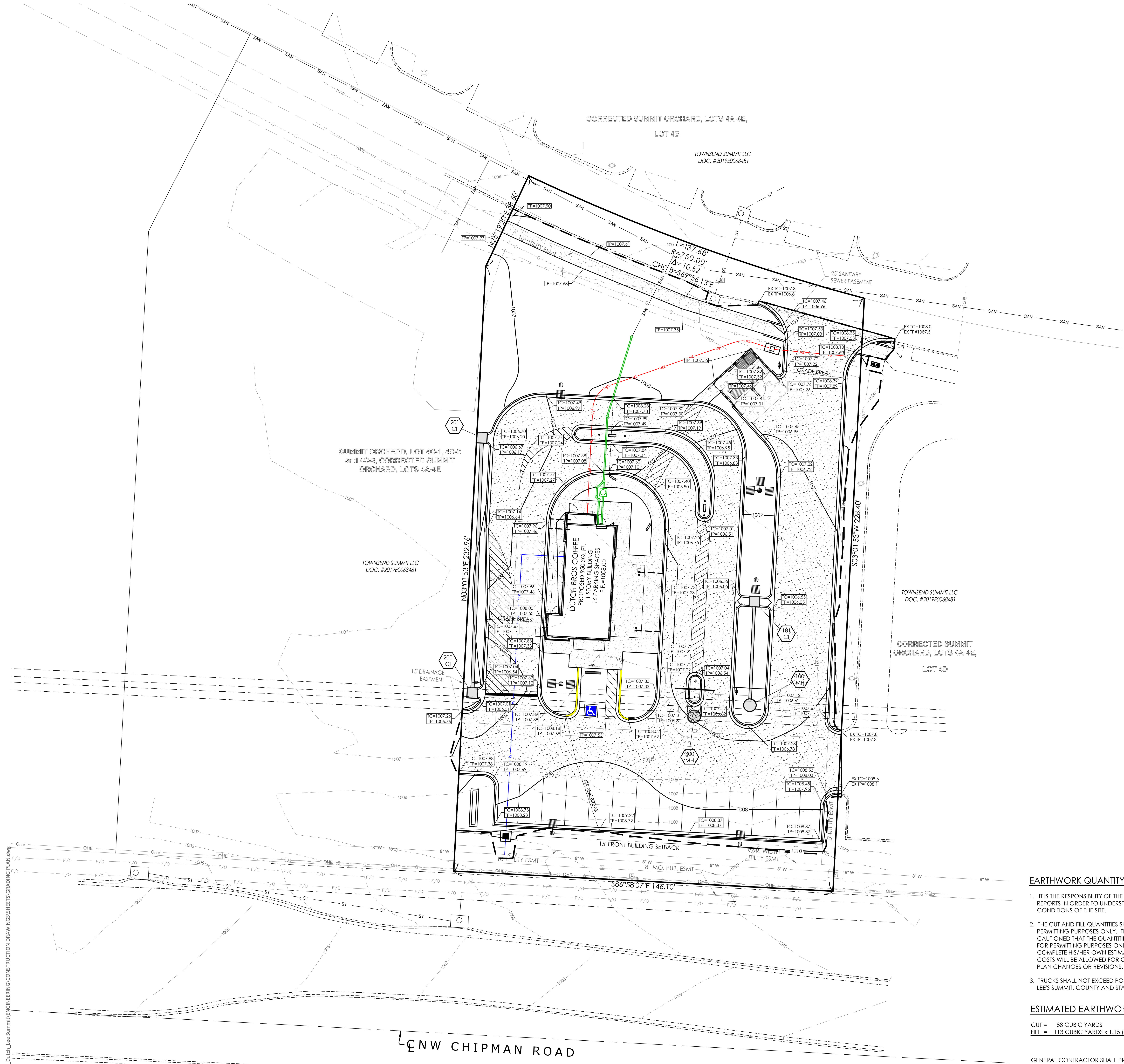

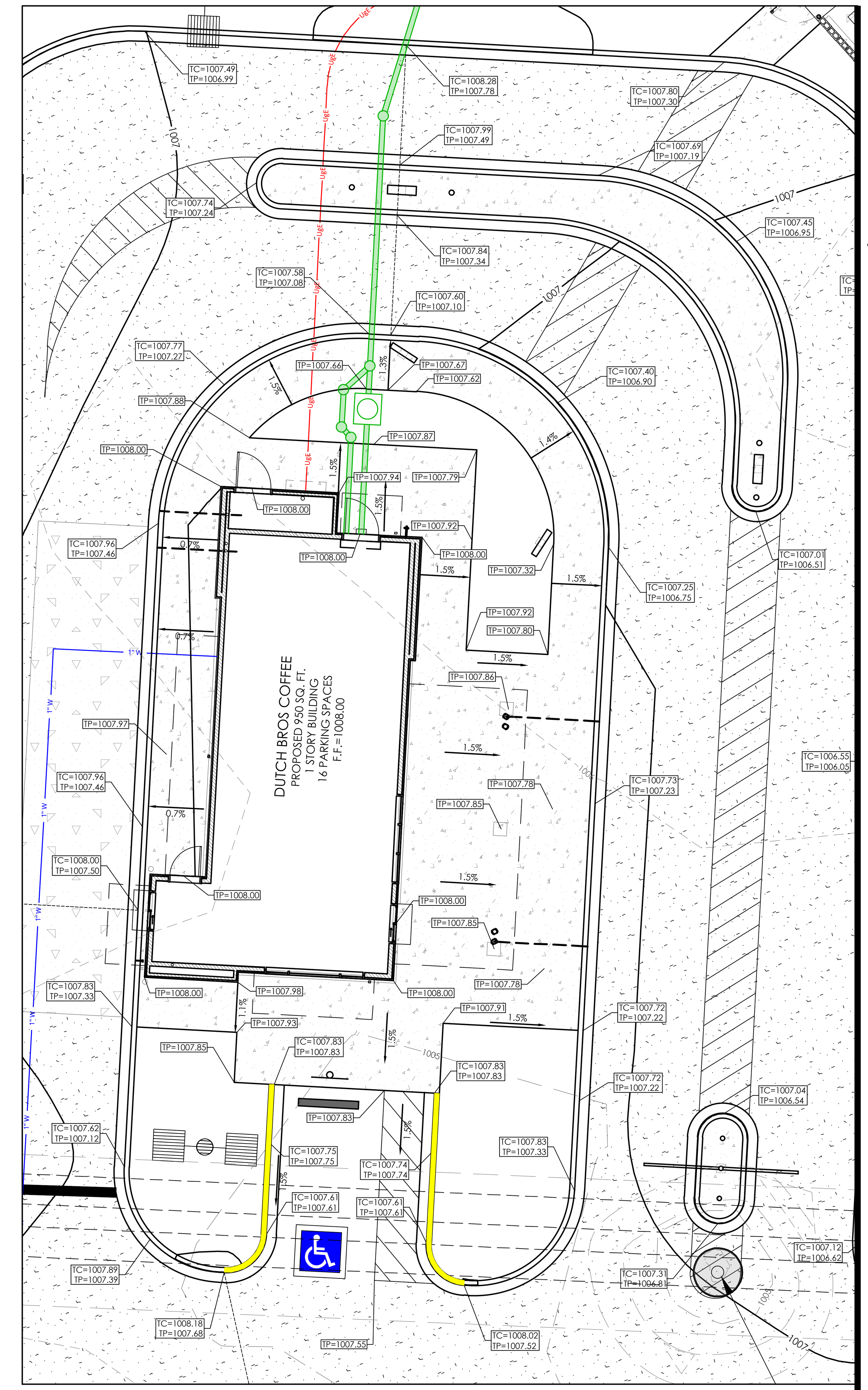

BUILDING AREA INSET

SCALE: 1" = 10'

EARTHWORK QUANTITY NOTES:

1. IT IS THE RESPONSIBILITY OF THE CONTRACTOR TO READ ALL APPLICABLE REPORTS IN ORDER TO UNDERSTAND THE SOIL AND GROUNDWATER CONDITIONS OF THE SITE.

2. THE CUT AND FILL QUANTITIES SHOWN ON THIS PLAN ARE FOR PERMITTING PURPOSES ONLY. THE GRADING CONTRACTOR IS CAUTIONED THAT THE QUANTITIES SHOWN ARE THE ENGINEER'S ESTIMATE FOR PERMITTING PURPOSES ONLY. THE GRADING CONTRACTOR SHALL COMPLETE HIS/HER OWN ESTIMATE WHEN BIDDING. NO ADDITIONAL COSTS WILL BE ALLOWED FOR GRADING WITHOUT JUSTIFICATION DUE TO PLAN CHANGES OR REVISIONS.

3. TRUCKS SHALL NOT EXCEED POSTED WEIGHT LIMITS FOR THE CITY OF LEE'S SUMMIT, COUNTY AND STATE BRIDGES DURING HAUL OPERATIONS.

ESTIMATED EARTHWORK QUANTITIES:

CUT = 88 CUBIC YARDS
FILL = 113 CUBIC YARDS x 1.15 (SHRINKAGE) = 130 CUBIC YARDS

IMPORT = 42 CUBIC YARDS

GENERAL CONTRACTOR SHALL PROVIDE A PROPOSED HAUL ROUTE FOR APPROVAL PRIOR TO ANY HAUL ACTIVITIES

ABBREVIATIONS:

ALL ELEVATIONS SHOWN ON THE GRADING PLAN ARE TO TOP OF PAVEMENT OR FINISHED GROUND UNLESS NOTED OTHERWISE. ELEVATIONS TO POINTS OTHER THAN THE TOP OF PAVEMENT ARE NOTED AS FOLLOWS:

TP=TOP OF PAVEMENT
TC=TOP OF CURB
TW=TOP OF WALL
BW=FINISHED GROUND AT FACE OF WALL
GRND=FINISHED GROUND AT YARD DRAINS

CONSTRUCTION OF ADA ACCESSIBLE ROUTES NOT IN COMPLIANCE WITH THE PLANS AND ADA GUIDELINES SHALL BE REMOVED AND CORRECTED AT THE EXPENSE OF THE CONTRACTOR. A VERIFICATION SURVEY SHALL BE COMPLETED BY THE ENGINEER FOR CERTIFICATION TO OWNER AFTER CONSTRUCTION HAS BEEN COMPLETED.

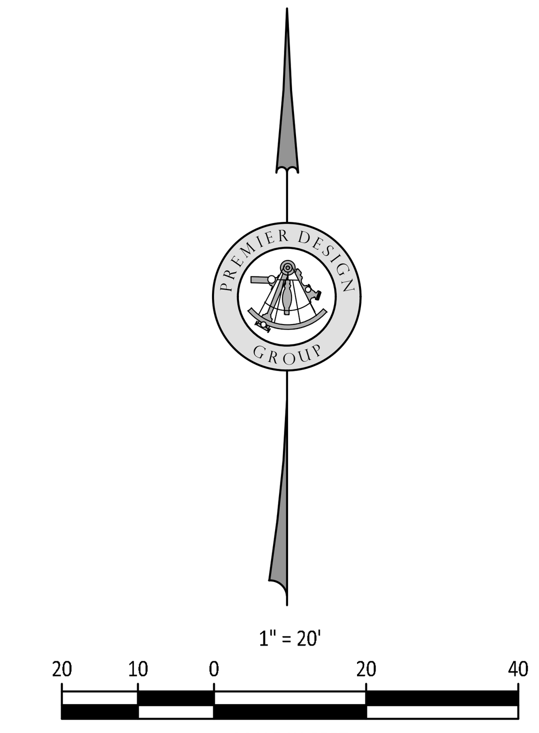

UNDERGROUND UTILITIES AND OSHA SAFETY NOTE:

Underground utilities and structures have been plotted from available information and therefore, their location must be considered approximate only. It is the responsibility of the individual contractors to notify the utility companies before actual construction. All O.S.H.A rules and regulations established for the type of construction required by these plans shall be strictly followed (ie. trenching, blasting, etc.)

\\Vault-pc\vault\CIVIL 3D PROJECTS\2021\2109720_TMC_Dutch_Lee Summit\ENGINEERING\CONSTRUCTION DRAWINGS\SHEETS\GRADING PLAN.dwg

PREMIER DESIGN GROUP
100 MIDLAND PARK DRIVE
WENTZVILLE, MO 63385
MISSOURI CERTIFICATE OF AUTHORITY #E-2011000031
MISSOURI CERTIFICATE OF AUTHORITY #LS-2012007849

STATE OF MISSOURI
STEVE MARION
NUMBER PE2006007195
PROFESSIONAL ENGINEER
10/5/2021

ENGINEERS AUTHENTICATION

The responsibility for professional engineering liability on this project is hereby limited to the set of plans authenticated by the seal, signature, and date hereunder attached. Responsibility is disclaimed for all other engineering plans involved in this project and specifically excludes revisions after this date unless reauthenticated.

STEVEN D. MARION P.E.
PROFESSIONAL ENGINEER
PE 2006007195

Project

DUTCH BROS
LEE'S SUMMIT, MO
500 NW CHIPMAN RD.
LEE'S SUMMIT, MO 64086
TM CROWLEY
501 PENNSYLVANIA PARKWAY SUITE 160
INDIANAPOLIS, IN 46280

Date 9-30-2021

#	Revision Date	Description of Changes

Sheet Title

GRADING PLAN

Sheet Number

C-200

Project No.	2109720
Drawn By	A. JONES
Checked By	M. FOGARTY

NOT RELEASED FOR CONSTRUCTION

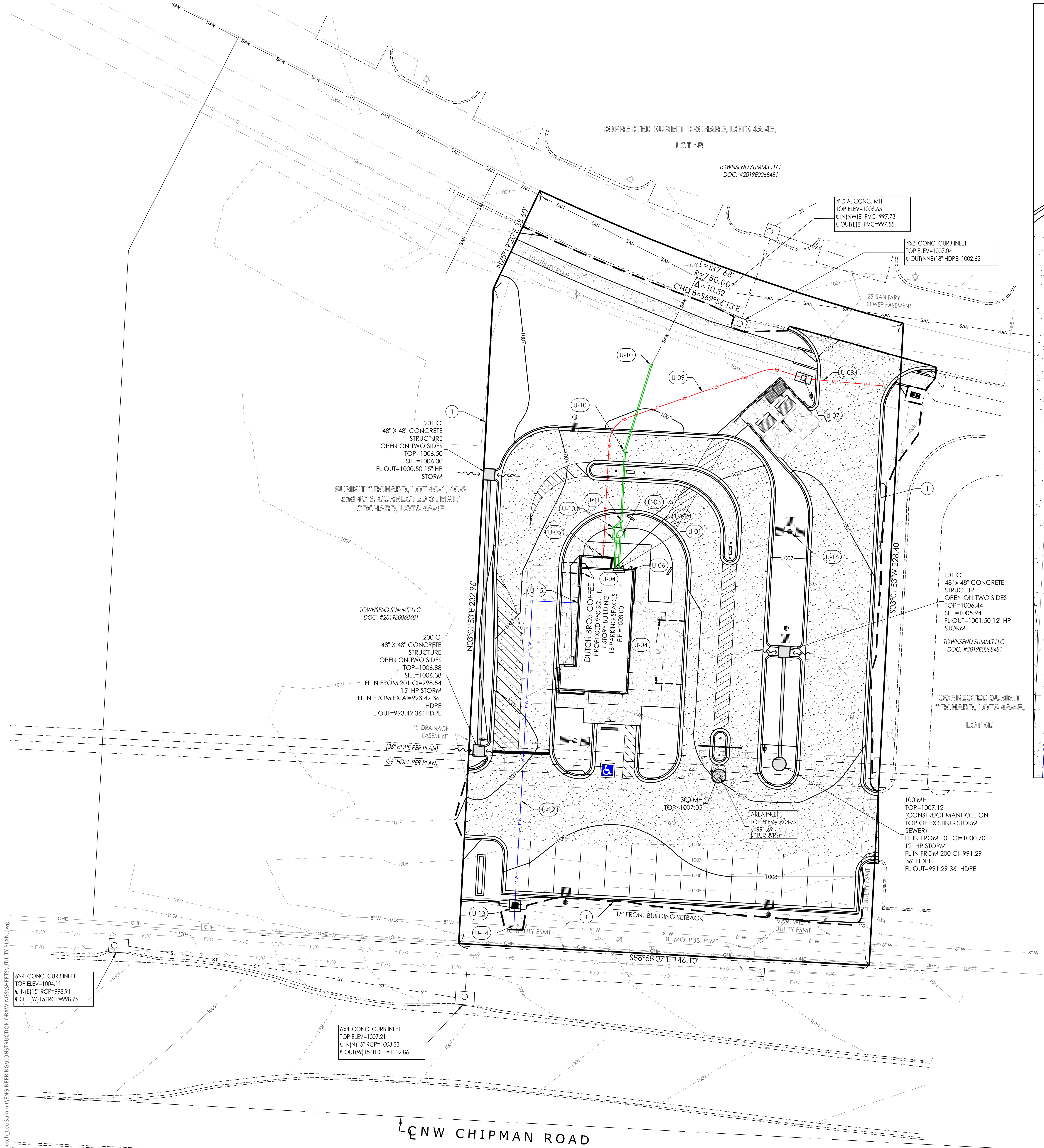

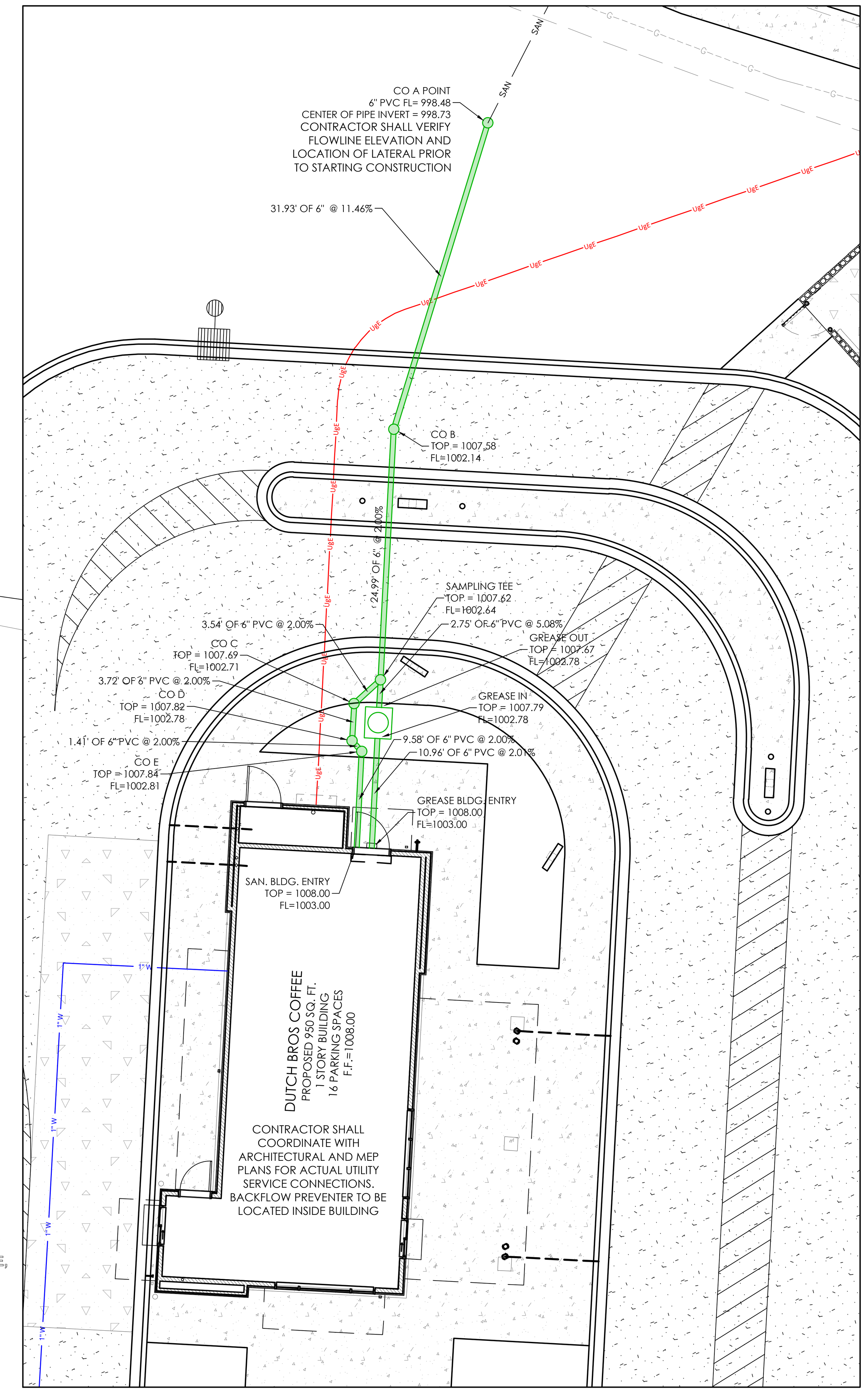

BUILDING AREA INSET

SCALE: 1" = 10'

UTILITY PLAN NOTES:

1. ALL FILL MATERIAL IS TO BE IN PLACE AND COMPACTED BEFORE INSTALLATION OF PROPOSED UTILITIES.
2. CONTRACTOR SHALL NOTIFY THE UTILITY AUTHORITIES INSPECTORS 72 HOURS BEFORE CONNECTING TO ANY EXISTING LINE.
3. CONTRACTOR SHALL MAINTAIN A MINIMUM OF 3'-6' COVER ON ALL WATERLINES AND 3'-6' ON ALL SANITARY SEWER LINES.
4. CONTRACTOR SHALL COORDINATE WITH BUILDING ARCHITECT AND TELEPHONE COMPANY FOR EXACT LOCATIONS OF TELEPHONE ENTRY TO THE BUILDING. CONTRACTOR SHALL BE RESPONSIBLE FOR ANY CONDUITS, PULL WIRES, TRENCHING, BACKFILL, ETC. REQUIRED BY TELEPHONE COMPANY.
5. CONNECTION FROM THE METER TO SITE UTILITY LINES SHALL BE MADE BY BUILDING CONTRACTOR.
6. EXISTING UTILITIES SHALL BE VERIFIED IN FIELD PRIOR TO INSTALLATION OF ANY NEW LINES.
7. REFER TO INTERIOR MECHANICAL, ELECTRIC AND PLUMBING DRAWINGS FOR TIE-IN OF ALL UTILITIES.
8. THE CONTRACTOR IS SPECIFICALLY CAUTIONED THAT THE LOCATION AND/OR ELEVATION OF EXISTING UTILITIES AS SHOWN ON THESE PLANS IS BASED ON RECORDS OF THE VARIOUS UTILITY COMPANIES, AND WHERE POSSIBLE, MEASUREMENTS TAKEN IN THE FIELD. THE INFORMATION IS NOT TO BE RELIED ON AS BEING EXACT OR COMPLETE. THE CONTRACTOR MUST CALL THE APPROPRIATE UTILITY COMPANIES AT LEAST 72 HOURS BEFORE ANY EXCAVATION TO REQUEST EXACT FIELD LOCATION OF UTILITIES. IT SHALL BE THE RESPONSIBILITY OF THE CONTRACTOR TO LOCATE ALL EXISTING UTILITIES WHICH CONFLICT WITH THE PROPOSED IMPROVEMENTS SHOWN ON THE PLANS.
9. ALL NECESSARY INSPECTIONS AND/OR CERTIFICATIONS REQUIRED BY CODES AND/OR UTILITY SERVICE COMPANIES SHALL BE PERFORMED PRIOR TO ANNOUNCED BUILDING POSSESSION AND THE FINAL CONNECTION OF SERVICE.
10. CONTRACTOR SHALL COORDINATE WITH BUILDING ARCHITECT AND SPIRE FOR EXACT LOCATION OF GAS ENTRY. G.C. TO INCLUDE IN BID FOR CONTRACTOR ANY GAS PIPING, CONDUITS, TRENCHING, BACKFILLING, ETC. REQUIRED BY SPIRE .
11. CONTRACTOR SHALL COORDINATE WITH BUILDING ARCHITECT AND EVERGY FOR EXACT LOCATION OF ELECTRIC ENTRY. CONTRACTOR SHALL BE RESPONSIBLE FOR ANY CONDUITS, TRENCHING, BACKFILLING, CABLES, ETC. REQUIRED BY ELECTRIC COMPANY.
12. REFER TO MEP PLANS FOR GAS SERVICE SIZING.
13. ALL UTILITY SEWER TRENCH BACKFILL SHALL HAVE GRANULAR BACKFILL AND BE MECHANICALLY COMPACTED.
14. THE CONTRACTOR SHALL VERIFY THE LOCATION, CONDITION AND ELEVATION OF ALL PROPOSED SEWER CONNECTION POINTS PRIOR TO THE START OF CONSTRUCTION. ANY DISCREPANCIES THAT WOULD INTERFERE WITH THE PROPOSED SEWER DESIGN SHALL IMMEDIATELY BE BROUGHT TO THE ATTENTION OF THE ENGINEER.
15. ALL PERMIT FEES AND COSTS ASSOCIATED WITH BRINGING UTILITY, SEWER AND WATER SERVICES TO THE BUILDING SHALL BE THE RESPONSIBILITY OF THE CONTRACTOR. ALL FEES AND COSTS SHALL BE INCLUDED IN THE CONTRACTORS BID.
16. ALL CONSTRUCTION MATERIALS USED SHALL CONFORM TO THE CURRENT VERSION OF THE CITY OF LEE'S SUMMIT AND STATE OF MISSOURI SPECIFICATIONS.
17. G.C. IS TO PROVIDE TRENCH PULL WIRE AND CONDUIT FOR TELEPHONE AND ELECTRICAL SERVICES, BACKFILL AND GRADE SMOOTH FOR A COMPLETE TELEPHONE AND ELECTRIC INSTALLATION SHALL BE BY THE GENERAL CONTRACTOR.
18. GENERAL CONTRACTOR IS TO PROVIDE TRENCH, BACKFILL AND GRADE SMOOTH FOR A COMPLETE WATER LINE INSTALLATION.
19. ANY DISTURBED SIDEWALK OR CONCRETE PAVEMENT SHALL BE FULL SLAB REPLACEMENT.
20. EXISTING SANITARY SEWER SERVICE SHALL NOT BE INTERRUPTED.
21. ALL WATER LINES GREATER THAN 3" SHALL BE C-900 PVC PIPE. WATER LINES SMALLER THAN 3" SHALL BE TYPE "K" COPPER.
22. ALL CONNECTIONS TO PUBLIC WATER SHALL BE AS REQUIRED BY CITY OF LEE'S SUMMIT WATER CODES. WATER TAP AND METERS UNDER 2" SHALL BE INSTALLED BY CITY OF LEE'S SUMMIT WATER UP TO THE RIGHT-OF-WAY LINES. WATER TAP AND METERS OVER 2" SHALL BE INSTALLED BY THE CONTRACTOR. CONTRACTOR SHALL BE RESPONSIBLE FOR CONTACTING CITY OF LEE'S SUMMIT TO SCHEDULE CONNECTION TO PUBLIC WATER.
23. SANITARY LINES SHALL BE PVC MEETING ASTM D-3034 SDR 26 EXCEPT FOR PIPES THAT CROSS ABOVE WATER MAINS, THIS PIPE SHALL BE AWA C900 UNLESS WATER MAIN IS CASED. CONTRACTOR SHALL BE RESPONSIBLE FOR CONTACTING CITY OF LEE'S SUMMIT SEWER TO SCHEDULE CONNECTION TO PUBLIC SEWER.
24. CONTRACTOR SHALL COORDINATE WITH ADJACENT PROPERTY OWNERS FOR ANY DISRUPTIONS TO EXISTING UTILITY SERVICES.
25. CONTRACTOR IS RESPONSIBLE FOR PAVEMENT REPAIR AND REPLACEMENT REQUIRED FOR ALL UTILITY CONNECTIONS AND INSTALLATIONS.
26. THE OWNER/DEVELOPER WILL BE RESPONSIBLE FOR ANY AND ALL APPLICABLE TAP AND SERVICE FEES AS LISTED IN THE MOST CURRENT EDITION OF CITY OF LEE'S SUMMIT RULES AND REGULATIONS FOR CUSTOMER SERVICE.
27. COORDINATION WITH THE ELECTRIC, TELEPHONE AND CATV COMPANIES SHALL BE THE RESPONSIBILITY OF THE ELECTRICAL CONTRACTOR AND SHALL BE CONDUCTED IN A MANNER THAT RESULTS IN AN EFFICIENT AND TIMELY RELOCATION AND REMOVAL OF THE EXISTING FACILITIES.
28. GROUND ELEVATIONS SHALL BE WITHIN 6" OF THE FINAL PROPOSED ELEVATIONS PRIOR THE START OF ELECTRIC, TELEPHONE AND CATV RELOCATIONS OR INSTALLATIONS OF NEW SERVICE.
29. CONTRACTOR SHALL REFERENCE ELECTRICAL PLANS FOR FURTHER INFORMATION AND FOR CONDUIT ROUTING TO LIGHT STANDARDS AND ANY GROUND MOUNTED SIGNS.
30. ALL UTILITY IMPROVEMENTS (SERVICES, EXTENSIONS, CONNECTIONS, ETC.) TO BE "PRIVATE".
31. BUILDING SEWER STUBS BEING DISCONNECTED FROM THE SEWER MAIN SHALL BE DISCONNECTED BY THE WATER UTILITIES DEPARTMENT, AFTER THE CONTRACTOR HAS PROVIDED ACCESS TO THE SEWER MAIN VIA AN OSHA COMPLIANT EXCAVATION WITH PROPER SHORING AS NECESSARY. WATER UTILITIES STAFF RESERVE THE RIGHT TO NOT ENTER ANY TRENCH DETERMINED TO BE UNSAFE.

REFERENCE NOTES SCHEDULE

CODE	DESCRIPTION
1	LAND DISTURBANCE LIMITS
	UTILITY PLAN
CODE	DESCRIPTION
U-01	PROPOSED 6" GREASE WASTE CONNECTION, INVERT=1003.00, REFERENCE MEP PLANS
U-02	PROPOSED 6" SANITARY SEWER CONNECTION, INVERT=1003.00, REFERENCE MEP PLANS
U-03	PROPOSED GB-50 GREASE TRAP, REFER TO ARCHITECTURAL PLANS
U-04	ROOF DRAINS, REFER TO ARCH. PLANS FOR EXACT LOCATION AND DISCHARGE DETAIL
U-05	PROPOSED ELECTRIC ENTRY, REFERENCE MEP PLANS FOR CONTINUATION
U-06	PROPOSED WALL HYDRANT, REFER TO ARCHITECTURAL PLANS FOR EXACT LOCATION.
U-07	RELOCATED GROUND MOUNTED TRANSFORMER PER EVERGY MISSOURI WEST STANDARDS
U-08	PROPOSED PRIMARY UNDERGROUND ELECTRIC SERVICE
U-09	PROPOSED SECONDARY UNDERGROUND ELECTRIC SERVICE
U-10	PROPOSED SANITARY LATERAL CLEANOUT
U-11	PROPOSED SANITARY LATERAL SAMPLING TEE
U-12	PROPOSED 1" DOMESTIC WATER LINE PER CITY OF LEE`S SUMMIT SPECIFICATIONS
U-13	PROPOSED 1" DOMESTIC WATER METER AND PIT PER THE CITY OF LEE`S SUMMIT WATER SPECIFICATIONS
U-14	P.O.C. CONNECTION TO EX. 8" WATER MAIN INSTALL: (1) 8"X8"X1" TEE (1) 1" DOMESTIC METER PER CITY OF LEE`S SUMMIT WATER SPECIFICATIONS
U-15	PROPOSED 1" DOMESTIC WATER ENTRY, REFERENCE MEP PLANS FOR CONTINUATION
U-16	PROPOSED LIGHT STANDARDS, REFERENCE PHOTOMETRIC PLAN E0.01

THE CONTRACTOR SHALL VISIT THE SITE PRIOR TO SUBMITTAL OF HIS/HER BIDS TO CONFIRM THAT THE SITE CONDITIONS ARE AS SHOWN ON THESE PLANS. ANY CONDITION THAT IS DIFFERENT THAN WHAT IS SHOWN ON THESE PLANS SHALL BE BROUGHT TO THE ATTENTION OF THE ENGINEER PRIOR TO SUBMITTAL OF BIDS.

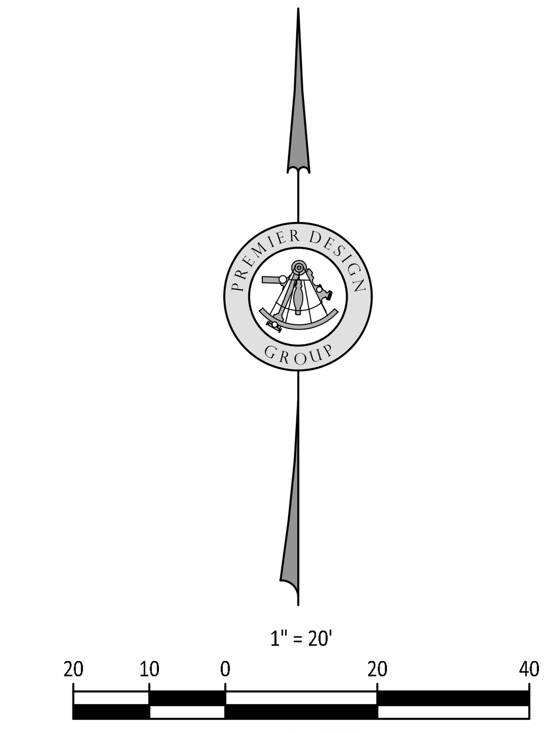

"Little MO" says CALL BEFORE YOU DIG!
1-800-DIG-RITE

UNDERGROUND UTILITIES AND OSHA SAFETY NOTE:

Underground utilities and structures have been plotted from available information and therefore, their location must be considered approximate only. It is the responsibility of the individual contractors to notify the utility companies before actual construction. All O.S.H.A rules and regulations established for the type of construction required by these plans shall be strictly followed (ie. trenching, blasting, etc.)

\\Vault-pc\vault\CIVIL 3D PROJECTS\2021\2109720_TMC_Dutch_Lee Summit\ENGINEERING\CONSTRUCTION DRAWINGS\SHEETS\UTILITY PLAN.dwg

PREMIER DESIGN GROUP
100 MIDLAND PARK DRIVE
WENTZVILLE, MO 63385
MISSOURI CERTIFICATE OF AUTHORITY #1-2011000031
MISSOURI CERTIFICATE OF AUTHORITY #LS-2012007849

STATE OF MISSOURI
STEVE MARION
NUMBER PE2006007195
PROFESSIONAL ENGINEER

ENGINEERS AUTHENTICATION
The responsibility for professional engineering liability on this project is hereby limited to the set of plans authenticated by the seal, signature, and date hereunder attached. Responsibility is disclaimed for all other engineering plans involved in this project and specifically excludes revisions after this date unless reauthenticated.
STEVEN D. MARION P.E.
PROFESSIONAL ENGINEER
PE 2006007195

Project
DUTCH BROS
LEE'S SUMMIT, MO
500 NW CHIPMAN RD.
LEE'S SUMMIT, MO 64086
TM CROWLEY
501 PENNSYLVANIA PARKWAY SUITE 160
INDIANAPOLIS, IN 46280

Date 9-30-2021

#	Revision Date	Description of Changes

Sheet Title: UTILITY PLAN

Sheet Number: C-300

Project No.	2109720
Drawn By	A. JONES
Checked By	M. FOGARTY

NOT RELEASED FOR CONSTRUCTION

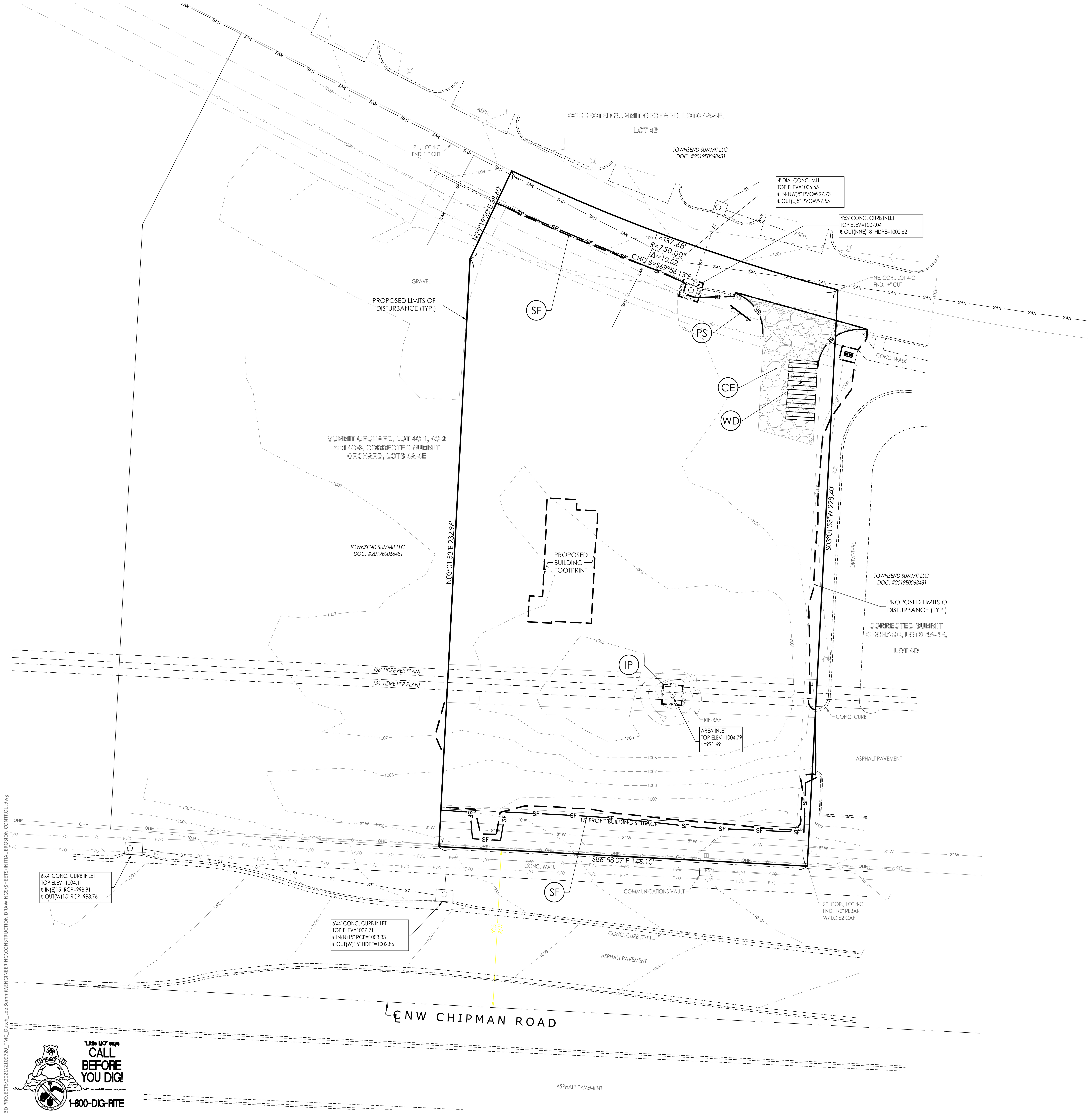

UNDERGROUND UTILITIES AND OSHA SAFETY NOTE:

Underground utilities and structures have been plotted from available information and therefore, their location must be considered approximate only. It is the responsibility of the individual contractors to notify the utility companies before actual construction. All O.S.H.A rules and regulations established for the type of construction required by these plans shall be strictly followed (ie. trenching, blasting, etc.)

EROSION CONTROL SYMBOL LEGEND

Symbol	Description
	LEASE LINE/PROPERTY LINE
	STORM PIPE
—100—	EXISTING CONTOUR
—100—	PROPOSED CONTOUR
LD	LIMITS OF ANTICIPATED DISTURBED AREA / CONSTRUCTION LIMITS
SF	SILT FENCE (REFERENCE DRAWING 806-70.00 ON SHEET C-402)
GB	GRAVEL OR SAND BAG PROTECTION (REFERENCE DRAWING 806-45.08 ON SHEET C-402)
CE	CONSTRUCTION EXIT (REFERENCE DRAWING 806-46.01 ON SHEET C-402)
WD	CONSTRUCTION WASHDOWN STATION (REFERENCE DRAWING 806-46.00 ON SHEET C-402)
SD	SEEDING / SOD
IP	INLET PROTECTION (REFERENCE DRAWING 806-45.12 ON SHEET C-402)
PS	PERMIT SIGN (REFERENCE DETAIL SHEET C-402)

CONSTRUCTION SEQUENCING ACTIVITIES:

- INSTALL PROJECT SIGN & POST PERMITS
- INSTALL SILT & CONSTRUCTION FENCING
- INSTALL INLET PROTECTION
- INSTALL CONSTRUCTION ENTRANCE / EXIT
- INSTALL VEHICULAR WASH DOWN AREA
- BEGIN EXCAVATION & SITE DEMOLITION
- BEGIN BUILDING FOOTINGS & FOUNDATIONS
- BEGIN UTILITY TRENCHING & EXCAVATION
- PARKING & DRIVE AREA PAVING
- FINISHED GRADING & LANDSCAPING
- SEEDING & SOD WORK
- REMOVAL OF EROSION CONTROL AND OTHER BMP's

NOTES:

1. REFER TO THE EROSION CONTROL DETAIL SHEET & STORMWATER POLLUTION PREVENTION NARRATIVE FOR ADDITIONAL NOTES AND REQUIREMENTS.
2. THE GENERAL CONTRACTOR SHALL OBTAIN A COPY OF THE NPDES PERMIT ISSUED FOR THE SITE AND POST IT AT THE PROJECT SITE PRIOR TO ANY LAND DISTURBING ACTIVITIES. REFER TO SITE SIGN DETAIL ON THE EROSION CONTROL DETAIL SHEET.
3. CONTRACTOR SHALL INSTALL BMP'S NOTED ON THIS PLAN PRIOR TO BEGINNING ANY LAND DISTURBING, DEMOLITION, OR TREE REMOVAL ACTIVITIES.
4. THE CONTRACTOR SHALL INSTALL CONSTRUCTION ENTRANCE/EXIT AND MAINTAIN THESE ENTRANCES DURING CONSTRUCTION.
5. THE JOB SITE TRAILER, DUMPSTER, FUELING AREA, STORAGE & LAY-DOWN AREA SHALL BE LOCATED BY THE GENERAL CONTRACTOR AT THE START OF CONSTRUCTION. THESE ITEMS MUST BE NOTED BY THE CONTRACTOR ON THE SWPPP DRAWINGS.
6. SOIL STOCKPILES AND DEMOLITION DEBRIS STOCKPILES SHALL HAVE SILT FENCES INSTALLED IF LEFT ON SITE & UNDISTURBED FOR MORE THAN 13 DAYS.

ALL PROJECT SITES ARE REQUIRED TO COMPLY WITH REQUIREMENTS OF THE "CLEAN WATER ACT" ESTABLISHED BY THE US ENVIRONMENTAL PROTECTION AGENCY.

THE EPA's NATIONAL POLLUTION DISCHARGE ELIMINATION SYSTEM (NPDES) PROGRAM REQUIRES PERMITS TO BE ISSUED BY REGULATORY AGENCIES WHEN PROJECT SITES DISTURB 1 ACRE OR MORE.

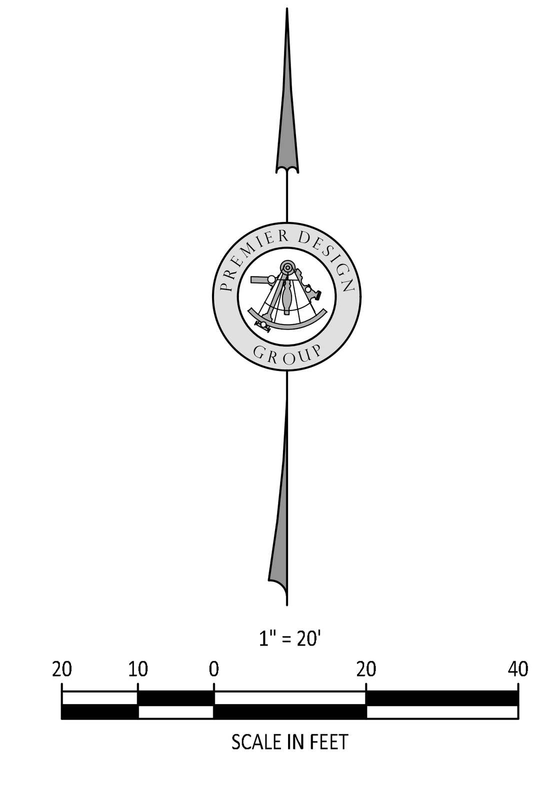

PREMIER DESIGN GROUP
100 MIDLAND PARK DRIVE
WENTZVILLE, MO 63385
MISSOURI CERTIFICATE OF AUTHORITY #E-2011000031
MISSOURI CERTIFICATE OF AUTHORITY #LS-2012007849

STATE OF MISSOURI — STEVE MARION — NUMBER PE2006007195 — PROFESSIONAL ENGINEER — 10/5/2021

ENGINEERS AUTHENTICATION

The responsibility for professional engineering liability on this project is hereby limited to the set of plans authenticated by the seal, signature, and date hereunder attached. Responsibility is disclaimed for all other engineering plans involved in this project and specifically excludes revisions after this date unless reauthenticated.

STEVEN D. MARION P.E.
PROFESSIONAL ENGINEER
PE 2006007195

Project: DUTCH BROS
LEE'S SUMMIT, MO
500 NW CHIPMAN RD.
LEE'S SUMMIT, MO 64086
TM CROWLEY
501 PENNSYLVANIA PARKWAY SUITE 160
INDIANAPOLIS, IN 46280

Date	9-30-2021

#	Revision Date	Description of Changes

Sheet Title: INITIAL EROSION CONTROL PLAN

Sheet Number: C-400

Project No.	2109720
Drawn By	A. JONES
Checked By	M. FOGARTY

NOT RELEASED FOR CONSTRUCTION

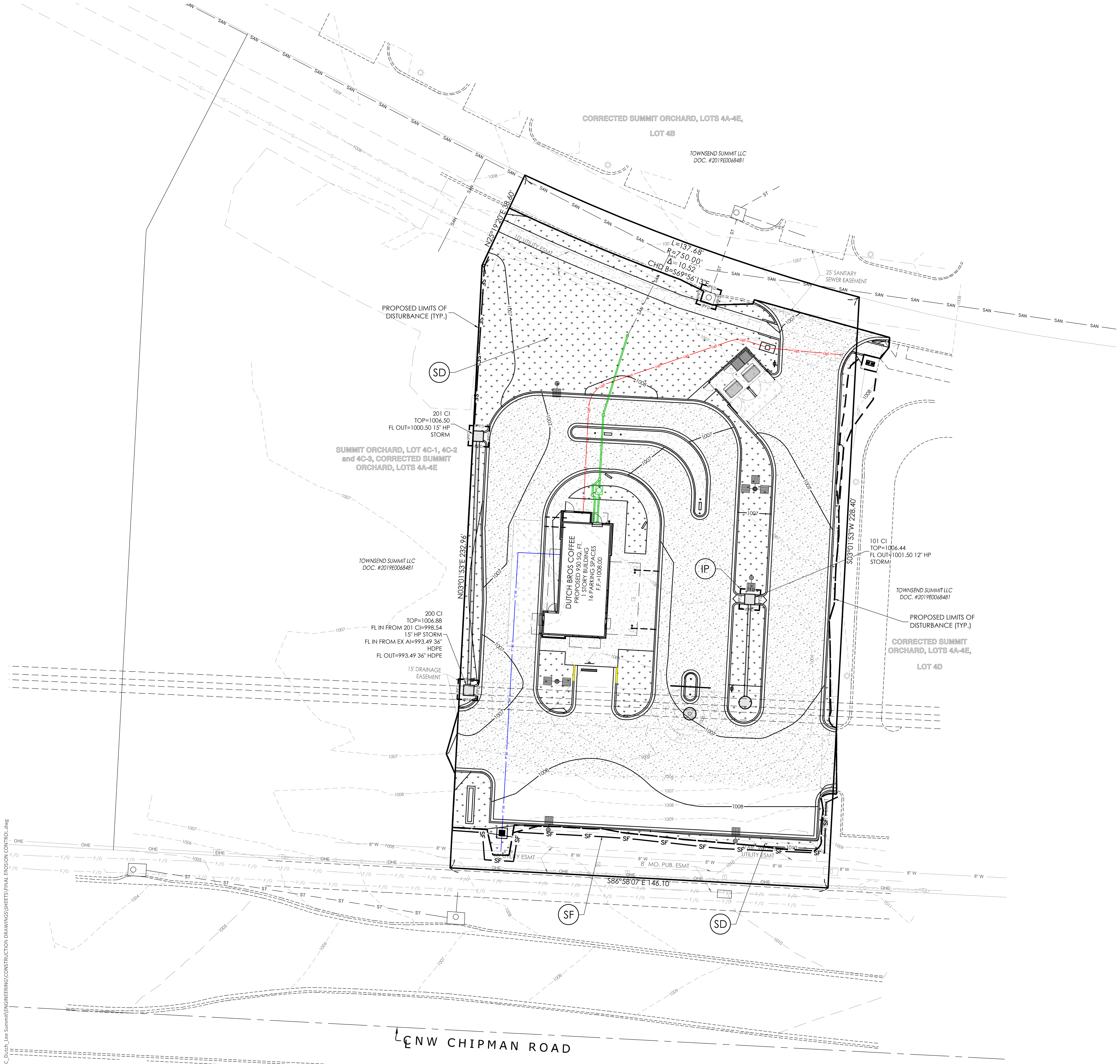

"Little MO" says
CALL
BEFORE
YOU DIG!
1-800-DIG-RITE

UNDERGROUND UTILITIES AND OSHA SAFETY NOTE:

Underground utilities and structures have been plotted from available information and therefore, their location must be considered approximate only. It is the responsibility of the individual contractors to notify the utility companies before actual construction. All O.S.H.A rules and regulations established for the type of construction required by these plans shall be strictly followed (i.e. trenching, blasting, etc.)

EROSION CONTROL SYMBOL LEGEND

Symbol	Description
	LEASE LINE/PROPERTY LINE
	STORM PIPE
	EXISTING CONTOUR
	PROPOSED CONTOUR
LD	LIMITS OF ANTICIPATED DISTURBED AREA / CONSTRUCTION LIMITS
SF	SILT FENCE (REFERENCE DRAWING 806-70.00 ON SHEET C-402)
GB	GRAVEL OR SAND BAG PROTECTION (REFERENCE DRAWING 806-45.08 ON SHEET C-402)
CE	CONSTRUCTION EXIT (REFERENCE DRAWING 806-46.01 ON SHEET C-402)
WD	CONSTRUCTION WASHDOWN STATION (REFERENCE DRAWING 806-46.00 ON SHEET C-402)
SD	SEEDING / SOD/MULCH
IP	INLET PROTECTION (REFERENCE DRAWING 806-45.12 ON SHEET C-402)
PS	PERMIT SIGN (REFERENCE DETAIL SHEET C-402)

CONSTRUCTION SEQUENCING ACTIVITIES:

- INSTALL PROJECT SIGN & POST PERMITS
- INSTALL SILT & CONSTRUCTION FENCING
- INSTALL INLET PROTECTION
- INSTALL CONSTRUCTION ENTRANCE / EXIT
- INSTALL VEHICULAR WASH DOWN AREA
- BEGIN EXCAVATION & SITE DEMOLITION
- BEGIN BUILDING FOOTINGS & FOUNDATIONS
- BEGIN UTILITY TRENCHING & EXCAVATION
- PARKING & DRIVE AREA PAVING
- FINISHED GRADING & LANDSCAPING
- SEEDING & SOD WORK
- REMOVAL OF EROSION CONTROL AND OTHER BMP's

NOTES:

1. REFER TO THE EROSION CONTROL DETAIL SHEET & STORMWATER POLLUTION PREVENTION NARRATIVE FOR ADDITIONAL NOTES AND REQUIREMENTS.
2. THE GENERAL CONTRACTOR SHALL OBTAIN A COPY OF THE NPDES PERMIT ISSUED FOR THE SITE AND POST IT AT THE PROJECT SITE PRIOR TO ANY LAND DISTURBING ACTIVITIES. REFER TO SITE SIGN DETAIL ON THE EROSION CONTROL DETAIL SHEET.
3. CONTRACTOR SHALL INSTALL BMP'S NOTED ON THIS PLAN PRIOR TO BEGINNING ANY LAND DISTURBING, DEMOLITION, OR TREE REMOVAL ACTIVITIES.
4. THE CONTRACTOR SHALL INSTALL CONSTRUCTION ENTRANCE/EXIT AND MAINTAIN THESE ENTRANCES DURING CONSTRUCTION.
5. THE JOB SITE TRAILER, DUMPSTER, FUELING AREA, STORAGE & LAY-DOWN AREA SHALL BE LOCATED BY THE GENERAL CONTRACTOR AT THE START OF CONSTRUCTION. THESE ITEMS MUST BE NOTED BY THE CONTRACTOR ON THE SWPPP DRAWINGS.
6. SOIL STOCKPILES AND DEMOLITION DEBRIS STOCKPILES SHALL HAVE SILT FENCES INSTALLED IF LEFT ON SITE & UNDISTURBED FOR MORE THAN 13 DAYS.

ALL PROJECT SITES ARE REQUIRED TO COMPLY WITH REQUIREMENTS OF THE "CLEAN WATER ACT" ESTABLISHED BY THE US ENVIRONMENTAL PROTECTION AGENCY.

THE EPA's NATIONAL POLLUTION DISCHARGE ELIMINATION SYSTEM (NPDES) PROGRAM REQUIRES PERMITS TO BE ISSUED BY REGULATORY AGENCIES WHEN PROJECT SITES DISTURB 1 ACRE OR MORE.

1" = 20'

20 10 0 20 40

SCALE IN FEET

PREMIER
DESIGN GROUP
100 MIDLAND PARK DRIVE
WENTZVILLE, MO 63385
MISSOURI CERTIFICATE OF AUTHORITY #1-2011000031
MISSOURI CERTIFICATE OF AUTHORITY #LS-2012007849

STATE OF MISSOURI
STEVE
MARION
NUMBER
PE2006007195
PROFESSIONAL ENGINEER

ENGINEERS AUTHENTICATION
The responsibility for professional engineering liability on this project is hereby limited to the set of plans authenticated by the seal, signature, and date hereunder attached. Responsibility is disclaimed for all other engineering plans involved in this project and specifically excludes revisions after this date unless reauthenticated.
STEVEN D. MARION P.E.
PROFESSIONAL ENGINEER
PE 2006007195

Project
DUTCH BROS
LEE'S SUMMIT, MO
500 NW CHIPMAN RD.
LEE'S SUMMIT, MO 64086
TM CROWLEY
501 PENNSYLVANIA PARKWAY SUITE 160
INDIANAPOLIS, IN 46280

Date 9-30-2021

#	Revision Date	Description of Changes

Sheet Title
FINAL EROSION CONTROL PLAN

Sheet Number
C-401

Project No.	2109720
Drawn By	A. JONES
Checked By	M. FOGARTY

NOT RELEASED FOR CONSTRUCTION

GENERAL EROSION AND SEDIMENTATION CONTROL NOTES:

1. THE CONTRACTOR IS RESPONSIBLE FOR OBTAINING A COPY OF THE LAND DISTURBANCE PERMIT FOR THIS SITE PRIOR TO THE START OF CONSTRUCTION. A LAND DISTURBANCE PERMIT FROM THE MISSOURI DEPARTMENT OF NATURAL RESOURCES WILL BE REQUIRED. A GRADING PERMIT FROM THE CITY OF CITY OF LEE'S SUMMIT WILL BE REQUIRED.
2. THE CONTRACTOR SHALL KEEP & MAINTAIN A COPY OF THE LAND DISTURBANCE PERMIT(S), EROSION CONTROL PLANS, AND STORMWATER POLLUTION PREVENTION PLAN (SWPPP) AT THE PROJECT SITE DURING CONSTRUCTION.
3. ALL EROSION CONTROL MEASURES MUST MEET LOCAL REQUIREMENTS AND THE "PROTECTING WATER QUALITY, A FIELD GUIDE TO EROSION, SEDIMENT AND STORM WATER BEST MANAGEMENT PRACTICES FOR DEVELOPMENT SITES IN MISSOURI AND KANSAS". THE DOCUMENT IS AVAILABLE FROM THE MISSOURI DEPARTMENT OF NATURAL RESOURCES AND CAN BE DOWNLOADED FROM THE DNR WEBSITE AT HTTP:/WWW.DNR.MO.GOV/ENV/WPP/WPCP-GUIDE.HTM.
4. PRIOR TO THE START OF ANY LAND DISTURBING ACTIVITIES, EROSION AND SEDIMENT CONTROL MEASURES AND APPLICABLE BMPS SHALL BE INSTALLED.
5. THE CONTRACTOR SHALL NOTIFY THE CITY ENGINEER A MINIMUM OF 48 HOURS PRIOR TO THE START OF GRADING SO THAT SITE BMPS CAN BE VERIFIED.
6. THE GENERAL CONTRACTOR SHALL HAVE ULTIMATE CONTROL OF THE SITE AND REQUIRE THAT ALL SUBCONTRACTORS, UTILITY COMPANIES, AND ANY PERSON PERFORMING LAND DISTURBING ACTIVITIES CONFORM TO THE REQUIREMENTS OF THE PERMITS ISSUED FOR THE SITE. THIS INCLUDES CONFORMANCE TO THE STORM WATER POLLUTION PLAN PREPARED & MAINTAINED FOR THE SITE.
7. THE CONTRACTOR IS RESPONSIBLE FOR MANAGING STORM WATER RUNOFF AND EROSION THROUGHOUT CONSTRUCTION.
8. THIS EROSION CONTROL PLAN HAS BEEN PREPARED AS A BEGINNING POINT AND SHOULD EVOLVE AS SITE CONDITIONS WARRANT. THE GENERAL CONTRACTOR SHALL IMPLEMENT ADDITIONAL BMPS AS DEEMED NECESSARY TO ADEQUATELY RETAIN SEDIMENT ON-SITE.
9. THE CONTRACTOR SHALL MAINTAIN AND PROTECT EXISTING TREES AND VEGETATION.
10. CONSTRUCTION MATERIAL STORAGE AND LAY-DOWN AREAS ARE TO BE AWAY FROM DRAINAGE COURSES AND LOW AREAS.
11. PROVIDE CONTAINERS FOR THE DISPOSAL OF WASTE PAINTS, SOLVENTS, CLEANING COMPOUNDS, ETC.
12. PROVIDE TRASH CONTAINERS ONSITE AND PERFORM REGULAR SITE CLEAN UP FOR PROPER DISPOSAL OF SOLID WASTE. SOLID WASTE SHALL INCLUDE, BUT NOT BE LIMITED TO, SCRAP BUILDING MATERIALS, PRODUCT/MATERIAL PACKAGING, FOOD AND DRINK CONTAINERS.
13. THE CONTRACTOR SHALL INSTALL CONTAINMENT BERMS & DRIP PANS AT PETROLEUM PRODUCT & LIQUID STORAGE TANK AREAS.
14. THE CONTRACTOR SHALL PROVIDE CONCRETE WASH OUT AREAS. CONCRETE TRUCKS SHALL NOT DISCHARGE SURPLUS CONCRETE OR WASH WATER ON THE GROUND OR INTO DITCHES. CONCRETE WASH-OUT AREAS SHALL BE DESIGNED TO ENSURE CONCRETE PARTICLES WILL NOT BE RELEASED FROM THE CONSTRUCTION SITE.
15. THE CONTRACTOR SHALL IMPLEMENT DUST CONTROL MEASURES IF CONDITIONS WARRANT. DUST CONTROL MAY INCLUDE WATERING/IRRIGATION, WIND BARRIERS, SPRAY ON ADHESIVES, TILLING, OR CHEMICAL TREATMENT. ANY CLEANUP TO ADJACENT PROPERTIES DUE TO INADEQUATE DUST CONTROL WILL BE THE CONTRACTOR'S RESPONSIBILITY.
16. THE CONTRACTOR SHALL PROVIDE FOR SOLID WASTE/TRASH COLLECTION. THE CONSTRUCTION SITE SHALL BE KEPT CLEAN AND ORDERLY.
17. THE CONTRACTOR SHALL PROVIDE FOR SANITARY WASTE COLLECTION DURING CONSTRUCTION. PORTA POTTIES SHALL BE LOCATED BY THE CONTRACTOR AND NOTED ON THE DRAWINGS.

CONSTRUCTION SWPPP LOG

1. THE CONTRACTOR SHALL DEVELOP A CONSTRUCTION SWPPP LOG AT THE START OF CONSTRUCTION. THE CONSTRUCTION SWPPP LOG SHALL INCLUDE INSTALLATION DATES OF BMP'S, MAINTENANCE RECORDS, RAINFALL RECORDS, AND ANY ITEM THAT ADDRESSES THE MANAGEMENT OF STORM WATER POLLUTION PREVENTION MEASURES AT THE PROJECT SITE.
2. REFER TO THE SWPPP DOCUMENT/NARRATIVE FOR FORMS AND OTHER DETAILED INFORMATION REGARDING STORM WATER POLLUTION PREVENTION PRACTICES.
3. THE SWPPP LOG SHALL BE KEPT ON THE JOB SITE AND SHALL BE MADE AVAILABLE FOR REVIEW AT THE REQUEST OF APPLICABLE GOVERNING AUTHORITIES.
4. BMP's SHALL BE INSPECTED ONCE A WEEK AND WITHIN 24 HRS OF RAIN EVENTS OF 1/2" OR GREATER. INSPECTIONS ARE TO BE DOCUMENTED IN THE SWPPP LOG. REPAIR AND MAINTENANCE TO BMP'S SHALL BE DONE IMMEDIATELY.
5. THE CONTRACTOR SHALL SUBMIT AN INSPECTION REPORT WITHIN 72 HOURS AFTER EVERY STORM EVENT TO THE CITY ENGINEER.
6. THE CONTRACTOR SHALL ENSURE THE SITE CONFORMS TO THE REQUIREMENTS OF THE LAND DISTURBANCE PERMIT AND INSTALL ADDITIONAL BMP'S SHOULD SITE CONDITIONS WARRANT.
7. AFTER CONSTRUCTION, THE CONSTRUCTION SWPPP LOG SHALL BE RETAINED BY THE CONTRACTOR FOR A MINIMUM OF 3 YEARS.

FINAL SITE STABILIZATION

1. ONCE GRADED AREAS ARE CONSTRUCTED TO FINAL GRADES, PERMANENT STABILIZATION SHALL BE ESTABLISHED.
2. THE CONTRACTOR SHALL RESTORE OFF-SITE AREAS DAMAGED BY CONSTRUCTION TO A CONDITION, EQUAL TO, OR BETTER THAN THE CONDITION PRIOR TO THE COMMENCEMENT OF CONSTRUCTION.
3. ALL EROSION CONTROL BMP's SHALL REMAIN IN PLACE UNTIL THE SITE HAS BEEN PERMANENTLY STABILIZED.
4. ONCE THE SITE HAS REACH FINAL STABILIZATION, THE CONTRACTOR IS TO CLEAN AND REMOVE DEBRIS FROM BMP'S AND STORM WATER COLLECTION AREAS. BMP'S ARE THEN TO BE REMOVED.

POTENTIAL POLLUTANTS THAT MAY BE FOUND ON SITE DURING CONSTRUCTION:

Material Trade Name	Chemical/Physical Description	Storm Water Pollutants
Erosion	Solid Particles	Soil, sediment
Fertilizer	Liquid or solid grains	Nitrogen, phosphorus
Pesticides (insecticides, fungicides, herbicides, rodenticides)	Various colored to colorless liquid, powder, pellets, or grains	Chlorinated hydrocarbons, organophosphates, carbonates, arsenic
Asphalt	Black solid	Oil, petroleum distillates
Concrete	White solid	Limestone, sand
Plaster	White granules or powder	Calcium Sulphate, calcium carbonate, sulfuric acid
Glue, adhesives	White or yellow liquid	Polymers, epoxies
Paints	Various colored liquid	Metal oxides, Stoddard solvent, talc, calcium carbonate, arsenic
Curing compounds	Creamy white liquid	Naphtha
Wood preservatives	Clear amber or dark brown liquid	Stoddard solvent, petroleum distillates, arsenic, copper, chromium.
Hydraulic oil/fluids	Brown oily petroleum hydrocarbon	Mineral oil
Gasoline	Colorless, pale brown or pink petroleum hydrocarbon	Benzene, ethyl benzene, toluene, xylene, MTBE
Diesel Fuel	Clear, blue-green to yellow liquid	Petroleum distillate, oil & grease, naphthalene, xylenes
Antifreeze/coolant	Clear green/yellow liquid	Ethylene glycol, propylene glycol, heavy metals (copper, lead, zinc)

MATERIALS STORED ON SITE:

1. ALL MATERIALS STORED ON-SITE SHALL BE STORED IN A NEAT, ORDERLY MANNER IN THEIR APPROPRIATE CONTAINERS. IF POSSIBLE, MATERIALS SHALL BE STORED UNDER A ROOF OR OTHER ENCLOSURE.
2. PRODUCTS SHALL BE KEPT IN THEIR ORIGINAL CONTAINERS WITH THE MANUFACTURER'S LABEL. SUBSTANCES SHALL NOT BE MIXED WITH ONE ANOTHER UNLESS RECOMMENDED BY THE MANUFACTURER. WHENEVER POSSIBLE, ALL OF THE PRODUCT SHALL BE USED UP BEFORE DISPOSING OF THE CONTAINER. THE MANUFACTURER'S RECOMMENDATIONS FOR THE PROPER USE AND DISPOSAL OF THEIR PRODUCTS SHALL BE FOLLOWED. THE CONSTRUCTION MANGER SHALL INSPECT THE ON-SITE MATERIALS DAILY TO ENSURE THE PROPER USE AND DISPOSAL.
3. HAZARDOUS PRODUCTS SHALL BE KEPT IN RESEALABLE CONTAINERS. ORIGINAL LABELS AND MATERIAL SAFETY DATA SHALL BE RETAINED. ALL FEDERAL, STATE AND CITY REGULATIONS SHALL BE FOLLOWED WHEN DISPOSING OF ANY HAZARDOUS WASTE.

"Little MO" says CALL BEFORE YOU DIG! 1-800-DIG-RITE

UNDERGROUND UTILITIES AND OSHA SAFETY NOTE:

Underground utilities and structures have been plotted from available information and therefore, their location must be considered approximate only. It is the responsibility of the individual contractors to notify the utility companies before actual construction. All O.S.H.A rules and regulations established for the type of construction required by these plans shall be strictly followed (ie. trenching, blasting, etc.)

\\Vault-pc\vault\CIVIL 3D PROJECTS\2021\2109720_TMC_Dutch_Lee Summit\ENGINEERING\CONSTRUCTION DRAWINGS\SHEETS\C-403 EROSION CONTROL DETAILS.dwg

MAINTENANCE OF EROSION AND SEDIMENTATION CONTROLS:

1. SILT FENCING SHALL BE INSPECTED DAILY DURING PERIODS OF RAINFALL, IMMEDIATELY AFTER EACH SIGNIFICANT RAINFALL EVENT, AND WEEKLY DURING PERIODS OF NO RAINFALL. REPAIRS TO SILT FENCES SHALL BE DONE IMMEDIATELY. SEDIMENT SHALL BE REMOVED FROM THE SILT FENCES WHEN THE SEDIMENT REACHES ONE-HALF THE HEIGHT OF THE SILT FENCE.
2. THE STABILIZED CONSTRUCTION ENTRANCE SHALL BE INSPECTED REGULARLY, AFTER EVERY RAINFALL EVENT, AND DURING HIGH VOLUMES OF TRAFFIC. REPAIRS TO THE CONSTRUCTION ENTRANCE SHALL BE MADE IMMEDIATELY. ALL SEDIMENTS, AND ALL OTHER MATERIALS, TRACKED ONTO PUBLIC ROADWAYS SHALL BE REMOVED IMMEDIATELY.
3. SELECT STOCKPILE LOCATION TO AVOID SLOPES AND NATURAL DRAINAGE WAYS, AVOIDING TRAFFIC ROUTES. ON LARGE SITES, RE-SPREADING IS EASIER AND MORE ECONOMICAL WHERE TOPSOIL IS STOCKPILED IN SMALL PILES LOCATED NEAR AREAS WHERE THEY WILL BE USED.
4. INSPECT AND MAINTAIN ALL BMPS LOCATED DOWN HILL OF AREA BEING GRADED, AS INDICATED. ADDITIONAL BMPS SHOULD BE CONSTRUCTED IF IT IS OBSERVED THAT THE PROPOSED BMPS ARE NOT EFFECTIVELY LIMITING SEDIMENT TRANSPORT FROM THE SITE. TYPICAL BMPS THAT MIGHT BE UTILIZED INCLUDE, BUT ARE NOT LIMITED TO:
   - SEDIMENT BARRIERS - USE SILT FENCES, STRAW BALE SEDIMENT TRAPS OR OTHER BARRIERS WHERE NECESSARY TO RETAIN SEDIMENT
   - TEMPORARY SEEDING - PROTECT TOPSOIL STOCKPILES BY TEMPORARILY SEEDING AS SOON AS POSSIBLE, NO MORE THAN 14 CALENDAR DAYS AFTER THE FORMATION OF THE STOCKPILE
   - PERMANENT VEGETATION - IF STOCKPILES WILL NOT BE USED WITHIN 12 MONTHS, THEY MUST BE STABILIZED WITH PERMANENT VEGETATION TO CONTROL EROSION AND WEED GROWTH

SPILL CONTROL OF POLLUTANTS:

1. ALL ON-SITE VEHICLES SHALL BE MONITORED FOR LEAKS AND SHALL RECEIVE REGULAR PREVENTATIVE MAINTENANCE TO REDUCE THE CHANCE OF LEAKAGE.
2. CONCRETE TRUCKS SHALL ONLY WASH-OUT OR DISCHARGE SURPLUS CONCRETE, OR DRUM-WASH WATER, AT DEDICATED CONCRETE TRUCK WASH-OUT AREAS. NO EXCESS CONCRETE OR DRUM WASH WATER SHALL BE RELEASED FROM THE SITE.
3. PETROLEUM PRODUCTS SHALL BE STORED IN TIGHTLY SEALED CONTAINERS WHICH ARE CLEARLY LABELED.
4. ALL ASPHALTIC SUBSTANCES USED ON-SITE SHALL BE APPLIED ACCORDING TO THE MANUFACTURERS RECOMMENDATIONS.
5. FERTILIZERS SHALL BE APPLIED ONLY IN THE MINIMUM AMOUNTS RECOMMENDED BY THE MANUFACTURER. ONCE APPLIED, FERTILIZER SHALL BE WORKED INTO THE SOIL TO LIMIT EXPOSURE TO STORM WATER. THE CONTENTS OF ANY PARTIALLY USED BAGS OF FERTILIZER SHALL BE TRANSFERRED TO A SEALABLE PLASTIC CONTAINER TO AVOID SPILLS.
6. ALL SPILLS SHALL BE CLEANED UP IMMEDIATELY AFTER DISCOVERY. THE MANUFACTURER'S RECOMMENDED METHODS FOR SPILL CLEANUP SHALL BE RELAYED TO SITE PERSONNEL AND THEY SHALL BE MADE AWARE OF THE LOCATION OF THE CLEANUP SUPPLIES. MATERIALS AND EQUIPMENT NECESSARY FOR SPILL CLEANUP SHALL BE STORED ON-SITE. IN CASE OF A SPILL, THE SPILL AREA SHALL BE KEPT WELL VENTILATED AND CLEANUP PERSONNEL SHALL WEAR THE APPROPRIATE CLOTHING TO PREVENT INJURY FROM CONTACT WITH THE HAZARDOUS SUBSTANCE. SPILLS OF TOXIC AND HAZARDOUS MATERIAL, REGARDLESS OF THE SIZE OF THE SPILL, SHALL BE REPORTED TO THE APPROPRIATE STATE AND LOCAL GOVERNMENT AGENCIES IMMEDIATELY AFTER DISCOVERY.

CONSTRUCTION ENTRANCE (CE)

1. THE LOCATION OF A CONSTRUCTION ENTRANCE/EXIT HAS BEEN SHOWN ON THE EROSION CONTROL PLAN(S). THE CONTRACTOR SHALL INSTALL OR ESTABLISH A DESIGNATED CONSTRUCTION ENTRANCE/EXIT AT THE START OF CONSTRUCTION. IN THE EVENT THE ENTRANCE IS LOCATED IN A DIFFERENT LOCATION, THE CONTRACTOR SHALL UPDATE THE EROSION CONTROL PLAN.
2. A PERMIT SIGN SHALL BE INSTALLED AT OR NEAR THE CONSTRUCTION ENTRANCE FOR POSTING RELEVANT CONSTRUCTION PERMITS FOR THE PROJECT.
3. AS PART OF THE CONSTRUCTION ENTRANCE, THE CONTRACTOR SHALL INSTALL A VEHICLE WASH DOWN AREA. THE WASH DOWN AREA IS TO PREVENT THE TRACKING OF MUD AND DEBRIS FROM THE PROJECT SITE.
4. TRACKING IS NOT PERMISSIBLE. ANY TRACKING OF MUD AND/OR DEBRIS ONTO OFF-SITE ROADS SHALL BE CLEANED IMMEDIATELY.
5. LOCATION AND FINAL DIMENSIONS OF THE CONSTRUCTION ENTRANCE, WASH DOWN AREA AND STAGING AREAS SHALL BE ESTABLISHED BY THE GENERAL CONTRACTOR.
6. ALL CONSTRUCTION TRAFFIC LEAVING THE PROJECT SITE SHALL UTILIZE THE CONSTRUCTION ENTRANCE/EXIT.

SILT FENCE (SF)

7. SILT FENCE TO BE ADJUSTED AS NECESSARY FOR CONSTRUCTION ACTIVITY.
8. UNLESS NOTED OTHERWISE, SILT FENCE SHALL BE A WOVEN GEOTEXTILE FABRIC SUCH AS MIRAFI 100X OR EQUAL.
9. REFER TO THE SILT FENCE DETAIL FOR INSTALLATION REQUIREMENTS.
10. SILT FENCES SHALL ONLY BE USED FOR STORM WATER SHEET FLOW CONDITIONS.
11. SILT FENCES SHALL FOLLOW CONTOURS AND UTILIZE "J" HOOKS TO HELP TRAP SEDIMENT.
12. SILT FENCES SHALL BE INSPECTED REGULARLY FOR RIPS, TEARS, OR DETERIORATION. DAMAGED FENCE SHALL BE REPLACED.
13. WHEN SEDIMENT BUILDS UP TO ONE HALF THE HEIGHT OF THE FENCE, IT SHALL BE CLEANED AND REINSTALLED.

INLET PROTECTION (IP)

1. REFER TO THE INLET PROTECTION DETAILS FOR VARIOUS TYPES OF INLET PROTECTION. THE CONTRACTOR SHALL HAVE THE OPTION OF UTILIZING ANY TYPES SHOWN OR ACCEPTABLE ALTERNATE.
2. INLET PROTECTION DEVICES SHALL BE INSTALLED IMMEDIATELY AROUND EACH INLET ONCE INLET CONSTRUCTION IS COMPLETED. INLET PROTECTION SHALL REMAIN IN PLACE AND BE MAINTAINED UNTIL THE SITE HAS BEEN CONSIDERED STABLE.

SOD OR SEEDING, MULCHING AND FERTILIZING (SD) (SM)

1. ALL DISTURBED AREAS WHICH REMAIN UNWORKED FOR 14 DAYS, SHALL BE TEMPORARILY STABILIZED.
2. ALL TEMPORARY DIVERSION BERMS, DIVERSION DITCHES AND SOIL STOCKPILE AREAS SHALL BE SEEDED AND MULCHED IMMEDIATELY AFTER GRADING.
3. ALL AREAS DISTURBED DURING CONSTRUCTION, WHICH WILL NOT BE PAVED, SHALL HAVE A MINIMUM OF 4" OF TOPSOIL INSTALLED.
4. GRASSED AREAS SHALL BE EITHER SODDED OR SEEDED AND MULCHED. REFER TO THE SITE AND LANDSCAPING PLANS FOR LOCATIONS OF EACH.
5. ALL RIGHT-OF-WAYS SHALL HAVE SOD INSTALLED. SOD SHALL MEET THE REQUIREMENTS OF THE LOCAL JURISDICTION AND/OR THE DEPARTMENT OF TRANSPORTATION.
6. SOD SHALL BE DROUGHT RESISTANT FESCUE.
7. TEMPORARY IRRIGATION MAY BE REQUIRED TO HELP ESTABLISH SODDED/SEEDED AREAS.
8. THE CONTRACTOR IS RESPONSIBLE FOR MAINTAINING SODDED AND SEEDED AREAS UNTIL A HEALTHY STAND OF GRASS IS ESTABLISHED.
9. FINAL STABILIZATION MUST MEET THE LAND DISTURBANCE PERMIT REQUIREMENTS.

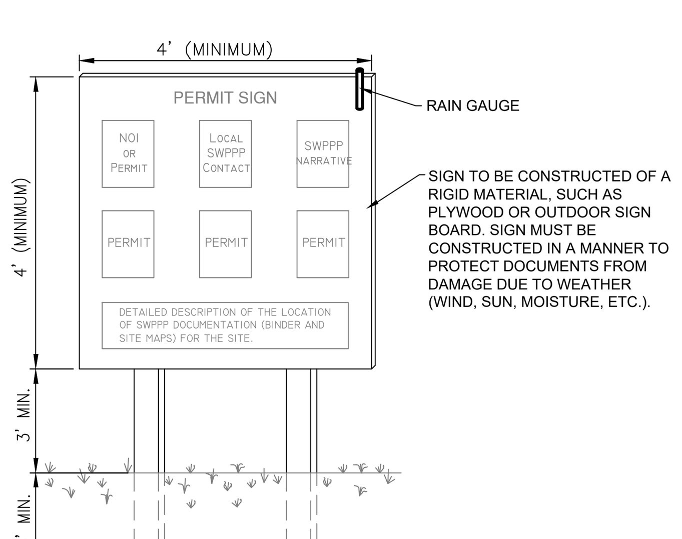

PERMIT SIGN DETAIL

(NOT TO SCALE)

NOTES:

1. THE SWPPP INFORMATION SIGN MUST BE LOCATED NEAR THE CONSTRUCTION EXIT OF THE SITE, SUCH THAT IT IS ACCESSIBLE AND VIEWABLE BY THE GENERAL PUBLIC, BUT NOT OBSTRUCTING VIEWS AS TO CAUSE A SAFETY HAZARD.
2. ALL POSTED DOCUMENTS MUST BE MAINTAINED IN A CLEARLY READABLE CONDITION AT ALL TIMES THROUGHOUT CONSTRUCTION AND UNTIL THE PERMIT HAS BEEN TERMINATED.
3. CONTRACTOR SHALL POST OTHER STORMWATER AND/OR EROSION AND SEDIMENT CONTROL RELATED PERMITS ON THE SIGN AS REQUIRED BY THE GOVERNING AGENCY.
4. SIGN SHALL BE LOCATED OUTSIDE OF PUBLIC RIGHT-OF-WAY AND EASEMENTS UNLESS APPROVED BY THE GOVERNING AGENCY.
5. CONTRACTOR IS RESPONSIBLE FOR ENSURING STABILITY OF THE SWPPP INFORMATION SIGN.

SEEDING REQUIREMENTS

Dates for Seeding

Permanent Seeding	Jan	Feb	March	April	May	June	July	Aug	Sep	Oct	Nov	Dec
Tall Fescue			O	O	O			O	O			
Smooth Brome			O	O	O			O	O			
Fescue & Brome			O	O	O	O		O	O			
Fescue, Rye & Bluegrass	A	A	O	O	O	P	P	O	O	P	P	A

Temporary Seeding	Jan	Feb	March	April	May	June	July	Aug	Sep	Oct	Nov	Dec
Rye or Sudan	A	A	O	O	O	O	O	O	O	O	A	A
Oats		A	O	O	O	O	O	O	O			

O = Optimum seeding dates
A = Acceptable seeding dates
P = Permitted seeding dates with reseeding 2 months later - Initially use 50% of seed and 75% of fertilizer. Reseed with additional 75% seed and remaining fertilizer.

Minimum Fertilizer and Seeding Rates

Permanent Seeding*	Pounds per acre	Pounds Per 1000 sq. ft.
Tall Fescue	300	7.0
Smooth Brome	200	4.6
Mixture # 1	250	5.7
Mixture # 2	210	4.8

Mixture # 1 = Tall Fescue @ 150 pounds per acre and Brome @ 100 pounds per acre.
Mixture # 2 = Tall Fescue @ 100 pounds per acre; Perennial Rye grass @ 100 pounds per acre; and Kentucky Blue grass @ 10 pounds per acre.
* = Seeding rate for slopes in excess of 20% (5:1), shall be 10 pounds per 1000 sq. ft.

Temporary Seeding	Pounds per acre	Pounds Per 1000 sq. ft.
Rye or Sudan	150	3.5
Oats	200	2.5

Fertilizer	Permanent Seeding (pounds per acre)	Temporary Seeding (pounds per acre)
Nitrogen	45	30
Phosphate	65	30
Potassium	65	30
Lime - ENM	600	600

ENM = Effective neutralizing material per State evaluation of quarried rock.

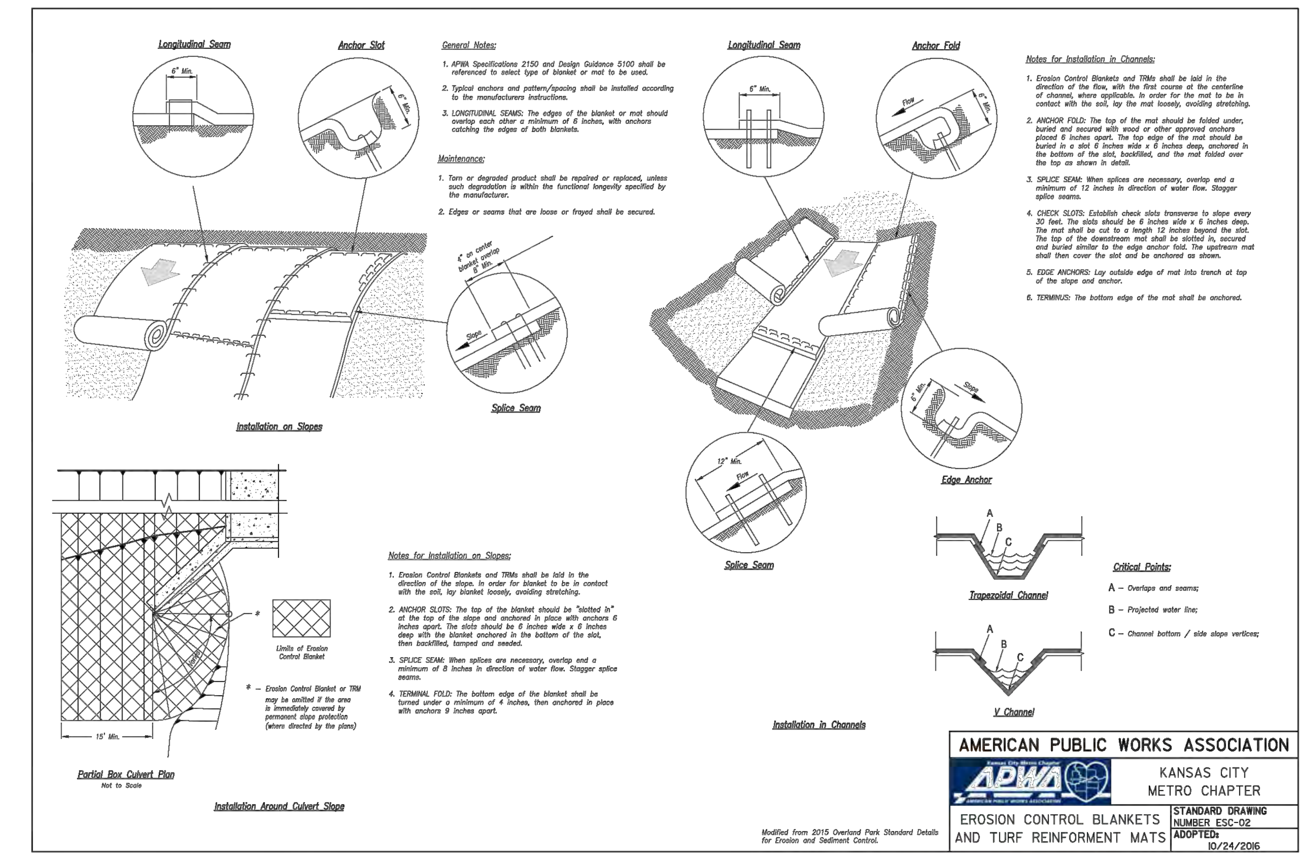

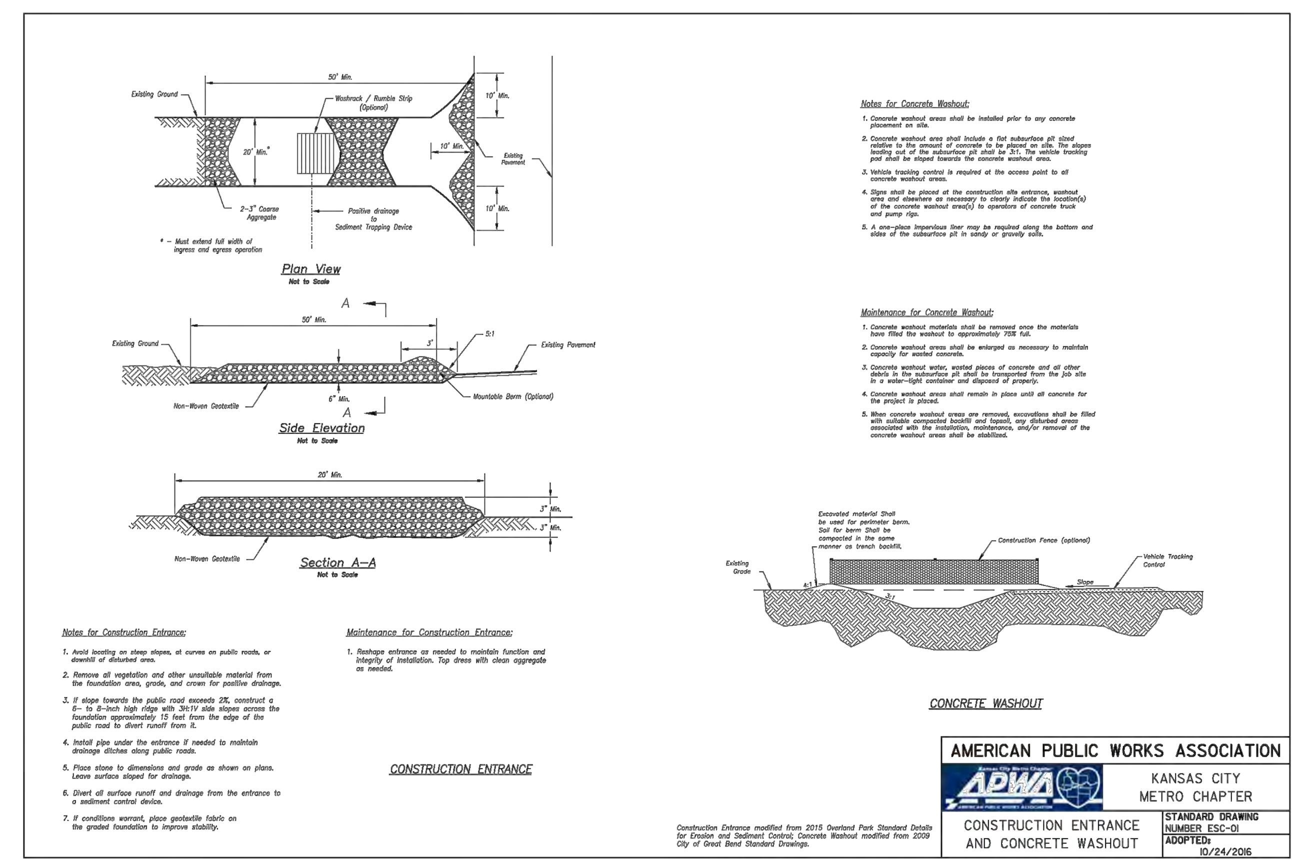

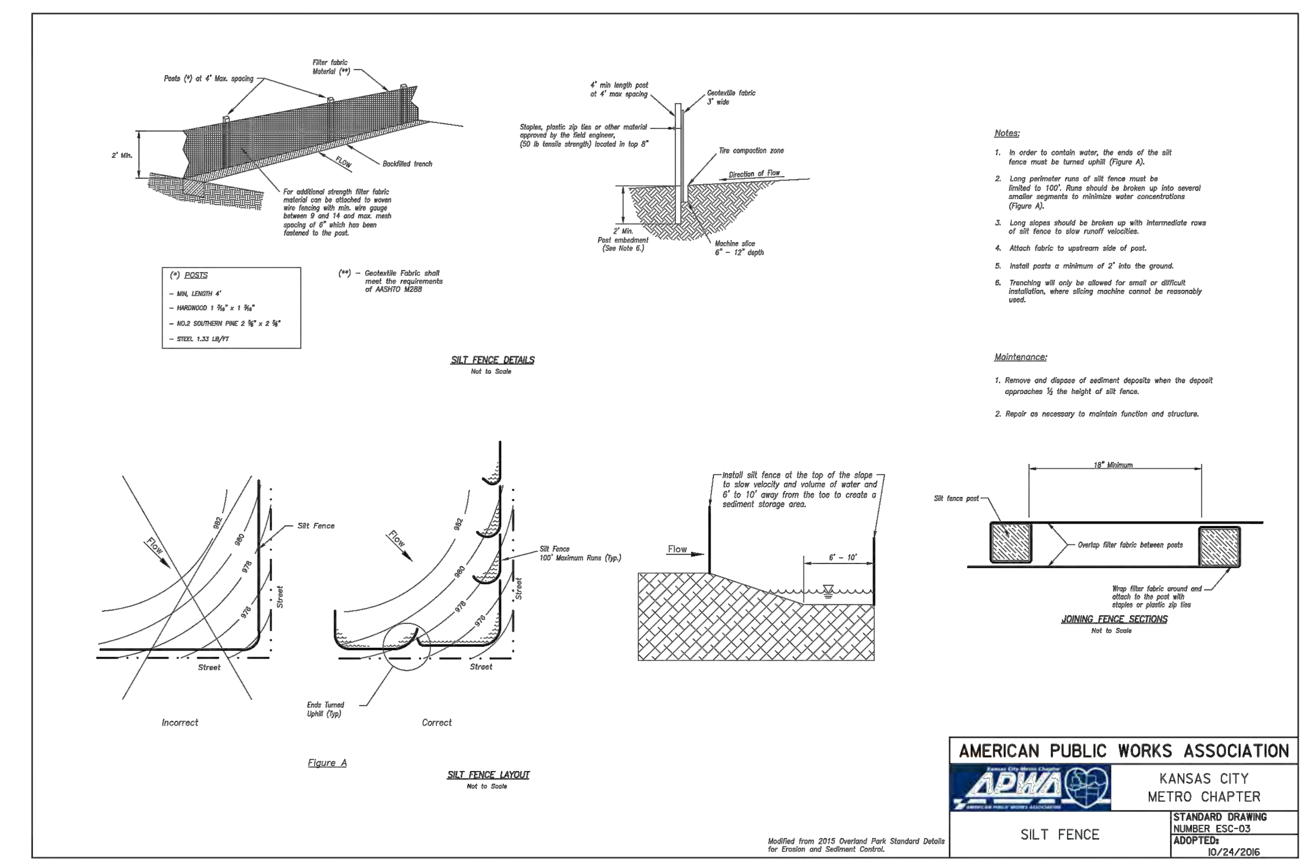

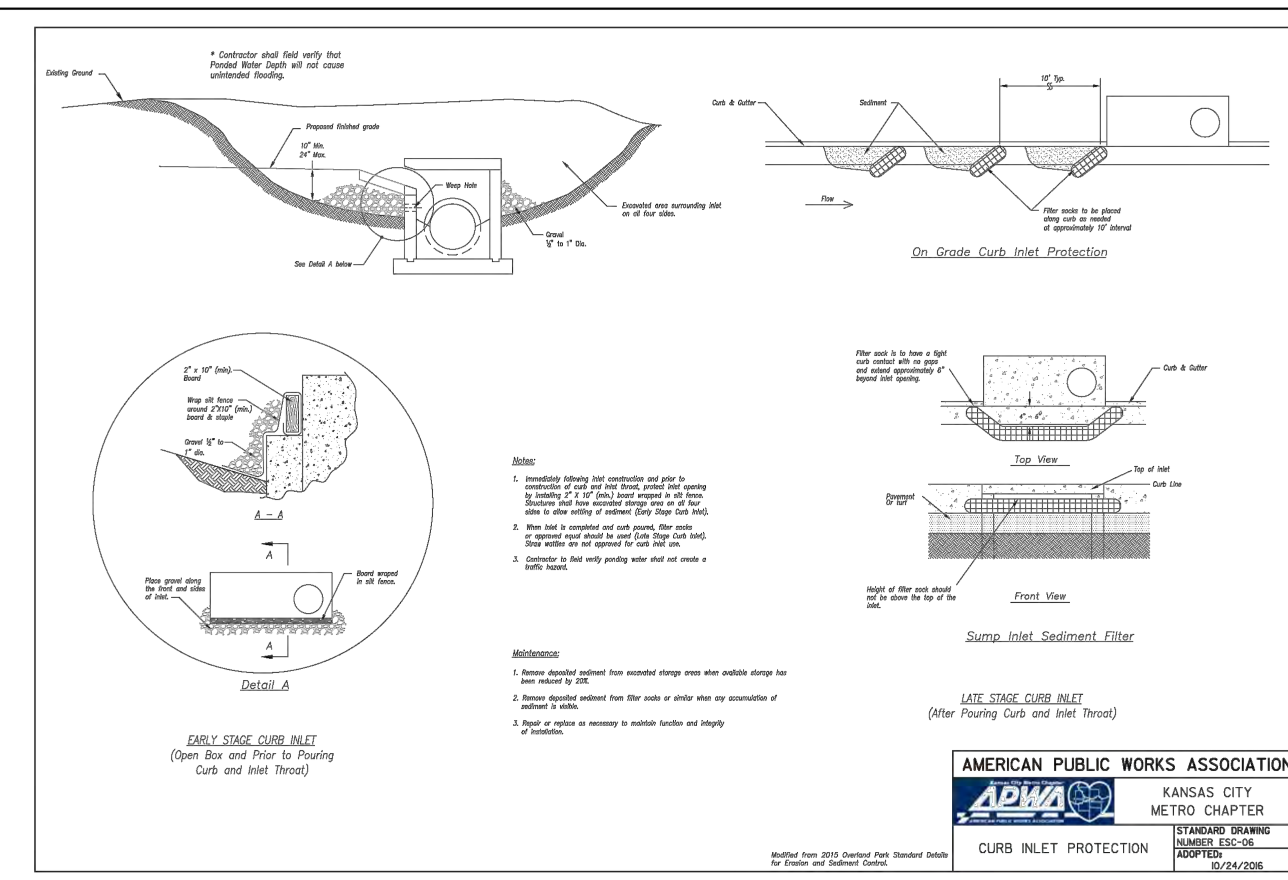

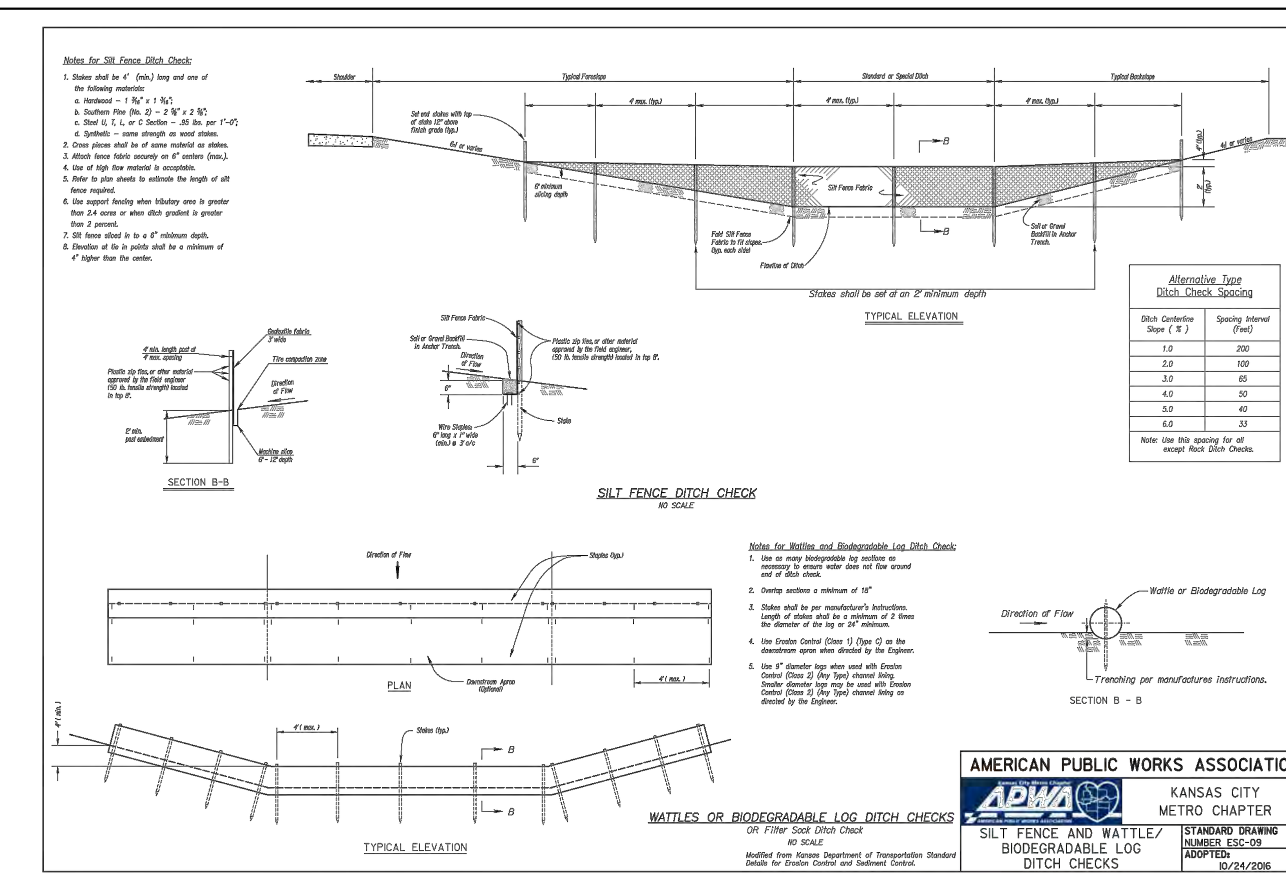

PREMIER DESIGN GROUP
100 MIDLAND PARK DRIVE
WENTZVILLE, MO 63385
MISSOURI CERTIFICATE OF AUTHORITY #1-2011000031
MISSOURI CERTIFICATE OF AUTHORITY #LS-2012007849
MISSOURI CERTIFICATE OF AUTHORITY #LA-2016007538

STATE OF MISSOURI — STEVE MARION — NUMBER PE2006007195 — PROFESSIONAL ENGINEER — 10/5/2021

ENGINEERS AUTHENTICATION
The responsibility for professional engineering liability on this project is hereby limited to the set of plans authenticated by the seal, signature, and date hereunder attached. Responsibility is disclaimed for all other engineering plans involved in this project and specifically excludes revisions after this date unless reauthenticated.
STEVEN D. MARION P.E.
PROFESSIONAL ENGINEER
PE 2006007195

Project
DUTCH BROS
LEE'S SUMMIT, MO
500 NW CHIPMAN RD.
LEE'S SUMMIT, MO 64086
TM CROWLEY
501 PENNSYLVANIA PARKWAY SUITE 160
INDIANAPOLIS, IN 46280

Date: 9-30-2021

#	Revision Date	Description of Changes

Sheet Title: EROSION CONTROL DETAILS

Sheet Number: C-402

Project No.	2109720
Drawn By	A. JONES
Checked By	M. FOGARTY

NOT RELEASED FOR CONSTRUCTION

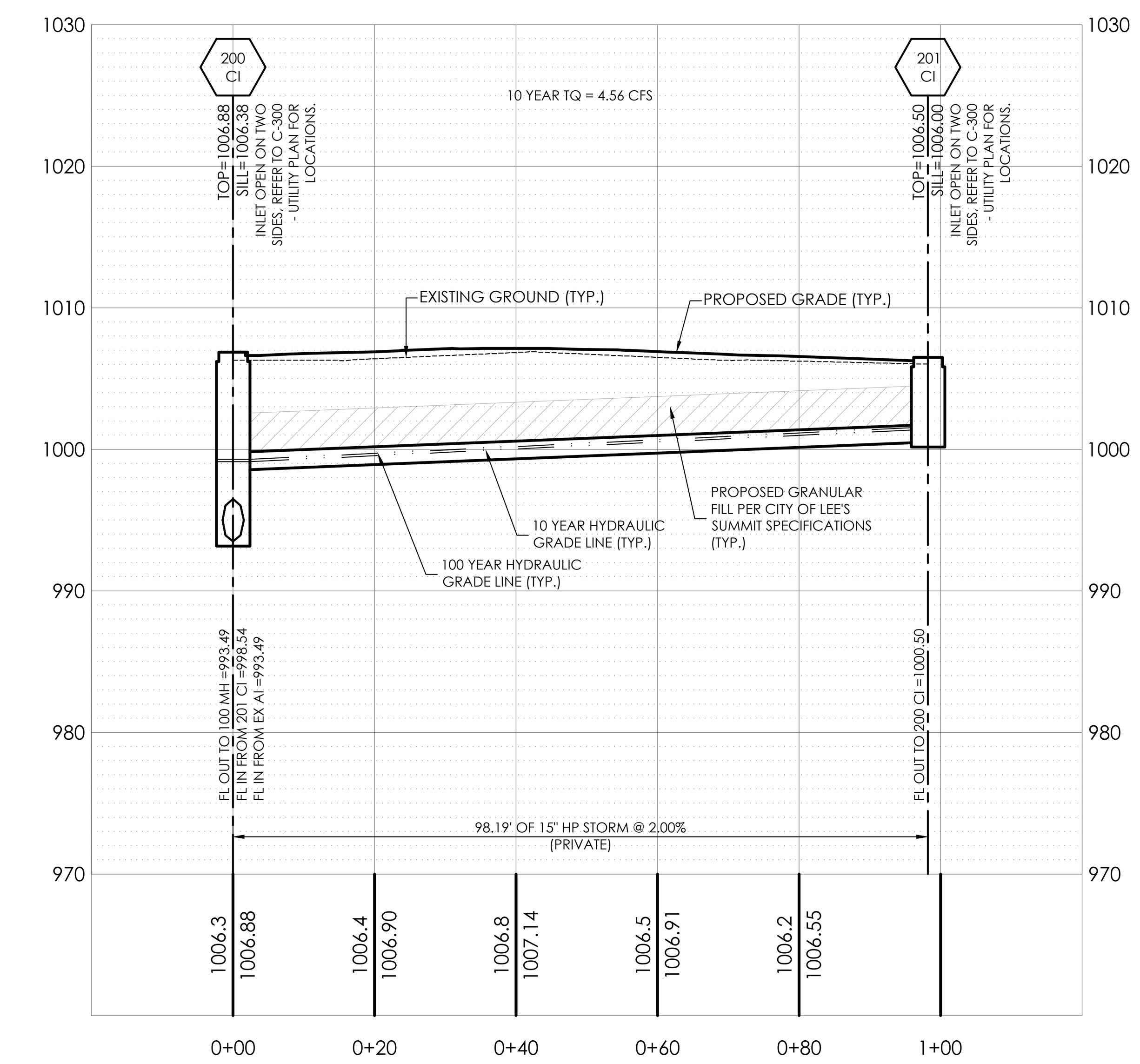

STORM SEWER PROFILE
201 CI TO 200 CI

1"=20' HORIZONTAL
1"=10' VERTICAL

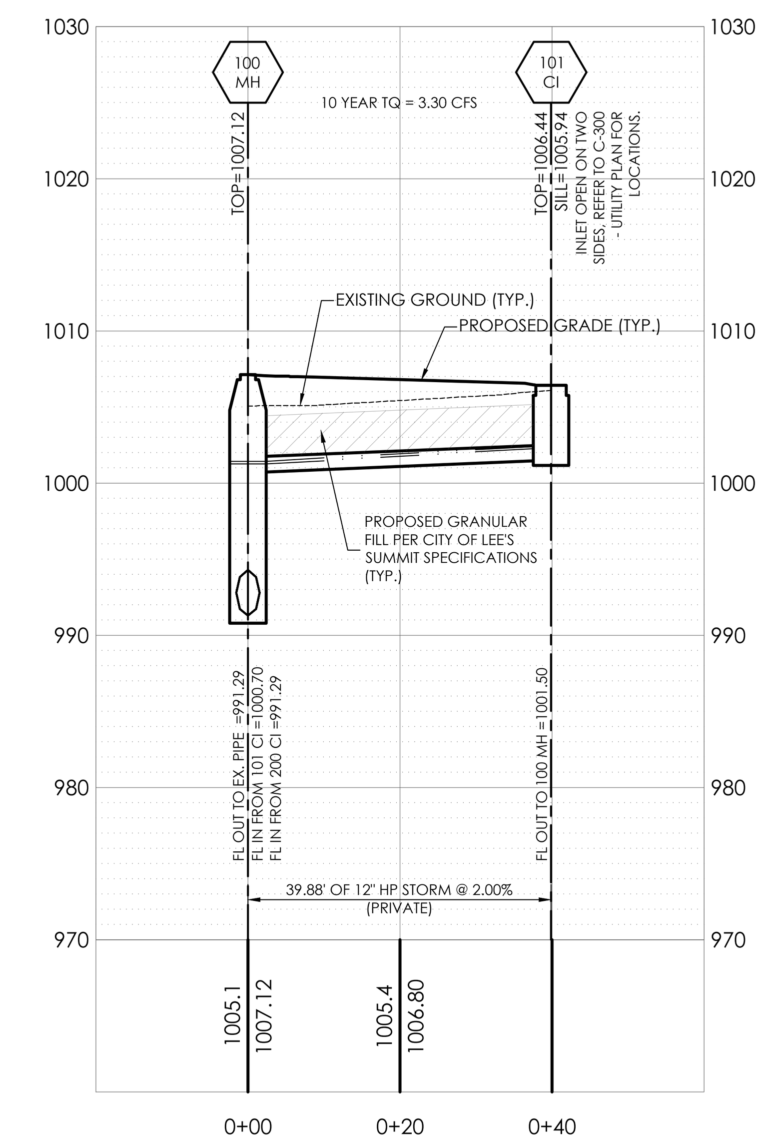

STORM SEWER PROFILE
101 MH TO 100 CI

1"=20' HORIZONTAL
1"=10' VERTICAL

10 YEAR STORM HYDRAULICS

LineNo.	LineID	InletID	LineLength	LineSize	InvertUp	InvertDn	LineSlope	Grnd/RimElev Up	Grnd/RimElev Dn	DepthUp	HGLUp	HGLDn	Rim-Hw	Defl.Angle	VelDn	VelHd Dn	J-LossCoeff	EnergyLoss	MinorLoss	CapacityFull	KnownQ	FlowRate	CrossSlope, Sx	InletEff	QCaptured	QBypass	QCarryover	BypassDepth
			(ft)	(in)	(ft)	(ft)	(%)	(ft)	(ft)	(ft)	(ft)	(ft)	(ft)	(Deg)	(ft/s)	(ft)		(ft)	(ft)	(cfs)	(cfs)	(cfs)	(ft/ft)	(%)	(cfs)	(cfs)	(cfs)	(ft)
1	101-100	101 CI	39.877	12	1001.5	1000.7	2	1006.44	1007.12	0.78**	1002.28	1001.26	4.16	-87.458	7.28	0.39	1.00 z	0	n/a	5.46	3.3	3.3	0.02	100	3.3	0	0	n/a
2	104-103	104 CI	98.19	15	1000.5	998.54	2	1006.5	1006.88	0.86**	1001.37	999.14	5.14	-87.844	7.89	0.39	1.00 z	0	0.39	9.88	4.56	4.56	0.02	100	4.56	0	0	n/a

100 YEAR STORM HYDRUALICS

LineNo.	LineID	InletID	LineLength	LineSize	InvertUp	InvertDn	LineSlope	Grnd/RimElev Up	Grnd/RimElev Dn	DepthUp	HGLUp	HGLDn	Rim-Hw	Defl.Angle	VelDn	VelHd Dn	J-LossCoeff	EnergyLoss	MinorLoss	CapacityFull	KnownQ	FlowRate	CrossSlope, Sx	InletEff	QCaptured	QBypass	QCarryover	BypassDepth
			(ft)	(in)	(ft)	(ft)	(%)	(ft)	(ft)	(ft)	(ft)	(ft)	(ft)	(Deg)	(ft/s)	(ft)		(ft)	(ft)	(cfs)	(cfs)	(cfs)	(ft/ft)	(%)	(cfs)	(cfs)	(cfs)	(ft)
1	101-100	101 CI	39.877	12	1001.5	1000.7	2	1006.44	1007.12	0.91**	1002.41	1001.45	4.03	-87.458	7.88	0.67	1.00 z	0	n/a	5.46	4.95	4.95	0.02	100	4.95	0	0	n/a
2	104-103	104 CI	98.19	15	1000.5	998.54	2	1006.5	1006.88	1.05**	1001.55	999.3	4.95	-87.844	8.69	0.6	1.00 z	0	n/a	9.88	6.84	6.84	0.02	100	6.84	0	0	n/a

"Little MO" says CALL BEFORE YOU DIG! 1-800-DIG-RITE

UNDERGROUND UTILITIES AND OSHA SAFETY NOTE:

Underground utilities and structures have been plotted from available information and therefore, their location must be considered approximate only. It is the responsibility of the individual contractors to notify the utility companies before actual construction. All O.S.H.A rules and regulations established for the type of construction required by these plans shall be strictly followed (ie. trenching, blasting, etc.)

1" = 20'

20 10 0 20 40

SCALE IN FEET

PREMIER DESIGN GROUP
100 MIDLAND PARK DRIVE
WENTZVILLE, MO 63385
MISSOURI CERTIFICATE OF AUTHORITY #-2010000031

STATE OF MISSOURI
STEVE MARION
NUMBER PE2006007195
PROFESSIONAL ENGINEER

ENGINEERS AUTHENTICATION

The responsibility for professional engineering liability on this project is hereby limited to the set of plans authenticated by the seal, signature, and date hereunder attached. Responsibility is disclaimed for all other engineering plans involved in this project and specifically excludes revisions after this date unless reauthenticated.

STEVEN D. MARION P.E.
PROFESSIONAL ENGINEER
PE 2006007195

Project
DUTCH BROS
LEE'S SUMMIT, MO
500 NW CHIPMAN RD.
LEE'S SUMMIT, MO 64086
TM CROWLEY
501 PENNSYLVANIA PARKWAY SUITE 160
INDIANAPOLIS, IN 46280

Date 9-30-2021

Revision Date Description of Changes

Sheet Title
STORM SEWER PROFILES

Sheet Number
C-500

Project No. 2109720
Drawn By A. JONES
Checked By M. FOGARTY

NOT RELEASED FOR CONSTRUCTION

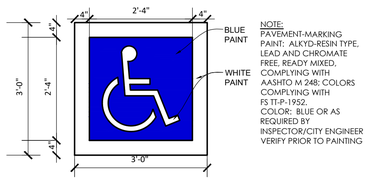

NOTE:
PAVEMENT-MARKING PAINT: ALKYD-RESIN TYPE, LEAD AND CHROMATE FREE, READY MIXED, COMPLYING WITH AASHTO M 248; COLORS COMPLYING WITH FS TT-P-1952. COLOR: BLUE OR AS REQUIRED BY INSPECTOR/CITY ENGINEER VERIFY PRIOR TO PAINTING

17 ACCESSIBLE PARKING SYMBOL

NTS P-2021-DBL-16

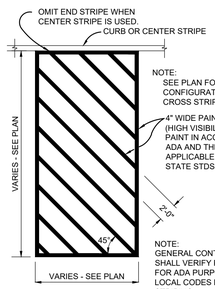

NOTE:
SEE PLAN FOR CONFIGURATION OF CROSS STRIPED AREA

4" WIDE PAINTED STRIPES (HIGH VISIBILITY YELLOW PAINT IN ACCORDANCE WITH ADA AND THE IAC AND OTHER APPLICABLE FEDERAL OR STATE STDS. AND REQMTS.)

NOTE:
GENERAL CONTRACTOR SHALL VERIFY PAINT COLOR FOR ADA PURPOSES WITH LOCAL CODES PRIOR TO STRIPING

STRIPING AND SIGNAGE NOTES:

1. PAVEMENT-MARKING PAINT: ALKYD-RESIN TYPE, LEAD AND CHROMATE FREE, READY MIXED, COMPLYING WITH FS TT-P-115, TYPE I OR AASHTO M 248, TYPE N.
2. NEW ACCESSIBLE STRIPING FOR STALLS AND ACCESS AISLES SHALL BE MARKED USING HIGH VISIBILITY YELLOW PAINT IN ACCORDANCE WITH ADA AND THE IAC AND OTHER APPLICABLE FEDERAL OR STATE STANDARDS AND REQUIREMENTS. STRIPING VENDOR SHALL VERIFY LOCAL CODE.
3. DO NOT APPLY PAVEMENT-MARKING PAINT UNTIL LAYOUT, COLORS, AND PLACEMENT HAVE BEEN VERIFIED WITH REGISTERED DESIGN PROFESSIONAL. A COLOR SAMPLE AND SKETCH IS TO BE PROVIDED TO DESIGN PROFESIONAL.
4. SWEEP AND CLEAN SURFACE TO ELIMINATE LOOSE MATERIAL AND DUST DAILY.
5. APPLY PAINT WITH MECHANICAL EQUIPMENT TO PRODUCE PAVEMENT MARKINGS WITH UNIFORM STRAIGHT EDGES. APPLY AT MANUFACTURER'S RECOMMENDED RATES TO PROVIDE MINIMUM WET FILM THICKNESS OF 15 MILS (0.4 MM).
6. 4" WIDE STRIPES IN ACCESS AISLES SHALL BE 2' ON CENTER.

16 CROSS STRIPING DETAIL

NTS P-2021-DBL-15

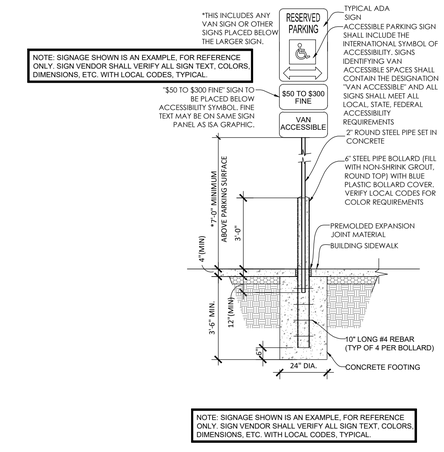

15 ACCESSIBLE PARKING SIGN

NTS P-2021-DBL-14

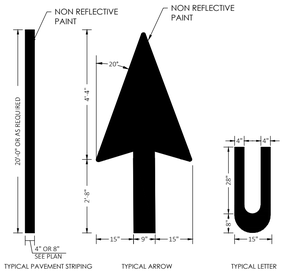

NOTE:
PAINT SHALL BE APPLIED AT A THICKNESS OF 22 WET MILS AND 15 DRY MILS. YELLOW PAINT SHALL BE USED ON CONCRETE PAVEMENT/WHITE PAINT SHALL BE USED ON ASPHALT PAVEMENT

14 TYPICAL PAVEMENT MARKINGS DETAIL

NTS P-2021-DBL-13

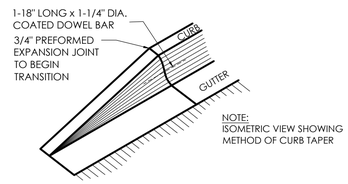

NOTE:
ISOMETRIC VIEW SHOWING METHOD OF CURB TAPER

13 CURB TERMINATION DETAIL

N.T.S. P-2021-DBL-12

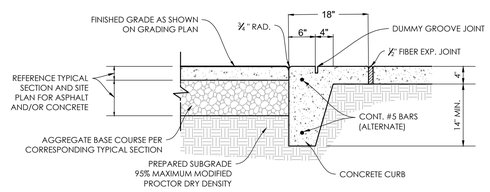

12 FLUSH PAVEMENT AT SIDEWALK DETAIL

N.T.S. P-2021-DBL-11

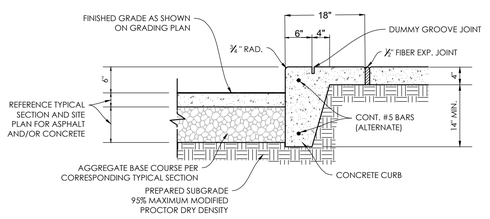

11 6" VERTICAL CONCRETE CURB WITH SIDEWALK DETAIL

N.T.S. P-2021-DBL-10

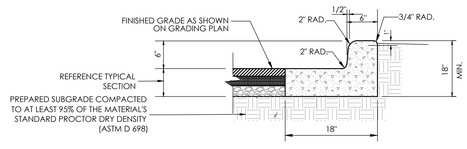

10 CONCRETE CURB AND GUTTER DETAIL

NTS P-2021-DBL-07

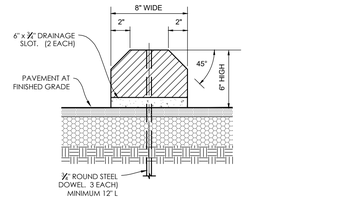

SECTION AA

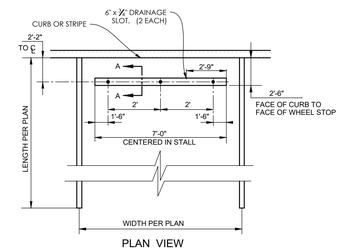

PLAN VIEW

9 PRECAST WHEEL STOP

N.T.S. P-2021-DBL-09

NOTE:

1. STRIPING AND ARRANGEMENT FOR EXAMPLE PURPOSES ONLY. PLEASE REFERENCE SITE PLAN FOR SITE SPECIFIC LAYOUT AND DIMENSIONS.

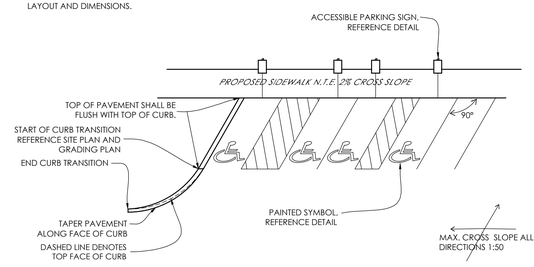

8 CURB TRANSITION DETAIL

N.T.S. P-2021-DBL-08

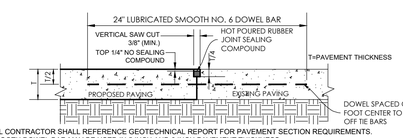

NOTES:

1. GENERAL CONTRACTOR SHALL REFERENCE GEOTECHNICAL REPORT FOR PAVEMENT SECTION REQUIREMENTS.
2. NO. 5 SMOOTH DOWEL BAR MAY BE USED IN 5 INCH AND 6 INCH PAVEMENT THICKNESS.
3. LONGITUDINAL BUTT CONSTRUCTION MAY BE UTILIZED IN PLACE OF LONGITUDINAL HINGED (KEYWAY) JOINT AT CONTRACTORS OPTION.
4. DOWEL BARS SHALL BE DRILLED INTO PAVEMENT HORIZONTALLY BY USE OF MECHANICAL RIG.
5. DRILLING BY HAND IS NOT ACCEPTABLE; PUSHING DOWEL BARS INTO GREEN CONCRETE NOT ACCEPTABLE.

LONGITUDINAL BUTT JOINT
(NOT TO SCALE)

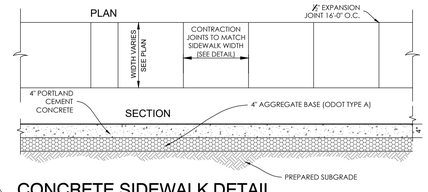

7 CONCRETE SIDEWALK DETAIL

NTS P-2021-DB-08

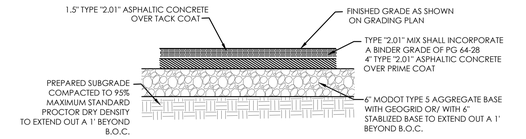

6 ASPHALT PAVEMENT DETAIL (LIGHT DUTY)

N.T.S. P-2021-DBL-06

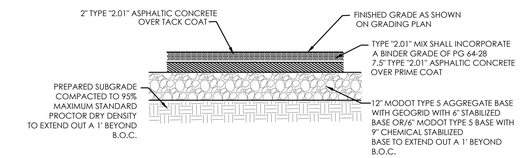

5 ASPHALT PAVEMENT DETAIL (MEDIUM DUTY)

N.T.S. P-2021-DBL-05

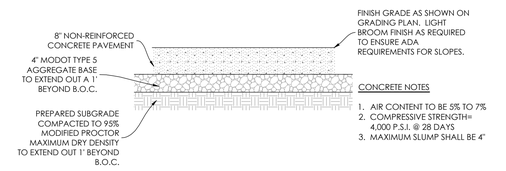

CONCRETE NOTES

1. AIR CONTENT TO BE 5% TO 7%
2. COMPRESSIVE STRENGTH= 4,000 P.S.I. @ 28 DAYS
3. MAXIMUM SLUMP SHALL BE 4"

4 HEAVY DUTY CONCRETE PAVEMENT DETAIL

N.T.S. P-2021-DBL-04

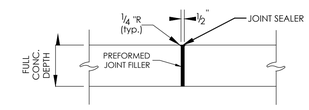

3 EXPANSION JOINT FOR SIDEWALK DETAIL

N.T.S. P-2021-DBL-03

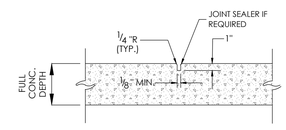

2 CONCRETE PAVEMENT CONSTRUCTION JOINT DETAIL

N.T.S. P-2021-DBL-02

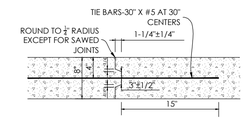

1 KEYWAY FOR CONCRETE PAVEMENT DETAIL

N.T.S. P-2021-DBL-01

PREMIER DESIGN GROUP
100 MIDLAND PARK DRIVE
WENTZVILLE, MO 63385
MISSOURI CERTIFICATE OF AUTHORITY #:2006000031
MISSOURI CERTIFICATE OF AUTHORITY #:2006007849

STATE OF MISSOURI
STEVE MARION
NUMBER PE2006007195
PROFESSIONAL ENGINEER

ENGINEERS AUTHENTICATION
The responsibility for professional engineering liability on this project is hereby limited to the set of plans authenticated by the seal, signature, and date hereunder attached. Responsibility is disclaimed for all other engineering plans relative to this project and specifically excludes revisions after this date, unless authenticated.
STEVEN D. MARION P.E.
PROFESSIONAL ENGINEER
PE 2006007195

Project
DUTCH BROS
LEE'S SUMMIT, MO
500 NW CHIPMAN RD.
LEE'S SUMMIT, MO 64086
TM CROWLEY
501 PENNSYLVANIA PARKWAY SUITE 160
INDIANAPOLIS, IN 46280

Date 9-30-2021

#	Revision Date	Description of Changes

Sheet Title
CONSTRUCTION DETAILS

Sheet Number
C-600

Project No.	2109720
Drawn By	A. JONES
Checked By	M. FOGARTY

NOT RELEASED FOR CONSTRUCTION

\\Vault-pc\vault\CIVIL 3D PROJECTS\20210121\2109720_TMC_Dutch_Lee Summit\ENGINEERING\CONSTRUCTION DRAWINGS\SHEETS\C-700 CONSTRUCTION DETAILS.dwg

ADA RAMP 1

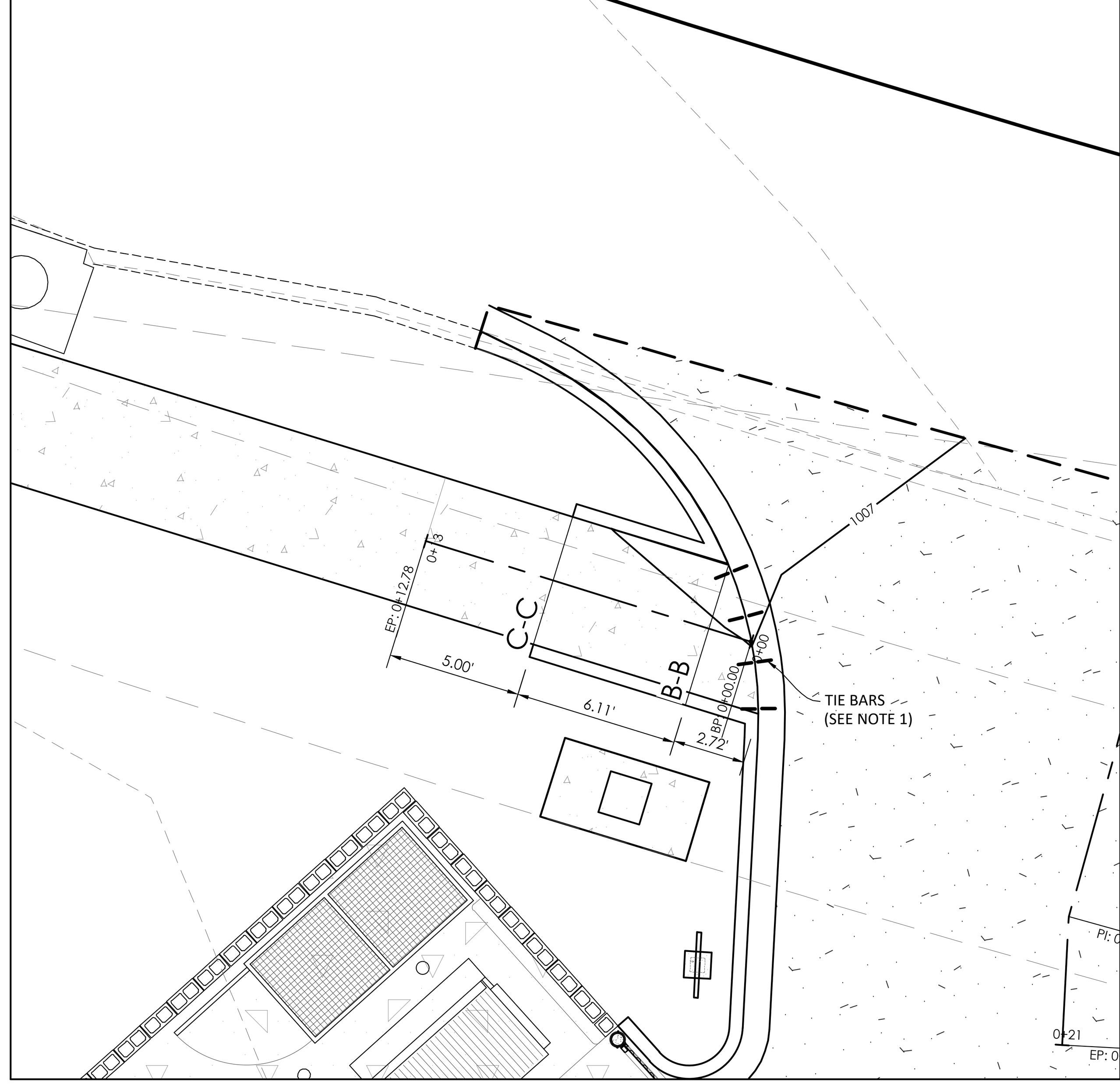

ADA RAMP 2

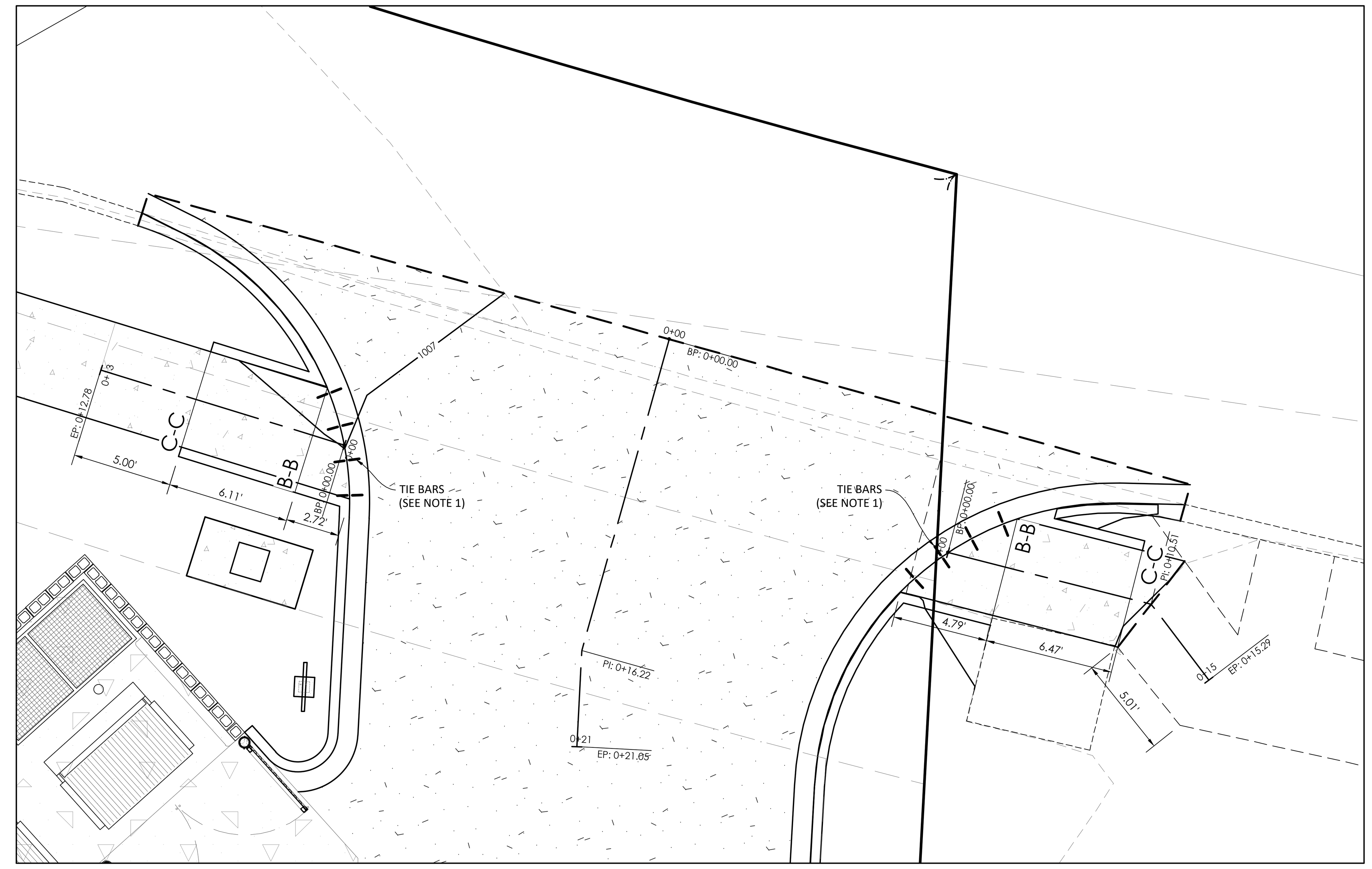

SECTION A-A

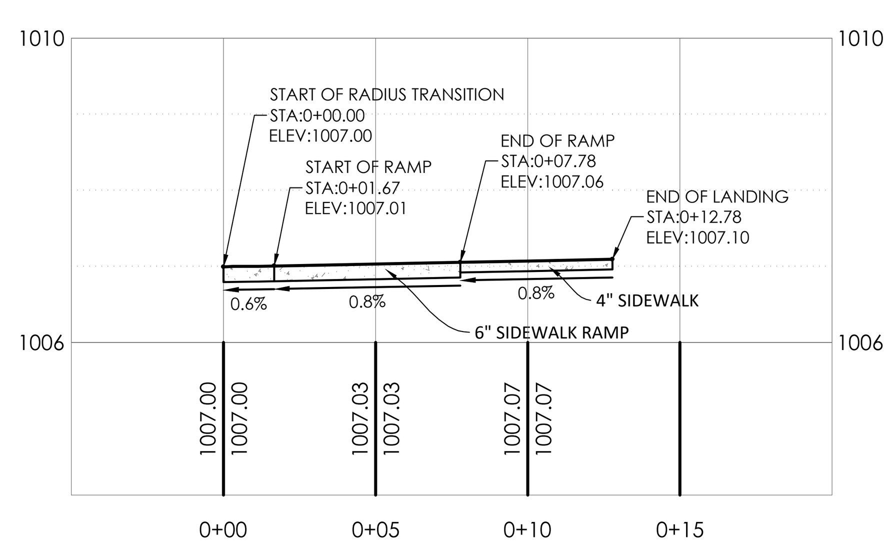

SECTION A-A

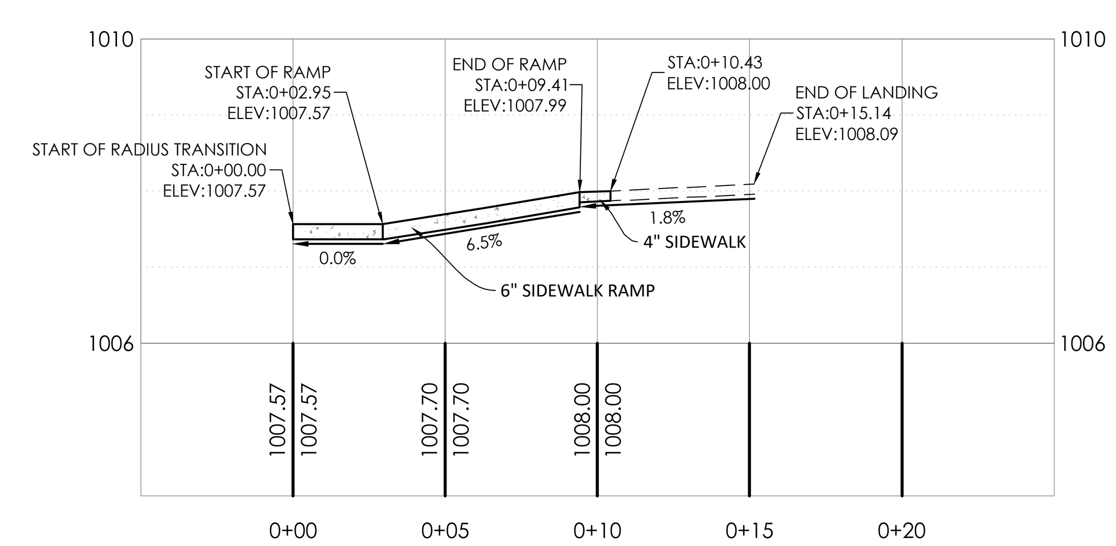

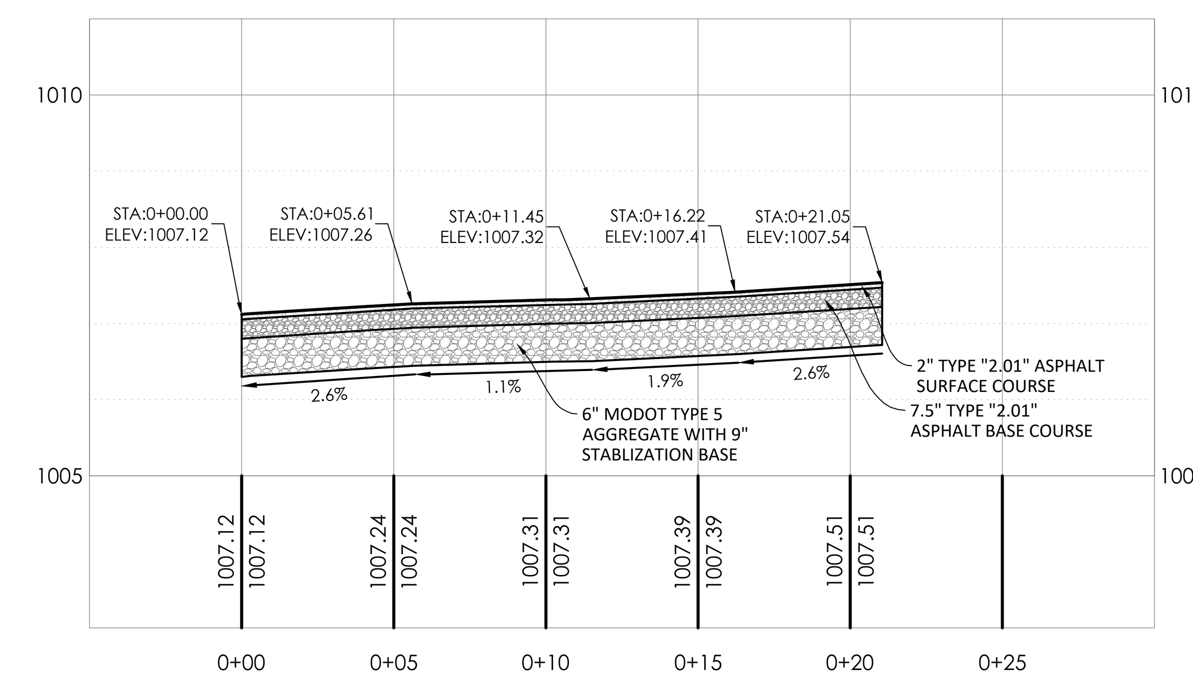

SECTION B-B

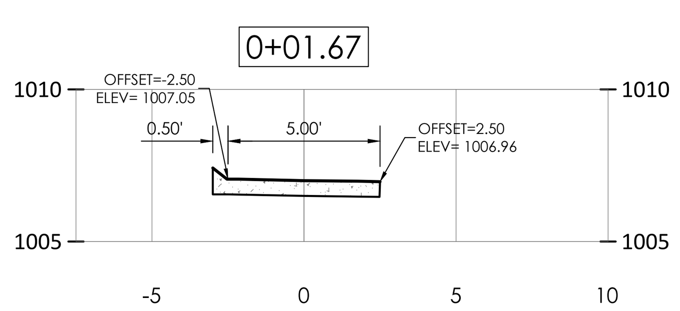

SECTION B-B

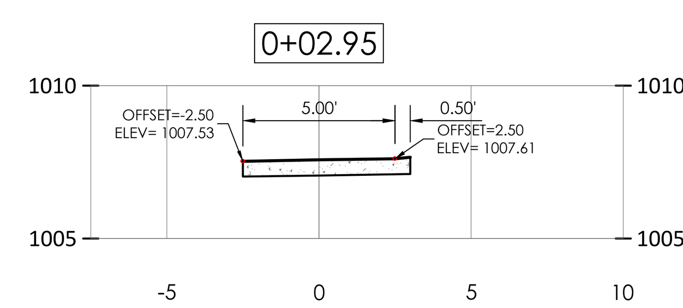

SIDEWALK/SHARED-USE PATH & SIDEWALK/SHARED-USE RAMP NOTES:

1. USE 18" LONG #4 EPOXY COATED TIE BARS @ 24" O.C. EMBED TIE BARS 9" IN EACH DIRECTION
2. ADA MAXIMUM RAMP SLOPE = 8.33%
3. ADA MAXIMUM CROSS SLOPE = 2.0%

SECTION C-C

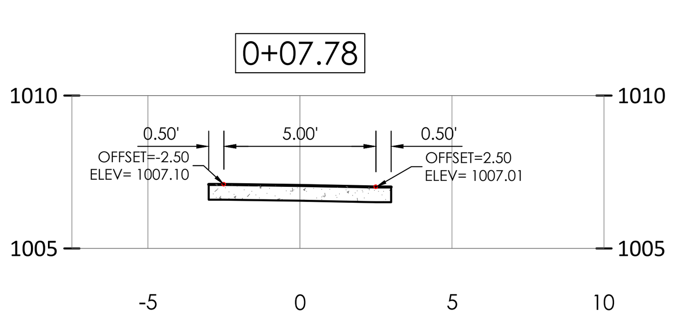

SECTION C-C

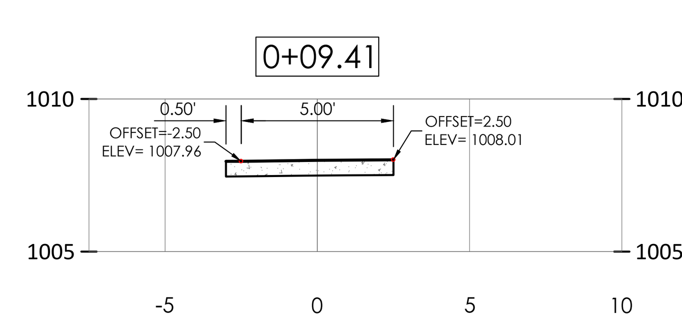

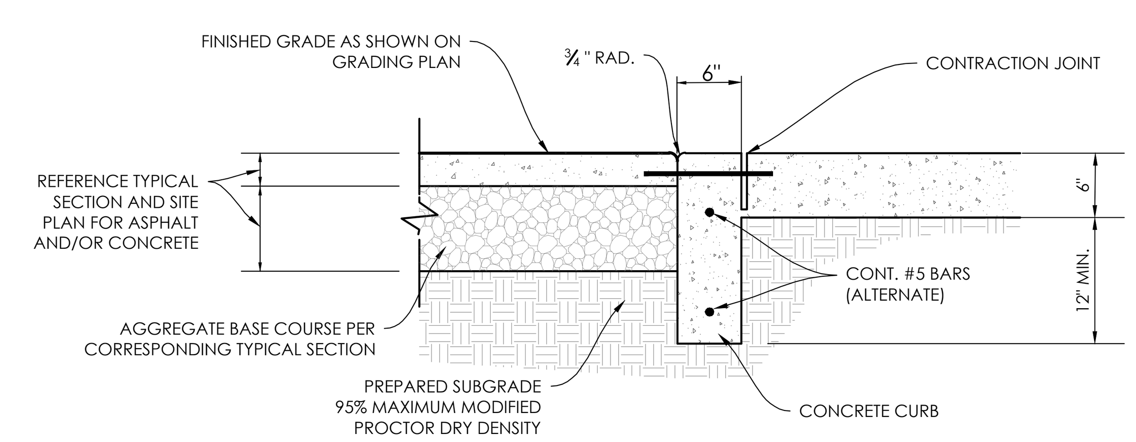

FLUSH PAVEMENT AT SIDEWALK RAMP

N.T.S.

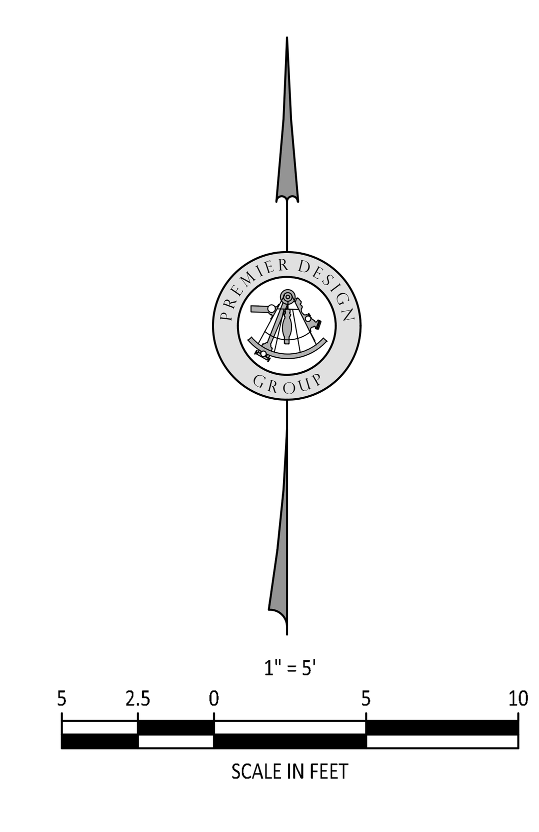

"Little MO" says
CALL BEFORE YOU DIG!
1-800-DIG-RITE

UNDERGROUND UTILITIES AND OSHA SAFETY NOTE:

Underground utilities and structures have been plotted from available information and therefore, their location must be considered approximate only. It is the responsibility of the individual contractors to notify the utility companies before actual construction. All O.S.H.A rules and regulations established for the type of construction required by these plans shall be strictly followed (ie. trenching, blasting, etc.)

PREMIER DESIGN GROUP
100 MIDLAND PARK DRIVE
WENTZVILLE, MO 63385
MISSOURI CERTIFICATE OF AUTHORITY #E-2010000031
MISSOURI CERTIFICATE OF AUTHORITY #LS-2020007819

STATE OF MISSOURI
STEVE MARION
NUMBER PE2006007195
PROFESSIONAL ENGINEER

ENGINEERS AUTHENTICATION

The responsibility for professional engineering liability on this project is hereby limited to the set of plans authenticated by the seal, signature, and date hereunder attached. Responsibility is disclaimed for all other engineering plans involved in this project and specifically excludes revisions after this date unless reauthenticated.

STEVEN D. MARION P.E.
PROFESSIONAL ENGINEER
PE 2006007195

Project
DUTCH BROS
LEE'S SUMMIT, MO
500 NW CHIPMAN RD.
LEE'S SUMMIT, MO 64086
TIM CROWLEY
501 PENNSYLVANIA PARKWAY SUITE 160
INDIANAPOLIS, IN 46280

Date: 9-30-2021

#	Revision Date	Description of Changes

Sheet Title: CONSTRUCTION DETAILS

Sheet Number: C-601

Project No.	2109720
Drawn By	A. JONES
Checked By	M. FOGARTY

NOT RELEASED FOR CONSTRUCTION

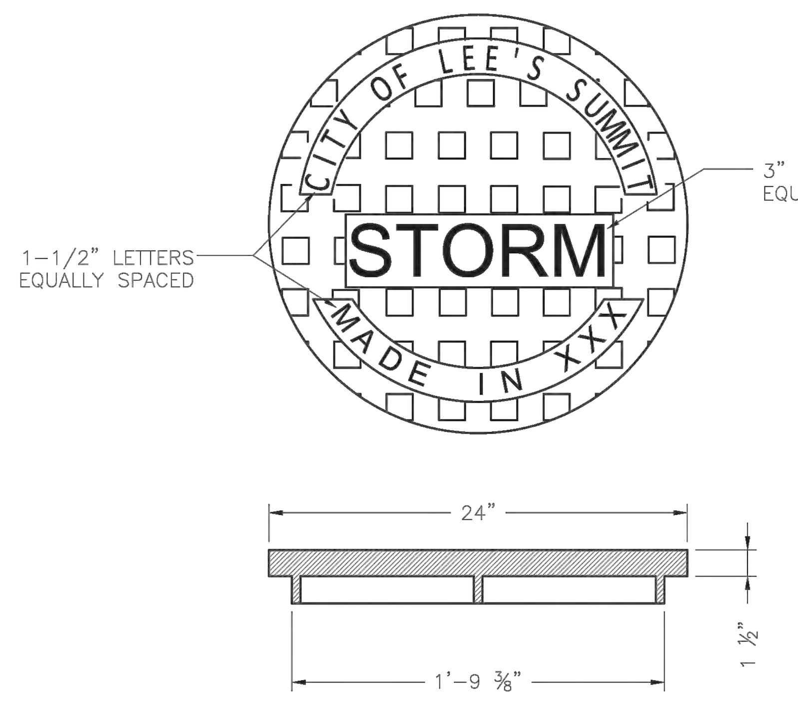

STANDARD 24" MANHOLE COVER
MINIMUM WEIGHT = 160 LB
NOTE: PICK HOLES NOT SHOWN

*COVER AND FRAME MODEL INFORMATION REFER TO THE STORMWATER APPROVED PRODUCT LIST.

LEE'S SUMMIT MISSOURI
PUBLIC WORKS ENGINEERING DIVISION | 220 SE GREEN STREET | LEE'S SUMMIT, MO 64063
STORM MANHOLE COVER DETAIL
Date: 05/2021 | Drawn By: MJF | Checked By: DL
STM-6

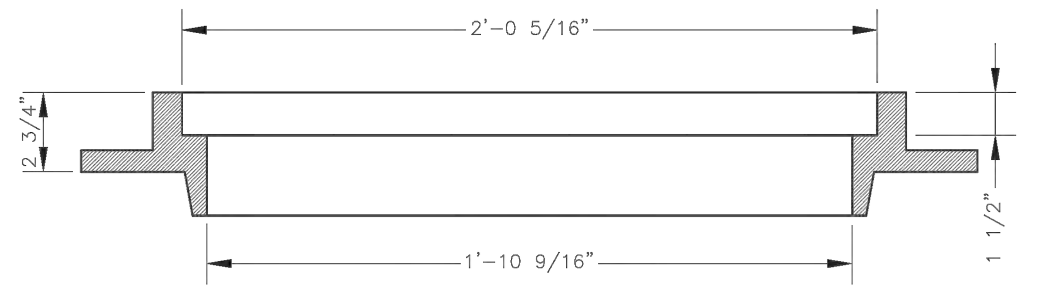

SLAB MANHOLE FRAME
LEE'S SUMMIT PART NO.: LS103A
MINIMUM WEIGHT = 145 LB

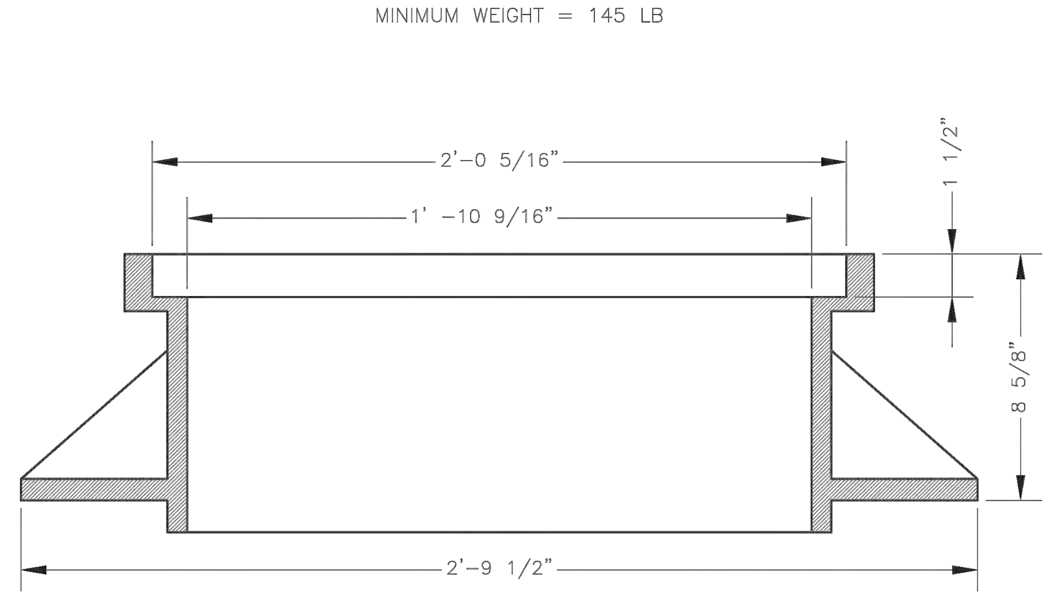

STANDARD 24" MANHOLE FRAME
LEE'S SUMMIT PART NO.: LS101A
MINIMUM WEIGHT = 250 LB

*COVER AND FRAME MODEL INFORMATION REFER TO THE STORMWATER APPROVED PRODUCTS LIST.

LEE'S SUMMIT MISSOURI
PUBLIC WORKS ENGINEERING DIVISION | 220 SE GREEN STREET | LEE'S SUMMIT, MO 64063
STORM MANHOLE FRAME DETAIL
Date: 05/2021 | Drawn By: MJF | Checked By: DL
DWG-7

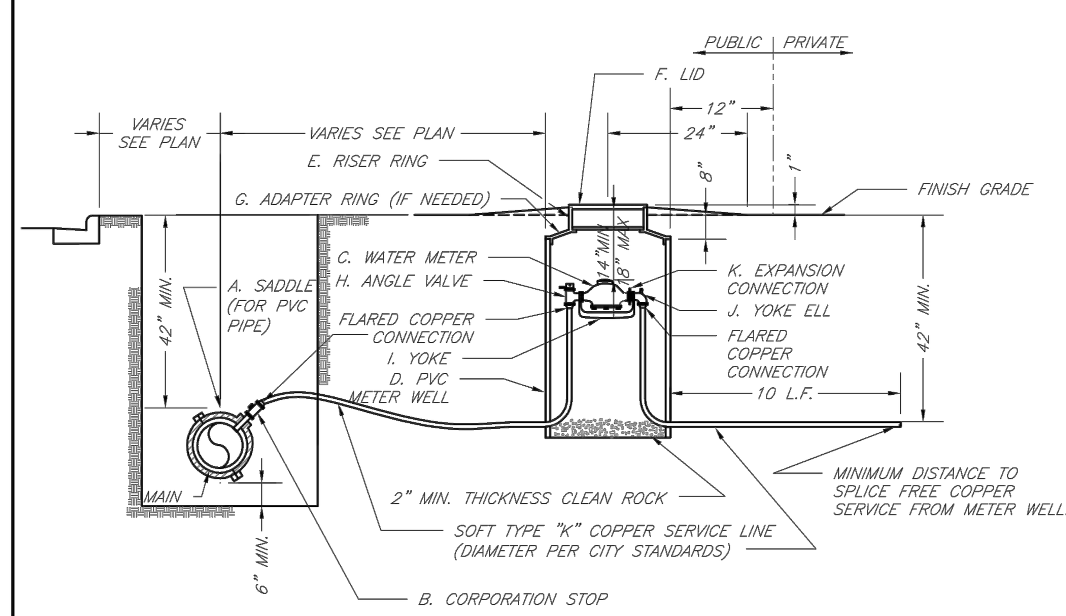

TYPICAL METER INSTALLATION – 2" AND SMALLER
NOT TO SCALE

NOTES:

1. METER INSTALLATION SHALL NOT BE LOCATED IN AREAS SUBJECT TO VEHICULAR TRAFFIC OR IN CONCRETE PAVEMENT WITHOUT CITY APPROVAL.
2. IF METER IS TO BE LOCATED OTHER THAN IN FRONT OF PROPERTY LINE, CITY APPROVAL SHALL BE OBTAINED.
3. CITY TO FURNISH ITEMS A–K.
4. NO OTHER EQUIPMENT SHALL BE INSTALLED IN THIS PIT.
5. 42" MINIMUM BURY DEPTH FOR ALL SERVICE LINES.
6. EXCAVATION FOR TAP TO EXPOSE 4 LINEAR FEET OF MAIN.
7. NO SPLICES ALLOWED BETWEEN METER AND MAIN.
8. SERVICE CONNECTION TAP AT APPROXIMATELY 45 DEGREES.
9. LID AND RISER RING SHALL BE SET SO THAT GROUND WATER WILL DRAIN AWAY FROM THE WELL.
10. CONTACT WATER UTILITIES, 816–969–1900, FOR REQUIREMENTS OF A METER LARGER THAN 2"

LEE'S SUMMIT MISSOURI
PUBLIC WORKS ENGINEERING DIVISION | 220 SE GREEN STREET | LEE'S SUMMIT, MO 64063
SERVICE CONNECTION/METER WELL
Date: 02/13 | Drawn By: JN | Checked By: DL | FILE: WAT–11 | Rev: 1/14 | Rev:

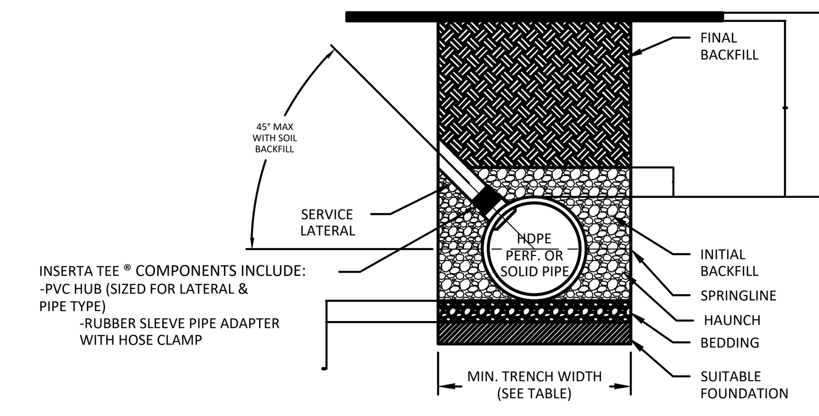

NOTES:

1. ALL PIPE SYSTEMS SHALL BE INSTALLED IN ACCORDANCE WITH ASTM D2321, "STANDARD PRACTICE FOR UNDERGROUND INSTALLATION OF THERMOPLASTIC PIPE FOR SEWERS AND OTHER GRAVITY FLOW APPLICATIONS", LATEST ADDITION
2. MEASURES SHOULD BE TAKEN TO PREVENT MIGRATION OF NATIVE FINES INTO BACKFILL MATERIAL, WHEN REQUIRED.
3. THE INSERTA TEE® CONNECTION SHOULD NOT BE PLACED AT AN ANGLE EXCEEDING 45° FROM THE SPRINGLINE. GREATER ANGLES ARE SUBJECT TO DESIGN ENGINEER APPROVAL AND MAY REQUIRE PREMIUM BACKFILL.
4. FOUNDATION: WHERE THE TRENCH BOTTOM IS UNSTABLE, THE CONTRACTOR SHALL EXCAVATE TO A DEPTH REQUIRED BY THE ENGINEER AND REPLACE WITH SUITABLE MATERIAL AS SPECIFIED BY THE ENGINEER. AS AN ALTERNATIVE AND AT THE DISCRETION OF THE DESIGN ENGINEER, THE TRENCH BOTTOM MAY BE STABILIZED USING A GEOTEXTILE MATERIAL.
5. BEDDING: SUITABLE MATERIAL SHALL BE CLASS I, II OR III. THE CONTRACTOR SHALL PROVIDE DOCUMENTATION FOR MATERIAL SPECIFICATION TO ENGINEER. UNLESS OTHERWISE NOTED BY THE ENGINEER, MINIMUM BEDDING THICKNESS SHALL BE 4" (100mm) FOR 4"-24" (100mm-600mm); 6" (150mm) FOR 30"-60" (750mm-1500mm).
6. INITIAL BACKFILL: SUITABLE MATERIAL SHALL BE CLASS I, II OR III IN THE PIPE ZONE EXTENDING NOT LESS THAN 6" ABOVE CROWN OF PIPE. THE CONTRACTOR SHALL PROVIDE DOCUMENTATION FOR MATERIAL SPECIFICATION TO ENGINEER. MATERIAL SHALL BE INSTALLED AS REQUIRED IN ASTM D2321, LATEST EDITION.
7. MINIMUM COVER: MINIMUM COVER, H, IN NON-TRAFFIC APPLICATIONS (GRASS OR LANDSCAPE AREAS) IS 12" FROM THE TOP OF PIPE TO GROUND SURFACE. ADDITIONAL COVER MAY BE REQUIRED TO PREVENT FLOTATION. FOR TRAFFIC APPLICATIONS, MINIMUM COVER, H, IS 12" UP TO 48" DIAMETER PIPE AND 24" OF COVER FOR 54"-60" DIAMETER PIPE, MEASURED FROM TOP OF PIPE TO BOTTOM OF FLEXIBLE PAVEMENT OR TO TOP OF RIGID PAVEMENT.

RECOMMENDED MINIMUM TRENCH WIDTHS

PIPE DIAM.	MIN. TRENCH WIDTH
4" (100mm)	21" (533mm)
6" (150mm)	23" (584mm)
8" (200mm)	26" (660mm)
10" (250mm)	28" (711mm)
12" (300mm)	30" (762mm)
15" (375mm)	34" (864mm)
18" (450mm)	39" (991mm)
24" (600mm)	48" (1219mm)
30" (750mm)	56" (1422mm)
36" (900mm)	64" (1626mm)
42" (1050mm)	72" (1829mm)
48" (1200mm)	80" (2032mm)
54" (1350mm)	88" (2235mm)
60" (1500mm)	96" (2438mm)

REV.	DESCRIPTION	BY	MM/DD/YY	CHK'D
2	REV. DRAWING NAME OR NUMBER	TJR	01/28/16	

© 2016 ADS, INC.

ADVANCED DRAINAGE SYSTEMS, INC. ("ADS") HAS PREPARED THIS DETAIL BASED ON INFORMATION PROVIDED TO ADS. THIS DRAWING IS INTENDED TO DEPICT THE COMPONENTS AS REQUESTED. ADS HAS NOT PERFORMED ANY ENGINEERING OR DESIGN SERVICES FOR THIS PROJECT, NOR HAS ADS INDEPENDENTLY VERIFIED THE INFORMATION SUPPLIED. THE INSTALLATION DETAILS PROVIDED HEREIN ARE GENERAL RECOMMENDATIONS AND ARE NOT SPECIFIC FOR THIS PROJECT. THE DESIGN ENGINEER SHALL REVIEW THESE DETAILS PRIOR TO CONSTRUCTION. IT IS THE DESIGN ENGINEERS RESPONSIBILITY TO ENSURE THE DETAILS PROVIDED HEREIN MEETS OR EXCEEDS THE APPLICABLE NATIONAL, STATE, OR LOCAL REQUIREMENTS AND TO ENSURE THAT THE DETAILS PROVIDED HEREIN ARE ACCEPTABLE FOR THIS PROJECT.

INSERTA TEE DETAIL (HDPE)
DRAWING NUMBER: STD–101I
ADS ADVANCED DRAINAGE SYSTEMS, INC. 4640 TRUEMAN BLVD HILLIARD, OHIO 43026
JLE | 11/5/10 | NTS | 1 OF 1

HP STORM TRENCH INSTALLATION DETAIL

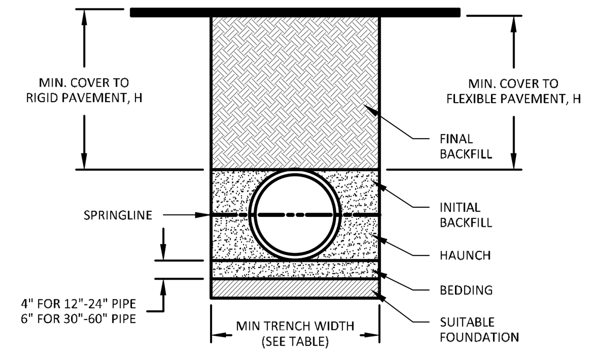

NOTES:

1. ALL PIPE SYSTEMS SHALL BE INSTALLED IN ACCORDANCE WITH ASTM D2321, "STANDARD PRACTICE FOR UNDERGROUND INSTALLATION OF THERMOPLASTIC PIPE FOR SEWERS AND OTHER GRAVITY FLOW APPLICATIONS", LATEST ADDITION. WITH THE EXCEPTION THAT THE INITIAL BACKFILL MAY EXTEND TO THE CROWN OF THE PIPE. SOIL CLASSIFICATIONS ARE PER THE LATEST VERSION OF ASTM D2321. CLASS IVB MATERIALS (MH, CH) AS DEFINED IN PREVIOUS VERSIONS OF ASTM D2321 ARE NOT APPROPRIATE BACKFILL MATERIALS.
2. MEASURES SHOULD BE TAKEN TO PREVENT MIGRATION OF NATIVE FINES INTO BACKFILL MATERIAL, WHEN REQUIRED.
3. FOUNDATION: WHERE THE TRENCH BOTTOM IS UNSTABLE, THE CONTRACTOR SHALL EXCAVATE TO A DEPTH REQUIRED BY THE ENGINEER AND REPLACE WITH SUITABLE MATERIAL AS SPECIFIED BY THE ENGINEER. AS AN ALTERNATIVE AND AT THE DISCRETION OF THE DESIGN ENGINEER, THE TRENCH BOTTOM MAY BE STABILIZED USING A GEOTEXTILE MATERIAL.
4. BEDDING: SUITABLE MATERIAL SHALL BE CLASS I, II, III, OR IV. THE CONTRACTOR SHALL PROVIDE DOCUMENTATION FOR MATERIAL SPECIFICATION TO ENGINEER. COMPACTION SHALL BE SPECIFIED BY THE ENGINEER IN ACCORDANCE WITH TABLE 3 FOR THE APPLICABLE FILL HEIGHTS LISTED. UNLESS OTHERWISE NOTED BY THE ENGINEER, MINIMUM BEDDING THICKNESS SHALL BE 4" (100mm) FOR 12"-24" (300mm-600mm) DIAMETER PIPE; 6" (150mm) FOR 30"-60" (750mm-1500mm) DIAMETER PIPE. THE MIDDLE 1/3 BENEATH THE PIPE INVERT SHALL BE LOOSELY PLACED. PLEASE NOTE, CLASS IV MATERIAL HAS LIMITED APPLICATION AND CAN BE DIFFICULT TO PLACE AND COMPACT; USE ONLY WITH THE APPROVAL OF A SOIL EXPERT.
5. INITIAL BACKFILL: SUITABLE MATERIAL SHALL BE CLASS I, II, III, OR IV IN THE PIPE ZONE EXTENDING TO THE CROWN OF THE PIPE. THE CONTRACTOR SHALL PROVIDE DOCUMENTATION FOR MATERIAL SPECIFICATION TO ENGINEER. MATERIAL SHALL BE INSTALLED AS REQUIRED IN ASTM D2321, LATEST EDITION. COMPACTION SHALL BE SPECIFIED BY THE ENGINEER IN ACCORDANCE WITH TABLE 3 FOR THE APPLICABLE FILL HEIGHTS LISTED. PLEASE NOTE, CLASS IV MATERIAL HAS LIMITED APPLICATION AND CAN BE DIFFICULT TO PLACE AND COMPACT; USE ONLY WITH THE APPROVAL OF A SOIL EXPERT.
6. MINIMUM COVER: MINIMUM COVER, H, IN NON-TRAFFIC APPLICATIONS (GRASS OR LANDSCAPE AREAS) IS 12" (300mm) FROM THE TOP OF PIPE TO GROUND SURFACE. ADDITIONAL COVER MAY BE REQUIRED TO PREVENT FLOTATION. FOR TRAFFIC APPLICATIONS; CLASS I OR II MATERIAL COMPACTED TO 90% SPD AND CLASS III COMPACTED TO 95% SPD IS REQUIRED. FOR TRAFFIC APPLICATIONS, MINIMUM COVER, H, IS 12" (300mm) UP TO 48" (1200mm) DIAMETER PIPE AND 24" (600mm) OF COVER FOR 60" (1500mm) DIAMETER PIPE, MEASURED FROM TOP OF PIPE TO BOTTOM OF FLEXIBLE PAVEMENT OR TO TOP OF RIGID PAVEMENT.
7. FOR ADDITIONAL INFORMATION SEE TECHNICAL NOTE 2.04.

TABLE 1, RECOMMENDED MINIMUM TRENCH WIDTHS

PIPE DIAM.	MIN. TRENCH WIDTH
12" (300mm)	30" (762mm)
15" (375mm)	34" (864mm)
18" (450mm)	39" (991mm)
24" (600mm)	48" (1219mm)
30" (750mm)	56" (1422mm)
36" (900mm)	64" (1626mm)
42" (1050mm)	72" (1829mm)
48" (1200mm)	80" (2032mm)
60" (1500mm)	96" (2438mm)

TABLE 2, MINIMUM RECOMMENDED COVER BASED ON VEHICLE LOADING CONDITIONS

PIPE DIAM.	SURFACE LIVE LOADING CONDITION	
	H-25	HEAVY CONSTRUCTION (75T AXLE LOAD) *
12" - 48" (300mm - 1200mm)	12" (305mm)	48" (1219mm)
60" (1500mm)	24" (610mm)	60" (1524mm)

* VEHICLES IN EXCESS OF 75T MAY REQUIRE ADDITIONAL COVER

TABLE 3, MAXIMUM COVER FOR ADS HP STORM PIPE, ft

PIPE DIA	CLASS I COMPACTED	CLASS II 95%	CLASS II 90%	CLASS II 85%	CLASS III 95%	CLASS III 90%	CLASS IV 95%
12" (300mm)	41 (12.5m)	28 (8.5m)	21 (6.4m)	16 (4.9m)	20 (6.1m)	16 (4.9m)	16 (4.9m)
15" (375mm)	42 (12.8m)	29 (8.8m)	21 (6.4m)	16 (4.9m)	21 (6.4m)	16 (4.9m)	16 (4.9m)
18" (450mm)	44 (13.4m)	30 (9.1m)	21 (6.4m)	16 (4.9m)	22 (6.7m)	17 (5.2m)	16 (4.9m)
24" (600mm)	37 (11.3m)	26 (7.9m)	18 (5.5m)	14 (4.3m)	19 (5.8m)	14 (4.3m)	14 (4.3m)
30" (750mm)	39 (11.9m)	27 (8.2m)	19 (5.8m)	14 (4.3m)	19 (5.8m)	15 (4.6m)	14 (4.3m)
36" (900mm)	28 (8.5m)	20 (6.1m)	14 (4.3m)	10 (3.0m)	14 (4.3m)	11 (3.4m)	10 (3.0m)
42" (1050mm)	30 (9.1m)	21 (6.4m)	14 (4.3m)	10 (3.0m)	15 (4.6m)	11 (3.4m)	10 (3.0m)
48" (1200mm)	29 (8.8m)	20 (6.1m)	14 (4.3m)	9 (2.7m)	14 (4.3m)	10 (3.0m)	10 (3.0m)
60" (1500mm)	29 (8.8m)	20 (6.1m)	14 (4.3m)	9 (2.7m)	14 (4.3m)	10 (3.0m)	9 (2.7m)

FILL HEIGHT TABLE GENERATED USING AASHTO SECTION 12, LOAD RESISTANCE FACTOR DESIGN (LRFD) PROCEDURE WITH THE FOLLOWING ASSUMPTIONS:
NO HYDROSTATIC PRESSURE
UNIT WEIGHT OF SOIL (γs) = 120 PCF

REV.	DESCRIPTION	BY	MM/DD/YY	CHK'D
6	REV. MAXIMUM COVER HEIGHTS	RWD	01/11/17	

© 2016 ADS, INC.

ADVANCED DRAINAGE SYSTEMS, INC. ("ADS") HAS PREPARED THIS DETAIL BASED ON INFORMATION PROVIDED TO ADS. THIS DRAWING IS INTENDED TO DEPICT THE COMPONENTS AS REQUESTED. ADS HAS NOT PERFORMED ANY ENGINEERING OR DESIGN SERVICES FOR THIS PROJECT, NOR HAS ADS INDEPENDENTLY VERIFIED THE INFORMATION SUPPLIED. THE INSTALLATION DETAILS PROVIDED HEREIN ARE GENERAL RECOMMENDATIONS AND ARE NOT SPECIFIC FOR THIS PROJECT. THE DESIGN ENGINEER SHALL REVIEW THESE DETAILS PRIOR TO CONSTRUCTION. IT IS THE DESIGN ENGINEERS RESPONSIBILITY TO ENSURE THE DETAILS PROVIDED HEREIN MEETS OR EXCEEDS THE APPLICABLE NATIONAL, STATE, OR LOCAL REQUIREMENTS AND TO ENSURE THAT THE DETAILS PROVIDED HEREIN ARE ACCEPTABLE FOR THIS PROJECT.

TRENCH INSTALLATION DETAIL (HP STORM)
DRAWING NUMBER: STD–101D
ADS ADVANCED DRAINAGE SYSTEMS, INC. 4640 TRUEMAN BLVD HILLIARD, OHIO 43026
JAB | 01/29/09 | NTS | 1 OF 1

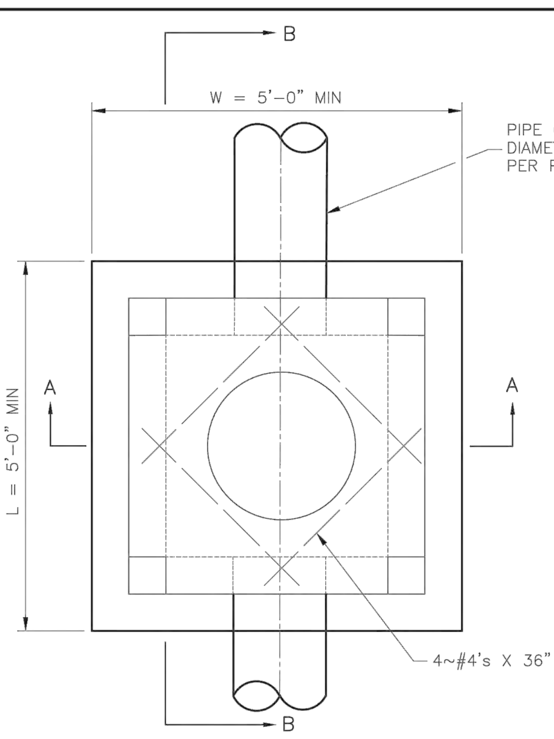

PLAN VIEW

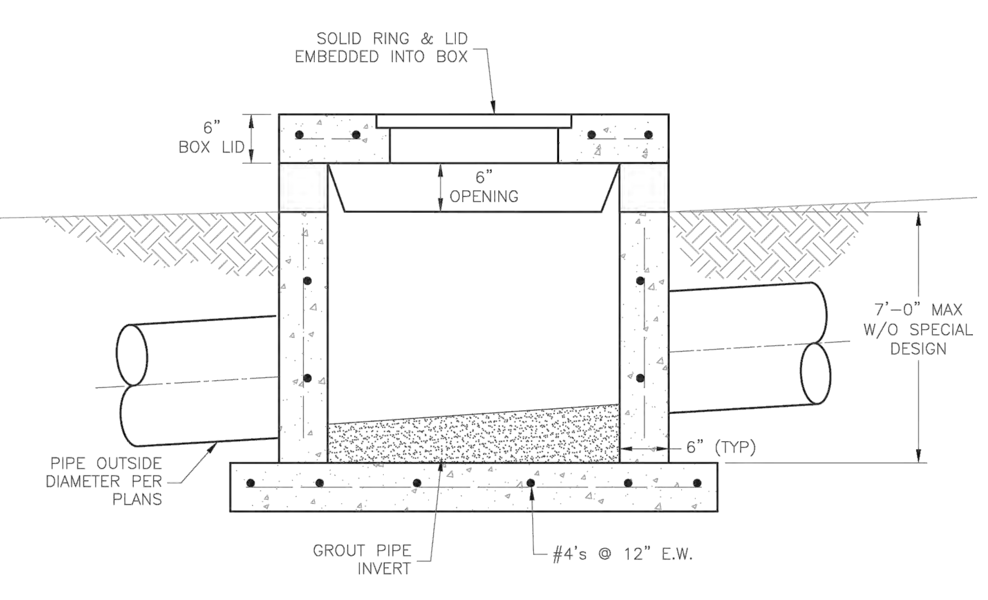

SECTION B–B

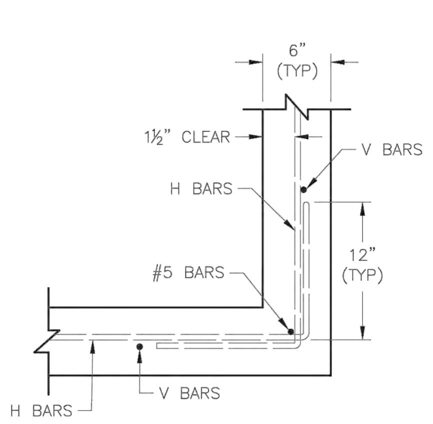

WALL CORNER DETAIL

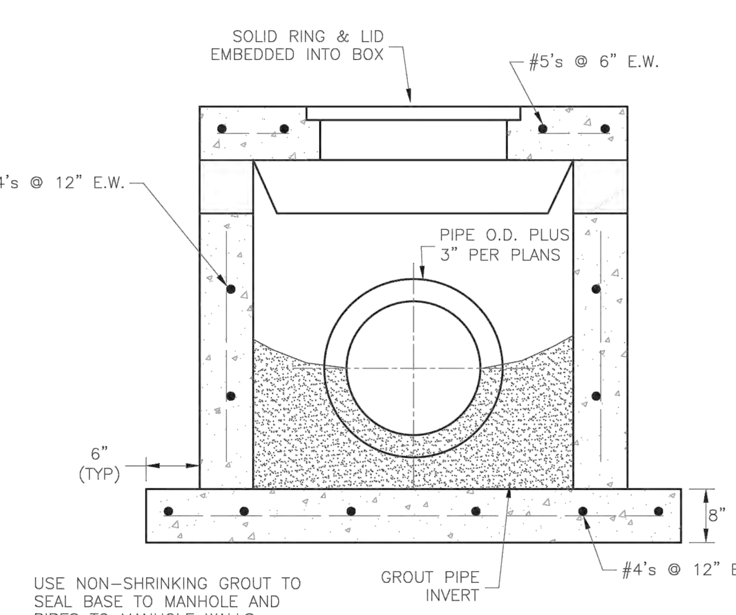

SECTION A–A

GENERAL NOTES:

1. LOCATE RING AND COVER OVER OUTLET ON BLANK WALL.
2. USE ¾" CHAMFER ON ALL EXPOSED CONCRETE CORNERS.
3. FLOOR OF INLET GROUTED AND SHAPED TO MATCH PIPE INVERT TO PROVIDE SMOOTH FLOW.
4. STEPS REQUIRED AT 16" O.C. WHEN DEPTH FROM TOP OF CASTING TO INVERT EXCEEDS 3' ON BLANK WALL IF POSSIBLE.
5. BOXOUTS WILL NOT BE ALLOWED TO PROJECT THROUGH THE CORNERS OF THE STRUCTURE.
6. THE MINIMUM REINFORCING SHALL BE 1 H–BAR OVER A CAST–IN–PLACE PIPE AND 2 H–BARS OVER A PRECAST BOXOUT.
7. SHOW FIELD INLET ORIENTATION ON PLANS PLUS NUMBER AND SIDE OF OPENINGS.
8. PRECAST LIDS SHALL BE PINNED, SEALED WITH NON–SHRINKABLE GROUT AND REMOVABLE FOR FUTURE MAINTENANCE.
9. FOR RING AND COVER SEE THE STORMWATER APPROVED PRODUCT LIST.

LEE'S SUMMIT MISSOURI
PUBLIC WORKS ENGINEERING DIVISION | 220 SE GREEN STREET | LEE'S SUMMIT, MO 64063
Project: STANDARD DETAILS CITY OF LEE'S SUMMIT, MO LEE'S SUMMIT, JACKSON COUNTY, MO
Sheet Name: FIELD INLET DETAIL
Drawn By: MJF | Checked By: DL | Date: 05/2021 | Proj. #:
STM-2

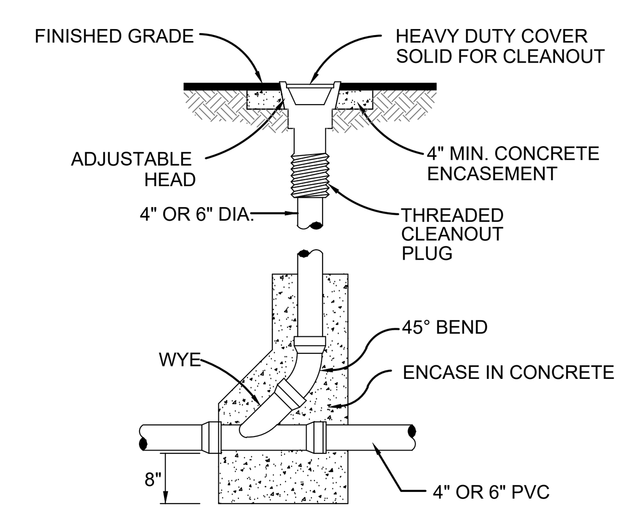

CLEANOUT DETAIL
(NOT TO SCALE)

PREMIER DESIGN GROUP
100 MIDLAND PARK DRIVE
WENTZVILLE, MO 63385
MISSOURI CERTIFICATE OF AUTHORITY #E-2011000031
MISSOURI CERTIFICATE OF AUTHORITY #LS-2012007849
MISSOURI CERTIFICATE OF AUTHORITY #LA-2016007538

STATE OF MISSOURI
STEVE MARION
NUMBER PE2006007195
PROFESSIONAL ENGINEER
10/5/2021

ENGINEERS AUTHENTICATION
The responsibility for professional engineering liability on this project is hereby limited to the set of plans authenticated by the seal, signature, and date hereunder attached. Responsibility is disclaimed for all other engineering plans involved in this project and specifically excludes revisions after this date unless reauthenticated.
STEVEN D. MARION P.E.
PROFESSIONAL ENGINEER
PE 2006007195

Project
DUTCH BROS
LEE'S SUMMIT, MO
500 NW CHIPMAN RD.
LEE'S SUMMIT, MO 64086
TM CROWLEY
501 PENNSYLVANIA PARKWAY SUITE 160
INDIANAPOLIS, IN 46280

Date 9-30-2021

#	Revision Date	Description of Changes

Sheet Title UTILITY DETAILS

Sheet Number C-700

Project No. 2109720
Drawn By A. JONES
Checked By M. FOGARTY

NOT RELEASED FOR CONSTRUCTION

\\Vault-pc\vault\CIVIL 3D PROJECTS\2021\2109720_TMC_Dutch_Lee Summit\ENGINEERING\CONSTRUCTION DRAWINGS\SHEETS\C-801 UTILITY DETAILS.dwg

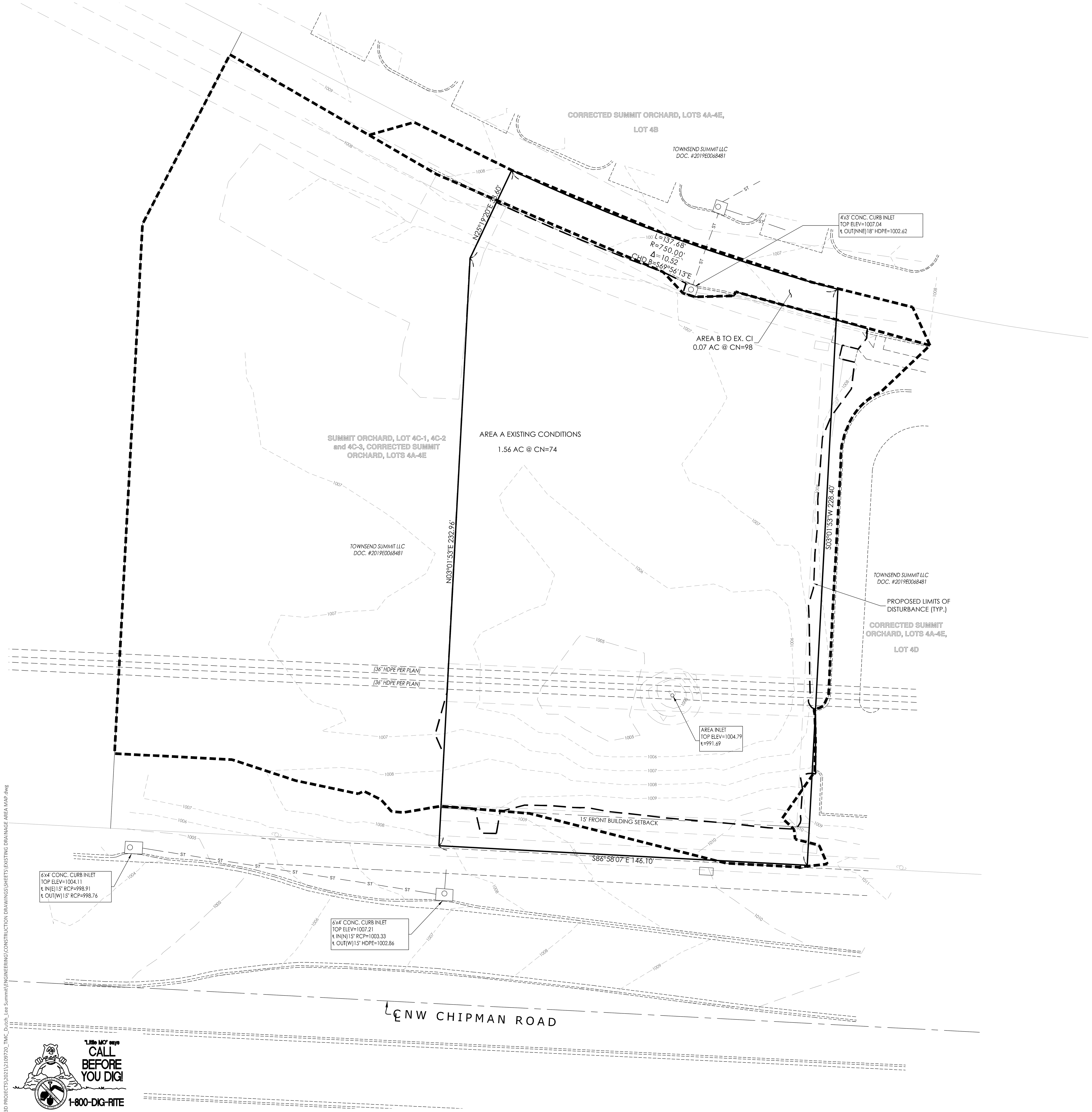

UNDERGROUND UTILITIES AND OSHA SAFETY NOTE:

Underground utilities and structures have been plotted from available information and therefore, their location must be considered approximate only. It is the responsibility of the individual contractors to notify the utility companies before actual construction. All O.S.H.A rules and regulations established for the type of construction required by these plans shall be strictly followed (ie. trenching, blasting, etc.)

\\Vault-pc\vault\CIVIL 3D PROJECTS\2021\2109720_TMC_Dutch_Lee Summit\ENGINEERING\CONSTRUCTION DRAWINGS\SHEETS\EXISTING DRAINAGE AREA MAP.dwg

THIS PLAN IS FOR DRAINAGE PURPOSES AND REFERENCE ONLY. DO NOT USE FOR CONSTRUCTION.

MINIMUM TIME OF CONCENTRATION = 5 MINUTES
EXISTING SOILS TYPE = C
CN PVMT = 98
CN GRASS = 74
CN COMMERCIAL AREAS = 94

MASTER DRAINAGE PLAN NOTES

1. MBOE - (MINIMUM BUILDING OPENING ELEVATION) ELEV = 1008.00
2. THE INDIVIDUAL LOT OWNER(S) SHALL NOT CHANGE OR OBSTRUCT THE OVERALL DRAINAGE FLOW LINES OR PATHS ON THE LOT AS SHOWN ON THE MASTER DRAINAGE PLAN, UNLESS SPECIFIC APPLICATION IS MADE AND APPROVED BY THE CITY ENGINEER.

EXISTING RUNOFF TABLE

ID	EXISTING Q (CFS)
AREA A	
2-Year	3.46
10-Year	7.31
100-Year	12.87
AREA B	
2-Year	0.39
10-Year	0.59
100-Year	0.86

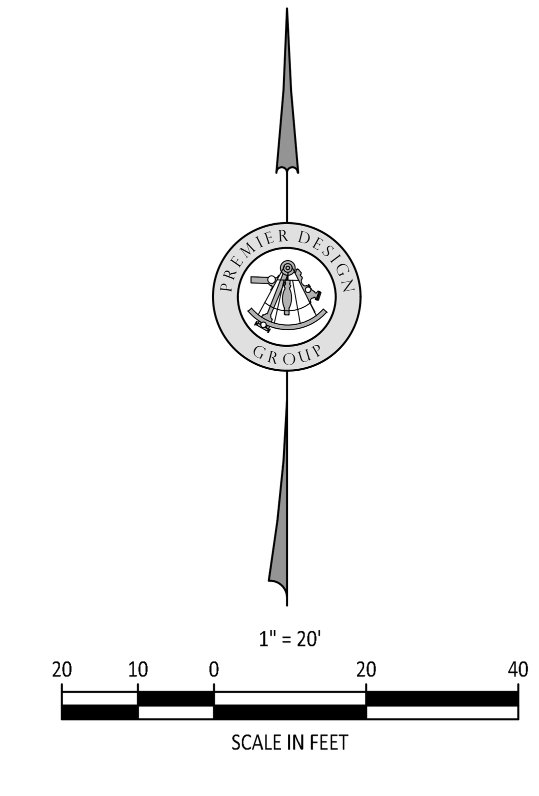

PREMIER DESIGN GROUP
100 MIDLAND PARK DRIVE
WENTZVILLE, MO 63385
MISSOURI CERTIFICATE OF AUTHORITY #E-2011000031
MISSOURI CERTIFICATE OF AUTHORITY #LS-2012007849

STATE OF MISSOURI
STEVE MARION
NUMBER PE2006007195
PROFESSIONAL ENGINEER
10/5/2021

ENGINEERS AUTHENTICATION

The responsibility for professional engineering liability on this project is hereby limited to the set of plans authenticated by the seal, signature, and date hereunder attached. Responsibility is disclaimed for all other engineering plans involved in this project and specifically excludes revisions after this date unless reauthenticated.

STEVEN D. MARION P.E.
PROFESSIONAL ENGINEER
PE 2006007195

Project
DUTCH BROS
LEE'S SUMMIT, MO
500 NW CHIPMAN RD.
LEE'S SUMMIT, MO 64086
TM CROWLEY
501 PENNSYLVANIA PARKWAY SUITE 160
INDIANAPOLIS, IN 46280

Date 9-30-2021

#	Revision Date	Description of Changes

Sheet Title
EXISTING DRAINAGE AREA MAP

Sheet Number
C-500

Project No.	2109720
Drawn By	A. JONES
Checked By	M. FOGARTY

NOT RELEASED FOR CONSTRUCTION

MINIMUM TIME OF CONCENTRATION = 5 MINUTES
EXISTING SOILS TYPE = C
CN PVMT = 98
CN GRASS = 74
CN COMMERCIAL AREAS = 94

MASTER DRAINAGE PLAN NOTES

1. MBOE - (MINIMUM BUILDING OPENING ELEVATION)
   ELEV = 1008.00
2. THE INDIVIDUAL LOT OWNER(S) SHALL NOT CHANGE OR OBSTRUCT THE OVERALL DRAINAGE FLOW LINES OR PATHS ON THE LOT AS SHOWN ON THE MASTER DRAINAGE PLAN, UNLESS SPECIFIC APPLICATION IS MADE AND APPROVED BY THE CITY ENGINEER.

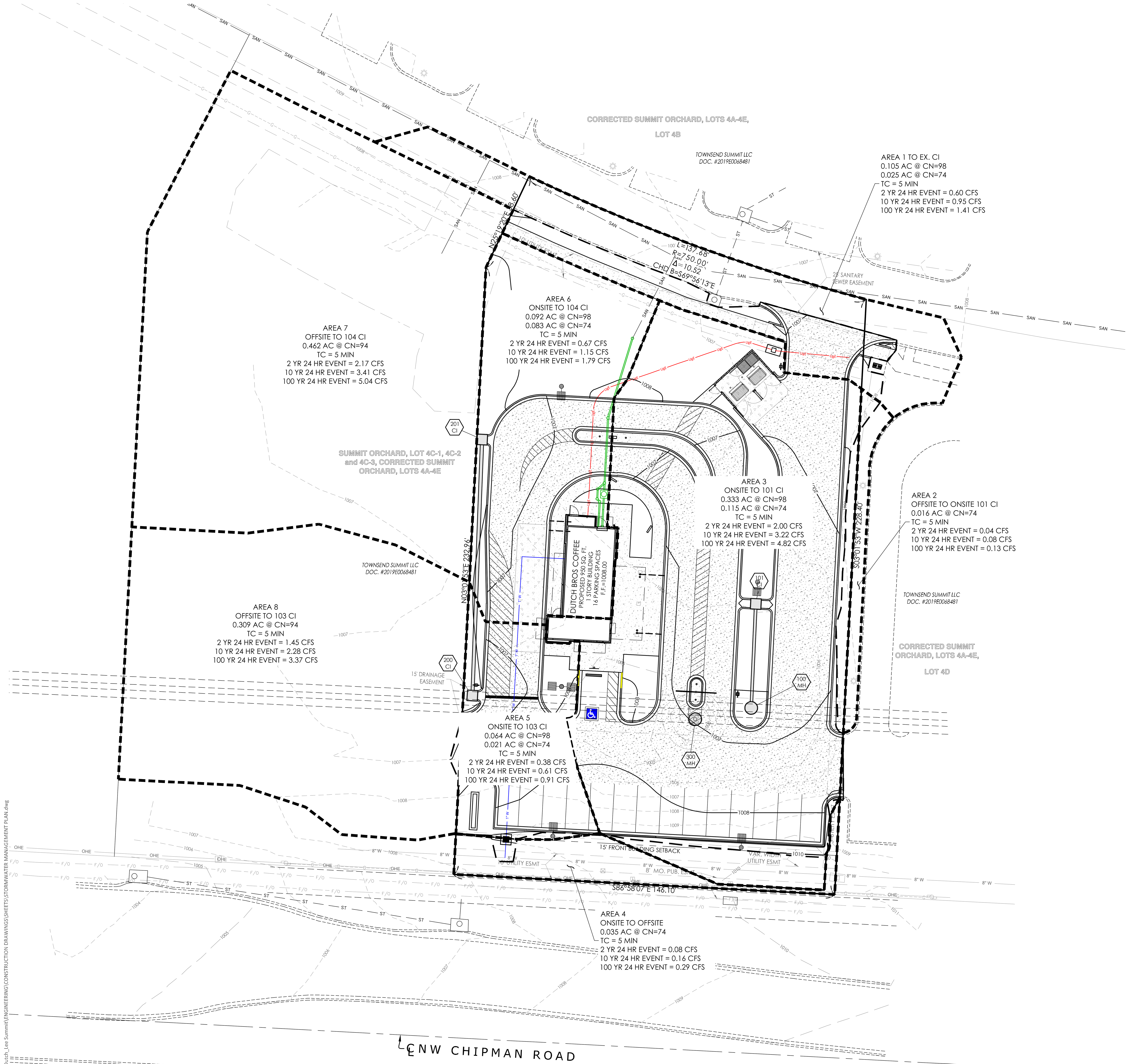

Row Labels	Peak Runoff (cfs)	Impervious Area	Pervious Area	Total Area	Composite CN	TC
AREA 1						
2-Year	0.60	0.105	0.025	0.13	93	5
10-Year	0.95	0.105	0.025	0.13	93	5
100-Year	1.41	0.105	0.025	0.13	93	5
AREA 2						
2-Year	0.04	0	0.016	0.016	74	5
10-Year	0.08	0	0.016	0.016	74	5
100-Year	0.13	0	0.016	0.016	74	5
AREA 3						
2-Year	2.00	0.333	0.115	0.448	92	5
10-Year	3.22	0.333	0.115	0.448	92	5
100-Year	4.82	0.333	0.115	0.448	92	5
AREA 4						
2-Year	0.08	0	0.035	0.035	74	5
10-Year	0.16	0	0.035	0.035	74	5
100-Year	0.29	0	0.035	0.035	74	5
AREA 5						
2-Year	0.38	0.064	0.021	0.085	92	5
10-Year	0.61	0.064	0.021	0.085	92	5
100-Year	0.91	0.064	0.021	0.085	92	5
AREA 6						
2-Year	0.67	0.092	0.083	0.175	87	5
10-Year	1.15	0.092	0.083	0.175	87	5
100-Year	1.79	0.092	0.083	0.175	87	5
AREA 7						
2-Year	2.17	0.462	0	0.462	94	5
10-Year	3.41	0.462	0	0.462	94	5
100-Year	5.04	0.462	0	0.462	94	5
AREA 8						
2-Year	1.45	0.309	0	0.309	94	5
10-Year	2.28	0.309	0	0.309	94	5
100-Year	3.37	0.309	0	0.309	94	5

"Little MO" says CALL BEFORE YOU DIG!
1-800-DIG-RITE

UNDERGROUND UTILITIES AND OSHA SAFETY NOTE:
Underground utilities and structures have been plotted from available information and therefore, their location must be considered approximate only. It is the responsibility of the individual contractors to notify the utility companies before actual construction. All O.S.H.A rules and regulations established for the type of construction required by these plans shall be strictly followed (ie. trenching, blasting, etc.)

1" = 20'
20 10 0 20 40
SCALE IN FEET

PREMIER DESIGN GROUP
100 MIDLAND PARK DRIVE
WENTZVILLE, MO 63385

STATE OF MISSOURI
STEVE MARION
NUMBER PE2006007195
PROFESSIONAL ENGINEER

ENGINEERS AUTHENTICATION
STEVEN D. MARION P.E.
PROFESSIONAL ENGINEER
PE 2006007195

Project
DUTCH BROS
LEE'S SUMMIT, MO
500 NW CHIPMAN RD.
LEE'S SUMMIT, MO 64086
TIM CROWLEY
501 PENNSYLVANIA PARKWAY SUITE 160
INDIANAPOLIS, IN 46280

Date 9-30-2021

Sheet Title
STORMWATER MANAGEMENT PLAN

Sheet Number
C-801

Project No.	2109720
Drawn By	A. JONES
Checked By	M. FOGARTY

NOT RELEASED FOR CONSTRUCTION

1" = 20'

20 10 0 20 40

SCALE IN FEET

"Little MO" says CALL BEFORE YOU DIG! 1-800-DIG-RITE

UNDERGROUND UTILITIES AND OSHA SAFETY NOTE:

Underground utilities and structures have been plotted from available information and therefore, their location must be considered approximate only. It is the responsibility of the individual contractors to notify the utility companies before actual construction. All O.S.H.A rules and regulations established for the type of construction required by these plans shall be strictly followed (ie. trenching, blasting, etc.)

\\Vault-pw\vault\CIVIL 3D PROJECTS\2021\2109720_TMC_Dutch_Lee Summit\ENGINEERING\CONSTRUCTION DRAWINGS\SHEETS\LANDSCAPE PLAN.dwg

LANDSCAPE PLAN NOTES:

GENERAL:
1. ALL LANDSCAPE MATERIAL SHALL CONFORM TO THE CITY OF LEE'S SUMMIT STANDARDS.
2. ALL NATURAL VEGETATION SHALL BE MAINTAINED WHERE IT DOES NOT INTERFERE WITH CONSTRUCTION OR THE PERMANENT PLAN OF OPERATION. EVERY EFFORT POSSIBLE SHALL BE MADE TO PROTECT EXISTING VEGETATION OR STRUCTURES FROM DAMAGE DUE TO EQUIPMENT USAGE. CONTRACTOR SHALL AT ALL TIMES PROTECT ALL MATERIALS AND WORK AGAINST INJURY TO THE PUBLIC.
3. THE LANDSCAPE CONTRACTOR SHALL BE RESPONSIBLE FOR ANY COORDINATION WITH OTHER SITE RELATED WORK BEING PERFORMED BY OTHER CONTRACTORS. REFER TO ARCHITECTURAL DRAWINGS FOR FURTHER COORDINATION OF WORK TO BE DONE.
4. UNDERGROUND FACILITIES, STRUCTURES AND UTILITIES MUST BE CONSIDERED APPROXIMATE ONLY. THERE MAY BE OTHERS NOT PRESENTLY SHOWN OR KNOWN. IT SHALL BE THE LANDSCAPE CONTRACTOR'S RESPONSIBILITY TO DETERMINE OR VERIFY THE EXISTENCE OF AND EXACT LOCATION OF ALL UTILITIES. (CALL MISSOURI ONE CALL, 1-800-DIG-RITE)
5. PLANT MATERIAL ARE TO BE PLANTED IN THE SAME RELATIONSHIP TO GRADE AS WAS GROWN IN NURSERY CONDITIONS. ALL PLANTING BEDS SHALL BE CULTIVATED TO A DEPTH OF 6" MINIMUM AND GRADED SMOOTH IMMEDIATELY BEFORE PLANTING OF PLANTS. PLANT GROUNDCOVER TO WITHIN 12" OF TRUNK OF TREES OR SHRUBS PLANTED WITHIN THE AREA.
6. IT SHALL BE THE LANDSCAPE CONTRACTOR'S RESPONSIBILITY TO:
   A. VERIFY ALL EXISTING AND PROPOSED FEATURES SHOWN ON THE DRAWINGS PRIOR TO COMMENCEMENT.
   B. REPORT ALL DISCREPANCIES FOUND WITH REGARD TO EXISTING CONDITIONS OR PROPOSED DESIGN TO THE ENGINEER OF RECORD IMMEDIATELY FOR A DECISION.
   C. STAKE THE LOCATIONS OF ALL PROPOSED PLANT MATERIAL AND OBTAIN THE APPROVAL OF THE OWNER'S REPRESENTATIVE OR LANDSCAPE ARCHITECT PRIOR TO INSTALLATION.
7. ITEMS SHOWN ON THIS DRAWING TAKE PRECEDENCE OVER THE MATERIAL LIST. IT SHALL BE THE LANDSCAPE CONTRACTOR'S RESPONSIBILITY TO VERIFY ALL QUANTITIES AND CONDITIONS PRIOR TO IMPLEMENTATION OF THIS PLAN. NO SUBSTITUTIONS OF TYPES OR SIZE OF PLANT MATERIALS WILL BE ACCEPTED WITHOUT WRITTEN APPROVAL FROM THE LANDSCAPE ARCHITECT.
8. PROVIDE SINGLE-STEM TREES UNLESS OTHERWISE NOTED IN PLANT SCHEDULE.
9. ALL PLANT MATERIAL SHALL COMPLY WITH THE RECOMMENDATIONS AND REQUIREMENTS OF ANSI Z60.1 "AMERICAN STANDARDS FOR NURSERY STOCK".
10. IT SHALL BE THE CONTRACTOR'S RESPONSIBILITY TO PROVIDE FOR INSPECTION OF THE PLANT MATERIAL BY THE LANDSCAPE ARCHITECT PRIOR TO ACCEPTANCE. PLANTS NOT CONFORMING EXACTLY TO THE PLANT LIST WILL NOT BE ACCEPTED AND SHALL BE REPLACED AT THE LANDSCAPE CONTRACTOR'S EXPENSE.
11. ALL BIDS ARE TO HAVE UNIT PRICES LISTED. THE OWNER HAS THE OPTION TO DELETE ANY PORTION OF THE CONTRACT PRIOR TO SIGNING THE CONTRACT OR BEGINNING WORK. THIS WILL BE A UNIT PRICE CONTRACT.
12. ALL PLANT MATERIAL TO BE TRANSPLANTED SHALL BE IN ACCORDANCE TO GUIDELINES SET BY AAN STANDARDS. TRANSPLANTED MATERIAL WILL NOT BE GUARANTEED BY THE LANDSCAPE CONTRACTOR.

INSURANCE:
1. THE LANDSCAPE CONTRACTOR SHALL SUBMIT CERTIFICATES OF INSURANCE FOR WORKMAN'S COMPENSATION AND GENERAL LIABILITY.

MULCH:
1. ALL MULCH TO BE SHREDDED OAK BARK MULCH AT 3" DEPTH AFTER COMPACTION(UNLESS OTHERWISE NOTED). MULCH SHALL BE CLEAN AND FREE OF ALL FOREIGN MATERIALS, INCLUDING WEEDS, MOLD, DELETERIOUS MATERIALS, ETC. PROVIDE 4' DIAMETER MULCH RING AROUND ALL NEW TREES WITH MIN. 3" DEPTH OF SHREDDED OAK BARK MULCH.
2. MIRAFI FABRIC SHALL BE USED BENEATH ALL GRAVEL MULCH BEDS.
3. LANDSCAPE BEDS NOT BORDERED BY CONCRETE CURBING OR WALKS SHALL BE SPADE CUT EDGE.

MAINTENANCE:
1. LANDSCAPE CONTRACTOR SHALL PROVIDE A SEPARATE PROPOSAL TO MAINTAIN ALL PLANTS, SHRUBS, GROUNDCOVER, PERENNIALS AND ANNUALS FOR A PERIOD OF 12 MONTHS AFTER ACCEPTANCE.
2. CONTRACTOR SHALL ENSURE THAT ONLY COMPETENT AND TRAINED PERSONNEL SHALL PROVIDE SUCH SERVICES AND THAT SUCH SERVICES BE PROVIDED IN A TIMELY MANNER.

TOPSOIL:
1. TOPSOIL MIX FOR ALL PROPOSED LANDSCAPE PLANTINGS SHALL BE FIVE (5) PARTS WELL-DRAINED SCREENED ORGANIC TOPSOIL TO ONE (1) PART CANADIAN SPHAGNUM PEAT MOSS AS PER PLANTING DETAILS. ROTO-TILL TOPSOIL MIX TO A DEPTH OF 6" MINIMUM AND GRADE SMOOTH.
2. PROVIDE A SOIL ANALYSIS, AS REQUESTED, MADE BY AN INDEPENDENT SOIL-TESTING AGENCY OUTLINING THE PERCENTAGE (%) OF ORGANIC MATTER, INORGANIC MATTER, DELETERIOUS MATERIAL, PH AND MINERAL CONTENT.
3. ANY FOREIGN TOPSOIL USED SHALL BE FREE OF ROOTS, STUMPS, WEEDS, BRUSH, STONES (LARGER THAN 1"), LITTER OR ANY OTHER EXTRANEOUS OR TOXIC MATERIAL.
4. LANDSCAPE CONTRACTOR TO APPLY PRE-EMERGENT HERBICIDE TO ALL PLANTING BEDS UPON COMPLETION OF PLANTING OPERATIONS AND BEFORE APPLICATION OF SHREDDED OAK BARK MULCH.

MISC. MATERIAL:
PROVIDE STAKES AND DEADMAN OF SOUND, NEW HARDWOOD, FREE OF KNOTHOLES AND DEFECTS.
1. TREE WRAP TAPE SHALL BE 4" MINIMUM, DESIGNED TO PREVENT BORER DAMAGE AND WINTER FREEZING. ADDITIONALLY, ONLY 3-PLY TYING MATERIAL SHALL BE USED.

TURF:
1. ALL DISTURBED LAWN AREAS TO BE SODDED UNLESS NOTED OTHERWISE WITH A TURF-TYPE KENTUCKY BLUE GRASS-FESCUE MIX. LAWN AREAS SHALL BE UNCONDITIONALLY WARRANTED FOR A PERIOD OF 90 DAYS FROM DATE OF FINAL ACCEPTANCE.
2. ANY POINTS CARRYING CONCENTRATED WATER LOADS AND ALL SLOPES OF 4:1 OR GREATER SHALL BE SODDED AND THE SOD SHALL HAVE STAKES PLACED.
3. ALL SOD SHALL BE PLACED A MAXIMUM OF 24 HOURS AFTER HARVESTING.
4. RECONDITION EXISTING LAWN AREAS DAMAGED BY CONTRACTOR'S OPERATIONS INCLUDING EQUIPMENT/ MATERIAL STORAGE AND MOVEMENT OF VEHICLES.
5. SOD CONTRACTOR TO ENSURE SOD IS PLACED BELOW SIDEWALK AND ALL PAVED AREA ELEVATIONS TO ALLOW FOR PROPER DRAINAGE.
6. OFF-SITE LAND DISTURBED SHALL BE SODDED AND RESTORED TO A CONDITION BETTER THAN EXISTING.

SIGHT TRIANGLES:
1. NO LANDSCAPE MATERIAL OR OTHER OBSTRUCTIONS SHALL BE PLACED OR BE MAINTAINED WITHIN THE SIGHT DISTANCE AREA SO AS NOT TO IMPEDE THE VISION BETWEEN A HEIGHT OF THIRTY INCHES (30") AND TEN FEET (10') ABOVE THE ADJACENT STREET OR PAVING SURFACES.
2. THE TRIANGLE ADJACENT TO STREET INTERSECTIONS SHALL BE FORMED BY MEASURING FROM THE POINT OF INTERSECTION OF THE FRONT AND SIDE LOT LINES A DISTANCE OF 20' MINIMUM ALONG SAID FRONT AND SIDE LOT LINES AND CONNECTING THE POINTS SO ESTABLISHED TO FORM THE SIGHT TRIANGLE AREA.
3. SIGHT TRIANGLES AT THE INTERSECTION OF A PUBLIC STREET AND A PRIVATE ACCESS WAY (EXCEPT FOR SINGLE FAMILY RESIDENCES) SHALL ALSO BE FORMED AS OUTLINED IN NOTE #2 ABOVE.

WARRANTY:
1. ALL PLANT MATERIAL (EXCLUDING GROUND COVER, PERENNIALS AND ANNUALS) ARE TO BE WARRANTED FOR A PERIOD OF 12 MONTHS AFTER INSTALLATION AT 100% OF THE INSTALLED PRICE.
2. ANY PLANT MATERIAL FOUND TO BE DEFECTIVE SHALL BE REMOVED AND REPLACED WITHIN 30 DAYS OF NOTIFICATION OR IN GROWTH SEASON DETERMINED TO BE BEST FOR THE PLANT.
3. ONLY ONE REPLACEMENT PER TREE OR SHRUB SHALL BE REQUIRED AT THE END OF THE WARRANTY PERIOD, UNLESS LOSS IS DUE TO FAILURE TO COMPLY WITH WARRANTY.
4. LAWN ESTABLISHMENT PERIOD WILL BE IN EFFECT ONCE THE LAWN HAS BEEN MOWED THREE TIMES. PLANT ESTABLISHMENT PERIOD SHALL COMMENCE ON THE DATE OF ACCEPTANCE AND 100% COMPLETION.

LANDSCAPE PLAN REQUIREMENTS

1. REQUIRED FRONT YARD LANDSCAPING
   A. ONE TREE SHALL BE PLANTED FOR EACH 30 FEET OF STREET FRONTAGE
   B. ONE SHRUB REQUIRED FOR EACH 20 FEET OF STREET FRONTAGE
2. REQUIRED OPEN YARD LANDSCAPING
   A. ONE TREE FOR EVERY 5,000 SQ. FT. OF LOT AREA NOT COVERED BY BUILDINGS/STRUCTURES
   B. TWO SHRUBS PER 5,000 SQ. FT. OF TOTAL LOT AREA
3. REQUIRED TRASH STORAGE CONTAINER LANDSCAPING
   A. REFER TO LANDSCAPE PLAN FOR SCREENING OF TRASH ENCLOSURE.

1. PROVIDED FRONT YARD LANDSCAPING
   A. TREES PROVIDED - 283.78' OF STREET FRONTAGE / 30 FEET = 10 TREES
   B. SHRUBS PROVIDED- 283.78' OF STREET FRONTAGE / 20 FEET = 14 SHRUBS
2. PROVIDED OPEN YARD LANDSCAPING
   A. TREES PROVIDED- 36,068 SQ. FT. - 950 BLDG SQ. FT. = 35,118 SQ. FT. / 5,000 SQ. FT. = 7 TREES
   B. SHRUBS PROVIDED- 36,068 SQ. FT. / 5,000 SQ. FT = 7.2 x 2 = 15 SHRUBS
3. REQUIRED TRASH STORAGE CONTAINER LANDSCAPING
   A. REFER TO LANDSCAPE PLAN - 7 EMERALD ARBORVITAE PROVIDED

SEED AND MULCH WITH GUARANTEE FOR ESTABLISHMENT OF GRASS WTIHIN 3-6 MONTHS.

PLANT SCHEDULE

TREES	QTY	BOTANICAL NAME	COMMON NAME	CONT	CAL.	SIZE
CH	10	CARPINUS BETULUS `COLUMNARIS`	COLUMNAR EUROPEAN HORNBEAM	B & B	3"CAL	6` TALL MIN.
TH	7	THUJA OCCIDENTALIS `EMERALD`	EMERALD ARBORVITAE	15 GAL		6` TALL MIN.
TS	7	TILIA CORDATA `SPRING GLOW`	LITTLELEAF LINDEN	B & B	3"CAL	6` TALL MIN.

SHRUBS	QTY	BOTANICAL NAME	COMMON NAME	SIZE
BG	6	BUXUS X `GREEN MOUND`	GREEN MOUND BOXWOOD	3 GAL
CA	27	CALAMAGROSTIS X ACUTIFLORA `KARL FOERSTER`	FEATHER REED GRASS	3 GAL
EC	7	EUONYMUS ALATUS `COMPACTUS`	COMPACT BURNING BUSH	3 GAL
PD	2	PHYSOCARPUS OPULIFOLIUS `DIABLO`	DIABLO NINEBARK	3 GAL
RG	10	RHUS AROMATICA `GRO-LOW`	GRO-LOW FRAGRANT SUMAC	3 GAL
SY	1	SYRINGA MEYERI `PALIBIN`	DWARF KOREAN LILAC	3 GAL
VI CA	9	VIBURNUM CARLESII `COMPACTUM`	KOREAN SPICE VIBURNUM	3 GAL

PREMIER DESIGN GROUP
100 MIDLAND PARK DRIVE
WENTZVILLE, MO 63385
MISSOURI CERTIFICATE OF AUTHORITY #:C-2002000031
MISSOURI CERTIFICATE OF AUTHORITY #:E-2002007849

STATE OF MISSOURI
STEVE MARION
NUMBER PE2006007195
PROFESSIONAL ENGINEER

ENGINEERS AUTHENTICATION
The responsibility for professional engineering liability on this project is hereby limited to the set of plans authenticated by the seal, signature, and date hereunder attached. Responsibility is disclaimed for all other engineering plans relative to this project and specifically excludes revision made to the plans after the date indicated.
STEVEN D. MARION P.E.
PROFESSIONAL ENGINEER
PE 2006007195

Project
DUTCH BROS
LEE'S SUMMIT, MO
500 NW CHIPMAN RD.
LEE'S SUMMIT, MO 64086
TM CROWLEY
501 PENNSYLVANIA PARKWAY SUITE 160
INDIANAPOLIS, IN 46280

Date 9-30-2021

#	Revision Date	Description of Changes

Sheet Title
LANDSCAPE PLAN

Sheet Number
L-100

Project No.	2109720
Drawn By	A. JONES
Checked By	M. FOGARTY

NOT RELEASED FOR CONSTRUCTION

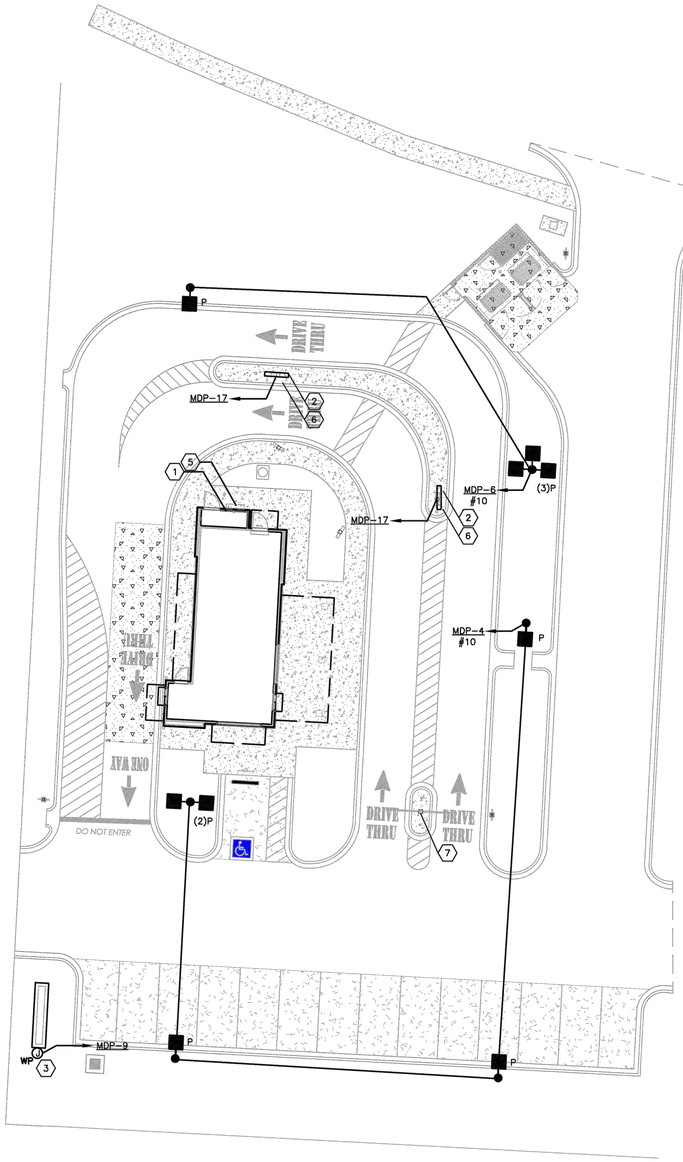

PLAN NORTH

1 ELECTRICAL SITE PLAN

1/16" = 1'-0"

0 8' 16' 32'

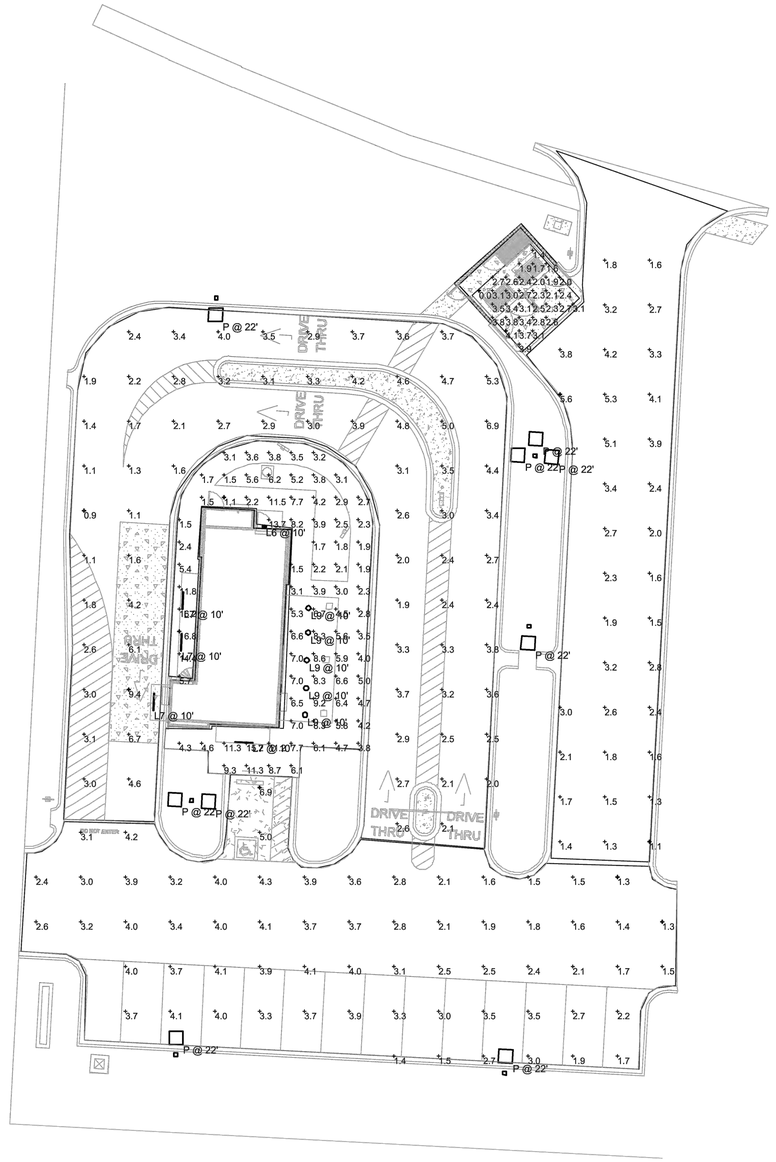

PLAN NORTH

2 SITE PHOTOMETRIC PLAN

1/16" = 1'-0"

0 8' 16' 32'

KEYED NOTES

1. LOCATION OF UTILITY METER DISCONNET SWITCH AND CT CABINET. REFER TO "RISER DIAGRAM" ON SHEET E3.01.
2. PROVIDE 120V ELECTRICAL CONNECTION WITH (2)#8 & (1)#8G. IN 2" PVC ROUTED BELOW GRADE FOR DRIVE-THRU BACKLIT MENU BOARD PER MANUFACTURER'S INSTRUCTIONS. CONDUIT SHALL COME UP IN CENTER OF POST. SIGN COMPANY REPRESENTATIVE TO GIVE EXACT LOCATIONS/DIMENSIONS FOR GC TO MATCH. CONTRACTOR SHALL REPAIR EXISTING PARKING SURFACES FROM TRENCHING TO MATCH PREVIOUS CONDITIONS.
3. PROVIDE 120V ELECTRICAL CONNECTION WITH (2)#8 & (1)#8G. IN 2" PVC ROUTED BELOW GRADE FOR NEW MONUMENT SIGN PER REPRESENTATIVE PRIOR TO ROUGH-IN. CONTRACTOR SHALL REPAIR EXISTING PARKING SURFACES FROM TRENCHING TO MATCH PREVIOUS CONDITIONS.
4. NOT USED.
5. LOCATION OF CABLE INTERNET DEMARC
6. PROVIDE 2" CONDUIT W/ PULL STRING 24" BEHIND MENU BOARD TO CHRISTY BOX FOR FUTURE DIGITAL MENU BOARD UPGRADE . COORDINATE W/ SIGN MANUFACTURER.
7. PROVIDE 2" CONDUIT W/ PULL STRING TO CHRISTY BOX BETWEEN "CHOOSE LANE" DIRECTIONAL SIGNAGE AND CLEARANCE BAR FOR FUTURE DRIVE THRU SENSORS.

MIN. DUTCH BROS REQUIREMENTS:

-5FTC AT BUILDING
-3FTC AT SITE/PARKING
-3FTC AT TRASH ENCLOSURE

SEE S1.4 FOR POLE BASE DETAIL

GENERAL NOTES

1. FOR UTILITY TRANSFORMER, TELEPHONE SERVICE, GAS, WATER, AND SANITARY SEWER LOCATIONS; SEE CIVIL SITE PLAN.
2. THE ELECTRICAL CONTRACTOR IS RESPONSIBLE FOR COORDINATION AND COMPLIANCE WITH ALL UTILITY COMPANIES REQUIREMENTS. INCOMING POWER AND TELEPHONE SERVICES IS EXISTING TO REMAIN. VERIFY REQUIREMENTS WITH UTILITIES PRIOR TO INSTALLATION.

SITE NOTES

WATER LINES, CONDUITS FOR ELECTRICAL, OR OTHER UTILITIES SHALL BE LOCATED SO AS TO NOT CONFLICT WITH REQUIRED TREE LOCATIONS FOR STREETS AND PARKING LOTS.

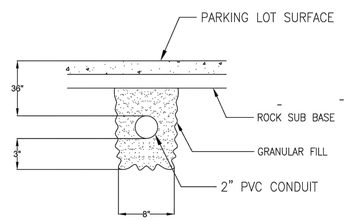

3 / E100 TRENCHING DETAIL

SCALE: N.T.S.

Statistics

Description	Symbol	Avg	Max	Min	Max/Min	Avg/Min
Building	+	5.7 fc	16.8 fc	1.1 fc	15.3:1	5.2:1
Drive Thru	+	3.2 fc	9.4 fc	0.9 fc	10.4:1	3.6:1
Drive Way	+	2.7 fc	5.6 fc	1.1 fc	5.1:1	2.5:1
Parking	+	3.0 fc	6.9 fc	1.3 fc	5.3:1	2.3:1
Trash	+	2.7 fc	4.1 fc	0.0 fc	N/A	N/A

Schedule

Symbol	Label	Quantity	Manufacturer	Catalog Number	Description	Number Lamps	Lumens Per Lamp	Light Loss Factor	Wattage
	L6	1	RAB LIGHTING INC.	WPLED26-WPLED26/D10 (WALLPACK) - ALED26-ALED26/D10 (AREA LIGHTER)	CAST FINNED METAL HOUSING, MACHINED METAL HEAT SINK, 1 CIRCUIT BOARD WITH 1 LED, MOLDED PLASTIC REFLECTOR WITH SEMI-SPECULAR FINISH, CLEAR FLAT GLASS LENS IN CAST BROWN PAINTED METAL FRAME.	1	3474	0.92	30
	L7	4	Self	WPLED26-WPLED26/D10 (WALLPACK) - ALED26-ALED26/D10 (AREA LIGHTER)	CROWN-L90-277V 830_BA110	1	4200	0.92	40
	L9	5	DMF LIGHTING	DRD5S-4R-10930	DRD5S-4R-10930	1	1015	0.92	11.8
	P	9	NLS Lighting	NV-1-T4-48L-1-40K-UNV-HSS	T4 OPTICS WITH BLACK HSS	1	9674	0.92	156

ARCHITECT
CORALIC, LLC
EDIN CORALIC
2643 CAROUSEL DRIVE,
ST. LOUIS, MO 63125
p: 314.578.4953
edin@coralicarchitecture.com

STRUCTURAL ENGINEER
JAMES C. KREHER
JIM KREHER
208 N. MAIN STREET,
COLUMBIA, IL 62236
p: 618.281.8505
jimk@kreherengineering.com

MEP ENGINEER
Case Engineering
DARRELL R. CASE
796 MERUS CT.,
FENTON, MO 63026
T. 636.349.1600 F. 636.349.1730
dcase@caseengineeringinc.com

XX.XX.XX

Project No: MO0102

Dutch Bros Coffee - New Freestanding Store

500 NW Chipman Road, Lee's Summit, Missouri 64086
for: Dutch Bros Coffee
110 SW 4th St.
Grants Pass, OR 97526

ISSUED FOR PERMIT:
10.8.2021

REV:	DATE:	DESCRIPTION:

SHEET NAME:

ELECTRICAL
SITE & PHOTOMETRIC
PLAN

SHEET NUMBER:

E0.01

© 2020 DB Franchising USA, LLC

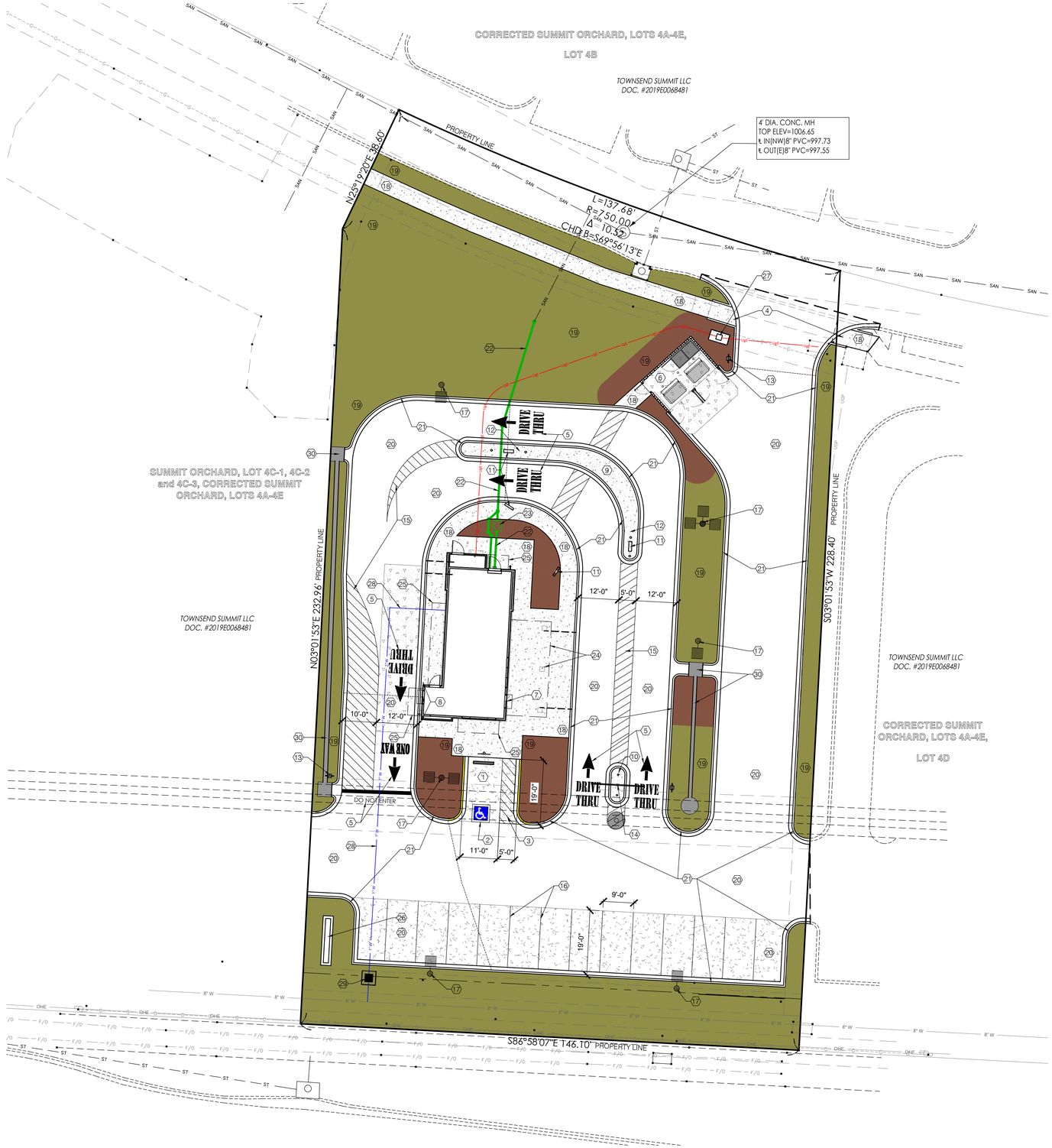

1 ARCHITECTURAL SITE PLAN

SCALE: 1/16" = 1'-0"

SITE PLAN KEYNOTES: (X)

1. ACCESSIBLE PARKING STALL W/ ACCESSIBLE PARKING ONLY VERTICAL SIGN- RE: CIVIL PLANS.
2. INTERNATIONAL ACCESSIBLE SYMBOL ON PAVEMENT- RE: CIVIL PLANS.
3. PAINTED ACCESSIBLE AISLE- RE: CIVIL PLANS.
4. ACCESSIBLE CURB-CUT RAMP, TYP.- RE: CIVIL PLANS.
5. PAINTED DIRECTIONAL SIGNAGE- RE: CIVIL PLANS.
6. TRASH ENCLOSURE W/ LOCKING GATES. REFER TO SHEETS A9.0-A9.1 FOR DETAILS; COORD. W/ LOCAL REFUSE SERVICE PROVIDER FOR MIN. REQUIREMENTS AND CLEARANCES.
7. WALK-UP SERVICE WINDOW
8. 6" BOLLARD W/ DB BOLLARD COVERS- SEE FLOOR PLANS.
9. CONC. MEDIAN-"RUNNERS" SIDEWALK- RE: CIVIL PLANS.
10. PROVIDE 2" CONDUIT W/ PULL STRING TO CHRISTY BOX FOR FUTURE DRIVE-THRU SENSORS.
11. POLE MOUNTED STATIC BACKLIT LED MENU BOARD, BY OTHERS, PROVIDE POWER AND DATA IN WEATHERPROOF J-BOX, REFERENCE SHEET SP1.1
12. PROVIDE 2" CONDUIT W/ PULL STRING TO CHRISTY BOX, FOR FUTURE DIGITAL MENU BOARD UPGRADE
13. POLE MOUNTED DIRECTIONAL SIGNAGE, BY OTHERS, REFERENCE SHEET SP1.2
14. CLEARANCE BAR, BY OTHERS, REFERENCE SHEET SP1.2
15. PAINT STRIPING, BEFORE AND AFTER CONCRETE MEDIAN AND ESCAPE LANE, STRIPES: 4" WIDE, 24' O.C., SAFETY WHITE- RE: CIVIL.
16. PARKING SPACE STRIPING- RE: CIVIL PLANS.
17. SITE LIGHT- RE: ELECTRICAL PLANS.
18. CONCRETE SIDEWALK- RE: CIVIL PLANS.
19. PROPOSED LANDSCAPING AREAS- RE: LANDSCAPE PLANS.
20. PROPOSED PAVEMENT- RE: CIVIL PLANS.
21. PROPOSED CONCRETE CURB- RE: CIVIL PLANS.
22. PROPOSED SANITARY SEWER- RE: CIVIL PLANS.
23. PROPOSED BELOW GROUND GREASE INTERCEPTOR- RE: PLUMBING PLANS.
24. PROPOSED FRAMED BUILDING CANOPY AND COLUMNS- RE: FLOOR PLANS, DETAILS, SECTIONS AND STRUCTURAL PLANS.
25. SHOWN DASHED, ALUMINUM PREFABRICATED CANOPY.
26. NEW MONUMENT SIGN- RE: CIVIL AND SIGNAGE PLANS- SHOWN FOR REFERENCE ONLY- PERMITTED UNDER A SEPARATE PERMIT.
27. PROPOSED ELECTRIC TRANSFORMER LOCATION- VERIFY WITH LOCAL ELECTRICAL COMPANY.
28. DOMESTIC WATER- RE: CIVIL PLANS.
29. DOMESTIC WATER METAR- RE: CIVIL PLANS.
30. STORM SEWER- RE: CIVIL PLANS.

ARCHITECT
CORALIC, LLC
EDIN CORALIC
9700 MACKENZIE ROAD, STE. 222,
ST. LOUIS, MO 63123
p: 314.578.4953
e: edin@coralicarchitecture.com

STRUCTURAL ENGINEER
JAMES C. KREHER
JIM KREHER
208 N. MAIN STREET,
COLUMBIA, IL 62236
p: 618.281.8505
jimk@kreherengineering.com

MEP ENGINEER
Case Engineering
DARRELL R. CASE
796 MERUS CT.,
FENTON, MO 63026
T. 636.349.1600 F. 636.349.1730
dcase@caseengineeringinc.com

EDIN CORALIC ARCHITECT
A-2013031004 - EXP. 12-31-2021

STATE OF MISSOURI
EDIN CORALIC
NUMBER
A-2013031004
ARCHITECT
10.11.2021

MISSOURI CERTIFICATE OF AUTHORITY NO. 2013041393

Project No: MO0102

Dutch Bros Coffee - New Freestanding Store

500 NW Chipman Road, Lee's Summit, Missouri 64086
for: Dutch Bros Coffee
110 SW 4th St.
Grants Pass, OR 97526

ISSUED FOR PERMIT:
10.11.2021

REV:	DATE:	DESCRIPTION:

SHEET NAME:

ARCHITECTURAL SITE PLAN

SHEET NUMBER:

SP1.0

© 2020 DB Franchising USA, LLC

SCOPE OF WORK: PROVIDE (2) D/F ILLUMINATED MENU SIGNS V5 - PLATE-MOUNTED

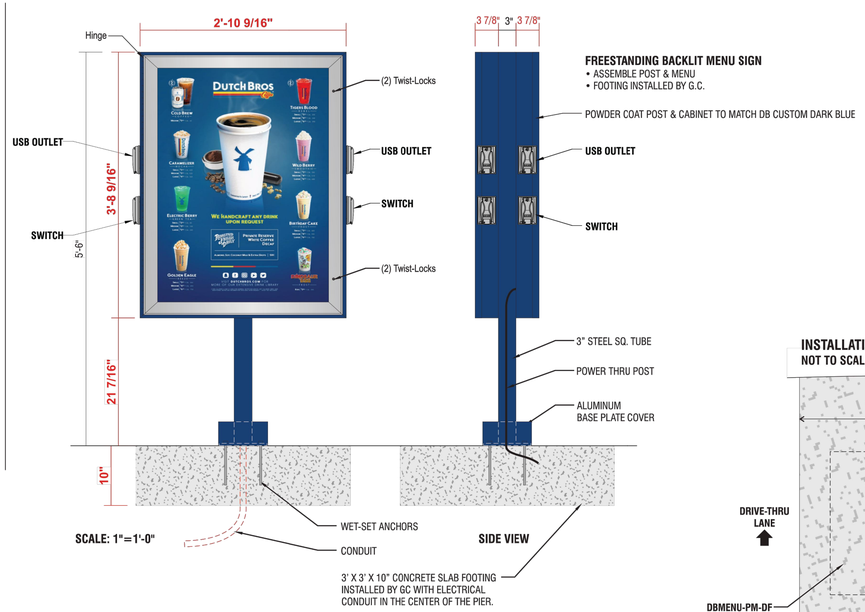

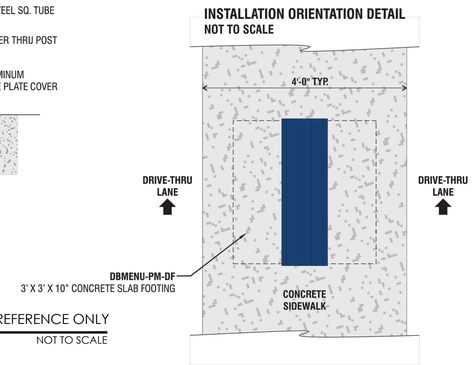

1 ILLUMINATED DBL. MENU BOARD SIGN W/ POST BY OTHERS- FOR REFERENCE ONLY

NOT TO SCALE

SCOPE OF WORK: PROVIDE (2) S/F ILLUMINATED MENU SIGNS V5 - PLATE-MOUNTED

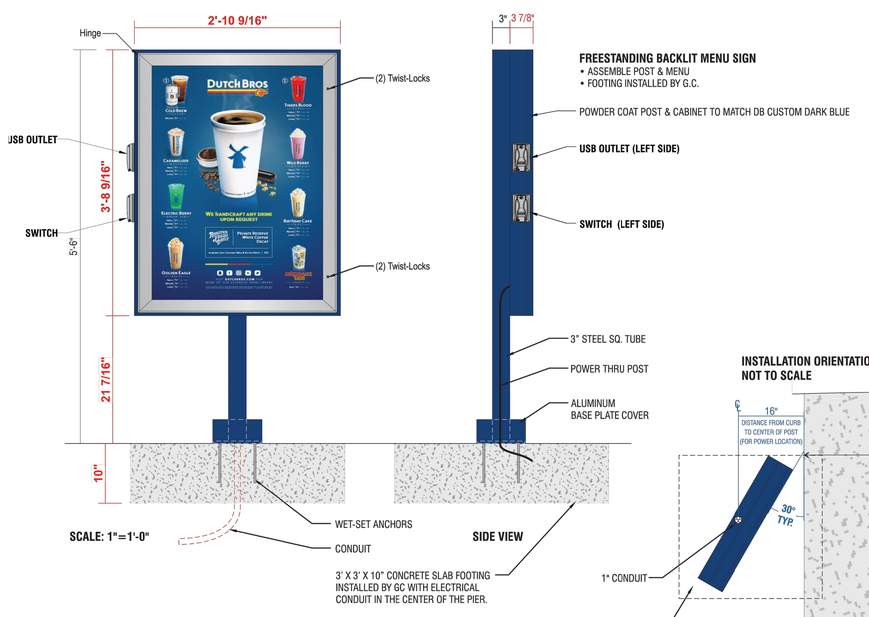

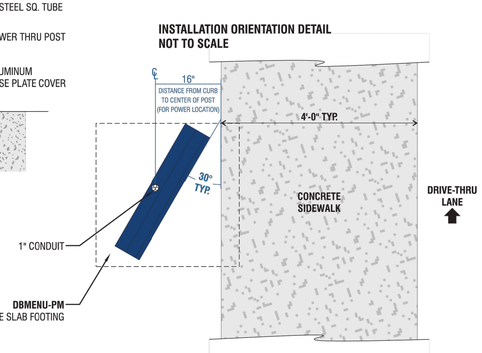

2 ILLUMINATED SINGLE MENU BOARD SIGN W/ POST BY OTHERS- FOR REFERENCE ONLY

NOT TO SCALE

NOTES:

1. ALL SIGNAGE IS BY OTHERS/ SEPARATE SUBMITTAL;SHOWN HERE FOR REFERENCE ONLY.
2. REFER TO STRUCTURAL AND ELECTRICAL PLANS FOR ADDITIONAL INFO.

FABRICATED ALUMINUM CABINET PAINTED DB CUSTOM GREY.
REVEAL PAINTED DB CUSTOM DARK BLUE.
BACKED-UP WHITE ACRYLIC LETTERS.
1ST SURFACE 230-015 YELLOW, 230-33 RED, & 230-127 INTENSE BLUE PSV.
WHITE LED ILLUMINATION.
FABRICATED ALUMINUM SKIRT PAINTED DB CUSTOM DARK BLUE WITH MEDIUM TEXTURE COAT.

3 MONUMENT SIGN BY OTHERS- FOR REFERENCE ONLY

NOT TO SCALE

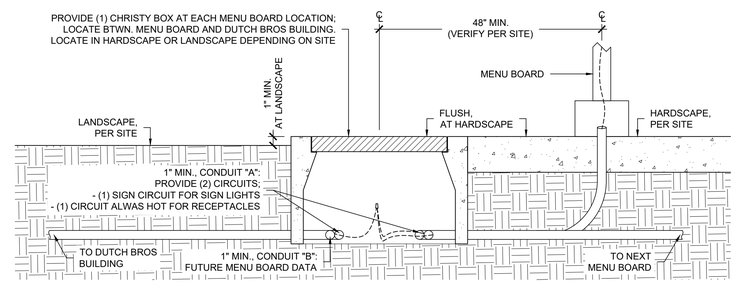

4 MENU BOARD & CHRISTY BOX DETAIL - REFERENCE ONLY

NOT TO SCALE

ARCHITECT
CORALIC, LLC
EDIN CORALIC
9700 MACKENZIE ROAD, STE. 222,
ST. LOUIS, MO 63123
p: 314.578.4953
e: edin@coralicarchitecture.com

STRUCTURAL ENGINEER
JAMES C. KREHER
JIM KREHER
208 N. MAIN STREET,
COLUMBIA, IL 62236
p: 618.281.8505
jimk@kreherengineering.com

MEP ENGINEER
Case Engineering
DARRELL R. CASE
796 MERUS CT.,
FENTON, MO 63026
T. 636.349.1600 F. 636.349.1730
dcase@caseengineeringinc.com

EDIN CORALIC ARCHITECT
A-2013031004 - EXP. 12-31-2021

STATE OF MISSOURI
EDIN CORALIC
NUMBER
A-2013031004
ARCHITECT
10.11.2021

MISSOURI CERTIFICATE OF
AUTHORITY NO. 2013041393

Project No: MO0102

Dutch Bros Coffee - New Freestanding Store

500 NW Chipman Road, Lee's Summit, Missouri 64086
for: Dutch Bros Coffee
110 SW 4th St.
Grants Pass, OR 97526

ISSUED FOR PERMIT:
10.11.2021

REV:	DATE:	DESCRIPTION:

SHEET NAME:

SITE SIGNAGE
DETAILS

SHEET NUMBER:

SP1.1

© 2020 DB Franchising USA, LLC

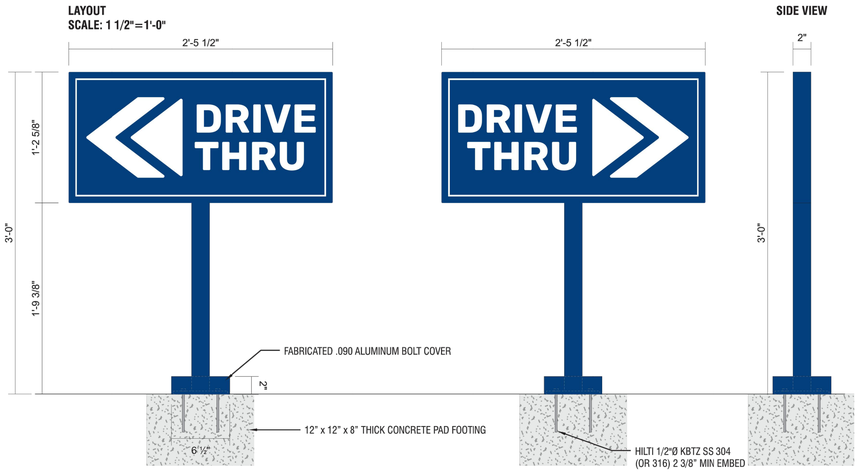

DIAMOND GRADE REFLECTIVE WHITE VINYL WITH DIGITALLY PRINTED PMS 541 C BLUE BACKGROUND
2" X 2" SQUARE TUBE ALUMINUM FRAME & POST WITH ALUMINUM FACES & 3/8" X 6" X 6" PLATE
FABRICATED .090 ALUMINUM BOLT COVER
PAINT PMS 541 C
INSTALL PLATE-MOUNT SIGN WITH HILTI KWIK BOLTS
PAD FOOTING INSTALLED BY GC

1 NON-ILLUMINATED DIRECTIONAL SIGN W/ POST BY OTHERS- FOR REFERENCE ONLY
NOT TO SCALE

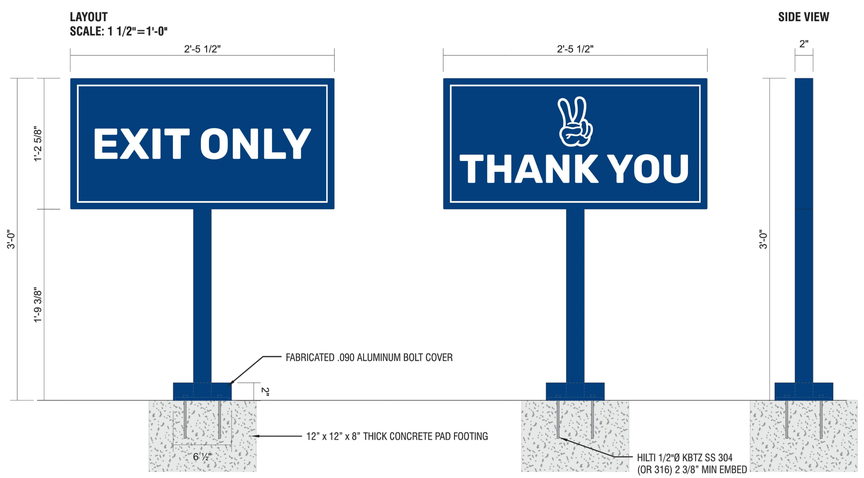

DIAMOND GRADE REFLECTIVE WHITE VINYL WITH DIGITALLY PRINTED PMS 541 C BLUE BACKGROUND
2" X 2" SQUARE TUBE ALUMINUM FRAME & POST WITH ALUMINUM FACES & 3/8" X 6" X 6" PLATE
FABRICATED .090 ALUMINUM BOLT COVER
PAINT PMS 541 C
INSTALL PLATE-MOUNT SIGN WITH HILTI KWIK BOLTS
PAD FOOTING INSTALLED BY GC

2 NON-ILLUMINATED DIRECTIONAL SIGN W/ POST BY OTHERS- FOR REFERENCE ONLY
NOT TO SCALE

SCOPE OF WORK: MANUFACTURE & INSTALL (1) S/F POST MOUNTED DOUBLE ARM CLEARANCE BAR WITH PIVOTING ARMS

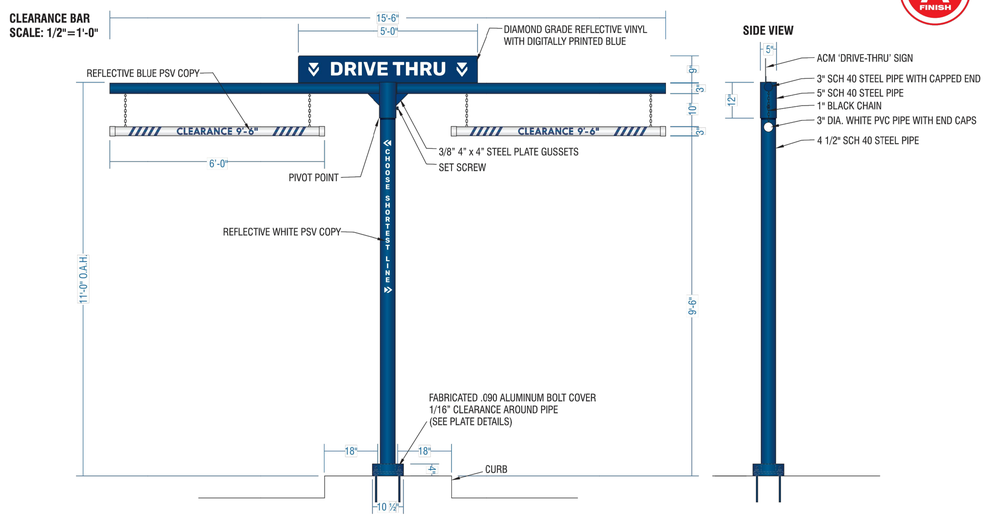

3 DOUBLE CLEARANCE BAR BY OTHERS - FOR REFERENCE ONLY
NOT TO SCALE

NOTES:

1. ALL SIGNAGE IS BY OTHERS/ SEPARATE SUBMITTAL;SHOWN HERE FOR REFERENCE ONLY.
2. REFER TO STRUCTURAL AND ELECTRICAL PLANS FOR ADDITIONAL INFO.

ARCHITECT
CORALIC, LLC
EDIN CORALIC
9700 MACKENZIE ROAD, STE. 222,
ST. LOUIS, MO 63123
p: 314.578.4953
e: edin@coralicarchitecture.com

STRUCTURAL ENGINEER
JAMES C. KREHER
JIM KREHER
208 N. MAIN STREET,
COLUMBIA, IL 62236
p: 618.281.8505
jimk@kreherengineering.com

MEP ENGINEER
Case Engineering
DARRELL R. CASE
796 MERUS CT.,
FENTON, MO 63026
T. 636.349.1600 F. 636.349.1730
dcase@caseengineeringinc.com

EDIN CORALIC ARCHITECT
A-2013031004 - EXP. 12-31-2021

STATE OF MISSOURI
EDIN CORALIC
NUMBER
A-2013031004
ARCHITECT
10.11.2021

MISSOURI CERTIFICATE OF AUTHORITY NO. 2013041393

Project No: MO0102
Dutch Bros Coffee - New Freestanding Store

500 NW Chipman Road, Lee's Summit, Missouri 64086
for: Dutch Bros Coffee
110 SW 4th St.
Grants Pass, OR 97526

ISSUED FOR PERMIT:
10.11.2021

REV:	DATE:	DESCRIPTION:

SHEET NAME:

SITE SIGNAGE DETAILS

SHEET NUMBER:

SP1.2

© 2020 DB Franchising USA, LLC

SCOPE OF WORK: MANUFACTURE & INSTALL (2) SETS OF ILLUMINATED CHANNEL LETTERS WITH REMOTE RACEWAYS

DBCL10-REMOTE RW
SCALE: 3/4"=1'-0"

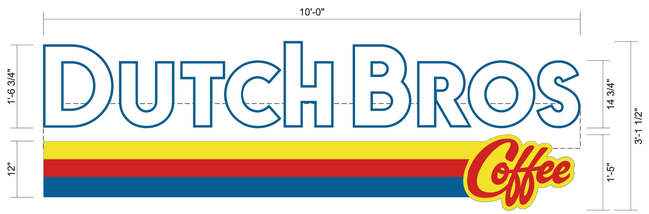

SIDE VIEW

FABRICATED REMOTE RACEWAY
.040 PRE-COAT WHITE ALUMINUM

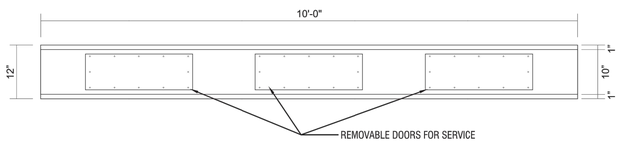

ATTACHMENT DETAIL
SCALE: 3/4"=1'-0"
CHANNEL LETTERS WITH REMOTE RACEWAY

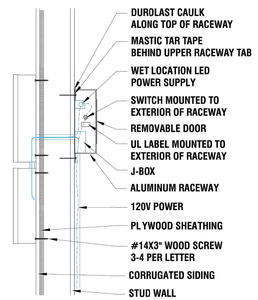

INTERNALLY ILLUMINATED FACE-LIT FLUSH MOUNTED CHANNEL LETTERS
5" DEEP CHANNEL LETTERS.
RETURNS & TRIM CAP PAINTED TO MATCH PANTONE 7691 C "INTENSE BLUE".
WHITE ACRYLIC FACES.
230-127 INTENSE BLUE PSV, 230-015 YELLOW PSV, 230-33 RED PSV.
LED ILLUMINATION.
FLUSH MOUNTED CHANNEL LETTERS WITH REMOTE MOUNTED RACEWAY.

1 ILLUMINATED CHANNEL LETTERS/ SIGNAGE BY OTHERS - REFERENCE ONLY
NOT TO SCALE

SCOPE OF WORK: MANUFACTURE & INSTALL (2) ILLUMINATED WINDMILL LOGOS

DBW13
SCALE: 3/4"=1'-0"

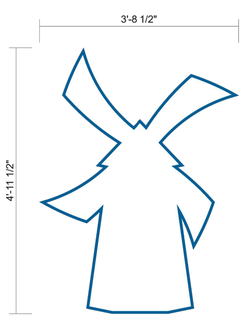

ATTACHMENT DETAIL

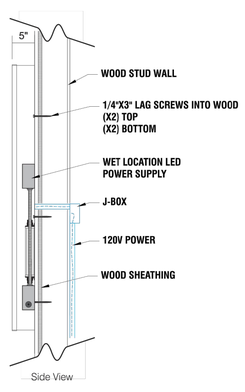

SELF CONTAINED CHANNEL LOGO

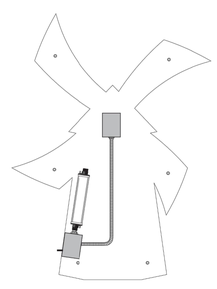

INTERNALLY ILLUMINATED FACE-LIT FLUSH MOUNTED CHANNEL WRAP LOGO
5" DEEP CHANNEL WRAP.
RETURNS & TRIM CAP PAINTED TO MATCH PANTONE 7691 C "INTENSE BLUE".
WHITE ACRYLIC FACE.
230-127 INTENSE BLUE PSV OUTLINE.
LED ILLUMINATION.
FLUSH MOUNTED SELF CONTAINED INSTALLATION.

3 ILLUMINATED WINDMILL LOGO/ SIGNAGE BY OTHERS - REFERENCE ONLY
NOT TO SCALE

SCOPE OF WORK: PROVIDE (4) ILLUMINATED MENU SIGNS V5 - WALL-MOUNTED

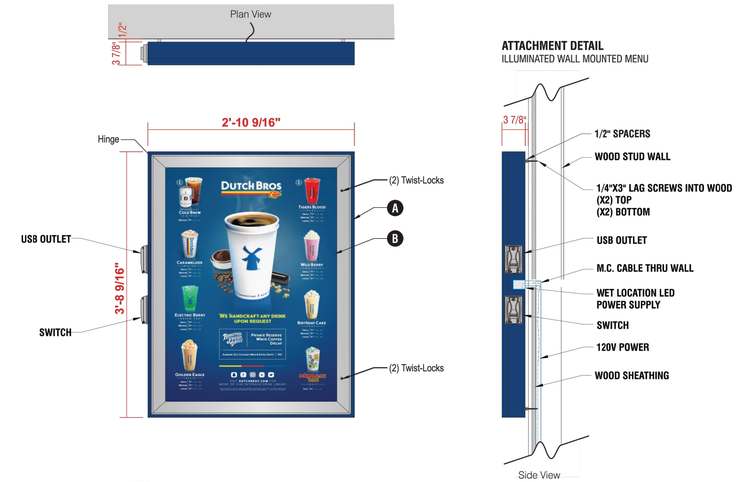

2 ILLUMINATED BUILDING MENU SIGN BY OTHERS - FOR REFERENCE ONLY
NOT TO SCALE

SIDE VIEW
SCALE: 1/2"= 1'-0"

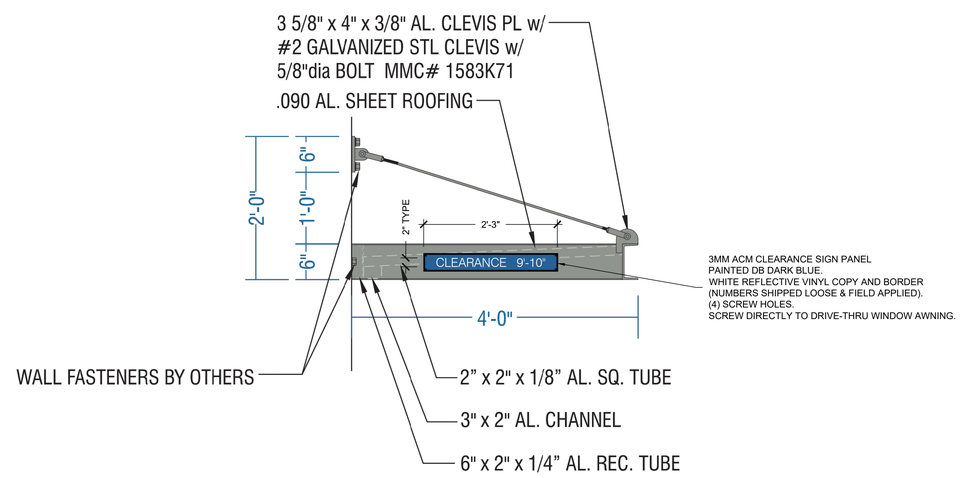

4 AWNING CLEARANCE SIGN BY OTHERS
AT DRIVE-THRU WINDOW - REFERENCE ONLY
NOT TO SCALE

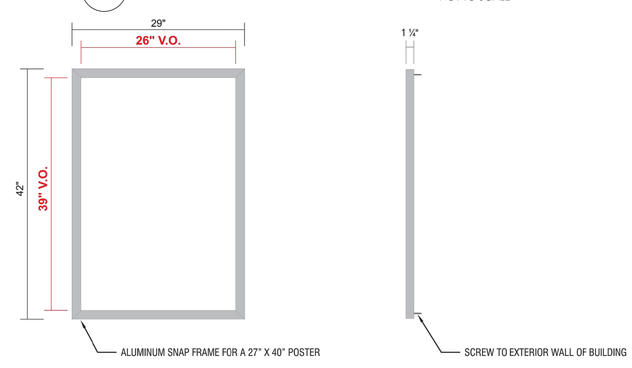

5 NON-ILLUMINATED SNAP FRAME MENU BY OTHERS - REFERENCE ONLY
NOT TO SCALE

DUTCH BROS Coffee

CORALIC ARCHITECTURE

ARCHITECT
CORALIC, LLC
EDIN CORALIC
9700 MACKENZIE ROAD, STE. 222,
ST. LOUIS, MO 63123
p: 314.578.4953
e: edin@coralicarchitecture.com

STRUCTURAL ENGINEER
JAMES C. KREHER
JIM KREHER
208 N. MAIN STREET,
COLUMBIA, IL 62236
p: 618.281.8505
jimk@kreherengineering.com

MEP ENGINEER
Case Engineering
DARRELL R. CASE
796 MERUS CT.,
FENTON, MO 63026
T. 636.349.1600 F. 636.349.1730
dcase@caseengineeringinc.com

EDIN CORALIC ARCHITECT
A-2013031004 - EXP. 12-31-2021

STATE OF MISSOURI
EDIN CORALIC
NUMBER A-2013031004
ARCHITECT
10.11.2021

MISSOURI CERTIFICATE OF AUTHORITY NO. 2013041393

Project No: MO0102
Dutch Bros Coffee - New Freestanding Store
500 NW Chipman Road, Lee's Summit, Missouri 64086
for: Dutch Bros Coffee
110 SW 4th St.
Grants Pass, OR 97526

ISSUED FOR PERMIT:
10.11.2021

REV:	DATE:	DESCRIPTION:

SHEET NAME:
BUILDING SIGNAGE DETAILS

SHEET NUMBER:
SP1.3

© 2020 DB Franchising USA, LLC

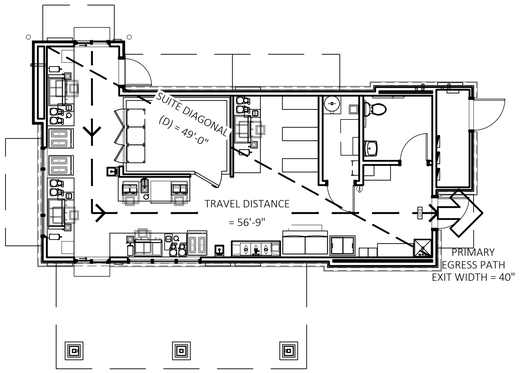

3 FIRE/ LIFE SAFETY PLAN

SCALE: 1/8" = 1'-0"

COOLER GENERAL NOTES:

1. COOLER INSULATION VALUES FOR WALLS, CEILING, AND DOORS SHALL BE MIN. R-25
2. AUTOMATIC DOOR CLOSERS SHALL BE PROVIDED THAT FULLY CLOSE WALK-IN DOORS THAT HAVE BEEN CLOSED TO WITHIN 1 INCH OF FULL CLOSURE
3. DOORWAYS SHALL HAVE STRIP DOORS, CURTAINS, SPRING-HINGED DOORS OR OTHER METHOD OF MINIMIZING INFILTRATION WHEN DOORS ARE OPEN

GENERAL NOTES:

1. THIS DRAWING IS FOR EQUIPMENT LAYOUT PURPOSES ONLY. PLEASE SEE FLOOR PLAN FOR FULLY DIMENSIONED PARTITION LOCATIONS AND ASSEMBLIES.
2. NOTE: PLEASE SEE SHEET G1.0, COVER SHEET, FOR CODE SUMMARY, BUILDING DATA AND EXIT ACCESS REQUIREMENTS.
3. G.C. TO VERIFY ALL DIMENSIONS IN THE FIELD BEFORE COMMENCING CONSTRUCTION.
4. ALL FIRE EXTINGUISHERS SHALL BE STATE OF MISSOURI CERTIFIED. ALL FIRE EXTINGUISHERS SHALL BE BE PROPERLY MOUNTED AT THE HEIGHT REQUIREMENTS OF NO HIGHER THAN 4'-6" A.F.F. TO THE TOP OF THE EXTINGUISHER AND AT LEAST 6" FROM FLOOR TO THE BOTTOM OF EXTINGUISHER. (NFPA 10: 6.1.3.8)
5. ALL PROPERLY MOUNTED FIRE EXTINGUISHERS SHALL NOT EXCEED 75' OF TRAVEL DISTANCE APART. (NFPA 1: 6.1)
6. FIRE EXTINGUISHERS SHALL BE CONSPICUOUSLY LOCATED WHERE THEY ARE READILY ACCESSIBLE AND IMMEDIATELY AVAILABLE IN THE EVENT OF FIRE. (NFPA 10: 6.1.3)
7. FIRE EXTINGUISHERS SHALL BE LOCATED ALONG NORMAL PATHS OF TRAVEL, INCLUDING EXITS FROM AREAS. (NFPA 10: 6.1.3)
8. FIRE EXTINGUISHERS SHALL NOT BE OBSTRUCTED OR OBSCURED FROM VIEW. (NFPA 10: 6.1.3.3)
7. TACTILE SIGNAGE SHALL BE PROVIDED AT ALL EXIT DOORS TO MEET THE FOLLOWING CRITERIA:
   A. TACTILE SIGNAGE SHALL BE LOCATED AT EACH EXIT DOOR REQUIRING AN EXIT SIGN;
   B. TACTILE SIGNAGE SHALL READ AS FOLLOWS: "EXIT";
   C. TACTILE SIGNAGE SHALL COMPLY WITH ICC/ANSI A117.1

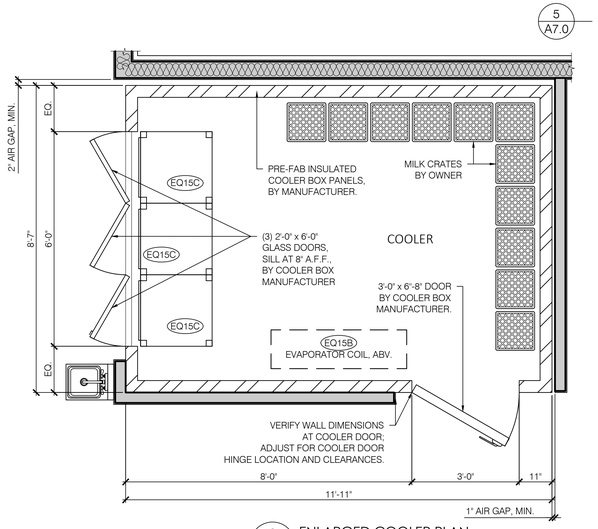

2 ENLARGED COOLER PLAN

SCALE: 1/2" = 1'-0"

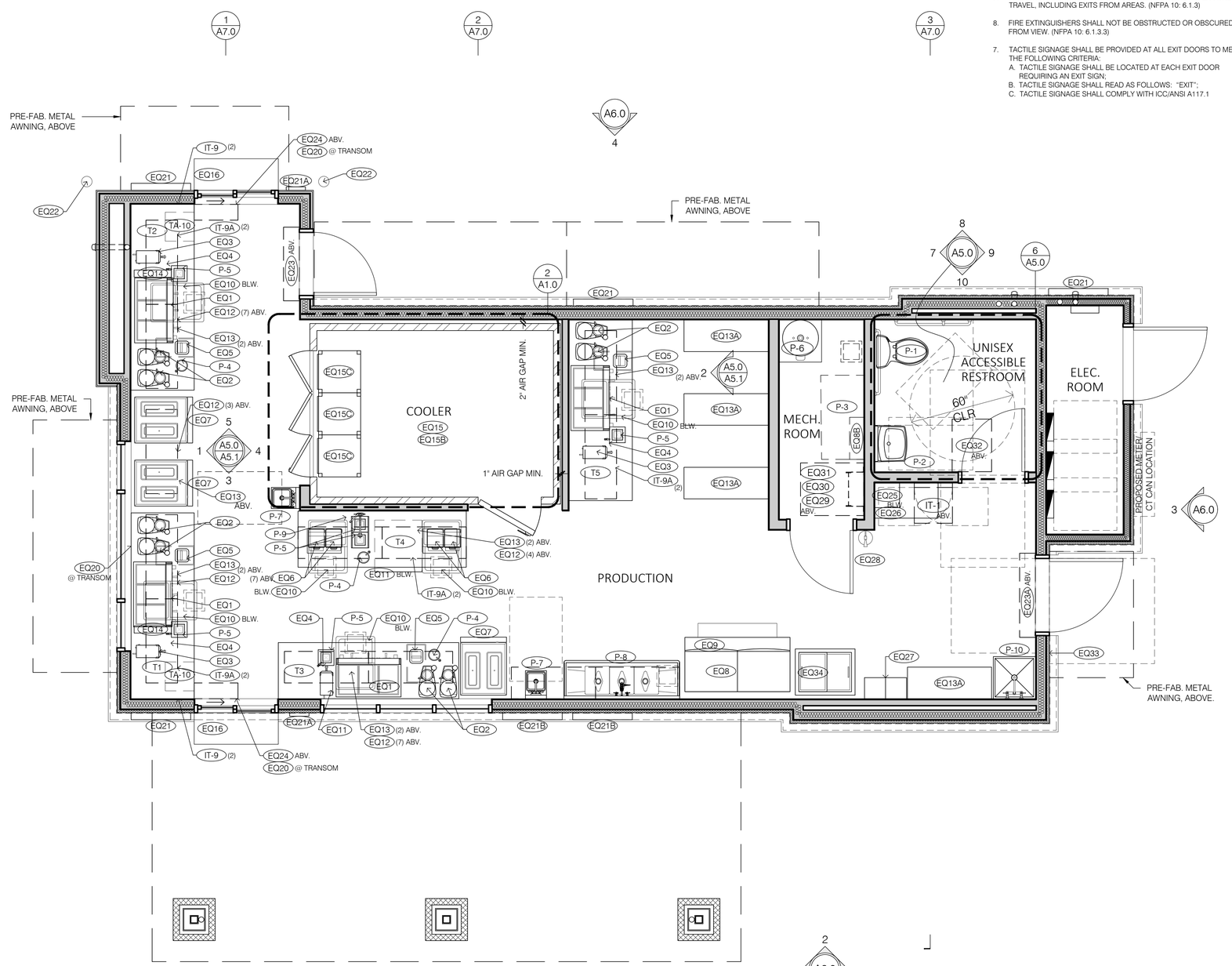

1 EQUIPMENT PLAN - A1

SCALE: 3/8" = 1'-0"

ARCHITECT
CORALIC, LLC
EDIN CORALIC
9700 MACKENZIE ROAD, STE. 222,
ST. LOUIS, MO 63123
p: 314.578.4953
e: edin@coralicarchitecture.com

STRUCTURAL ENGINEER
JAMES C. KREHER
JIM KREHER
208 N. MAIN STREET,
COLUMBIA, IL 62236
p: 618.281.8505
jimk@kreherengineering.com

MEP ENGINEER
Case Engineering
DARRELL R. CASE
796 MERUS CT.,
FENTON, MO 63026
T. 636.349.1600 F. 636.349.1730
dcase@caseengineeringinc.com

EDIN CORALIC ARCHITECT
A-2013031004 - EXP. 12-31-2021

STATE OF MISSOURI
EDIN CORALIC
NUMBER A-2013031004
ARCHITECT
10.11.2021

MISSOURI CERTIFICATE OF AUTHORITY NO. 2013041393

Project No: MO0102

Dutch Bros Coffee - New Freestanding Store

500 NW Chipman Road. Lee's Summit, Missouri 64086
for: Dutch Bros Coffee
110 SW 4th St.
Grants Pass, OR 97526

ISSUED FOR PERMIT:
10.11.2021

REV:	DATE:	DESCRIPTION:

SHEET NAME:

EQUIPMENT/ ENLARGED COOLER/ FIRE-LIFE SAFETY PLANS

SHEET NUMBER:

A1.0

© 2020 DB Franchising USA, LLC

EQUIPMENT SCHEDULE - DB250-A1

	EQUIPMENT INFORMATION								POWER REQUIREMENTS				PLUMBING REQUIREMENTS						NOTES
	ID TAG	EQUIPMENT DESCRIPTION	PROVIDED BY	INSTALLED BY	QUANTITY	MANUFACTURER	MODEL NUMBER	COLOR/ OPTIONS	VOLTS	PHASE	AMPS	CONNECTION TYPE	WATER TYPE	WATER TEMP	CONNECTION TYPE	CONNECTION SIZE	PSI	DRAIN REQUIREMENTS	DBC: DUTCH BROS CORPORATE GC: GENERAL CONTRACTOR KES: KITCHEN EQUIPMENT SUPPLIER PC: PLUMBING CONTRACTOR EC: ELECTRICAL CONTRACTOR MC: MECHANICAL CONTRACTOR IT: IT TECHNICIAN
"WORKSTATION"	EQ1	ESPRESSO MACHINE	DBC	GC	3 TOTAL + 1 OPTIONAL	LA MARZOCCO	LINEA 3 GROUP	STAINLESS	220	1 PH	29.3A	208-240V 1 PH.WIRED 10-50P; NEMA 10-50R PLUG - PLUG PROVIDE BY DBC	FILTERED	COLD	MALE COMPRESSION S/O	3/8" MIN.	45	3/4" FLEX DRAIN LINE	INSTALL PLUG END ON CORD & PLUG INTO OUTLET; INSTALL FILTERED COLD WATER LINE WITH BRAIDED FLEX HOSE TO MACHINE; INSTALL FLEXIBLE DRAIN INTO RIGID DRAIN PROVIDED BY PC. THE "MIDDLE TOE" OF THE OUTLET IS TO POINT DOWN.
	EQ2	GRINDER	DBC	GC	6 TOTAL + 2 OPTIONAL	MAZZER	MAJOR	DARK GRAY	120		5.4A	NEMA 5-20	-	-	-	-	-	-	UNBOX, SET ON COUNTER AND PLUG INTO OUTLET
	EQ3	HOT WATER DISPENSER	RES	GC	3 + 1 OPTIONAL	BUNN	43600.0026-H5X	STAINLESS/ BLACK	120V	1 PH	15.4A	NEMA5-20	FILTERED	COLD	MALE	1/4"			
	EQ4	GLASS FILLER	KES	KES	3 + 1 OPTIONAL	FISHER	12513	STAINLESS	-	-	-	-	FILTERED	COLD	MALE	1/2" NPT	60 PSI	-	MOUNT @ RINSE STATION WELL
	EQ5	TRASH CAN	DBC	GC	3 + 1 OPTIONAL	RUBBERMAID	SLIM JIM	BLACK	-	-	-	-	-	-	-	-	-	-	TRASH CAN LOCATED UNDER KNOCK BOX CHUTE FOR COFFEE GROUND.
	EQ6	BLENDER	DBC	GC	4	BLENTEC	STEALTH 885	BLACK	120	-	15A	NEMA 5-20	-	-	-	-	-	-	COUNTER TOP OPTION
	EQ7	FROZEN BEVERAGE MACHINE	DBC	DSL	3	TAYLOR	342	STAINLESS	(2) 208	-	16A	NEMA L-620	-	-	-	-	-	-	TAYLOR TO PROVIDE INSTALL; GC/ EC TO COORDINATE. TWO (2) TWIST LOCK OUTLETS NEED FOR EACH MACHINE
	EQ8	ICE MACHINE	KES	KES	2	MANITOWOC	IYF-2100C	STAINLESS	120	1PH	1.1A	NEMA 5-20	FILTERED	COLD	-	3/8"		3/4"	INSTALLATION BY APPROVED MANITOWOC CONTRACTOR TO BE HIRED BY GC. PLUMBER TO CONNECT BRAIDED WATERLINE AND 3/4" DRAIN OFF OF ICE CUBER AND PIPE DOWN TO FLOOR SINK BELOW ICE BIN. PLUG INTO 120V OUTLET. NOTE: PC AND EC TO PROVIDE ADDITIONAL OUTLET AND WATERLINE STOP FOR FUTURE 2ND ICE MACHINE
	EQ8A	ICE MACHINE COND.	KES	GC/ PC/ EC	2	MANITOWOC	CVDF2100	STAINLESS	208-230/ 60	3PH	30.0A	-	-	-	-	-	-	-	MOUNTED ON ROOF. OPTIONAL 2ND COND. IN CLIMATES 1-4
	EQ8B	ICE MACHINE WATER FILTRATION	DBC	GC/ PC	1	EVERPURE COLDDRINK/ INSURICE TWIN MANIFOLD w/ 20" PREFILTER	EV9293-22	-	-	-	-	-	-	COLD	-	3/4"	-	-	COORD. STUB OUT LOCATION w/ ICE MACHINE; REFERENCE INTERIOR ELEVATIONS
	EQ9	ICE STORAGE BIN	KES	KES	1	FOLLET	DEV1650SG-60-ICS125	STAINLESS/ GRAY	-	-	-	-	-	-	-	-	-	-	PIPE DRAIN INTO NEAREST FLOOR SINK (AT T4, "PIT STATION")
	EQ10	ICE CADDY	KES	KES	5 + 1 OPTIONAL	IRP	ICE CADDY 100	BLACK	-	-	-	-	-	-	-	-	-	-	ICE CADDY SHALL DRAIN TO FLOOR SINK BELOW
	EQ11	27" UNDER COUNTER REFRIGERATOR	KES	KES	1	BEVERAGE-AIR	UCR27HC	STAINLESS	115	1PH	2.0A	NEMA 5-15	-	-	-	-	-	-	FOR TABLES w/ 36" DEPTH. SEE TABLE 5. SPECIFY ON ORDER: 2-3/4" CASTERS, LOW PROFILE IN LIEU OF 6" STANDARD.
	EQ12	CUP DISPENSER	DBC	GC	24	SAN JAMAR	C2410SM	BLACK	-	-	-	-	-	-	-	-	-	-	ATTACH TO BOTTOM OF HANGING SHELVES
	EQ13	CEILING MOUNTED SHELVING (18"x48")	KES	KES	38	ULINE	H-3182BL	BLACK	-	-	-	-	-	-	-	-	-	-	18"X48" SHELVES. GC TO INSTALL TWO CEILING HUNG SHELVES OVER EACH STAINLESS COUNTER PER SHELVING PLAN. ATTACHED UNISTRUT TO ROOF STRUCTURE ABOVE AND HANG ALL-THREAD FROM TOP OF UNISTRUT THROUGH BOTTOM OF SHELVING POST SECURED WITH FENDER WASHERS AND BOLTS. EXTRA ALL THREAD AT BOTTOM OF POST TO BE CUT OFF AND FILED SMOOTH. POST ARE TO BE INSTALLED THROUGH CEILING TILE WITH A MINIMUM OF 1/4" OVERCUT ALLOWED AROUND EACH HOLE
		CEILING MOUNTED POSTS (72")	KES	KES	52	ULINE	H-6797BL	BLACK	-	-	-	-	-	-	-	-	-	-	
		CEILING MOUNTED SHELF LINERS (18"x48")	KES	KES	38	ULINE	H-2435	CLEAR	-	-	-	-	-	-	-	-	-	-	
		CEILING MOUNTED SHELVING DIVIDERS (18"x8")	KES	KES	TBD BY OWNER	ULINE	H-1760BL	BLACK	-	-	-	-	-	-	-	-	-	-	
	EQ13A	STANDING SHELVING (18"x48")	KES	KES	24	ULINE	H-3183BL	BLACK	-	-	-	-	-	-	-	-	-	-	18"X48" STANDING SHELVES. INSTALL CASTERS BELOW STANDING SELVES POST.
		STANDING POSTS (96")	KES	KES	16	ULINE	H-6799BL	BLACK	-	-	-	-	-	-	-	-	-	-	
		STANDING SHELF LINERS (18"x48")	KES	KES	24	ULINE	H-2436	CLEAR	-	-	-	-	-	-	-	-	-	-	
		STANDING SHELF CASTERS	KES	KES	4 SETS	ULINE	H-1205WH	WHITE	-	-	-	-	-	-	-	-	-	-	
	EQ14	WALL MOUNTED DRINK SPEED RAILS	KES	KES	3	SAN JAMAR	B5522	STAINLESS	-	-	-	-	-	-	-	-	-	-	STAINLESS STEEL SPEED RAIL (31-1/8"x4-1/8"x6")
	EQ15	WALK-IN COOLER BOX	KES	GC/ PC/ EC	1	REFRIGERATION CONTRACTORS	CUSTOM	WHITE	-	-	-	-	-	-	-	-	-	-	CUSTOM WALK-IN BOX WITH GLASS DOORS AND ALUMINUM COVE BASE. GC'S REFRIGERATION CONTRACTOR TO SET BOX IN URETHANE SEALANT ON TOP OF QUARRY TILE FLOOR AND INSTALL ALUMINUM COVE BASE AROUND INSIDE AND OUTSIDE PERIMETER OF BOX AT FLOOR. REFRIGERATION SUB ALSO TO INSTALL VERTICAL CLOSURE STRIPS BETWEEN THE WALK-IN COOLER AND THE ADJACENT WALLS *AND* BETWEEN WALK-IN COOLER CEILING AND BUILDING WALLS IF REQUIRED BY LOCAL HEALTH DEPARTMENT. PROVIDE WALK-IN COOLER (ANTHONY DOORS) DOOR CIRCUIT.
	EQ15A	WALK-IN COOLER COND.	KES	GC/ PC/ EC	1	HEATCRAFT	MOZ015M63	GRAY	208/230	3PH	RLA-8.7A LRA-58A	-	-	-	-	-	-	-	INSTALLED ON ROOF.
	EQ15B	WALK-IN COOLER EVAP. COIL	KES	GC/ PC/ EC	1	HEATCRAFT	ULA132	GRAY	115	1PH	3.6A	-	-	-	-	-	-	-	INSTALLED IN WALK-IN COOLER; VERIFY W/ OWNER
	EQ15C	WALK-IN COOLER SHELVING	KES	GC	3 SETS	ANTHONY	-	-	-	-	-	-	-	-	-	-	-	-	REFERENCE ENLARGED COOLER PLAN
	EQ16	SERVICE WINDOW TRAY	KES	KES	2	CUSTOM	CUSTOM	14 GA STAINLESS	-	-	-	-	-	-	-	-	-	-	14 ga.; 48"x18"x10"
"HOUSE"	EQ20	"OPEN" SIGN	DBC	GC	3	ES&A CO.	TBD	PER MFR.	-	-	-	-	-	-	-	-	-	-	CENTER ON WINDOWS, ON SWITCHED OUTLET, REFERENCE ELEVATIONS
	EQ21	MENU BOARDS	DBC	GC	4	ES&A CO.	TBD	PER MFR.	120	1PH	20A	-	-	-	-	-	-	-	COORD. W/ ARCHITECTURAL ELEVATIONS
	EQ21A	"GOODIES" MENU	DBC	GC	2	TBD	TBD	PER MFR.	-	-	-	-	-	-	-	-	-	-	COORD. W/ ARCHITECTURAL ELEVATIONS
	EQ21B	NON-LIT SNAP MENU FRAMES	DBC	GC	2	ES&A	TBD	PER MFR.	-	-	-	-	-	-	-	-	-	-	COORD. W/ ARCHITECTURAL ELEVATIONS
	EQ22	BOLLARD COVER	DBC	GC	2	IDEAL SHIELD	7" COVER	BLUE W/ LOGO	-	-	-	-	-	-	-	-	-	-	
	EQ23	42" WALL MOUNTED AIR CURTAIN	GC	GC	1	QUIKSERV	SANITATION CERTIFIED LOW PROFILE 7 - 42"	WHITE	120/1/60	1PH	3.4A	-	-	-	-	-	-	-	QUIKSERV AIR CURTAIN, 42", MOUNT 2" ABOVE DOOR FRAME
	EQ23A	48" WALL MOUNTED AIR CURTAIN	GC	GC	1	QUIKSERV	SANITATION CERTIFIED LOW PROFILE 7 - 48"	WHITE	120/1/60	1PH	3.4A	-	-	-	-	-	-	-	QUIKSERV AIR CURTAIN, 48", MOUNT 2" ABOVE DOOR FRAME
	EQ24	25" AIR CURTAIN - SERVICE WINDOW	GC	GC	2	QUIKSERV	QSK1025AA-BK	BLACK	120	1PH	3.4A	-	-	-	-	-	-	-	QUIKSERV AIR CURTAIN, 25" MOUNT DIRECTLY ABOVE SERVICE WINDOW PER MRF. RECOMMENDATIONS
	EQ25	SAFE	KES	KES	1	AMSEC	DSF2014-ESL10	BLACK	-	-	-	-	-	-	-	-	-	-	BOLT TO FLOOR BELOW MANAGER DESK
	EQ26	MANAGERS DESK	KES	KES	1	CUSTOM	CUSTOM	14 GA STAINLESS	-	-	-	-	-	-	-	-	-	-	WALL MOUNTED SHELF (36"x21") OUTSIDE OF RESTROOM DOOR AT 34" AFF
	EQ27	EMPLOYEE LOCKERS	KES	KES	2	ULINE	H-6735AGR (12x12x72")	GRAY	-	-	-	-	-	-	-	-	-	-	
	EQ28	FIRE EXTINGUISHER	GC	GC	1	ULINE	S-9873	RED	-	-	-	-	-	-	-	-	-	-	UL RATING 2A:10B:C
	EQ29	FIXED ROOF ACCESS LADDER	GC	GC	1	TRI-ARC	WLFS0108	GRAY	-	-	-	-	-	-	-	-	-	-	60", BULK HEAD TO ROOF ONLY
	EQ30	LADDER SAFETY POST	GC	GC	1	BILCO	LU-1	YELLOW	-	-	-	-	-	-	-	-	-	-	YELLOW POWDER COATED STEEL LADDER SAFETY POST
	EQ31	ROOF HATCH	GC	GC	1	BILCO	SINGLE LEAF SCUTTLE TYPE S-20	RED OXIDE PRIME FINISH	-	-	-	-	-	-	-	-	-	-	ROOF HATCH 3'-0"X2'-6" - PRE-ASSEMBLED SINGLE LEAF INSULATED PAINT BOND ROOF SCUTTLE EQUAL TO BILCO TYPE S ROOF HATCH PROVIDE INTERIOR PADLOCK GIVE KEYS TO CONSTRUCTION PROJECT MANAGER
	EQ32	ATTIC ACCESS PANEL	GC	GC	1	BEST ACCESS DOORS	BA-CTR-22x30	WHITE	-	-	-	-	-	-	-	-	-	-	ACCESS DOOR W/ HIDDEN FLANGE FOR ALL SURFACE TYPES; PROVIDE KEYED LATCH
	EQ33	KEY LOCK BOX	GC	GC	1	KNOX	KNOXBOX 3200	BLACK	-	-	-	-	-	-	-	-	-	-	SURFACE MOUNTED AT 72" A.F.F. AT REAR DOOR
	EQ34	"HUG" FREEZER	KES	KES	1	BEVERAGE-AIR	NC34HC-1	WHITE	115	1PH	3.0A	NEMA 5-15	-	-	-	-	-	-	FREEZER FOR "HUG" VESTS; TO BE INCLUDED IN CLIMATE ZONES 1-5
	EQ35	TRASH ENCLOSURE SECURITY CAGE	GC	GC	1	ULINE	CUSTOM	PER MFR.	-	-	--	-	-	-	-	-	-	-	4'x8'x8' w/ HINGED DOOR; REFERENCED SHEET A9.0

DUTCH BROS

CORALIC ARCHITECTURE

ARCHITECT
CORALIC, LLC
EDIN CORALIC
9700 MACKENZIE ROAD, STE. 222,
ST. LOUIS, MO 63123
p: 314.578.4953
e: edin@coralicarchitecture.com

STRUCTURAL ENGINEER
JAMES C. KREHER
JIM KREHER
208 N. MAIN STREET,
COLUMBIA, IL 62236
p: 618.281.8505
jimk@kreherengineering.com

MEP ENGINEER
Case Engineering
DARRELL R. CASE
796 MERUS CT.,
FENTON, MO 63026
T. 636.349.1600 F. 636.349.1730
dcase@caseengineeringinc.com

EDIN CORALIC ARCHITECT
A-2013031004 - EXP. 12-31-2021

STATE OF MISSOURI
EDIN CORALIC
NUMBER A-2013031004
ARCHITECT
10.11.2021

MISSOURI CERTIFICATE OF AUTHORITY NO. 2013041393

Project No: MO0102

Dutch Bros Coffee - New Freestanding Store

500 NW Chipman Road, Lee's Summit, Missouri 64086
for: Dutch Bros Coffee
110 SW 4th St.
Grants Pass, OR 97526

ISSUED FOR PERMIT:
10.11.2021

REV:	DATE:	DESCRIPTION:

SHEET NAME:

EQUIPMENT SCHEDULE

SHEET NUMBER:

A1.1

© 2020 DB Franchising USA, LLC

IT SCHEDULE

ID TAG	DESCRIPTION	MANUFACTURER	MODEL	QTY	REMARKS
IT-1	LOW VOLTAGE RACK	STRONG	SR-WMS-12U	1	PROVIDE BLOCKING & MOUNT TOP OF UNIT 3" BELOW SUSP. CEILING; REQUIRES TECH RACK FAN KIT
	TECH RACK FAN KIT	-	-	1	-
	BACK-UP BATTERY	APC	SC 450VA	1	PLACED INSIDE THE LOW VOLTAGE RACK
	RACK SHELF	PANDUIT	-	2	-
	SURGE PROTECTOR	WATTBOX	LIGHTED SURGE PROTECTOR	1	-
IT-2	AUDIO EQUIPMENT	TBD	TBD	-	LOCATED IN LOW VOLTAGE RACK
IT-3	IT EQUIPMENT	TBD	TBD	-	LOCATED IN LOW VOLTAGE RACK
IT-4	AMP	SONOS	TBD	2	(1) AMP FOR INTERIOR SPEAKERS; (1) AMP FOR EXTERIOR SPEAKERS
IT-5	SPEAKER - CEILING MOUNTED	SONOS	IN-CEILING BY SONANCE	2	SEE PLAN FOR LOCATION
IT-6	SPEAKER - EXTERIOR MOUNTED	SONOS	OUTDOOR BY SONANCE	2	SEE PLAN FOR LOCATION
IT-7	NOT USED	-	-	-	-
IT-8	IPAD 10.2"	APPLE	IPAD 10.2"	5	IPAD 10.2" REQUIRE SCREEN PROTECTOR (2/PK)
IT-8A	IPAD MINI	APPLE	IPAD MINI	11	-
IT-8B	IPOD TOUCH	APPLE	IPOD TOUCH	1	REQUIRES OTTERBOX CASE
IT-9	IPAD ADJUSTABLE ARM WALL MOUNT	THE JOY FACTORY	-	5	-
IT-9A	IPAD CLAMP MOUNT	THE JOY FACTORY	-	2	-
IT-9B	IPAD MAGNETIC MOUNT	THE JOY FACTORY	-	3	-
IT-10	IPAD TABLET MOUNT	MAGCONNECT	UNIVERSAL TABLET MODULE	5	-
IT-11	IPAD CHARGING CABINET	LUXOR 8	TABLET WALL/ DESK CHARGING STATION	1	8 OUTLET HORIZONTAL POWER CHARGING STRIP W/ PADDED INTERIOR AND RUBBER-COATED DIVIDERS AND 10' CORD
IT-12	3.5MM TO 2-MALE RCA ADAPTER	-	-	1	-
IT-13	POS SYSTEM	-	-	1	-
IT-14	CASH DRAWER PRINTER CABLE	APG	-	2	-
IT-15	5' CAT-5E CABLE	-	-	1	-
IT-16	PAYPAL READER BUNDLE	-	-	6	PAYPAL READER BUNDLE - CHIP & TAP W/ CHARGING STATION
IT-17	SECURITY MONITOR	TBD	TBD	1	VERIFY LOCATION W/ DBC

TABLE SCHEDULE - DB2550-A1

ID TAG:	DESCRIPTION:	PROVIDED:	INSTALLED:	MFR:	MODEL:	REMARKS:
T1	106"Wx36"Lx34"H	KES	KES	AIS INDUSTRIES	CUSTOM/ 14 ga. STAINLESS STEEL	WALK-UP WINDOW TABLE; CASH DRAWER ON LEFT SIDE; SECURE TO WALL & SEAL W/ GRAY SILICONE. RAPID RINSE STATION SINK, KNOCK BOX & DIPPER WELL BUILT-IN.
T2	106"Wx36"Lx34"H	KES	KES	AIS INDUSTRIES	CUSTOM/ 14 ga. STAINLESS STEEL	DRIVE-THRU WINDOW TABLE; CASH DRAWER ON RIGHT SIDE; SECURE TO WALL & SEAL W/ GRAY SILICONE. RAPID RISE STATION SINK, KNOCK BOX & DIPPER WELL BUILT-IN.
T3	103"Wx32"Lx34"H	KES	KES	AIS INDUSTRIES	CUSTOM/ 14 ga. STAINLESS STEEL	WALK-UP WINDOW TABLE; NO CASH DRAWER; SECURE TO WALL & SEAL W/ GRAY SILICONE. RAPID RINSE STATION SINK, KNOCK BOX & DIPPER WELL BUILT-IN.
T4	96"Wx32"Lx34"H	KES	KES	AIS INDUSTRIES	CUSTOM/ 14 ga. STAINLESS STEEL	"PIT STATION" TABLE; SECURE TO WALL & SEAL W/ GRAY SILICONE. (2) 19"x14"x5" DRAIN PANS, 10"x18"x4" RAPID RINSE SINK & DIPPER WELL BUILT-IN.
T5	103"Wx36"Lx34"H	KES	KES	AIS INDUSTRIES	CUSTOM/ 14 ga. STAINLESS STEEL	"TRAINING TABLE", NO CASH DRAWER; SECURE TO WALL & SEAL W/ GRAY SILICONE. RAPID RINSE STATION SINK, KNOCK BOX & DIPPER WELL BUILT-IN.
TABLE ACCESSORIES						
TA-10	CASH DRAWER	KES	KES	APG	VB320-BL1616	PROVIDE APG, VPK-27B16-BX
TA-11	KNOCK BOX	KES	KES	AIS INDUSTRIES	CUSTOM	14 ga., STAINLESS, BUILT INTO STAINLESS STEEL TABLE. KNOCK BOX CROSS BAR - 7/16" DIA. THROUGH BOLT w/ NYLOCK WINGNUT BAR 5/14"x1-1/2" RUBBER INSERT ROUND. PROVIDE EQ5 BELOW

LIGHTING SCHEDULE

CONTRACTOR TO PROVIDE UNLESS NOTED OTHERWISE

SUBSTITUTIONS ARE NOT ALLOWED AND VALUE ENGINEERING WILL NOT BE CONSIDERED. NO EXCEPTIONS

ID TAG	FIXTURE DESCRIPTION	MFR	MODEL	REMARKS
L2	GRID LED, 2' x 2', ACRYLIC LENS	EIKO	SLM22-4CB-40K-U MV, 0-10V DIM	2x2 FLAT PANEL, LAYIN GRID CEILING, FROSTED LENS, LED 30W, 3750LM, 4000K, 0-10V DIM
L2E	GRID LED, 2' x 2', ACRYLIC LENS	EIKO	SLM22-4CB-40K-U-EM MV, 0-10V DIM	2x2 FLAT PANEL, LAYIN GRID CEILING, FROSTED LENS, LED 30W, 3750LM, 4000K, 0-10V DIM, W/ 10.7W EMERGENCY BATTERY PACK
L3	LED ROUND @ RESTROOM & MECH. ROOM	MAXIM	57736WTWT - 36W/ LED/ 15" RND/ FLUSH/ 3000K/ MV, 120V, ELV DIMMABLE	15" DIA SURFACE J-BOX MOUNTED LED MILK-WHITE DIFFUSER, ROUND WHITE TRIM, 36W, 2200LM, 3000K, ELV DIMMABLE
L4	EXTERIOR SCONCE W/ BLUE FILTER	LIGMAN	UMT-31416-DBNA / 14/14W-N-W40-02-120/227V	14/14W; NARROW BEAM; 40W, 4000K, DARK GRAY, 120/227V; TO BE USED AT CANOPY COLUMNS ONLY W/ BLUE FILTER. VERIFY BEAM DIRECTIONS W/ OWNER. BOT. OF FIXTURE AT 8'-0" A.F.F.
L5	LED STRIP LIGHTING @ PARAPET 2	LEKTRON	LASER, 120-277 VAC, 24 VDC (PHILLIPS ADVANCE), 1.50W/ FT., DIMMABLE	BLUE LED STRIP LIGHTING AT PERIMETER OF PARAPET 2, REMOTE DRIVER INDOOR/ OUTDOOR RATED; LOCATE INSIDE OF BUILDING IN ACCESSIBLE LOCATION. USE TRANSFORMER SIZES PER RUNS/ WIRING GROUPS. MAX. RUN LENGTH IS 48'-0"
L6	WALL PACK	RAB	WPLED-26-Y-/ESP, MV, NON-DIM	EXTERIOR DECORATIVE WALLPACK. APPROX. 26W,3300LM, 3000K, W/ EMERGENCY BACK UP; NO MOTION SENSOR OR PHOTOCELL
L7	LED STRIP LIGHTING @ AWNINGS	SELF ELECTRONICS	CROWN-7040K110-S-SSP MV, 0-10V, DIM	6' WET LOCATION LINKABLE CUSTOM BATTEN STRIP, LED, HIGH-OUTPUT, 60W, 6300LM, 4000K, INTEGRAL DRIVER, AWNING MOUNTED AT 10'-6"; 1 ROW PER AWNING, ANGLED TO WASH WALL
L8	LIGHT FIXTURE @ ELECTRICAL ROOM	NUVO	65-224, 20W, 100-277V, 5000K, NOM-DIM	WALL MOUNTED VAPOR PROOF FIXTURE, W/ GUARD; GRAY, LED, 1800LM, 5000K, WET LOCATION LISTED
L9	FRAMED CANOPY SOFFIT LIGHTS	DMF	DRD5S-4-R-07-9-30 / DRDH-N-JO-KH MV, 120V, NON DIM	USED ONLY FOR APPLICATIONS REQUIRING SURFACE CEILING MOUNTED LIGHTS. RECESSED OCTAGANAL 2" HT. J-BOX HOUSING W/ SURFACE DOWNLIGHT; 4.75" DIAMETER, 9/16" DEEP, WHITE, LED, 750LM, 3000K, WET LISTED
L9E	FRAMED CANOPY SOFFIT LIGHTS W/ EM PACK	DMF	DRD5S-4-R-07-9-30 / DRDH-N-JO-KH MV, 120V, NON DIM W/ EM PACK	USED ONLY FOR APPLICATIONS REQUIRING SURFACE CEILING MOUNTED LIGHTS. RECESSED OCTAGANAL 2" HT. J-BOX HOUSING W/ SURFACE DOWNLIGHT; 4.75" DIAMETER, 9/16" DEEP, WHITE, LED, 750LM, 3000K, WET LISTED; W/ REMOTE EM PACK AND REMOTE EM TEST BUTTON. USED FOR EXTERIOR EM CANOPY USE
P	POLE LIGHTING - SINGLE	NLS	NV-1-T4-64LSP-1-40K-UNV-ASA-BRZ OR T4-48, IF 156W NEEDED. ADD "FSIR-100" FOR CALIFORNIA (<24') OR WHERE MOTION SENSORS REQUIRED PER CODE OR SIMPLY DESIRED. ADD HSS IF HOUSE SIDE SHIELD IS REQUIRED. POLE IS NLS SSP17-4S-11G-9BC-SGL-BRZ-34 30-CL, MV	SITE POLE HEAD, LED, 205W, 23000LM. (OR 156W, 19000LM, IF LOWER WATTAGE REQUIRED), 4000K, DARK BRONZE, TYPE IV DISTRIBUTION, W/ 17'-6" POLE (VERIFY FOR EACH SITE), 4" SQUARE STRAIGHT 11GA STEEL, INCLUDES ANCHOR BOLTS, DARK BRONZE, BOLTS 12" BOLT CIRCLE 3/4" DIA. x 30" LONG. VERIFY PER LOCAL REQUIREMENTS PRIOR TO ORDERING - POLE LENGTH, WATTAGE/LUMENS, KELVIN LIGHT TEMPERATURE, TYPE DISTRIBUTION, MOUNTING CONFIGURATION - SINGLE/DOUBLE AND COLOR. HEAD BRACKET HOLES ARE FACTORY PRE-DRILLED GIVEN AVAILABLE LEAD TIME, CUT AND DRILL IN FIELD IF REQUIRE SHORTENED. VERIFY HEIGHT AND COLOR WHEN ORDERING
P2	POLE LIGHTING - DOUBLE	NLS	SAME AS TYPE P - 2 HEADS @ 180°	
P4	POLE LIGHTING - QUAD	NLS	SAME AS TYPE P - 4 HEADS @ 90°	
X	EXIT SIGN	BEST	EZXTEU2RWEM MV, NON DIM, 4W	EXIT, SELF POWERED, SINGLE/DOUBLE FACE, UNIVERSAL MOUNT, LED, RED ON WHITE, VERIFY COLORS
EXM	EXIT SIGN W/ HEADS	BEST	CXTEU-2-R-W MV, NON DIM, 12W (NOT USED ON EVERY LOCATION)	UNIVERSAL, SELF-POWERED, WHITE EXIT, RED ON WHITE/ EM COMBO W/ (2) 5.4W HEADS
EM	EMERGENCY LIGHT	BEST	LEDRX-5HL MV, NON DIM, 4W	EMERGENCY LIGHT, WHITE, BRIGHT (2) 1.7 W LED
CL	COOLER LIGHT	BY OTHERS	-	TWO COOLER LIGHTS ARE SUPPLIED AND PROVIDED BY THE COOLER MANUFACTURER- E.C. TO PROVIDE FINAL CONNECTION/ WIRING.
CONT	SUPPLIED BY EC	-	-	CONTROLS. PANEL BASED CIRCUITING WITH TIMER CONTROL, PC CONTROL AND SENSORS WHERE REQUIRED BY CODE

PURCHASING: THE ABOVE LIGHTING MATERIAL IS TO BE PURCHASED AS A "LIGHTING PACKAGE" FROM DUTCH BROS COFFEE'S NATIONAL ACCOUNTS FROM THE REQUIRED LIGHTING VENDORS LISTED BELOW; MADE AVAILABLE TO FRANCHISEES AND THEIR CONTRACTORS AT ESTABLISHED DISCOUNTED PRICING, USED FROM NEGOTIATED STOCK INVENTORIED PRODUCT COMMITTED TO, AND OBLIGATED FOR USE BY DUTCH BROS COFFEE. FOR QUOTATION, ORDER PLACEMENT AND DELIVERY. IF ANYTHING OTHER THAT ABOVE IS INSTALLED WITHOUT EXPRESSED WRITTEN CONSENT BY DUTCH BROS COFFEE CORPORATE OFFICE AND THE FRANCHISEE, CONTRACTOR WILL BE REQUIRED TO REMOVE IT AND REPLACE IT WITH THE ABOVE.

REQUIRED LIGHTING VENDORS:

- IMPERIAL LIGHTING - KURT TOMASOVICH - 760-636-0762 - KURT@IMPERIAL-LIGHTING.COM

- GRAYBAR - DAVID (DAVE) ARINGTON - 817-213-0850 - DAVE.ARINGTON@GRAYBAR.COM

- VILLA LIGHTING SUPPLY - NICK BECKER - 314-478-3141 - NICK.BECKER@VILLALIGHTING.COM

PLUMBING SCHEDULE

CONTRACTOR TO PROVIDE UNLESS NOTED OTHERWISE

	ID TAG	FIXTURE DESCRIPTION	MANUFACTURER	MODEL	REMARKS
RESTROOM	P-1	LAVATORY TOILET	KOHLER	K-3619 CIMARRON	COLOR: WHTE, NOTE: FLUSH CONTROLS LOCATED ON OPEN SIDE OF W.C.
	P-2	LAVATORY SINK	KOHLER	K-2030	INSTALL WITH ACCESSORIES TO MEET ADA REQUIREMENTS
		LAVATORY SINK FAUCET	DELTA	501LF-HGMHDF	
"WORKSTATION"	P-3	WATER FILTRATION SYSTEM	HEATHCO/ EVERPURE	LOCATION SPECIFIC	CONTACT TOM RUGGLES 714.910.9805 FOR PROJECT SPECIFIC WATER FILTRATION SYSTEM.
	P-4	DIPPER WELL	FISHER	3041	PROVIDED & INSTALLED BY KES; INSTALLED IN STAINLESS STEEL TABLE; PROVIDE NON-FILTERED COLD WATER, DRAIN LINE TO FLOOR SINK BELOW
	P-5	RAPID RINSE STATION	BLENDTEC	JRE-610	PROVIDED & INSTALLED BY KES; PROVIDE NON-FILTERED COLD WATER;. IN STAINLESS STEEL TABLE DUMP SINK. GRAINGER 3MRL4 RUBBER GROMMET FOR RINSER SUPPLY LINE.
	P-6	WATER HEATER - TANK	A.O. SMITH	DEN-52	ELECTRIC - HIGH RECOVERY RATE
	P-7	HAND SINK	BK RESOURCES	BKHS-D-SS-SS	PROVIDED & INSTALLED BY KES; PROVIDED W/ SPLASH GUARDS BOTH SIDES; PROVIDE NON-FILTERED WATER CONNECTIONS
		HAND SINK FAUCET	FISHER	53872	
	P-8	3-COMP SINK	BK RESOURCES	BKS-3-1416-12-12TS	PROVIDED & INSTALLED BY KES; 1.5" DRAIN; TIE ALL DRAINS TOGETHER AND ROUTE TO NEAREST FLOOR SINK. LEVEL FRONT TO BACK AND SIDE TO SIDE AND CAULK TO WALL WITH CLEAR SILICONE; PROVIDE STRAINERS AND NON-FILTERED WATER CONNECTIONS
		3-COMP SINK FAUCET	FISHER	34371	
		LEVER WASTE DRAIN	FISHER	24090	
	P-9	PULL-OUT SPRAYER HANDLE	T&S	MPZ-4DLN-06	PROVIDED & INSTALLED BY KES; ON STAINLESS STEEL TABLE @ DUMP SINK; 8" RISER & 6" SWING SPOUT; PROVIDE NON-FILTERED WATER CONNECTIONS
	P-10	MOP SINK	ZURN	Z1996-24	COLOR: WHITE 10" WALLS, 3" DRAIN. MOP HANGER ABOVE.
		MOP SINK FAUCET	FIAT	830-AA	SERVICE FAUCET WITH VACUUM BREAKER, INTEGRAL STOPS AND HOSE WITH HOSE BRACKET
		MOP HANGER	ULINE	H-2841	MOUNT AT 60" A.F.F., AT SIDE OF MOP SINK
	P-11	FLOOR SINK	ZURN (BASIS OF DESIGN)	Z1900	12"x12"x6" DEEP SQUARE,CAST IRON BODY, WHITE ACID RESISTING PORCELAIN ENAMEL INTERIOR AND TOP W/ BASKET STRAINERS & HALF-GRATES
	P-12	FLOOR DRAIN	ZURN (BASIS OF DESIGN)	EZ-5	5" ROUND FLOOR DRAIN
	P-13	GREASE INTERCEPTOR	SCHIER (BASIS OF DESIGN)	GB-50	50 GPM, BELOW-GRADE AT EXTERIOR, VENTED THROUGH BUILDING, PROVIDE HI TRAFFIC COVER AND ACCESS. FINAL SIZE TO BE COORDINATED WITH LOCAL AUTHORITY
	P-14	ROOF DRAIN	ZURN (BASIS OF DESIGN)	Z165	COMBINATION MAIN AND OVERFLOW ROOF DRAIN.
		DOWNSPOUT NOZZLE	ZURN (BASIS OF DESIGN)	Z199	NO-HUB DOWNSPOUT NOZZLE, 18" A.F.F., NICKEL BRONZE BODY
	P-15	WALL HYDRANT	WATTS	HY-420	6" NON-FREEZE WALL HYDRANT, MOUNT AT 24" A.F.F AT REAR ELEVATION.
	P-16	YARD HYDRANT	WATTS	HY-800	FROST PROOF, 2FT. BURY DEPTH
	P-17	RECIRCULATION PUMP	TACO	0010	115V, 3,250 RPM, PROVIDE W/ AQUATSTAT AND/ OR TIMER
	P-18	BOOSTER PUMP	AQUAVAR	1151AB25HM03	115V, 30 GPM @ 35 PSI BOOST, 1 HP VARIABLE SPEED CONTROLLER; PROVIDE ALL NECESSARY VALVES AND ACCESSORIES RECOMMENDED BY MFR. FOR A COMPLETE SYSTEM.
	P-19	BACKFLOW PREVENTER	WATTS	LF009	MOUNT ABOVE MOP SINK; ROUTE RELIEF PIPES TO DISCHARGE INDIRECTLY TO MOP SINK
	RESTROOM ACCESSORIES				
	PA-51	ADA GRAB BAR	BOBRICK	B-5806	SIZE DEPENDANT ON INSTALLION LOCATION
	PA-52	MIRROR	BOBRICK	B-165-1836	MOUNTED W/ BOTTOM OF REFLECTIVE SURFACE AT 40" MAX A.F.F.
	PA-61	SOAP DISPENSER	TORK	466100	PROVIDED & INSTALLED BY G.C.
	PA-62	TOILET PAPER DISPENSER	TORK	59TR	PROVIDED & INSTALLED BY G.C.
	PA-63	PAPER TOWEL DISPENSER	TORK	461002	PROVIDED & INSTALLED BY G.C.
	PA-64	SANITARY NAPKIN DISPOSAL	BOBRICK	B-254	PROVIDED & INSTALLED BY G.C.
	PA-65	TOILET SEAT COVER DISPENSER	BOBRICK	B-221	PROVIDED & INSTALLED BY G.C.

ARCHITECT
CORALIC, LLC
EDIN CORALIC
9700 MACKENZIE ROAD, STE. 222,
ST. LOUIS, MO 63123
p: 314.578.4953
e: edin@coralicarchitecture.com

STRUCTURAL ENGINEER
JAMES C. KREHER
JIM KREHER
208 N. MAIN STREET,
COLUMBIA, IL 62236
p: 618.281.8505
jimk@kreherengineering.com

MEP ENGINEER
Case Engineering
DARRELL R. CASE
796 MERUS CT.,
FENTON, MO 63026
T. 636.349.1600 F. 636.349.1730
dcase@caseengineeringinc.com

EDIN CORALIC ARCHITECT
A-2013031004 - EXP. 12-31-2021

STATE OF MISSOURI
EDIN CORALIC
NUMBER A-2013031004
ARCHITECT
10.11.2021

MISSOURI CERTIFICATE OF AUTHORITY NO. 2013041393

Project No: MO0102

Dutch Bros Coffee - New Freestanding Store

500 NW Chipman Road. Lee's Summit, Missouri 64086
for: Dutch Bros Coffee
110 SW 4th St.
Grants Pass, OR 97526

ISSUED FOR PERMIT:
10.11.2021

REV:	DATE:	DESCRIPTION:

SHEET NAME:

IT/ LIGHTING/ PLUMBING/ TABLE SCHEDULES

SHEET NUMBER:

A1.2

© 2020 DB Franchising USA, LLC

WINDOW SCHEDULE

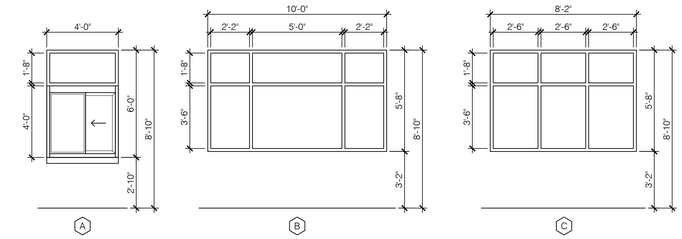

NOTES:

- U-FACTOR - FIXED: 0.38
- U-FACTOR - OPERABLE: 0.48
- STOREFRONT SYSTEMS SHALL HAVE A CLEAR ANODIZED ALUMINUM FACTORY FINISH
- PROVIDE IMPACT GLASS (HURRICANE GLASS OR SIM.), SEE SPECS.

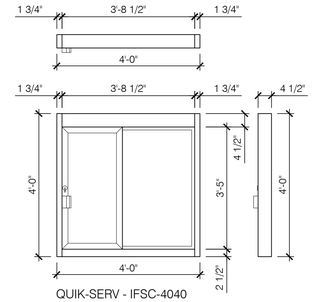

QUIK-SERV - IFSC-4040
(LEFT & RIGHT - FULLY AUTOMATIC)
NOTES:
- ROUGH OPENING: 48-3/8"(W) x 48-3/8"(H)
- ACTUAL DIMENSIONS: 48"(W) x 48"(H)
- SERVICE OPENING: 20-1/4"(W) x 41"(H)

DOOR NOTES

1. THIS PLAN IS ISSUED SO THAT THE CONTRACTOR CAN MAINTAIN FULL COMPLIANCE WITH THE INTERNATIONAL BUILDING CODE FOR WHEELCHAIR MANEUVERABILITY AT DOORS. THIS DETAIL INDICATES PARTIAL REQUIREMENTS OF THE CODE. IT IS ADVISED THAT THE CONTRACTOR OBTAIN A COMPLETE COPY OF THESE CODES FOR REFERENCE.
2. THE DIMENSIONS SHOWN ARE CRITICAL FOR COMPLIANCE WITH THE CODES. IT IS THE CONTRACTOR'S RESPONSIBILITY TO INSURE PROPER CLEARANCES FOR WHEELCHAIR MANEUVERABILITY. IF CONFLICTS OCCUR, BRING TO DESIGNERS ATTENTION IMMEDIATELY.
3. FOR FULL SWING DOORS A MINIMUM 2'-10" WIDE DOOR IS REQUIRED FOR CLEARANCE. FOR 90° SWING DOORS A MINIMUM 3'-0" WIDE DOOR IS REQUIRED FOR CLEARANCE.
4. IN ORDER TO ACHIEVE THE REQUIRED 12" OR 18" MINIMUM CLEARANCES AT DOOR AND A MINIMUM PASSAGE WIDTH, THE DOOR FRAME AT HINGE SIDE MAY HAVE TO BE AGAINST THE ADJACENT WALL.
5. THE MAXIMUM EFFORT FOR BOTH INTERIOR AND EXTERIOR DOORS IS 5 LBS. CLOSING SPEED IS 5 SEC MIN. FROM 90° TO 12°.
6. 1/2" MAXIMUM HIGH THRESHOLD (ABOVE FLOOR AND LANDING ON BOTH SIDES) AT BUILDING ENTRANCES AND ALL DOORS.
7. DOOR HARDWARE AT ALL EXIT DOORS TO ALLOW DOORS TO BE OPENED FROM THE INSIDE WITHOUT KEY, SPECIAL KNOWLEDGE OR EFFORT PER APPROPRIATE CODE.
8. SIGNAGE FOR ONLY MAIN ENTRY DOORS ALLOWED TO HAVE KEY LOCKING DEVICES TO STATE, "*THIS DOOR TO REMAIN UNLOCKED WHEN BUILDING IS OCCUPIED*"
9. 10" HIGH KICK PLATE AT BOTTOM OF GLAZED AND STOREFRONT DOORS.
10. ALL DOORS EQUIPPED WITH SINGLE-EFFORT, NON-GRASPING TYPE HARDWARE BETWEEN 34" MIN. AND 44" MAX. ABOVE THE FINISHED FLOOR.
11. WIDTH OF DOORS TO BE A MINIMUM OF 36" TO PROVIDE REQUIRED 32" NET CLEARANCE WIDTH BETWEEN THE FACE OF THE DOOR AND THE JAMB
12. ALL DOORS TO BE KEYED ALIKE; GC TO PROVIDE A TOTAL OF 6 KEYS.

DOOR SCHEDULE

#	SIZE		TYPE		GLASS	MATERIAL		HARDWARE	NOTES:
	WIDTH	HEIGHT	DR.	FR.		DR.	FR.		
01	3'-6"	7'-0"	A	1	TEMP.	HM	HMD	GROUP 1	A,B,C,D,E,F
02	3'-0"	7'-0"	B	2	TEMP.	HM	HMD	GROUP 2	A,B,C,D,E,F
03	3'-0"	7'-0"	C	2	-	HM	HMD	GROUP 3	B,D,F
04	3'-6"	7'-0"	D	1	-	HM	HMD	GROUP 4	B
05	3'-0"	7'-0"	E	1	-	HM	HMD	GROUP 5	B
06	3'-0"	3'-0"	F	3	-	HM	HMD	GROUP 6	B

NOTES:

HM: HOLLOW METAL, 16 GA.

HMD: HOLLOW METAL WELDED & DIMPLED

A	ENSURE EMERGENCY HARDWARE IS IN WORKING CONDITION.
B	DOOR & FRAME SHALL BE PAINT GRADE & PAINTED PT-2
C	DOOR TO HAVE SIGN POSTED ABOVE THAT STATES: "THIS DOOR TO REMAIN UNLOCKED WHILE BUILDING IS OCCUPIED."
D	CLOSER SHALL BE BOLTED THROUGH DOOR LEAF & ARM MOUNTED USING HEAD-JAMB MOUNT.
E	PROVIDE ADA COMPLIANT THRESHOLD SET IN SILICONE SEALANT.
F	THE MAX PULL/ PUSH EFFORT TO OPERATE DOORS SHALL NOT EXCEED 5 LBS. W/ EFFORT APPLIED TO RIGHT ANGLES TO HINGED DOORS.

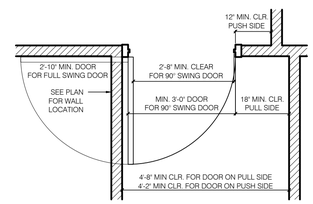

DOOR TYPE SCHEDULE

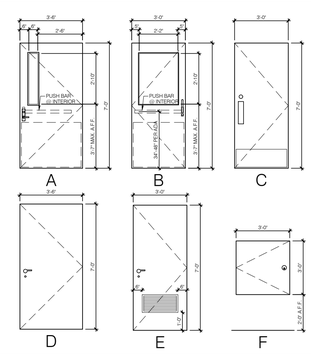

NOTES:

1	REFERENCE DOOR SCHEDULE FOR SIZES AND MATERIALS (TYP.)
2	DOOR HARDWARE, CLOSERS, KICKPLATES, PANIC HARDWARE AND THRESHOLDS SHALL BE LOCATED AND INSTALLED PER ACCESSIBILITY AND LOCAL REQUIREMENTS.

DOOR FRAME TYPE SCHEDULE

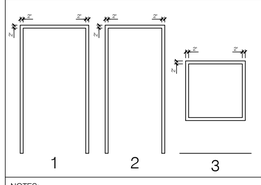

NOTES:

1	REFERENCE DOOR SCHEDULE FOR SIZES AND MATERIALS (TYP.)

NOTE: HAND-ACTIVATED DOOR-OPENING HARDWARE SHALL BE LOCATED 30 MIN. AND 44 MAX. INCHES ABOVE THE FLOOR. LATCHING AND LOCKING DOORS THAT ARE HAND-ACTIVATED AND WHICH ARE IN A PATH OF TRAVEL SHALL BE OPERABLE WITH A SINGLE EFFORT BY LEVER-TYPE HARDWARE, PANIC BARS, PUSH-PULL ACTIVATING BARS, OR OTHER HARDWARE DESIGNED TO PROVIDE PASSAGE WITHOUT REQUIRING THE ABILITY TO GRASP THE OPENING HARDWARE.

HARDWARE GROUPS:

GROUP 1:
1 EA. HINGE - MARKAR, FM300, 84"
1 EA. LOCKSET - TRILOGY, T2 ETDL2700, WATERPROOF, US26D
1 EA. PANIC PUSH HARDWARE - VON DUPRIN 99, 626
1 EA. DOOR CLOSER - SARGENT 1431 RUO EN, US26D
1 EA. THRESHOLD - PEMKO 2716A
1 EA. DOOR SHOE - PEMKO 211APK
1 EA. DOOR SEAL - PEMKO AM888L
1 EA. FLOOR STOP & HOLDER - IVES FS43, US26D,
1 EA. KICK PLATE - HAGER 190S, 40"x30", INTERIOR, US32D

GROUP 2:
1 EA. HINGE - MARKAR, FM300, 84"
1 EA. LOCKSET - TRILOGY, T2 ETDL2700, WATERPROOF, US26D
1 EA. PANIC PUSH HARDWARE - VON DUPRIN 99, 626
1 EA. DOOR CLOSER - SARGENT 1431 RUO EN, US26D
1 EA. THRESHOLD - PEMKO 2716A
1 EA. DOOR SHOE - PEMKO 211APK
1 EA. DOOR SEAL - PEMKO AM888L
1 EA. FLOOR STOP & HOLDER - IVES FS43, US26D
1 EA. KICK PLATE - HAGER 190S, 34"x30", INTERIOR, US32D

GROUP 3:
3 EA. HINGES - McKINNEY T2714 4.5x4.5 NRP, US26D
1 EA. DEADBOLT - SCHLAGE B571 INDICATOR, 626
1 EA. PUSH PLATE - IVES, 8200, 6"x16", US26D
1 EA. HANDLE PULL - IVES, 8303, 6"x16", US26D
1 EA. DOOR CLOSER - SARGENT 1431 RUO EN, US26D
1 EA. KICK PLATE - HAGER 190S, 34"x12", US32D FINISH

GROUP 4:
3 EA. HINGES - MCKINNEY T2714 4.5 X 4.5 NRP, US26D
1 EA. LOCKSET - SCHLAGE L9453 ENTRANCE LOCK SCHLAGE 06 STANDARD HANDLE SATIN FINISH FULL FACE, ESCUTCHLEON L583-363 EZ TURN
1 EA. LATCH GUARD - STAINLESS STEEL, 7"
1 EA. THRESHOLD - PEMKO 175A-72
1 EA. DOOR SHOE - PEMKO 211APK
1 EA. DOOR SEAL - PEMKO AM888L
1 EA. KICK DOWN - IVES FS555, 5", BLK FINISH

GROUP 5:
3 EA. HINGES - MCKINNEY T2714 4.5 X 4.5 NRP, US26D
1 EA. LOCKSET - SCHLAGE L9453 ENTRANCE LOCK SCHLAGE 06 STANDARD HANDLE SATIN FINISH FULL FACE, ESCUTCHLEON L583-363 EZ TURN
1 EA. DOOR VENT - ROCKWOOD, LV-IY, 24"x12"
1 EA. KICK DOWN - IVES FS555 5" BLK FINISH

GROUP 6:
2 EA. HINGES - MCKINNEY T2714 4.5 X 4.5 NRP, US26D FINISH
1 EA. DEAD BOLT - SCHLAGE JD60630
1 EA. DOOR SEAL - PEMKO AM888L

FOR ALL EXTERIOR WALLS REFER TO STRUCTURAL DRAWINGS AND ARCHITECTURAL WALL SECTIONS FOR MORE DETAILS

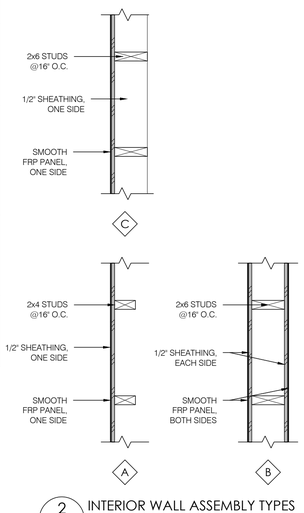

2 INTERIOR WALL ASSEMBLY TYPES

NO T TO SCALE

FINISH SCHEDULE

TAG	FIN. DESCRIPTION	MFR.	MODEL	REMARKS
FLOOR				
FF-1	FLOOR TILE - TEXTURED	BEDROSIANS	6"x6" DOTTI DIAMOND - ANTHRACITE R9 - MATTE	PRODUCTION AREA FIELD TILE
FF-2	FLOOR TILE - SMOOTH	BEDROSIANS	6"x6" DOTTI DIAMOND - ANTHRACITE R12 - MATTE	PROVIDE UNDER EQUIPMENT
TILE SUBSTRATE	EPOXY GROUT	LATICRETE	IG 2000 IND. EPOXY GROUT #2 KIT BLACK	JOB PACK
		LATICRETE	STECTRALOCK IG 2000 PART A/B EPOXY GROUT	
		LATICRETE	STECTRALOCK PART C COLOR PACKET	
		LATICRETE	PERMACOLOR GROUT	
	BOND COAT	LATICRETE	4-XLT GRAY	
	CAULKING	LATICRETE	LATASIL CAULKING	
	WATERPROOFING	LATICRETE	HYDRO BAN WATERPROOF/ ANTIFRACTURE	
FF-3	CONC. SLAB	-	-	-
BASE				
BF-1	WALL BASE - COVE	BEDROSIANS	4"x8" SMOOTH COVE - ANTHRACITE	SANITARY COVE
WALL				
WF-1	(FRP) FIBERGLASS REINFORCED PANEL	MARLITE	S 100G - 4'x10' PANELS	COLOR: WHITE; PROVIDE ALL NECESSARY TRIM PIECES
WF-2	1/2" CDX	-	-	COLOR: OUTDOOR LATEX WHITE PAINT
GUARDS				
CG	CORNER GUARD	AIS INDUSTRIES	CUSTOM	120" LONG W/ 2" WINGS, DRILLED, 90 DEGREE SHARP CORNER, BRUSHED FINISH
WG	WALL GUARD	AIS INDUSTRIES	CUSTOM	48" WIDE, WRAP FROM SERVICE WINDOW SILL TO TOP OF COVE BASE, BRUSHED FINISH
CEILING				
CLG-1	VINYL FACED ACT	USG	3260 - SHEETROCK BRAND LAY-IN CEILING PANEL	FLAT WHITE, SMOOTH
CLG-2	FRP OVER 1/2" CDX	MARLITE	S 100G - 4'x10' PANELS	COLOR: WHITE; PROVIDE ALL NECESSARY TRIM PIECES; PROVIDE ADHESIVE AND PAN HEAD SCREWS AT 24" O.C., E.W.
PAINT				
PT-1	BLDG DB LIGHT GRAY	SHERWIN-WILLIAMS	TBD	-
PT-2	BLDG DB DARK GRAY	SHERWIN-WILLIAMS	TBD	-
PT-3	BLDG DB BLUE	SHERWIN-WILLIAMS	TBD	-
PT-4	-	SHERWIN-WILLIAMS	SW-7006 - EXTRA WHITE	SEMI-GLOSS

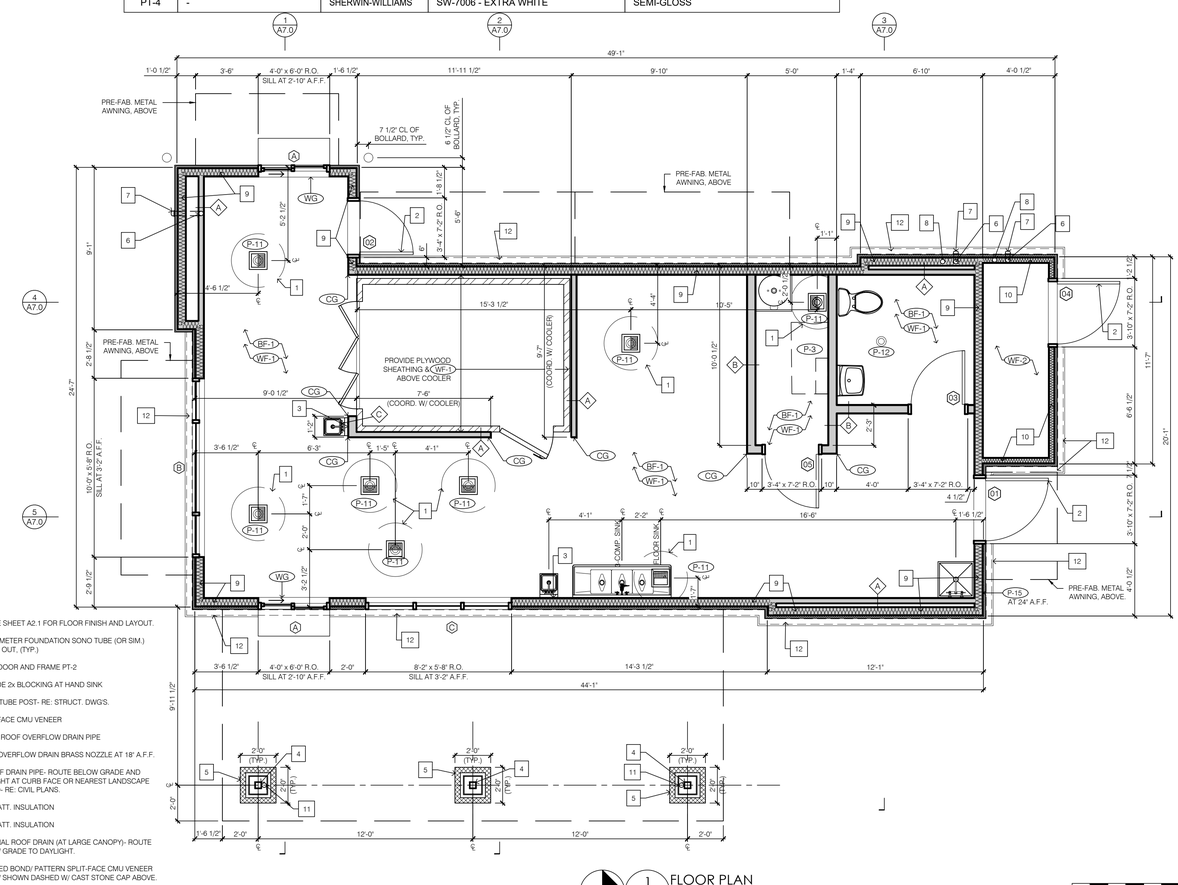

NOTES:
- REFERENCE SHEET A2.1 FOR FLOOR FINISH AND LAYOUT.

1	36" DIAMETER FOUNDATION SONO TUBE (OR SIM.) BLOCK OUT, (TYP.)
2	PAINT DOOR AND FRAME PT-2
3	PROVIDE 2x BLOCKING AT HAND SINK
4	STEEL TUBE POST- RE: STRUCT. DWGS.
5	SPLIT-FACE CMU VENEER
6	3" MIN. ROOF OVERFLOW DRAIN PIPE
7	ROOF OVERFLOW DRAIN BRASS NOZZLE AT 18" A.F.F.
8	4" ROOF DRAIN PIPE- ROUTE BELOW GRADE AND DAYLIGHT AT CURB FACE OR NEAREST LANDSCAPE ISLAND- RE: CIVIL PLANS.
9	R-19 BATT. INSULATION
10	R-13 BATT. INSULATION
11	INTERNAL ROOF DRAIN (AT LARGE CANOPY)- ROUTE BELOW GRADE TO DAYLIGHT.
12	STACKED BOND/ PATTERN SPLIT-FACE CMU VENEER BELOW SHOWN DASHED W/ CAST STONE CAP ABOVE.

1 FLOOR PLAN

SCALE: 1/4" = 1'-0"

0' 2' 4' 6'

GENERAL NOTES:

1. ALL DIMENSIONS FROM SLAB EDGE/ EXTERIOR FACE OF SHEATHING TO FACE OF STUD TO CENTERLINE OF FIXTURES UNLESS OTHERWISE NOTED. SLAB EDGE AND EXTERIOR FACE OF WALL SHEATHING ARE ALIGNED.
2. G.C. TO VERIFY ALL DIMENSIONS IN THE FIELD BEFORE COMMENCING CONSTRUCTION.
3. ALL INTERIOR FINISHES SHALL COMPLY WITH SECTION 803. INTERIOR FINISH MATERIALS APPLIED TO WALL AND CEILINGS SHALL BE TESTED AS SPECIFIED IN SECTION 803.

   FLAME SPREAD RATINGS:
   WALL TILE - CLASS A - <25
   WALL PAINT - CLASS A - <5
   PLASTIC LAMINATE - CLASS A - <25
   FRP PANELS - CLASS A - <25
   STAINLESS STEEL CORNER GUARDS - CLASS A - <25
   CEILING TILE - CLASS A - <25
4. FIRE BLOCKING MUST BE PROVED IN ACCORDANCE WITH SECTION 718.2 AT THE FOLLOWING LOCATIONS:
   a. IN CONCEALED SPACES OF STUD WALLS AND PARTITIONS, INCLUDING FURRED SPACES, AT THE CEILING AND FLOOR LEVELS.
   b. IN CONCEALED SPACES OF STUD WALLS AND PARTITIONS, INCLUDING FURRED SPACES, AT 10-FOOT INTERVALS ALONG THE LENGTH OF THE WALL.
   c. AT THE INTERCONNECTIONS BETWEEN CONCEALED VERTICAL AND HORIZONTAL SPACES SUCH AS OCCUR AT SOFFITS, DROP CEILINGS AND COVE CEILINGS.
   d. IN CONCEALED SPACES BETWEEN STAIR STRINGERS AT THE TOP AND BOTTOM OF THE RUN AND BETWEEN STUDS ALONG AND IN LINE WITH THE RUN OF STAIRS IF THE WALL UNDER STAIRS IS UNFINISHED.
   e. IN OPENINGS AROUND VENTS, PIPES, DUCTS, CHIMNEYS, FIREPLACES AND SIMILAR OPENINGS WHICH AFFORD A PASSAGE FOR FIRE AT CEILINGS AND FLOOR LEVELS, WITH NONCOMBUSTIBLE MATERIALS.

PARTITION KEY

- CMU VENEER
- INTERIOR AND EXTERIOR WALL FRAMING
- NEW PRE-FAB WALK-IN COOLER
- BATT INSULATION

ARCHITECT
CORALIC, LLC
EDIN CORALIC
9700 MACKENZIE ROAD, STE. 222,
ST. LOUIS, MO 63123
p: 314.578.4953
e: edin@coralicarchitecture.com

STRUCTURAL ENGINEER
JAMES C. KREHER
JIM KREHER
208 N. MAIN STREET,
COLUMBIA, IL 62236
p: 618.281.8505
jimk@kreherengineering.com

MEP ENGINEER
Case Engineering
DARRELL R. CASE
796 MERUS CT.,
FENTON, MO 63026
T. 636.349.1600 F. 636.349.1730
dcase@caseengineeringinc.com

EDIN CORALIC ARCHITECT
A-2013031004 - EXP. 12-31-2021

STATE OF MISSOURI
EDIN CORALIC
NUMBER
A-2013031004
ARCHITECT
10.11.2021

MISSOURI CERTIFICATE OF AUTHORITY NO. 2013041393

Project No: MO0102

Dutch Bros Coffee - New Freestanding Store

500 NW Chipman Road. Lee's Summit, Missouri 64086
for: Dutch Bros Coffee
110 SW 4th St.
Grants Pass, OR 97526

ISSUED FOR PERMIT:
10.11.2021

REV:	DATE:	DESCRIPTION:

SHEET NAME:

FLOOR PLAN/ DETAILS/ SCHEDULES

SHEET NUMBER:

A2.0

© 2020 DB Franchising USA, LLC

FINISH SCHEDULE

TAG	FIN. DESCRIPTION	MFR.	MODEL	REMARKS
FLOOR				
FF-1	FLOOR TILE - TEXTURED	BEDROSIANS	6"x6" DOTTI DIAMOND - ANTHRACITE R9 - MATTE	PRODUCTION AREA FIELD TILE
FF-2	FLOOR TILE - SMOOTH	BEDROSIANS	6"x6" DOTTI DIAMOND - ANTHRACITE R12 - MATTE	PROVIDE UNDER EQUIPMENT
TILE SUBSTRATE	EPOXY GROUT	LATICRETE	IG 2000 IND. EPOXY GROUT #2 KIT BLACK	JOB PACK
		LATICRETE	STECTRALOCK IG 2000 PART A/B EPOXY GROUT	
		LATICRETE	STECTRALOCK PART C COLOR PACKET	
		LATICRETE	PERMACOLOR GROUT	
	BOND COAT	LATICRETE	4-XLT GRAY	
	CAULKING	LATICRETE	LATASIL CAULKING	
	WATERPROOFING	LATICRETE	HYDRO BAN WATERPROOF/ ANTIFRACTURE	
FF-3	CONC. SLAB	-	-	-

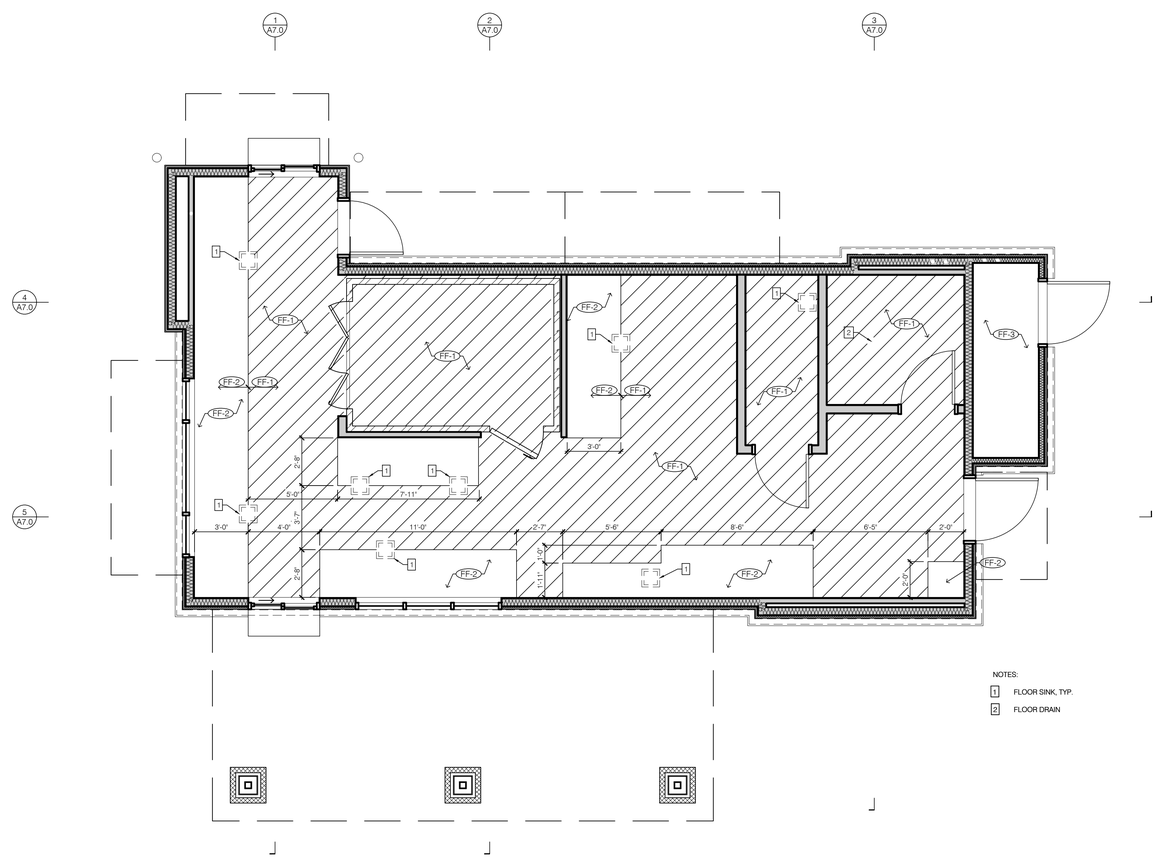

1 FLOOR TILE PLAN

SCALE: 1/4" = 1'-0"

0' 2' 4' 6'

ARCHITECT
CORALIC, LLC
EDIN CORALIC
9700 MACKENZIE ROAD, STE. 222,
ST. LOUIS, MO 63123
p: 314.578.4953
e: edin@coralicarchitecture.com

STRUCTURAL ENGINEER
JAMES C. KREHER
JIM KREHER
208 N. MAIN STREET,
COLUMBIA, IL 62236
p: 618.281.8505
jimk@kreherengineering.com

MEP ENGINEER
Case Engineering
DARRELL R. CASE
796 MERUS CT.,
FENTON, MO 63026
T. 636.349.1600 F. 636.349.1730
dcase@caseengineeringinc.com

EDIN CORALIC ARCHITECT
A-2013031004 - EXP. 12-31-2021

STATE OF MISSOURI
EDIN CORALIC
NUMBER A-2013031004
ARCHITECT
10.11.2021

MISSOURI CERTIFICATE OF AUTHORITY NO. 2013041393

Project No: MO0102

Dutch Bros Coffee - New Freestanding Store

500 NW Chipman Road. Lee's Summit, Missouri 64086
for: Dutch Bros Coffee
110 SW 4th St.
Grants Pass, OR 97526

ISSUED FOR PERMIT:
10.11.2021

REV:	DATE:	DESCRIPTION:

SHEET NAME:

FLOOR TILE PLAN

SHEET NUMBER:

A2.1

© 2020 DB Franchising USA, LLC

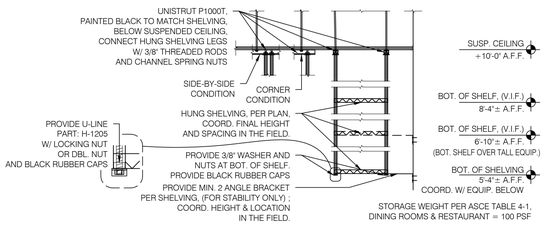

8 TYP. HANGING SHELF DETAIL

SCALE: 1/2" = 1'-0"

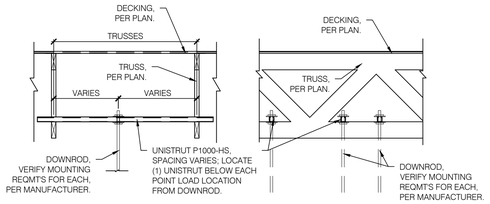

7 TYP. HANGING SHELF BRACING DETAIL

SCALE: 1/2" = 1'-0"

GENERAL NOTES:

1. SEISMIC DESIGN CATEGORY FOR ACOUSTICAL CEILING IS CLASS B. ALL REQUIREMENTS MUST BE MET.
2. REFER TO ELECTRICAL LIGHTING PLAN FOR FIXTURE SPECIFICATIONS.
3. CONTRACTOR TO SET CONTROL POINTS FOR LAYOUT.

NOTE:

PER IBC 1011.6.2 THE FACE OF AN EXIT SIGN ILLUMINATED FROM AN EXTERNAL SOURCE SHALL HAVE AN INTENSITY OF NOT LESS THAN 5 FOOTCANDLES (54 LUX).

PER IBC 1011.6.3 EXIT SIGNS SHALL BE ILLUMINATED AT ALL TIMES. TO ENSURE CONTINUED ILLUMINATION FOR A DURATION OF NOT LESS THAN 90 MINUTES IN CASE OF PRIMARY POWER LOSS, THE SIGN ILLUMINATION MEANS SHALL BE CONNECTED TO AN EMERGENCY POWER SYSTEM PROVIDED FROM STORAGE BATTERIES... THE INSTALLATION OF THE EMERGENCY POWER SYSTEM SHALL BE IN ACCORDANCE WITH CBC CHAPTER 27.

NOTE: ELECTRICAL EQUIPMENT SHALL BE INSTALLED IN A NEAT AND WORKMANLIKE MANNER.

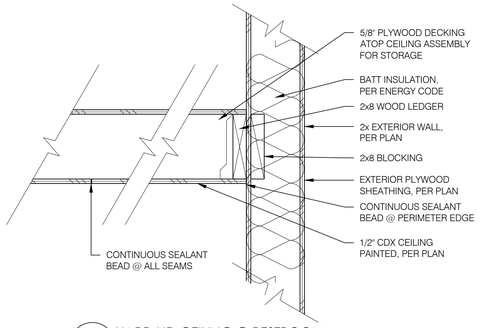

6 HARD LID CEILING @ RESTROOM

SCALE: 1 1/2" = 1'-0"

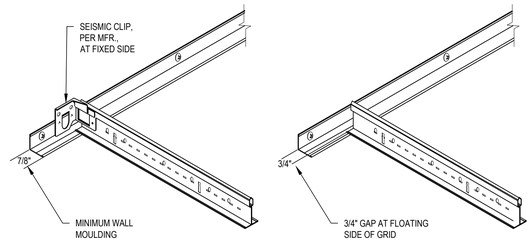

5 TYP. GRID BRACING

SCALE: 3" = 1'-0"

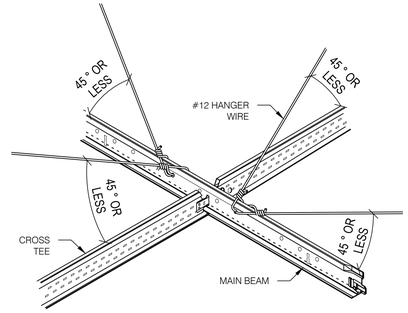

4 TYP. SPLAY WIRE BRACING

SCALE: 3" = 1'-0"

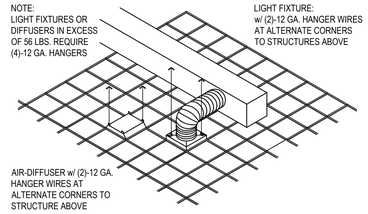

3 TYP. FIXTURE HANGER WIRES

SCALE: 1-1/2" = 1'-0"

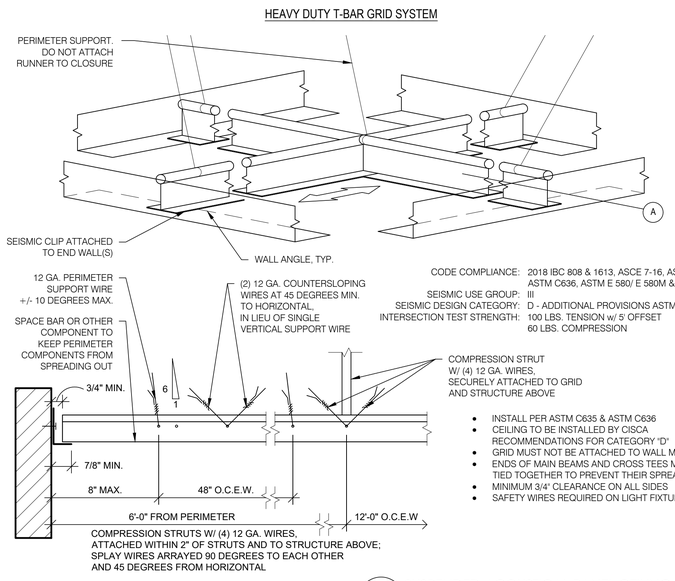

CODE COMPLIANCE: 2018 IBC 808 & 1613, ASCE 7-16, ASTM C635, ASTM C636, ASTM E 580/ E 580M & CISCA
SEISMIC USE GROUP: III
SEISMIC DESIGN CATEGORY: D - ADDITIONAL PROVISIONS ASTM E580
INTERSECTION TEST STRENGTH: 100 LBS. TENSION w/ 5' OFFSET
60 LBS. COMPRESSION

- INSTALL PER ASTM C635 & ASTM C636
- CEILING TO BE INSTALLED BY CISCA RECOMMENDATIONS FOR CATEGORY 'D'
- GRID MUST NOT BE ATTACHED TO WALL MOLDING
- ENDS OF MAIN BEAMS AND CROSS TEES MUST BE TIED TOGETHER TO PREVENT THEIR SPREADING
- MINIMUM 3/4" CLEARANCE ON ALL SIDES
- SAFETY WIRES REQUIRED ON LIGHT FIXTURES

2 SUSPENDED ACOUSTICAL PANEL CEILING-TYP.

SCALE: 3" = 1'-0"

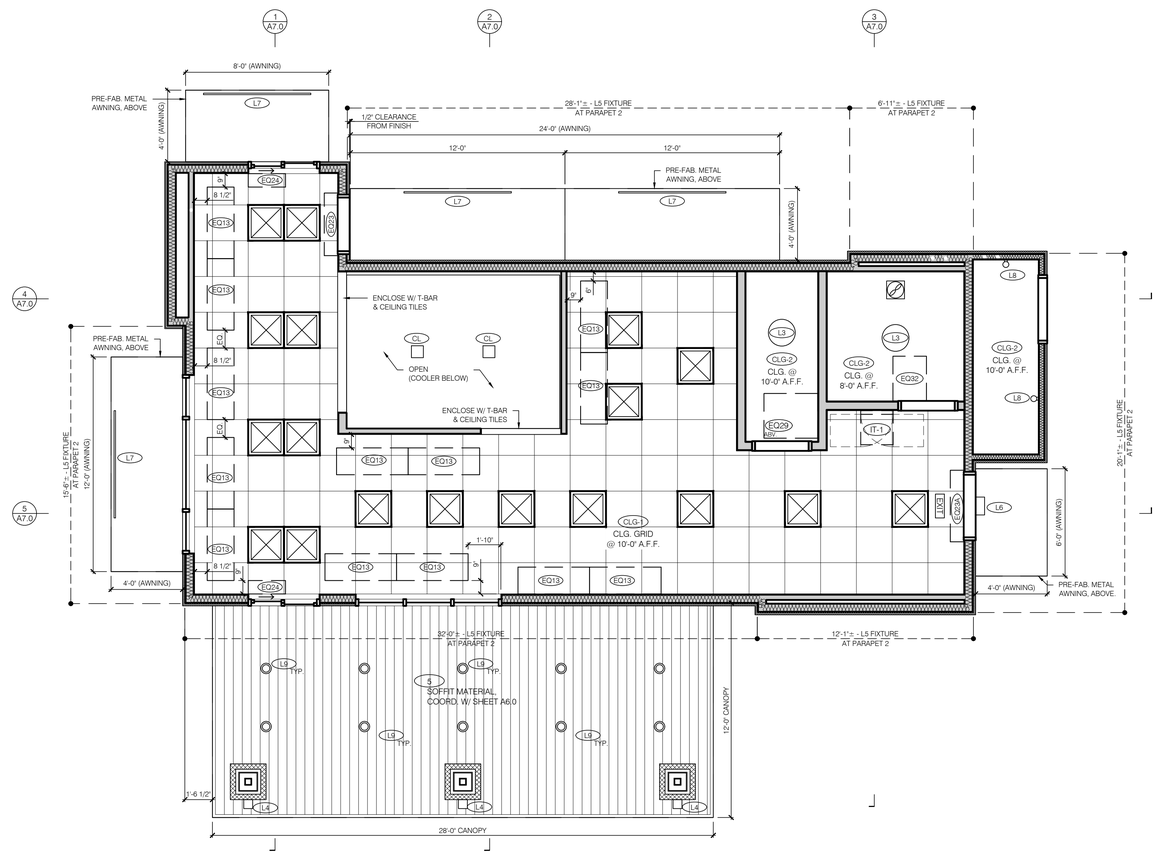

1 REFLECTED CEILING PLAN

SCALE: 1/4" = 1'-0"

0' 2' 4' 6'

ARCHITECT
CORALIC, LLC
EDIN CORALIC
9700 MACKENZIE ROAD, STE. 222,
ST. LOUIS, MO 63123
p: 314.578.4953
e: edin@coralicarchitecture.com

STRUCTURAL ENGINEER
JAMES C. KREHER
JIM KREHER
208 N. MAIN STREET,
COLUMBIA, IL 62236
p: 618.281.8505
jimk@kreherengineering.com

MEP ENGINEER
Case Engineering
DARRELL R. CASE
796 MERUS CT.,
FENTON, MO 63026
T. 636.349.1600 F. 636.349.1730
dcase@caseengineeringinc.com

EDIN CORALIC ARCHITECT
A-2013031004 - EXP. 12-31-2021

STATE OF MISSOURI
EDIN CORALIC
NUMBER A-2013031004
ARCHITECT
10.11.2021

MISSOURI CERTIFICATE OF AUTHORITY NO. 2013041393

Project No: MO0102

Dutch Bros Coffee - New Freestanding Store

500 NW Chipman Road. Lee's Summit, Missouri 64086
for: Dutch Bros Coffee
110 SW 4th St.
Grants Pass, OR 97526

ISSUED FOR PERMIT:
10.11.2021

REV:	DATE:	DESCRIPTION:

SHEET NAME:

REFLECTED CEILING PLAN/ CEILING DETAILS

SHEET NUMBER:

A3.0

© 2020 DB Franchising USA, LLC

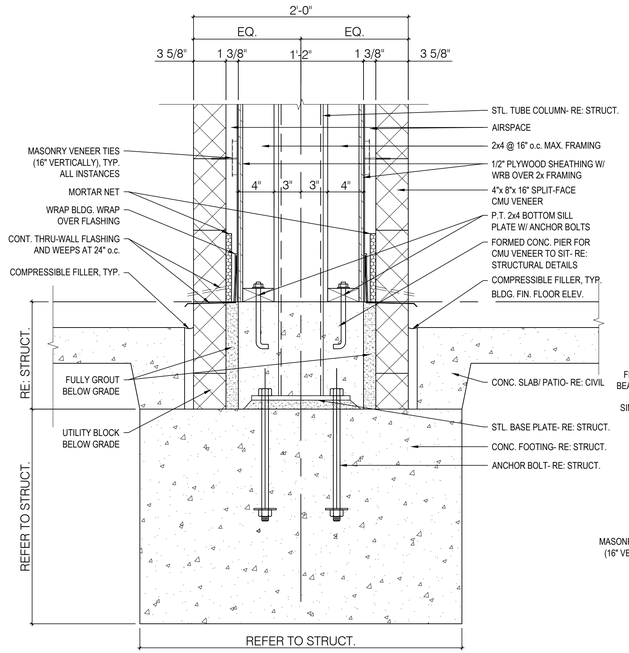

13 CANOPY CMU VENEER COLUMN/ FTG. DETAIL

SCALE: 1 1/2" = 1'-0"

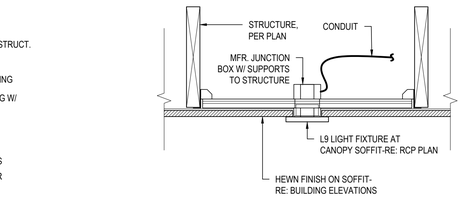

14 CANOPY SOFFIT LIGHT FIXTURE

SCALE: 1-1/2" = 1'-0"

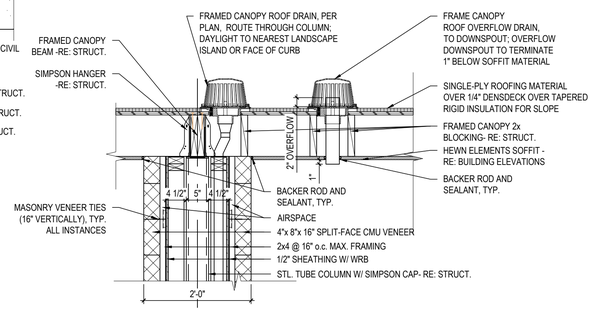

12 CANOPY ROOF DRAIN DETAIL

SCALE: 3/4" = 1'-0"

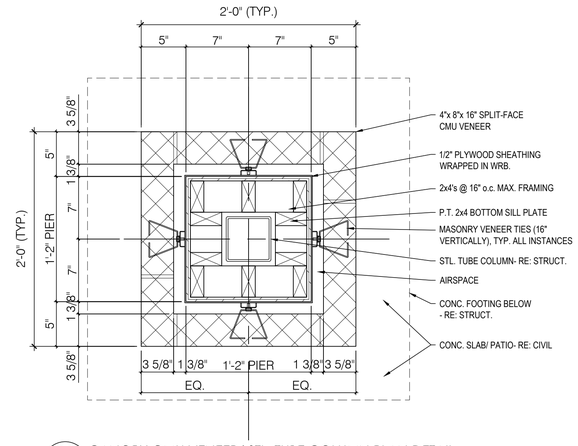

11 CANOPY CMU VENEER/ STL. TUBE COLUMN PLAN DETAIL

SCALE: 1 1/2" = 1'-0"

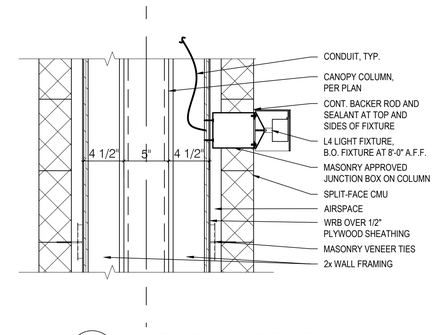

10 CANOPY COLUMN LIGHT FIXTURE

SCALE: 1-1/2" = 1'-0"

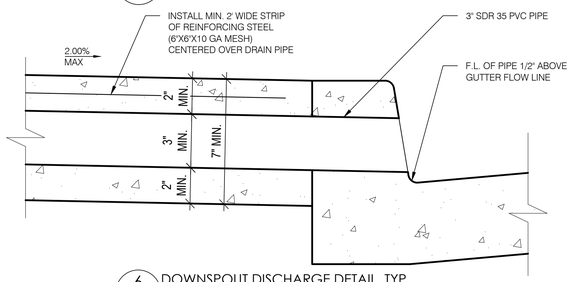

6 DOWNSPOUT DISCHARGE DETAIL, TYP.

SCALE: 1 1/2" = 1'-0"

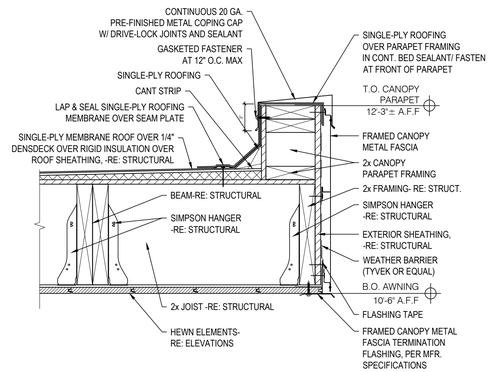

9 CANOPY FASCIA/ SOFFIT DETAIL 2

SCALE: 1-1/2" = 1'-0"

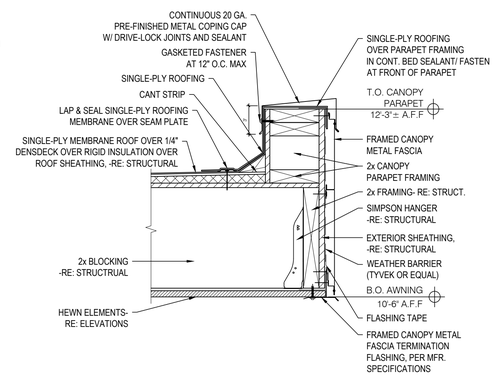

8 CANOPY FASCIA/ SOFFIT DETAIL 1

SCALE: 1-1/2" = 1'-0"

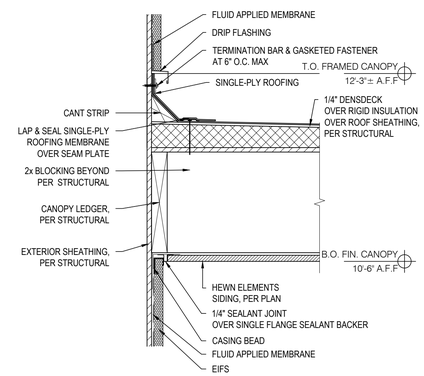

7 CANOPY LEDGER DETAIL

SCALE: 1-1/2" = 1'-0"

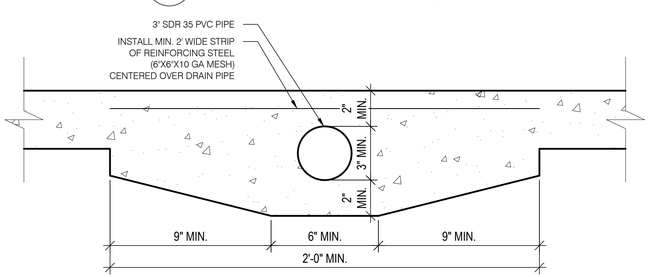

5 DOWNSPOUT DISCHARGE DETAIL, TYP.

SCALE: 1 1/2" = 1'-0"

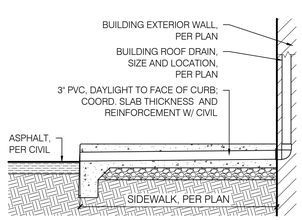

4 DOWNSPOUT DISCHARGE DETAIL, TYP.

SCALE: 1/2" = 1'-0"

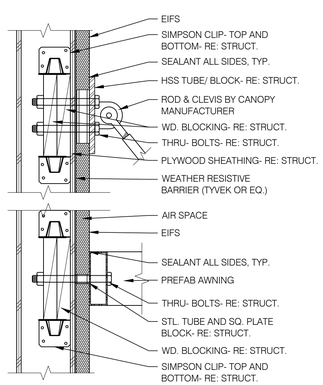

3 AWNING BLOCKING DETAIL AT EIFS

SCALE: 1-1/2" = 1'-0"

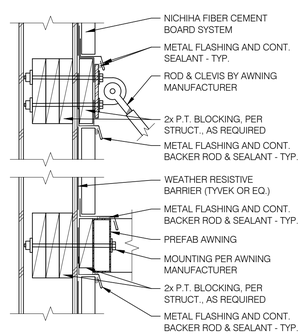

2 AWNING BLOCKING DETAIL AT NICHIHA

SCALE: 1-1/2" = 1'-0"

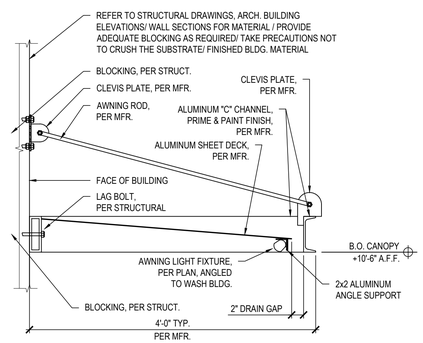

1 AWNING DETAIL

SCALE: 1" = 1'-0"

ARCHITECT
CORALIC, LLC
EDIN CORALIC
9700 MACKENZIE ROAD, STE. 222,
ST. LOUIS, MO 63123
p: 314.578.4953
e: edin@coralicarchitecture.com

STRUCTURAL ENGINEER
JAMES C. KREHER
JIM KREHER
208 N. MAIN STREET,
COLUMBIA, IL 62236
p: 618.281.8505
jimk@kreherengineering.com

MEP ENGINEER
Case Engineering
DARRELL R. CASE
796 MERUS CT.,
FENTON, MO 63026
T. 636.349.1600 F. 636.349.1730
dcase@caseengineeringinc.com

EDIN CORALIC ARCHITECT
A-2013031004 - EXP. 12-31-2021

STATE OF MISSOURI
EDIN CORALIC
NUMBER A-2013031004
ARCHITECT
10.11.2021

MISSOURI CERTIFICATE OF AUTHORITY NO. 2013041393

Project No: MO0102

Dutch Bros Coffee - New Freestanding Store

500 NW Chipman Road, Lee's Summit, Missouri 64086
for: Dutch Bros Coffee
110 SW 4th St.
Grants Pass, OR 97526

ISSUED FOR PERMIT:
10.11.2021

REV:	DATE:	DESCRIPTION:

SHEET NAME:

AWNING/ CANOPY DETAILS

SHEET NUMBER:

A3.1

© 2020 DB Franchising USA, LLC

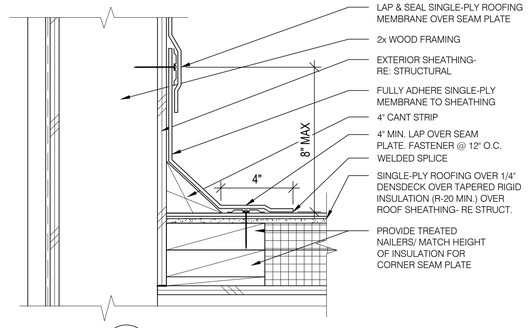

11 TYPICAL ROOF TO PARAPET

SCALE: 3" = 1'-0"

GENERAL NOTES:

1. CONTRACTOR TO PROVIDE A FULLY ADHERED SINGLE-PLY ROOFING MEMBRANE (BY DURO-LAST- RE: G0.1 FOR DURO-LAST NATIONAL ACCOUNT CONTACT INFO.) OVER 1/4" DENSDECK PRIME COVER BOARD OVER MIN. R-20 RIGID INSULATION (INSTALLED IN 2 LAYERS W/ STAGGERED JOINTS) OVER PLYWOOD DECK- RE: STRUCTURAL DWG'S.
2. COORDINATE WITH PLUMBING, MECHANICAL, AND ELECTRICAL DRAWINGS FOR LOCATION AND NUMBER OF OTHER ROOF PENETRATIONS (IE: VENT STACKS VENT PIPES, CONDUIT PENETRATIONS, ETC.). FLASH ALL PENETRATIONS WEATHER TIGHT.
3. SLOPE ALL CRICKETS AS SHOWN AT A MINIMUM SLOPE OF 1/4" PER FOOT FROM HORIZ. PLANE, UNLESS NOTED OTHERWISE.
4. PROVIDE BUILT-UP TAPERED INSULATION ROOF CRICKETS AT ALL CURB LOCATIONS TO ALLOW POSITIVE DRAINAGE AND PREVENT PONDING.
5. ALL METAL ROOF FLASHING DETAILS SHALL BE PER SMACNA AND MANUFACTURERS RECOMMENDATIONS AND REVIEWED BY THE ARCHITECT FOR DESIGN INTENT.
6. PROVIDE SUPPLEMENTAL INSULATION OVERBUILDS WHERE INDICATED FOR ROOF SLOPE CONTINUATION.

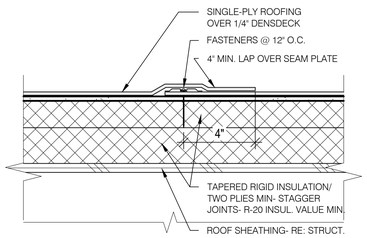

10 SINGLE PLY SYSTEM ASSEMBLY

SCALE: 3" = 1'-0"

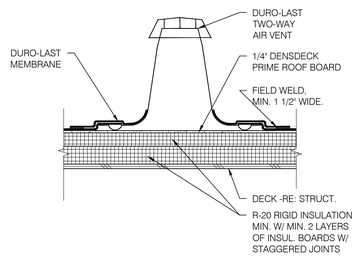

9 TWO-WAY AIR VENT

SCALE: 1 1/2" = 1'-0"

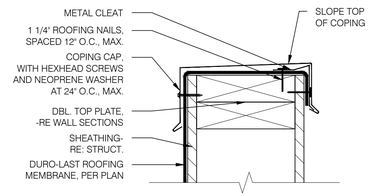

8 PARAPET CAP W/ CONT. CLEAT

SCALE: 3" = 1'-0"

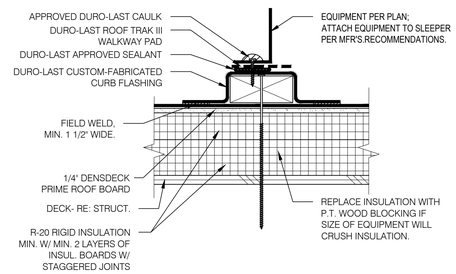

7 MECHANICAL UNIT SLEEPER

SCALE: 3" = 1'-0"

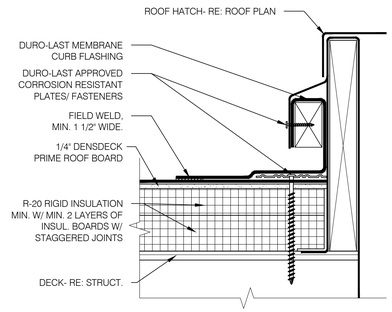

6 ROOF ACCESS HATCH

SCALE: 3" = 1'-0"

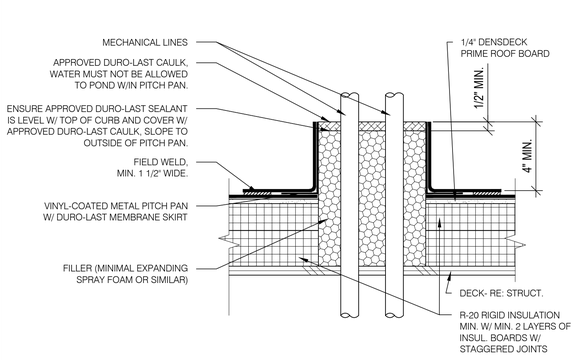

5 MECHANICAL LINES PENETRATION

SCALE: 3" = 1'-0"

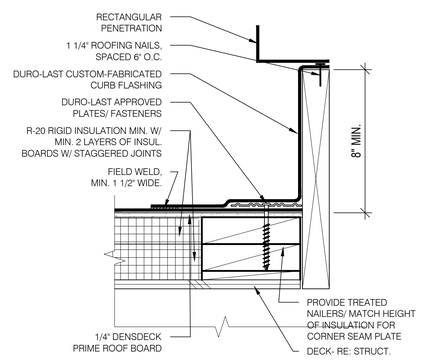

4 CURB DETAIL

SCALE: 3" = 1'-0"

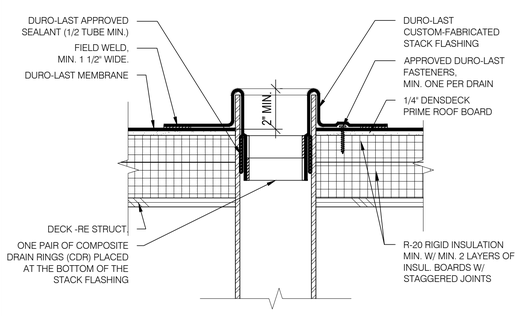

3 ROOF OVERFLOW

SCALE: 3" = 1'-0"

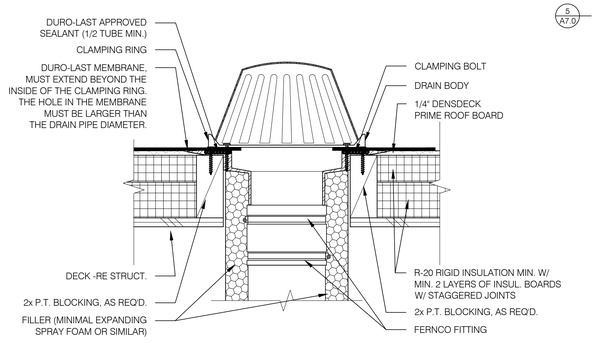

2 TYPICAL 4" ROOF DRAIN

SCALE: 3" = 1'-0"

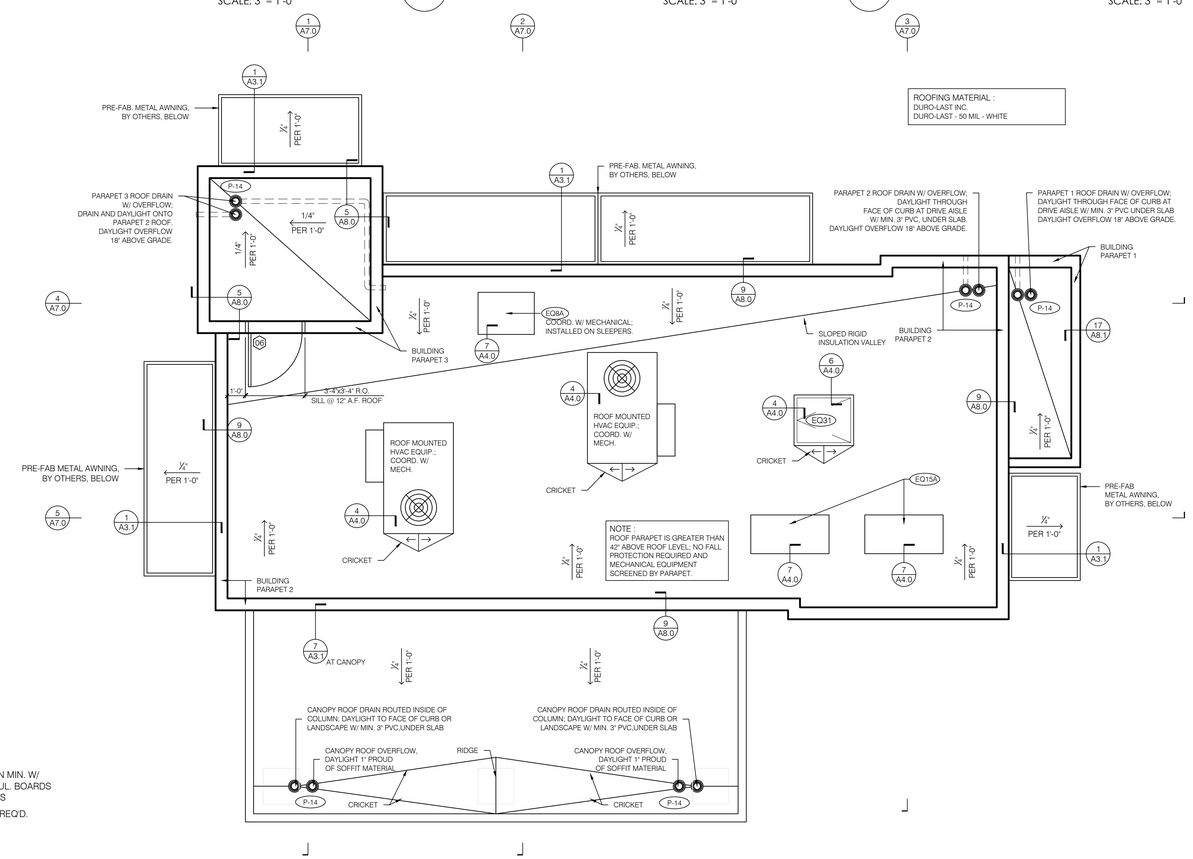

1 ROOF PLAN

SCALE: 1/4" = 1'-0"

0' 2' 4' 6'

ARCHITECT
CORALIC, LLC
EDIN CORALIC
9700 MACKENZIE ROAD, STE. 222,
ST. LOUIS, MO 63123
p: 314.578.4953
e: edin@coralicarchitecture.com

STRUCTURAL ENGINEER
JAMES C. KREHER
JIM KREHER
208 N. MAIN STREET,
COLUMBIA, IL 62236
p: 618.281.8505
jimk@kreherengineering.com

MEP ENGINEER
Case Engineering
DARRELL R. CASE
796 MERUS CT.,
FENTON, MO 63026
T. 636.349.1600 F. 636.349.1730
dcase@caseengineeringinc.com

EDIN CORALIC ARCHITECT
A-2013031004 - EXP. 12-31-2021

STATE OF MISSOURI
EDIN CORALIC
NUMBER A-2013031004
ARCHITECT
10.11.2021

MISSOURI CERTIFICATE OF AUTHORITY NO. 2013041393

Project No: MO0102

Dutch Bros Coffee - New Freestanding Store

500 NW Chipman Road, Lee's Summit, Missouri 64086
for: Dutch Bros Coffee
110 SW 4th St.
Grants Pass, OR 97526

ISSUED FOR PERMIT:
10.11.2021

REV:	DATE:	DESCRIPTION:

SHEET NAME:

ROOF PLAN/ ROOF DETAILS

SHEET NUMBER:

A4.0

© 2020 DB Franchising USA, LLC

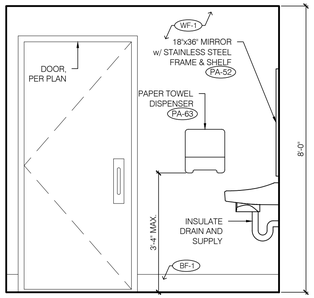

10 RESTROOM LEFT SIDE ELEVATION

SCALE: 1/2" = 1'-0"

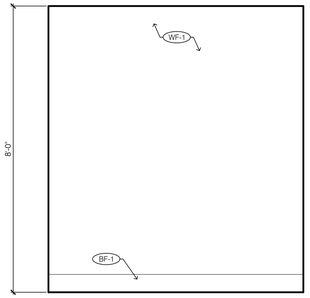

9 RESTROOM REAR ELEVATION

SCALE: 1/2" = 1'-0"

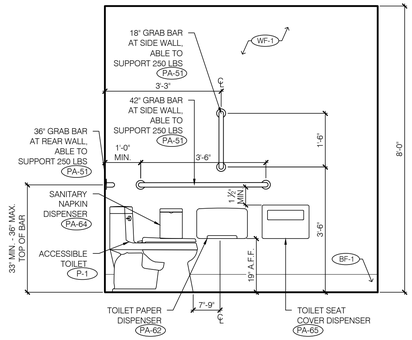

8 RESTROOM RIGHT SIDE ELEVATION

SCALE: 1/2" = 1'-0"

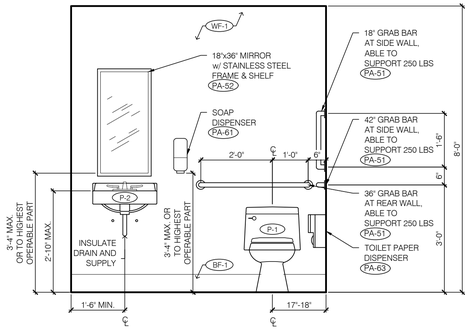

7 RESTROOM FRONT ELEVATION

SCALE: 1/2" = 1'-0"

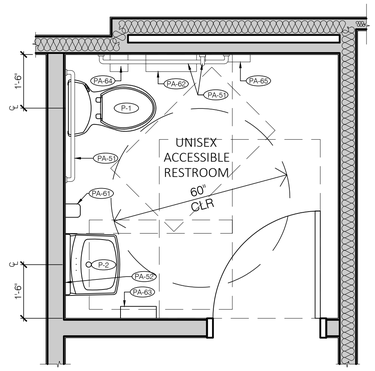

6 ENLARGED RESTROOM PLAN

SCALE: 1/2" = 1'-0"

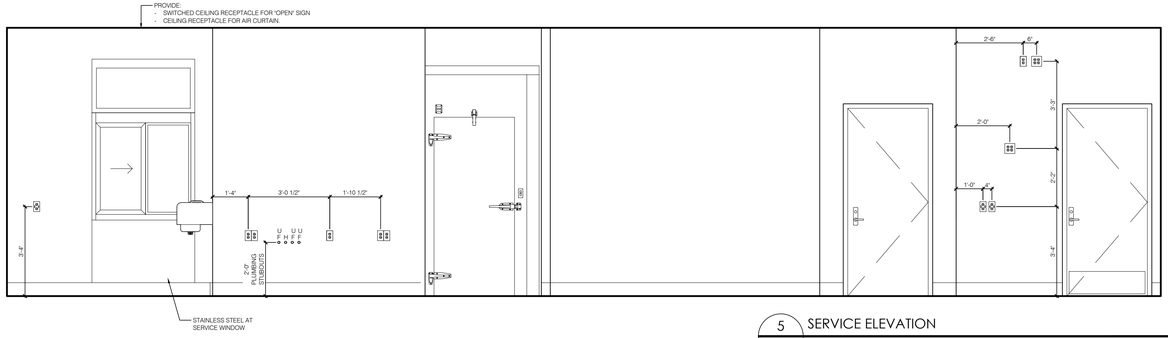

5 SERVICE ELEVATION

SCALE: 3/8" = 1'-0"

4 SERVICE ELEVATION

SCALE: 3/8" = 1'-0"

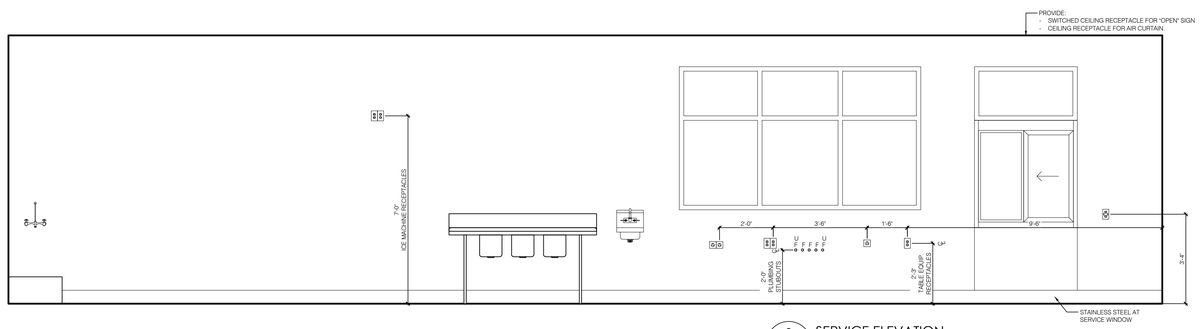

3 SERVICE ELEVATION

SCALE: 3/8" = 1'-0"

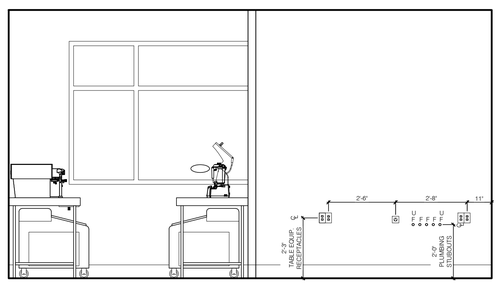

2 SERVICE ELEVATION

SCALE: 3/8" = 1'-0"

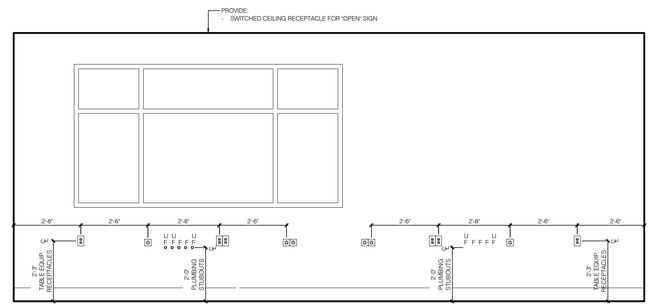

1 SERVICE ELEVATION

SCALE: 3/8" = 1'-0"

ARCHITECT
CORALIC, LLC
EDIN CORALIC
9700 MACKENZIE ROAD, STE. 222,
ST. LOUIS, MO 63123
p: 314.578.4953
e: edin@coralicarchitecture.com

STRUCTURAL ENGINEER
JAMES C. KREHER
JIM KREHER
208 N. MAIN STREET,
COLUMBIA, IL 62236
p: 618.281.8505
jimk@kreherengineering.com

MEP ENGINEER
Case Engineering
DARRELL R. CASE
796 MERUS CT.,
FENTON, MO 63026
T. 636.349.1600 F. 636.349.1730
dcase@caseengineeringinc.com

EDIN CORALIC ARCHITECT
A-2013031004 - EXP. 12-31-2021

STATE OF MISSOURI
EDIN CORALIC
NUMBER A-2013031004
ARCHITECT
10.11.2021

MISSOURI CERTIFICATE OF AUTHORITY NO. 2013041393

Project No: MO0102

Dutch Bros Coffee - New Freestanding Store

500 NW Chipman Road. Lee's Summit, Missouri 64086
for: Dutch Bros Coffee
110 SW 4th St.
Grants Pass, OR 97526

ISSUED FOR PERMIT:
10.11.2021

REV:	DATE:	DESCRIPTION:

SHEET NAME:

INTERIOR ELEVATIONS

SHEET NUMBER:

A5.0

© 2020 DB Franchising USA, LLC

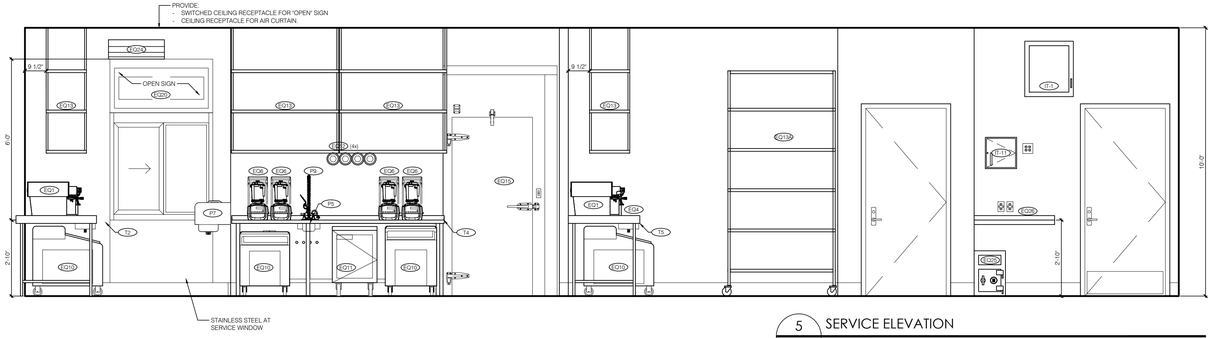

5 SERVICE ELEVATION

SCALE: 3/8" = 1'-0"

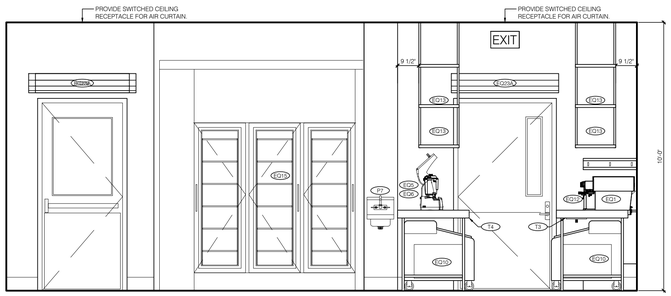

4 SERVICE ELEVATION

SCALE: 3/8" = 1'-0"

3 SERVICE ELEVATION

SCALE: 3/8" = 1'-0"

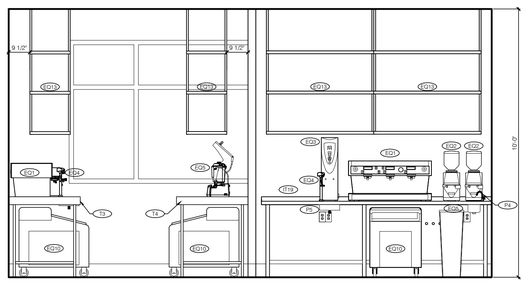

2 SERVICE ELEVATION

SCALE: 3/8" = 1'-0"

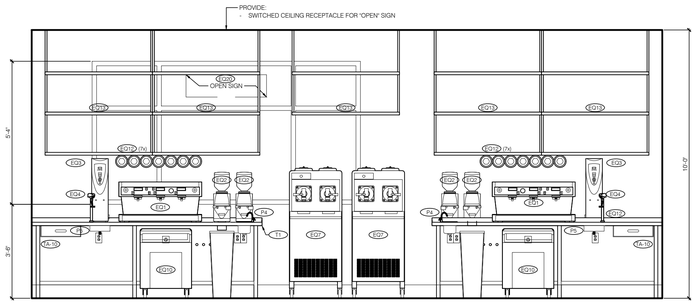

1 SERVICE ELEVATION

SCALE: 3/8" = 1'-0"

ARCHITECT
CORALIC, LLC
EDIN CORALIC
9700 MACKENZIE ROAD, STE. 222,
ST. LOUIS, MO 63123
p: 314.578.4953
e: edin@coralicarchitecture.com

STRUCTURAL ENGINEER
JAMES C. KREHER
JIM KREHER
208 N. MAIN STREET,
COLUMBIA, IL 62236
p: 618.281.8505
jimk@kreherengineering.com

MEP ENGINEER
Case Engineering
DARRELL R. CASE
796 MERUS CT.,
FENTON, MO 63026
T. 636.349.1600 F. 636.349.1730
dcase@caseengineeringinc.com

EDIN CORALIC ARCHITECT
A-2013031004 - EXP. 12-31-2021

STATE OF MISSOURI
EDIN CORALIC
NUMBER
A-2013031004
ARCHITECT
10.11.2021

MISSOURI CERTIFICATE OF AUTHORITY NO. 2013041393

Project No: MO0102

Dutch Bros Coffee - New Freestanding Store

500 NW Chipman Road. Lee's Summit, Missouri 64086
for: Dutch Bros Coffee
110 SW 4th St.
Grants Pass, OR 97526

ISSUED FOR PERMIT:
10.11.2021

REV:	DATE:	DESCRIPTION:

SHEET NAME:

INTERIOR ELEVATIONS - EQUIPMENT

SHEET NUMBER:

A5.1

© 2020 DB Franchising USA, LLC

SIDING SCHEDULE - ALTERNATE w/ CANOPY

ID TAG	MATERIAL	MANUFACTURER	MODEL	REMARKS
ZONE 1 (BODY)				
1A	EIFS	BASF/ SENERGY	1 1/2" CHANNELED ADHESIVE CI DESIGN SYSTEM	COLOR: BLDG DB DARK GRAY
1B	EIFS	BASF/ SENERGY	1 1/2" CHANNELED ADHESIVE CI DESIGN SYSTEM	COLOR: BLDG DB LIGHT GRAY
ZONE 2 (TOWER)				
2	FIBER CEMENT SIDING	NICHIHA	ILLUMINATION, AWP 1818 w/ FACTORY OUTSIDE CORNERS	COLOR: BLDG DB BLUE
ZONE 3 (BASE)				
3	CMU VENEER AND SILL	WILLAMETTE GRAYSTONE OR APPROVED OTHER	4-8-16,SPLIT FACE	COLOR: CHARCOAL - REVIEW FINAL COLOR SELECTION W/ DB
ZONE 4 (FRAMED CANOPY)				
4	FASCIA	-	METAL FASCIA; FLAT	3 SIDES; COLOR: BLDG DB DARK GRAY
5	SOFFIT	HEWN ELEMENTS	NATURAL NORTHWESTERN SPRUCE	1x8, T&G, 1/8" REVEAL
6	COLUMS	WILLAMETTE GRAYSTONE OR APPROVED OTHER	4-8-16,SPLIT FACE	COLOR: CHARCOAL - REVIEW FINAL COLOR SELECTION W/ DB

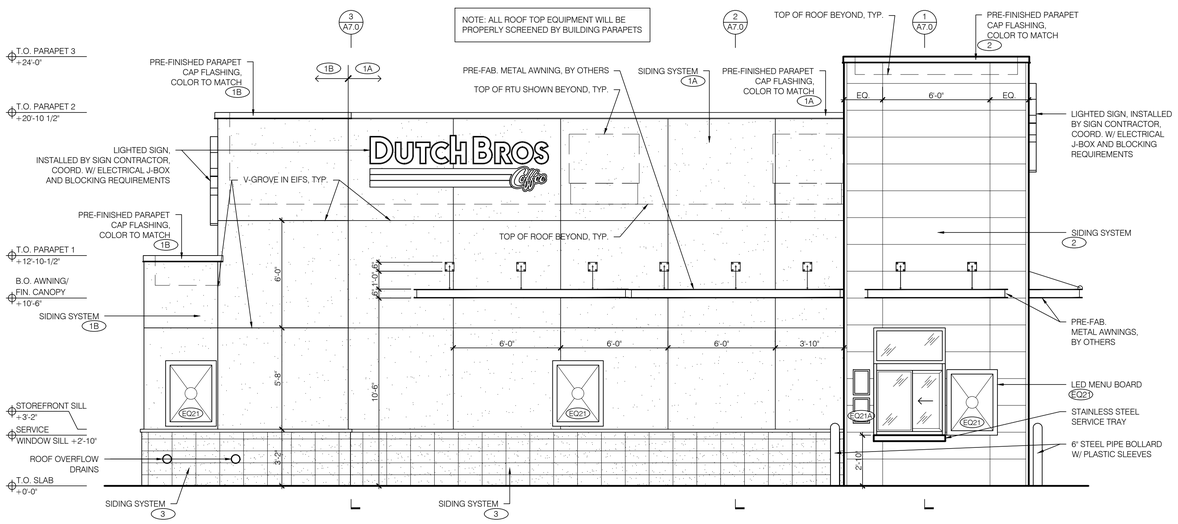

4 WEST ELEVATION - DRIVE-THRU WINDOW

SCALE: 1/4" = 1'-0"

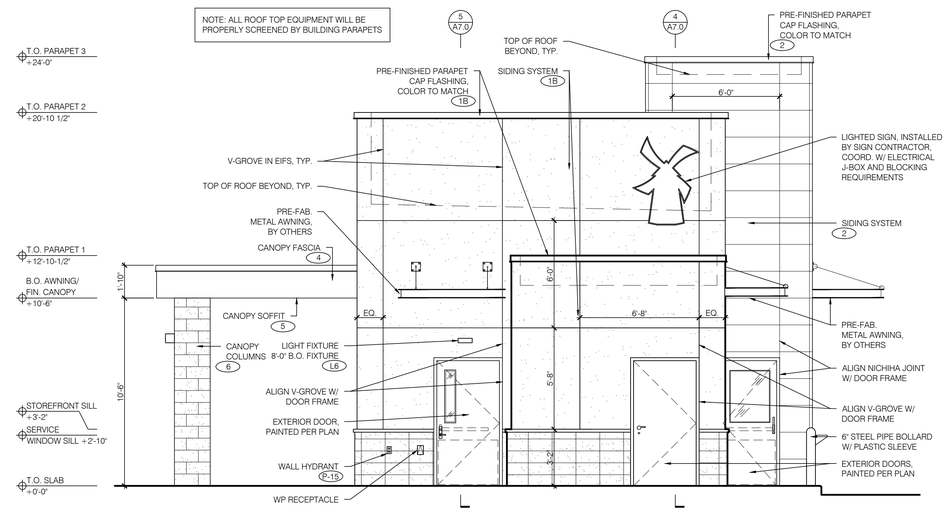

3 NORTH ELEVATION

SCALE: 1/4" = 1'-0"

NOTE: ALL EIFS TO COME WITH INTEGRAL COLOR (DB DARK/ LIGHT GRAY)- REFER TO ELEVATIONS FOR LOCATION. CONTRACTOR TO PROVIDE AN ALTERNATE BID TO ADD AN ADDITIONAL COAT OF EXTERIOR SHERWIN WILLIAMS PAINT FINISH ON ALL EIFS SURFACES.

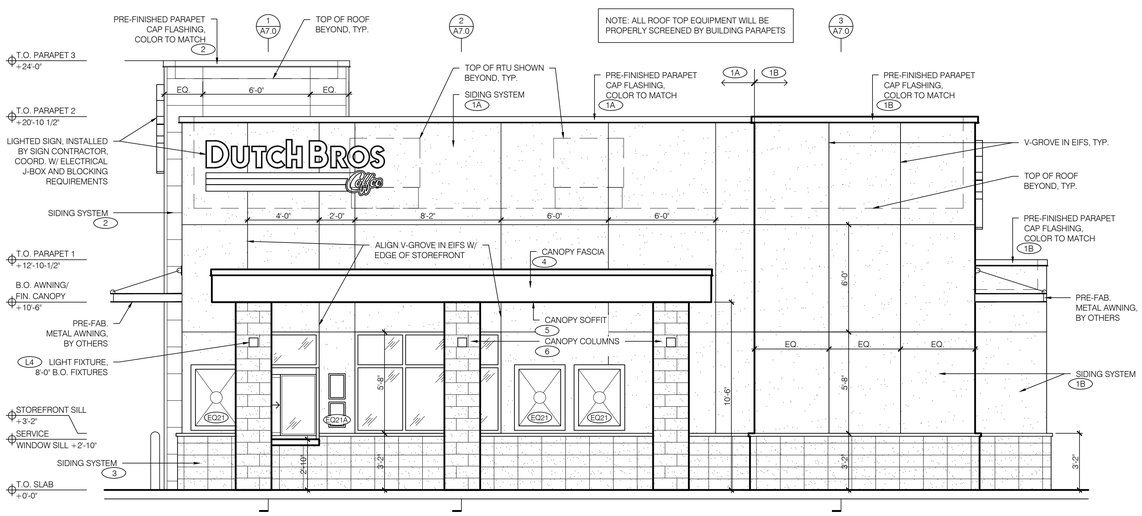

2 EAST ELEVATION - WALK-UP WINDOW

SCALE: 1/4" = 1'-0"

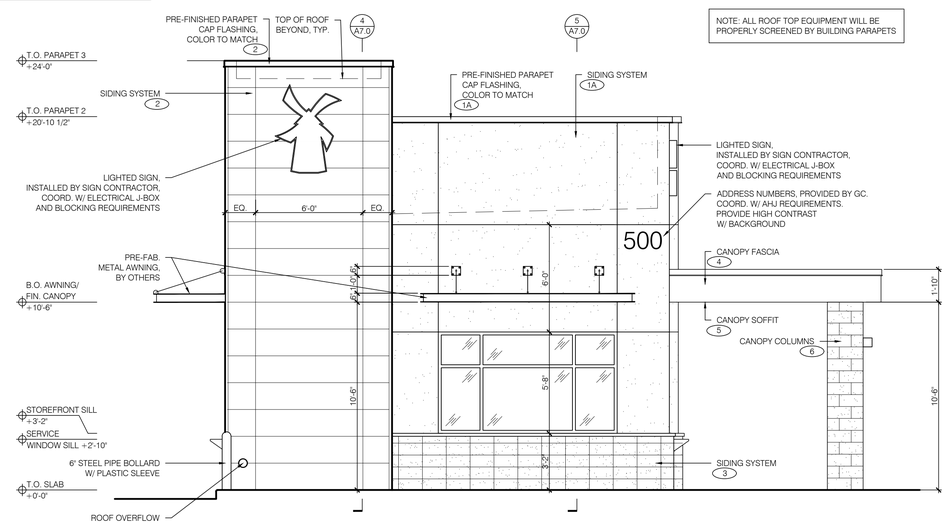

1 SOUTH ELEVATION

SCALE: 1/4" = 1'-0"

ARCHITECT
CORALIC, LLC
EDIN CORALIC
9700 MACKENZIE ROAD, STE. 222,
ST. LOUIS, MO 63123
p: 314.578.4953
e: edin@coralicarchitecture.com

STRUCTURAL ENGINEER
JAMES C. KREHER
JIM KREHER
208 N. MAIN STREET,
COLUMBIA, IL 62236
p: 618.281.8505
jimk@kreherengineering.com

MEP ENGINEER
Case Engineering
DARRELL R. CASE
796 MERUS CT.,
FENTON, MO 63026
T. 636.349.1600 F. 636.349.1730
dcase@caseengineeringinc.com

EDIN CORALIC ARCHITECT
A-2013031004 - EXP. 12-31-2021

STATE OF MISSOURI
EDIN CORALIC
NUMBER A-2013031004
ARCHITECT
10.11.2021

MISSOURI CERTIFICATE OF AUTHORITY NO. 2013041393

Project No: MO0102

Dutch Bros Coffee - New Freestanding Store

500 NW Chipman Road, Lee's Summit, Missouri 64086
for: Dutch Bros Coffee
110 SW 4th St.
Grants Pass, OR 97526

ISSUED FOR PERMIT:
10.11.2021

REV:	DATE:	DESCRIPTION:

SHEET NAME:

BUILDING ELEVATIONS

SHEET NUMBER:

A6.0

© 2020 DB Franchising USA, LLC

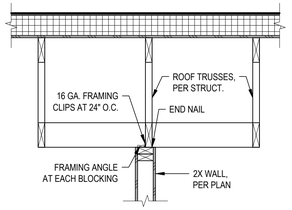

9 TYP. TOP OF WALL BRACING

SCALE: 3/4" = 1'-0"

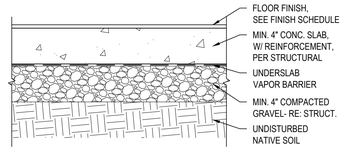

8 BLDG. CONC. SLAB

SCALE: 1-1/2" = 1'-0"

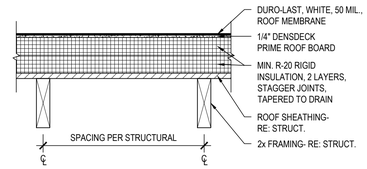

7 ROOF ASSEMBLY - JOISTS

SCALE: 1-1/2" = 1'-0"

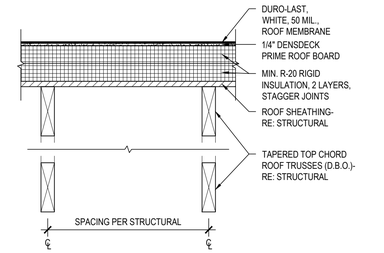

6 ROOF ASSEMBLY - TRUSSES

SCALE: 1-1/2" = 1'-0"

GENERAL NOTES:

1. COORDINATE WITH STRUCTURAL DRAWINGS FOR SIZES, CONNECTION DETAILS OF WOOD FRAMING, POSTS, JOISTS, GIRDERS, WOOD DECKING AND OTHER STRUCTURAL COMPONENTS.
2. COORDINATE WITH STRUCTURAL DRAWINGS FOR REINFORCEMENT OF CONCRETE SLABS, FOOTINGS, FOUNDATIONS, AND WALL TYPES.
3. COORDINATE WINDOW TYPES WITH FLOOR PLANS AND FRAME TYPES. PROVIDE BITUMINOUS DAMPROOFING ON ALL EXTERIOR WALLS BELOW GRADE LEVEL AS INDICATED IN THE SPECIFICATIONS.
4. AIR BARRIER JOINTS AND SEAMS SHALL BE SEALED, INCLUDING SEALING TRANSITIONS IN PLACES AND CHANGES IN MATERIALS. THE JOINTS AND SEALS SHALL BE SECURELY INSTALLED IN OR ON THE JOINT FOR ITS ENTIRE LENGTH SO AS NOT TO DISLODGE, LOOSEN OR OTHERWISE IMPAIR ITS ABILITY TO RESIST POSITIVE AND NEGATIVE PRESSURE FROM WIND, STACK EFFECT AND MECHANICAL VENTILATION.
5. PENETRATIONS OF THE AIR BARRIER SHALL BE CAULKED, GASKETED OR OTHERWISE SEALED IN A MANNER COMPATIBLE WITH THE CONSTRUCTION MATERIALS AND LOCATION.

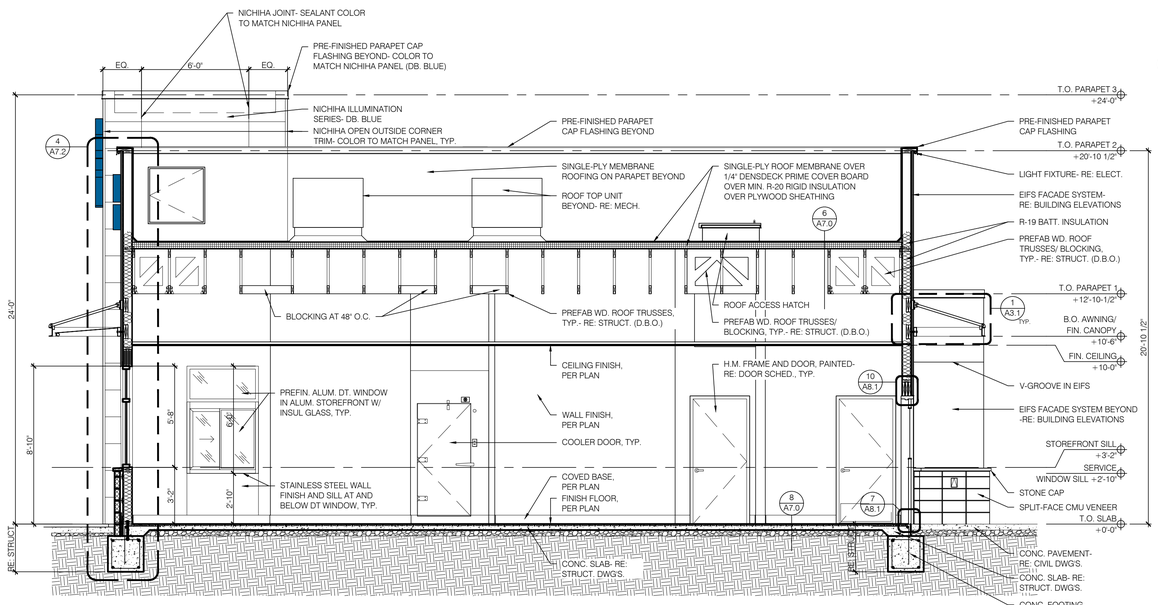

5 BUILDING SECTION

SCALE: 1/4" = 1'-0"

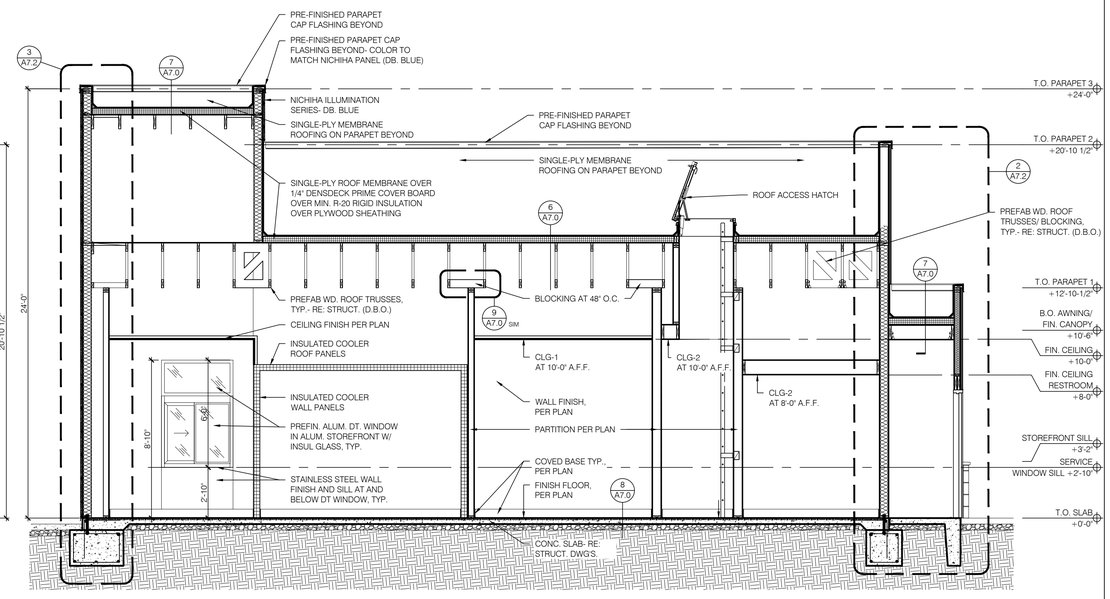

4 BUILDING SECTION

SCALE: 1/4" = 1'-0"

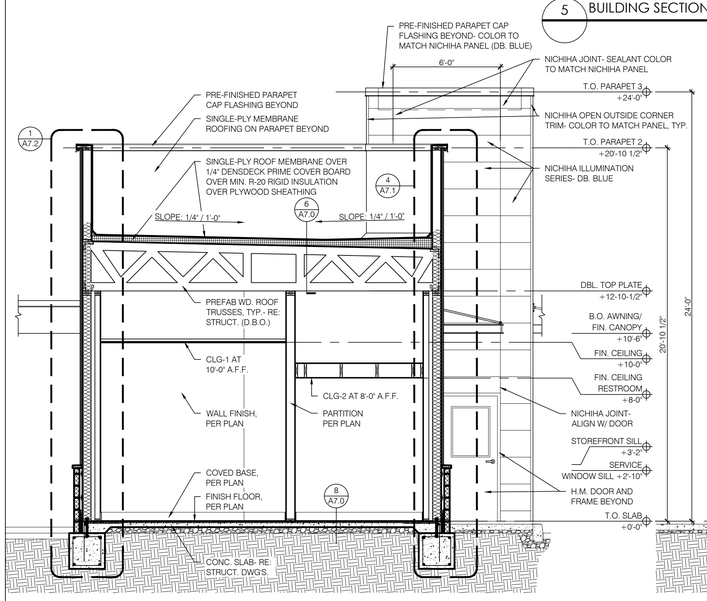

3 BUILDING SECTION

SCALE: 1/4" = 1'-0"

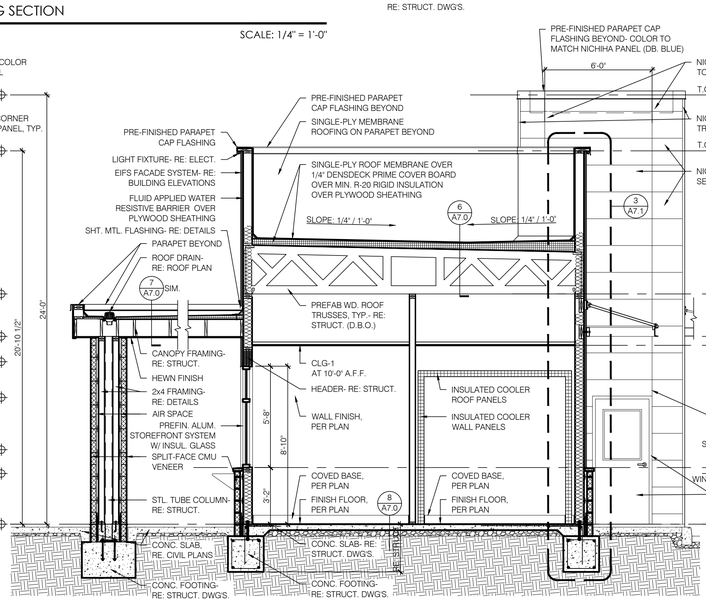

2 BUILDING SECTION

SCALE: 1/4" = 1'-0"

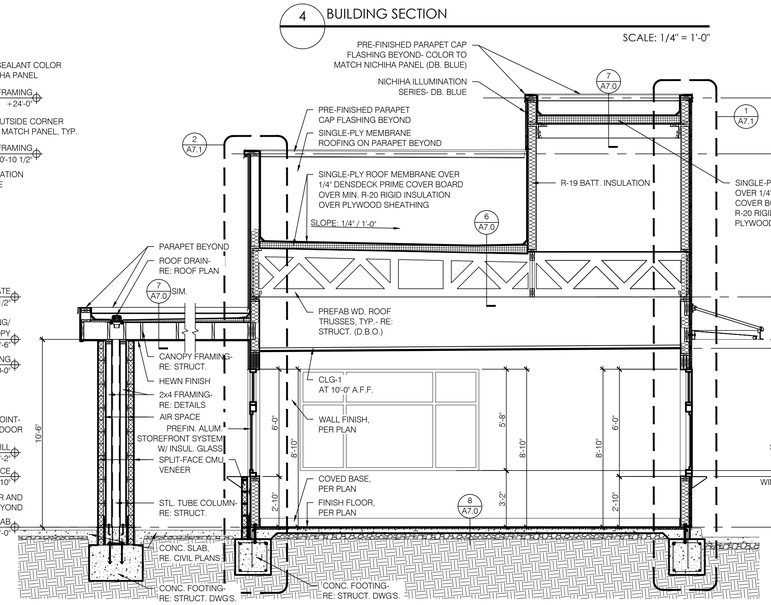

1 BUILDING SECTION

SCALE: 1/4" = 1'-0"

ARCHITECT
CORALIC, LLC
EDIN CORALIC
9700 MACKENZIE ROAD, STE. 222,
ST. LOUIS, MO 63123
p: 314.578.4953
e: edin@coralicarchitecture.com

STRUCTURAL ENGINEER
JAMES C. KREHER
JIM KREHER
208 N. MAIN STREET,
COLUMBIA, IL 62236
p: 618.281.8505
jimk@kreherengineering.com

MEP ENGINEER
Case Engineering
DARRELL R. CASE
796 MERUS CT.,
FENTON, MO 63026
T. 636.349.1600 F. 636.349.1730
dcase@caseengineeringinc.com

EDIN CORALIC ARCHITECT
A-2013031004 - EXP. 12-31-2021

STATE OF MISSOURI
EDIN CORALIC
NUMBER A-2013031004
ARCHITECT
10.11.2021

MISSOURI CERTIFICATE OF AUTHORITY NO. 2013041393

Project No: MO0102

Dutch Bros Coffee - New Freestanding Store

500 NW Chipman Road, Lee's Summit, Missouri 64086
for: Dutch Bros Coffee
110 SW 4th St.
Grants Pass, OR 97526

ISSUED FOR PERMIT:
10.11.2021

REV:	DATE:	DESCRIPTION:

SHEET NAME:

BUILDING SECTIONS

SHEET NUMBER:

A7.0

© 2020 DB Franchising USA, LLC

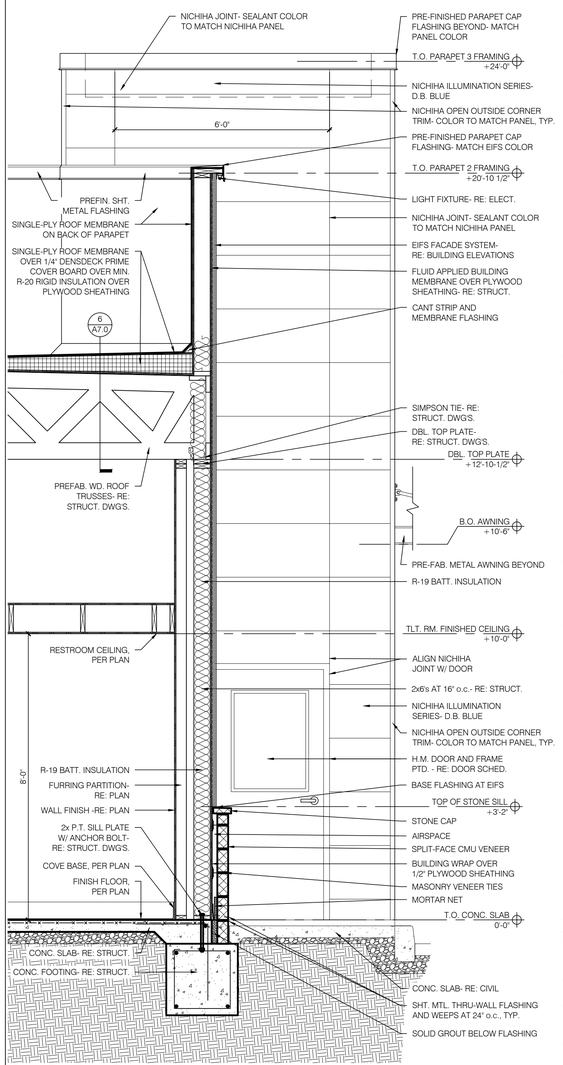

4 WALL SECTION

SCALE: 1/2" = 1'-0"

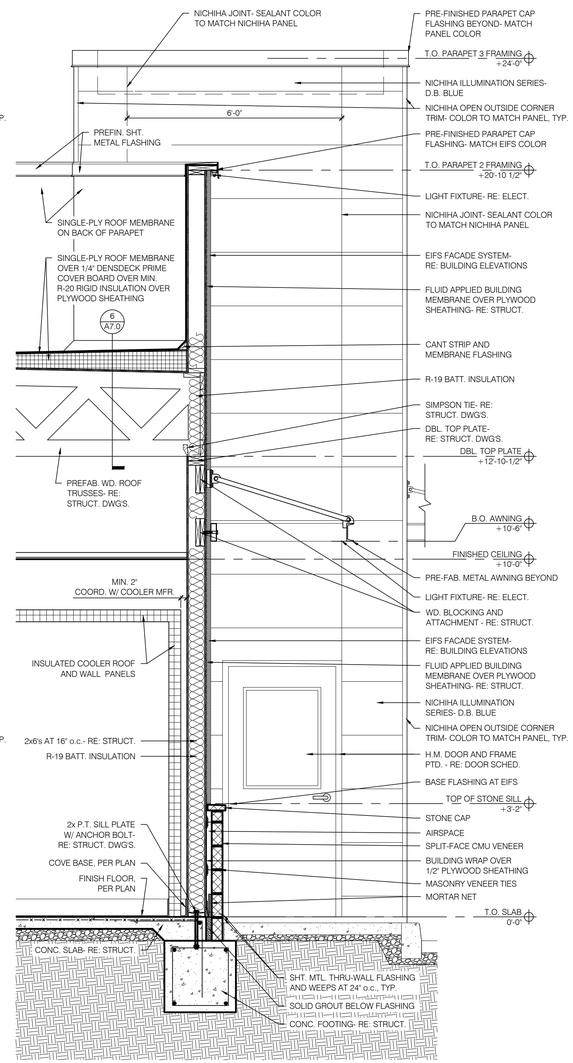

3 WALL SECTION

SCALE: 1/2" = 1'-0"

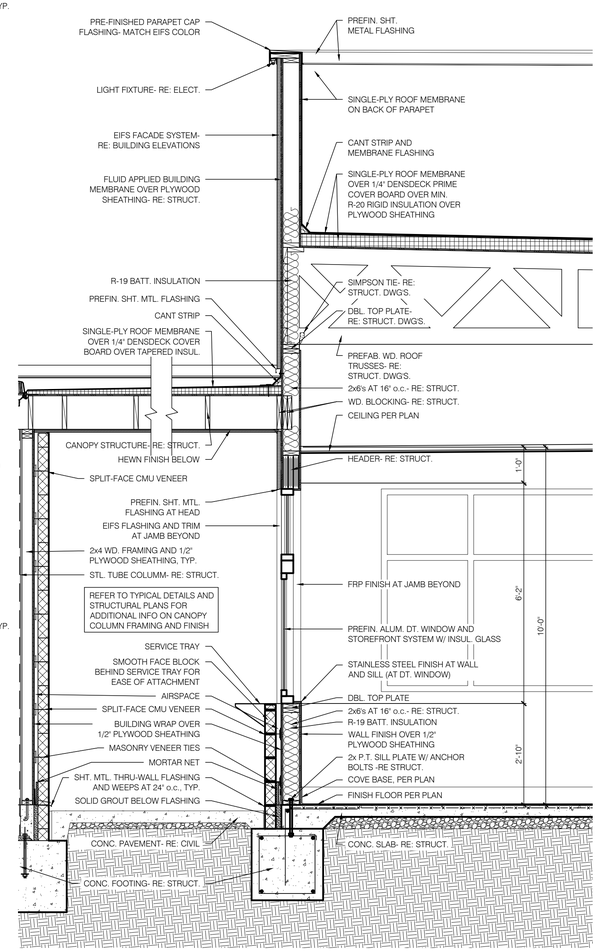

2 WALL SECTION

SCALE: 1/2" = 1'-0"

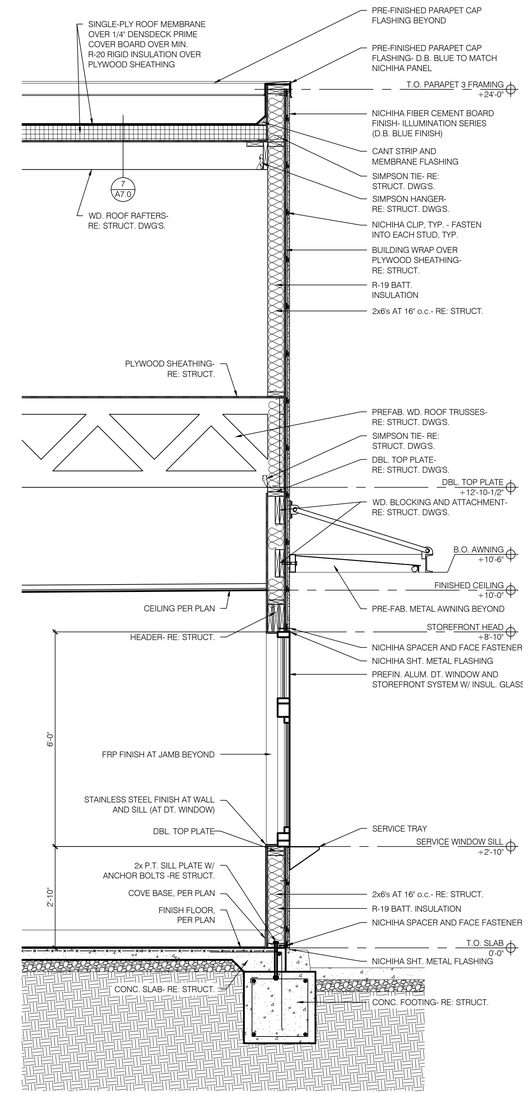

1 WALL SECTION

SCALE: 1/2" = 1'-0"

DUTCH BROS

CORALIC ARCHITECTURE

ARCHITECT
CORALIC, LLC
EDIN CORALIC
9700 MACKENZIE ROAD, STE. 222,
ST. LOUIS, MO 63123
p: 314.578.4953
e: edin@coralicarchitecture.com

STRUCTURAL ENGINEER
JAMES C. KREHER
JIM KREHER
208 N. MAIN STREET,
COLUMBIA, IL 62236
p: 618.281.8505
jimk@kreherengineering.com

MEP ENGINEER
Case Engineering
DARRELL R. CASE
796 MERUS CT.,
FENTON, MO 63026
T. 636.349.1600 F. 636.349.1730
dcase@caseengineeringinc.com

EDIN CORALIC ARCHITECT
A-2013031004 - EXP. 12-31-2021

STATE OF MISSOURI
EDIN CORALIC
NUMBER A-2013031004
ARCHITECT
10.11.2021

MISSOURI CERTIFICATE OF AUTHORITY NO. 2013041393

Project No: MO0102

Dutch Bros Coffee - New Freestanding Store

500 NW Chipman Road. Lee's Summit, Missouri 64086
for: Dutch Bros Coffee
110 SW 4th St.
Grants Pass, OR 97526

ISSUED FOR PERMIT:
10.11.2021

REV:	DATE:	DESCRIPTION:

SHEET NAME:

WALL SECTIONS

SHEET NUMBER:

A7.1

© 2020 DB Franchising USA, LLC

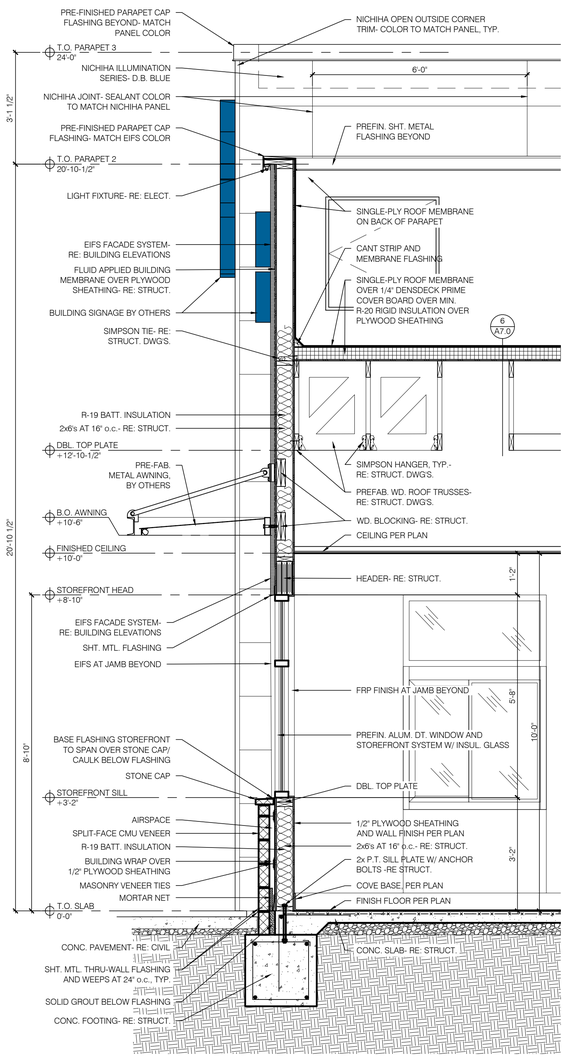

4 WALL SECTION

SCALE: 1/2" = 1'-0"

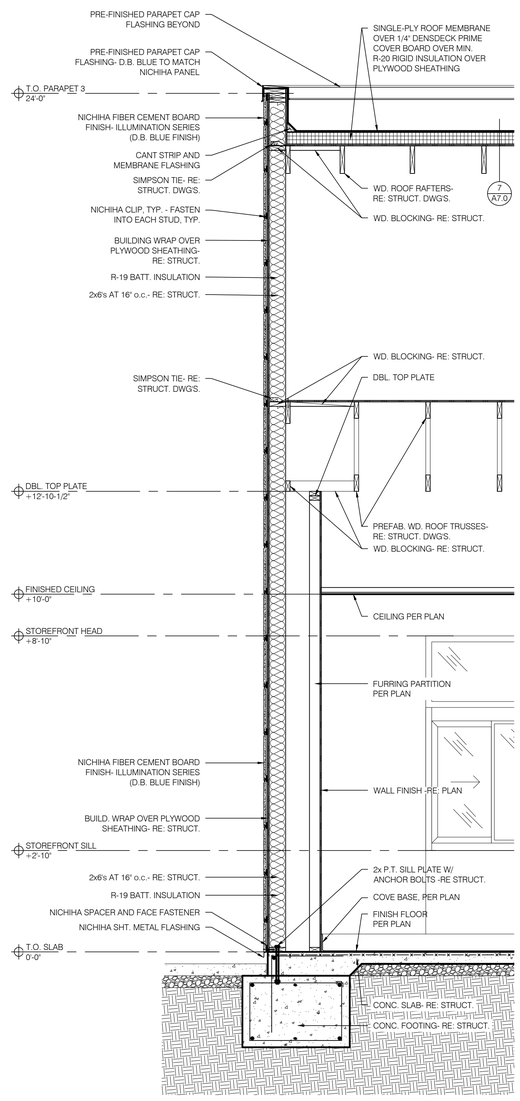

3 WALL SECTION

SCALE: 1/2" = 1'-0"

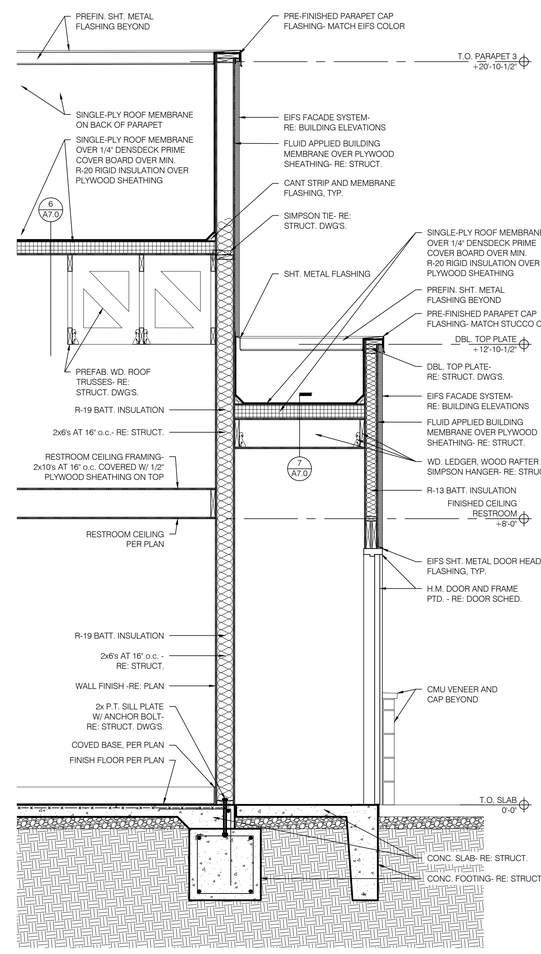

2 WALL SECTION

SCALE: 1/2" = 1'-0"

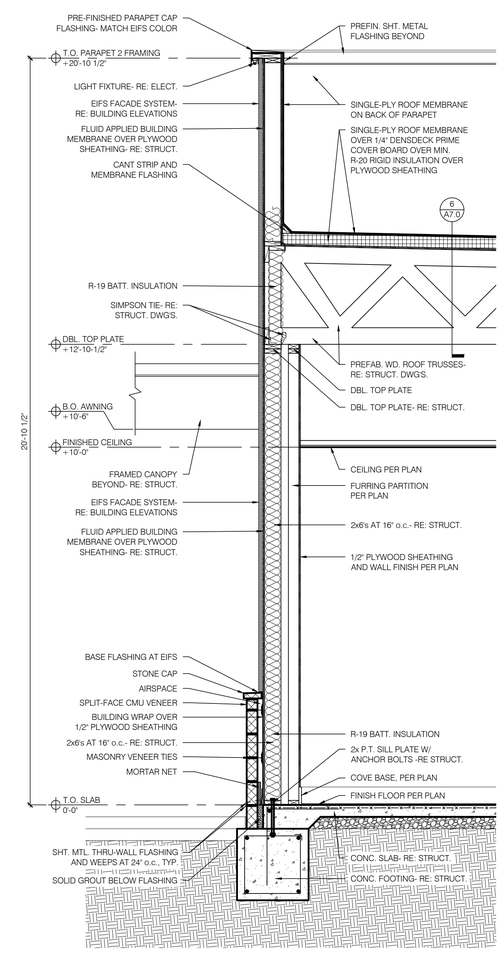

1 WALL SECTION

SCALE: 1/2" = 1'-0"

DUTCH BROS COFFEE

CORALIC ARCHITECTURE

ARCHITECT
CORALIC, LLC
EDIN CORALIC
9700 MACKENZIE ROAD, STE. 222,
ST. LOUIS, MO 63123
p: 314.578.4953
e: edin@coralicarchitecture.com

STRUCTURAL ENGINEER
JAMES C. KREHER
JIM KREHER
208 N. MAIN STREET,
COLUMBIA, IL 62236
p: 618.281.8505
jimk@kreherengineering.com

MEP ENGINEER
Case Engineering
DARRELL R. CASE
796 MERUS CT.,
FENTON, MO 63026
T. 636.349.1600 F. 636.349.1730
dcase@caseengineeringinc.com

EDIN CORALIC ARCHITECT
A-2013031004 - EXP. 12-31-2021

STATE OF MISSOURI
EDIN CORALIC
NUMBER A-2013031004
ARCHITECT

10.11.2021

MISSOURI CERTIFICATE OF AUTHORITY NO. 2013041393

Project No: MO0102

Dutch Bros Coffee - New Freestanding Store

500 NW Chipman Road, Lee's Summit, Missouri 64086
for: Dutch Bros Coffee
110 SW 4th St.
Grants Pass, OR 97526

ISSUED FOR PERMIT:
10.11.2021

REV:	DATE:	DESCRIPTION:

SHEET NAME:

WALL SECTIONS

SHEET NUMBER:

A7.2

© 2020 DB Franchising USA, LLC

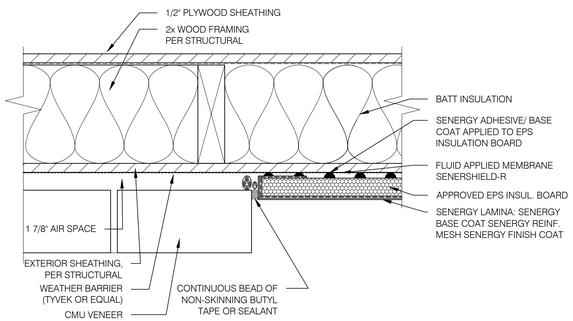

13 CMU VENEER TO EIFS ENLARGED PLAN DETAIL

SCALE: 3" = 1'-0"

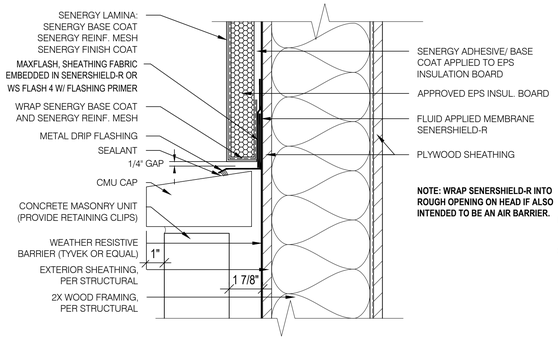

12 CMU VENEER SILL AT EIFS BASE

SCALE: 3" = 1'-0"

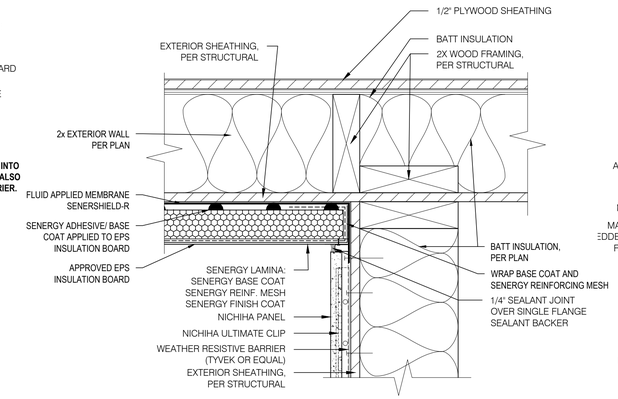

11 EIFS TO NICHIHA ENLARGED PLAN DETAIL

SCALE: 3" = 1'-0"

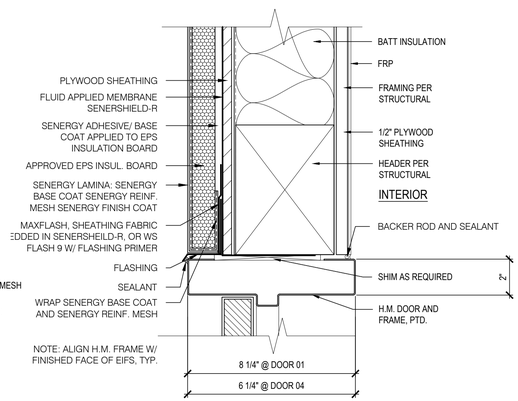

10 H.M. DOOR HEAD @ EIFS (JAMB SIMILAR)

SCALE: 3" = 1'-0"

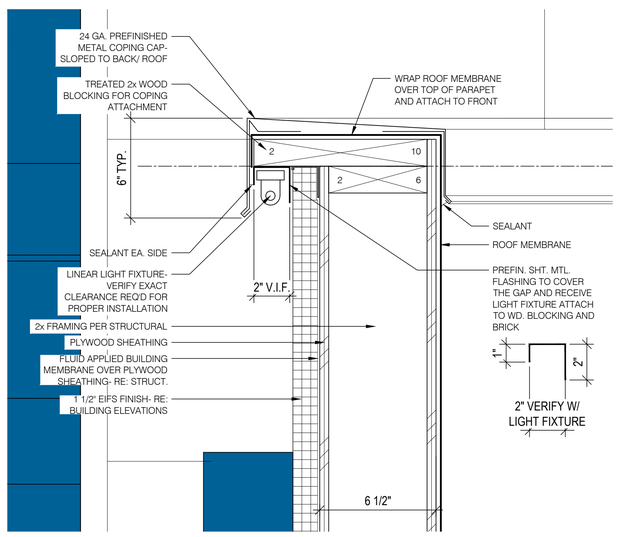

9 PARAPET DETAIL AT EIFS (PARAPET 2)

SCALE: 3" = 1'-0"

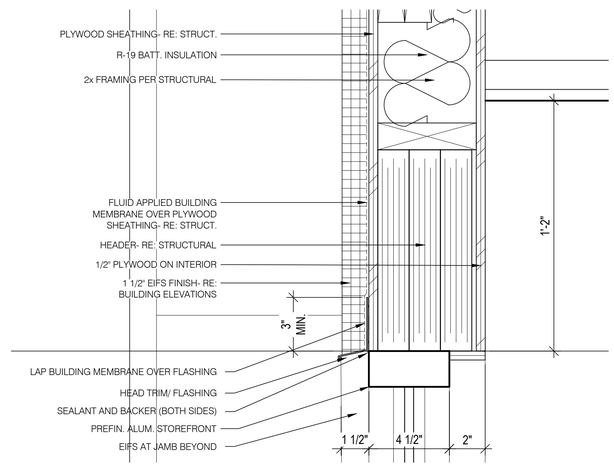

8 WINDOW HEAD DETAIL AT EIFS

SCALE: 3" = 1'-0"

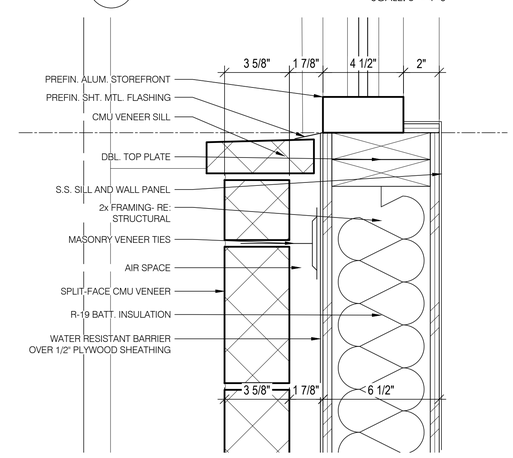

7 WINDOW SILL DETAIL AT CMU VENEER

SCALE: 3" = 1'-0"

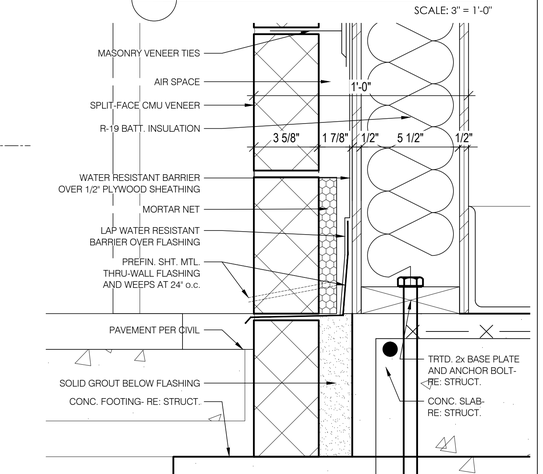

6 CMU VENEER BASE

SCALE: 3" = 1'-0"

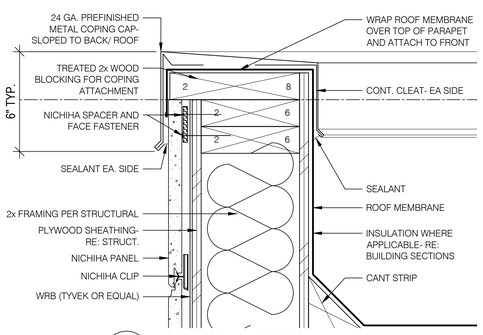

5 NICHIHA - PARAPET DETAIL

SCALE: 3" = 1'-0"

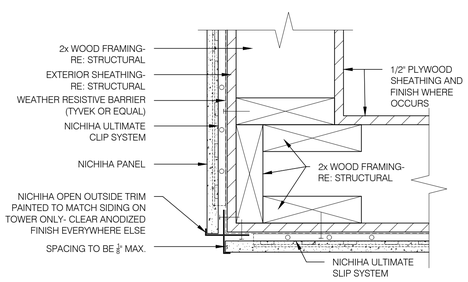

4 NICHIHA FIBER CEMENT BOARD SIDING - OUTSIDE CORNER

SCALE: 3" = 1'-0"

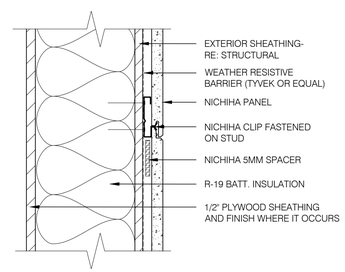

3 NICHIHA FIBER CEMENT BOARD HORIZONTAL JOINT DETAIL

SCALE: 3" = 1'-0"

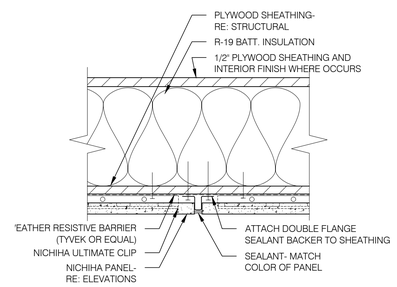

2 NICHIHA VERTICAL JOINT DETAIL

SCALE: 3" = 1'-0"

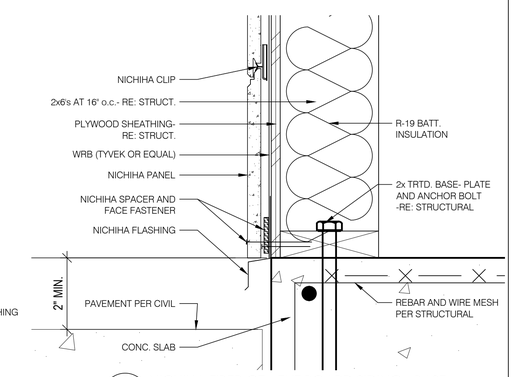

1 NICHIHA FIBER CEMENT BOARD SIDING - BASE

SCALE: 3" = 1'-0"

DUTCH BROS COFFEE

CORALIC ARCHITECTURE

ARCHITECT
CORALIC, LLC
EDIN CORALIC
9700 MACKENZIE ROAD, STE. 222,
ST. LOUIS, MO 63123
p: 314.578.4953
e: edin@coralicarchitecture.com

STRUCTURAL ENGINEER
JAMES C. KREHER
JIM KREHER
208 N. MAIN STREET,
COLUMBIA, IL 62236
p: 618.281.8505
jimk@kreherengineering.com

MEP ENGINEER
Case Engineering
DARRELL R. CASE
796 MERUS CT.,
FENTON, MO 63026
T. 636.349.1600 F. 636.349.1730
dcase@caseengineeringinc.com

EDIN CORALIC ARCHITECT
A-2013031004 - EXP. 12-31-2021

STATE OF MISSOURI
EDIN CORALIC
NUMBER A-2013031004
ARCHITECT

10.11.2021

MISSOURI CERTIFICATE OF AUTHORITY NO. 2013041393

Project No: MO0102

Dutch Bros Coffee - New Freestanding Store

500 NW Chipman Road. Lee's Summit, Missouri 64086
for: Dutch Bros Coffee
110 SW 4th St.
Grants Pass, OR 97526

ISSUED FOR PERMIT:
10.11.2021

REV:	DATE:	DESCRIPTION:

SHEET NAME:

BUILDING DETAILS

SHEET NUMBER:

A8.0

© 2020 DB Franchising USA, LLC

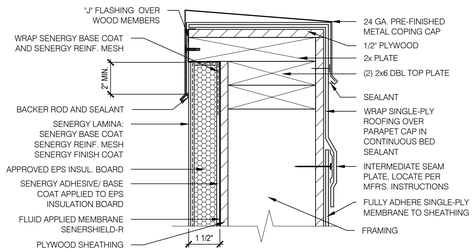

17 PARAPET 1 DETAIL- EIFS

SCALE: 3" = 1'-0"

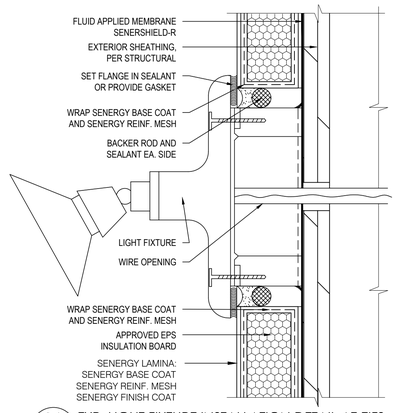

16 TYP. LIGHT FIXTURE INSTALLATION DETAIL AT EIFS

SCALE: 6" = 1'-0"

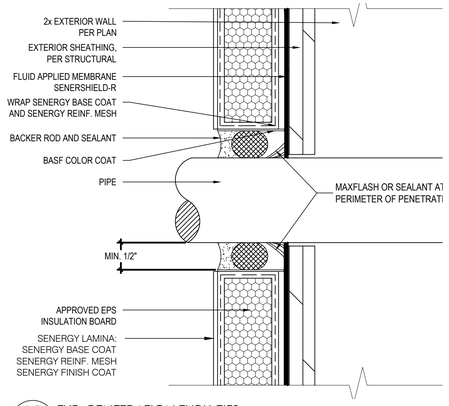

15 TYP. PENETRATION THRU EIFS

SCALE: 6" = 1'-0"

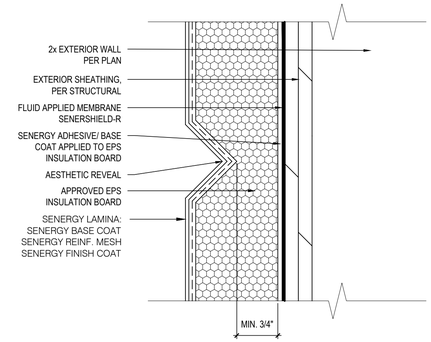

14 TYP. EIFS V-GROOVE DETAIL (1 1/2" EPS INSULATION)

SCALE: 6" = 1'-0"

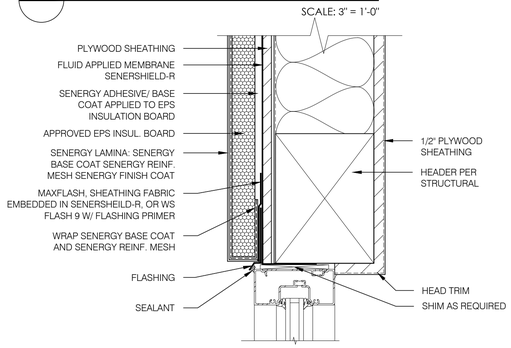

13 STOREFRONT HEAD @ EIFS

SCALE: 3" = 1'-0"

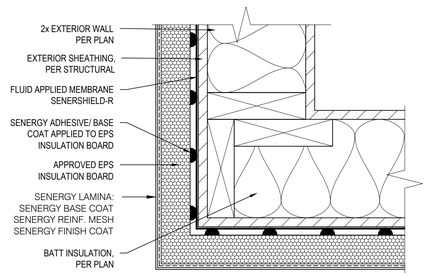

12 TYP. EIFS OUTSIDE CORNER DETAIL

SCALE: 3" = 1'-0"

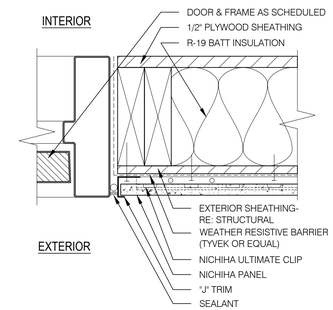

11 H.M. DOOR JAMB @ NICHIHA SIDING PANEL

SCALE: 3" = 1'-0"

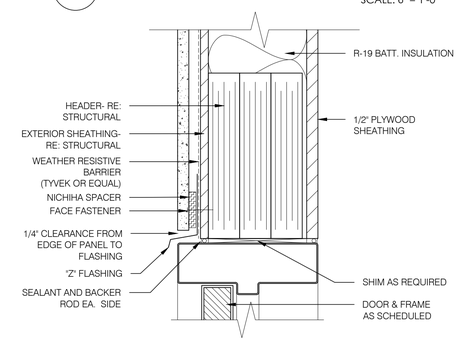

10 H.M. DOOR HEAD @ NICHIHA SIDING PANEL

SCALE: 3" = 1'-0"

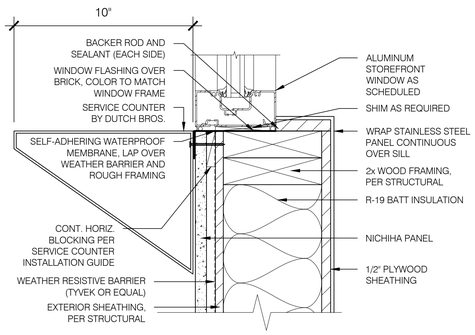

9 SERVICE COUNTER @ DT. WINDOW WINDOW - W/ NICHIHA

SCALE: 3" = 1'-0"

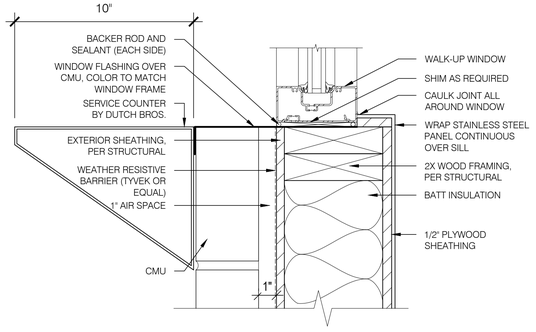

8 SERVICE COUNTER @ WALK-UP WINDOW - W/ CMU

SCALE: 3" = 1'-0"

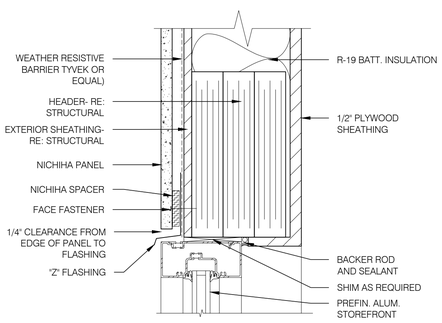

7 STOREFRONT HEAD @ NICHIHA SIDING

SCALE: 3" = 1'-0"

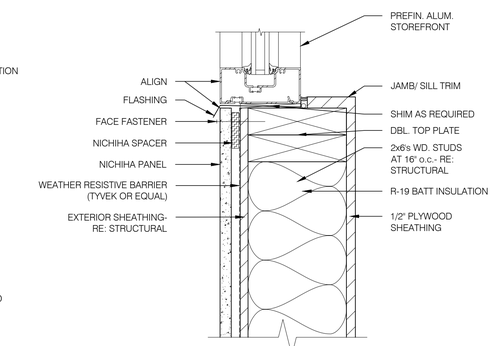

6 STOREFRONT SILL @ NICHIHA SIDING

SCALE: 3" = 1'-0"

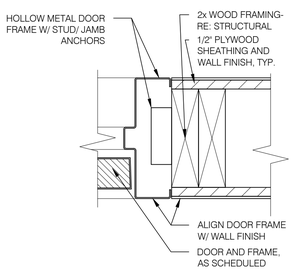

5 INTERIOR H.M. DOOR JAMB DETAIL

SCALE: 3" = 1'-0"

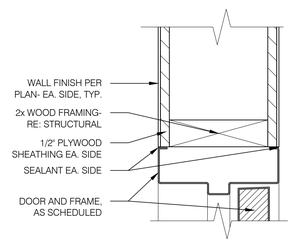

4 INTERIOR H.M. DOOR HEAD DETAIL

SCALE: 3" = 1'-0"

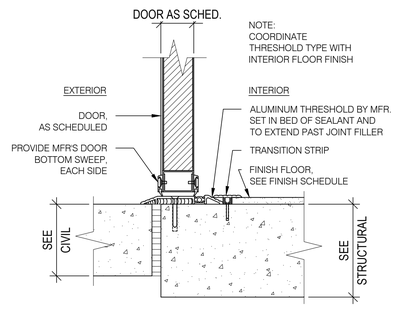

3 H.M. DOOR THRESHOLD DETAIL

SCALE: 3" = 1'-0"

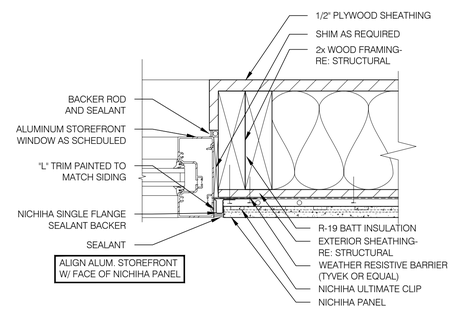

2 STOREFRONT JAMB @ NICHIHA PANEL

SCALE: 3" = 1'-0"

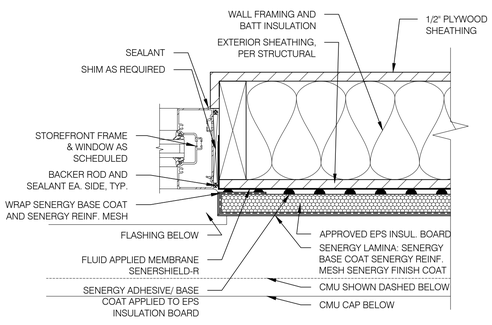

1 STOREFRONT JAMB @ EIFS

SCALE: 3" = 1'-0"

DUTCH BROS

CORALIC ARCHITECTURE

ARCHITECT
CORALIC, LLC
EDIN CORALIC
9700 MACKENZIE ROAD, STE. 222,
ST. LOUIS, MO 63123
p: 314.578.4953
e: edin@coralicarchitecture.com

STRUCTURAL ENGINEER
JAMES C. KREHER
JIM KREHER
208 N. MAIN STREET,
COLUMBIA, IL 62236
p: 618.281.8505
jimk@kreherengineering.com

MEP ENGINEER
Case Engineering
DARRELL R. CASE
796 MERUS CT.,
FENTON, MO 63026
T. 636.349.1600 F. 636.349.1730
dcase@caseengineeringinc.com

EDIN CORALIC ARCHITECT
A-2013031004 - EXP. 12-31-2021

STATE OF MISSOURI
EDIN CORALIC
NUMBER A-2013031004
ARCHITECT
10.11.2021

MISSOURI CERTIFICATE OF AUTHORITY NO. 2013041393

Project No: MO0102

Dutch Bros Coffee - New Freestanding Store

500 NW Chipman Road, Lee's Summit, Missouri 64086
for: Dutch Bros Coffee
110 SW 4th St.
Grants Pass, OR 97526

ISSUED FOR PERMIT:
10.11.2021

REV:	DATE:	DESCRIPTION:

SHEET NAME:

WINDOW AND DOOR DETAILS

SHEET NUMBER:

A8.1

© 2020 DB Franchising USA, LLC

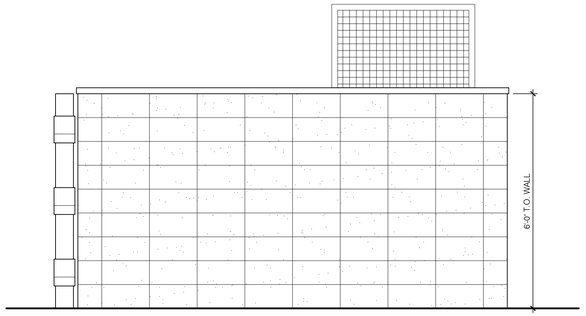

5 TRASH ENCLOSURE SIDE ELEVATION

SCALE: 1/2" = 1'-0"

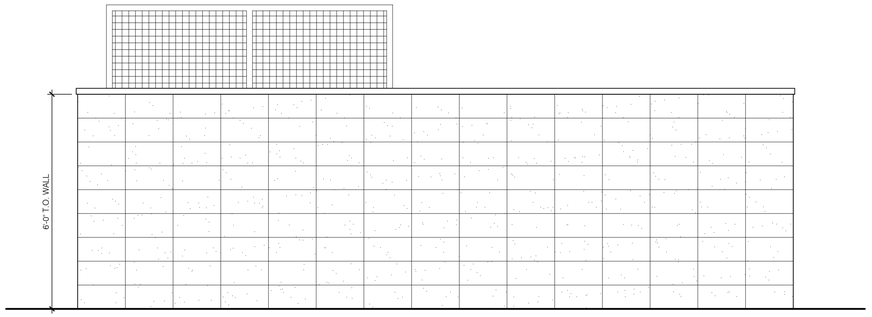

4 TRASH ENCLOSURE SIDE ELEVATION

SCALE: 1/2" = 1'-0"

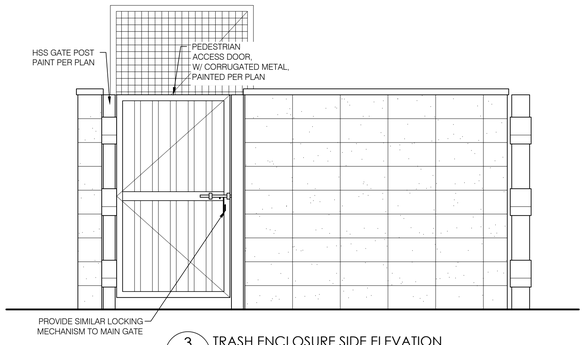

3 TRASH ENCLOSURE SIDE ELEVATION

SCALE: 1/2" = 1'-0"

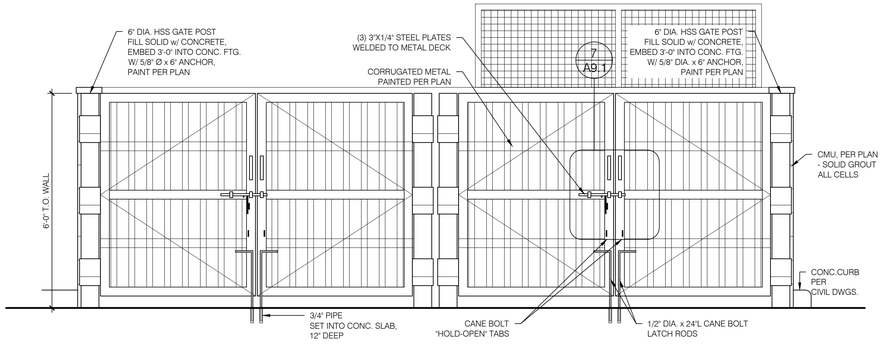

2 TRASH ENCLOSURE FRONT ELEVATION

SCALE: 1/2" = 1'-0"

TRASH ENCLOSURE GENERAL NOTES:

1. REFER TO STRUCTURAL FOR MASONRY, CONCRETE, STRUCTURAL STEEL AND REINFORCING STEEL FOR SPECIFICATIONS.
2. PROVIDE LOCKING MECHANISM ON GATES AND PEDESTRIAN GATE
3. PROVIDE SITE LIGHTING AT TRASH ENCLOSURE. MIN. 5 FOOT CANDLE.
4. GATES TO BE BUILT WITH 3"x2" SQUARE STEEL TUBING WITH ALL JOINTS FULLY WELDED TOGETHER AND 1 CROSS MEMBER PER GATE. FRAME TO BE PRIMED AND PAINTED PER PLAN.

TRASH ENCLOSURE MATERIALS

ID	MATERIAL	MANUFACTURER	COLOR	NOTES
3	CMU BLOCK	WILLAMETTE-GRAYSTONE	CHARCOAL	SPLIT FACE, 8x16x8; 8x8x8 AS NECESARY
	CMU CAP	WILLAMETTE-GRAYSTONE	CHARCOAL	12x16x2
PT-2	PAINT	SHERWIN-WILLIAMS	-	BLDG DB DARK GRAY, GATES BODY
PT-3	PAINT	SHERWIN-WILLIAMS	-	BLDG DB BLUE, GATE FRAMES & POSTS

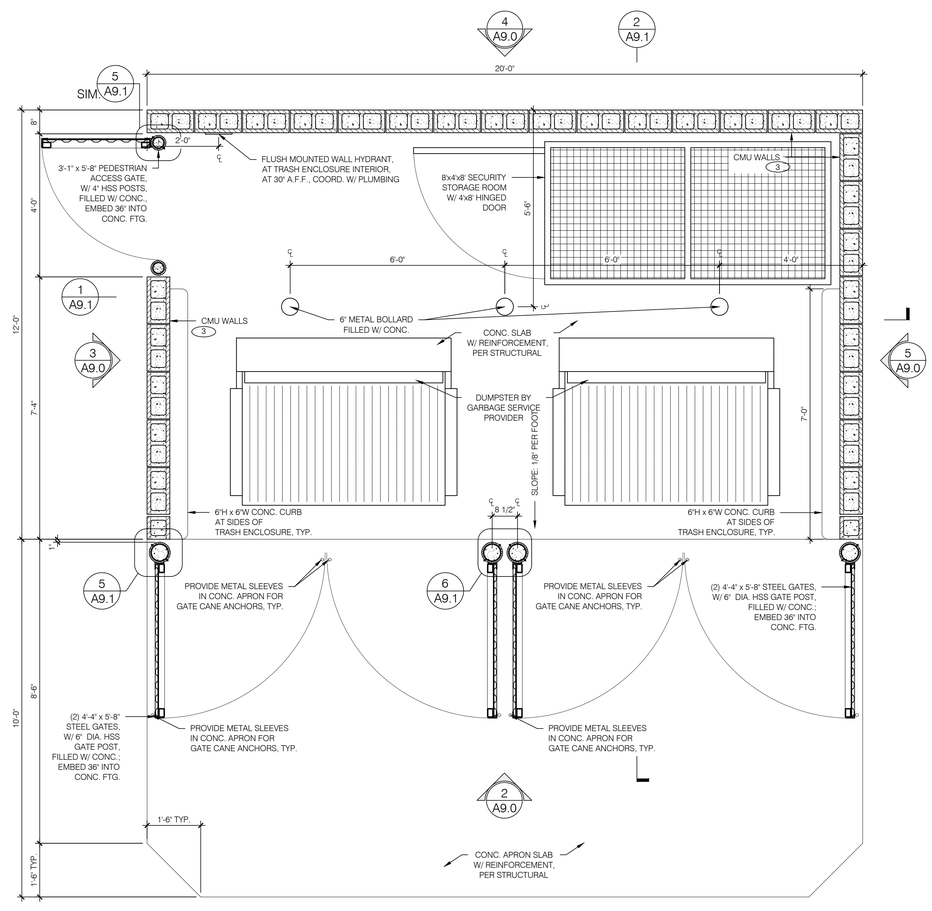

1 TRASH ENCLOSURE PLAN

SCALE: 1/2" = 1'-0"

ARCHITECT
CORALIC, LLC
EDIN CORALIC
9700 MACKENZIE ROAD, STE. 222,
ST. LOUIS, MO 63123
p: 314.578.4953
e: edin@coralicarchitecture.com

STRUCTURAL ENGINEER
JAMES C. KREHER
JIM KREHER
208 N. MAIN STREET,
COLUMBIA, IL 62236
p: 618.281.8505
jimk@kreherengineering.com

MEP ENGINEER
Case Engineering
DARRELL R. CASE
796 MERUS CT.,
FENTON, MO 63026
T. 636.349.1600 F. 636.349.1730
dcase@caseengineeringinc.com

EDIN CORALIC ARCHITECT
A-2013031004 - EXP. 12-31-2021

STATE OF MISSOURI
EDIN CORALIC
NUMBER
A-2013031004
ARCHITECT
10.11.2021

MISSOURI CERTIFICATE OF
AUTHORITY NO. 2013041393

Project No: MO0102

Dutch Bros Coffee - New Freestanding Store

500 NW Chipman Road, Lee's Summit, Missouri 64086
for: Dutch Bros Coffee
110 SW 4th St.
Grants Pass, OR 97526

ISSUED FOR PERMIT:
10.11.2021

REV:	DATE:	DESCRIPTION:

SHEET NAME:

TRASH ENCLOSURE
PLAN/ ELEVATIONS

SHEET NUMBER:

A9.0

© 2020 DB Franchising USA, LLC

TRASH ENCLOSURE GENERAL NOTES:

1. REFER TO STRUCTURAL FOR MASONRY, CONCRETE, STRUCTURAL STEEL AND REINFORCING STEEL FOR SPECIFICATIONS.
2. PROVIDE LOCKING MECHANISM ON GATES AND PEDESTRIAN GATE
3. PROVIDE SITE LIGHTING AT TRASH ENCLOSURE. MIN. 5 FOOT CANDLE.
4. GATES TO BE BUILT WITH 3"x2" SQUARE STEEL TUBING WITH ALL JOINTS FULLY WELDED TOGETHER AND 1 CROSS MEMBER PER GATE. FRAME TO BE PRIMED AND PAINTED PER PLAN.

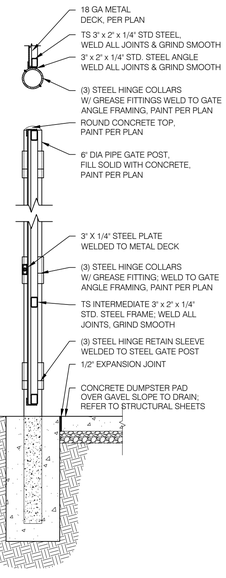

3 TRASH ENCLOSURE GATE JAMB DETAIL

SCALE: 1/2" = 1'-0"

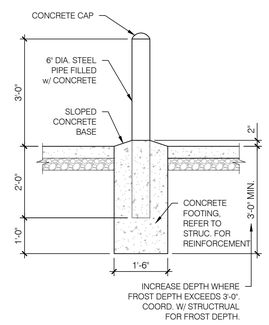

4 BOLLARD DETAIL

SCALE: 1/2" = 1'-0"

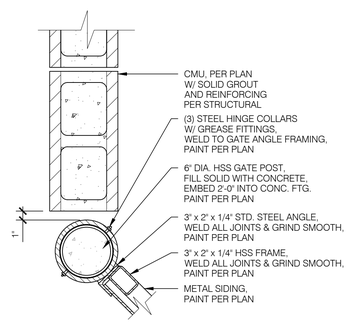

5 TRASH ENCLOSURE GATE JAMB DETAIL

SCALE: 1-1/2" = 1'-0"

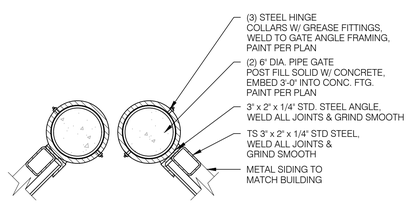

6 TRASH ENCLOSURE GATE JAMB DETAIL

SCALE: 1-1/2" = 1'-0"

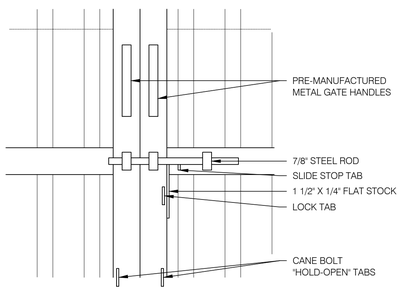

7 TRASH ENCLOSURE GATE LOCKING HANDLE

SCALE: 1-1/2" = 1'-0"

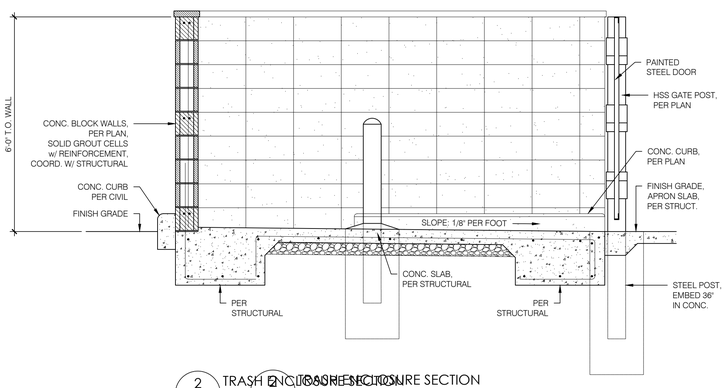

2 TRASH ENCLOSURE SECTION

SCALE: 1/2" = 1'-0"

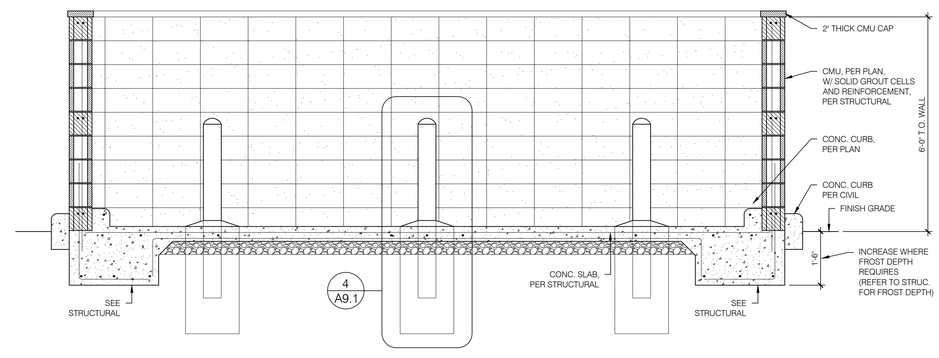

1 TRASH ENCLOSURE DETAIL

SCALE: 1/2" = 1'-0"

ARCHITECT
CORALIC, LLC
EDIN CORALIC
9700 MACKENZIE ROAD, STE. 222,
ST. LOUIS, MO 63123
p: 314.578.4953
e: edin@coralicarchitecture.com

STRUCTURAL ENGINEER
JAMES C. KREHER
JIM KREHER
208 N. MAIN STREET,
COLUMBIA, IL 62236
p: 618.281.8505
jimk@kreherengineering.com

MEP ENGINEER
Case Engineering
DARRELL R. CASE
796 MERUS CT.,
FENTON, MO 63026
T. 636.349.1600 F. 636.349.1730
dcase@caseengineeringinc.com

EDIN CORALIC ARCHITECT
A-2013031004 - EXP. 12-31-2021

STATE OF MISSOURI
EDIN CORALIC
NUMBER A-2013031004
ARCHITECT
10.11.2021

MISSOURI CERTIFICATE OF AUTHORITY NO. 2013041393

Project No: MO0102

Dutch Bros Coffee - New Freestanding Store

500 NW Chipman Road. Lee's Summit, Missouri 64086
for: Dutch Bros Coffee
110 SW 4th St.
Grants Pass, OR 97526

ISSUED FOR PERMIT:
10.11.2021

REV:	DATE:	DESCRIPTION:

SHEET NAME:

TRASH ENCLOSURE DETAILS

SHEET NUMBER:

A9.1

© 2020 DB Franchising USA, LLC

GENERAL NOTES:

THE GENERAL NOTES ARE NOT A SUBSTITUTE OR A REPLACEMENT TO THE PROJECT SPECIFICATIONS. THESE NOTES ARE INTENDED AS A GUIDE TO THE DESIGN AND/OR CONSTRUCTION REQUIREMENTS ESTABLISHED FOR THIS PROJECT. NO CONTRACTOR SHOULD ATTEMPT TO DESIGN, BID, OR CONSTRUCT ANY PORTION OF THE WORK HEREIN WITHOUT CONSULTING THE PROJECT SPECIFICATIONS. WHERE CONFLICTS OCCUR BETWEEN THESE NOTES AND THE SPECIFICATIONS THE MORE STRINGENT REQUIREMENTS SHALL APPLY UNLESS A WRITTEN CLARIFICATION IS ISSUED BY THE STRUCTURAL ENGINEER. VARIATION IN THE FIELD CONDITIONS RELATIVE TO THE CONTRACT DOCUMENTS SHALL BE REPORTED TO THE ARCHITECT. WORK SHALL NOT PROGRESS UNTIL WRITTEN PERMISSION FROM THE ARCHITECT IS OBTAINED.

CODES AND STANDARDS

THE IBC/2018 ASCE 7-16

"BUILDING CODE REQUIREMENTS FOR REINFORCED CONCRETE (ACI 318-14)"AMERICAN CONCRETE INSTITUTE 1999 AND ANY FOLLOWING REVISIONS "MANUAL OF STANDARD PRACTICE", CONCRETE REINFORCING STEEL INSTITUTE 2009.

"STRUCTURAL WELDING CODE-STEEL (AWS D1.1-15)"AND "STRUCTURAL WELDING CODE - REINFORCING STEEL (AWS D1.4-17)". AMERICAN WELDING SOCIETY.

"NORTH AMERICAN SPECIFICATIONS FOR THE DESIGN OF COLD-FORMED STEEL STRUCTURES", AMERICAN IRON AND STEEL INSTITUTE (AISI) 2016 EDITION.

"BUILDING CODE REQUIREMENTS FOR CONCRETE MASONRY STRUCTURES AND COMMENTARY - (TMS 402/602-16)

NATIONAL DESIGN SPECIFICATION FOR WOOD CONSTRUCTION 2018; DESIGN VALUES FOR WOOD CONSTRUCTION (NDS-18)

DESIGN CRITERIA

1. ROOF LOADS:
   - DEAD LOAD: 25 PSF
   - LIVE LOAD: 20 PSF
   - RAIN LOAD: 16 PSF
   - SNOW LOAD: FLAT ROOFS = Is*Pg
   - GROUND SNOW: 20 PSF
   - SNOW EXPOSURE FACTOR: Ce=1.0
   - SNOW THERMAL FACTOR: Ct=1.0
   - SNOW EXPOSURE IMPORTANCE: Is=1.0

2. WIND LOAD:
   - BASIC WIND SPEED: 111 MPH
   - IMPORTANCE FACTOR: 1.0
   - EXPOSURE FACTOR: C
   - BUILDING ENCLOSURER: FULLY ENCLOSED

WIND LOAD (+ DENOTES WINDWARD LOAD) (- DENOTES LEEWARD LOAD)

(MWFRS LOW-RISE)
MAX PRESSURE ON WALL = +20.0 psf
MAX PRESSURE ON ROOF = -23.0 psf

(WALL COMPONENTS & CLADDING)
INTERIOR WALL (INTERIOR ZONE 4 OF WALLS) = -27.0 PSF
END ZONE WALL (END ZONE 5 OF WALL) = -33.0 PSF

(ROOF COMPONENTS & CLADDING)
ZONES 1 MAX LOAD = -43.0 PSF
ZONES 2 MAX LOAD = -57.0 PSF
ZONES 3 MAX LOAD = -57.0 PSF

3. SEISMIC LOAD:
   - OCCUPANCY CATEGORY: II
   - SEISMIC IMPORTANCE FACTOR: I_E=1.0
   - MAPPED SPECTRAL COEFFICIENTS: S_S =0.099g: S_1 =0.068g
   - SPECTRAL RESPONSE COEFFICIENTS: S_{DS}=0.086g: S_{D1}=0.068g
   - SOIL SITE CLASS: C
   - SEISMIC DESIGN CATEGORY: B
   - EQUIVALENT LATERAL FORCE PROCEDURE: V=Cs W

BEARING WALL SYSTEM

LIGHT FRAMED WALLS WITH WOOD SHEAR PANELS
- RESPONSE FACTOR: R=6.5
- DEFLECTION AMPLIFICATION FACTOR: Cd=4.0
- SYSTEM OVERSTRENGTH FACTOR: Ω_0=3.0

CONSTRUCTION AND SAFETY:

1. THE CONTRACTOR IS SOLELY RESPONSIBLE FOR ALL SAFETY REGULATIONS, PROGRAMS AND PRECAUTIONS RELATED TO ALL WORK ON THIS PROJECT
2. THE CONTRACTOR IS SOLELY RESPONSIBLE FOR THE PROTECTION OF PERSONS AND PROPERTY EITHER ON OR ADJACENT TO THE PROJECT AND SHALL PROTECT SAME AGAINST INJURY, DAMAGE OR LOSS
3. MEANS AND METHODS OF CONSTRUCTION AND ERECTION OF STRUCTURAL MATERIALS ARE SOLELY THE CONTRACTOR'S RESPONSIBILITY
4. THE STRUCTURAL DRAWINGS ARE INTENDED TO BE USED IN CONJUNCTION WITH THE DRAWINGS OF OTHER CONSULTANTS AND TRADES. THE CONTRACTOR IS RESPONSIBLE FOR COORDINATING THE VARIOUS REQUIREMENTS.
5. NO CHANGES IN SIZE, DIMENSION OR LOCATION, SHALL BE MADE IN ANY STRUCTURAL ELEMENTS WITHOUT WRITTEN APPROVAL OF THE STRUCTURAL ENGINEER
6. CONTRACTOR SHALL VERIFY ALL EXISTING CONDITIONS PRIOR TO ORDERING MATERIALS OR PROCEEDING WITH NEW WORK IN AREAS AFFECTED BY EXISTING CONDITIONS. STRUCTURAL ENGINEER SHALL BE INFORMED IN WRITING OF CONFLICTS BETWEEN EXISTING AND PROPOSED NEW CONSTRUCTION.
7. CONTRACTOR IS RESPONSIBLE FOR COORDINATING ALL DIMENSIONS SHOWN ON THE CONTRACT DOCUMENTS. INCONSISTENCIES ON THE STRUCTURAL DRAWINGS OR BETWEEN THE STRUCTURAL DRAWINGS AND ANY OTHER CONTRACT, SHOP FABRICATION, OR OTHER DRAWINGS OR INFORMATION SHALL BE BROUGHT TO THE ATTENTION OF THE STRUCTURAL ENGINEER PRIOR TO PROCEEDING WITH AFFECTED WORK.
8. DO NOT SCALE THESE DRAWINGS, USE THE DIMENSIONS SHOWN.
9. THE CONTRACTOR IS RESPONSIBLE FOR LIMITING THE AMOUNT OF CONSTRUCTION LOAD IMPOSED ON THE STRUCTURE. SUCH LOADS SHALL NOT EXCEED THE CAPACITY OF THE STRUCTURE AT ANY TIME.
10. THE STRUCTURE IS DESIGNED TO FUNCTION AS A UNIT UPON COMPLETION AND ANY TEMPORARY BRACING FOR LOADS INDUCED DURING CONSTRUCTION OR SUPPORT REQUIRED TO ACCOMMODATE THE CONTRACTOR'S MEANS AND METHODS ARE THE RESPONSIBILITY OF THE CONTRACTOR.
11. THE CONTRACTOR SHALL INFORM THE STRUCTURAL ENGINEER, CLEARLY AND EXPLICITLY IN WRITING OF ANY DEVIATION OR SUBSTITUTION OF REQUIREMENTS OF THE CONTRACT DOCUMENTS. THE CONTRACTOR SHALL NOT BE RELIEVED OF ANY REQUIREMENTS OF THE CONTRACT DOCUMENTS BY VIRTUE OF THE STRUCTURAL ENGINEER'S REVIEW OF SHOP DRAWINGS, PRODUCT DATA, ETC. UNLESS THE CONTRACTOR HAS CLEARLY AND EXPLICITLY INFORMED THE STRUCTURAL ENGINEER IN WRITING OF ANY DEVIATIONS OR SUBSTITUTIONS AT TIME OF SUBMISSION, AND THE STRUCTURAL ENGINEER HAS GIVEN WRITTEN APPROVAL FOR THE SPECIFIC DEVIATIONS OR SUBSTITUTIONS.

THE PROFESSIONAL ENGINEERS SEAL AFFIXED TO THIS SHEET INDICATES THAT THE NAMED ENGINEER HAS PREPARED OR DIRECTED THE PREPARATION OF THE MATERIAL SHOWN ONLY ON THIS SHEET. OTHER DRAWINGS AND DOCUMENTS, NOT EXHIBITING THIS SEAL, SHALL NOT BE CONSIDERED PREPARED BY OR THE RESPONSIBILITY OF THE UNDERSIGNED. USE OF THE DRAWINGS WITHOUT THE PROFESSIONAL ENGINEERS SEAL IS PROHIBITED.
JOB NO. K21-002J

COPYRIGHT (C) 2021 KREHER ENGINEERING, INC. REPRODUCTION OF THIS DRAWING FOR SHOP DRAWINGS IS PERMITTED, BUT AT THE USERS RISK. THE USER SHALL REMOVE ALL SEALS, FIRM NAMES, TITLES, SHEET NUMBERS AND SHALL ASSUME FULL RESPONSIBILITY FOR THEIR ACCURACY, COMPLETENESS AND STATUS.

SUBMITTALS

1. SHOP DRAWING REVIEW:
   REVIEW OF SHOP DRAWING IS ONLY FOR CONFORMANCE WITH THE DESIGN CONCEPT OF THE PROJECT AND COMPLIANCE WITH THE INFORMATION GIVEN IN THE CONTRACT DOCUMENTS. THE CONTRACTOR IS RESPONSIBLE FOR DIMENSIONS TO BE CONFIRMED AND CORRELATED AT THE SITE; FOR INFORMATION THAT PERTAINS SOLELY TO THE FABRICATION PROCESSES OR TO THE MEANS, METHODS, TECHNIQUES, SEQUENCES, TEMPORARY SHORING BRACING AND PROCEDURES OF CONSTRUCTION; AND FOR COORDINATION OF WORK OF ALL TRADES.
2. SHOP DRAWINGS SHALL BE APPROVED BY THE ARCHITECT/ENGINEER OF RECORD PRIOR TO FABRICATION. FABRICATION OF ITEMS BEFORE APPROVAL WILL BE THE RESPONSIBILITY OF THE CONTRACTOR FOR ERRORS AND OMISSIONS.
3. CONCRETE MIX DESIGNS:
   SUBMIT WRITTEN REPORTS OF EACH PROPOSED CONCRETE MIX NOT LESS THAN 15 DAYS PRIOR TO THE START OF PLACEMENT. MIX DESIGNS SHALL INCLUDE WATER CEMENT RATIO, SLUMP, AND AIR CONTENT. SUBMITTAL SHALL BE PREPARED IN ACCORDANCE WITH ACI 301-84, CHAPTER 3 EXCEPT NOTED OTHERWISE IN THE PROJECT SPECIFICATIONS.
4. CONCRETE REINFORCING STEEL
   SUBMIT SHOP DRAWINGS FOR FABRICATION, BENDING, AND PLACEMENT OF CONCRETE REINFORCEMENT. COMPLY WITH ACI DETAILING MANUAL(SP-66) SHOWING BAR SCHEDULES, STIRRUP SPACING, DIAGRAMS OF BENT BARS, ARRANGEMENT OF CONCRETE REINFORCING. INCLUDE SPECIAL REINFORCEMENT REQUIRED AT OPENINGS THROUGH CONCRETE STRUCTURES. INCLUDE ALL ACCESSORIES SPECIFIED/REQUIRED TO SUPPORT REINFORCING
5. MASONRY WALL REINFORCING STEEL
   SUBMIT SHOP DRAWINGS FOR FABRICATION, BENDING, AND PLACEMENT OF MASONRY WALL REINFORCEMENT. COMPLY WITH ACI DETAILING MANUAL(SP-66) SHOWING BAR SCHEDULES, DIAGRAMS OF BENT BARS, BAR LAP SPLICES, AND SPACING OF REINFORCING. INCLUDE SPECIAL REINFORCEMENT REQUIRED AT OPENINGS, CONTROL JOINTS AND BEAM POCKETS. INCLUDE ALL ACCESSORIES SPECIFIED/REQUIRED TO SUPPORT REINFORCING
6. WOOD ROOF TRUSSES
   SUBMIT TRUSS SHOP DRAWINGS FOR REVIEW PRIOR TO THE FABRICATION PREPARED BY CONTRACTORS SUPPLIER FOR CONFORMANCE WITH DESIGN CONCEPT. SHOP DRAWING SHALL INCLUDE A PLAN LAYOUT SHOWING THE LOCATION OF ALL TRUSSES AND INCLUDE LOCATION OF METAL CONNECTORS GAUGE AND SIZE, LUMBER SPECIFICATIONS, PITCH, SPAN, DESIGN LOADS AND ALLOWABLE UNIT STRESS. INCLUDE PLANS FOR TEMPORARY ERECTION AND PERMANENT BRACING PER DESIGN CRITERIA LOADING, AND HANDLING AND AND ERECTION INSTRUCTIONS. ALL TRUSS DESIGNS SHALL BEAR THE NAME, SEAL AND/OR REGISTERED NUMBER OF A LICENSED PROFESSIONAL ENGINEER OF THE STATE IN WHICH THE BUILDING OCCURS. CONTRACTOR TO COORDINATE LOCATIONS OF ALL ROOF TRUSS POINT LOADS. MFR TO PROVIDE CONNECTION DETAILS. MFR TO PROVIDE DESIGNS FOR ALL TRUSS TO TRUSS CONNECTIONS WITH HANGERS NOTED ON SHOP DRAWINGS.

FOUNDATIONS

1. IT IS THE RESPONSIBILITY OF THE CONTRACTOR TO REVIEW THE GEOTECHNICAL REPORT PRIOR TO BIDDING FOR CONSTRUCTION PROCEDURES REQUIRED DUE TO EXISTING CONDITIONS SUCH AS PLASTIC SOILS, UNACCEPTABLE FILL, ETC.
2. CONTINUOUS WALL FOOTINGS HAVE BEEN PROPORTIONED FOR A NET ALLOWABLE SOIL BEARING PRESSURE OF 2500 PSF. SPREAD FOOTINGS HAVE BEEN PROPORTIONED FOR A NET ALLOWABLE SOIL BEARING PRESSURE OF 2500 PSF.
3. SOIL BEARING PRESSURE IS BASED ON THE GEOTECHNICAL REPORT DATED JULY 28, 2021 FURNISHED BY GSI ENGINEERING.
4. GEOTECHNICAL ENGINEER SHALL BE THE SOLE JUDGE AS TO THE SUITABILITY OF ALL FOUNDATION AND/OR SLAB BEARING STRATA.
5. CONTRACTOR SHALL REMOVE AND REPLACE UNACCEPTABLE SOILS IN ACCORDANCE WITH THE GEOTECHNICAL REPORT. ALL ORGANIC MATERIAL AND SOILS WHICH "PUMP" AFTER PROOF ROLLING WITH A FULLY LOADED TRUCK SHALL BE REMOVED.
6. BOTTOM OF FOOTINGS MUST EXTEND 1'-6' BELOW PRESENT GRADE OR INTO "ENGINEERED FILL" AND 2'-6' BELOW PROPOSED GRADE UNLESS NOTED OTHERWISE IN GEOTECHNICAL REPORT.
7. ENGINEERED FILL. ALL FILL MATERIAL SHALL BE SELECTED IN ACCORDANCE WITH THE GEOTECHNICAL REPORT. EXISTING ON SITE MATERIALS SUCH AS THE NEAR-SURFACE FILL SOILS (SILTS AND CLAYS) SHOULD NOT BE USED AS ENGINEERED FILL MATERIAL
8. UNLESS NOTED OTHERWISE IN GEOTECHNICAL REPORT, EARTH FILL PLACEMENT SHOULD BE COMPACTED TO A DRY DENSITY OF NOT LESS THAN 95% OF THE STANDARD PROCTOR, AND WELL GRADED GRANULAR FILL SHOULD BE COMPACTED TO DRY DENSITY OF NOT LESS THAN 100% OF THE STANDARD PROCTOR. FILL SHALL BE PLACED IN LAYERS NOT EXCEEDING A LOOSE THICKNESS OF 8 INCHES
9. GRADE BEAMS HAVING EARTH PLACED ON EACH SIDE SHALL BE FILLED SIMULTANEOUSLY TO MAINTAIN A COMMON ELEVATION
10. CONCRETE FOOTINGS PLACED IN EARTH TRENCHED FORMS SHALL BE FREE OF STANDING WATER AND FROST. CONCRETE FOOTINGS SHALL BE PROTECTED FROM FREEZING FOR A PERIOD OF NOT LESS THAN 5 DAYS.

CONCRETE REINFORCING STEEL

1. REINFORCING BARS ARE TO BE DOMESTIC NEW BILLET STEEL CONFORMING TO ASTM A615-GRADE 60 STEEL INCLUDING STIRRUPS AND TIES U.N.O. REINFORCING WHICH IS REQUIRED TO BE WELDED SHALL CONFORM TO ASTM A706. WELDED WIRE FABRIC SHALL CONFORM TO ASTM A1064
2. ALL DETAILING, FABRICATION AND ERECTION OF REINFORCING BARS AND THEIR SUPPORT IN THE FORMS WITH ACCESSORIES MUST FOLLOW THE ACI "MANUAL OF STANDARD PRACTICE FOR DETAILING REINFORCED CONCRETE STRUCTURES" (ACI 315-LATEST)
3. CONCRETE COVER OVER PRIMARY REINFORCING, TIES AND STIRRUPS SHALL BE AS FOLLOWS:

   FOOTING -------- 3"
   SLABS ON GRADE--- 1 1/2"
   BEAMS --------- 1 1/2"

   ALL BARS INCLUDING TEMPERATURE BARS ARE TO EXTEND WITHIN 3" OF THE OUTER FACES OF THE MEMBER INTO WHICH THEY FRAME.
4. WELDED WIRE FABRIC MUST LAP 6" AT SIDES AND 6" AT ENDS AND BE WIRED TOGETHER
5. REINFORCING BARS SHALL BE WELDED ONLY WHERE SHOWN ON THE STRUCTURAL DRAWINGS AND WELDS SHALL BE IN ACCORDANCE WITH THE "STRUCTURAL WELDING CODE- REINFORCING STEEL" (AWS D1.4) NO OTHER REINFORCING MAY BE WELDED WITHOUT THE APPROVAL OF THE STRUCTURAL ENGINEER. TACK WELDING OF ANY REINFORCING IS STRICTLY PROHIBITED

CONCRETE REINFORCING STEEL - CONT.

6. DOWELS IN WALL FOOTINGS TO BE EQUIVALENT IN SIZE AND NUMBER TO VERTICAL BARS.
   - 6.1. ALL HOOKED OR BENT DOWELS MUST BE IN POSITION BEFORE PLACING CONCRETE, PUSHING BARS INTO FRESHLY PLACED CONCRETE IS NOT ACCEPTABLE.
   - 6.2. ALL STRAIGHT DOWELS CAN BE PUSHED INTO FRESHLY PLACED CONCRETE
7. PROVIDE THE FOLLOWING ADDITIONAL REINFORCING UNLESS OTHERWISE CALLED FOR ON STRUCTURAL PLANS:
   - 7.1. CORNER BARS AT ALL CORNERS AND INTERSECTIONS OF CONCRETE WALLS AND FOOTINGS TO MATCH HORIZONTAL REINFORCING. WHERE WALL HAS NO OUTSIDE REINFORCING PROVIDE #4 CORNER BARS SPACED HORIZONTALLY AT 1'-0" cc WITH (3)- #3 VERTICAL SUPPORT BARS
   - 7.2. PROVIDE #4 SLAB DOWELS AT 8" CENTERS AT DOORS UNLESS NOTED
   - 7.3. BARS AT OPENING IN SLAB AND WALLS. PROVIDE BARS WITH AREA EQUAL TO INTERRUPTED REINFORCING. PLACE 1/2" AT EACH SIDE OF OPENING. PROVIDE (2)- #5 BARS, EACH FACE, AT ALL SIDES OF OPENING, EXTEND BARS 2'-0" BEYOND OPENING.
   - 7.4. CONTINUOUS HORIZONTAL REINFORCEMENT SHALL BE PROVIDED AT TOP AND BOTTOM OF ALL WALLS UNLESS OTHERWISE NOTED ON PLAN
     8" WALL: (1) #4 AT TOP AND BOTTOM
   - 7.5. ADDITIONAL CONTINUOUS HORIZONTAL AND VERTICAL REINFORCEMENT SHALL BE PROVIDED IN WALLS, UNLESS OTHERWISE NOTED ON PLAN
     8" WALL: #4 AT 12"o.c.
8. THE STRUCTURAL ENGINEER SHALL BE NOTIFIED FOR INSPECTION OF REBAR PLACEMENT.

CONCRETE

1. STANDARDS
   - 1.1. ACI 318 BUILDING CODE REQUIREMENT FOR REINFORCED CONCRETE
   - 1.2. ACI 315 MANUAL OF STANDARD PRACTICE FOR DETAILING REINFORCED CONCRETE STRUCTURES.
   - 1.3. ACI 347 RECOMMENDED PRACTICE FOR CONCRETE FRAMEWORK
   - 1.4. ACI 304 RECOMMENDED PRACTICE FOR MEASURING, MIXING TRANSPORTING AND PLACING CONCRETE
   - 1.5. ACI 309 RECOMMENDED PRACTICE FOR CONSOLIDATION OF CONCRETE
   - 1.6. ACI 308 RECOMMENDED PRACTICE FOR CURING CONCRETE
   - 1.7. ACI 306 RECOMMENDED PRACTICE FOR COLD WEATHER CONCRETING
   - 1.8. ACI 305 RECOMMENDED PRACTICE FOR HOT WEATHER CONCRETING.
2. ALL CAST IN PLACE CONCRETE SHALL BE READY- MIXED AND HAULED IN ACCORDANCE WITH ASTM C94.

LOCATION	28 DAY COMPRESSIVE STRENGTH	SLUMP	ENTRAINED AIR CONTENT	CEMENT CONTENT
EXTERIOR SLABS ON GRADE	4000 psi NORMAL WT. 1½" MAX AGGREGATE	2" TO 4"	6% ±1.0%	6 SACKS W/C=0.45
FOOTINGS, WALLS & GRADE BEAMS	4500 psi NORMAL WT. ¾" MAX AGGREGATE	2" TO 5"	6% ±1.0%	6 SACKS W/C=0.45
INTERIOR SLABS ON GRADE	4000 psi NORMAL WT. 1½" MAX AGGREGATE	2" TO 4"	2.0% MAX	6 SACKS W/C=0.40

PORTLAND CEMENT SHALL CONFORM TO ASTM C150 TYPE I/II
NORMAL WEIGHT AGGREGATE SHALL CONFORM TO ASTM C 33 #67
WATER REDUCING AGENT SHALL CONFORM TO (ASTM C494 TYPE A OR D).
AIR RETAINING AGENT SHALL CONFORM TO (ASTM C260).

3. ALL INGREDIENTS MUST BE COMPATIBLE WITH EACH OTHER AND ALL OTHER INGREDIENTS IN THE CONCRETE. FINE AGGREGATES SHALL BE CLEAN, HARD, DURABLE AND FREE OF DELETERIOUS SUBSTANCES. COARSE AGGREGATES SHALL BE CLEAN, HARD AND DURABLE WITHOUT FLAT OR ELONGATED PIECES.
4. PREPARE TEST CYLINDERS FOR EACH DAY'S PLACEMENT OF EACH CONCRETE MIXTURE EXCEEDING 5 CUBIC YARDS, BUT LESS THAN 25 CUBIC YARDS, PLUS ONE SET FOR EACH ADDITIONAL 50 CUBIC YARDS. TEST ONE AT 7 DAYS AND 2 IN 28 DAYS PER ASTM C39. SUBMIT ALL TEST REPORTS TO THE ARCHITECT AND ENGINEER.
5. FORMS SHALL BE PLYWOOD IN GOOD CONDITION. APPLY A FORM RELEASE AGENT TO ALL FORMS IN ACCORDANCE WITH MANUFACTURERS RECOMMENDATIONS.
6. REFER TO ARCHITECTURAL DRAWINGS FOR CONCRETE FINISHES AND CONFORM TO THE REQUIREMENTS SPECIFIED. REQUEST SUCH SPECIFICATION FROM THE ARCHITECT/STRUCTURAL ENGINEER.
7. UNLESS NOTED OTHERWISE IN PROJECT SPECIFICATIONS FINISHING TOLERANCE SHALL BE WITHIN CLASS B IN ACCORDANCE WITH ACI 301 AND CONSIDERATION SHALL BE GIVEN TO SEQUENCING OF CONCRETE PLACEMENT TO FACILITATE CONTROL OF FINISH ELEVATIONS.
8. ALL CONSTRUCTION JOINTS AND POUR STRIPS SHOWN ON THE DRAWINGS SHALL BE INCORPORATED INTO THE STRUCTURE UNLESS THEIR ELIMINATION IS APPROVED BY THE STRUCTURAL ENGINEER.
9. TOLERANCE FOR ANCHOR BOLTS SUPPORT ANGLES AND OTHER EMBEDDED ITEMS SHALL BE PER THE ACI CODE OF STANDARD PRACTICE SECTION 7.5
10. BASE PLATES, ANCHOR BOLTS, SUPPORT ANGLES AND OTHER EMBEDDED ITEMS EXPOSED TO EARTH OR GRANULAR FILL SHALL BE COVERED WITH A MINIMUM OF 3" OF CONCRETE
11. PIPES SLEEVES OR SLOTS SHALL NOT RUN THROUGH CONCRETE UNLESS SIZE AND LOCATION HAVE BEEN SHOWN ON THE STRUCTURAL DRAWINGS OR APPROVED BY THE STRUCTURAL ENGINEER.
12. THE ARCHITECTURAL AND MECHANICAL DRAWINGS MUST BE REFERRED TO FOR ALL MECHANICAL FLOOR REQUIREMENTS AND THE VARIOUS TRADES ARE RESPONSIBLE FOR THE PLACING OF SLEEVES, OUTLET BOXES, ANCHORS ETC., THAT MAY BE REQUIRED.
13. CONCRETE SHALL BE PLACED IN A TIMELY MANNER TO AVOID THE FORMATION OF COLD JOINTS. CONCRETE WALLS AND COLUMNS SHALL BE VIBRATED.
14. UNLESS SHOWN OTHERWISE ALL SLAB-ON-GRADE CONSTRUCTION SHALL HAVE CONTROL JOINTS AT APPROX.. 15'-0"o.c. IN BOTH DIRECTIONS

MASONRY

1. STANDARDS:
   - 1.1. ACI 530 "BUILDING CODE REQUIREMENTS FOR MASONRY STRUCTURES"
   - 1.2. NCMA TEK "MANUAL FOR CONCRETE MASONRY DESIGN AND CONSTRUCTION
   - 1.3. BIA TECHNICAL NOTES ON BRICK CONSTRUCTION
2. MASONRY UNITS SHALL COMPLY WITH ASTM C90 AND TESTED PER ASTM C140
   MORTAR SHALL COMPLY WITH ASTM C270
   GROUT SHALL COMPLY WITH ASTM C476 AND TESTED PER ASTM C1019
   REINFORCING BARS ARE TO BE ASTM A615 - GRADE 60 STEEL
   JOINT REINFORCING SHALL CONFORM TO ASTM A82. GALVANIZED
3. GROUTING AND PLACING OF REINFORCING SHALL BE PERFORMED BY MASON CRAFTWORKERS WHO HAVE SUCCESSFULLY COMPLETED THE INTERNATIONAL MASONRY INSTITUTE TRAINING COURSE FOR "GROUTING AND REINFORCED MASONRY CONSTRUCTION" OR EQUAL
4. PRISM STRENGTH (f'm) OF CMU'S SHALL BE 2500 PSI MINIMUM (NORMAL WEIGHT BLOCKS)
5. NET COMPRESSIVE STRENGTH OF CONCRETE MASONRY UNITS SHALL BE 3250 PSI (NORMAL WEIGHT BLOCKS)
6. GROUT CELLS SOLID AT REINFORCING ONLY WITH 3000 PSI CONCRETE GROUT UNLESS OTHERWISE NOTED.
7. MORTAR SHALL BE TYPE "S" FOR ALL REINFORCED MASONRY WALL AND TYPE "N" FOR ALL MASONRY VENEERS.
8. USE "LOW-LIFT" METHOD OF CONSTRUCTION WITH VERTICAL BARS LAPPED PER "BAR SPLICE SCHEDULE".
9. MORTAR SHALL BE PLACED AT ALL HEAD JOINTS, FACE SHELLS, AND WEBS ADJACENT TO THE CELLS CONTAINING VERTICAL REINFORCEMENT.
10. VERTICAL REINFORCEMENT MUST BE POSITIONED IN THE CENTER OF THE CELL USING MASONRY POSITIONING TIES AT 8'-0" cc MAXIMUM UNLESS NOTED ON THE STRUCTURAL DRAWINGS. PLACEMENT OF THE BAR MUST BE KEPT WITHIN 1/2" OF CENTER. IF REINFORCEMENT PLACEMENT NEEDS TO EXCEED 1/2" DUE TO PLACEMENT OF THE EMBEDDED ITEMS OF CONDUIT, THE ENGINEER MUST BE NOTIFIED TO APPROVE RESULTING LOCATION.
11. MASONRY SHALL BE LAID IN A RUNNING BOND UNLESS NOTED OTHERWISE.
12. PROVIDE CONTROL JOINTS IN ALL MASONRY AT A MAXIMUM OF 25'-0" APART UNLESS NOTED OTHERWISE ON DRAWING.
13. UNLESS NOTED OTHERWISE ALL LOAD BEARING AND NONLOAD BEARING CMU WALLS TO BE REINFORCED WITH 9 ga HORIZONTAL JOINT REINFORCING AT 16" o.c. AND VERTICAL BARS AS INDICATED BELOW:
    - 13.1. PROVIDE VERTICAL REINFORCING AT CORNERS OF INTERSECTING WALLS, AT EACH JAMB OF OPENINGS, AND ON EACH SIDE OF CONTROL JOINTS AND EXPANSION JOINTS.
    - 13.2. VERTICAL REINFORCING: #5's @ 48"o.c. @ 8" CMU
14. VERTICAL REINFORCING IN MASONRY WALLS SHOWN HERE ON THE DRAWINGS ARE NOT A SUBSTITUTE FOR TEMPORARY BRACING REQUIRED FOR MASONRY WALLS DURING CONSTRUCTION. CONTRACTOR IS RESPONSIBLE FOR DESIGN AND INSTALLATION OF THE TEMPORARY BRACING AS REQUIRED.
15. BLOCK CORES SHALL BE FILLED SOLID AT LOCATIONS OF ANCHOR EXPANSION BOLTS.
16. PROVIDE CONTINUOUS BOND BEAMS w/(2)- #4 HORIZONTAL BARS EVERY 10'-0" MAX. VERTICALLY.

WOOD TRUSSES.

1. REFERENCE SPECIFICATIONS:
   - 1.1. THE DESIGN AND FABRICATION CRITERIA OF ALL WOOD TRUSSES SHALL CONFORM WITH THE NATIONAL DESIGN SPECIFICATIONS FOR STRESS GRADE LUMBER AND ITS FASTENERS" BY THE NATIONAL FOREST PRODUCTS ASSOCIATION (LATEST REVISION): "TIMBER AND CONSTRUCTION", (LATEST REVISION) AND DESIGN SPECIFICATIONS AND ALL THEIR REFERENCES WHERE SET OUT IN FULL HERE IN TRUSSES SHALL COMPLY WITH THE HUD HANDBOOK NO. 4960.2
2. LUMBER:
   - 2.1. ALL LUMBER USED FOR TRUSS MEMBERS SHALL CONFORM TO THE PUBLISHED STRESS RATINGS FOR THE SPECIES AND GRADES AS SET OUT IN THE OFFICIAL GRADING RULES OF THE APPROPRIATE LUMBER ASSOCIATION OR AS LISTED IN THE REFERENCE SPECIFICATIONS: EXCEPT WHERE EVER SPECIFICATION OR NOTES ON THE PLANS OR TRUSS ENGINEERING DESIGNS CALL FOR LUMBER WHICH EXCEEDS THE MINIMUM SET FORTH THEREIN, THE SPECIFICATIONS AND PLANS SHALL BE APPLICABLE AND INFORMATION STATED OR SHOWN IN ONE SHALL BE APPLICABLE SAME AS IF IN BOTH.
   - 2.2. TOP CHORD MEMBERS SHALL BE MINIMUM SPRUCE-PINE-FIR #2. ALL OTHER TRUSS MEMBERS SHALL BE DESIGN AS REQUIRED BY STRESS
   - 2.3. THE MOISTURE CONTENT OF ALL LUMBER SHALL BE WITHIN THE PROPER LIMITS, AS STATED IN THE REFERENCE SPECIFICATIONS, BUT SHALL NOT IN ANY CASE EXCEED 19% NOR BE LESS THAN 7% AT THE TIME OF FABRICATION.
3. CONNECTORS:
   - 3.1. ALL TRUSS CONNECTOR PLATES SHALL BE MANUFACTURED FROM ONLY PRIME COMMERCIAL QUALITY GALVANIZED SHEET STEEL NO LESS THAN 20 GAUGE THICKNESS WHICH HAS A MINIMUM YIELD OF 33,000 PSI AND A MINIMUM ULTIMATE TENSILE STRENGTH OF 48,000 PSI. THE CORROSION RESISTANCE COATING SHALL BE 1.25 OZ. PER SQUARE FOOT COMMERCIAL CLASS HOT DIPPED GALVANIZED OR EQUIVALENT.
   - 3.2. THE CONNECTOR PLATES SHALL BE MANUFACTURED SO AS TO HAVE A SERIES OF NAIL-LIKE PROJECTIONS: EACH PROJECTION OF WHICH SHALL HAVE PRACTICALLY PARALLEL SIDES THROUGH ITS LENGTH WITH NO OFFSETS, EXCEPT THAT THE END SHALL BE SHAPED TO A BLUNT POINT OR WEDGE. EACH NAIL-LIKE PROJECTION SHALL BE MANUFACTURED SO ITS LENGTH IS NOT LESS THAN FIVE TIMES THE DIMENSION OF ITS GREATER WIDTH; AND FORMED IN A MANNER WHICH PERMITS THE PROJECTION TO SEPARATE RATHER THAN TO CUT THE WOOD FIBERS IN ACCORDANCE WITH ACCEPTED NAILING TECHNIQUES. EACH PLATE SHALL BEAR THE STAMPED NAME OF ITS MANUFACTURER WHICH SHALL BE THE SAME AS THE COMPANY FINISHING THE APPROVED TRUSS ENGINEERING DESIGN.
   - 3.3. WHERE FIELD CONNECTIONS OF TRUSS SUBASSEMBLIES ARE NECESSARY, SPECIAL NAIL-ON SPLICE PLATES ARE ACCEPTABLE, PROVIDING THE PLATE SIZES AND POSITIONS ARE SHOWN ON THE TRUSS ENGINEERING DESIGNS AS APPROVED BY A PROFESSIONAL ENGINEER.
4. FABRICATION:
   - 4.1 ALL TRUSSES AND OTHER STRUCTURAL COMPONENTS SHALL BE FABRICATED IN A PROPERLY EQUIPPED MANUFACTURING FACILITY OF PERMANENT NATURE. THEY SHALL BE MANUFACTURED BY EXPERIENCED WORKMAN, USING PRECISION CUTTING AND TRUSS FABRICATION EQUIPMENT UNDER THE DIRECT SUPERVISION OF A QUALIFIED FOREMAN. ALL TRUSSES SHALL BE FABRICATED UNDER STRICT RULES OF INSPECTION AND QUALITY CONTROL AS THE LOCAL CODE MAY REQUIRE AND BE OPEN TO INSPECTION BY CONTRACTOR AND ARCHITECT AT ALL TIMES

ENGINEERING DESIGN AND SHOP DRAWINGS.

1. PROFESSIONAL ENGINEER: ALL TRUSS DESIGN SHALL BEAR THE NAME, SEAL AND/OR REGISTERED NUMBER OF A LICENSED PROFESSIONAL ENG. IN THE STATE OF WHICH THE PROJECT IS LOCATED.
2. TRUSS DEFLECTION CRITERIA: TOTAL LOAD: L/240 ; LIVE LOAD: L/480
3. TRUSS DESIGN SHALL CONTAIN THE FOLLOWING DATA:
   - 3.A. ROOF TRUSS LOADS SHALL CONFORM TO GOVERNING BUILDING CODE. MINIMUM LOADS PROVIDED BELOW.
     - 3.A.1. MINIMUM LOADING (UNIFORM)
       TOP CHORD
       LIVE LOAD......20 PSF
       RAIN LOAD....16 PSF
       SNOW LOAD...20 PSF+DRIFT
       DEAD LOAD.....15 PSF
       BOTTOM CHORD
       LIVE LOAD.....0 PSF
       DEAD LOAD.....10 PSF
       TOTAL LOAD 45 PSF MIN.
   - 3.B. METAL CONNECTOR: GAUGE SIZES AND CONNECTOR'S NAME OF MANUFACTURER AND CAPACITY OF EACH CONNECTION.
   - 3.C. LUMBER SPECIFICATIONS
   - 3.D. PITCH, SPAN AND SPACING OF TRUSSES
   - 3.E. DESIGN LOADS AND ALLOWABLE UNIT STRESSES INCREASE, IF ANY.
   - 3.F. FORCE ANALYSIS OR BAR FORCES IN EACH MEMBER
   - 3.G. SIZE AND LOCATION OF ALL CONNECTOR PLATES
   - 3.H. TRUSS SUPPORTS
   - 3.I. TEMPORARY ERECTION AND PERMANENT BRACING PER DESIGN CRITERIA LOADING.
   - 3.J. HANDLING AND ERECTION INSTRUCTIONS

WOOD

1. STANDARDS:
   - 1.1. "TIMBER CONSTRUCTION MANUAL" BY AMERICAN INSTITUTE OF TIMBER CONSTRUCTION (LATEST EDITION).
   - 1.2. "NATIONAL DESIGN SPECIFICATIONS FOR WOOD CONSTRUCTION" BY NATIONAL FOREST PRODUCTS ASSOCIATION (LATEST EDITION).
   - 1.3. "PANEL DESIGN SPECIFICATION" AMERICAN PLYWOOD ASSOCIATION LATEST EDITION)
2. ALL LUMBER SHALL CONFORM TO THE SPECIES AND FULLY RECOGNIZE NOMINAL SIZES SHOWN ON THE PLANS OR TRUSS ENGINEER'S DESIGNS. ALL MEMBERS SHALL BE CUT FROM FROM LUMBER WHICH BEARS THE PROPER GRADEMARK STAMP OF A RECOGNIZED GRADING ASSOCIATION OR LICENSED LUMBER INSPECTION AGENCY. NO LUMBER SHALL BE USED WHICH DOES NOT APPEAR TO CONFORM TO THE PROPER DIMENSIONS AND/OR GRADE.
3. WALL STUD FRAMING OF QUALITY TO MEET MINIMUM STRESS REQUIREMENTS GIVEN IN TABLE BELOW: (19% MAX. M.C.)

(SOUTHERN PINE #2)		
Fb BENDING	(psi)	1100
Ft TENSION	(psi)	675
Fv SHEAR	(psi)	175
Fc PERPENDICULAR	(psi)	565
Fc PARALLEL	(psi)	1450
E	(psi)	1,400,000

4. HORIZONTAL FRAMING OF QUALITY TO MEET MINIMUM STRESS REQUIREMENTS. GIVEN IN THE TABLE BELOW: (19% MAX M.C.)

(SOUTHERN PINE #2)		2x8's	2x10's	2x12's
Fb BENDING	(psi)	925	800	750
Ft TENSION	(psi)	550	475	450
Fv SHEAR	(psi)	175	175	175
Fc PERPENDICULAR	(psi)	565	565	565
Fc PARALLEL	(psi)	1350	1300	1250
E	(psi)	1,400,000	1,400,000	1,400,000

5. MANUFACTURED LUMBER FRAMING OF QUALITY TO MEET MINIMUM STRESS REQUIREMENTS GIVEN IN TABLE BELOW: (19% MAX. M.C.)

		LVL
Fb BENDING	(psi)	2600
Ft TENSION	(psi)	1895
Fv SHEAR	(psi)	285
Fc PERPENDICULAR	(psi)	750
E	(psi)	2,000,000

6. POSTS AND TIMBER FRAMING OF QUALITY TO MEET MINIMUM STRESS REQUIREMENTS GIVEN IN TABLE BELOW: (19% MAX. M.C.)

(SOUTHERN PINE #2)		6x6
Fb BENDING	(psi)	850
Ft TENSION	(psi)	550
Fv SHEAR	(psi)	165
Fc PERPENDICULAR	(psi)	375
Fc PARALLEL	(psi)	525
E	(psi)	1,200,000

7. PLYWOOD: REFER TO SECTION 2303 OF 2015 IBC FOR ADD'L INFORMATION
   - 7.1. ROOF: 5/8" THICK, CDX EXPOSURE 1, 5 PLY WITH A 40/20 APA SPAN INSTALL 'H' CLIPS AT PANEL EDGE MID-SPAN BETWEEN TRUSSES INSTALLED WITH FACE GRAIN PERPENDICULAR TO SUPPORT
   - 7.2. WALL: 1/2" THICK, CDX EXPOSURE 1, 5 PLY WITH A 32/16 APA SPAN INSTALLED WITH FACE GRAIN PARALLEL TO SUPPORTS
8. PROVIDE TRIPLE WOOD STUDS BUILT UP COLUMNS AT EACH END OF BEAMS AND TRUSS GIRDERS UNLESS OTHERWISE NOTED
9. PROVIDE SIMPSON OR EQUAL STANDARD COLUMN BASES, COLUMN CAP, JOIST HANGERS AND BEAM HANGERS WHERE REQUIRED FOR FLOOR AND ROOF FRAMING.

NAILING SCHEDULE
(COMMON NAILS UNLESS OTHERWISE NOTED)

CONNECTION	NAILING
1/2" PLYWOOD ROOF DECK-SHEETS LAID PERPENDICULAR TO TRUSS	10d NAILS AT 6"o.c. AT EDGES & 12"o.c AT INTERMEDIATE SUPPORTS
1/2" PLYWOOD WALL SHT'G SHEETS LAID PARALLEL TO STUDS	SEE SHEARWALL SCHEDULE
*5/8" GYPSUM WALLBOARD BLOCKED @ EDGE	6d COOLER NAILS @ 4"o.c.
FLOOR JOIST TO SILL PLATES-TOE NAILED	(3)-8d NAILS
SOLE PLATE TO JOIST OR BLOCKING	16d NAILS @ 16"o.c.
PLATE TO STUD-END NAILED	(2)-16d NAILS
PLATE TO STUD-TOE NAILED	(4)-8d NAILS
DOUBLE STUDS-FACE NAILED	16d NAILS @ 12"o.c.
DOUBLE TOP PLATES-FACE NAILED	16d NAILS @ 16"o.c.
BLOCKING TO JOISTS-TOE NAILED	(3)-8d NAILS
CONTINUOUS HEADER-(2)-PIECE	16d NAILS @ 16"o.c. TOP & BOTTOM
TOP PLATE LAPS & INTERSECTION FACE NAILED	(6)-16d NAILS EACH SIDE OF LAP
CONTINUOUS HEADER TO STUD-TOE NAILED	(4)-8d NAILS

(*) NAILING APPLIES AT ALL EDGES, STUDS, AND BLOCKING

NOTE: NALING AS INDICATED ABOVE, REPRESENTS MINIMUM REQUIREMENTS AND SHALL APPLY UNLESS OTHERWISE NOTED.

DUTCH BROS Coffee

CORALIC ARCHITECTURE

ARCHITECT
CORALIC, LLC
EDIN CORALIC
9700 MACKENZIE ROAD, STE. 222
ST. LOUIS, MO 63123
p: 314.578.4953
e: edin@coralicarchitecture.com

STRUCTURAL ENGINEER
JAMES C. KREHER
JIM KREHER
208 N. MAIN STREET,
COLUMBIA, IL 62236
p: 618.281.8505
jimk@kreherengineering.com

MEP ENGINEER
Case Engineering
DARRELL R. CASE
796 MERUS CT.,
FENTON, MO 63026
T. 636.349.1600 F. 636.349.1730
dcase@caseengineeringinc.com

JAMES C. KREHER
STRUCTURAL ENGINEER
PE-25562 Ex. 12-31-2021

STATE OF MISSOURI
JAMES C. KREHER
NUMBER E-25562
REGISTERED PROFESSIONAL ENGINEER
10-11-21

MISSOURI CERTIFICATE OF AUTHORITY NO. 2004012212

Project No: MO0102
Dutch Bros Coffee - New Freestanding Store
500 NW Chipman Road. Lee's Summit, Missouri 64086
for: Dutch Bros Coffee
110 SW 4th St.
Grants Pass, OR 97526

ISSUED FOR PERMIT:
10.11.2021

REV:	DATE:	DESCRIPTION:

SHEET NAME:

GENERAL NOTES

SHEET NUMBER:

S1.1

© 2020 DB Franchising USA, LLC

SPECIAL STRUCTURAL INSPECTIONS

1. SPECIAL INSPECTIONS SHALL BE PERFORMED BY A CERTIFIED INSPECTOR APPROVED BY THE ARCHITECT/ENGINEER OF RECORD AND THE BUILDING OFFICIAL. THE SPECIAL INSPECTOR OR AGENCY SHOULD BE UNDER THE RESPONSIBILITY OF A REGISTERED PROFESSIONAL ENGINEER SPECIALIZING IN STRUCTURAL ENGINEERING.

2. THE CONTRACTOR IS RESPONSIBLE FOR SCHEDULING AND TIMELY NOTIFICATION OF THE NEED FOR SPECIAL INSPECTION.

3. DUTIES OF THE SPECIAL INSPECTOR:
   - 3.1. THE SPECIAL INSPECTOR WILL OBSERVE THE ASSIGNED ITEMS FOR CONFORMANCE WITH THE APPROVED DESIGN DRAWINGS AND SPECIFICATIONS.
   - 3.2. THE SPECIAL INSPECTOR WILL FURNISH INSPECTION REPORTS TO THE BUILDING OFFICIAL AND THE ENGINEER/ARCHITECT OF RECORD WITHIN 48 HOURS AFTER COMPLETING INSPECTIONS.
   - 3.3. DISCREPANCIES SHALL BE BROUGHT TO THE IMMEDIATE ATTENTION OF THE CONTRACTOR FOR CORRECTION. IF DISCREPANCIES ARE NOT CORRECTED, THE DISCREPANCIES SHALL BE BROUGHT TO THE ATTENTION OF THE BUILDING OFFICIAL AND THE ENGINEER/ARCHITECT.
   - 3.4. UPON COMPLETION OF THE WORK, THE SPECIAL INSPECTOR SHALL COMPLETE AND SIGN A FINAL REPORT CERTIFYING THAT TO THE BEST OF THE INSPECTORS KNOWLEDGE THE WORK IS IN CONFORMANCE WITH THE APPROVED PLANS, SPECIFICATIONS AND PROVISION OF THE IBC CODE.

4. INSPECTIONS: REFER TO THE IBC BUILDING CODE FOR THE DEFINITION OF PERIODIC AND CONTINUOUS INSPECTIONS INCLUDING SPECIFIC REQUIREMENTS.

5. ALL SPECIAL INSPECTIONS PERFORMED ON THIS PROJECT SHALL COMPLY WITH 2018 IBC SECTIONS 1704 AND 1705
   - 5.1. SPECIAL INSPECTION DAILY LOGS/REPORTS SHALL BE MAINTAINED ON-SITE BY THE PROJECT SUPERINTENDENT FOR USE AND REFERENCE BY THE ST. CHARLES, MO. INSPECTION STAFF.
   - 5.2. SUPERINTENDENT SHALL FORWARD ALL INSPECTION REPORTS TO ARCHITECT AND ENGINEER OF RECORD PRIOR TO COMPLETING "CERTIFICATE OF SPECIAL INSPECTION" FOR SUBMISSION TO THE LEE SUMMIT, MO INSPECTION STAFF FOR THE FINAL BUILDING INSPECTION.

STRUCTURAL SCHEDULE OF SPECIAL INSPECTIONS – SEISMIC RESISTANCE – STRUCTURAL

VERIFICATION AND INSPECTION IBC SECTION 1705.12.1 THROUGH 1705.12.9, UNLESS EXEMPTED BY THE EXCEPTIONS OF SECTION 1704.2.	EXTENT: CONTINUOUS PERIODIC SUBMITTAL	REFERENCE STANDARD	IBC REFERENCE	AGENT QUALIFICATION
1. STRUCTURAL STEEL: SPECIAL INSPECTIONS FOR SEISMIC RESISTANCE SHALL BE IN ACCORDANCE WITH SECTION 1705.12.1.1 OR 1705.12.1.2, AS APPLICABLE.				
1.1. SEISMIC FORCE-RESISTING SYSTEMS. SPECIAL INSPECTIONS OF STRUCTURTAL STEEL IN THE SEISMIC FORCE-RESISTING SYSTEMS OF BUILDINGS AND STRUCTURES ASSIGNED TO SEISMIC DESIGN CATEGORY D SHALL BE PERFORMED IN ACCORDANCE WITH THE QUALITY ASSURANCE REQUIREMENTS OF AISC 341.	P	AISC 341	IBC 1705.12.1.1	PE/SE OR EIT
1.2. STRUCTURAL STEEL ELEMENTS. SPECIAL INSPECTIONS OF STRUCTURAL STEEL ELEMENTS IN THE SEISMIC FORCE-RESISTING SYSTEMS OF BUILDINGS AND STRUCTURES ASSIGNED TO SEISMIC DESIGN CATEGORY D OTHER THAN THOSE COVERED IN SECTION 1705.12.1.1, INCLUDING STRUTS, COLLECTORS, CHORDS AND FOUNDATION ELEMENTS, SHALL BE PERFOREMED IN ACCORDANCE WITH THE QUALITY ASSURANCE REQUIREMENTS OF AISC 341.	P	AISC 341	IBC 1705.12.1.2	PE/SE OR EIT
2. STRUCTURTAL WOOD: FOR THE SEISMIC FORCE-RESISTING SYSTEMS OF STRCUTURES ASSIGNED TO SEISMIC DESIGN CATEGORY D.				
2.1. CONTINUOUS SPECIAL INSPECTION SHALL BE REQUIRED DURING FIELD GLUING OPERATIONS OF ELEMENTS OF THE SEISMIC FORCE-RESISTING SYSTEM.	C		IBC 1705.12.2	PE/SE OR EIT
2.2. PERIODIC SPECIAL INSPECTION SHALL BE REQUIRED FOR NAILING, BOLTING, ANCHORING AND OTHER FASTENING OF ELEMENTS OF THE SEISMIC FORCE-RESISTING SYSTEM, INCLUDING WOOD SHEAR WALLS, WOOD DIAPHRAGMS, DRAG STRUTS, BRACES, SHEAR PANELS AND HOLD-DOWNS.	P		IBC 1705.12.2	PE/SE OR EIT
3. COLD-FORMED STEEL LIGHT-FRAME CONSTRUCTION: FOR THE SEISMIC FORCE-RESISTING SYSTEMS OF STRUCTURES ASSIGNED TO SEISMIC DESIGN CATEGORY D PERIODIC SPECIAL INSPECTION SHALL BE REQUIRED:				
3.1. FOR WELDING OPERATIONS OF ELEMENTS OF THE SEISMIC FORCE-RESISTING SYSTEM; AND	C		IBC 1705.12.3	
3.2. FOR SCREW ATTACHMENT, BOLTING, ANCHORING AND OTHER FASTENING OF ELEMENTS OF THE SEISMIC FORCE-RESISTING SYSTEM, INCLUDING SHEAR WALLS, BRACES, DIAPHRAGMS, COLLECTORS (DRAG STRUTS) AND HOLD-DOWNS.	C		IBC 1705.12.3	

STRUCTURAL SCHEDULE OF SPECIAL INSPECTIONS – WIND RESISTANCE – STRUCTURAL

VERIFICATION AND INSPECTION IBC SECTION 1705.11.1 THROUGH 1705.11.3, UNLESS EXEMPTED BY THE EXCEPTIONS OF SECTION 1704.2.	EXTENT: CONTINUOUS PERIODIC SUBMITTAL	REFERENCE STANDARD	IBC REFERENCE	AGENT QUALIFICATION
1. STRUCTURAL WOOD:				
1.1. CONTINUOUS SPECIAL INSPECTION IS REQUIRED DURING FIELD GLUING OPERATIONS OF ELEMENTS OF THE MAIN WINDFORCE-RESISTING SYSTEM.	C		IBC 1705.11.1	PE/SE OR EIT
1.2. PERIODIC SPECIAL INSPECTION IS REQUIRED FOR NAILING, BOLTING, ANCHORING AND OTHER FASTENING OF ELEMENTS OF THE MAIN WINDFORCE-RESISTING SYSTEM, INCLUDING WOOD SHEAR WALLS, WOOD DIAPHRAGMS, DRAG STRUTS, BRACES AND HOLD-DOWNS.	P		IBC 1705.11.1	PE/SE OR EIT
2. COLD-FORMED STEEL LIGHT-FRAME CONSTRUCTION				
2.1. PERIODIC SPECIAL INSPECTION IS REQUIRED FOR WELDING OPERATIONS OF ELEMENTS OF THE MAIN WINDFORCE-RESISTING SYSTEM.	P		IBC 1705.11.2	PE/SE OR EIT
2.2. PERIODIC SPECIAL INSPECION IS REQURIED FOR SCREW ATTACHMENT, BOLTING, ANCHORING AND OTHER FASTENING OF ELEMENTS OF THE MAIN WINDFORCE-RESISTING SYSTEM, INCLUDING SHEAR WALLS, BRACES, DIAPHRAGMS, COLLECTGORS (DRAG STRUTS) AND HOLD-DOWNS.	P		IBC 1705.11.2	PE/SE OR EIT
3. WIND-RESISTING COMPONENTS: PERIODIC SPECIAL INSPECTION IS REQUIRED FOR FASTENING OF THE FOLLOWING SYSTEMS AND COMPONENTS:				
3.1. ROOF COVERING, ROOF DECK AND ROOF FRAMING CONNECTIONS.	P		IBC 1705.11.3	PE/SE OR EIT
3.2. EXTERIOR WALL COVERING AND WALL CONNECTIONS TO ROOF AND FLOOR DIAPHRAGMS AND FRAMING.	P		IBC 1705.11.3	PE/SE OR EIT

THE PROFESSIONAL ENGINEERS SEAL AFFIXED TO THIS SHEET INDICATES THAT THE NAMED ENGINEER HAS PREPARED OR DIRECTED THE PREPARATION OF THE MATERIAL SHOWN ONLY ON THIS SHEET. OTHER DRAWINGS AND DOCUMENTS, NOT EXHIBITING THIS SEAL, SHALL NOT BE CONSIDERED PREPARED BY OR THE RESPONSIBILITY OF THE UNDERSIGNED. USE OF THE DRAWINGS WITHOUT THE PROFESSIONAL ENGINEERS SEAL IS PROHIBITED.
JOB NO. K21-002J

COPYRIGHT (C) 2021 KREHER ENGINEERING, INC. REPRODUCTION OF THIS DRAWING FOR SHOP DRAWINGS IS PERMITTED, BUT AT THE USERS RISK. THE USER SHALL REMOVE ALL SEALS, FIRM NAMES, TITLES, SHEET NUMBERS AND SHALL ASSUME FULL RESPONSIBILITY FOR THEIR ACCURACY, COMPLETENESS AND STATUS.

STRUCTURAL SCHEDULE OF SPECIAL INSPECTIONS – SOILS AND FOUNDATION CONSTRUCTION

VERIFICATION AND INSPECTION IBC SECTION 1705.6; 1705.7; 1705.8; 1705.9 IBC TABLE 1705.6; 1705.7; 1705.8	EXTENT: CONTINUOUS PERIODIC SUBMITTAL	REFERENCE STANDARD	IBC REFERENCE	AGENT QUALIFICATION
1. VERIFY EXISTING SOIL CONDITIONS, FILL PLACEMENT AND LOAD BEARING REQUIREMENTS.				
1.1. VERIFY MATERIALS BELOW SHALLOW FOUNDATIONS ARE ADEQUATE TO ACHIEVE THE DESIGN BEARING CAPACITY.	P		IBC 1705.6	PE/GE; EI OR ET
1.2. VERIFY EXCAVATION ARE EXTENDED TO PROPER DEPTH AND HAVE REACHED PROPER MATERIAL.	P		IBC 1705.6	PE/GE; EI OR ET
1.3. PERFORM CLASSIFICATION AND TESTING OF COMPACTED FILL MATERIALS.	P		IBC 1705.6	PE/GE; EI OR ET
1.4. VERIFY USE OF PROPER MATERIALS, DENSITIES AND LIFT THICKNESSES DURING PLACEMENT AND COMPACTION OF COMPACTED FILL.	C		IBC 1705.6	PE/GE; EI OR ET
1.5. PRIOR TO PLACEMENT OF COMPACTED FILL, INSPECT SUBGRADE AND VERIFY THAT THE SITE HAS BEEN PREPARED PROPERLY.	P		IBC 1705.6	PE/GE; EI OR ET

STRUCTURAL SCHEDULE OF SPECIAL INSPECTIONS – CONCRETE CONSTRUCTION

VERIFICATION AND INSPECTION IBC SECTION 1705.3	EXTENT: CONTINUOUS PERIODIC SUBMITTAL	REFERENCE STANDARD	IBC REFERENCE	AGENT QUALIFICATION
1. INSPECTION OF REINFORCING STEEL,AND VERIFY PLACEMENT	P	ACI 318: Ch20, 25.2, 25.3, 26.5.1–26.5.3	IBC 1908.4	PE/SE OR EIT
2. REINFORCING BAR WELDING				
2.1. VERIFY WELDABILITY OF REINFORCING BARS OTHER THAN ASTM A 706	P	ACI 318: 26.5.4 AWS D1.4	IBC 1705.3.1	AWS-CWI
2.2. INSPECT SINGLE-PASS FILLET WELD, MAXIMUM 5/16"	P			
2.3. INSPECT ALL OTHER WELDS.	C			
3. INSPECT ANCHORS CAST IN CONCRETE.	P	ACI 318: 17.8.2	IBC 1901.3	PE/SE OR EIT
4. INSPECT ANCHORS POST-INSTALLED IN HARDENED CONCRETE MEMBERS				
4.1. ADHESIVE ANCHORS INSTALLED IN HORIZONTALLY OR UPWARDLY INCLINED ORIENTATIONS TO RESIST SUSTAINED TENSION LOADS.	P	ACI 318: 17.8.2.4		ACI-STT
4.2. MECHANICAL ANCHORS AND ADHESIVE ANCHORS NOT DEFINED IN SECTION 4.1.	P	ACI 318: 17.8.2		
5. VERIFY USE OF REQUIRED DESIGN MIX.	P	ACI 318: Ch19 26.4.5, 26.12	IBC 1904.1, 1904.2, 1908.2, 1908.3	ACI-CFTT OR ACI-CCI
6. PRIOR TO CONCRETE PLACEMENT, FABRICATE SPECIMENS FOR STRENGTH TESTS, PERFORM SLUMP AND AIR CONTENT TESTS,AND DETERMINE THE TEMPERATURE OF THE CONCRETE.	C	ASTM C 172 ASTM C 31 ACI 318: 26.4.5, 26.12	IBC 1908.10	ACI-CFTT OR ACI-SST
7. INSPECT CONCRETE PLACEMENT FOR PROPER APPLICATIONS TECHNIQUES.	C	ACI 318: 26.4.5	IBC 1908.6 1908.7, 1908.8	ACI-CFTT OR ACI-CCI
8. VERIFY MAINTENANCE OF SPECIFIED CURING TEMPERATURES AND TECHNIQUES.	C		IBC 1908.9	ACI-CFTT OR ACI-LTT
9. INSPECT FORMWORK FOR SHAPE, LOCATION AND DIMENSIONS OF THE CONCRETE MEMBER BEING FORMED.	P	ACI 318: 26.10.1(b)		

STRUCTURAL SCHEDULE OF SPECIAL INSPECTIONS
MASONRY CONSTRUCTION – LEVEL B QUALITY ASSURANCE (RISK CATEGORY I, II, III)

VERIFICATION AND INSPECTION IBC SECTION 1705.4	FREQUENCY		REFERENCE FOR CRITERIA	
	CONTINUOUS	PERIODIC	TMS 402/ ACI 530/ ASCE 5	TMS 602/ ACI 530.1/ ASCE 6
1. VERYIFY COMPLIANCE WITH THE APPROVED SUBMITTALS		X		ART. 1.5
2. AS MASONRY CONSTRUCTION BEGINS, VERIFY THAT THE FOLLOWING ARE IN COMPLIANCE:				
a. PROPORTIONS OF SITE-PREPARED MORTAR		X		ART. 2.1, 2.6 A
b. CONSTRUCTION OF MORTAR JOINTS		X		ART. 3.3 B
c. LOCATION OF REINFORCEMENT, CONNECTORS, AND ANCHORAGES		X		ART. 3.4 3.6 A
d. PROPERTIES OF THIN-BED MORTAR FOR AAC MASONRY	X	X		ART. 2.1 C
3. PRIOR TO GROUTING, VERIFY THAT THE FOLLING ARE IN COMPLIANCE:		X		ART. 3.6 B
a. GROUT SPACE		X		ART. 3.2 D,3.2 F
b. GRADE, TYPE, AND SIZE OF REINFORCEMENT AND ANCHOR BOLTS		X	SEC. 6.1	ART. 2.4, 3.4
c. PLACEMENT OF REINFORCEMENT, CONNECTORS, AND ANCHORAGES		X	SEC. 6.1, 6.2.1, 6.2.6, 6.2.7	ART. 3.2 E, 3.4, 3.6 A
d. PROPORTIONS OF SITE-PREPARED GROUT		X		ART. 2.6 B, 2.4 G.1.b
e. CONSTRUCTION OF MORTAR JOINTS		X		ART. 3.3 B
4. VERIFY DURING CONSTRUCTION:				
a. SIZE AND LOCATION OF STRUCTURAL ELEMENTS		X		ART. 3.3 F
b. TYPE, SIZE, AND LOCATION OF ANCHORS, INCLUDING OTHER DETAILS OF ANCHORAGE OF MASONRY TO STRUCTURAL MEMBERS, FRAMES, OR OTHER CONSTRUCTION		X	SEC. 1.2.1(e), 6.1.4.3, 6.2.1	
c. WELDING OF REINFORCEMENT	X		SEC. 8.1.6.7.2, 9.3.3.4(c), 11.3.3.4	
d. PREPARATION, CONSTRUCTION, AND PROTECTION OF MASONRY DURING COLD WEATHER (TEMPERATURE BELOW 40°F (4.4°C) OR HOT WEATHER (TEMPERATURE ABOVE 90°F (32.2°C)		X		ART. 1.8 C, 1.8 D
e. PLACEMENT OF GROUT	X			ART. 3.5, 3.6 C
f. PLACEMENT OF AAC MASONRY UNITS AND CONSTRUCTION OF THIN-BED MORTAR JOINTS	X	X		ART. 3.3 B.9, 3.3 F.1.b
5. OBSERVE PREPARATION OF GROUT SPECIMENS, MORTAR SPECIMENS, AND/OR PRISMS		X		ART. 1.4 B.2.a.3, 1.4 B.2.b.3, 1.4 B.2.c.3, 1.4 B.3, 1.4 B.4

STRUCTURAL SCHEDULE OF SPECIAL INSPECTIONS – WOOD CONSTRUCTION

VERIFICATION AND INSPECTION IBC SECTION 1705.5	EXTENT: CONTINUOUS PERIODIC SUBMITTAL	REFERENCE STANDARD	IBC REFERENCE	AGENT QUALIFICATION
1. FABRICATION ON HIGH-LOAD DIAPHRAGMS				
1.1. VERIFY WOOD STRUCTURAL PANEL SHEATHING FOR GRADE AND THICKNESS	P		IBC 1705.5.1	PE/SE OR EI
1.2. VERIFY THE NOMINAL SIZE OF FRAMING MEMBERS AT ADJOINING PANEL EDGES	P		IBC 1705.5.1	PE/SE OR EI
1.3. VERIFY THE NAIL OR STAPLE DIAMETER AND LENGTH.	P	ASTM F 1667	IBC 1705.5.1	PE/SE OR EI
1.4. VERIFY THE NUMBER OF FASTENER LINES.	P		IBC 1705.5.1	PE/SE OR EI
1.5. VERIFY THE SPACING BETWEEN FASTENERS IN EACH LINE AND AT EDGES.	P		IBC 1705.5.1	PE/SE OR EI
2. METAL PLATE CONNECTED WOOD TRUSSES TEMPORARY AND PERMANENT TRUSS MEMBER RESTRAINT / BRACING INSTALLATION IN ACCORDANCE WITH THE TRUSS SUBMITTAL PACKAGE.	P		IBC 1705.5.2	PE/SE OR EI
3. PROVIDE LOAD TEST FOR TRUSS HANGERS: PROVIDE EVIDENCE OF MANUFACTURERS LOAD TEST IN ACCORDANCE WITH ASTM D7147 INCLUDING THE VERTICAL LOAD BEARING CAPACITY, TORSIONAL MOMENT CAPACITIES, AND DEFLECTION CHARACTERISTICS WHEN THERE IS NO CALCULATED PROCEDURE RECOGNIZED BY THE CODE	S	SUBMIT ICBO REPORTS	IBC 2303.5	PE/SE OR EI

STRUCTURAL SCHEDULE OF SPECIAL INSPECTIONS
FABRICATION AND IMPLEMENTATION PROCEDURES – WOOD TRUSSES

VERIFICATION AND INSPECTION IBC SECTION 1704.2	EXTENT: CONTINUOUS PERIODIC SUBMITTAL	REFERENCE STANDARD	IBC REFERENCE	AGENT QUALIFICATION
1. FABRICATION PROCEDURES: REVIEW OF FABRICATORS WRITTEN PROCEDURAL AND QUALITY CONTROL MANUALS AND PERIODIC AUDITING OF FABRICATION PRACTICES BY AN APPROVED SPECIAL INSPECTION AGENCY. AT COMPLETION OF FABRICATION SHALL SUBMIT A CERTIFICATE OF COMPLIANCE TO THE BUILDING OFFICIAL STATING THAT THE WORK WAS PERFORMED IN ACCORDANCE WITH THE APPROVED CONSTRUCTION DOCUMENTS. – OR – 2. TPI INSPECTION PROGRAM: FABRICATOR SHALL PARTICIPATE IN THE TPI QUALITY ASSURANCE INSPECTION PROGRAM, AND MAINTAIN A COPY OF THE QUALITY ASSURANCE PROCEDURES MANUAL, QAP-90. SUBMIT COPY OF CERTIFICATE. ALL TRUSSES SHALL BEAR THE TPI REGISTERED MARK	S	FABRICATOR SHALL SUBMIT ONE OF THE TWO QUALIFICATIONS	IBC 1704.2.5 IBC 1705.5 IBC 2303.4	PE/SE OR EI
3. AT COMPLETION OF FABRICATION, THE APPROVED FABRICATOR SHALL SUBMIT A CERTIFICATE OF COMPLIANCE TO THE BUILDING CODE OFFICIAL STATING THAT THE WORK WAS PERFORMED IN ACCORDANCE WITH THE APPROVED CONSTRUCTION DOCUMENTS.	S		IBC 1704.2.5.1	PE/SE OR EI

ARCHITECT
CORALIC, LLC
EDIN CORALIC
9700 MACKENZIE ROAD, STE. 222
ST. LOUIS, MO 63123
p: 314.578.4953
e: edin@coralicarchitecture.com

STRUCTURAL ENGINEER
JAMES C. KREHER
JIM KREHER
208 N. MAIN STREET,
COLUMBIA, IL 62236
p: 618.281.8505
jimk@kreherengineering.com

MEP ENGINEER
Case Engineering
DARRELL R. CASE
796 MERUS CT.,
FENTON, MO 63026
T. 636.349.1600 F. 636.349.1730
dcase@caseengineeringinc.com

JAMES C. KREHER
STRUCTURAL ENGINEER
PE-25562 Ex. 12-31-2021

STATE OF MISSOURI
JAMES C. KREHER
NUMBER E-25562
REGISTERED PROFESSIONAL ENGINEER
10-11-21

MISSOURI CERTIFICATE OF AUTHORITY NO. 2004012212

Project No: MO0102

Dutch Bros Coffee - New Freestanding Store

500 NW Chipman Road. Lee's Summit, Missouri 64086
for: Dutch Bros Coffee
110 SW 4th St.
Grants Pass, OR 97526

ISSUED FOR PERMIT:
10.11.2021

REV:	DATE:	DESCRIPTION:

SHEET NAME:

GENERAL NOTES SPECIAL INSPECTIONS

SHEET NUMBER:

S1.2

© 2020 DB Franchising USA, LLC

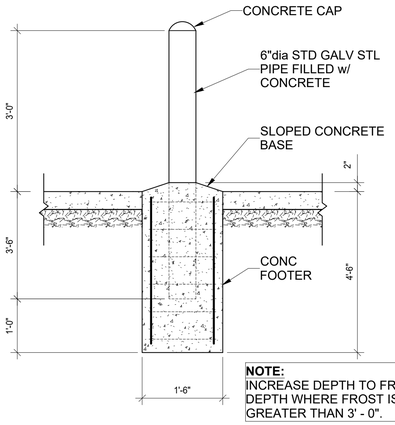

NOTE:
INCREASE DEPTH TO FROST DEPTH WHERE FROST IS GREATER THAN 3' - 0".

A / S1.3 BOLLARD DETAIL
3/4" = 1'-0"

NOTES:
1. SAW-CUT CONTROL JOINTS TO BE CUT AS SOON AS SURFACE WILL NOT BE TORN, ABRADED, OR OTHERWISE DAMAGED BY CUTTING ACTION. (WITHIN 8 TO 10 HR. OF BURNISHING)
2. SPACE CONTROL JOINTS AT 10'-0" MAX. FOR INTERIOR SLABS UNO ON PLANS.
3. CONSTRUCTION JOINTS TO BE USED AT END OF EACH POUR.

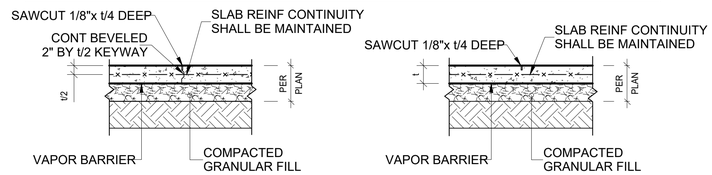

CONSTRUCTION JOINT **CONTROL JOINT**

B / S1.3 TYPICAL CONSTRUCTION & CONTROL JOINT DETAILS
N.T.S.

NOTES:
1. WHERE SINGLE CURTAIN OF REINFORCING OCCURS, BEND BARS AS SHOWN FOR OUTSIDE BARS.
2. FOR MORE THAN 2 BARS PER LAYER, EXTEND INNER BARS 12" INTO PERPENDICULAR FOOTING. OUTER BARS SHALL BE PLACED AS INDICATED.
3. CORNER BARS TO MATCH WALL REINFORCEMENT.

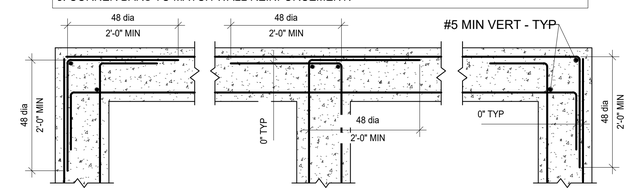

PLAN OF ALT CORNER **PLAN OF INTERSECTION** **PLAN OF TYPICAL CORNER**

C / S1.3 TYP CONCRETE WALL REINFORCEMENT
N.T.S.

NOTES:
1. NEW SLAB TO BE 4,000 PSI
2. MATCH EXISTING SLAB DEPTH
3. COORD w/ARCH & PLUMBING DRAWINGS

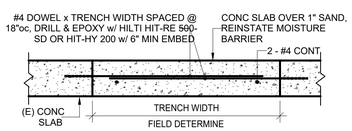

D / S1.3 TYP TRENCH REPAIR DETAIL
N.T.S.

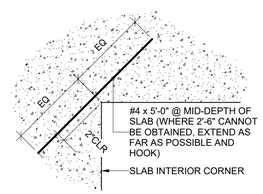

E / S1.3 REINF @ INTERIOR CORNERS
N.T.S.

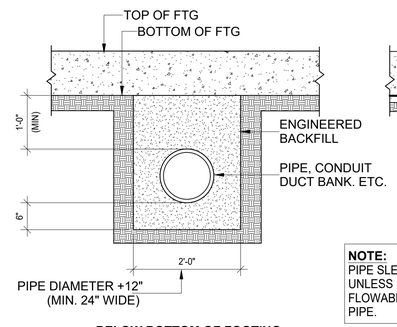

BELOW BOTTOM OF FOOTING

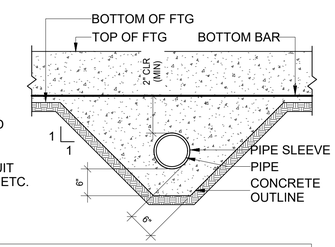

NOTE:
PIPE SLEEVE I.D. 2" LARGER THAN O.D. OF PIPE TYPICAL UNLESS NOTED OTHERWISE. CAULK OR PROVIDE FLOWABLE GROUT w/COMPRESSIBLE WRAP AROUND PIPE.

CLOSE TO BOTTOM OF FOOTING

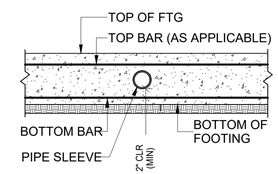

CLEAR OF TOP & BOTTOM BAR IN FOOTING OR FOUNDATION WALL (OR TRENCH FOOTING/GRADE BM.)

F / S1.3 TYPICAL FOUNDATION PIPE PENETRATION DETAILS
N.T.S.

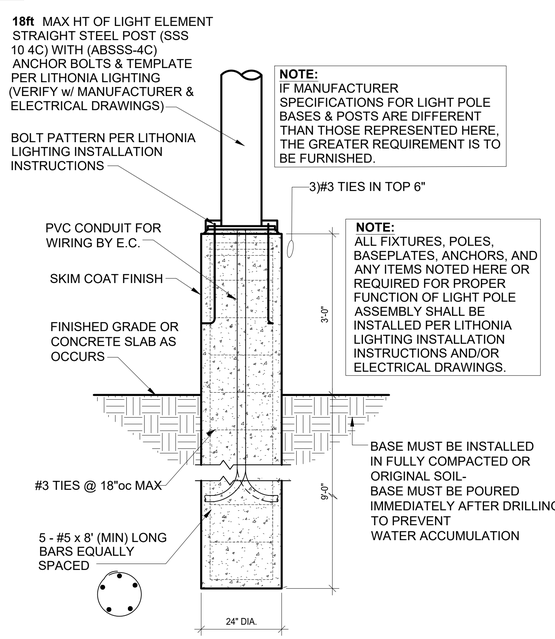

NOTE:
IF MANUFACTURER SPECIFICATIONS FOR LIGHT POLE BASES & POSTS ARE DIFFERENT THAN THOSE REPRESENTED HERE, THE GREATER REQUIREMENT IS TO BE FURNISHED.

NOTE:
ALL FIXTURES, POLES, BASEPLATES, ANCHORS, AND ANY ITEMS NOTED HERE OR REQUIRED FOR PROPER FUNCTION OF LIGHT POLE ASSEMBLY SHALL BE INSTALLED PER LITHONIA LIGHTING INSTALLATION INSTRUCTIONS AND/OR ELECTRICAL DRAWINGS.

G / S1.3 SIGN LIGHT BASE DETAIL
N.T.S.

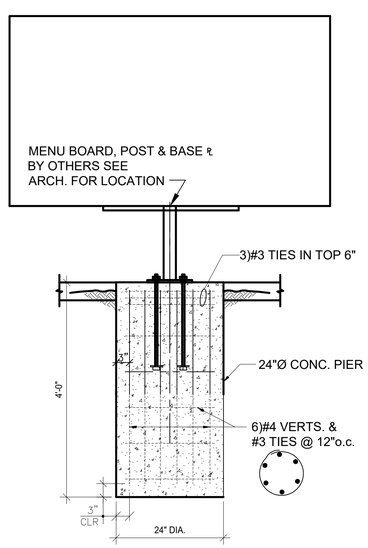

H / S1.3 MENU BOARD BASE DETAIL
N.T.S.

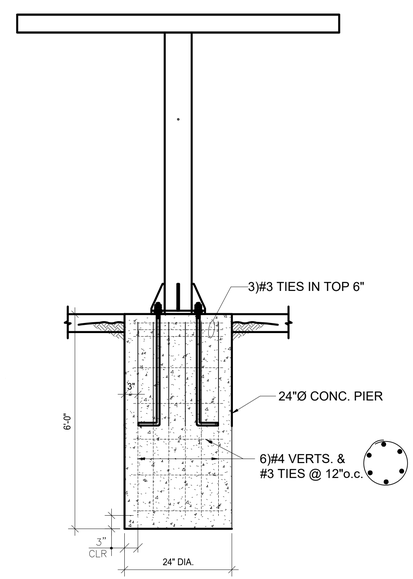

J / S1.3 CLEARANCE BAR BASE DETAIL
N.T.S.

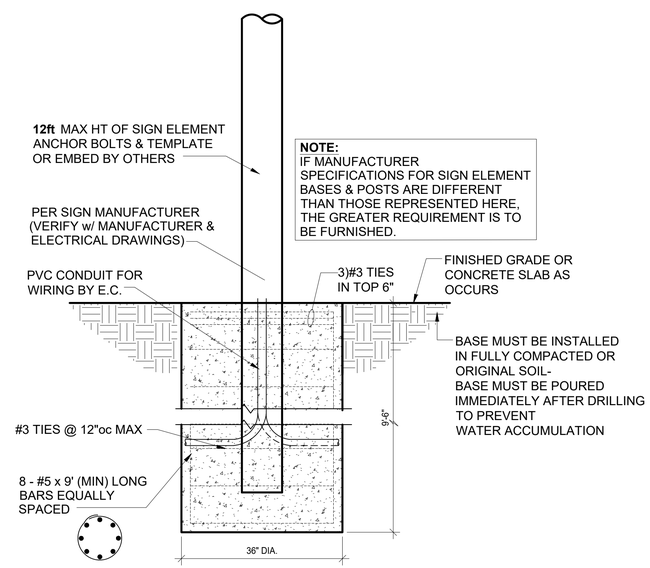

NOTE:
IF MANUFACTURER SPECIFICATIONS FOR SIGN ELEMENT BASES & POSTS ARE DIFFERENT THAN THOSE REPRESENTED HERE, THE GREATER REQUIREMENT IS TO BE FURNISHED.

K / S1.3 MONUMENT SIGN BASE DETAIL
N.T.S.

THE PROFESSIONAL ENGINEERS SEAL AFFIXED TO THIS SHEET INDICATES THAT THE NAMED ENGINEER HAS PREPARED OR DIRECTED THE PREPARATION OF, AND APPROVES AND ACCEPTS RESPONSIBILITY FOR, THE SEALED DOCUMENTS. NOT OPERATING THIS SEAL SHALL NOT BE CONSIDERED A REVOCATION OF THE SEAL. THE SEAL, FIRM NAMES, TITLES, SHEET NUMBERS AND SHALL ASSUME FULL RESPONSIBILITY FOR THE WORK HEREIN. ALTERATIONS TO THE DOCUMENTS MADE BY OTHERS WITHOUT THE PERMISSION OF THE PROFESSIONAL ENGINEER SEAL IS PROHIBITED. JOB NO. K21-0032

COPYRIGHT (C) 2021 KREHER ENGINEERING, INC. REPRODUCTION OF THIS DRAWING FOR SHOP DRAWINGS IS PERMITTED. ALL OTHER REPRODUCTIONS, THE SEAL, SHALL REMOVE ALL SEALS, FIRM NAMES, TITLES, SHEET NUMBERS AND SHALL ASSUME FULL RESPONSIBILITY FOR THE WORK HEREIN. ALTERATIONS TO THE DOCUMENTS MADE BY OTHERS WITHOUT THE PERMISSION OF THE PROFESSIONAL ENGINEER SEAL IS PROHIBITED.

ARCHITECT
CORALIC, LLC
EDIN CORALIC
9700 MACKENZIE ROAD, STE. 222
ST. LOUIS, MO 63123
p: 314.578.4953
e: edin@coralicarchitecture.com

STRUCTURAL ENGINEER
JAMES C. KREHER
JIM KREHER
208 N. MAIN STREET,
COLUMBIA, IL 62236
p: 618.281.8505
jimk@kreherengineering.com

MEP ENGINEER
Case Engineering
DARRELL R. CASE
796 MERUS CT.,
FENTON, MO 63026
T. 636.349.1600 F. 636.349.1730
dcase@caseengineringinc.com

JAMES C. KREHER
STRUCTURAL ENGINEER
PE-25562 Ex. 12-31-2021
STATE OF MISSOURI
JAMES C. KREHER
NUMBER E-25562
REGISTERED PROFESSIONAL ENGINEER
10-11-21

MISSOURI CERTIFICATE OF AUTHORITY NO. 2004012212

Project No: MO0102
Dutch Bros Coffee - New Freestanding Store
500 NW Chipman Road, Lee's Summit, Missouri 64086
for: Dutch Bros Coffee
110 SW 4th St.
Grants Pass, OR 97526

ISSUED FOR PERMIT:
10.11.2021

REV:	DATE:	DESCRIPTION:

SHEET NAME:
TYPICAL DETAILS

SHEET NUMBER:
S1.3

© 2020 DB Franchising USA, LLC

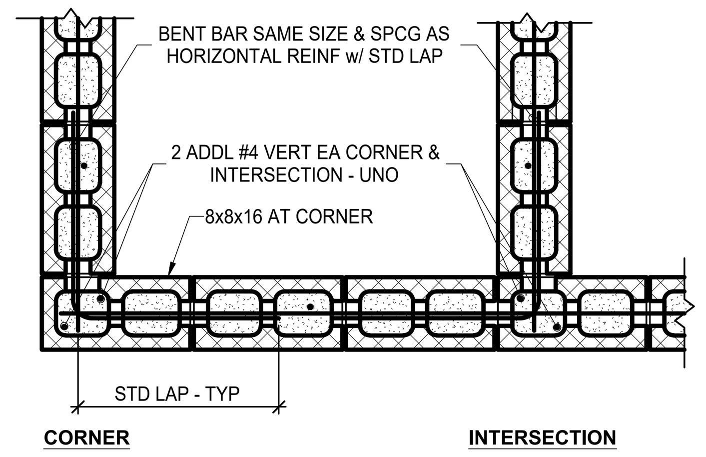

A S1.4 **TRASH ENCLOSURE - TYPICAL CMU WALL CORNERS & INTERSECTIONS**
N.T.S.

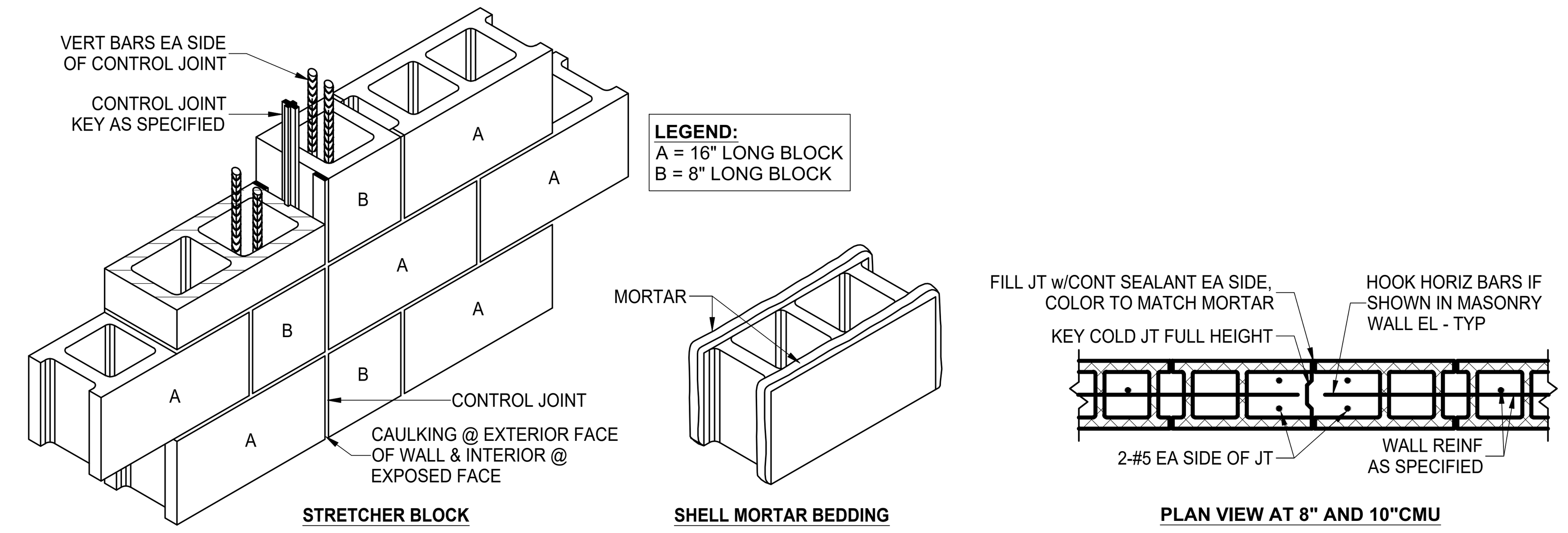

NOTES:
1. FIGURE ABOVE IS APPLICABLE TO THE CONSTRUCTION OF ALL CONTROL JOINTS IN THE 8" & 10" HOLLOW BLOCK WALLS EXCEPT WHERE STEEL OR CONCRETE COLUMNS OCCUR.
2. SEE ARCHITECTURAL DRAWINGS FOR JOINT SPACING/LOCATIONS

B S1.4 **TRASH ENCLOSURE - TYPICAL CMU WALL CONTROL JOINT DETAIL**
N.T.S.

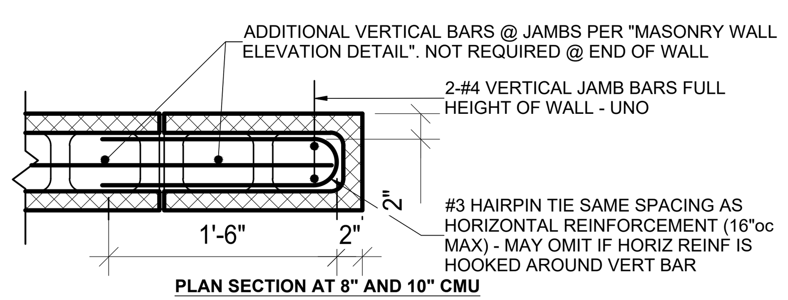

C S1.4 **TRASH ENCLOSURE - TYPICAL CMU JAMB DETAILS**
N.T.S.

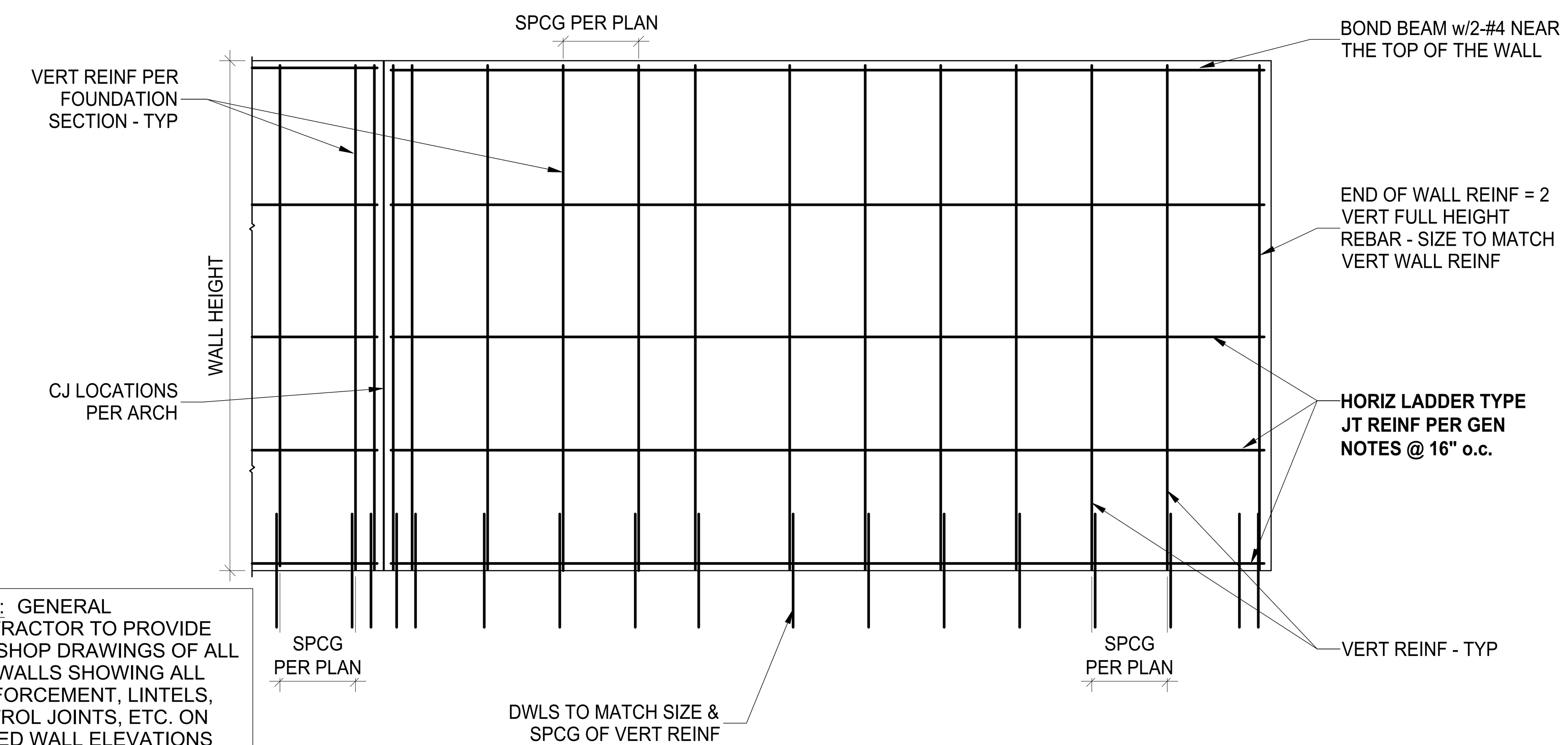

NOTE: GENERAL CONTRACTOR TO PROVIDE CMU SHOP DRAWINGS OF ALL CMU WALLS SHOWING ALL REINFORCEMENT, LINTELS, CONTROL JOINTS, ETC. ON SCALED WALL ELEVATIONS TO EOR FOR REVIEW PRIOR TO FABRICATION

D S1.4 **TRASH ENCLOSURE - TYPICAL REINFORCED MASONRY WALL ELEVATION (FOR SEISMIC DESIGN CATEGORY A,B,C ONLY)**
N.T.S.

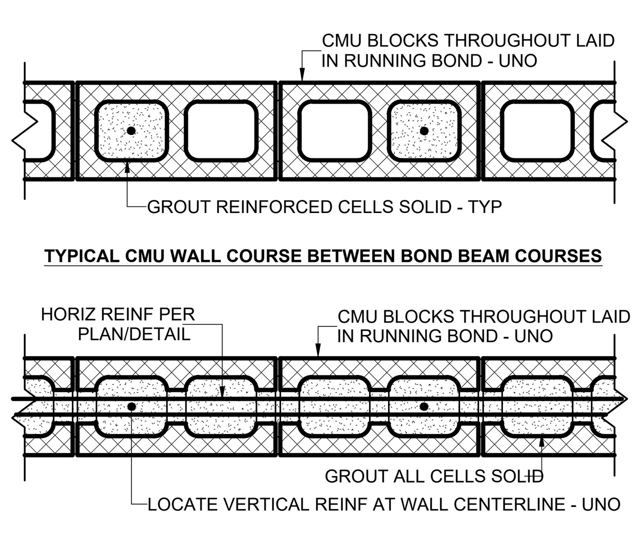

E S1.4 **TRASH ENCLOSURE - TYPICAL CMU WALL COURSES**
N.T.S.

THE PROFESSIONAL ENGINEERS SEAL AFFIXED TO THIS SHEET INDICATES THAT THE NAMED ENGINEER HAS PREPARED OR DIRECTED THE PREPARATION OF THE MATERIAL SHOWN ONLY ON THIS SHEET. OTHER DRAWINGS AND DOCUMENTS, NOT EXHIBITING THIS SEAL, SHALL NOT BE CONSIDERED PREPARED BY OR THE RESPONSIBILITY OF THE UNDERSIGNED. USE OF THE DRAWINGS WITHOUT THE PROFESSIONAL ENGINEERS SEAL IS PROHIBITED.
JOB NO. K21-002J

COPYRIGHT (C) 2021 KREHER ENGINEERING, INC. REPRODUCTION OF THIS DRAWING FOR SHOP DRAWINGS IS PERMITTED, BUT AT THE USERS RISK. THE USER SHALL REMOVE ALL SEALS, FIRM NAMES, TITLES, SHEET NUMBERS AND SHALL ASSUME FULL RESPONSIBILITY FOR THEIR ACCURACY, COMPLETENESS AND STATUS.

ARCHITECT
CORALIC, LLC
EDIN CORALIC
9700 MACKENZIE ROAD, STE. 222
ST. LOUIS, MO 63123
p: 314.578.4953
e: edin@coralicarchitecture.com

STRUCTURAL ENGINEER
JAMES C. KREHER
JIM KREHER
208 N. MAIN STREET,
COLUMBIA, IL 62236
p: 618.281.8505
jimk@kreherengineering.com

MEP ENGINEER
Case Engineering
DARRELL R. CASE
796 MERUS CT.,
FENTON, MO 63026
T. 636.349.1600 F. 636.349.1730
dcase@caseengineeringinc.com

JAMES C. KREHER
STRUCTURAL ENGINEER
PE-25562 Ex. 12-31-2021
STATE OF MISSOURI — JAMES C. KREHER — NUMBER E-25562 — REGISTERED PROFESSIONAL ENGINEER
10-11-21
MISSOURI CERTIFICATE OF AUTHORITY NO. 2004012212

Project No: MO0102
Dutch Bros Coffee - New Freestanding Store
500 NW Chipman Road, Lee's Summit, Missouri 64086
for: Dutch Bros Coffee
110 SW 4th St.
Grants Pass, OR 97526

ISSUED FOR PERMIT:
10.11.2021

REV:	DATE:	DESCRIPTION:

SHEET NAME:
TYPICAL DETAILS

SHEET NUMBER:
S1.4

© 2020 DB Franchising USA, LLC

SILL PL BOLTS & SOLE PL SCREWS SCHEDULE			
MARK	WALL SIDES SHEATHED	FASTENER SPACING "B"	
		BOLT	SCREW
6	1	48"	14"
	2	32"	9"
4	1	44"	12"
	2	22"	6"
3	1	34"	8"
	2	16"	4"

WALL SHEATHING AND NAILING SCHEDULE					
MARK	SHTG SPEC	NAIL SIZE	EN SPCG "E"	JT & STUD BLKG	SILL PL
6	15/32"***	10d	6"	2x*	2x*
4	15/32"***	10d	4"	2x*	2x*
3	15/32"***	10d	3"	3x**	2x*

* 3x WHERE WALL IS SHEATHED BOTH SIDES
**DOUBLE 2x MAYBE USED IN LIEU OF 3x.
FACE NAIL w/16d @ 12"oc STAGGERD FULL HEIGHT
***APA RATED SHEATHING

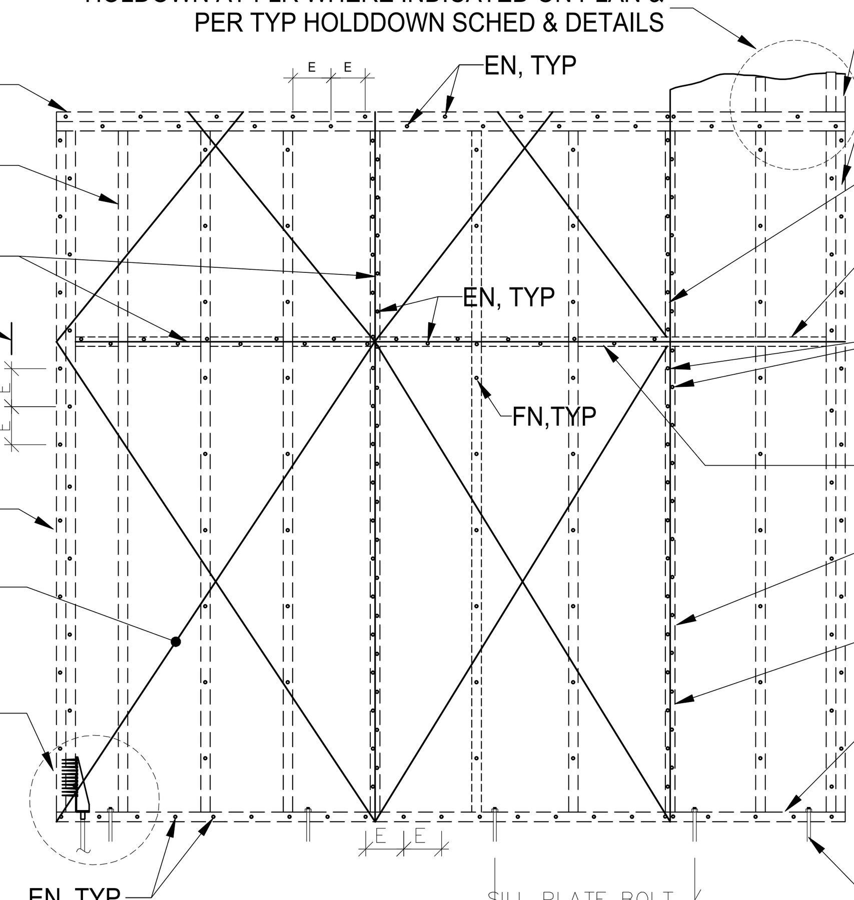

NOTES:

1. FIELD NAILING (FN): 10d @ 12"oc.
2. ALL NAILS SHALL BE COMMON WIRE NAILS.
3. MINIMUM DIMENSION OF ANY SHEATHING SHEET EQUALS 16" OR STUD SPACING, WHICHEVER IS GREATER.
4. SOLE PLATES SHALL BE FASTENED WITH SDS25412 SCREWS (SDS25600 @ 3x SOLE PLATES) PER THE SCHEDULE ABOVE. FOR SPACING LESS THAN 8", PRE-DRILL HOLES 3/16"dia.
5. ALL SHEAR WALL SHEATHING PANEL EDGES SHALL BE FULLY BLOCKED WITH FULL DEPTH 2x OR 3x STUD BLOCKING - TYP - UNO.

A TYPICAL SHEAR WALL SHEATHING AND FASTENER SCHEDULE
S1.5 N.T.S.

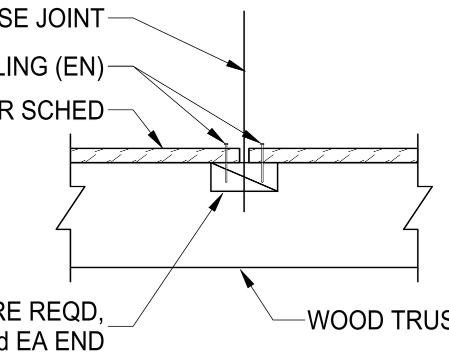

SECTION A-A

DIAPHRAGM SHEATHING & NAILING SCHEDULE							
MARK	SHT'G SPEC	NAILS SIZE	BN SPC'G	EN SPC'G	FN SPC'G	TRANSV BLK'G	EDGE MEMBER THICK
R1	19/32"***	10d	6"	6"	12"	NO	2"
*** APA RATED SHEATHING							

NOTE:
1. DIAPHRAGM SHEATHING NAILS SHALL BE DRIVEN SO THAT THEIR HEADS ARE FLUSH WITH THE SURFACE OF THE SHEATHING.
2. PROVIDE H-CLIPS PER GENERAL NOTES AT PANEL EDGES OR TONGUE AND GROOVE SHEATHING WHEN TRANSVERSE BLOCKING IS NOT REQUIRED.

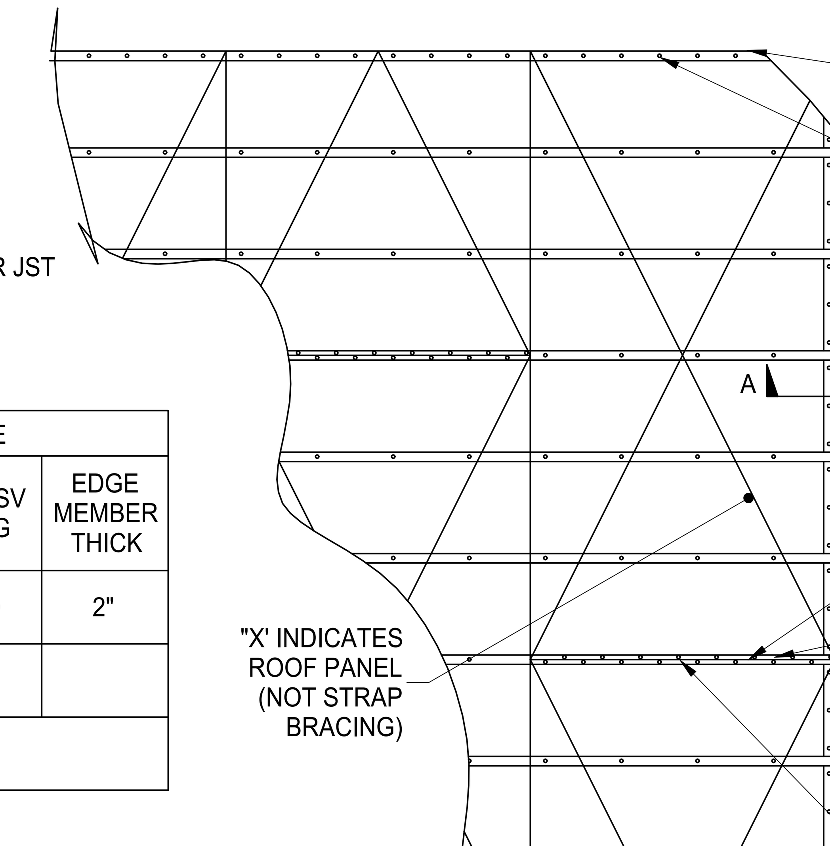

B TYPICAL ROOF SHEATHING DETAIL
S1.5 N.T.S.

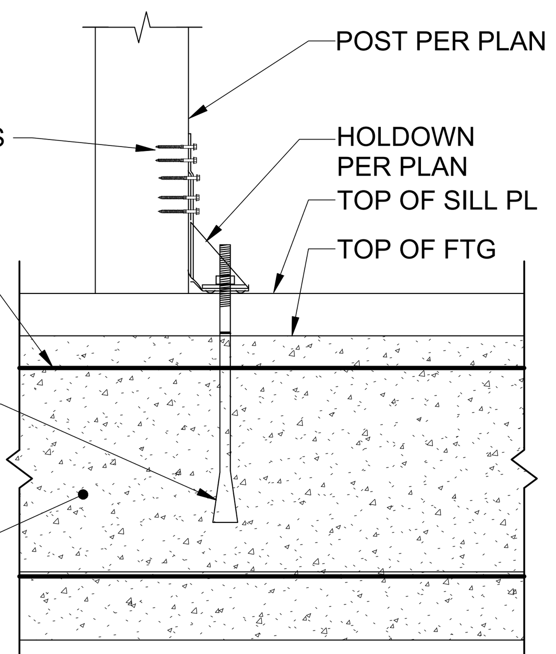

MARK	HOLDOWN	ANCHOR BOLT DIA	EDGE DIST FOR AB'S	SCREWS
A	HTT5KT	5/8" ADHESIVE ANCH (10" EMBED) INTO TRENCH FTG.	3" -TYP	(26) #10
B	HDU 8	7/8" ADHESIVE ANCH (10" EMBED) INTO TRENCH FTG.	3" -TYP	(20) 1/4"
C	HDU 11	1" ADHESIVE ANCH (12" EMBED) INTO TRENCH FTG.	3" -TYP	(30) 1/4"
D	HDU 14	1" ADHESIVE ANCH (12" EMBED) INTO TRENCH FTG.	3" -TYP	(36) 1/4"

NOTES:
1. HOLDOWN ANCHOR BOLTS SHALL BE HOT-DIP GALVANIZED (ASTM A153).
2. ALL FASTENERS INSTALLED IN FIRE-RETARDANT TREATED WOOD SHALL BE HOT-DIP GALVANIZED (ASTM A153) OR STAINLESS STEEL (TYPE 304 OR 316).
3. STEP DOWN FOOTING PER TYPICAL DETAIL WHERE REQUIRED TO ACHIEVE MINIMUM ANCHOR BOLT EMBEDMENT.
4. HOLDDOWN SCREWS SHALL BE SIMPSON SDS25212 @ HDU & SD10212 @ HTT (UNLESS NOTED OTHERWISE).

* SEE SCHEDULE ON TYPICAL SHEAR WALL DETAIL FOR SHEATHING EDGE NAILING.
** WHERE HOLDOWN OCCURS ADJACENT TO A POST ON THE PLAN, USE THE LARGER OF THE INDICATED POST OR THE SCHEDULE END STUDS.

C TYPICAL HOLDOWN SCHEDULE & DETAILS
S1.5 N.T.S.

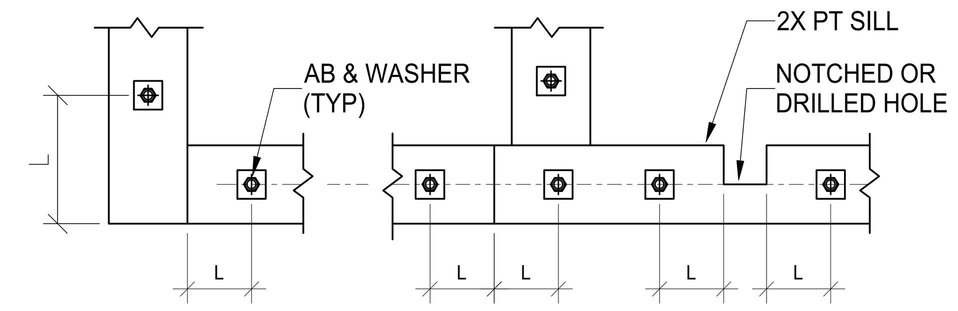

NOTES:

1. TYPICAL ANCHOR BOLT END DISTANCE L = 4 1/2" MIN, 12" MAX.
2. ANCHOR BOLTS SHALL BE INSTALLED AT 12" MAXIMUM FROM EACH END OF EACH SILL PLATE PIECE, AND SHALL BE SPACED AT 48" ON CENTER MAXIMUM. SEE TYPICAL SHEAR WALL DETAIL FOR ANCHOR BOLT SPACING AT SHEAR WALLS.
3. WHERE SILL PLATE IS NOTCHED, DRILLED OR CUT MORE THAN ONE THIRD OF ITS WIDTH, INSTALL ANCHOR BOLT EACH SIDE AS SHOWN. NOTCHES, CUTS AND HOLES SHALL BE TREATED WITH A PRESERVATIVE SOLUTION CONFORMING TO AWPA STANDARD M4.
4. MINIMUM ANCHOR BOLT EMBEDMENT SHALL BE 7", MEASURED FROM TOP OF THE CONCRETE SLAB. FOR ANCHOR BOLTS EMBEDED IN CONCRETE CURBS **NOT** POURED MONOLITHICALLY WITH THE FOUNDATION (NON-INTEGRAL CURBS), THE LENGTH OF ANCHOR BOLT IN CONCRETE CURBS SHALL NOT APPLY TO THIS MINIMUM EMBEDMENT.
5. ANCHOR BOLTS WITH DAMAGED THREADS SHALL NOT BE USED.
6. WHERE SILL PLATE ANCHORS MUST BE POST-INSTALLED, PROVIDE 1/2"dia x 6" SIMPSON TITEN HD STAINLESS STEEL SCREW ANCHORS (INTEGRAL CURBS ONLY, OR NO CURB), OR 5/8"dia x (7" + CURB HEIGHT) STAINLESS STEEL THREADED ROD ANCHORS INSTALL w/ HILTI HIT-HY 200 ADHESIVE OR EQUIVALENT. POST-INSTALLED ANCHORS SHALL NOT REPLACE HOLDOWN ANCHOR BOLTS UNLESS ALLOWED IN THE HOLDOWN SCHEDULE.

D SILL PLATE ANCHOR BOLT DETAIL
S1.5 N.T.S.

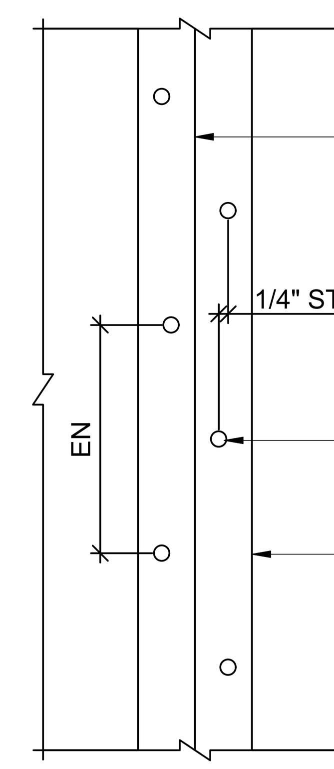

E TYP STAGGERED EDGE NAILING DETAIL
S1.5 N.T.S.

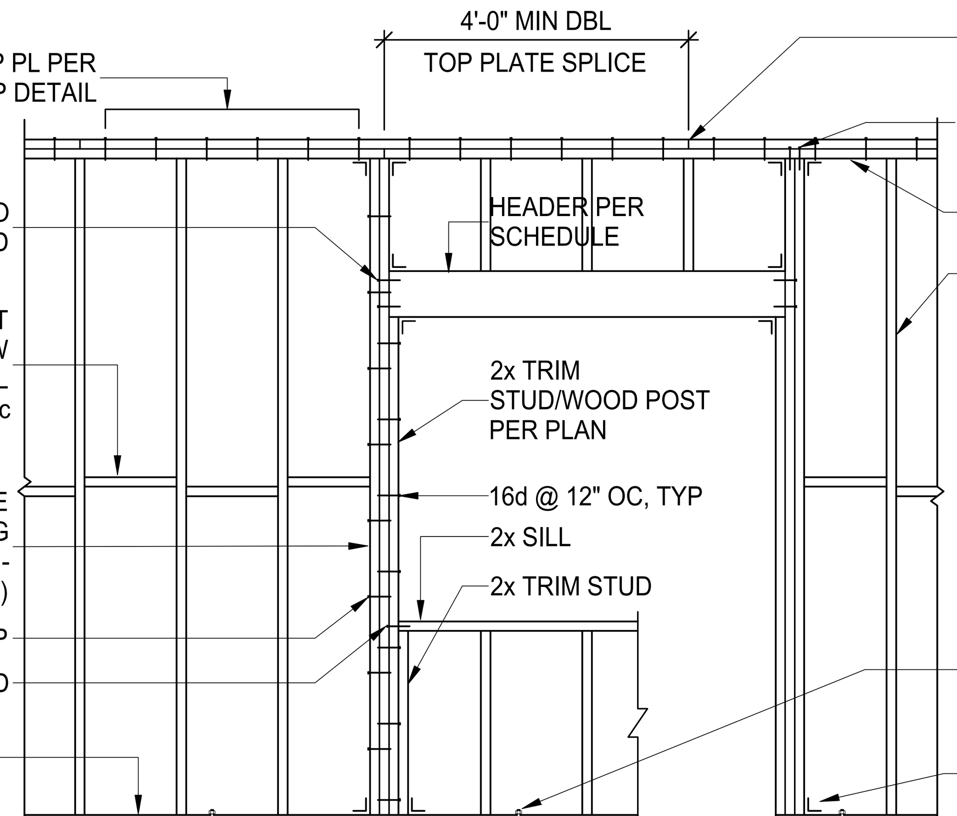

NOTES:
1. POWDER-ACTUATED FASTENERS (SHOT PINS) AND EXPANSION ANCHORS SHALL NOT BE USED TO ANCHOR WALLS ON CURBS OR AT SLAB EDGES.
2. HOLDOWN ANCHOR BOLTS SHALL NOT REPLACE SILL PLATE ANCHOR BOLTS.

F TYPICAL STRUCTURAL WALL PANEL FRAMING ELEVATION
S1.5 N.T.S.

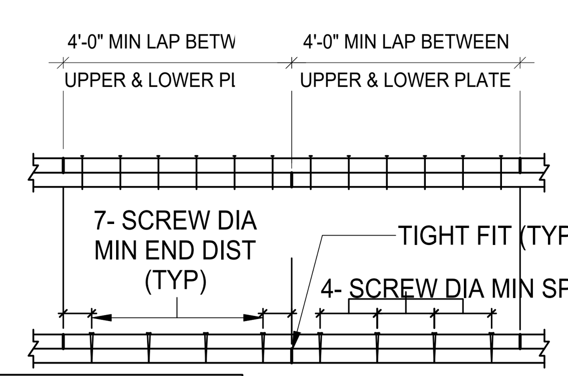

NAILED SPLICE SCHEDULE	
MARK	NAILS
A	8 - 16d
B	10 - 16d
C	12 - 16d

SCREWED SPLICE SCHEDULE	
MARK	SDS 1/4 SCREWS
D	6 - 1/4" SCREWS
E	12 - 1/4" SCREWS
F	24 - 1/4" SCREWS

NOTES:

1. SPLICE 2x DOUBLE TOP PLATES PER MARK "A" AND 3x DOUBLE TOP PLATES PER MARK "D" OF THE ABOVE SCHEDULE, UNLESS OTHERWISE INDICATED.
2. SCREWS SHALL BE 3" LONG FOR 2x PLATES AND 5" LONG FOR 3x PLATES.
3. JOINTS IN UPPER AND LOWER PLATE SHALL BE CENTERED OVER STUD OR MULLION.
4. ALL NAILS SHALL BE COMMON WIRE NAILS.
5. SCHEDULE INDICATES NUMBER OF NAILS OR SCREWS ON EACH SIDE OF EACH JOINT.

G TYPICAL TOP PLATE SPLICE DETAIL
S1.5 N.T.S.

THE PROFESSIONAL ENGINEERS SEAL AFFIXED TO THIS SHEET INDICATES THAT THE NAMED ENGINEER HAS PREPARED OR DIRECTED THE PREPARATION OF THE MATERIAL SHOWN ONLY ON THIS SHEET. OTHER DRAWINGS AND DOCUMENTS, NOT EXHIBITING THIS SEAL, SHALL NOT BE CONSIDERED PREPARED BY OR THE RESPONSIBILITY OF THE UNDERSIGNED. USE OF THE DRAWINGS WITHOUT THE PROFESSIONAL ENGINEERS SEAL IS PROHIBITED. JOB NO. K21-002J

COPYRIGHT (C) 2021 KREHER ENGINEERING, INC. REPRODUCTION OF THIS DRAWING FOR SHOP DRAWINGS IS PERMITTED, BUT AT THE USERS RISK. THE USER SHALL REMOVE ALL SEALS, FIRM NAMES, TITLES, SHEET NUMBERS AND SHALL ASSUME FULL RESPONSIBILITY FOR THEIR ACCURACY, COMPLETENESS AND STATUS.

DUTCH BROS Coffee

CORALIC ARCHITECTURE

ARCHITECT
CORALIC, LLC
EDIN CORALIC
9700 MACKENZIE ROAD, STE. 222
ST. LOUIS, MO 63123
p: 314.578.4953
e: edin@coralicarchitecture.com

STRUCTURAL ENGINEER
JAMES C. KREHER
JIM KREHER
208 N. MAIN STREET,
COLUMBIA, IL 62236
p: 618.281.8505
jimk@kreherengineering.com

MEP ENGINEER
Case Engineering
DARRELL R. CASE
796 MERUS CT.,
FENTON, MO 63026
T. 636.349.1600 F. 636.349.1730
dcase@caseengineeringinc.com

JAMES C. KREHER
STRUCTURAL ENGINEER
PE-25562 Ex. 12-31-2021

STATE OF MISSOURI — JAMES C. KREHER — NUMBER E-25562 — REGISTERED PROFESSIONAL ENGINEER
10-11-21

MISSOURI CERTIFICATE OF AUTHORITY NO. 2004012212

Project No: MO0102
Dutch Bros Coffee - New Freestanding Store
500 NW Chipman Road. Lee's Summit, Missouri 64086
for: Dutch Bros Coffee
110 SW 4th St.
Grants Pass, OR 97526

ISSUED FOR PERMIT:
10.11.2021

REV:	DATE:	DESCRIPTION:

SHEET NAME:
TYPICAL DETAILS

SHEET NUMBER:
S1.5

© 2020 DB Franchising USA, LLC

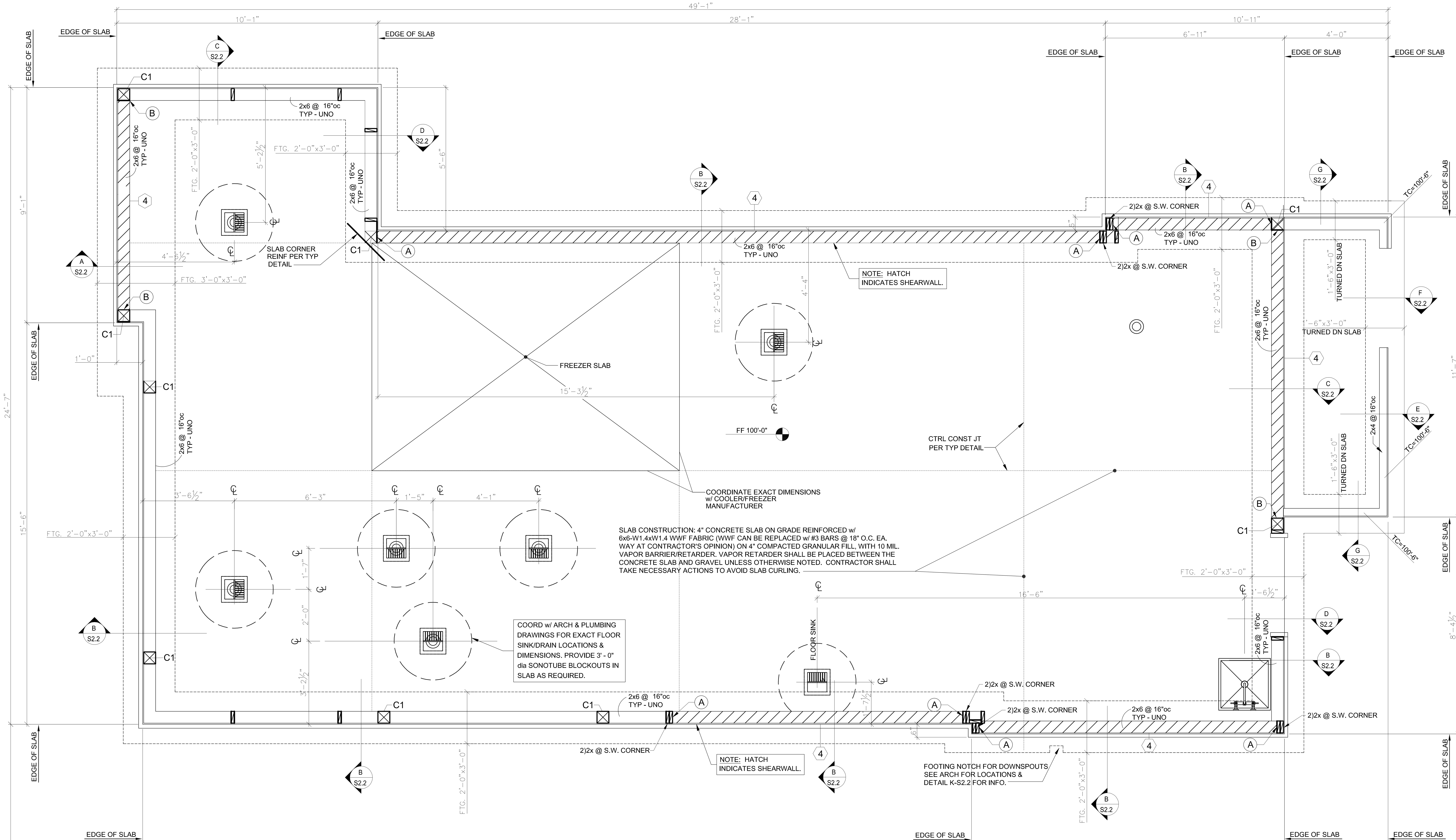

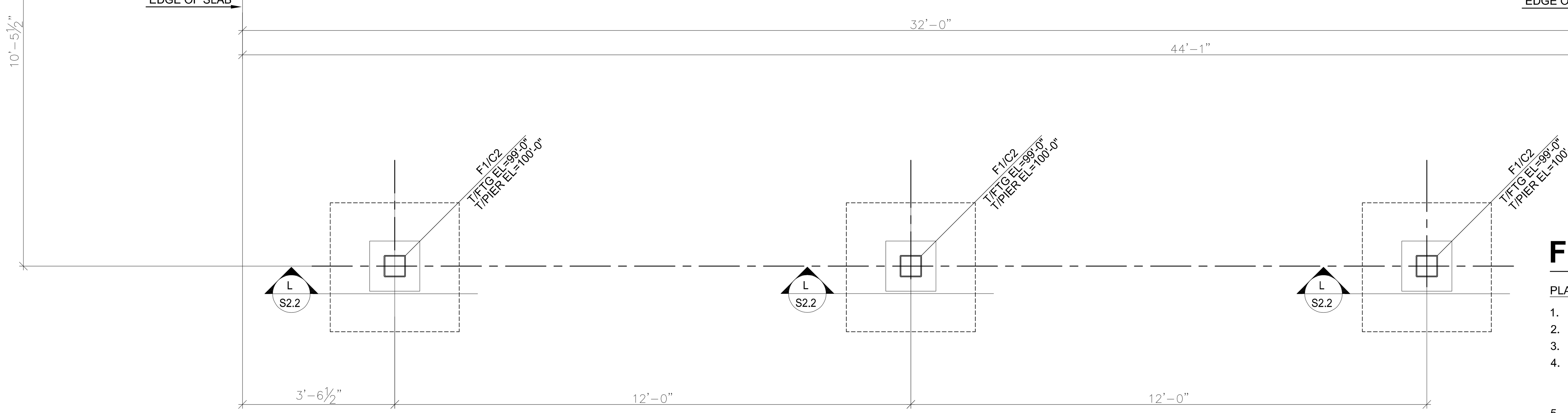

FOUNDATION NOTES:
FOUNDATIONS SHALL BEAR ON A MINIMUM OF 6" OF COMPACTED ODOT TYPE A AGGREGATE BASE PLACED ACROSS NATIVE SAND SOILS. OVEREXCAVATION MAY BE REQUIRED IN SOME AREAS TO REACH NATIVE SAND LAYERS.
OVEREXCAVATION SHALL EXTEND 9" LATERALLY FOR EVERY 12" DEPTH INCREASE. OVEREXCAVATION SHALL BE BACKFILLED WITH ODOT TYPE A AGGREGATE BASE AND COMPACTED PER GEOTECHNICAL REQUIREMENTS. SEE GEOTECHNICAL REPORT FOR ADDITIONAL INFORMATION AND REQUIREMENTS.

SLAB NOTES:
FLOOR SLAB BEARING MATERIALS SHALL BE OVEREXCAVATED A MINIMUM OF 18" BELOW 4" AGGREGATE BASE AND BACKFILLED WITH 18" OF LOW VOLUME CHANGE FILL. OVEREXCAVATION SHALL EXTEND AT LEAST 5' LATERALLY BEYOND THE BUILDING LIMITS. COORDINATE COMPACTION AND LIFT LAYER REQUIREMENTS WITH GEOTECHNICAL ENGINEER. SEE GEOTECHNICAL REPORT FOR ADDITIONAL INFORMATION AND REQUIREMENTS.

FOUNDATION PLAN

SCALE: 1/2" = 1'-0"

PLAN NOTES

1. SEE SHEETS S1.1 - S1.5 FOR GENERAL NOTES AND TYPICAL DETAILS.
2. SEE ARCHITECTURAL DRAWINGS FOR DIMENSIONS, SECTIONS, AND ELEVATIONS NOT SHOWN HEREON.
3. COORDINATE SIZE AND LOCATION OF ROUGH OPENINGS IN FLOOR OR WALLS WITH ARCHITECTURAL DRAWINGS.
4. ALL ELEVATIONS ARE REFERENCED FROM FINISHED MAIN FLOOR = 100'-0"
   T/FTG = TOP OF FOOTING = 99'-4" UNLESS NOTED OTHERWISE
   T/CONC = TOP OF CONCRETE = 100'-0" UNLESS NOTED OTHERWISE
5. ALL EXTERIOR WALL SHEATHING NOT SPECIFIED AS "SHEAR WALL SHEATHING" IS TO BE 1/2" PLYWOOD SHEATHING AND ATTACHED PER IBC TABLE 2304.10.1 (SEE WOOD FRAMING GENERAL NOTES) UNLESS OTHERWISE INDICATED BY ARCHITECT.

LEGEND - FOUNDATION PLAN

- (X) INDICATES HOLDOWN PER TYPICAL DETAIL
- (X) INDICATES WOOD SHEAR WALL SHEATHING PER TYPICAL DETAIL
- C1 INDICATES POST OR COLUMN PER SCHEDULE (NOTE THAT SOME POSTS REQUIRE HOLDOWNS)
- INDICATES EDGE OF FOOTING
- INDICATES EDGE OF SLAB AT DOOR OPENING
- INDICATES STRUCTURAL WALL FRAMED WITH 2x6 STUDS @ 16"oc

WOOD POST SCHEDULE

MARK	SIZE
C1	6x6 WOOD POST

COLUMN SCHEDULE

MARK	SIZE
C2	HSS5x5x¼ W/ B. ¾"x11"x11" W/4)¾"Øx12" EMBED. F1554 GR 36 A.B.

FOOTING SCHEDULE

MARK	SIZE
F1	3'-0"x3'-0"x2'-0" 3)#5 E.W. TOP & BOT.

ARCHITECT
CORALIC, LLC
EDIN CORALIC
9700 MACKENZIE ROAD, STE. 222
ST. LOUIS, MO 63123
p: 314.578.4953
e: edin@coralicarchitecture.com

STRUCTURAL ENGINEER
JAMES C. KREHER
JIM KREHER
208 N. MAIN STREET,
COLUMBIA, IL 62236
p: 618.281.8505
jimk@kreherengineering.com

MEP ENGINEER
Case Engineering
DARRELL R. CASE
796 MERUS CT.,
FENTON, MO 63026
T. 636.349.1600 F. 636.349.1730
dcase@caseengineeringinc.com

JAMES C. KREHER
STRUCTURAL ENGINEER
PE-25562 Ex. 12-31-2021
STATE OF MISSOURI — JAMES C. KREHER — NUMBER E-25562 — REGISTERED PROFESSIONAL ENGINEER
10-11-21
MISSOURI CERTIFICATE OF AUTHORITY NO. 2004012212

Project No: MO0102
Dutch Bros Coffee - New Freestanding Store
500 NW Chipman Road, Lee's Summit, Missouri 64086
for: Dutch Bros Coffee
110 SW 4th St.
Grants Pass, OR 97526

ISSUED FOR PERMIT:
10.11.2021

REV.	DATE:	DESCRIPTION:

SHEET NAME:
FOUNDATION PLAN

SHEET NUMBER:
S2.1

© 2020 DB Franchising USA, LLC

THE PROFESSIONAL ENGINEERS SEAL AFFIXED TO THIS SHEET INDICATES THAT THE NAMED ENGINEER HAS PREPARED OR DIRECTED THE PREPARATION OF THE MATERIAL SHOWN ONLY ON THIS SHEET. OTHER DRAWINGS AND DOCUMENTS, NOT EXHIBITING THIS SEAL, SHALL NOT BE CONSIDERED PREPARED BY OR THE RESPONSIBILITY OF THE UNDERSIGNED. USE OF THE DRAWINGS WITHOUT THE PROFESSIONAL ENGINEERS SEAL IS PROHIBITED.
JOB NO. K21-002J

COPYRIGHT (C) 2021 KREHER ENGINEERING, INC. REPRODUCTION OF THIS DRAWING FOR SHOP DRAWINGS IS PERMITTED, BUT AT THE USERS RISK. THE USER SHALL REMOVE ALL SEALS, FIRM NAMES, TITLES, SHEET NUMBERS AND SHALL ASSUME FULL RESPONSIBILITY FOR THEIR ACCURACY, COMPLETENESS AND STATUS.

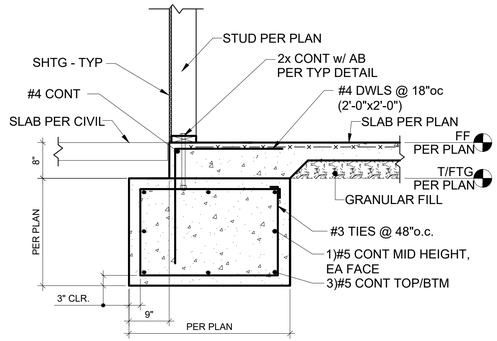

A S2.2 **FOUNDATION SECTION**
3/4" = 1'-0"

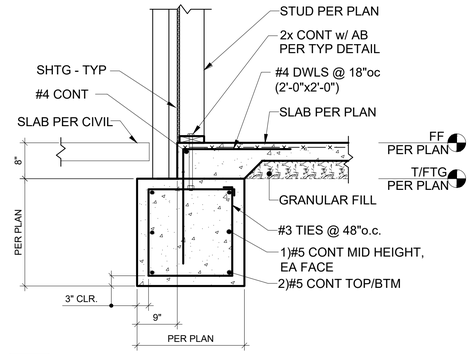

B S2.2 **FOUNDATION SECTION**
3/4" = 1'-0"

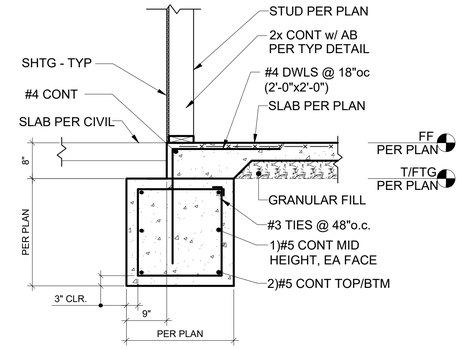

C S2.2 **FOUNDATION SECTION**
3/4" = 1'-0"

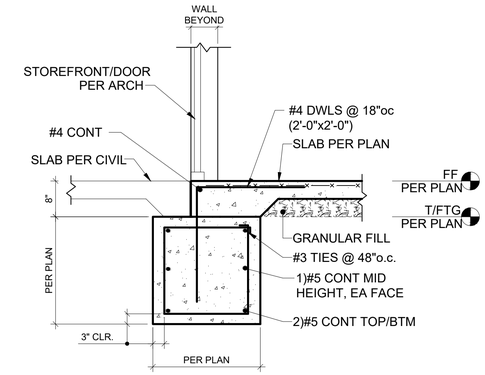

D S2.2 **FOUNDATION SECTION**
3/4" = 1'-0"

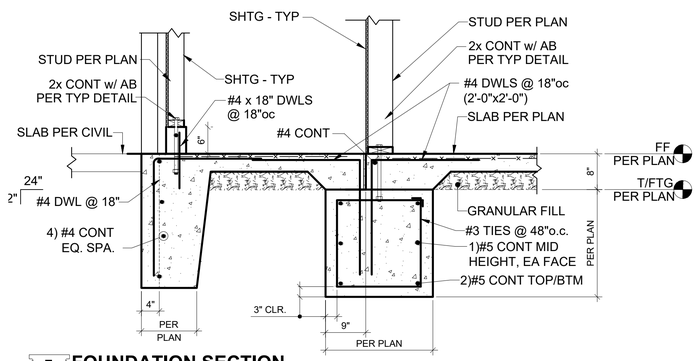

E S2.2 **FOUNDATION SECTION**
3/4" = 1'-0"

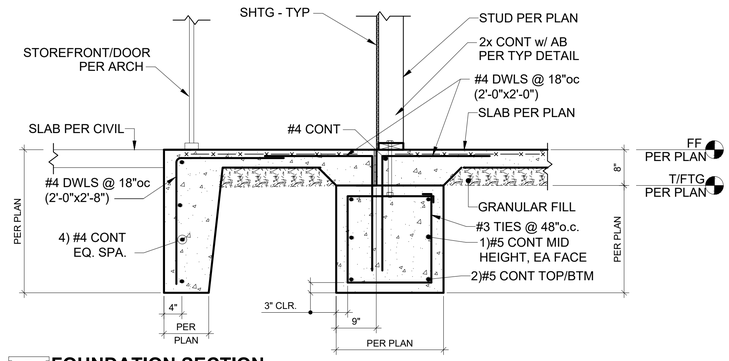

F S2.2 **FOUNDATION SECTION**
3/4" = 1'-0"

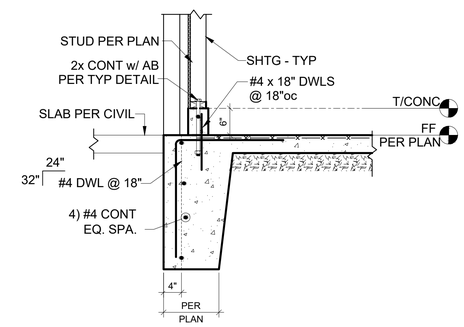

G S2.2 **FOUNDATION SECTION**
3/4" = 1'-0"

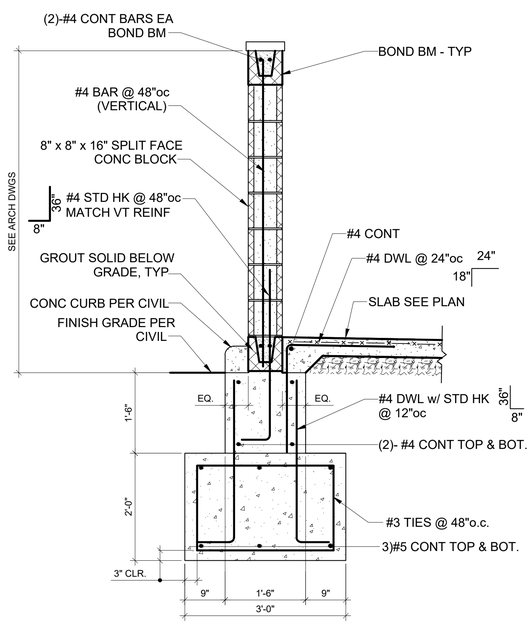

H S2.2 **TRASH ENCLOSURE DETAIL**
N.T.S.

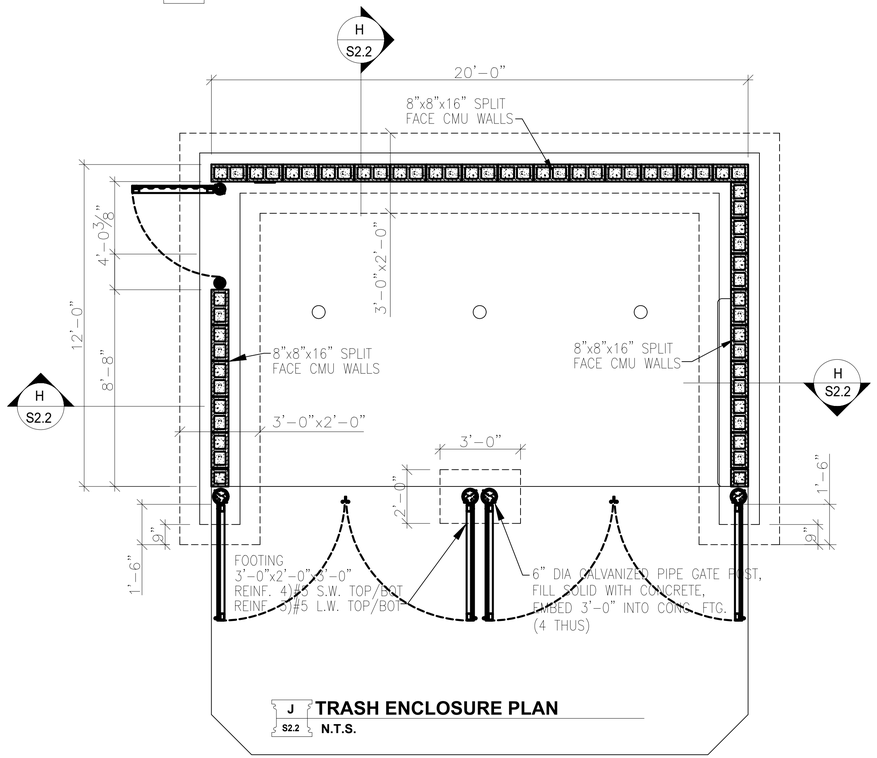

J S2.2 **TRASH ENCLOSURE PLAN**
N.T.S.

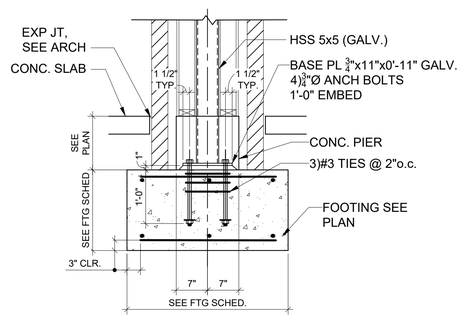

L S2.2 **CANOPY COL DETAIL**
N.T.S.

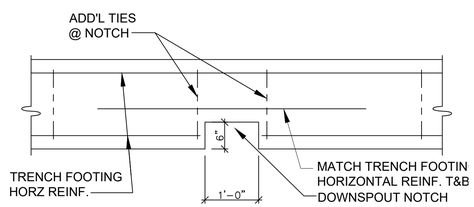

K S2.2 **FOOTING NOTCH @ DOWNSPOUTS**
N.T.S.

THE PROFESSIONAL ENGINEERS SEAL AFFIXED TO THIS SHEET INDICATES THAT THE NAMED ENGINEER HAS PREPARED OR DIRECTED THE PREPARATION OF THE DRAWINGS AND SPECIFICATIONS BEARING THE SEAL, AND THESE DOCUMENTS, NOT BEARING THE SEAL, SHALL NOT BE CONSIDERED AS THE WORK OF THE PROFESSIONAL ENGINEER UNLESS OTHERWISE STATED. PREPARED BY OR UNDER THE RESPONSIBILITY OF THE UNDERSIGNED ENGINEER: JOB NO. K21-0032

COPYRIGHT (C) 2021 WEBER ENGINEERING, INC.
REPRODUCTION OF THIS DRAWING FOR SHOP DRAWINGS OR FABRICATION PURPOSES IS PERMITTED. ALL OTHER USES SHALL REMAIN RESERVED. ALL SEALS, FIRM NAMES, TITLES, SHEET NUMBERS AND SHALL ASSUME FULL RESPONSIBILITY FOR THEIR ACCURACY, COMPLETENESS AND STATUS.

DUTCH BROS COFFEE

CORALIC ARCHITECTURE

ARCHITECT
CORALIC, LLC
EDIN CORALIC
9700 MACKENZIE ROAD, STE. 222
ST. LOUIS, MO 63123
p: 314.578.4953
e: edin@coralicarchitecture.com

STRUCTURAL ENGINEER
JAMES C. KREHER
JIM KREHER
208 N. MAIN STREET,
COLUMBIA, IL 62236
p: 618.281.8505
jimk@kreherengineering.com

MEP ENGINEER
Case Engineering
DARRELL R. CASE
796 MERUS CT.,
FENTON, MO 63026
T. 636.349.1600 F. 636.349.1730
dcase@caseengineringinc.com

JAMES C. KREHER
STRUCTURAL ENGINEER
PE-25562 Ex. 12-31-2021
STATE OF MISSOURI
JAMES C. KREHER
NUMBER E-25562
REGISTERED PROFESSIONAL ENGINEER
10-11-21

MISSOURI CERTIFICATE OF
AUTHORITY NO. 2004012212

Project No: MO0102

Dutch Bros Coffee - New Freestanding Store

500 NW Chipman Road, Lee's Summit, Missouri 64086
for: Dutch Bros Coffee
110 SW 4th St.
Grants Pass, OR 97526

ISSUED FOR PERMIT:
10.11.2021

REV:	DATE:	DESCRIPTION:

SHEET NAME:

FOUNDATION SECTIONS

SHEET NUMBER:

S2.2

© 2020 DB Franchising USA, LLC

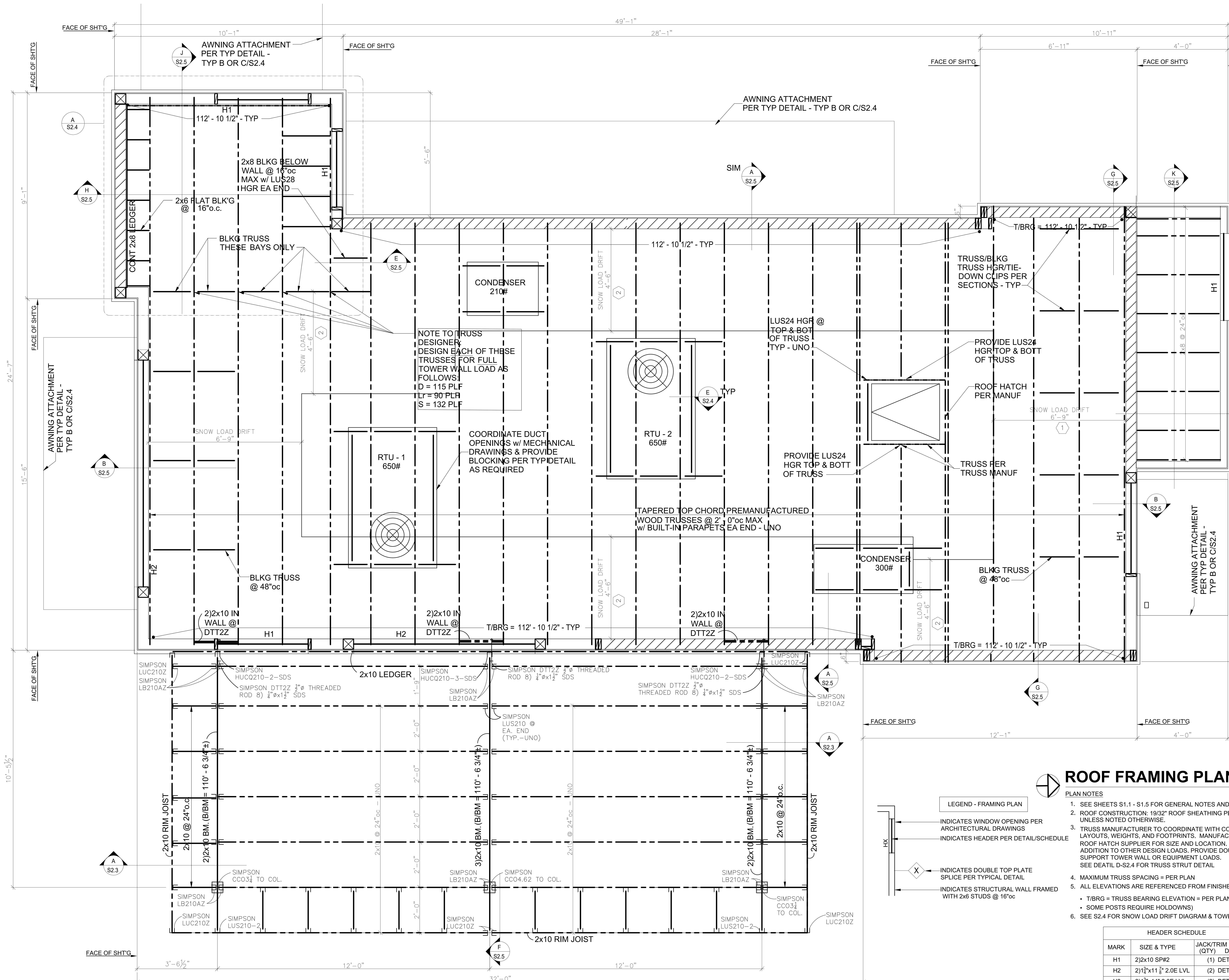

ROOF FRAMING PLAN

SCALE: 1/2" = 1'-0"

A / S2.3 FRAMING SECTION
1/2" = 1'-0"

LEGEND - FRAMING PLAN

- INDICATES WINDOW OPENING PER ARCHITECTURAL DRAWINGS
- INDICATES HEADER PER DETAIL/SCHEDULE
- X INDICATES DOUBLE TOP PLATE SPLICE PER TYPICAL DETAIL
- INDICATES STRUCTURAL WALL FRAMED WITH 2x6 STUDS @ 16"oc

PLAN NOTES

1. SEE SHEETS S1.1 - S1.5 FOR GENERAL NOTES AND TYPICAL DETAILS.
2. ROOF CONSTRUCTION: 19/32" ROOF SHEATHING PER MARK R1, SEE DET. B-S1.5 UNLESS NOTED OTHERWISE.
3. TRUSS MANUFACTURER TO COORDINATE WITH CONTRACTORS TO DETERMINE RTU LAYOUTS, WEIGHTS, AND FOOTPRINTS. MANUFACTURER TO COORDINATE WITH ROOF HATCH SUPPLIER FOR SIZE AND LOCATION. RTU LOADS ARE IN ADDITION TO OTHER DESIGN LOADS. PROVIDE DOUBLE TRUSSES IF REQUIRED TO SUPPORT TOWER WALL OR EQUIPMENT LOADS. SEE DEATIL D-S2.4 FOR TRUSS STRUT DETAIL
4. MAXIMUM TRUSS SPACING = PER PLAN
5. ALL ELEVATIONS ARE REFERENCED FROM FINISHED MAIN FLOOR = 100'-0"
   - T/BRG = TRUSS BEARING ELEVATION = PER PLAN
   - SOME POSTS REQUIRE HOLDOWNS)
6. SEE S2.4 FOR SNOW LOAD DRIFT DIAGRAM & TOWER FRAMING PLAN

HEADER SCHEDULE		
MARK	SIZE & TYPE	JACK/TRIM STUDS (QTY) DETAIL
H1	2)2x10 SP#2	(1) DET A-A
H2	2)1 3/4"x11 7/8" 2.0E LVL	(2) DET A-A
H3	2)1 3/4"x14" 2.0E LVL	(2) DET A-A
H4	2)2x8 SP#2	(1) DET A-A
H5	2)2x12 SP#2	(2) DET A-A

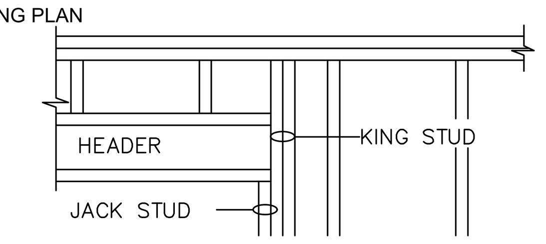

WOOD BEARING DETAIL
A/A SECTION
SCALE: NTS

THE PROFESSIONAL ENGINEERS SEAL AFFIXED TO THIS SHEET INDICATES THAT THE NAMED ENGINEER HAS PREPARED OR DIRECTED THE PREPARATION OF THE MATERIAL SHOWN ON THIS SHEET. OTHER DRAWINGS AND DOCUMENTS NOT EXHIBITING THIS SEAL SHALL NOT BE CONSIDERED PREPARED BY OR THE RESPONSIBILITY OF THE UNDERSIGNED. JOB NO. K21-002J

COPYRIGHT (C) 2021 KREHER ENGINEERING, INC. REPRODUCTION OR REUSE OF THIS DRAWING OR SHOP DRAWINGS IS PROHIBITED WITHOUT THE CONSENT OF THE ENGINEER. USE OF THE DRAWINGS, NUMBERS AND SHALL ASSUME FULL RESPONSIBILITY FOR THEIR ACCURACY, COMPLETENESS AND STATUS.

ARCHITECT
CORALIC, LLC
EDIN CORALIC
9700 MACKENZIE ROAD, STE. 222
ST. LOUIS, MO 63123
p: 314.578.4953
e: edin@coralicarchitecture.com

STRUCTURAL ENGINEER
JAMES C. KREHER
JIM KREHER
208 N. MAIN STREET,
COLUMBIA, IL 62236
p: 618.281.8505
jimk@kreherengineering.com

MEP ENGINEER
Case Engineering
DARRELL R. CASE
796 MERUS CT.,
FENTON, MO 63026
T. 636.349.1600 F. 636.349.1730
dcase@caseengineeringinc.com

JAMES C. KREHER
STRUCTURAL ENGINEER
PE-25562 Ex. 12-31-2021

STATE OF MISSOURI
JAMES C. KREHER
NUMBER E-25562
REGISTERED PROFESSIONAL ENGINEER
10-11-21

MISSOURI CERTIFICATE OF AUTHORITY NO. 2004012212

Project No: MO0102
Dutch Bros Coffee - New Freestanding Store
500 NW Chipman Road, Lee's Summit, Missouri 64086
for: Dutch Bros Coffee
110 SW 4th St.
Grants Pass, OR 97526

ISSUED FOR PERMIT:
10.11.2021

REV:	DATE:	DESCRIPTION:

SHEET NAME:
ROOF FRAMING PLAN

SHEET NUMBER:
S2.3

© 2020 DB Franchising USA, LLC

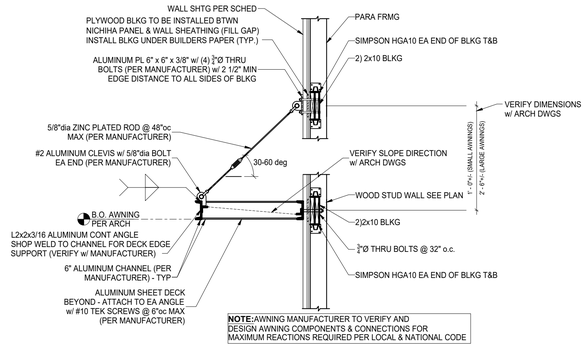

NOTE: AWNING MANUFACTURER TO VERIFY AND DESIGN AWNING COMPONENTS & CONNECTIONS FOR MAXIMUM REACTIONS REQUIRED PER LOCAL & NATIONAL CODE

C / S2.4 AWNING SUPPORT DETAIL
1/2" = 1'-0"

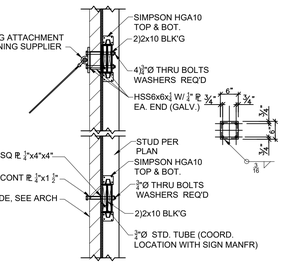

B / S2.4 AWNING SUPPORT DETAIL @ EFIS
1/2" = 1'-0"

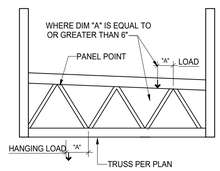

NOTE: CONTRACTOR TO COORDINATE ALL POINT LOAD LOCATIONS WITH TRUSS MFR. TRUSS MFR TO PROVIDE DETAIL OF CONNECTOR TO TRUSS.

TYPICAL TRUSS STRUT DETAIL

D / S2.4 TRUSS STRUT DETAIL
1/2" = 1'-0"

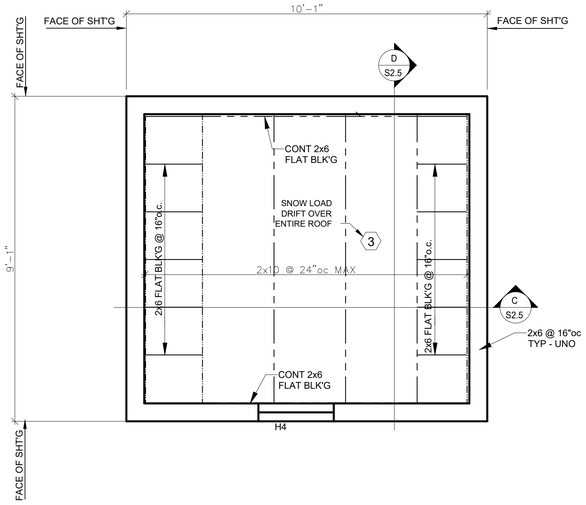

A / S2.4 HIGH ROOF FRAMING PLAN
1/2" = 1'-0"

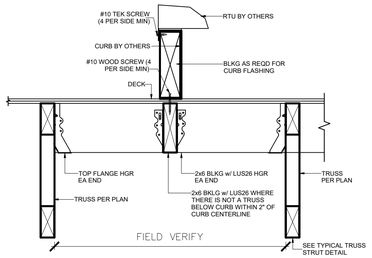

E / S2.4 RTU CURB TRUSS
1/2" = 1'-0"

SNOW LOAD DRIFT

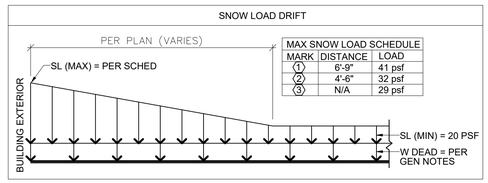

MAX SNOW LOAD SCHEDULE		
MARK	DISTANCE	LOAD
1	6'-9"	41 psf
2	4'-6"	32 psf
3	N/A	29 psf

COMPONENT & CLADDING ROOF WIND PRESSURES ASCE (7-16)

ROOF PRESSURES (PSF)		
ZONE	DOWN WARD	UPLIFT
1	+16 psf	-43 psf
2	+25 psf	-57 psf
3	+25 psf	-57 psf
4	+17 psf	-47 psf
5	+27 psf	-62 psf
6	+27 psf	-62 psf
7	+25 psf	-54 psf
8	+25 psf	-76 psf
ALL LOADS ARE LRFD		

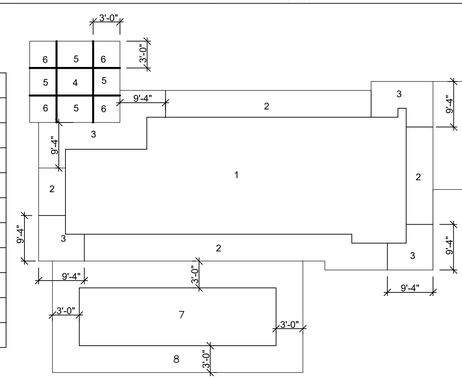

THE PROFESSIONAL ENGINEERS SEAL AFFIXED TO THIS SHEET INDICATES THAT THE NAMED ENGINEER HAS PREPARED OR DIRECTED THE PREPARATION OF, AND TAKES RESPONSIBILITY FOR, THE STRUCTURAL DRAWING AND DOCUMENTS, NOT EXHIBITING THIS SEAL, SHALL NOT BE CONSIDERED PREPARED BY OR THE RESPONSIBILITY OF THE LICENSED USE OF THE PROFESSIONAL ENGINEER UNDER HIS/HER SEAL, OR PROVIDED VIA THIS COMPANY, COMPLETENESS NO STATUS
JOB NO. X21-0022

COPYRIGHT (C) 2021 VIEWER ENGINEERING, INC. REPRODUCTION OF THIS DRAWING FOR SHOP DRAWINGS IS PROHIBITED. BUT THE ARCHITECT OR ENGINEER SHALL REMOVE ALL SEALS, FIRM NAMES, THE LEC SHEET NUMBER AND SHALL ASSUME FULL RESPONSIBILITY FOR THE ENTIRE DOCUMENT.

DUTCH BROS COFFEE

CORALIC ARCHITECTURE

ARCHITECT
CORALIC, LLC
EDIN CORALIC
9700 MACKENZIE ROAD, STE. 222
ST. LOUIS, MO 63123
p: 314.578.4953
e: edin@coralicarchitecture.com

STRUCTURAL ENGINEER
JAMES C. KREHER
JIM KREHER
208 N. MAIN STREET,
COLUMBIA, IL 62236
p: 618.281.8505
jimk@kreherengineering.com

MEP ENGINEER
Case Engineering
DARRELL R. CASE
796 MERUS CT.,
FENTON, MO 63026
T. 636.349.1600 F. 636.349.1730
dcase@caseengineeringinc.com

JAMES C. KREHER
STRUCTURAL ENGINEER
PE-25562 Ex. 12-31-2021

STATE OF MISSOURI
JAMES C. KREHER
NUMBER E-25562
REGISTERED PROFESSIONAL ENGINEER
10-11-21

MISSOURI CERTIFICATE OF AUTHORITY NO. 2004012212

Project No: MO0102

Dutch Bros Coffee - New Freestanding Store

500 NW Chipman Road. Lee's Summit, Missouri 64086
for: Dutch Bros Coffee
110 SW 4th St.
Grants Pass, OR 97526

ISSUED FOR PERMIT:
10.11.2021

REV:	DATE:	DESCRIPTION:

SHEET NAME:

HIGH ROOF PLAN AND DETAILS

SHEET NUMBER:

S2.4

© 2020 DB Franchising USA, LLC

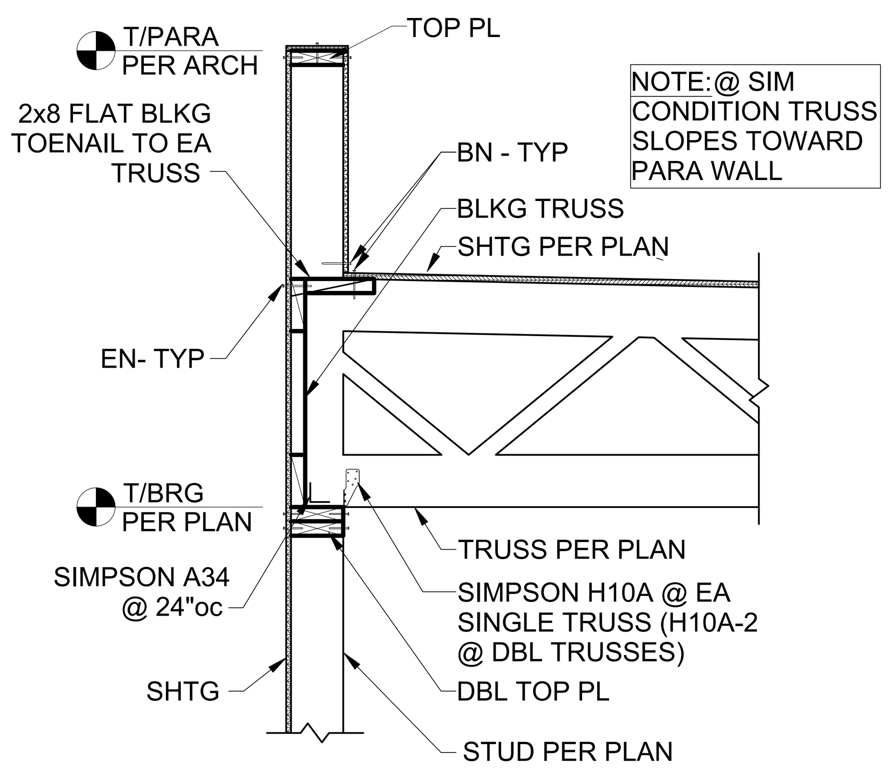

A FRAMING SECTION
S2.5 3/4" = 1'-0"

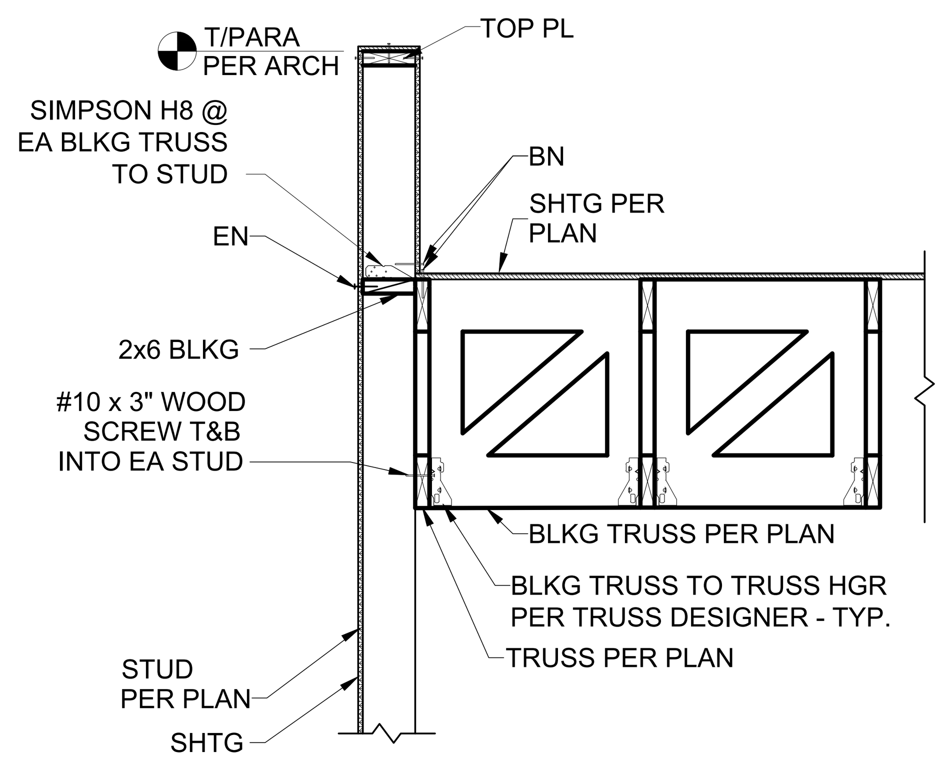

B FRAMING SECTION
S2.5 3/4" = 1'-0"

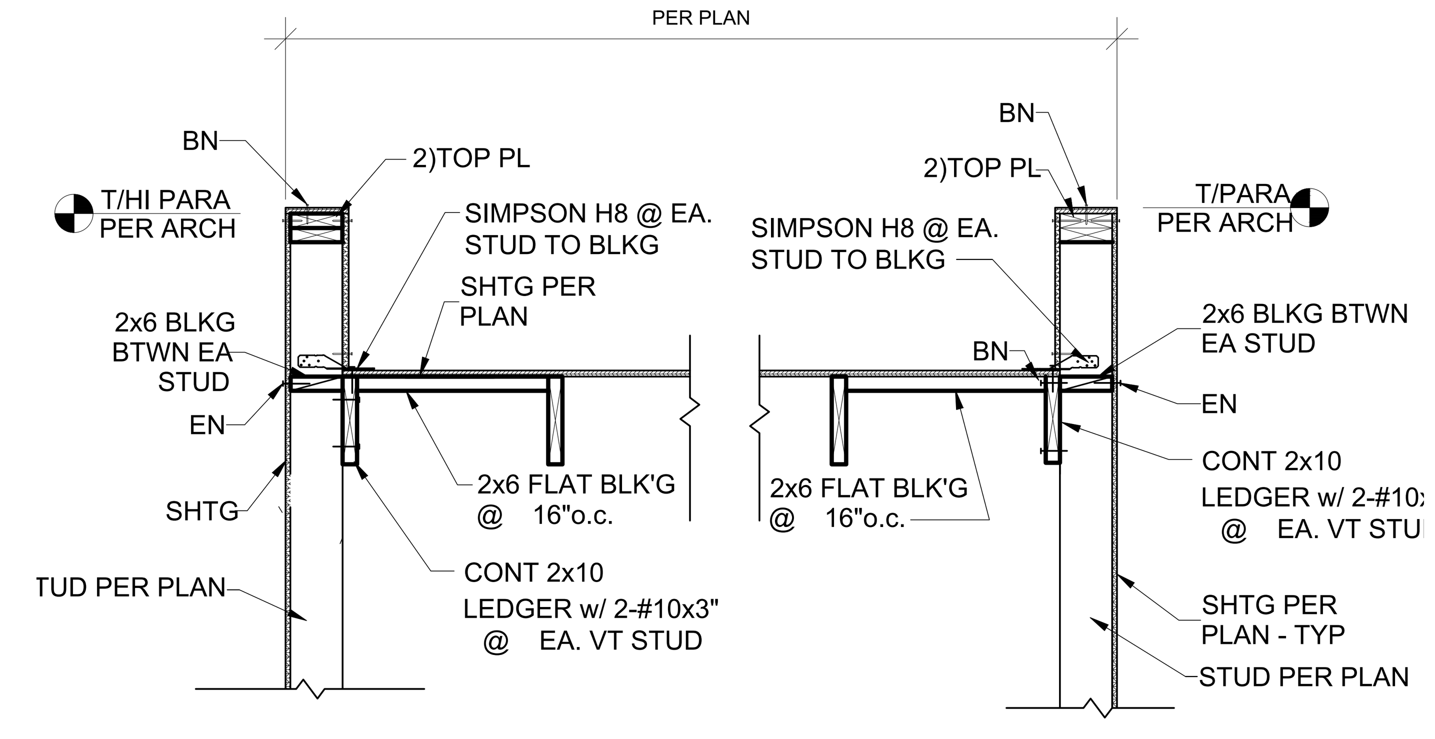

C FRAMING SECTION
S2.5 3/4" = 1'-0"

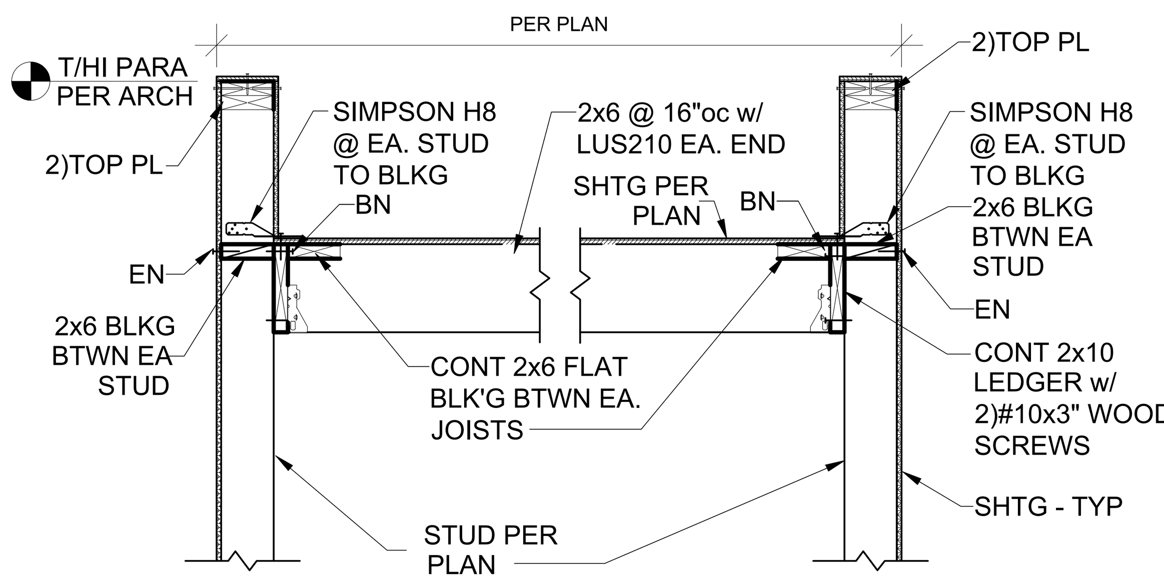

D FRAMING SECTION
S2.5 3/4" = 1'-0"

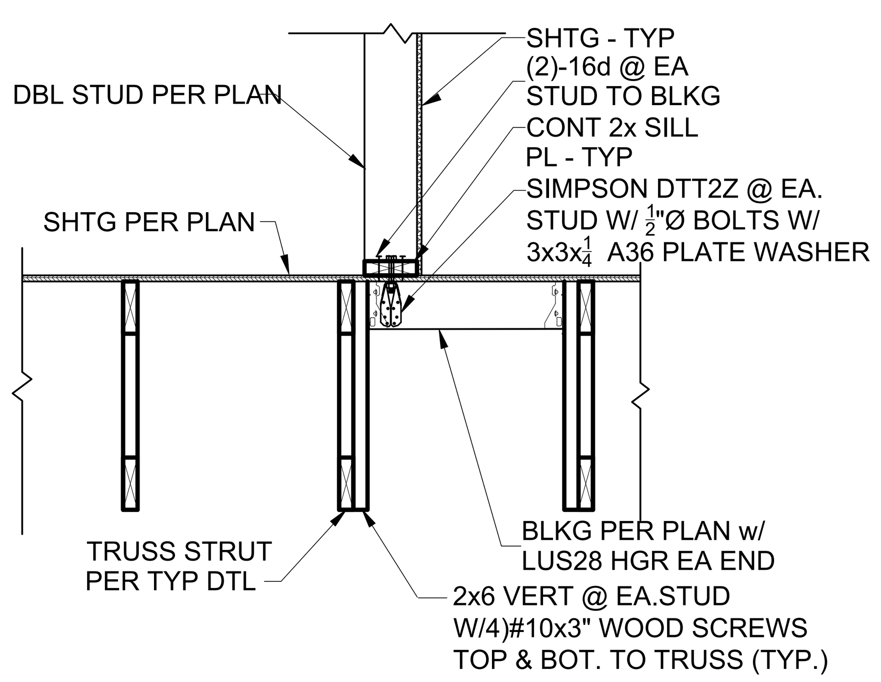

E FRAMING SECTION
S2.5 3/4" = 1'-0"

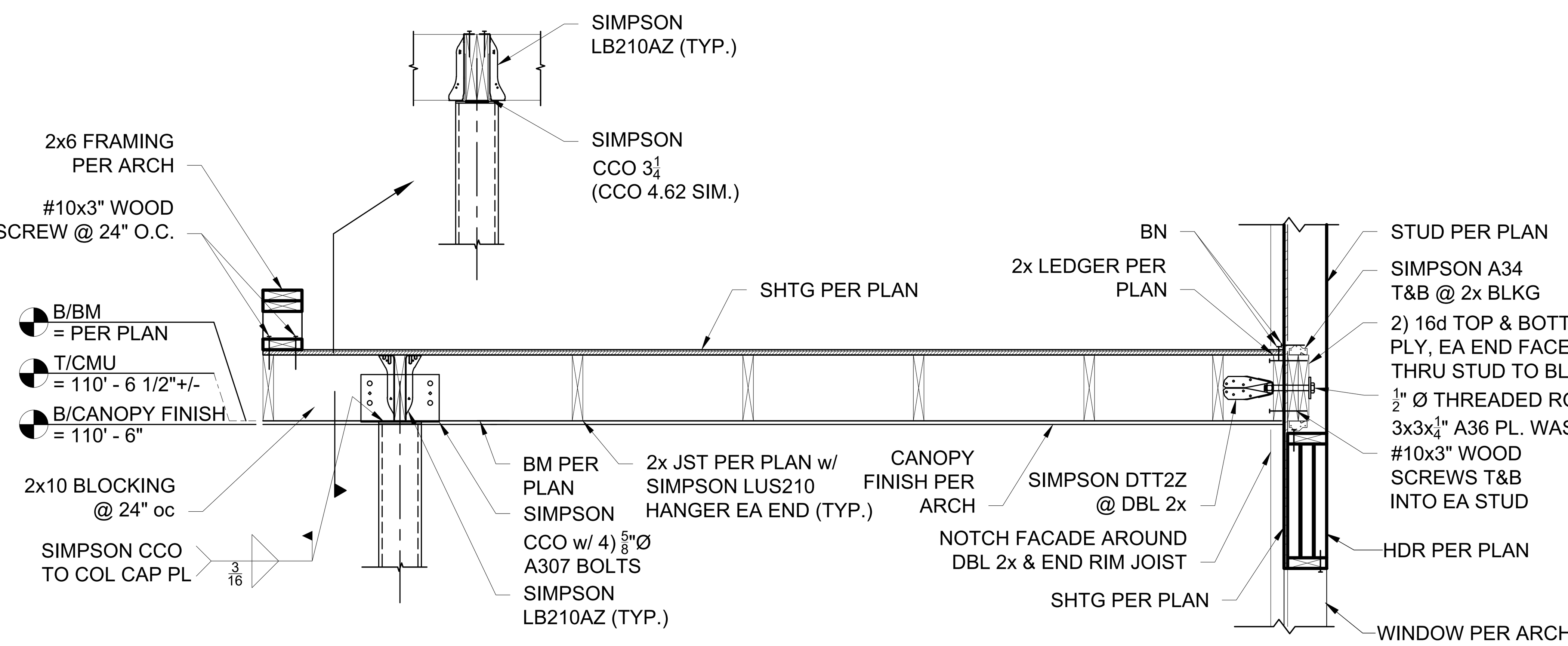

F FRAMING SECTION
S2.5 3/4" = 1'-0"

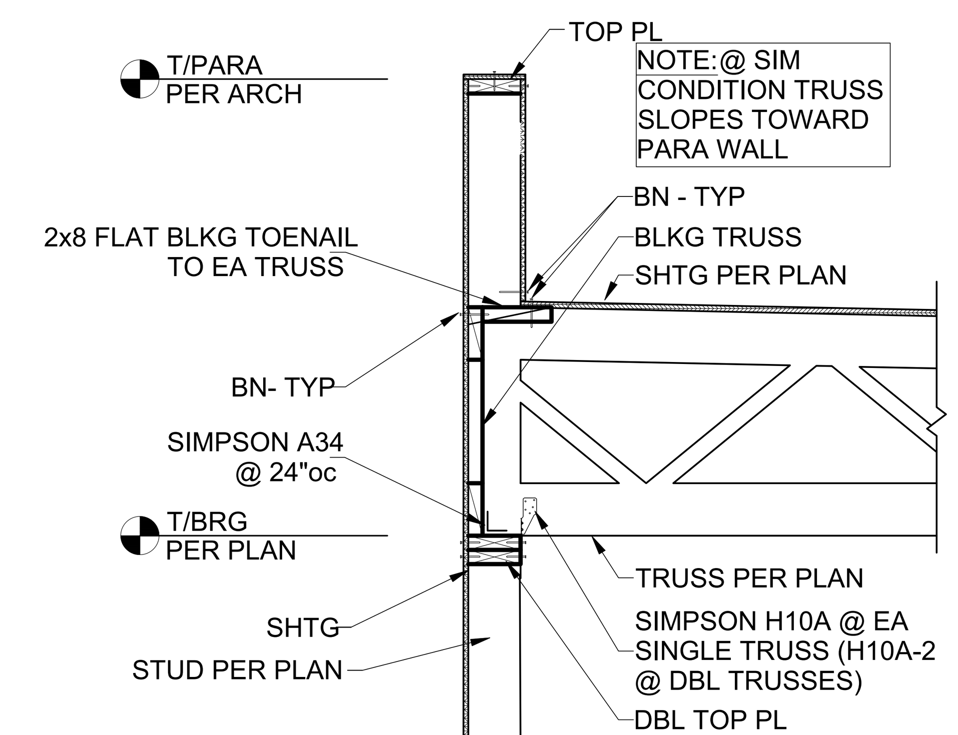

G FRAMING SECTION
S2.5 3/4" = 1'-0"

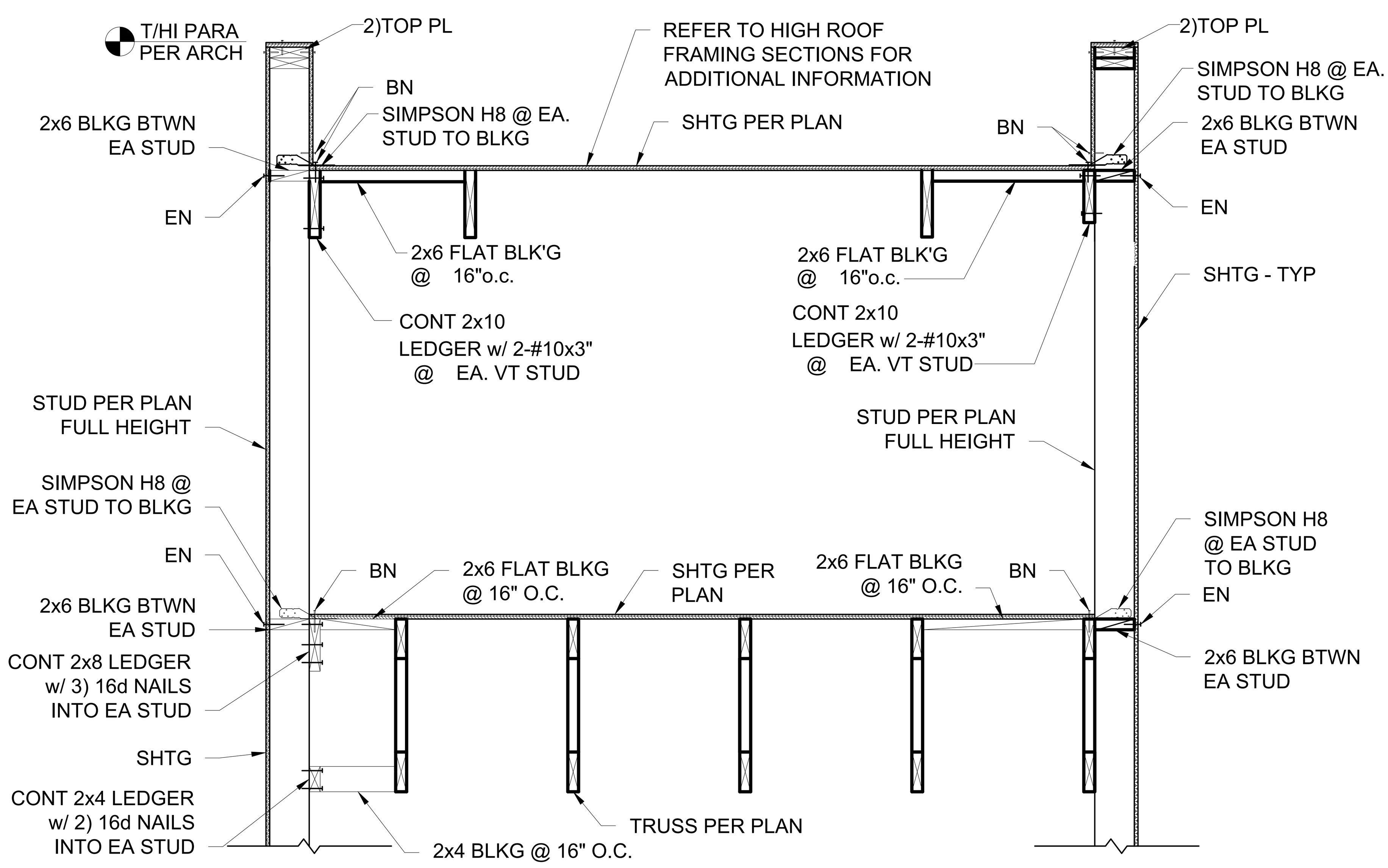

H FRAMING SECTION
S2.5 3/4" = 1'-0"

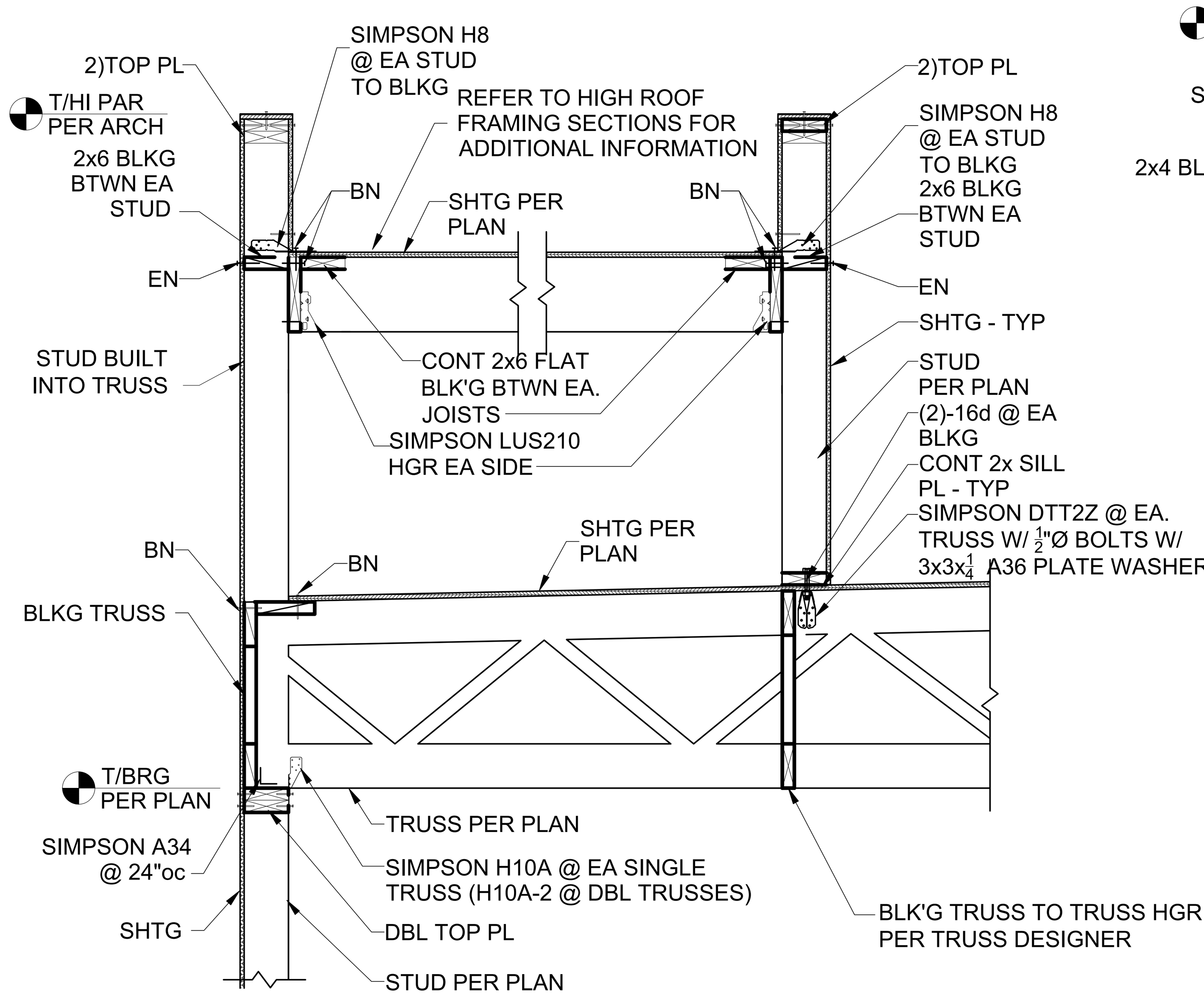

J FRAMING SECTION
S2.5 3/4" = 1'-0"

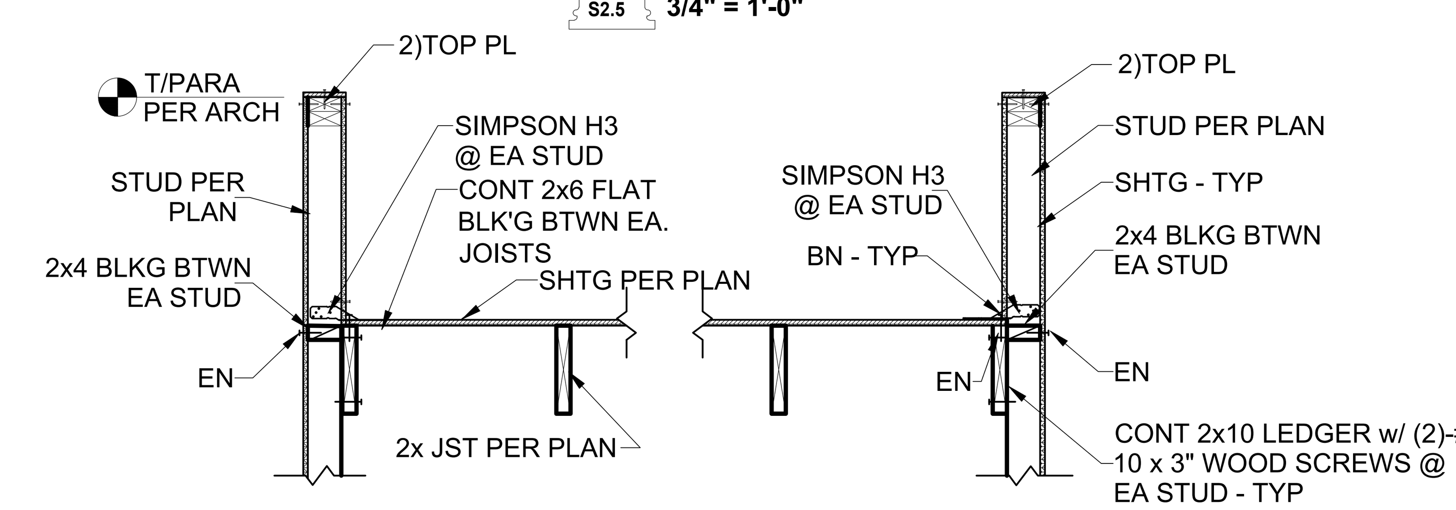

K FRAMING SECTION
S2.5 3/4" = 1'-0"

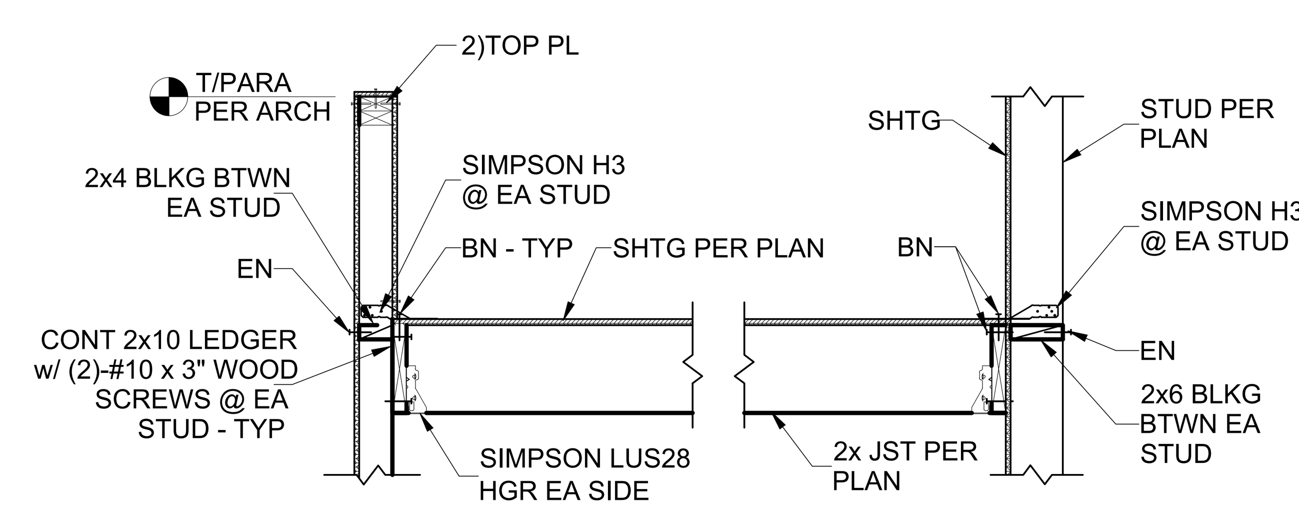

L FRAMING SECTION
S2.5 3/4" = 1'-0"

THE PROFESSIONAL ENGINEERS SEAL AFFIXED TO THIS SHEET INDICATES THAT THE NAMED ENGINEER HAS PREPARED OR DIRECTED THE PREPARATION OF THE MATERIAL SHOWN ONLY ON THIS SHEET. OTHER DRAWINGS AND DOCUMENTS, NOT EXHIBITING THIS SEAL, SHALL NOT BE CONSIDERED PREPARED BY OR THE RESPONSIBILITY OF THE UNDERSIGNED. USE OF THE DRAWINGS WITHOUT THE PROFESSIONAL ENGINEERS SEAL IS PROHIBITED.
JOB NO. K21-002J

COPYRIGHT (C) 2021 KREHER ENGINEERING, INC. REPRODUCTION OF THIS DRAWING FOR SHOP DRAWINGS IS PERMITTED, BUT AT THE USERS RISK. THE USER SHALL REMOVE ALL SEALS, FIRM NAMES, TITLES, SHEET NUMBERS AND SHALL ASSUME FULL RESPONSIBILITY FOR THEIR ACCURACY, COMPLETENESS AND STATUS.

DUTCH BROS Coffee

CORALIC ARCHITECTURE

ARCHITECT
CORALIC, LLC
EDIN CORALIC
9700 MACKENZIE ROAD, STE. 222
ST. LOUIS, MO 63123
p: 314.578.4953
e: edin@coralicarchitecture.com

STRUCTURAL ENGINEER
JAMES C. KREHER
JIM KREHER
208 N. MAIN STREET,
COLUMBIA, IL 62236
p: 618.281.8505
jimk@kreherengineering.com

MEP ENGINEER
Case Engineering
DARRELL R. CASE
796 MERUS CT.,
FENTON, MO 63026
T. 636.349.1600 F. 636.349.1730
dcase@caseengineeringinc.com

JAMES C. KREHER
STRUCTURAL ENGINEER
PE-25562 Ex. 12-31-2021

STATE OF MISSOURI
JAMES C. KREHER
NUMBER E-25562
REGISTERED PROFESSIONAL ENGINEER
10-11-21

MISSOURI CERTIFICATE OF AUTHORITY NO. 2004012212

Project No: MO0102
Dutch Bros Coffee - New Freestanding Store
500 NW Chipman Road, Lee's Summit, Missouri 64086
for: Dutch Bros Coffee
110 SW 4th St.
Grants Pass, OR 97526

ISSUED FOR PERMIT:
10.11.2021

REV:	DATE:	DESCRIPTION:

SHEET NAME:
ROOF SECTIONS

SHEET NUMBER:
S2.5

© 2020 DB Franchising USA, LLC

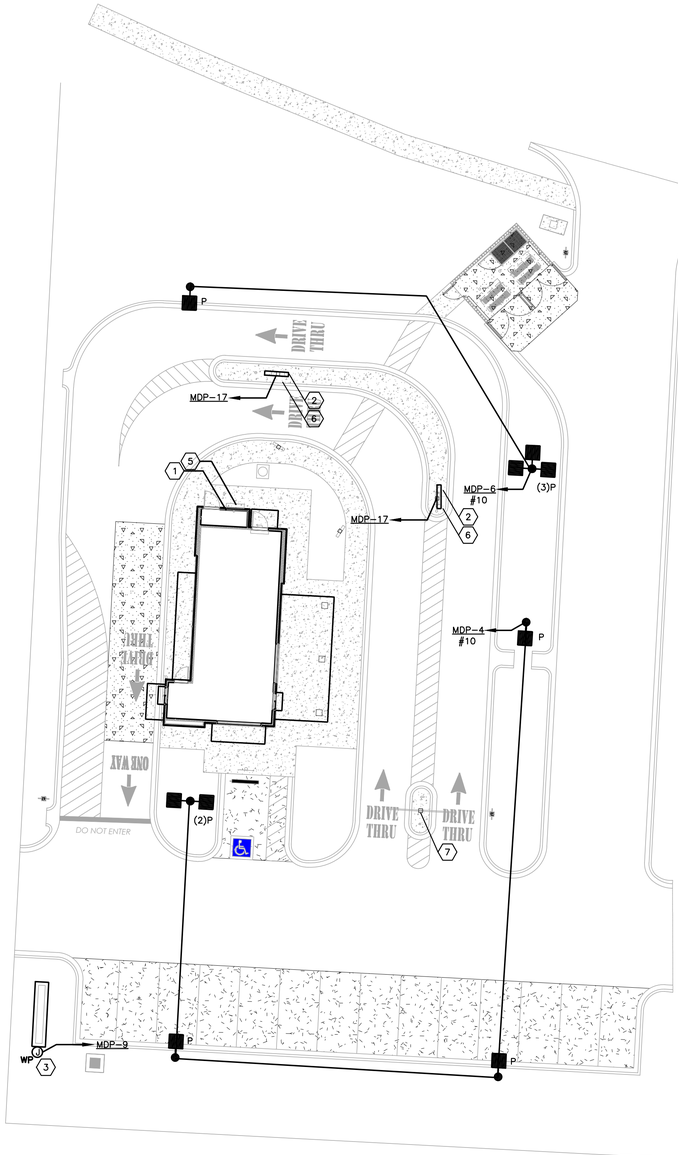

PLAN NORTH

1 **ELECTRICAL SITE PLAN**

1/16" = 1'-0"

0 8' 16' 32'

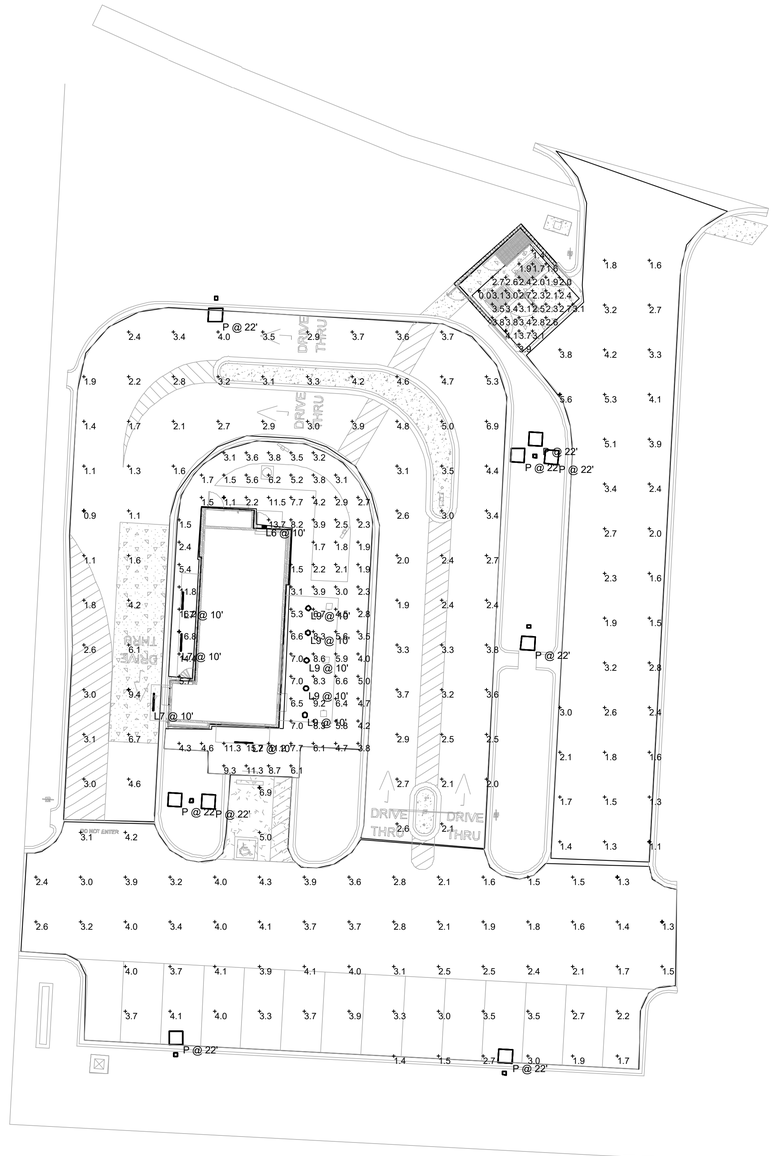

PLAN NORTH

2 **SITE PHOTOMETRIC PLAN**

1/16" = 1'-0"

0 8' 16' 32'

KEYED NOTES

1. LOCATION OF UTILITY METER DISCONNET SWITCH AND CT CABINET. REFER TO "RISER DIAGRAM" ON SHEET E3.01.
2. PROVIDE 120V ELECTRICAL CONNECTION WITH (2)#8 & (1)#8G. IN 2" PVC ROUTED BELOW GRADE FOR DRIVE-THRU BACKLIT MENU BOARD PER MANUFACTURER'S INSTRUCTIONS. CONDUIT SHALL COME UP IN CENTER OF POST. SIGN COMPANY REPRESENTATIVE TO GIVE EXACT LOCATIONS/DIMENSIONS FOR GC TO MATCH. CONTRACTOR SHALL REPAIR EXISTING PARKING SURFACES FROM TRENCHING TO MATCH PREVIOUS CONDITIONS.
3. PROVIDE 120V ELECTRICAL CONNECTION WITH (2)#8 & (1)#8G. IN 2" PVC ROUTED BELOW GRADE FOR NEW MONUMENT SIGN PER REPRESENTATIVE PRIOR TO ROUGH-IN. CONTRACTOR SHALL REPAIR EXISTING PARKING SURFACES FROM TRENCHING TO MATCH PREVIOUS CONDITIONS.
4. NOT USED.
5. LOCATION OF CABLE INTERNET DEMARC
6. PROVIDE 2" CONDUIT W/ PULL STRING 24" BEHIND MENU BOARD TO CHRISTY BOX FOR FUTURE DIGITAL MENU BOARD UPGRADE . COORDINATE W/ SIGN MANUFACTURER.
7. PROVIDE 2" CONDUIT W/ PULL STRING TO CHRISTY BOX BETWEEN "CHOOSE LANE" DIRECTIONAL SIGNAGE AND CLEARANCE BAR FOR FUTURE DRIVE THRU SENSORS.

MIN. DUTCH BROS REQUIREMENTS:

-5FTC AT BUILDING
-3FTC AT SITE/PARKING
-3FTC AT TRASH ENCLOSURE

SEE S1.4 FOR POLE BASE DETAIL

GENERAL NOTES

1. FOR UTILITY TRANSFORMER, TELEPHONE SERVICE, GAS, WATER, AND SANITARY SEWER LOCATIONS; SEE CIVIL SITE PLAN.
2. THE ELECTRICAL CONTRACTOR IS RESPONSIBLE FOR COORDINATION AND COMPLIANCE WITH ALL UTILITY COMPANIES REQUIREMENTS. INCOMING POWER AND TELEPHONE SERVICES IS EXISTING TO REMAIN. VERIFY REQUIREMENTS WITH UTILITIES PRIOR TO INSTALLATION.

SITE NOTES

WATER LINES, CONDUITS FOR ELECTRICAL, OR OTHER UTILITIES SHALL BE LOCATED SO AS TO NOT CONFLICT WITH REQUIRED TREE LOCATIONS FOR STREETS AND PARKING LOTS.

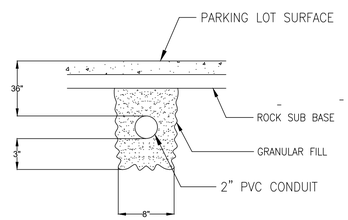

3 / E100 **TRENCHING DETAIL**

SCALE: N.T.S.

Statistics

Description	Symbol	Avg	Max	Min	Max/Min	Avg/Min
Building	+	5.7 fc	16.8 fc	1.1 fc	15.3:1	5.2:1
Drive Thru	+	3.2 fc	9.4 fc	0.9 fc	10.4:1	3.6:1
Drive Way	+	2.7 fc	5.6 fc	1.1 fc	5.1:1	2.5:1
Parking	+	3.0 fc	6.9 fc	1.3 fc	5.3:1	2.3:1
Trash	+	2.7 fc	4.1 fc	0.0 fc	N/A	N/A

Schedule

Symbol	Label	Quantity	Manufacturer	Catalog Number	Description	Number Lamps	Lumens Per Lamp	Light Loss Factor	Wattage
	L6	1	RAB LIGHTING INC.	WPLED26-WPLED26/D10 (WALLPACK) - ALED26-ALED26/D10 (AREA LIGHTER)	CAST FINNED METAL HOUSING, MACHINED METAL HEAT SINK, 1 CIRCUIT BOARD WITH 1 LED, MOLDED PLASTIC REFLECTOR WITH SEMI-SPECULAR FINISH, CLEAR FLAT GLASS LENS IN CAST BROWN PAINTED METAL FRAME.	1	3474	0.92	30
	L7	4	Self	WPLED26-WPLED26/D10 (WALLPACK) - ALED26-ALED26/D10 (AREA LIGHTER)	CROWN-L90-277V 830_BA110	1	4200	0.92	40
	L9	5	DMF LIGHTING	DRD5S-4R-10930	DRD5S-4R-10930	1	1015	0.92	11.8
	P	9	NLS Lighting	NV-1-T4-48L-1-40K-UNV-HSS	T4 OPTICS WITH BLACK HSS	1	9674	0.92	156

DUTCH BROS

CORALIC ARCHITECTURE

ARCHITECT
CORALIC, LLC
EDIN CORALIC
9700 MACKENZIE ROAD, STE 222
ST. LOUIS, MO 63123
p: 314.578.4953
edin@coralicarchitecture.com

STRUCTURAL ENGINEER
JAMES C. KREHER
JIM KREHER
208 N. MAIN STREET,
COLUMBIA, IL 62236
p: 618.281.8505
jimk@kreherengineering.com

MEP ENGINEER
Case Engineering
DARRELL R. CASE
796 MERUS CT.,
FENTON, MO 63026
T. 636.349.1600 F. 636.349.1730
dcase@caseengineeringinc.com

10.11.2021

STATE OF MISSOURI
DARRELL R. CASE
NUMBER PE-23303
PROFESSIONAL ENGINEER

Project No: MO0102

Dutch Bros Coffee - New Freestanding Store

500 NW Chipman Road, Lee's Summit, Missouri 64086
for: Dutch Bros Coffee
110 SW 4th St.
Grants Pass, OR 97526

ISSUED FOR PERMIT:
10.11.2021

REV:	DATE:	DESCRIPTION:

SHEET NAME:

ELECTRICAL
SITE & PHOTOMETRIC
PLAN

SHEET NUMBER:

E0.01

© 2020 DB Franchising USA, LLC

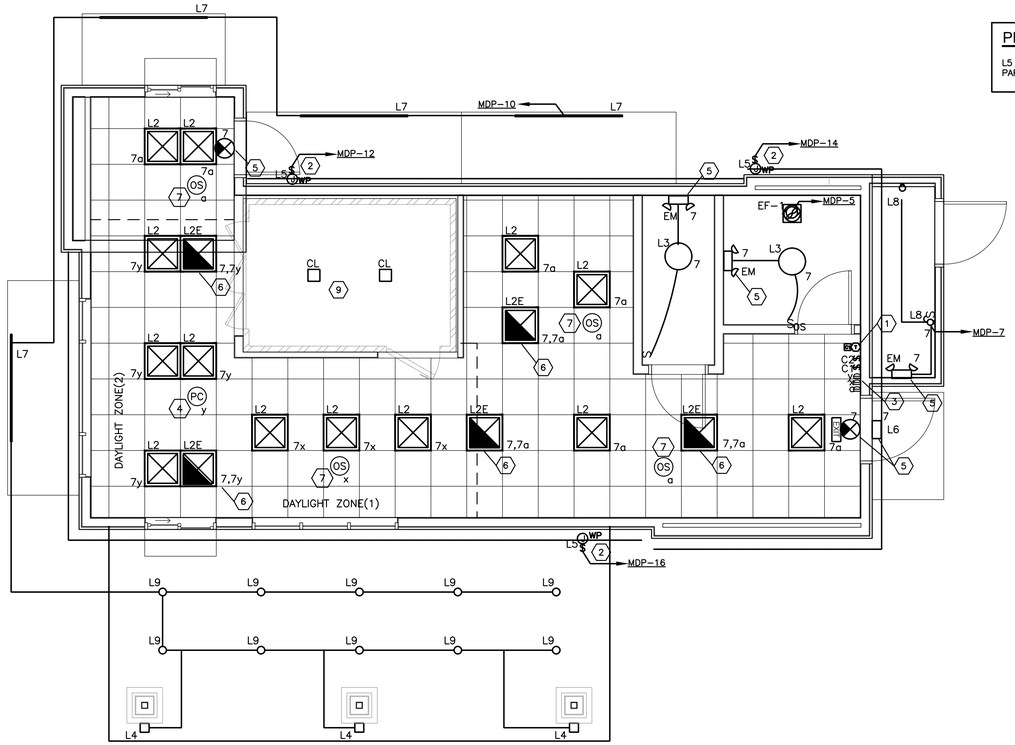

PLAN NORTH

1 **ELECTRICAL LIGHTING PLAN**

1/4" = 1'-0"

0 2' 4' 8'

PERIMETER LIGHT NOTE:

L5 – LED STRIP LIGHTING AT PERIMETER OF PARAPET 2, APPROX 118FT. RUN

KEYED NOTES

1. LIGHTING CONTACTORS AND TIMECLOCK OVERRIDE SWITCH. REFER TO "LIGHTING CONTROL DIAGRAM" ON THIS SHEET. COORDINATE LOCATION WITH OWNER'S REPRESENTATIVE PRIOR TO ROUGHIN.
2. POWER FOR PARAPET LIGHTING DRIVER. EC TO COORDINATE WITH LEKTRON FOR TRANSFORMER LOCATIONS.
3. LIGHTING CONTROL SWITCHBANK. LOCATION BY BACK DOOR.
4. PROVIDE "SENSOR SWITCH" CM ADC AUTOMATIC DAYLIGHTING PHOTOCELL AND PP-15 POWER PACK. SEE DETAIL #3 THIS SHEET.
5. EC TO CONNECT EMERGENCY BATTERY DRIVER, EXIT SIGNS, AND NL TO UNSWITCHED LEG OF LOCAL CIRCUIT INDICATED.
6. EC TO CONNECT FIXTURE LED DRIVER TO SWITCHED LEG OF CIRCUIT AND EMERGENCY BATTERY DRIVER TO UNSWITCHED LEG OF CIRCUIT. EMERGENCY BATTERY DRIVER ARE SHIPPED SEPARATELY AND ARE TO BE FIELD INSTALLED AND CONNECTED BY EC.
7. EC TO PROVIDE AQUITY BRANDS LOW VOLTAGE DUAL TECHNOLOGY CEILING MOUNTED OCCUPANCY SENSOR SWITCH CM-PDT9 & PP-15 POWER PACK. SENSOR SHALL ENERGIZE SWITCH FOR LOCAL CONTROL WHERE REQUIRED.
8. EC TO PROVIDE EXTERIOR OCCUPANCY SENSOR LISTED FOR OUTDOOR USE. COMPATIBLE WITH CANOPY LUMINARIES FOR AUTOMATIC DIMMING CONTROLS PER C130.2(c)3. SENSOR SHALL BE CAPABLE OF AUTOMATICALLY REDUCING LIGHTING BY 40% WHEN AREA IS UNOCCUPIED AND NO MORE THAN 90% WHEN OCCUPIED.
9. SEE KEYED NOTE #5 ON SHEET E2.01 FOR WALK-IN COOLER LIGHTING REQUIREMENTS.

ELECTRICAL SYMBOLS

SYMBOL	DESCRIPTION
A-1	HOME RUN TO PANEL. CIRCUIT NUMBERS, PHASE, NEUTRAL AND GROUND CONDUCTORS INDICATED ALONG WITH ISOLATED GROUND CONDUCTOR IF APPLICABLE
A-1	PARTIAL CIRCUIT
$	SINGLE POLE SWITCH, +3'-10" OR AS NOTED
$2	DOUBLE POLE, SINGLE THROW SWITCH, +3'-10" OR AS NOTED
$3	THREE-WAY SWITCH, +3'-10" OR AS NOTED
D	DIMMER, +3'-10" OR AS NOTED
$OS	WALL MOUNTED OCCUPANCY SENSOR, +3'-10" OR AS NOTED
$RO	WALL MOUNTED OCCUPANCY SENSOR, +3'-10" OR AS NOTED, CONTROLLED BY ROOM CONTROLLER
OS	CEILING MOUNTED OCCUPANCY SENSOR
RO	CEILING MOUNTED OCCUPANCY SENSOR, CONTROLLED BY ROOM CONTROLLER
PS	CEILING MOUNTED INTERIOR DAYLIGHT HARVESTING PHOTOCELL SENSOR CONTROLLED BY ROOM CONTROLLER
PP	POWER PACK, INSTALLED ABOVE ACCESSIBLE CEILING
	DUPLEX RECEPTACLE, +18" OR AS NOTED
	GFI DUPLEX RECEPTACLE +18" OR AS NOTED
	QUADPLEX RECEPTACLE, +18" OR AS NOTED
	GFI QUADPLEX RECEPTACLE, +18" OR AS NOTED
GFCI	GROUND FAULT INTERRUPTING RECEPTACLE, +18" OR AS NOTED
GFCI WP	WEATHERPROOF GROUND FAULT INTERRUPTING RECEPTACLE, +18" OR AS NOTED
	SPECIAL RECEPTACLE, NEMA STYLE AS NOTED, +18" OR AS NOTED
USB	USB CHARGING DUPLEX RECEPTACLE, +18" OR AS NOTED
CLG	RECEPTACLE INSTALLED FLUSH IN CEILING
SIGN	SWITCHED RECEPTACLE FOR INTERIOR SIGNAGE, +100" OR AS NOTED, LABEL RECEPTACLE ACCORDINGLY
PTY	SWITCHED RECEPTACLE FOR PARTY LIGHTS, +100" OR AS NOTED, LABEL RECEPTACLE ACCORDINGLY
J	JUNCTION BOX
	DISCONNECT SWITCH, TOP AT +6'-0" OR AS NOTED
	DISCONNECT SWITCH PROVIDE WITH EQUIPMENT
C	LIGHTING CONTACTOR, INSTALLED AS NOTED
T	TIME CLOCK, +6'-2" OR AS NOTED
P	EXTERIOR PHOTOCELL, INSTALLED ON ROOF FACING NORTH
RMC	ROOM CONTROLLER
PLC	PLUG LOAD CONTROLLER
EOD	ELECTRICALLY OPERATED DAMPER, PROVIDED BY MECHANICAL CONTRACTOR, WIRE BY ELECTRICAL CONTRACTOR
T S C H	THERMOSTAT, TEMPERATURE SENSOR, CARBON DIOXIDE SENSOR AND HUMIDISTAT PROVIDED BY MECHANICAL CONTRACTOR, +3'-10" OR AS NOTED
	PUSHBUTTON, TOP AT +4'-6" OR AS NOTED
CH	DOOR BELL CHIME, +8'-0" OR AS NOTED
	TELEPHONE/DATA OUTLET, +18" WITH 1" CONDUIT TO ABOVE CEILING
	DATA OUTLET, +18" WITH 3/4" CONDUIT TO ABOVE CEILING
+48"	MOUNTING HEIGHT ABOVE FINISHED FLOOR TO CENTERLINE OF DEVICE
TYP.	TYPICAL
FACP	FIRE ALARM CONTROL PANEL, FLUSH MOUNTED, TOP AT +6'-0"
F	MANUAL FIRE ALARM PULL STATION, +3'-10" PER ADA
F	FIRE ALARM HORN/STROBE, +80" TO BOTTOM OF DEVICE PER ADA
	EXTERIOR WEATHERPROOF FIRE ALARM HORN, +10'-0" AFG
F	STROBE ONLY, +80" TO BOTTOM OF DEVICE PER ADA
F	FIRE ALARM HORN/STROBE, CEILING MOUNTED
F	STROBE ONLY, CEILING MOUNTED
SD	AREA TYPE PHOTOELECTRIC SMOKE DETECTOR WITH SAMPLING TUBES AND REMOTE INDICATOR LIGHT MOUNTED FLUSH IN CEILING BELOW DETECTOR

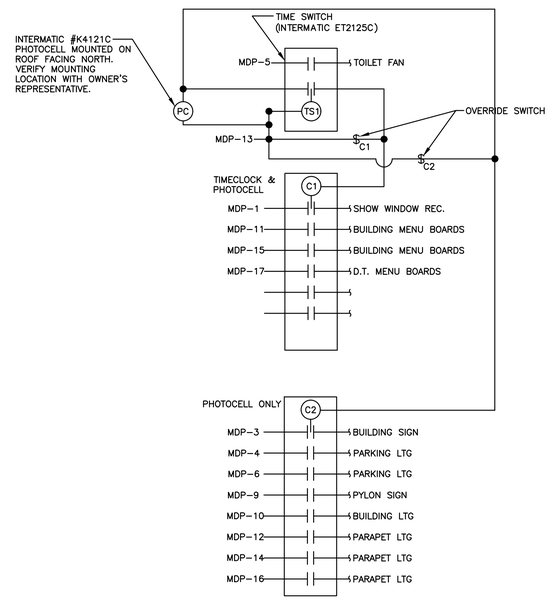

CONTACTOR 'C1' TO BE PHOTOCELL ON AND TIMECLOCK OFF
CONTACTOR 'C2' TO BE PHOTOCELL ON AND OFF

2 E1.01 **LIGHTING CONTROL DIAGRAM**

SCALE: N.T.S.

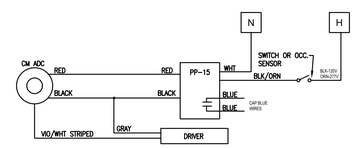

3 E1.01 **DAYLIGHT ZONE WIRING DIAGRAM**

SCALE: N.T.S.

LIGHTING FIXTURE SCHEDULE

ID	MANUFACTURER	MODEL #	LAMPS	VOLTAGE	WATTAGE	REMARKS
L2	EIKO	SLM22-4CB-40K-U/09764 MV, 0-10V DIM	LED	120/277	30W	2x2 FLAT PANEL, LAYIN GRID CEILING, FROSTED LENS, LED 30W, 3750LM, 4000K, 0-10V DIM
L2E	EIKO	SLM22-4CB-40K-U/09764 MV, 0-10V DIM	LED	120/277	30W	2x2 FLAT PANEL, LAYIN GRID CEILING, FROSTED LENS, LED 30W, 3750LM, 4000K, 0-10V DIM, EMERGENCY BATTERY PACK
L3	NUVO	26W/LED/15/RND/FLUSH/3K/WH-62-1191SP MV, 120V ELV DIM	LED	120/277	26W	16" DIA SURFACE J-BOX MOUNTED LED MILK-WHITE DIFFUSER, ROUND WHITE TRIM, 26W, 2000LM, 3000K ELV DIM
L4	TECH LIGHTING	700 OWVEX-9-3000K-4-H-UNV 120V NON-DIM	LED	120/277	19W	EXTERIOR LIGHT SCONCE, 5" SQUARE, 19W 600LM, 3000K, WET LOCATION, ADJUSTABLE UP/DOWN BEAM COLOR CHARCOAL
L5	LEKTRON	RIGID LED LASER/LEON LED SIMULATED NEON	LED	120/277	100W	RIGID SYSTEM BASED ON PHILIPS ADVANCED 100W, 24V OUTPUT LED DRIVER – LEDINTA0024V41FO APPROX 118FT PER STORE, 24V, 1.5W/FT, LOCATED INSIDE OF BUILDING, ACCESSIBLE LOCATION. USE USE TRANSFORMER SIZES PER RUNS/WIRING GROUPS –DEFAULT 180W. COORDINATE WITH SIGN COMPANY. SEE CONTACTS ON COVER SHEET.
L6	RAB	WPLED-26-Y/ESP MV, NON-DIM	LED	120/277	40W	EXTERIOR DECORATIVE WALLPACK, APPROX 40W, 5000LM, 3000K, W/EMERGENCY BACK UP, NO MOTION SENSOR OR PHOTOCELL
L7	SELF	CROWN-70-40K-110-S-SSP	LED	120/277	60W	6' WET LOCATION LINKABLE BATTEN STRIP, LED, HIGH-OUPUT, 60W, 6300LM, 4000K, INTEGRAL DRIVER
L8	NUVO	65-226 (CEILING MOUNT)	LED	120/277	13W	CEILING MOUNTED VAPOR PROOF FIXTURE, WITH GUARD, WILVER, LED, 13W, 850LM, 500K, WET LOCATION LISTED, FOR ELECTRICAL OR MECHANICAL ROOM.
L9	DMF LTG	DRD5S-4-R	LED	120/277	12W	4" ROUND CANOPY DOWNLIGHT
P	IMPERIAL LTG	NV-1-T4-48L-1-40K-UNV-HSS WITH FSP-211 MOTION SENSOR & HOUSE SIDE SHEILD	LED	120/277	156W	SITE POLE HEAD, LED 156W, 9674LM, 4000K, DARK BRONZE, TYPE II DISTRIBUTION, WITH 17'POLE. VERIFY PER LOCAL REQUIREMENTS PRIOR TO ORDERING – WATTS/LUMINS, KELVIN LIGHT TEMPERATURE, TYPE DIST, MOUNTING CONFIG. SINGLE OR DOUBLE, COLOR AND HEIGHT DRILL HOLES IN POLES FOR HEADS IF REQUIRED IN FIELD VERIFY COLOR/HEIGHT BEFORE ORDERING.
X	BEST	EZXTEU2RWEM MV,NON DIM, 4W	LED	120/277	30W	EXIT, SELF POWERED SINGLE/DOUBLE FACE, UNIVERSAL MOUNT, LED, RED ON WHITE, VERIFY COLORS
EM	LITHONIA	ELM2-LED-W	LED	120/277	1.8W	BUG EYE LED UNIT WITH WHITE FINISH.
CL	--	--	LED	120/277	--	COOLER LIGHT FIXTURE

A. INSTALLATION OF LIGHT FIXTURES SHALL BE ACCORDING TO MANUFACTURER'S RECOMMENDATIONS AND APPLICABLE CODE REQUIREMENTS.
B. VERIFY THE EXACT MOUNTING HEIGHT AND FINISH OF ALL LIGHTING FIXTURES WITH ARCHITECT PRIOR TO PLACING ORDER OR COMMENCING ROUGH-IN.
C. LIGHT FIXTURES SHALL BE PROVIDED BY THE ELECTRICAL CONTRACTOR.
D. ALL MEANS OF EGRESS LIGHTING AND EXIT SIGNS SHALL HAVE A MINIMUM OF 90 MINUTES BACKUP POWER.

LIGHTING GENERAL NOTES

A. CONNECT EXIT SIGNS, EMERGENCY AND NIGHT LIGHTS TO AN UNSWITCHED LIGHTING CIRCUIT, NOT CONTROLLED BY AN Y OCCUPANCY SENSORS, SWITCHES OR CONTACTORS.

B. PROVIDE A DEDICATED NEUTRAL WITH ALL DIMMING SYSTEM CIRCUITS, NO COMMON NEUTRALS SHALL BE ALLOWED.

C. REFER TO ARCHITECTURAL REFLECTED CEILING PLAN AND DETAILS FOR THE EXACT LOCATION OF ALL LIGHTING FIXTURES AND ANY OTHER EQUIPMENT INSTALLED IN THE CEILING SYSTEM. VERIFY EXACT MOUNTING HEIGHTS AND FINISHES WITH ARCHITECT PRIOR TO ROUGH-IN.

D. REFER TO THE POWER PLANS FOR LOCATIONS OF ELECTRICAL EQUIPMENT.

E. PROVIDE (2)ADDITIONAL #12 CONDUCTORS FOR ALL 0-10V DIMMING CIRCUITS.

F. 15" MIN TO BOTTOM OF ALL ROUGH-IN BOXES FOR USER CONTROLLED SWITCHES, OUTLETS ETC. AND 48" MAX TO TOP OF ROUGH-IN BOX.

G. 48" TO TOP OF ROUGH-IN BOX.

DUTCH BROS COFFEE

CORALIC ARCHITECTURE

ARCHITECT
CORALIC, LLC
EDIN CORALIC
9700 MACKENZIE ROAD, STE 222
ST. LOUIS, MO 63123
p: 314.578.4953
edin@coralicarchitecture.com

STRUCTURAL ENGINEER
JAMES C. KREHER
JIM KREHER
208 N. MAIN STREET,
COLUMBIA, IL 62236
p: 618.281.8505
jimk@kreherengineering.com

MEP ENGINEER
Case Engineering
DARRELL R. CASE
796 MERUS CT.,
FENTON, MO 63026
T. 636.349.1600 F. 636.349.1730
dcase@caseengineeringinc.com

10.11.2021

STATE OF MISSOURI — DARRELL R. CASE — NUMBER PE-23303 — PROFESSIONAL ENGINEER

Project No: MO0102

Dutch Bros Coffee - New Freestanding Store

500 NW Chipman Road, Lee's Summit, Missouri 64086
for: Dutch Bros Coffee
110 SW 4th St.
Grants Pass, OR 97526

ISSUED FOR PERMIT:
10.11.2021

REV:	DATE:	DESCRIPTION:

SHEET NAME:

LIGHTING PLAN

SHEET NUMBER:

E1.01

© 2020 DB Franchising USA, LLC

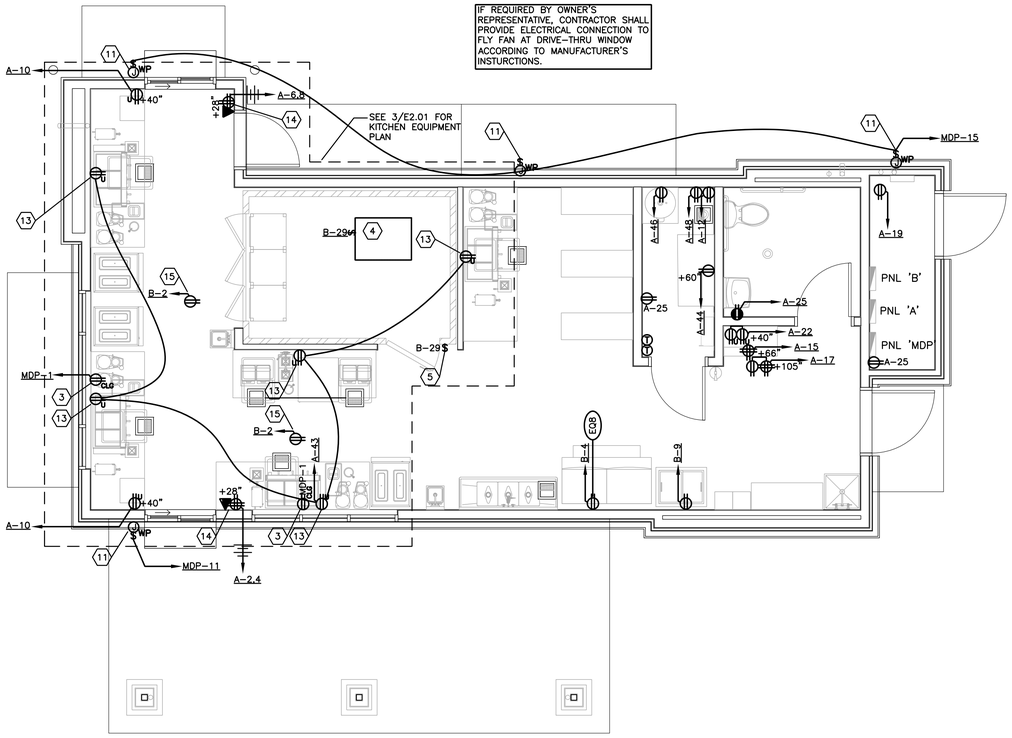

PLAN NORTH

1 ELECTRICAL POWER PLAN

1/4" = 1'-0"

0 2' 4' 8'

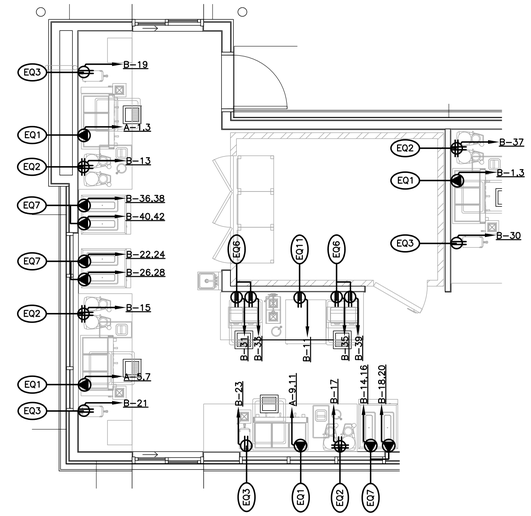

PLAN NORTH

3 KITCHEN EQ PLAN

1/4" = 1'-0"

0 2' 4' 8'

KEYED NOTES

1. MECHANICAL CONTRACTOR SHALL PROVIDE DUCT MOUNTED SMOKE DETECTOR. ELECTRICAL SHALL INSTALL FIRE ALARM DUCT SMOKE DETECTOR IN RETURN AIR WITH REMOTE AUDIO/VISUAL INDICATOR MOUNTED AT LOCATION THAT CAN BE SEEN AND HEARD. DETECTOR TO SHUT OFF AIR HANDLING UNIT UPON ACTIVATION. EC TO CONNECT DETECTOR TO CIRCUIT A-21 AND PROVIDE INTER-CONNECTING WIRING BETWEEN DETECTOR AND REMOTE INDICATOR.
2. PROVIDE WEATHERPROOF JUNCTION BOX AND TOGGLE TYPE 20A-1P DISCONNECT SWITCH FOR BUILDING SIGNS. PROVIDE FINAL CONNECTION TO SIGN AS REQUIRED PER MANUFACTURER'S INSTRUCTIONS. CIRCUIT SHALL BE CONTROLLED BY PHOTOCELL ON/TIMECLOCK OFF. COORDINATE LOCATION W/ ARCHITECTURAL ELEVATIONS & SIGN VENDOR PRIOR TO ROUGH IN.
3. PROVIDE CEILING-MOUNTED SHOW WINDOW RECEPTACLE. RECEPTACLE SHALL BE CONTROLLED BY TIMECLOCK. REFER TO "LIGHTING CONTROL DIAGRAM" ON SHEET E1.01.
4. PROVIDE 20A, 120V/1P DISCONNECT SWITCH WITH (2)#12 & (1)#12G. IN 1/2" CONDUIT TO WALK-IN COOLER EVAPORATOR. VERIFY EXACT LOCATION PRIOR TO ROUGH-IN.
5. PROVIDE 20A, 120V ELECTRICAL CONNECTION TO WALK-IN COOLER LIGHTS/CONTROLS ACCORDING TO MANUFACTURER'S INSTRUCTIONS.
6. NEW ROOF TOP UNITS (RTU-1&2), 208V, 3Ø (51 MCA). EC TO PROVIDE (3)#6 & (1)#10 GND IN 3/4" CONDUIT AND 208V, 3Ø, 60A N.F. NEMA 3R DISCONNECT SWITCH. COORDINATE ALL REQUIREMENTS WITH HVAC CONTRACTOR PRIOR TO BID.
7. PROVIDE 30A, 208V/3P, DISCONNECT SWITCH IN NEMA 3R ENCLOSURE WITH (3)#12 & (1)#12G. IN 1/2" CONDUIT TO REMOTE CONDENSING UNIT FOR WALK-IN COOLER LOCATED ON ROOF. VERIFY EXACT LOCATION PRIOR TO ROUGH-IN.
8. PROVIDE 60A, 208V/3P, DISCONNECT SWITCH IN NEMA 3R ENCLOSURE WITH (3)#8 & (1)#10G. IN 3/4" CONDUIT TO REMOTE CONDENSING UNIT FOR ICE MACHINE LOCATED ON ROOF. VERIFY EXACT LOCATION PRIOR TO ROUGH-IN.
9. PROVIDE WEATHERPROOF SERVICE RECEPTACLE FOR MECHANICAL EQUIPMENT. MOUNT ON NON-REMOVABLE PANEL OF EQUIPMENT.
10. EC TO PROVIDE JBOX FOR HARDWIRE CONNECTION TO AIR CURTAIN. AIR CURTAINS PROVIDED WITH MICROSWITCH CONTROL. COORDINATE INSTALLATION WITH MANUFACTURER'S INSTRUCTION TO ENSURE AIR CUTRAIN ACTIVATES WHEN DOOR/WINDOW OPENS.
11. PROVIDE 20A, 120V ELECTRICAL CONNECTION WITH CONCEALED WEATHERPROOF TOGGLE DISCONECT SWITCH TO MENU BOARD. COORDINATE LOCATION WITH ARCHITECTURAL ELEVATIONS PRIOR TO ROUGH-IN.
12. NEW 12kW WATER HEATER, 208V, 1Ø. EC TO PROVIDE (2)#8 & (1)#10 GND IN 3/4" CONDUIT AND 208V, 3Ø, 60A N.F. NEMA 1R DISCONNECT SWITCH. COORDINATE ALL REQUIREMENTS WITH PLUMBING CONTRACTOR PRIOR TO BID.
13. IPAD RECEPTACLE WITH USB JACKS TYP. OF (5) CEILING MOUNTED.
14. QUAD OUTLET FOR REGISTER & PRINTER.
15. CEILING MOUNTED OUTLETS FOR SONOS SPEAKER.

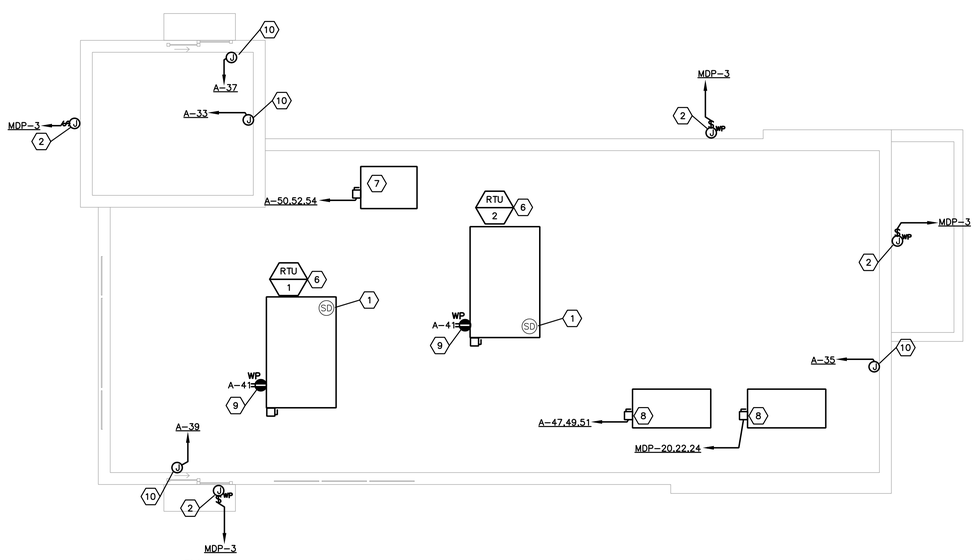

PLAN NORTH

2 ELECTRICAL HVAC PLAN

1/4" = 1'-0"

0 2' 4' 8'

HVAC NOTES

A. EC SHALL FURNISH AND INSTALL PITCH POCKETS FOR POWER AND CONTROL WIRING, AND IS TO MAINTAIN 12" MINIMUM CLEARANCE FROM BACK PANEL OF AIR CONDITION UNITS. DO NOT PENETRATE BOTTOM OF RTU CURB.

B. THE ELECTRICAL CONTRACTOR SHALL INSTALL LOW-VOLTAGE CONTROL WIRING FOR ALL AIR CONDITIONING CONTROLS.

C. EC SHALL FURNISH AND INSTALL DISCONNECTS FOR RTUS AND INTERLOCK RESTROOM FAN TO RUN CONTINUOUSLY WHILE WORK AREA LIGHTS ARE ON. (SEE DETAIL 2/E1.01)

D. FOR EACH AIR CONDITIONING UNIT, THE EC IS TO PROVIDE ONE SINGLE-GANG RECEPTACLE TEST STATION FOR THE REMOTE SENSOR AND/OR T-STAT, AND ONE DOUBLE-GANG RECEPTACLE REST STATION FOR THE ANNUNCIATOR, WITH GREEN AND RED LIGHT INDICATORS. THE FIRE AND MECHANICAL INSPECTORS WILL DETERMINE SUITABLE LOCATION FOR TEST STATIONS. ANNUNCIATORS AND TEST STATION WILL BE LOOPED IN THE CIRCUITRY OF THE SMOKE DETECTION DEVICES. WIRING WILL BE INSTALLED BY EC.

SHEET NOTES

A. VERIFY EXACT LOCATIONS OF HVAC EQUIPMENT, CONDUIT STUB-UPS AND POWER CONNECTIONS PRIOR TO ROUGH-IN.

B. VERIFY EXACT LOCATION, MOUNTING HEIGHTS AND CONDUIT ROUTING FOR ALL THERMOSTATS, TEMPERATURE SENSORS, HUMIDISTATS AND CO^2 SENSORS WITH TEMPERATURE CONTROLS CONTRACTOR PRIOR TO ROUGH-IN.

C. REFER TO MECHANICAL DRAWINGS FOR ADDITIONAL ELECTRICAL REQUIREMENTS. COORDINATE PROVISIONS FOR ALL CONTROL CONDUIT AND WIRING AS REQUIRED FOR INTERLOCKING OF FANS, MOTORS, ETC. REFER TO SPECIFICATIONS FOR ADDITIONAL REQUIREMENTS.

D. ALL DEVICES INSTALLED ON HVAC EQUIPMENT SHALL BE MOUNTED ON A NON-REMOVABLE PANEL OF THE EQUIPMENT. THIS LOCATION SHALL BE COORDINATED WITH THE MECHANICAL AND/OR PLUMBING CONTRACTOR PRIOR TO COMMENCING ANY ROUGH-IN WORK.

E. ALL ELECTRICAL DEVICES SHALL BE WHITE IN COLOR WITH WHITE COVERPLATES.

F. PROVIDE AN EQUIPMENT GROUNDING CONDUCTOR WITHIN ALL FEEDERS AND BRANCH CIRCUITS.

NOTES:

A. ELECTRICAL CONTRACTOR SHALL MAKE ALL FINAL CONNECTIONS TO KITCHEN EQUIPMENT. SEE EQUIPMENT RESPONSIBILITY SCHEDULE FOR DETAILS.

B. ALL HARDWIRED CONNECTIONS TO BE MADE WITH SEAL-TIGHT FLEXIBLE METAL CONDUIT WITH INSULATED GROUND WIRE INSTALLED WITH PHASE AND NEUTRAL CONDUCTORS. GROUND WIRE TO BE BONDED AT BOTH ENDS.

C. ELECTRICAL CONTRACTOR SHALL VERIFY ALL EQUIPMENT REQUIREMENTS (INCLUDING THOSE SCHEDULED) WITH SUPPLIER PRIOR TO ROUGH-IN.

D. ALL 15A AND 20A, 120V RECEPTACLES IN KITCHEN SHALL BE GFCI PROTECTED.

WORKSTATION EQUIPMENT SCHEDULE

ITEM	DESCRIPTION	VOLT/PHASE	LOAD	CONN.	HEIGHT	WIRE & CONDUIT	REMARKS
EQ1	ESPRESSO MACHINE	208/1	29.3FLA	NEMA 6-50	+27"	(2)#6 & (1)#10G, 3/4"C	--
EQ2	GRINDER	120/1	5.4FLA	NEMA 5-20	+27"	(2)#12 & (1)#12G, 3/4"C	QUAD OUTLET FOR COFFEE GRINDER
EQ2a	DOSER	--	--	--	--	--	--
EQ3	HOT WATER DISPENSER	120/1	15.4FLA	NEMA 5-20	+27"	(2)#12 & (1)#12G, 3/4"C	
EQ6	BLENDER	120/1	12.9FLA	NEMA 5-20	+27"	(2)#12 & (1)#12G, 3/4"C	--
EQ7	FROZEN BEV. DISPENSER	208/1	16FLA	(2)NEMA L620	+27"	(2)SETS: (2)#12 & (1)#12G, 3/4"C	--
EQ8	ICE MACHINE	115/1	1.1FLA	NEMA 5-20	+84"	(2)#12 & (1)#12G, 3/4"C	--
EQ11	U.C. FRIDGE	120/1	2.0FLA	NEMA 5-15P	+27"	(2)#12 & (1)#12G, 3/4"C	--

MECHANICAL EQUIPMENT SCHEDULE

MARK	LOAD		VOLTAGE /PHASE	TYPE	WIRE	CKT	
	MCA	MOCP					
RTU-1,2	51	60	208/3	60A, NEMA-3R	3#6, #10G., 3/4"C	MDP-19,21,23	MDP-25,27,29

ARCHITECT
CORALIC, LLC
EDIN CORALIC
9700 MACKENZIE ROAD, STE 222
ST. LOUIS, MO 63123
p: 314.578.4953
edin@coralicarchitecture.com

STRUCTURAL ENGINEER
JAMES C. KREHER
JIM KREHER
208 N. MAIN STREET,
COLUMBIA, IL 62236
p: 618.281.8505
jimk@kreherengineering.com

MEP ENGINEER
Case Engineering
DARRELL R. CASE
796 MERUS CT.,
FENTON, MO 63026
T. 636.349.1600 F. 636.349.1730
dcase@caseengineeringinc.com

10.11.2021

STATE OF MISSOURI
DARRELL R. CASE
NUMBER PE-23303
PROFESSIONAL ENGINEER

Project No: MO0102

Dutch Bros Coffee - New Freestanding Store

500 NW Chipman Road, Lee's Summit, Missouri 64086
for: Dutch Bros Coffee
110 SW 4th St.
Grants Pass, OR 97526

ISSUED FOR PERMIT:
10.11.2021

REV:	DATE:	DESCRIPTION:

SHEET NAME:

POWER PLAN

SHEET NUMBER:

E2.01

© 2020 DB Franchising USA, LLC

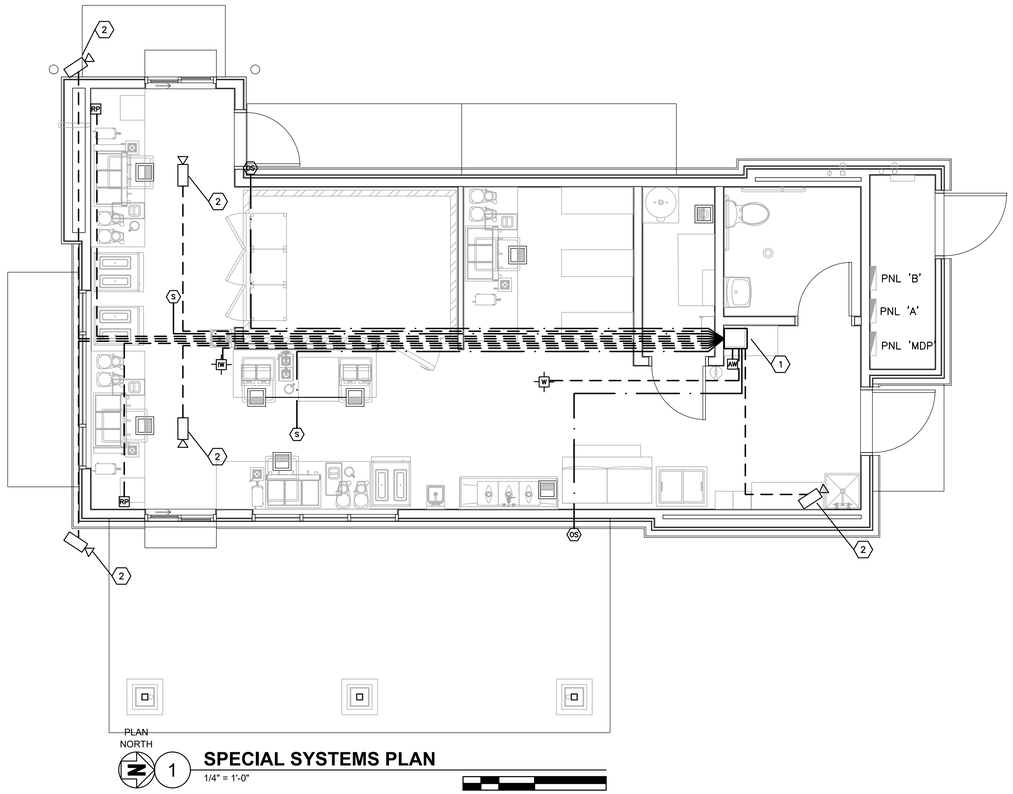

SPECIAL SYSTEMS PLAN

1/4" = 1'-0"

0 2' 4' 8'

LOW VOLTAGE EQUIPMENT SCHEDULE

SYMBOL	DESCRIPTION	MODEL	WIRING NOTES	NOTES	PROVIDER/INSTALLER	QTY
	SECURITY CAMERA	BY SECURITY CONTRACTOR	CAT 6	ALL NETWORK DROPS TO TERMINATE AT NETWORK CABINET WITH RJ-45. ENSURE EACH END IS PROPERLY LABELED ON SWITCH AND DROP. PROVIDE 1' SERVICE LOOP FOR ALL CABLE RUNS TO ALLOW FOR INSTALLATION ADJUSTMENTS.	SECURITY CONTRACTOR	–
SM	SECURITY MONITOR	BY SECURITY CONTRACTOR	CAT 6	ALL NETWORK DROPS TO TERMINATE AT NETWORK CABINET WITH RJ-45. ENSURE EACH END IS PROPERLY LABELED ON SWITCH AND DROP. PROVIDE 1' SERVICE LOOP FOR ALL CABLE RUNS TO ALLOW FOR INSTALLATION ADJUSTMENTS.	SECURITY CONTRACTOR	–
S	SPEAKER	QSC-AD-S6T -WH	INDOOR SPEAKER CABLE TO BE CAT6		OWNER/CONTRACTOR	–
OS	SPEAKER	QSC-AD-S6T -WH	OUTDOOR SPEAKER WIRE TO BE 16 GA. 2-CONDUCTOR, SHIELDED SPEAKER CABLE.		OWNER/CONTRACTOR	–
W	WIRELESS ACCESS POINT	PER TOUCHPOINT	CAT 6	INDOOR AP SEE GENERAL NOTE A. EXTERIOR AP SEE GENERAL NOTE B.	OWNER/CONTRACTOR	–
RP	RECEIPT PRINTER	PER OWNER	WIRELESS UNLESS SHOWN OTHERWISE CAT 5E FOR WIRED MODEL	INSTALL NETWORK DROP BELOW THE FRONT COUNTER WHERE SHOWN.	OWNER/OWNER	–
AW	IPOD AUDIO WIRE	NA	ALL AUDIO WIRE TO BE 22 GA, SHIELDED AUDIO CABLE	IPOD WALL MOUNTED SUPPORT AT THIS LOCATION. 1/8" MINI STEREO PLUG ON IPOD SIDE. ON AUDIO PROCESSOR SIDE, WIRE WILL SPLIT INTO L/R SIGNAL INPUT AS ILLUSTRATED ON AUDIO EQUIPMENT DIAGRAM.	OWNER/CONTRACTOR	–
IW	INDOOR ACCESS POINT	PER TOUCHPOINT	CAT 6	MOUNTED TO CEILING TILE.	OWNER/CONTRACTOR	–

NOTES:

A. WIRELESS ACCESS POINT THAT WILL NEED A NETWORK DROP RUN THROUGH THE CEILING AND MOUNTED INTO A CEILING TILE AT THE FRONT OF THE STAND IN FRONT OF THE ESPRESSO MACHINES. THIS LINE WILL BE RUN FROM THE POE INJECTOR IN THE NETWORK RACK TO THE INDOOR AP AND PLUGGED INTO THE "MAIN" PORT ON THE BACK OF THE AP. THE SECONDARY PORT IS USED TO DAISY CHAIN FROM THE INDOOR AP BACK TO THE NETWORK RACK AND PLUGGED INTO THE "LAN" PORT OF THE EXTERNAL AP'S POE INJECTOR.

B. WIRELESS ACCESS POINT IS TO BE INSTALLED EXTERNALLY ON THE INSIDE OF THE PARAPET WALL, SEE ROOF PLAN FOR LOCATION. THERE WILL NEED TO BE A NETWORK DROP RUNNING FROM THE "POE" PORT ON THE EXTERNAL ACCESS POINT'S POE INJECTOR (TO BE PLUGGED IN THE NETWORK RACK AND PLACED BESIDE THE MINI CLOUD PC). THE WIRELESS ACCESS POINT NEEDS TO BE MOUNTED TO THE PEAK DIRECTLY. THE WIRELESS ACCESS POINT NEEDS TO BE SLIGHTLY BELOW THE TOP OF THE BUILDING PEAK AND TO THE SIDE HOWEVER THE ANTENNAS SHOULD BE INSTALLED AND SLIGHTLY ANGLED OUTWARD DIAGONALLY TOWARD THE REAR OF THE BUILDING FOR MAXIMUM COVERAGE.

KEYED NOTES

1. NETWORK CABINET PER PLAN. PROVIDE WITH TWO PANOUT SHELVES, 1U.
2. PROVIDE MUD RINGS FOR CABLE PENETRATIONS THROUGH WALLS, TYP. CONTRACTOR TO PROVIDE APPROPRIATELY SIZED MUD RING GIVEN THE PROPOSED CONFIGURATION.

DUTCH BROS

CORALIC ARCHITECTURE

ARCHITECT
CORALIC, LLC
EDIN CORALIC
9700 MACKENZIE ROAD, STE 222
ST. LOUIS, MO 63123
p: 314.578.4955
edin@coralicarchitecture.com

STRUCTURAL ENGINEER
JAMES C. KREHER
JIM KREHER
208 N. MAIN STREET,
COLUMBIA, IL 62236
p: 618.281.8505
jimk@kreherengineering.com

MEP ENGINEER
Case Engineering
DARRELL R. CASE
796 MERUS CT.,
FENTON, MO 63026
T. 636.349.1600 F. 636.349.1730
dcase@caseengineeringinc.com

10.11.2021

STATE OF MISSOURI
DARRELL R. CASE
NUMBER PE-23303
PROFESSIONAL ENGINEER

Project No: MO0102

Dutch Bros Coffee - New Freestanding Store

500 NW Chipman Road, Lee's Summit, Missouri 64086
for: Dutch Bros Coffee
110 SW 4th St.
Grants Pass, OR 97526

ISSUED FOR PERMIT:
10.11.2021

REV:	DATE:	DESCRIPTION:

SHEET NAME:

SPECIAL SYSTEMS FLOOR PLAN

SHEET NUMBER:

E2.02

© 2020 DB Franchising USA, LLC

NEW PANEL BOARD MDP

SURFACE MOUNTED — 42,000 A.I.C. FULLY RATED
120/208 VOLTS — 3 PHASE — 4 WIRE — 600 AMP. BUS
CIRCUIT BREAKER TYPE 600 MLO — FED FROM DISCONNECT

	CKT. NO.	TRIP AMPS	NO. POLE	LOAD SERVED	LOAD— V. A. AØ	BØ	CØ	LOAD SERVED	NO. POLE	TRIP AMPS	CKT. NO.	
C1	1	20	1	SHOW WINDOW REC.	720			SPARE	1	20	2	
C2	3	20	1	BUILDING SIGN		1000		PARKING LOT LTG	1	20	4	C2
TS	5	20	1	EF—1			300	PARKING LOT LTG	1	20	6	C2
	7	20	1	GENERAL LTG	720			SPARE	1	20	8	
C2	9	20	1	PYLON SIGN		1200		EXTERIOR BUILDING LTG	1	20	10	C2
C1	11	20	1	(4)BLDG MENU BOARD			500	PARAPET LIGHT	1	20	12	C2
	13	20	1	TIMECLOCK	200			PARAPET LIGHT	1	20	14	C2
C1	15	20	1	(4)BLDG MENU BOARD		500		PARAPET LIGHT	1	20	16	C2
C1	17	20	1	MENU BOARD			1200	RTU DUCT DETECTOR	1	20	18	HACR
HACR	19	60	3	RTU—1	6120			ICE MACHINE COND.	3	40	20	
	21					6120					22	
	23						6120				24	
HACR	25	60	3	RTU—2	6120			WATER HEATER	3	50	26	
	27					6120					28	
	29						6120				30	
					15812							
SFB		200	3	SUB—FEED TO PANEL "A"		17712						
							15428					
					17644							
SFB		200	3	SUB—FEED TO PANEL "B"		19576						
							17648					
					54764	61396	55724					

TOTAL LOAD SUMMARY (ALL PANELS)

LOAD DESCRIPTION	DEMAND FACTOR D.F.	VOLT — AMPS CONNECTED	DEMAND
LIGHTING	1.25	9360	11700
RECEPTACLES	NEC	5860	5860
MOTORS	NEC	—	—
MISC. EQUIPMENT	1.00	37374	37374
KITCHEN EQUIPMENT	0.65	82570	53670
HVAC EQUIPMENT	1.00	36720	36720
TOTAL—		171884	145324

PANELBOARD LOAD = 145324 V.A.
FULL LOAD AMPS = 404 A.

LO HAND LOCK "OFF/ON" CLAMP DEVICE
HACR HEATING, AIR CONDITION AND REFRIGERATION RATED BKR
G GROUND FAULT CIRCUIT INTERRUPTING BKR
C# ROUTE CIRCUIT THROUGH CONTACTOR INDICATED

NEW PANEL BOARD A

SURFACE MOUNTED — 22,000 A.I.C. FULLY RATED
120/208 VOLTS — 3 PHASE — 4 WIRE — 200 AMP. BUS
CIRCUIT BREAKER TYPE 200 AMP. MLO — FED FROM MDP

	CKT. NO.	TRIP AMPS	NO. POLE	LOAD SERVED	LOAD— V. A. AØ	BØ	CØ	LOAD SERVED	NO. POLE	TRIP AMPS	CKT. NO.	
G	1	50	2	ESPRESSO MACHINE	3516 180			CASH REGISTERS	1	20	2	G
	3					3516 500		PRINTER OUTLETS	1	20	4	G
G	5	50	2	ESPRESSO MACHINE			3516 180	CASH REGISTERS	1	20	6	G
	7				3516 500			PRINTER OUTLETS	1	20	8	G
G	9	50	2	ESPRESSO MACHINE		3516 720		USB REC.	1	20	10	G
	11						3516 1656	BOOSTER PUMP	1	20	12	
	13	20	1	SPARE	— —			SPARE	1	20	14	
	15	20	1	DATA RACK REC.		360		SPARE	1	20	16	
	17	20	1	DATA RACK REC.			180	SPARE	1	20	18	
	19	20	1	IRRIGATION CONTROL	500			SPARE	1	20	20	
	21	20	1	SPARE		— — 360		IT REC.	1	20	22	
	23	20	1	SPARE			— —	SPARE	1	20	24	
	25	20	1	RR / BOH REC.	540			SPARE	1	20	26	
	27	20	1	SPARE		— —		SPARE	1	20	28	
	29	20	1	SPARE			— —	SPARE	1	20	30	
	31	20	1	SPARE	— —			SPARE	1	20	32	
	33	30	1	AIR CURTAIN—RUNNER		1000		SPARE	1	20	34	
	35	20	1	AIR CURTAIN—BACK D.			1000	SPARE	1	20	36	
	37	20	1	AIR CURTAIN—DRIVE T.	1000			SPARE	1	20	38	
	39	20	1	AIR CURTAIN—WALK UP		1000		SPARE	2	40	40	
	41	20	1	ROOF REC.			360				42	
G	43	20	1	USB REC.	540			WATER FILTRATION	1	20	44	
G	45	20	1	USB REC.		720		SPARE	1	20	46	
	47	40	3	ICE MACHINE COND.			3328	SPARE	1	20	48	
	49				3328 1692			W.I. CONDENSER	3	20	50	
	51					3328 1692					52	
	53	20	1	SPARE			— — 1692				54	
					15812	17712	15428					

LOAD DESCRIPTION	DEMAND FACTOR D.F.	VOLT — AMPS CONNECTED	DEMAND
LIGHTING	1.25	—	—
RECEPTACLES	NEC	5140	5140
MOTORS	NEC	—	—
MISC. EQUIPMENT	1.00	14190	14190
KITCHEN EQUIPMENT	0.65	29622	19254
HVAC EQUIPMENT	1.00	—	—
TOTAL—		48952	38584

PANELBOARD LOAD = 38584 V.A.
FULL LOAD AMPS = 107 A.

LO HAND LOCK "OFF/ON" CLAMP DEVICE
HACR HEATING, AIR CONDITION AND REFRIGERATION RATED BKR
G GROUND FAULT CIRCUIT INTERRUPTING BKR
C# ROUTE CIRCUIT THROUGH CONTACTOR INDICATED

NEW PANEL BOARD B

SURFACE MOUNTED — 22,000 A.I.C. FULLY RATED
120/208 VOLTS — 3 PHASE — 4 WIRE — 200 AMP. BUS
CIRCUIT BREAKER TYPE 200 AMP. MLO — FED FROM MDP

	CKT. NO.	TRIP AMPS	NO. POLE	LOAD SERVED	LOAD— V. A. AØ	BØ	CØ	LOAD SERVED	NO. POLE	TRIP AMPS	CKT. NO.	
G	1	50	2	ESPRESSO MACHINE	3516 200			SPEAKERS	1	20	2	
	3					3516 132		ICE MACHINE	1	20	4	G
	5	15	1	SPARE			— — 132	ICE MACHINE	1	20	6	G
	7	15	1	SPARE	— —			SPARE	1	20	8	
G	9	20	1	HUG FREEZER		1500		SPARE	1	20	10	
G	11	20	1	UC FRIDGE			240	SPARE	1	20	12	
G	13	20	1	GRINDERS	1300 1920			FROZEN BEV MACHINE 1 (A)	2	20	14	G
G	15	20	1	GRINDERS		1300 1920					16	
G	17	20	1	GRINDERS			1300 1920	FROZEN BEV MACHINE 2 (A)	2	20	18	G
G	19	20	1	HOT WATER DISPENSER	1848 1920						20	
G	21	20	1	HOT WATER DISPENSER		1848 1920		FROZEN BEV MACHINE 1 (B)	2	20	22	G
G	23	20	1	HOT WATER DISPENSER			1848 1920				24	
	25	20	1	SPARE	— — 1920			FROZEN BEV MACHINE 2 (B)	2	20	26	G
	27	20	1	SPARE		— — 1920					28	
	29	20	1	WALK—IN EVAP/LTG			1000 1848	HOT WATER DISPENSER	1	20	30	G
G	31	20	1	VITAMIX	1800			SPARE	1	20	32	
G	33	30	1	VITAMIX		1800		SPARE	1	20	34	
G	35	20	1	VITAMIX			1800 1920	FROZEN BEV MACHINE 1 (C)	2	20	36	G
G	37	20	1	GRINDERS	1300 1920						38	
G	39	20	1	VITAMIX		1800 1920		FROZEN BEV MACHINE 2 (C)	2	20	40	G
	41	20	1	SPARE			1800 1920				42	
					17644	19576	17648					

LOAD DESCRIPTION	DEMAND FACTOR D.F.	VOLT — AMPS CONNECTED	DEMAND
LIGHTING	1.25	—	—
RECEPTACLES	NEC	720	720
MOTORS	NEC	—	—
MISC. EQUIPMENT	1.00	1200	1200
KITCHEN EQUIPMENT	0.65	52948	34416
HVAC EQUIPMENT	1.00	—	—
TOTAL—		54868	36336

PANELBOARD LOAD = 36336 V.A.
FULL LOAD AMPS = 101 A.

LO HAND LOCK "OFF/ON" CLAMP DEVICE
HACR HEATING, AIR CONDITION AND REFRIGERATION RATED BKR
G GROUND FAULT CIRCUIT INTERRUPTING BKR
C# ROUTE CIRCUIT THROUGH CONTACTOR INDICATED

GENERAL NOTES

1. EC TO PROVIDE HANDLE TIE ON ALL MULTIWIRE BRANCH CIRCUITS PER NEC 210.4(B).
2. ALL SPARE CIRCUIT BREAKERS AND DISCONNECT SWITCHES SHALL BE LEFT IN THE OFF POSITION.
3. EC SHALL VERIFY THE VOLTAGE AND AMPERAGE REQUIREMENTS OF ALL EQUIPMENT DELIVERED TO THE SITE PRIOR TO CONNECTION. EC SHALL NOTIFY OWNER OF ANY DIFFERENCE.

SHEET NOTE

A. PER NEC 408.4 — EVERY BRANCH CIRCUIT AND CIRCUIT MODIFICATION MUST BE UNIQUELY IDENTIFIED. PROVIDE A TAG AT EACH CIRCUIT CONDUCTORS JUNCTION BOX, OUTLET, SWITCH, ETC. DESIGNATION WHICH ELECTRICAL PANEL AND CIRCUIT NUMBER THE CONDUCTOR IS FED FROM.

B. EC TO POST ARC—FLASH HAZARD WARNINGS, PER NEC ART. 110.16 A POWER SYSTEM STUDY IS TO BE PERFORMED TO DETERMINE THIS VALUE AND AVAILABLE FAULT CURRENT AT ALL PANELS.

C. EC TO PROVIDE LABELS ON SERVICE EQUIPMENT TO IDENTIFY THE AVAILABLE FAULT CURRENT AS REQUIRED BY NEC ARTICLE 110.24.

SERVICE NOTES

IF THE CONTRACTOR ELECTS TO PROVIDE INCOMING SERVICE FEEDERS WITH ALUMINUM CONDUCTORS, CONTRACTOR TO PROVIDE ALUMINUM CONDUCTORS EQUIVALENT IN AMPERAGE CAPACITY TO THE COPPER CONDUCTORS SHOWN ON PLANS. COORDINATE LUG REQUIREMENTS ON EQUIPMENT WHERE AL CONDUCTORS WILL TERMINATE

CONTRACTOR TO FIELD VERIFY THE DISTANCE FROM THE UTILITY TRANSFORMER TO THE SERVICE DISCONNECT SWITCH. INCREASE THE CONDUCTOR SIZE TO ADJUST FOR VOLTAGE DROP (NOTE: VOLTAGE DROP ON THE INCOMING SERVICE FEEDERS SHALL BE A MAXIMUM OF 2%. CONTRACTOR TO INCREASE THE SIZE AND NUMBER OF CONDUITS BASED ON THE CONDUCTORS INSTALLED).

CONTRACTOR TO PROVIDE MAIN GROUNDING ELECTRODE CONDUCTOR, FOR THE GROUNDING ELECTRODE SYSTEM, BASE ON THE SIZE AND TYPE OF SERVICE CONDUCTORS INSTALLED (PER N.E.C. TABLE 205.66). THE GROUNDING ELECTRODE SYSTEM SHALL BE INSTALLED IN ACCORDANCE WITH ARTICLE 250 OF THE CURRENT ADOPTED VERSION OF THE N.E.C..

CONTRACTOR TO FIELD VERIFY WITH THE UTILITY COMPANY THE AVAILABLE FAULT CURRENT AT UTILITY TRANSFORMER AND ENSURE ALL EQUIPMENT HAS AN A.I.C. RATING GREATER THAN OR EQUAL TO THE CALCULATED AVAILABLE FAULT CURRENT AT THE EQUIPMENT.

NEW PANELS HALL BE LABELED TO IDENTIFY THE AVAILABLE FAULT CURRENT AT THE PANEL IN ACCORDANCE WITH NEC REQUIREMENTS.

NEW PANELS SHALL BE LABELED TO IDENTIFY THE ARC FLASH HAZARD AT THE PANEL IN ACCORDANCE WITH NEC REQUIREMENTS.

SERIES RATED CIRCUIT BREAKERS TO COMPLY WITH THE REQUIREMENTS OF NEC 240.86, DISCONNECTING MEANS SHALL BE LABELED PER NEC 110.22.

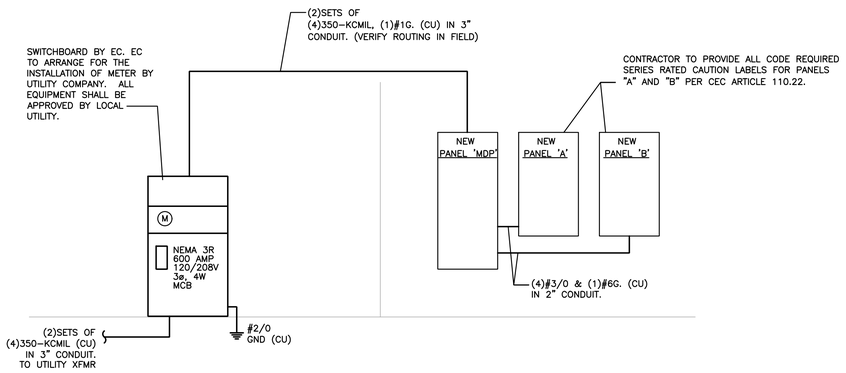

GROUNDING DETAIL

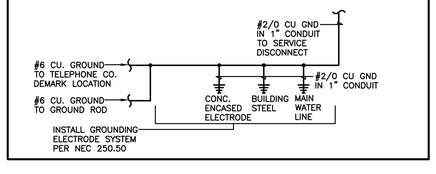

DUTCH BROS

CORALIC ARCHITECTURE

ARCHITECT
CORALIC, LLC
EDIN CORALIC
9700 MACKENZIE ROAD, STE 222
ST. LOUIS, MO 63123
p: 314.578.4953
edin@coralicarchitecture.com

STRUCTURAL ENGINEER
JAMES C. KREHER
JIM KREHER
208 N. MAIN STREET,
COLUMBIA, IL 62236
p: 618.281.8505
jimk@kreherengineering.com

MEP ENGINEER
Case Engineering
DARRELL R. CASE
796 MERUS CT.,
FENTON, MO 63026
T. 636.349.1600 F. 636.349.1730
dcase@caseengineeringinc.com

10.11.2021

STATE OF MISSOURI — DARRELL R. CASE — NUMBER PE-23303 — PROFESSIONAL ENGINEER

Project No: MO0102

Dutch Bros Coffee - New Freestanding Store

500 NW Chipman Road, Lee's Summit, Missouri 64086
for: Dutch Bros Coffee
110 SW 4th St.
Grants Pass, OR 97526

ISSUED FOR PERMIT:
10.11.2021

REV:	DATE:	DESCRIPTION:

SHEET NAME:

PANEL SCHEDULES

SHEET NUMBER:

E3.01

© 2020 DB Franchising USA, LLC

ELECTRICAL SPECIFICATIONS:

1.0 SUMMARY & GENERAL REQUIREMENTS

1.1 The work under this division includes furnishing all labor, material and equipment necessary for the complete installation and operation of the electrical systems in accordance with electrical drawings and specifications.

1.2 All drawings are schematic in nature and the required installation is not limited to what is shown. All appurtenances necessary to provide a complete and operational system must be included in the contractors bid and work. The work shall also include the completion of such minor details of electrical work not noted or shown which are necessary for the successful operation of all electrical systems described on the drawings or required by these specifications.

1.3 The contractor shall visit the job site and examine the drawings to familiarize himself with all existing conditions and new requirements which may effect his bid or work. No allowances will be made for existing conditions or the contractors failure to include cost of accommodating existing conditions.

1.4 It is contractors responsibility to obtain clarification of any apparent conflict or inconsistency in the drawings, specifications, or design prior to his bid, in writing with the engineer. Otherwise the contractor accepts responsibility to correct (at his cost) any such items to meet the intent as interpreted by the engineer.

1.5 The contractor shall coordinate and provide information as required to all serving utilities in a timely manner as necessary to provide the service required and meet utility requirements. Immediate coordination is required for most projects. Field coordinate all requirements with utility companies prior to trenching.

1.6 Refer to architectural, mechanical, civil, structural, and/or equipment suppliers drawings and specifications for exact equipment locations, loads and additional requirements. Representations of the work specific to the other disciplines is shown on the electrical drawings for clarity only.

1.7 Contractor shall be responsible to install all equipment per manufactures strict recommendations. Otherwise the contractor assumes responsibility (at his cost) to correct any installation not in compliance with the manufactures recommendations and as interpreted by the engineer.

1.8 Plan and install work in such a manner as to prevent obstructions, and keep openings and passageways clear. Review general contract drawings for conditions affecting this work and verify spaces in which work will be installed. Where interferences with structural, mechanical or otherwise exist, or where job conditions require reasonable changes in locations and arrangement of indicated equipment, conduit, outlets or wiring, the contractor shall make such changes without additional cost to owner, architect or engineer.

1.9 The contractor shall not interrupt or remove any existing circuits or equipment unless noted otherwise on plans. Any damaged or disrupted circuits or equipment shall be restored to like new condition at no additional cost to owner, architect or engineer.

1.10 All penetrations of fire-resistive floors or shaft walls shall be protected by materials and installation details that conform to Underwriters Laboratories listings for "through-penetration fire stop systems." The contractor shall submit shop drawing details, furnished by the manufacturer of the fire stop material, which show complete conformance to the UL to the UL to the architect. The drawings shall by specific for each penetration, with all variables defined.

1.11 The contractor shall provide new, typed, panelboard directories for all new and/or existing panels within the scope of these project. The directories shall indicate the load type and area served. Provide all field verification work as necessary.

1.12 Contractor shall submit shop drawings for all new service entrance equipment panelboards, distribution panels, transformers, fusible switches, circuit breakers, disconnect switches, lighting fixtures, etc. that may be required for this project.

1.13 The final determination of exit lighting locations and egress pathways shall be the responsibility of the architect. The contractor shall confirm and verify the locations of all exit and emergency lights with the architect prior to any installations.

1.14 The contractor shall field verify the source of all existing lighting and power circuits (if applicable) by panel and circuit numbers, whether existing or new for the area and equipment in the scope of this project.

1.15 Electrical contractor shall coordinate all device and lighting fixture locations, finishes and dimensions with architect prior to purchasing any equipment. Also confirm the exact ceiling type prior to ordering any fixtures.

1.16 All branch circuits shall be minimum: #12 THHN/THWN copper with #12 copper bond in 1/2" conduit unless noted otherwise. All conductors, regardless of size shall be copper with 90 degree C insulation (THHN/THWN OR XHHW). All wiring shall be in conduit with NEC recommended sized bonding conductors unless noted otherwise.

2.0 CODES AND PERMITS

2.1 All electrical material, equipment and work shall comply with the most recent edition of National Electrical Code, U.B.C., I.B.C., IECC, NFPA 72, 75, 101, and local and state building codes and ordinances, Americans with disabilities Act, E.P.A., and utility company requirements.

2.2 The contractor is responsible to obtain all necessary permits, variances, and approvals, etc. (at his cost) which may be required for completion of this work.

3.0 EQUIPMENT AND MATERIAL

3.1 The Electrical Contractor shall provide all materials, equipment and accessories necessary, whether stated on drawings or not, to achieve the required completion and fully functional electrical system.

3.2 All equipment and material furnished under this section shall be new, except where noted otherwise on the drawings, and shall be the standard product of established manufactures regularly engaged in the production of such equipment. All materials, apparatus and equipment shall be new, of the best grade and subject to approval of the architect or engineer. All material used shall have the U.L. label when normally available. Installations shall be in accordance with the best practice of electrical trades and by skilled mechanics.

4.0 SERVICE ENTRANCE EQUIPMENT

4.1 Service entrance equipment distribution switchboards shall be the dead front type with molded circuit breakers or fusible switches as shown on drawings. Service entrance equipment and switchboards shall be UL label and shall have silver plated copper bussing for voltage and amperage rating as shown on drawings. Metering and primary pull section shall be barriered from other work and approved by local utility company and other authority having jurisdiction.

4.2 Contractor shall coordinate work with utility company and install per utility company requirements.

4.3 Provide audible/visible ground fault protection for service disconnects (mains and sub-mains) greater than 1000 amps with 480V line voltage.

4.4 Service and distribution switchboards shall have full sized neutral and on-tapered bussing. All space shall be fully bussed for future use.

4.5 Service and distribution switchboards shall be provided with permanently attached, engraved named plates indicating, service name, ampicity, voltage, phases and wiring.

4.6 Contractor shall provide permanently attached, engraved, plates indicating S.E.S. and it's name, service main disconnects. All branch disconnects shall be labeled to indicate the name of load they feed.

4.7 Acceptable manufacturers are: General Electric, Square-D, Westinghouse, or engineer approved equal.

5.0 PANELBOARDS

5.1 Furnish and install branch circuit panelboards as specified herein and as indicated on the drawings. All bus bards shall be copper, located in the rear of the panelboard cabinet. Circuit breakers shall bolt-on type and individually removable without disturbing other circuit breakers. Acceptable manufacturers are General Electric, Westinghouse, Siemens, or Square D.

5.2 Minimum interrupting rating of circuit breakers shall be 10,000 amps unless noted otherwise on the drawings.

5.3 Verify mounting space prior to ordering. Panelboards shall be equal to Square-D designations shown on drawings.

5.4 Provide identification, labeling, and panelboard directories; as indicated in general requirements.

5.5 Panel boards shall be equipped with full neutral and ground busses. Separate isolated ground bus shall be provided for isolated ground panelboards. U.L. listed 200% rated neutral buses shall be provided when noted on the drawings.

5.6 All panel boards shall have hinged doors with lock. Locks for all panel boards shall be keyed alike.

5.7 Install panel boards straight and plumbed. Properly support and secure with centerline 5' above floor but top of panel board not to exceed 6' above floor.

5.8 All New circuit breakers for existing panel boards shall match the existing in manufacturer, type and A.I.C. rating unless noted otherwise on drawings.

5.9 Circuit breakers shall be switch rated and ambient compensated for all circuits. Provide switched neutrals on all circuit breakers feeding class 1 and class 2 areas. Provide GFCI for circuits with neutrals to devices above classified area. All lighting panels and circuit breakers shall be rated for continuous duty.

6.0 TRANSFORMERS : As noted on the drawings.

7.0 DISCONNECT SWITCHES AND STARTERS

7.1 Disconnect switches shall be heavy-duty, quick-make, quick-break, horsepower rated, NEMA 1 indoor, NEMA 3 gasketed NEMA 12 or NEMA 7 as applicable. Sized as shown on drawings, otherwise size equipment as recommended by NEC.

7.2 Manual motor starters with thermal overloads shall be provided for fractional horsepower motors 1/3 HP or greater.

7.3 Magnetic motor starters with thermal overloads (2) auxiliary contact switches. Internal line voltage to 24 volt transformer (250 KVA min) with proper primary/secondary protection, ambient compensated, red running light, hand-off-auto, across the line starters to 25HP will be provided with each motor as shown on the drawings (one horsepower to 25HP).

8.0 CONDUIT/RACEWAYS

8.1 All conductors shall be enclosed by conduit sized in accordance with the proper tables contained in the National Electric Code for the type of insulation used minimum 1/2" except for factory furnished lighting fixture flexible conduit may be 3/8".

8.1.1 Galvanized rigid conduit (GRC) and intermediate metal conduit (IMC) shall be utilized for above applications in accordance with Articles 345 and 346 of the National Electric Code. Further, rigid conduit and intermediate metal conduit shall be installed in all areas that are or may be subject to physical damage and for all conduit risers moving between floor levels. All couplings shall be threaded.

8.1.2 Rigid nonmetallic (PVC) Schedule 40 electrical conduit should be used for underground and under concrete slabe where permitted by NEC and local Electrical codes.

8.1.3 Electrical metallic tubing (EMT) shall be utilized for all dry, above grade or above floor applications in accordance with Article 384 of the National Electrical Code. Couplings and connectors shall be compression gland type made up wrench-tight. Set screw type are allowed subject to owner approval. Provide ground conductor for all runs of EMT conduit.

8.1.4 Flexible metal conduit shall be utilized for all connections to vibrating equpment such as motors and transformers (minimum of 2'-0" - maximum of 6'-0"), connections to lay-in type light fixtures or in remodel areas specifically noted for "fishing" in exisitng wall or non-accessible ceiling.

8.1.5 Surface metallic raceways shall be used in areas specifically noted and of size and type specified on the drawings. Point to match surface installations.

8.2 All exposed conduit (including conduit installed in ceiling plenums) shall be routed parallel or perpendicular with the building walls. Support conduit as required by the National Electrical Code.

8.3 Care in placement of concealed conduit shall be used to prevent excessive bunching of conduits which will affect the conductor ampacity.

8.4 Provide expansion type fittings for all conduits which cross expansion joints.

9.0 CONDUCTORS

9.1 Minimum size shall be #12 AWG except for control circuits which may be #14 AWG or signal circuits which shall be as indicated. All conductors shall be copper with the 90 degree C insulation types as indicated on the drawings or as specified below. It shall be the contractors responsibility to determine and increase the conductor size as necessary to limit branch circuit voltage drop to a maximum or 3" and feeder voltage drop to a maximum of 2%.

9.2 Conductor insulation shall be of type recognized by the National Electrical Code and as approved for its particular application or as required by the Local Building Safety Authorities, whichever is more stringent. Unless noted otherwise on the drawings. Type THHN/THWN shall be used for all conductors smaller than #4 AWG and type XHHW for all conductors sized #4 AWG and larger.

9.3 Splices and make-up joints for #8 and smaller conductors shall be equal pressure type solder less connectors (Buchanan, Scotchlok, Wing Nut or as approved). Splices or make-up joints #6 AWG and larger shall be made using approved solder less type pressure connectors (Burndy or approved) or hydraulic compression type barrel splices when specified on the drawings. All uninsulated type splices shall be insulated using approved heat or cold shrink covers followed by an a minimum of three-lapped layers of plastic electrical tape (Scotch #33+). In addition splices or joints in damp or wet locations shall further be covered y three-lapped layers of rubber tape. Feeders larger than #6 AWG shall not be spliced (installed in one continuous run) unless specifically noted or implied on the drawings.

9.4 All wiring throughout shall be color coded as follows:

	480 Volt System	208 Volt System
A Phase	Brown	Black
B Phase	Orange	Red
C Phase	Yellow	Blue
Neutral	Grey	White
Ground	Green	Green
Isolated Ground	----	Green with Yellow Stripes

10.0 OUTLETS

10.1 4" square or octagonal, zinc coated sheet steel boxes.

10.2 Provide 3/8" no-bolt fixture studs.

10.3 Provide plaster rings, covers and/or plates set to come flush with finish walls.

10.4 Utility or sectional switch boxes only where permitted.

11.0 DEVICES

11.1 All wiring devices shall be UL approved and of the type and number shown on the drawings. All new devices shall be 20 amp specification grade rated at 277V or 120V as necessary.

11.2 All devices shall be white color or as otherwise required by the architect or owner. It shall be the contractors responsibility to confirm all devices and plate colors with the architect or owner prior to purchase and installation.

11.2.1 Specification grade receptacles, Hubbell 5362 or equal by Leviton.

11.2.2 A.C. quiet operating type switches, Hubbell 2120 or equal by Leviton.

11.2.3 Isolated ground receptacles shall be identified for the purpose and shall be marked with and orange triangle per NEC 410-56(C).

11.3 Device plates shall be nylon or satin stainless steel , as manufactured by the device manufacturer.

11.4 Mount devices in accordance with the following schedule except where otherwise noted on the drawings:

11.4.1 Convenience receptacles with long axis vertical measure to center of outlet 18" A.F.F."

11.4.2 Light switches measure to top of box 48" A.F.F."

11.4.3 Telephone outlets measure to center of outlet 18" A.F.F."

12.0 LIGHT FIXTURES

12.1 Provide all new lighting fixtures complete with lamps, ballasts, reflectors, plaster frames, louvers stem hangers, etc., and as described on the drawings, and is required for a complete installation.

12.2 All ballasts shall be Class 'P', solid-state, 20% max, THD.

12.3 Exit signs and emergency lighting shall conform with local code requirements.

12.4 Mount all outlets at partition and height to clear ducts, etc.

12.5 All luminaries, lamps and lenses shall be thoroughly cleaned prior to final project acceptance. in addition all existing fixtures (if any) shall be relamped using new lamps to match the existing.

12.6 No portion of any light fixture mounted in a suspended grid type ceiling may be solely supported in any way by the ceiling grid or the wires or cables supporting the ceiling grid. All fixtures mounted in grid type ceiling shall be independently supported (suspended) at two (2) diagonal corners by wire, cable or other approved means within 6 inches of the corner.

13.0 MECHANICAL EQUIPMENT WIRING AND CONNECTION

13.1 Mechanical equipment motors and controls shall be furnished with mechanical equipment. Provide all disconnects, starters, combination starters, fuses, etc. as required by the local authorities or as required to provide complete and operational system.

13.2 Provide feeder circuits to mechanical equipment and make all connections.

13.3 Provide safety switches and/or thermal overload switches as required.

13.4 Provide all power (line voltage) wiring for mechanical equipment and make all connections except for temperature control equipment, which will be wired by Mechanical Contractor.

14.0 TELEPHONE AND DATA SYSTEM

14.1 Provide and install a complete system of empty raceway (with pull line) and service conduits. As required by the local telephone company or supplier. Provide required/requested information to telephone company prior to installation.

15.0 LOW VOLTAGE STYSTEM : See low voltage system drawing.

16.0 GROUNDING

16.1 Furnish and install grounding and grounding conductors as specified herein and as shown on the drawings.

16.2 All panelboard cabinets, equipment, enclosures, and conduit system shall be grounded securely in accordance with pertinent sections of Article 250 of NEC, as amended by any local codes. Conductors shall be copper. All electrically operated equipment shall be bonded to the grounded conduit system. All non-current carrying conductive surfaces that are lekely to become energized and subject to personal contact shall be grounded by one or more of the methods detailed in Article 250 NEC. All ground connections shall have clean contact surfaces. Install all grounding conductors in conduit and make connections readily accessible for inspection. Furnish and install grounding electrodes as described on the drawings.

16.3 Grounded of metal raceways shall be assured by means of grounding bushings on feeder conduit terminations at the service entrance, distribution switchboards and panelboards, and by means of a continuous, stranded, copper grounding wire extended from the ground bus in the enclosure to the conduit grounding bushings.

16.4 A separate insulated grounding conductor, sized per NEC 250-95, shall be installed in all raceway except rigid steel.

16.5 Provide separate, insulted, isolated grounding conductors for all isolated ground branch circuits or feeders.

17.0 CLEANUP OF PERMISES

17.1 Contractor shall at all times keep the permises clear of waste materials and debris caused by their employees and operation. Equipment not required in the work shall be removed prior to the termination of the contact.

18.0 TESTS AND INSPECTIONS

18.1 Contractor shall test wiring and devices as sections are completed and shall correct all defects immediately at their own expense, including any damage to walls, ceilings, floor or other portions of the building which may result from replacing defective equipment.

18.2 Furnish all meters, cable, connections and apparatus necessary for making tests.

18.3 Test system for shorts and grounds. Faulty wiring shall be removed and replaced. Any device, apparatus or fixture installed showing substandard performance shall be removed and replaced as directed by the Engineer.

18.4 Megger all systems neutrals to ensure the neutral isnot grounded within the system.

18.5 After the electrical wiring system installation is completed and at such time as the Architect/Engineer or his authorized representative may direct, the Contractor shall conduct an operating test for approval. Equipment shall be demonstrated to operate in accordance with requirements of specifications. Test shall be performed in presence of Architect or his representative.

19.0 LABELING

19.1 Labels shall be engraved, black on white melamine plastic laminate. 1/16" minimum thickness for signs up to 20 square inches or 8 inches long; 1/8" thick for larger sizes. Engraved legend shall be in white letters on black face with minimum 3/16" high letters. Labels shall be punched and fastened to equipment with aluminum rivets or self tapping stainless steel screws or number 10/32 stainless steel machine screws with nuts, flat and lock washers.

19.2 Label equipment with name, amperage, voltage, phase, and wires(i.e. Panel "A", 400A, 120/208, 3ø, 4W).

19.3 Equipment to be labeled shall include disconnects, contactors, and timeswitches. Labelother equipment as noted on plans.

20.0 WARRANTY

20.1 The Electrical Contractor shall warranty all materials, equipment, and workmanship furnished by him to be free from defect for a period of one year. Electrical contractor shall make all replacements and corrections to defective material, equipment, and workmanship in a timely fashion with no additional cost to the owner.

21.0 DRAWINGS OF RECORD

21.1 Record drawings shall be submitted in accordance with and if required by Division 1 - General Requirements.

DUTCH BROS COFFEE

CORALIC ARCHITECTURE

ARCHITECT
CORALIC, LLC
EDIN CORALIC
9700 MACKENZIE ROAD, STE 222
ST. LOUIS, MO 63123
p: 314.578.4953
edin@coralicarchitecture.com

STRUCTURAL ENGINEER
JAMES C. KREHER
JIM KREHER
208 N. MAIN STREET,
COLUMBIA, IL 62236
p: 618.281.8505
jimk@kreherengineering.com

MEP ENGINEER
Case Engineering
DARRELL R. CASE
796 MERUS CT.,
FENTON, MO 63026
T. 636.349.1600 F. 636.349.1730
dcase@caseengineeringinc.com

10.11.2021

STATE OF MISSOURI
DARRELL R. CASE
NUMBER PE-23303
PROFESSIONAL ENGINEER

Project No: MO0102
Dutch Bros Coffee - New Freestanding Store

500 NW Chipman Road. Lee's Summit, Missouri 64086
for: Dutch Bros Coffee
110 SW 4th St.
Grants Pass, OR 97526

ISSUED FOR PERMIT:
10.11.2021

REV:	DATE:	DESCRIPTION:

SHEET NAME:

SPECIFICATIONS

SHEET NUMBER:

E4.01

© 2020 DB Franchising USA, LLC

MECHANICAL SYMBOLS LEGEND

T	THERMOSTAT
S	TEMPERATURE SENSOR
SD	SMOKE DETECTOR
	FLEXIBLE DUCT
	VOLUME DAMPER
FD	FIRE DAMPER
	CEILING SUPPLY AIR DIFFUSER
	CEILING RETURN AIR GRILLE
	SIDEWALL AIR DIFFUSER OR GRILLE
	NEW DUCTWORK
	EXISTING DUCTWORK
D	CONDENSATE DRAIN
G	GAS PIPING
	PIPE TURNING DOWN
	PIPE TURNING UP
	BALL VALVE
	GATE VALVE
	CONNECTION OF NEW TO EXISTING
	CHECK VALVE
	GAS COCK
	UNION
	PRESSURE GAUGE
	STRAINER
AFF	ABOVE FINISHED FLOOR
S1 / 100	AIR DEVICE # / CFM — S – SUPPLY, R – RETURN, E – EXHAUST

MECHANICAL KEYED NOTES

1. 24 HR, 7 DAY PROGRAMMABLE THERMOSTAT TO BE INSTALLED 48" ABOVE THE FLOOR.
2. FURNISH AND INSTALL ROOFTOP UNIT (RTU–1,2) ON ROOF. ROUTE CONDENSATE PIPING TO NEAREST ROOF DRAIN, OR (WHERE REQUIRED BY LOCAL AHJ), THROUGH ROOF TO INDIRECTLY DRAIN ABOVE MOP SINK.
3. FURNISH AND INSTALL GALVANIZED STEEL DUCTWORK, SIZES AS SHOWN ON DRAWING. SIZES SHOWN ARE CLEAR, INSIDE DIMENSIONS. ALL DUCTWORK SHALL BE PROVIDED WITH MINIMUM R–6 INSULATION.
4. PROVIDE WALL–MOUNTED ELECTRIC AIR CURTAIN ABOVE DOOR/WINDOW. SEE ARCHITECTURAL DRAWINGS FOR ADDITIONAL INFORMATION.
5. 6"ø EXHAUST DUCT OUT THROUGH ROOF. MAINTAIN MINIMUM OF 10 FEET FROM ANY OUTSIDE ARE INTAKES.
6. INSTALL OWNER–PROVIDED WALK–IN COOLER CONDENSING UNIT ON ROOF. REFRIGERANT PIPING FROM COOLER TO REMOTE CONDENSER ON THE ROOF PROVIDED BY CONTRACTOR PER MANUFACTURER'S RECOMMENDATIONS. VERIFY EXACT ROUTING AND ROOF PENETRATION LOCATION IN FIELD.
7. INSTALL OWNER–PROVIDED ICE MAKER CONDENSING UNIT ON ROOF. REFRIGERANT PIPING FROM ICE MAKER TO REMOTE CONDENSER ON THE ROOF PROVIDED BY CONTRACTOR PER MANUFACTURER'S RECOMMENDATIONS. VERIFY EXACT ROUTING AND ROOF PENETRATION LOCATION IN FIELD.
8. UNDERCUT DOOR 1" FOR MAKEUP AIR.
9. FURNISH AND INSTALL REMOTE TEMPERATURE SENSOR AND RELATED WIRING TO CONNECT TO THERMOSTAT FOR HVAC UNIT. MOUNT ON WALL AT 60" AFF. VERIFY EXACT LOCATION IN FIELD.
10. FURNISH AND INSTALL REMOTE TEMPERATURE SENSOR AND RELATED WIRING TO CONNECT TO THERMOSTAT FOR HVAC UNIT. MOUNT IN RETURN DUCT OF UNIT AS SHOWN.

PACKAGED HVAC EQUIPMENT SCHEDULE

DESIGNATION	MFR.	TONNAGE	SEER	MODEL	TOTAL AIRFLOW (CFM)	O.A. TOTAL AIRFLOW	TOTAL COOLING CAPACITY	SENSIBLE COOLING CAPACITY	ELEC HEAT KW @ 208V	SUPPLY FAN BHP	MCA	MOCP	ELECTRIC SERVICE	WEIGHT
RTU–1,2	CARRIER	3	15.2	50HC–A04	1200	190	35.6	26.3	12.0 KW	1.0	51	60	208/3/60	650

NOTES:
1. FURNISH AND INSTALL NEW ROOFTOP UNIT AND MANUFACTURER–APPROVED 14" ROOF CURB.
2. PROVIDE UNIT WITH ECONOMIZER WITH FAULT DETECTION & DIAGNOSTICS, BAROMETRIC RELIEF DAMPER, AND THROWAWAY FILTERS. ECONOMIZER AND OUTSIDE AIR DAMPERS SHALL HAVE MOTORIZED DAMPERS THAT COMPLY WITH IECC REQUIREMENTS.
3. VERIFY ELECTRICAL REQUIREMENTS WITH ELECTRICAL CONTRACTOR PRIOR TO ORDERING EQUIPMENT.

VENTILATION FAN SCHEDULE

DESIGNATION	EF–1
APPLICATION	BATHROOM EXHAUST
MANUFACTURER	COOK
MODEL	GC–148
AIR FLOW (CFM)	75
STATIC PRESSURE	0.4
MOTOR (HP OR WATTS)	29W
WEIGHT	12
MCA	–
CONTROL NOTES	NOTES: PROVIDE SPEED CONTROL SWITCH AND MECHANICALLY ACTUATED, LOW LEAK DAMPER

ASHRAE 62.1 O.A. CALCULATIONS

AREA	OCCUPANCY	CFM/PERSON	SUBTOTAL	SQUARE FEET	CFM/SQFT	SUBTOTAL	TOTAL CFM	PROVIDED BY
PRODUCTION	9	7.5	67.50	595	0.18	107.1	174.6	RTU–1,2

AIR BALANCE SCHEDULE

EXHAUST UNIT	EXHAUST AIR FLOW (CFM)	PROVIDED BY	O.A. FLOW (CFM)
*EF–1	75	RTU–1	190
–	–	RTU–2	190
TOTAL EXHAUST	75	TOTAL O.A.	380

* FAN TO OPERATE ON AN INTERMITTENT BASIS.

AIR DEVICE SCHEDULE

SYMBOL	S1	S2	R1
DUCT SIZE	10"ø	6"ø	16"ø
BOOT SIZE	10"ø	6"ø	22"x22"
FACE SIZE	24"x24"	12"x12"	24"x24"
DESIGN MFG.	TITUS	TITUS	TITUS
MODEL NO	TMS	TMS	350RL
FINISH	WHITE	WHITE	WHITE

AIR CURTAIN SCHEDULE

DESIGNATION	AC–1,2	AC–3	A–4
LENGTH	25"	42"	48"
MANUFACTURER	QUIKSERV	QUIKSERV	QUIKSERV
MODEL	QSK1025AA–BK	SAN. CERT LOW–PROFILE 7	SAN. CERT LOW–PROFILE 7
VOLTAGE	120/1ø	120/1ø	120/1ø
AMPS	3.4	3.4	3.4
ACCESSORIES	PROVIDE ALL MANUFACTURER–RECOMMENDED ACCESSORIES FOR A COMPLETE OPERATIONAL SYSTEM. VERIFY EXACT SPECIFICATION WITH OWNER PRIOR TO ORDERING.	PROVIDE ALL MANUFACTURER–RECOMMENDED ACCESSORIES FOR A COMPLETE OPERATIONAL SYSTEM. VERIFY EXACT SPECIFICATION WITH OWNER PRIOR TO ORDERING.	PROVIDE ALL MANUFACTURER–RECOMMENDED ACCESSORIES FOR A COMPLETE OPERATIONAL SYSTEM. VERIFY EXACT SPECIFICATION WITH OWNER PRIOR TO ORDERING.

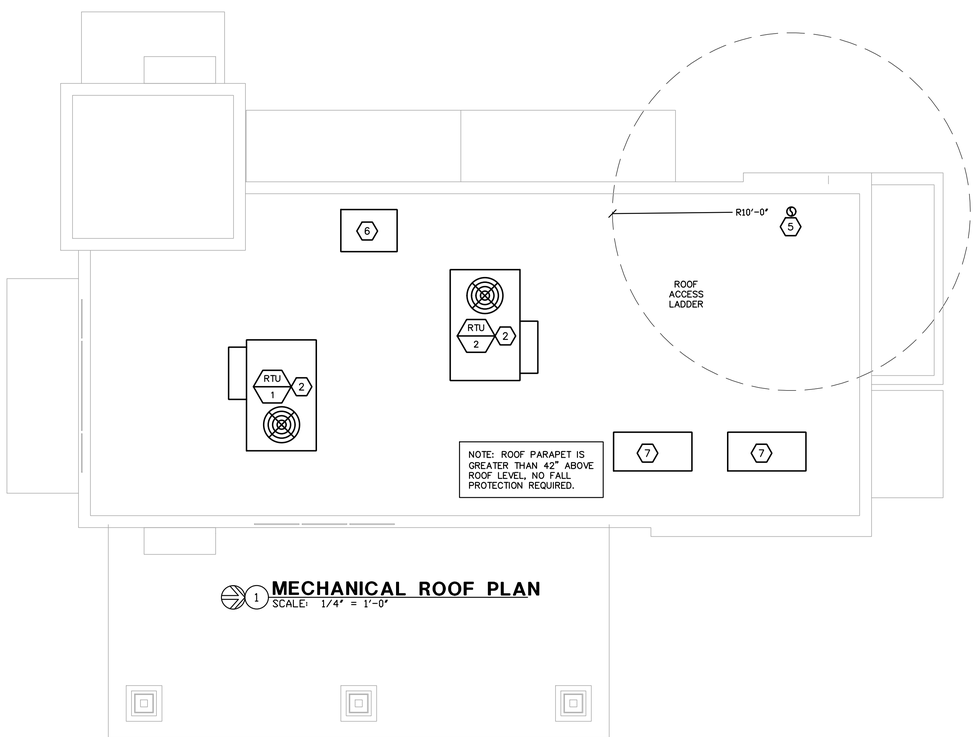

1 MECHANICAL ROOF PLAN
SCALE: 1/4" = 1'–0"

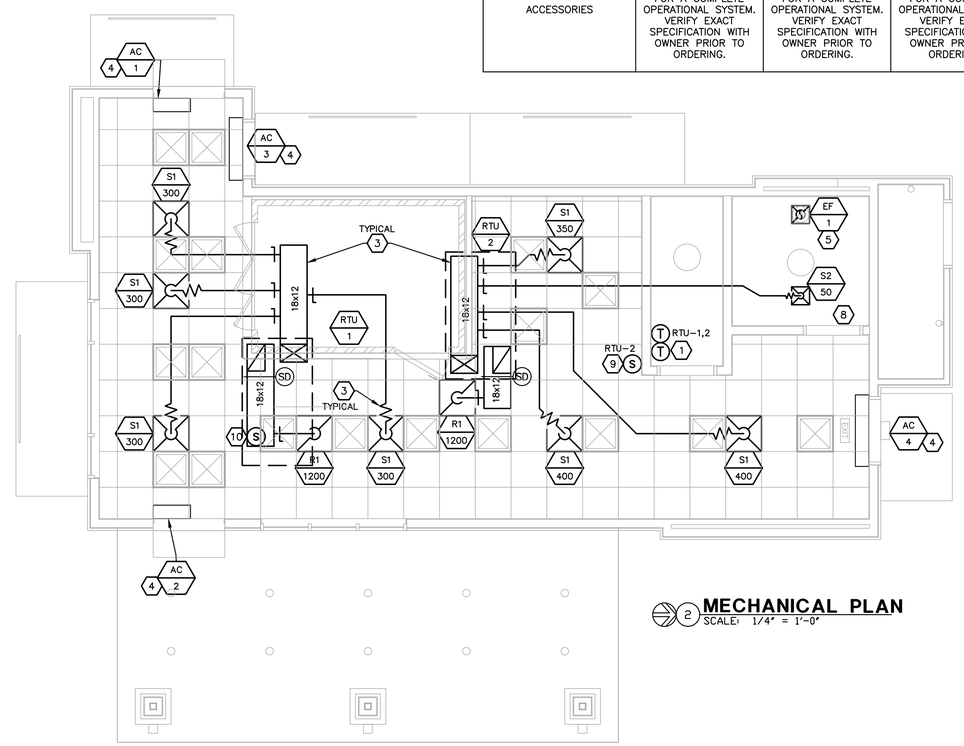

2 MECHANICAL PLAN
SCALE: 1/4" = 1'–0"

ARCHITECT
CORALIC, LLC
EDIN CORALIC
9700 MACKENZIE ROAD, STE 222
ST. LOUIS, MO 63123
p: 314.578.4953
edin@coralicarchitecture.com

STRUCTURAL ENGINEER
JAMES C. KREHER
JIM KREHER
208 N. MAIN STREET,
COLUMBIA, IL 62236
p: 618.281.8505
jimk@kreherengineering.com

MEP ENGINEER
Case Engineering
DARRELL R. CASE
796 MERUS CT.,
FENTON, MO 63026
T. 636.349.1600 F. 636.349.1730
dcase@caseengineeringinc.com

10.11.2021

STATE OF MISSOURI — DARRELL R. CASE — NUMBER PE-23303 — PROFESSIONAL ENGINEER

Project No: MO0102

Dutch Bros Coffee - New Freestanding Store

500 NW Chipman Road, Lee's Summit, Missouri 64086
for: Dutch Bros Coffee
110 SW 4th St.
Grants Pass, OR 97526

ISSUED FOR PERMIT:
10.11.2021

REV:	DATE:	DESCRIPTION:

SHEET NAME:
MECHANICAL PLAN

SHEET NUMBER:
M1.0

© 2020 DB Franchising USA, LLC

CONTRACTORS NOTES:

HVAC CONTRACTOR

1. HVAC CONTRACTOR SHALL FURNISH AND INSTALL ROOF–TOP UNITS (IF REQUIRED), EXHAUST FAN, DUCTWORK, INSULATION WRAP, DIFFUSERS, SMOKE DETECTORS, OCCUPIED/UNOCCUPIED PANEL, AND TEMPERATURE CONTROLS.
2. THE HVAC CONTRACTOR SHALL VERIFY LOCATIONS FOR ALL HVAC EQUIPMENT ON SITE FROM MOST–RECENT KITCHEN EQUIPMENT PLANS. ALL FANS ARE TO BE UL LISTED.
3. ALL HVAC EQUIPMENT CURBS/ADAPTERS (AS REQUIRED) SHALL BE SUPPLIED BY HVAC CONTRACTOR.
4. SHIMS SHALL BE PROVIDED BY HVAC CONTRACTOR BETWEEN THE ROOF DECK AND THE CURB TO COMPENSATE FOR ROOF PITCH.
5. ALL FLEX DUCT SHALL BE U.L. LISTED, R–6, FOIL–BACKED, CLASSIFIED AS A CLASS 1 AIR DUCT. MAXIMUM LENGTH IS TO BE 12' – 0" PER DROP OR PER LOCAL CODE.
6. ALL METAL DUCT AND AIR DISTRIBUTION DEVICES SHALL BE INSULATED WITH R–6, 2" X .75 DENSITY FOIL–BACKED INSULATION, WITH FIRE AND SMOKE RATING [25]–[50].
7. ALL DUCTWORK TO BE INDEPENDENTLY HUNG FROM STRUCTURAL MEMBERS.
8. ALL DUCTWORK SHALL BE FABRICATED, INSTALLED, SEALED, AND EXTERNALLY INSULATED PER SMACNA LOW–VELOCITY DUCT MANUAL (LATEST ISSUE). INTERNALLY INSULATED DUCT IS NOT PERMITTED.
9. UNLESS OTHERWISE NOTED, ALL SUPPLY TAKEOFFS SHALL HAVE A MANUAL VOLUME CONTROL DAMPER.
10. THE HVAC CONTRACTOR SHALL COORDINATE DIFFUSER LOCATIONS ON SITE WITH THE MOST RECENT REFLECTED CEILING PLAN.
11. THE HVAC CONTRACTOR SHALL FURNISH A WRITTEN GUARANTEE COVERING A ONE–YEAR PERIOD FOR ALL EQUIPMENT AND AN ADDITIONAL FOUR–YEAR PERIOD FOR THE COMPRESSORS IN THE RTUS. ALL FANS TO BE U.L. LISTED.
12. UPON COMPLETION OF PROJECT THE HVAC CONTRACTOR IS TO HIRE AN AABC OR NEBB CERTIFIED, INDEPENDENT TEST & BALANCE COMPANY TO CONDUCT A COMPLETE, CERTIFIED TEST AND BALANCE OF ALL HVAC EQUIPMENT. PROVIDE A WRITTEN REPORT TO NCA CONSULTANTS. ALL CAPACITIES MUST BE SET TO AMOUNT INDICATED ON THE FLOOR PLANS AND SCHEDULES.
13. THE HVAC CONTRACTOR IS TO MAKE ALL LOW–VOLTAGE WIRING FINAL CONNECTIONS FOR ALL HVAC EQUIPMENT INCLUDING TEMPERATURE CONTROLS, RTUS, AND SMOKE DETECTORS.

GENERAL CONTRACTOR

1. IT IS THE RESPONSIBILITY OF THE GENERAL CONTRACTOR TO RECEIVE, OFFLOAD, AND STORE ALL HVAC MATERIALS WHICH ARRIVE AT THE JOB SITE. ALL MATERIAL MUST BE STORED INSIDE THE BUILDING.
2. RTU ROOF OPENING SIZES AND ROOF CURBS ARE BASED ON EQUIPMENT SHOWN. IF OTHER EQUIPMENT IS USED, VERIFY ROOF OPENING REQUIREMENTS. MAKE PENETRATIONS AS NEEDED FOR INSTALLATION OF NEW CURB AND EQUIPMENT. COORDINATE ON SITE WITH HVAC CONTRACTOR. ENSURE THAT ROOFING MATERIAL DOES NOT COVER THE TOP OF ANY HVAC EQUIPMENT CURB.
3. ALL ROOF, CEILING, WALL, AND STRUCTURAL FRAMING FOR UNIT, FAN, DUCT, DIFFUSER, AND ALL OTHER HVAC WORK SHALL BE BY THE G.C. COORDINATE ON SITE WITH HVAC CONTRACTOR. GENERAL CONTRACTOR IS TO PROVIDE ANY SCREENING, GUARD RAILS, ETC. FOR ROOF–MOUNTED HVAC EQUIPMENT PER LOCAL ADOPTED CODES. ANY REQUIRED PAINTING OF HVAC WORK IS TO BE BY THE GENERAL CONTRACTOR.
4. IF NECESSARY, THE GENERAL CONTRACTOR IS TO REMOVE, REPLACE, AND/OR REPAIR CEILING GRID AND TILES IN ORDER FOR THE HVAC WORK TO BE PERFORMED..

ELECTRICAL CONTRACTOR

1. THE ELECTRICAL CONTRACTOR SHALL FURNISH AND INSTALL PITCH POCKETS FOR POWER AND CONTROL WIRING, AND IS TO MAINTAIN 12" MINIMUM CLEARANCE FROM BACK PANEL OF AIR CONDITIONING UNITS. DO NOT PENETRATE BOTTOM OF RTU CURB.
2. THE ELECTRICAL CONTRACTOR SHALL INSTALL LOW–VOLTAGE CONTROL WIRING FOR ALL AIR CONDITIONING CONTROLS.
3. THE ELECTRICAL CONTRACTOR SHALL FURNISH AND INSTALL DISCONNECTS FOR RTUS AND INTERLOCK RESTROOM FAN TO RUN CONTINUOUSLY WHILE WORK AREA LIGHTS ARE ON.
4. FOR EACH AIR CONDITIONING UNIT, THE ELECTRICAL CONTRACTOR IS TO PROVIDE ONE SINGLE–GANG RECEPTACLE TEST STATION FOR THE REMOTE SENSOR AND/OR T–STAT, AND ONE DOUBLE–GANG RECEPTACLE REST STATION FOR THE ANNUNCIATOR, WITH GREEN AND RED LIGHT INDICATORS. THE FIRE AND MECHANICAL INSPECTORS WILL DETERMINE SUITABLE LOCATION FOR TEST STATIONS. ANNUNCIATORS AND TEST STATION WILL BE LOOPED IN THE CIRCUITRY OF THE SMOKE DETECTION DEVICES. WIRING WILL BE INSTALLED BY ELECTRICAL CONTRACTOR.

PLUMBING CONTRACTOR

1. THE PLUMBING CONTRACTOR TO PROVIDE AND INSTALL CONDENSATE DRAINS/GAS PIPING FOR ALL A/C UNITS, AND PITCH POCKETS FOR RTU CONNECTIONS. DO NOT PENETRATE BOTTOM OF RTU CURB.
2. THE PLUMBING CONTRACTOR IS TO COORDINATE PLUMBING VENT STACKS AND WATER HEATER FLUES WITH OUTSIDE AIR INTAKES OF A/C UNITS. 10'–0" MINIMUM CLEARANCE REQUIRED OR PER LOCAL CODE.
3. THE PLUMBING CONTRACTOR SHALL PROVIDE AND INSTALL FLUE GAS EXHAUST VENT FOR WATER HEATER. MAINTAIN 10'–0" MINIMUM CLEARANCE TO AIR INTAKES, OR PER LOCAL CODE. COORDINATE ON SITE WITH G.C. AND HVAC CONTRACTOR.

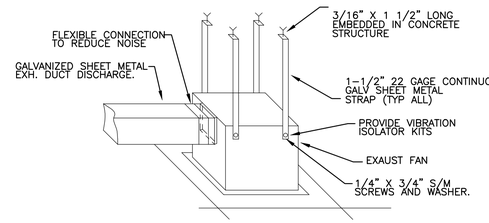

BATHROOM FAN INSTALLATION DETAIL

NOT TO SCALE

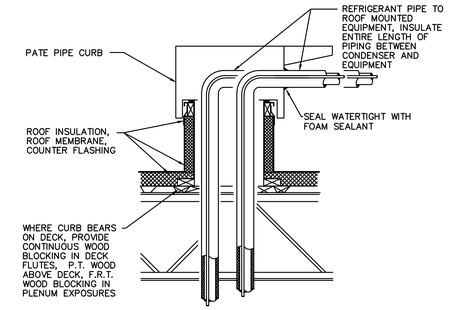

REFRIGERANT PIPING DETAIL

NOT TO SCALE

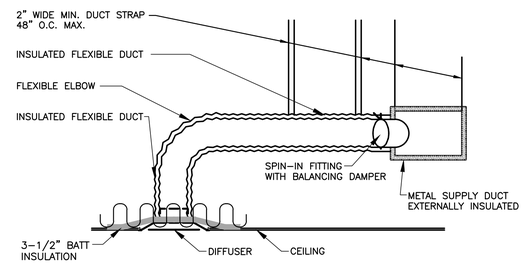

* REFER TO THE MECHANICAL EQUIPMENT SCHEDULE FOR COMPONENT AND DEVICE SPECIFICATIONS.

HVAC DUCTWORK DETAIL

NOT TO SCALE

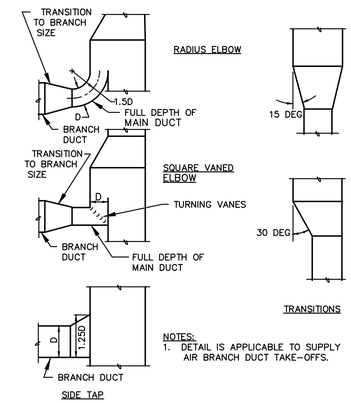

NOTES:
1. DETAIL IS APPLICABLE TO SUPPLY AIR BRANCH DUCT TAKE–OFFS.

BRANCH DUCT TAKEOFFS

NOT TO SCALE

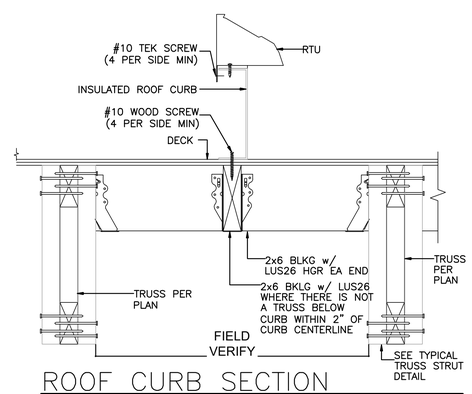

ROOF CURB SECTION

NOT TO SCALE

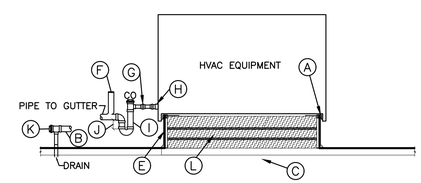

NOTES:

- (A) OMIT COUNTER FLASHING FOR EQUIPMENT WITH BUILT–IN COUNTER FLASHING.
- (B) PITCH DOWN TOWARD DRAIN, MIN. 1/8" PER ft.
- (C) SUPPLY & RETURN DUCTS WITH INSULATED LINING AND FLEXIBLE CONNECTIONS.
- (D) 3 LAYERS EXTERIOR DRYWALL AND INSULATION FOR SOUND ATTENUATION.
- (E) FACTORY CURB BY HVAC.
- (F) OPEN TO ATMOSPHERE.
- (G) UNION
- (H) DRAIN LINE SHALL BE AT LEAST THE SAME SIZE AS THE NIPPLE ON THE DRAIN PAN.
- (I) CONDENSATE DRAIN TRAP WITH SUFFICIENT TRAP SEAL TO OFFSET PRESSURE AT DRAIN PAN.
- (J) T.S.P. OF FAN PLUS 1" OF WATER.
- (K) C.O. AT EVERY CHANGE IN DIRECTION GREATER THAN 45° AND AT MAX OF 50 INTERVALS
- (L) 2" LAYER OF 6" INSULATION ALTERNATE WITH 1/2 MIN DRYWALL TO FILL ALL CURB VOID.

RTU CURB AND PIPING DETAIL

NOT TO SCALE

ARCHITECT
CORALIC, LLC
EDIN CORALIC
9700 MACKENZIE ROAD, STE 222
ST. LOUIS, MO 63123
p: 314.578.4953
edin@coralicarchitecture.com

STRUCTURAL ENGINEER
JAMES C. KREHER
JIM KREHER
208 N. MAIN STREET,
COLUMBIA, IL 62236
p: 618.281.8505
jimk@kreherengineering.com

MEP ENGINEER
Case Engineering
DARRELL R. CASE
796 MERUS CT.,
FENTON, MO 63026
T. 636.349.1600 F. 636.349.1730
dcase@caseengineeringinc.com

10.11.2021

STATE OF MISSOURI — DARRELL R. CASE — NUMBER PE-23303 — PROFESSIONAL ENGINEER

Project No: MO0102

Dutch Bros Coffee - New Freestanding Store

500 NW Chipman Road, Lee's Summit, Missouri 64086
for: Dutch Bros Coffee
110 SW 4th St.
Grants Pass, OR 97526

ISSUED FOR PERMIT:
10.11.2021

REV:	DATE:	DESCRIPTION:

SHEET NAME:

MECHANICAL DETAILS

SHEET NUMBER:

M2.0

©2020 DB Franchising USA, LLC

MECHANICAL SPECIFICATIONS

WORK INCLUDED –
ALL LABOR, MATERIALS AND EQUIPMENT NECESSARY FOR THE INSTALLATION OF AN OPERATING HVAC SYSTEM INCLUDING HVAC EQUIPMENT, DUCTWORK, GRILLES, REGISTERS, CONTROL AND RELATED ITEMS AS REQUIRED OR SPECIFIED. OBTAIN AND PAY FOR BUILDING PERMITS, FEES, TESTS, AND INSPECTIONS REQUIRED IN CONNECTION WITH WORK. ALL WORK AND MATERIALS SHALL BE IN FULL ACCORDANCE WITH ALL GOVERNING CODES AND ORDINANCES. THE FINAL PRODUCT SHALL BE A COMPLETE WORKING SYSTEM.

GENERAL –
ALL HVAC EQUIPMENT AND ACCESSORIES SHALL BE INSTALLED AS PER MANUFACTURER'S INSTALLATION INSTRUCTIONS. THE DRAWINGS ARE GENERALLY DIAGRAMMATIC, AND ARE INTENDED TO CONVEY SCOPE OF WORK AND TO INDICATE GENERAL ARRANGEMENT OF EQUIPMENT, DUCTS AND PIPING. THEY ARE NOT INTENDED TO SHOW EVERY OFFSET OR FITTINGS OR STRUCTURAL DIFFICULTY THAT MAY BE ENCOUNTERED DURING INSTALLATION OF WORK. DO NOT SCALE DRAWINGS. THE LOCATION OF ALL DUCTWORK, EQUIPMENT AND RELATED ITEMS SHALL BE VERIFIED IN THE FIELD PRIOR TO FABRICATION. THE EQUIPMENT AND DUCTWORK/DIFFUSER LOCATIONS AS SHOWN ARE ACCURATE TO THE BEST OF OUR KNOWLEDGE. HOWEVER, IN SOME INSTANCES, THE EQUIPMENT ITEM MAY VARY FROM WHAT IS SHOWN. VERIFY ALL CRITICAL DIMENSIONS AND ROUGH–IN REQUIREMENTS WITH THE EQUIPMENT SUPPLIER PRIOR TO CONSTRUCTION. FAILURE OF THE CONTRACTOR TO VERIFY THESE DIMENSIONS SHALL PLACE THE RESPONSIBILITY FOR ANY SUBSEQUENT RELOCATION'S DIRECTLY UPON THE CONTRACTOR.

SUBSTITUTIONS –
IF THE CONTRACTOR DESIRES TO USE EQUIPMENT AND/OR MATERIAL OF EQUAL QUALITY OTHER THAN THAT SPECIFIED, HE SHALL HAVE REQUESTED, IN WRITING, APPROVAL OF EACH SUCH SUBSTITUTION AND RECEIVED APPROVAL PROR TO BID OPENING. A CONTRACTOR OFFERING A SUBSTITUTION SHALL ACCEPT RESPONSIBILITY FOR ITS EFFECT ON THE WORK OF ALL TRADES. THE CONTRACTOR WHO REQUESTED SUCH SUBSTITUTION SHALL PAY ALL COST AND CHANGES RESULTING FROM THE INCLUSION OF SUBSTITUTIONS.

DISCREPANCIES – IN THE EVENT THAT THE CONTRACTOR FINDS DISCREPANCIES OR OMISSIONS, OR IS IN DOUBT AS TO THE EXACT MEANING OF THE PLANS AND/OR SPECIFICATIONS, HE SHALL, BEFORE COMMENCING WORK, CONTACT THE ARCHITECT FOR CLARIFICATION.

FIRE/DRAFT STOP SURVEY –
THE CONTRACTOR SHALL REVIEW THE ARCHITECTURAL DRAWINGS TO VERIFY THE LOCATION OF ALL FIRE AND/OR DRAFT BARRIERS IN THIS PROJECT PRIOR TO CONSTRUCTION. PROVIDE UL AND LOCAL CODE APPROVED FIRE/SMOKE DAMPERS AND MECHANICAL PIPING PENETRATION, CONSTRUCTION MATERIALS AND INSTALLATION METHODS FOR BARRIER RATING ENCOUNTERED. INCLUDE RATED ACCESS PANELS FOR EACH DAMPER. FAILURE OF THE CONTRACTOR TO VERIFY REQUIRED FIRE/DRAFT BARRIER REQUIREMENTS PRIOR TO BIDDING THESE DOCUMENTS SHALL PLACE THE RESPONSIBILITY FOR ANY SUBSEQUENT RELOCATIONS OR REVISIONS DIRECTLY ON THE CONTRACTOR.

ACCEPTABLE MANUFACTURERS –
THE FOLLOWING IS A LIST OF MANUFACTURERS WHOSE EQUIPMENT AND HVAC MATERIALS ARE ACCEPTABLE, SUBJECT TO CONFORMANCE WITH CONTRACT DOCUMENTS. VERIFY THAT THE EQUIPMENT WILL MEET ALL CAPACITIES, SPACE ALLOCATIONS, AND THAT THE WEIGHTS WILL NOT EXCEED STRUCTURAL DESIGN LOADS.
HVAC EQUIPMENT: TRANE, CARRIER, PAYNE, YORK, DAY & NIGHT, LENNOX,RUUD AND ICP COMMERCIAL
DUCT & PIPE INSTALLATION: KNAUF, OWENS–CORNING, MANVILLE, CERTAIN–TEED AND PPG
EVAPORATE COOLERS: ARVIN, GOETTL MASTER COOL, UNITED METAL PRODUCTS
MAKE–UP AIR UNITS: ARIES, REZNOR, WESTERN AND STERLING
HVAC CONTROLS: HONEYWELL, BARBER–COLMAN, ROBERTSHAW, OR HVAC EQUIPMENT SUPPLIER FURNISHED
GRILLES, REGISTERS, DIFFUSERS & LOUVERS: ANEMOSTAT, KRUEGER, METAL–AIRE, TITUS, RUSKIN AND PENN
ACCESS DOORS: MILCOR, VENTGAB AND POTTER–ROEMER
FLEXIBLE DUCT: GENFLEX, THERMAFLEX, OR EQUIVALENT
EXHAUST FANS: GREENHECK, ACME, ILG, LOREN COOK, PENN AND BROAN
SMOKE & FIRE DAMPERS: RUSKIN, PHILLIPS AND AIR BALANCE

AIR CONDITIONING UNITS –
SELF CONTAINED OR SPLIT SYSTEM: ELECTRIC/HEAT PUMP AIR CONDITIONING AND ELECTRIC RESISTANCE OR GAS HEATING SECTION. TYPE, CAPABILITIES AND RATING INDICATED ON THE DRAWINGS, ARI, AND/OR AGA CERTIFIED, UL LISTED. INCLUDE FACTORY ACCESSORIES NECESSARY TO MAKE EQUIPMENT COMPLETELY OPERATIONAL.

EVAPORATIVE COOLER UNITS –
FURNISH AND INSTALL EVAPORATIVE COOLERS. EACH UNIT SHALL BE COMPLETE WITH BLOWER AND MOTOR WITH STARTERS. PROVIDE SNAP LOCK PAD FRAMES. UNDERCOATING OF RESERVOIR, STRAINER BASKET, FLOAT KIT, WATER CONNECTION KIT, "AQUATROL" BLEED CONTROL PUMP. MODELS AND CAPACITIES AS INDICATED ON DRAWINGS, APPROVED UNITS SHALL BE CERTIFIED FOR AIR DELIVERY OR BE INCREASED IN SIZE TO MEET DESIGN STANDARDS, INCLUDE FACTORY ACCESSORIES NECESSARY TO MAKE EQUIPMENT COMPLETELY OPERATIONAL. COOLER SHALL BE CONNECTED TO A SYSTEM OF DRAINAGE TO FACILITATE THE DRAINING OF COOLER AND THE BLEED–OFF LINES. LINES SHALL BE TYPE "M" COPPER. TERMINATE DRAINAGE LINES AS INDICATED ON DRAWINGS. EVAPORATIVE COOLING EQUIPMENT SHALL BE U.L. LISTED AND MUST HAVE A PERMANENTLY ATTACHED LABEL.

HVAC EQUIPMENT DRAINS –
TO BE INSTALLED AS INDICATED OR REQUIRED. USE TYPE "M" COPPER TUBING AND WROUGHT COPPER MECHANICAL FITTINGS. EXTEND DRAINS TO NEAREST CODE APPROVED RECEPTOR, LAVATORY TAILPIECE (FURNISHED BY PLUMBER) OR DRAIN OUTSIDE IN PLANTER AREA. SLOPE DRAIN AT A MINIMUM OF 1/8" PER FT.
NOTE: INSULATE ALL CONDENSATE DRAIN LINES ABOVE CEILING.
NOTE: CONTRACTOR OPTION TO USE PVC WITH OWNERS APPROVAL. SCHEDULE 40 PVC ACCEPTABLE WHERE CONCEALED WITHIN STRUCTURE.
NO PVC PIPING ABOVE ROOF OR AT EXTERIOR OF BUILDING.

TEMPERATURE CONTROL SYSTEM –
AS INDICATED OR REQUIRED. PROVIDE THERMOSTAT AND SUB BASE, WITH HINGED AND LOCKABLE OPAQUE COVER(PUBLIC AREAS ONLY). CONTROLS SHALL BE FURNISHED AS RECOMMENDED BY HVAC EQUIPMENT SUPPLIER, SUITABLE FOR APPLICATION, UNLESS OTHERWISE INDICATED ON THE DRAWINGS. CONTRACTOR TO COORDINATE EXACT LOCATION AND MOUNTING HEIGHT WITH THE ARCHITECT/OWNER.
NOTE: CONTRACTOR TO PROVIDE PROGRAMMABLE THERMOSTAT.
NOTE: THERMOSTAT TO COMPLY WITH REQUIREMENTS OF 2018 IECC, SECTION 406.2.4, HVAC SYSTEM CONTROLS.

EXHAUST FANS –
SIZE, CAPACITIES, AND TYPE AS INDICATED ON THE DRAWINGS. FURNISH COMPLETE WITH FACTORY CURBS/ROOF CAPS,BAROMETRIC DAMPER, SPEED CONTROL, DISCONNECT, STARTER (IF REQUIRED) AND BIRDSCREEN. FURNISH ROOF MOUNTED FANS WITH INSULATED ROOF CURB. PROVIDE CEILING MOUNTED FANS WITH WALL/ROOF CAP.
NOTE: ALL EXHAUST SYSTEMS MUST HAVE DAMPERS THAT ARE AUTOMATICALLY CLOSED WHILE THE EQUIPMENT IS NOT OPERATING.

GRILLES, DIFFUSERS AND REGISTERS –
SIZE, CAPACITIES, AND TYPE AS INDICATED ON THE DRAWINGS. INSTALL IN ACCORDANCE WITH MANUFACTURER'S INSTALLATION INSTRUCTIONS. PROVIDE ALUMINUM TYPE FOR EVAPORATIVE COOLERS AND AREAS SUBJECT TO MOISTURE. PROVIDE EXTRACTORS BEHIND ALL SUPPLY REGISTERS.
NOTE: EACH SUPPLY AIR OUTLET OR DIFFUSER MUST HAVE ITS OWN BALANCING DEVICE. ACCEPTABLE BALANCING DEVICES INCLUDE ADJUSTABLE DAMPERS LOCATED WITHIN THE DUCTWORK, TERMINAL DEVICES AND SUPPLY AIR DIFFUSERS. EACH BALANCING DEVICE OR OTHER MEANS OF SUPPLY AIR ADJUSTMENT USED IN BALANCING SHALL BE PROVIDED WITH ACCESS.

DUCTWORK –
ALL DUCTWORK INSTALLATIONS MUST CONFORM TO REQUIREMENTS OF THE LATEST EDITION OF THE 2018 INTERNATIONAL MECHANICAL CODE. ALL LOW PRESSURE HEATING AND AIR CONDITIONING DUCTWORK SHALL BE FABRICATED FROM LOCK FORMING PRIME GRADE GALVANIZED STEEL SHEETS (MAKE–UP AIR DUCTWORK CONVEYING EVAPORATIVE COOLED AIR SHALL BE FABRICATED FROM ALUMINUM SHEETS), AND INSTALLED BY SKILLED MECHANICS IN STRICT CONFORMANCE WITH THE LATEST SMACNA MANUAL. CROSS BREAK ALL SIDES OF DUCTS. SUPPORT ALL DUCTWORK FROM OVERHEAD STRUCTURE WITH STRAP IRON OR ANGLES. ALL DUCT DIMENSIONS ARE NET FREE AREA AND DO NOT INCLUDE ALLOWANCE FOR INSULATION. ALL JOINTS, LONGITUDINAL AND TRANSVERSE SEAMS, AND CONNECTIONS IN DUCTWORK MUST BE SECURELY SEALED USING WELDMENTS, MECHANICAL FASTENERS WITH SEALS, GASKETS, OR MASTICS, MESH AND MASTIC SEALING SYSTEMS, OR TAPES. TAPES AND MASTICS MUST BE LISTED AND LABELED IN ACCORDANCE WITH U.L. 181A OR U.L. 181B.

HORIZONTAL AND VERTICAL DUCT SUPPORTERS –
REFER TO 2018 IMC, SECTION 603.10 FOR DUCT SUPPORTS.

DUCTWORK FABRICATION –
PROVIDE CONNECTIONS BETWEEN EQUIPMENT AND DUCTWORK (DURODYNE "GRIP LOCK" OR EQUAL). PROVIDE SHEET METAL SHIELDED OVER EXPOSED JOINTS. COVER ALL JOINTS, SEAMS AND LOCKS ON INTERIOR AND EXTERIOR DUCTWORK WITH 4 OZ. CANVAS SATURATED WITH VINYL ACRYLIC DUCT SEALANT (UL LISTED, FLAME SPREAD 0) TO MAKE AIR TIGHT. WHERE DUCTS PASS THROUGH THE WALLS OR ROOF, FLASH AND COUNTER FLASH TO LEAVE WATERTIGHT INSTALLATION. PAINT ALL EXPOSED DUCTWORK TO MATCH SURROUNDING CONSTRUCTION OR AS RECOMMENDED BY ARCHITECT. PROVIDE AIRFOIL TURNING VANES ON ALL RIGHT ANGLE ELBOWS. PROVIDE VOLUME AND SPUTTER DAMPERS WHERE SHOWN ON DRAWINGS AND AS REQUIRED. FLEXIBLE DUCTWORK SHALL BE OF FLEXIBLE WIRE REINFORCED FIBERGLASS DUCT (TYPE UL, CLASS 1), AND NYLON LINER AND COVER, CONNECTORS TO BE UL APPROVED. FLEXIBLE DUCTWORK SHALL BE LIMITED TO RUN–OUTS TO DIFFUSERS OF (5) FIVE FT. OR LESS, SUPPORTED WITH STRAP HANGERS.

DUCTWORK INSULATION –
ALL ACOUSTIC LINER TO BE MINIMUM 1.5 PCF DENSITY, WITH NFPA 90A APPROVED LINER OR COATING. THERMAL INSULATION SHALL BE MINIMUM 3/4 PCF DENSITY, WITH A MAXIMUM "K" FACTOR OF 0.30 AT 75° F AND SHALL HAVE A FLAME RETARDANT FOIL–SKIMKRAFT VAPOR BARRIER (FSK), FASTENED TO DUCTWORK WITH 16 GA. WIRE @ 12" O.C. ALL INSULATION SHALL HAVE A FLAME SPREAD RATING OF 25 OR LESS, AND A SMOKE DEVELOPED RATING OF 50 OR LESS. EXTERIOR HVAC DUCTWORK TO BE LINED WITH 2" DUCT LINER 1–1/2" PCF, K=0.28 AT 75° F, R=8.

INTERIOR DUCTWORK BELOW CEILING INSULATION TO BE LINED WITH 1" DUCT LINER 1–1/2" PCF, K=0.28 AT 75° F, R=8 (MIN.), OR WRAP WITH 1–1/2" FIBERGLASS DUCT WRAP, 3/4 PCF, K=0.31 AT 75° F, R=5 (MIN.) AND FLAME RETARDANT FOIL–SKIMKRAFT VAPOR BARRIER (SKF). INTERIOR SHEET METAL DUCTWORK ABOVE CEILING INSULATION TO BE LINED WITH 2" DUCT LINER 1–1/2" PCF, K=0.28 AT 75° F, R=8 (MIN.) OR WRAP WITH FIBERGLASS DUCT WRAP, 3/4" PCF, K=0.31 AT 75° F, R=5 (MIN.). COMBINATION HEATING/COOLING MAKE–UP AIR DUCTWORK CONVEYING EVAPORATIVE COOLED AIR SHALL BE INSULATED ON THE EXTERIOR WITH 1–1/2" THICK GLASS FIBER RIGID BOARD WITH ALL SERVICE JACKET (MIN. 3 PCF DENSITY, K=0.23, R=8). RIGID INSULATION ON OUTDOOR DUCTWORK SHALL BE COVERED WITH A LAYER OF OPEN WEAVE GLASS CLOTH EMBEDDED BETWEEN TWO COATS OF WEATHERPROOF MASTIC OF NOT LESS THAN 1/8" TOTAL THICKNESS. DUCTWORK CONVEYING EVAPORATIVE COOLED AIR ONLY SHALL NOT BE INSULATED

NOTE: DUCTWORK INSULATION SHALL COMPLY WITH REQUIREMENTS OF 2018 IECC AND SHALL BE INSTALLED BY LICENSED INSULATION CONTRACTOR, IN ACCORDANCE WITH MANUFACTURER'S INSTALLATION INSTRUCTIONS. ALL AIR DUCTS MUST BE INSULATED TO THE FOLLOWING LEVELS:
A. SUPPLY AND RETURN AIR DUCTS FOR CONDITIONED AIR LOCATED IN UNCONDITIONED SPACES (SPACES NEITHER HEATED NOR COOLED) MUST BE INSULATED WITH A MINIMUM OF R–5. UNCONDITIONED SPACES INCLUDE ATTICS, CRAWL SPACES, UNHEATED BASEMENTS AND UNHEATED GARAGES.
B. SUPPLY AND RETURN AIR DUCTS AND PLENUMS MUST BE INSULATED TO A MINIMUM OF R–8 WHEN LOCATED OUTSIDE THE BUILDING.
C. WHEN DUCTS ARE LOCATED WITHIN EXTERIOR COMPONENTS (E.G. FLOORS OR ROOFS), MINIMUM R–8 INSULATION IS REQUIRED ONLY BETWEEN THE DUCT AND THE BUILDING EXTERIOR.

DUCTWORK INSULATION –
ALL ACOUSTIC LINER TO BE MINIMUM 1.5 PCF DENSITY, WITH NFPA 90A APPROVED LINER OR COATING. THERMAL INSULATION SHALL BE MINIMUM 3/4 PCF DENSITY, WITH A MAXIMUM "K" FACTOR OF 0.30 AT 75° F AND SHALL HAVE A FLAME RETARDANT FOIL–SKIMKRAFT VAPOR BARRIER (FSK), FASTENED TO DUCTWORK WITH 16 GA. WIRE @ 12" O.C. ALL INSULATION SHALL HAVE A FLAME SPREAD RATING OF 25 OR LESS, AND A SMOKE DEVELOPED RATING OF 50 OR LESS. EXTERIOR HVAC DUCTWORK TO BE LINED WITH 2" DUCT LINER 1–1/2" PCF, K=0.28 AT 75° F, R=8.

INTERIOR DUCTWORK BELOW CEILING INSULATION TO BE LINED WITH 1" DUCT LINER 1–1/2" PCF, K=0.28 AT 75° F, R=8 (MIN.), OR WRAP WITH 1–1/2" FIBERGLASS DUCT WRAP, 3/4 PCF, K=0.31 AT 75° F, R=5 (MIN.) AND FLAME RETARDANT FOIL–SKIMKRAFT VAPOR BARRIER (SKF). INTERIOR SHEET METAL DUCTWORK ABOVE CEILING INSULATION TO BE LINED WITH 2" DUCT LINER 1–1/2" PCF, K=0.28 AT 75° F, R=8 (MIN.) OR WRAP WITH FIBERGLASS DUCT WRAP, 3/4" PCF, K=0.31 AT 75° F, R=5 (MIN.). COMBINATION HEATING/COOLING MAKE–UP AIR DUCTWORK CONVEYING EVAPORATIVE COOLED AIR SHALL BE INSULATED ON THE EXTERIOR WITH 1–1/2" THICK GLASS FIBER RIGID BOARD WITH ALL SERVICE JACKET (MIN. 3 PCF DENSITY, K=0.23, R=8). RIGID INSULATION ON OUTDOOR DUCTWORK SHALL BE COVERED WITH A LAYER OF OPEN WEAVE GLASS CLOTH EMBEDDED BETWEEN TWO COATS OF WEATHERPROOF MASTIC OF NOT LESS THAN 1/8" TOTAL THICKNESS. DUCTWORK CONVEYING EVAPORATIVE COOLED AIR ONLY SHALL NOT BE INSULATED,

NOTE: DUCTWORK INSULATION SHALL COMPLY WITH REQUIREMENTS OF 2018 IECC AND SHALL BE INSTALLED BY LICENSED INSULATION CONTRACTOR, IN ACCORDANCE WITH MANUFACTURER'S INSTALLATION INSTRUCTIONS. ALL AIR DUCTS MUST BE INSULATED TO THE FOLLOWING LEVELS:
A. SUPPLY AND RETURN AIR DUCTS FOR CONDITIONED AIR LOCATED IN UNCONDITIONED SPACES (SPACES NEITHER HEATED NOR COOLED) MUST BE INSULATED WITH A MINIMUM OF R–5. UNCONDITIONED SPACES INCLUDE ATTICS, CRAWL SPACES, UNHEATED BASEMENTS AND UNHEATED GARAGES.
B. SUPPLY AND RETURN AIR DUCTS AND PLENUMS MUST BE INSULATED TO A MINIMUM OF R–8 WHEN LOCATED OUTSIDE THE BUILDING.
C. WHEN DUCTS ARE LOCATED WITHIN EXTERIOR COMPONENTS (E.G. FLOORS OR ROOFS), MINIMUM R–8 INSULATION IS REQUIRED ONLY BETWEEN THE DUCT AND THE BUILDING EXTERIOR.
EXCEPTION: DUCT INSULATION IS NOT REQUIRED ON DUCTS LOCATED WITHIN THE EQUIPMENT
EXCEPTION: DUCT INSULATION IS NOT REQUIRED WHEN THE DESIGN TEMPERATURE DIFFERENCE BETWEEN THE INTERIOR AND EXTERIOR OF THE DUCT OR PLENUM DOES NOT EXCEED 15° F.
D. MECHANICAL FASTENERS AND SEALS, MASTICS, OR GASKETS MUST BE USED WHEN CONNECTING DUCTS TO FANS AND OTHER AIR DISTRIBUTION EQUIPMENT, INCLUDING MULTIPLE–ZONE TERMINAL UNITS.
E. ALL JOINTS, LONGITUDINAL AND TRANSVERSE SEAMS, AND CONNECTIONS IN DUCTWORK MUST BE SECURELY SEALED USING WELDMENTS; MECHANICAL FASTENERS WITH SEALS, GASKETS, OR MASTICS; MESH AND MASTIC SEALING SYSTEMS; OR TAPES. TAPES AND MASTICS MUST BE LISTED AND LABELED IN ACCORDANCE WITH UL 181A AND SHALL BE MARKED "181A–P" FOR PRESSURE–SENSITIVE TAPE, "181A–M" FOR MASTIC OR "181A–H" FOR HEAT–SENSITIVE TAPE. TAPES AND MASTICS USED TO SEAL FLEXIBLE AIR DUCTS AND FLEXIBLE AIR CONNECTORS SHALL COMPLY WITH UL 181B AND SHALL BE MARKED "181B–FX" FOR PRESSURE–SENSITIVE TAPE OR "181B–M" FOR MASTIC. UNLISTED DUCT TAPE IS NOT PERMITTED AS A SEALANT ON ANY METAL DUCTS.

LOW PRESSURE HVAC DUCTWORK –
(2" W.G. OR LESS): CONSTRUCT PARTITION FORMING PLENUMS OR SUCTION CHAMBERS OF #18 GAUGE WITH 1–1/2" x 1–1/2" x 3/16" GALVANIZED IRON ANGLES AND RIVETS FOR SEAM CONNECTIONS AND STIFFENING. ALL SUPPLY, RETURN AND EXHAUST DUCTS (AS NOTED) SHALL BE PRIME STEEL SHEETS HOT–DIPPED GALVANIZED OF THE FOLLOWING GAUGES:
UP TO 12" WIDE OR DIAMETER – #26
13" UP TO 30" WIDE OR DIAMETER – #24
31" UP TO 45" WIDE OR DIAMETER – #22
ALL EXHAUST DUCTWORK SHALL BE – #24

HVAC INTERLOCKS/ SMOKE DETECTORS –
PROVIDE ALL LABOR, MATERIAL AND EQUIPMENT REQUIRED TO INTERLOCK HVAC SUPPLY AND EXHAUST SYSTEMS SPECIFIED ON THE DRAWINGS OR REQUIRED BY THE 2018 EDITION OF THE INTERNATIONAL MECHANICAL CODE, FURNISH, INSTALL AND CONNECT SMOKE DETECTORS (APPROVED BY REGULATING AGENCY) ON THE RETURN SIDE OF ALL HVAC FANS EXCEEDING 2000 CFM OR AS REQUIRED PER LOCAL REGULATIONS TO SHUT DOWN FAN IF SMOKE IS DETECTED IN DUCTWORK.

SMOKE DETECTOR SHALL BE MOUNTED IN RETURN AIR DUCT. AUTOMATIC SHUT–OFF SHALL BE ACCOMPLISHED BY INTERRUPTING THE POWER SOURCE OF THE MECHANICAL UNIT UPON DETECTION OF SMOKE IN THE MAIN RETURN AIR DUCT. ACTIVATION OF ANY DETECTOR SHALL SHUT DOWN ALL UNITS WITHIN THE SYSTEM. SMOKE DETECTOR SHALL BE LABELED BY AN APPROVED AGENCY FOR AIR DUCT INSTALLATION AND SHALL BE INSTALLED IN ACCORDANCE WITH THE MANUFACTURER'S INSTALLATION INSTRUCTIONS. SUCH DEVICES SHALL BE COMPATIBLE WITH THE OPERATION VELOCITIES, PRESSURES, TEMPERATURE AND HUMIDITY OF THE SYSTEM. DETECTOR SHALL BE 120 V/1Ø (OR AS DIRECTED BY THE ELECTRICAL CONTRACTOR) AND U.L. LISTED. COORDINATE AS REQUIRED PRIOR TO ORDERING AND INSTALLING. DETECTOR SHALL BE PROVIDED AND INSTALLED BY MECHANICAL. LINE VOLTAGE BY ELECTRICAL.
NOTE: IF A FIRE ALARM SYSTEM IS AVAILABLE, THE DUCT SMOKE DETECTOR(S) SHALL BE CONNECTED TO THE FIRE ALARM SYSTEM 2018 IMC 606.4.1. IF A FIRE ALARM SYSTEM IS NOT AVAILABLE, PROVIDE A VISIBLE AND AUDIBLE SUPERVISORY SIGNAL AT A CONSTANTLY SUPERVISED LOCATION TRIGGERED BY THE ACTIVATION OF A DUCT SMOKE DETECTOR. INCLUDE THE AIR DUCT DETECTOR TROUBLE INDICATOR (LED AT THE CEILING BELOW THE DUCT DETECTOR) AS REQUIRED BY 2018 IMC 606.4.1, EXCEPTION 2.
NOTE: SMOKE DETECTORS ASSOCIATED WITH SMOKE DAMPERS AND HVAC SHUTOFFS SHALL BE TESTED BY AN APPROVED TESTING AGENCY OR A QUALIFIED THIRD PARTY SPECIAL INSPECTOR. THE SPECIAL INSPECTOR/TESTING AGENCY SHALL BE AN INDEPENDENT THIRD PARTY INDIVIDUAL OR FIRM AND SHALL NOT BE THE INSTALLING CONTRACTOR. A PROFESSIONAL ENGINEER SHALL SUBMIT A FINAL SIGNED AND SEALED REPORT TO THE MECHANICAL INSPECTOR PRIOR TO CITY ISSUANCE OF FINAL INSPECTION APPROVAL OR OCCUPANCY APPROVAL, INCLUDING CONDITIONAL OCCUPANCY APPROVAL.
NOTE: IF A COMPLETE FIRE ALARM DETECTION SYSTEM IS INSTALLED IN THE BUILDING THEN SMOKE DUCT DETECTORS ARE NOT REQUIRED PER 2018 IMC, SECTION 606.2, AS LONG AS THE FIRE ALARM SYSTEM IS INTERCONNECTED TO THE MECHANICAL UNITS TO SHUT DOWN IN THE EVENT OF FIRE ALARM ACTIVATION IN ACCORDANCE WITH 2018 IMC, SECTION 606.4.

ELECTRICAL WORK –
MECHANICAL DIVISION SHALL FURNISH ALL MOTOR STARTERS REQUIRED FOR MECHANICAL EQUIPMENT, UNLESS INCLUDED AS AN INTEGRAL PART OF THE HVAC EQUIPMENT. PROVIDE SUITABLE ENCLOSURE PER NEMA STANDARDS. ALL LOW VOLTAGE (24V) CONTROL WIRING OR THERMOSTATS AND OTHER CONTROL REQUIREMENTS TO BE THE RESPONSIBILITY OF MECHANICAL CONTRACTOR. ALL LINE VOLTAGE WIRING AND CONDUIT INCLUDING LOW VOLTAGE CONTROL CONDUIT TO BE INSTALLED BY ELECTRICAL CONTRACTOR. SMOKE DETECTORS TO BE WIRED BY THE ELECTRICAL CONTRACTOR.

OUTSIDE AIR REQUIREMENTS –
LOCATE ALL OUTSIDE AIR/INTAKE AIR OPENINGS A MINIMUM OF 10'–0" FROM PLUMBING VENTS, EXHAUST FANS, AND/OR GAS FLUE VENTS. PROVIDE OUTSIDE AIR GRILLE (FILTER IF REQUIRED) AND OBD.
NOTE: MINIMUM OSA REQUIREMENTS SHALL COMPLY WITH 2018 IMC, SECTION 403.3.
A. CONTRACTOR TO BALANCE OUTSIDE AIR TO CFM SHOWN ON OUTSIDE AIR SCHEDULE.
B. CONTRACTOR SHALL PROVIDE A COPY OF AIR BALANCE TEST REPORT TO FIELD INSPECTOR PRIOR TO FINAL INSPECTION.
C. VENTILATION SYSTEMS SHALL BE BALANCED BY AN APPROVED METHOD. A BALANCE REPORT SHALL VERIFY THAT THE VENTILATION SYSTEM IS CAPABLE OF SUPPLYING AIR FLOW RATES REQUIRED BY 2018 IMC, SECTION 403.3.

SYSTEM START–UP/AIR BALANCE –
BEFORE FINAL ACCEPTANCE, CONTRACTOR SHALL DEMONSTRATE THAT ALL APPARATUS IS FUNCTIONING PROPERLY IN ACCORDANCE WITH FACTORY START–UP RECOMMENDATIONS. AIR QUANTITIES SHALL BE BALANCED FOR EVEN TEMPERATURES THROUGHOUT CONTROLS AND/OR INTERLOCKS/SMOKE DETECTORS ADJUSTED, AND THE SYSTEM PLACED INTO OPERATION. AIR BALANCE WORK SHALL BE PERFORMED BY QUALIFIED PERSONNEL LISTED WITH NEBB OR AABC. PROVIDE THE FOLLOWING START–UP BALANCE INFORMATION IN TWO (2) COPIES TO THE OWNER/ARCHITECT FOR REVIEW PRIOR TO PROJECT CLOSE: SUPPLY/EXHAUST CFM AT EACH DIFFUSER/REGISTER (USING FLOW HOOD), OUTSIDE AIR QUANTITY TO EACH HVAC UNIT, DISCHARGE/RETURN AIR TEMPERATURES AT THE HVAC UNIT (FOR BOTH HEATING AND COOLING MODE), AND THE HVAC MOTOR AMP DRAW. PROVIDE OWNER WITH WRITTEN CERTIFICATION FROM THE HVAC EQUIPMENT SUPPLIER(S) THAT ALL EQUIPMENT HAS BEEN INSTALLED PER MANUFACTURER'S RECOMMENDATIONS. INCLUDE THE COST OF ANY ADDITIONAL OPPOSED BLADE VOLUME DAMPERS, MOTOR SHEAVES, ETC. NECESSARY TO ACHIEVE AIR QUANTITIES LISTED. INCLUDE AN EXTENDED 90 DAY WARRANTY, DURING WHICH TIME THE ENGINEER MAY REQUEST A RECHECK OR RESETTING OF ANY AIR QUALITY, OR NOT MORE THAN TWO CHANGES OF NON–ADJUSTABLE SHEAVES TO OBTAIN DESIRED AIR QUANTITIES. CONTRACTOR SHALL MAKE ANY CHANGES IN PULLEYS, BELTS, OR ADDITIONAL DAMPERS REQUIRED FOR CORRECTED AIR BALANCE AS REQUIRED BY BALANCE AGENCY AT NO ADDITIONAL COST TO THE OWNER.

INSTRUCTIONS/O &M MANUAL –
THE CONTRACTOR SHALL INSTRUCT THE OWNER IN THE PROPER OPERATION AND MAINTENANCE OF ALL INSTALLED HVAC EQUIPMENT. THE CONTRACTOR SHALL PROVIDE A MINIMUM OF TWO (2) BOUND OPERATING AND MAINTENANCE MANUALS TO THE OWNER AT THE COMPLETION OF THE PROJECT. THE MANUAL SHALL INCLUDE: EQUIPMENT CAPACITY (INPUT AND OUTPUT), CONTROL AND/OR INTERLOCK WIRING DIAGRAMS, SEQUENCE OF OPERATION, PREVENTATIVE MAINTENANCE SCHEDULE, NAME, ADDRESS AND PHONE NUMBER OF THE LOCAL PRODUCT REPRESENTATIVE.
GUARANTEE –
ALL LABOR AND MATERIALS FURNISHED OR INSTALLED UNDER THIS SECTION SHALL CARRY A WRITTEN ONE (1) YEAR GUARANTEE BY THE MECHANICAL CONTRACTOR TO THE OWNER, COVERING MATERIALS AND WORKMANSHIP IN FULL. PROVIDE EXTENDED FIVE (5) YEARS FACTORY PARTS AND LABOR WARRANTY ON ALL AIR CONDITIONING COMPRESSORS. EXISTING HVAC EQUIPMENT, DUCTWORK AND/OR HVAC COMPONENTS REUSED IN THE JOB ARE NOT COVERED UNDER THIS WARRANTY.

MECHANICAL GENERAL NOTES

1. PRIOR TO THE CONTRACTOR ORDERING OR SETTING ANY AIR CONDITIONING EQUIPMENT, DUCTWORK OR AIR DEVICE, HE SHALL VERIFY LOCATION OF PLACEMENT WITH STRUCTURAL DRAWINGS AND CONFIRM WEIGHTS, DISCHARGE CONFIGURATION, SIZES, ELECTRICAL CHARACTERISTICS AND ANY OTHER DIMENSIONAL DATA WHICH MIGHT AFFECT THE SUCCESSFUL INSTALLATION OF THE MECHANICAL SYSTEM.

2. PROVIDE CLEARANCES AS PER MANUFACTURER'S RECOMMENDATIONS.

3. PROVIDE EQUIPMENT IDENTIFICATION AS TO THE SPACE OR AREA SERVED.

4. REFER TO ARCHITECTURAL DRAWINGS FOR ACCESS TO ROOF INSTALLED MECHANICAL EQUIPMENT.

5. PRIOR TO PENETRATION AND/OR INSTALLATION OF ANY ROOF TOP EQUIPMENT, CONTRACTOR IS TO CHECK IN WITH LANDLORD ROOF MONITOR. ALL ROOF WORK TO BE PERFORMED BY LANDLORD ROOF MONITOR CONTRACTOR. CONTRACTOR SHALL COORDINATE WITH ARCHITECT AND STRUCTURAL ENGINEER PRIOR TO COMMENCING WORK.

6. FIELD COORDINATE SIZE AND PLACEMENT OF DRAIN LINES REQUIRED FOR ROOFTOP HEAT PUMPS, EVAPORATIVE COOLERS, FURNACES, HUMIDIFIERS, ETC., WITH PLUMBING CONTRACTOR TO ROUGH–IN.

7. PROVIDE VIBRATION ISOLATORS FOR ALL MECHANICAL EQUIPMENT SUPPORTED FROM STRUCTURE.

8. NOTIFY GENERAL CONTRACTOR AND/OR ARCHITECT OF ANY DISCREPANCIES PRIOR TO ROUGH–IN.

9. ALL HVAC EQUIPMENT, INCLUDING EVAPORATIVE COOLERS, SHALL BE UL, ETL AND/OR AGA LISTED.

10. PROVIDE ALL EXHAUST AIR DUCTS WITH BACKDRAFT DAMPER.

11. PROVIDE AN ELECTRICAL INTERLOCK FOR MAKE–UP AIR UNITS AND ASSOCIATED EXHAUST FANS AS REQUIRED. SEE SCHEDULES.

12. KITCHEN HOOD AND EXHAUST DUCTWORK TO CONFORM TO NFPA–96 STANDARDS AND 2018 IMC SECTION 505 FOR DOMESTIC AND SECTION 506 FOR COMMERCIAL KITCHENS.

13. SLOPE ALL HORIZONTAL EXHAUST DUCTS AT 1/4" PER FOOT TOWARDS HOOD INTAKE.

14. PROVIDE CLEAN–OUT ACCESS PANELS AS SHOWN HAVING A FIRE RESISTIVE RATING EQUAL TO SHAFT ENCLOSURE.

15. EXTERNAL WELD ALL JOINTS AND SEAMS OF ALL KITCHEN EXHAUST DUCTS.

16. MECHANICAL CONTRACTOR TO COORDINATE EXACT KITCHEN HOOD OPENINGS WITH KITCHEN CONTRACTOR PRIOR TO ANY CONSTRUCTION.

17. PROVIDE FIRE DAMPERS AT ALL PENETRATIONS THROUGH FIRE RATED WALLS, CEILINGS AND FLOOR. FIRE DAMPER AND FIRE DAMPER INSTALLATION SHALL CONFORM TO LOCAL BUILDING AND MECHANICAL CODE REQUIREMENTS AND SMACNA STANDARDS. PROVIDE WITH ACCESS DOOR AS REQUIRED.

18. FLUE AND COMBUSTION AIR DUCTS PENETRATING ROOF STRUCTURE SHALL BE ENCLOSED IN ONE–HOUR SHAFT.

19. ALL TEMPERATURE CONTROLS ARE TO BE TESTED, ADJUSTED AND CALIBRATED FOR PROPER OPERATION.

20. MOUNT ALL THERMOSTATS AT 48" THROUGH 54" ABOVE FINISHED FLOOR. COORDINATE EXACT LOCATION AND MOUNTING HEIGHT WITH THE ARCHITECT/OWNER. PROVIDE WITH LOCKING COVER AS REQUIRED BY THE ARCHITECT AND/OR OWNER. PROVIDE WITH PROGRAMMABLE THERMOSTAT.

21. INSTALL CLEANOUTS AT EVERY 90° TURN ON AIR CONDITIONING CONDENSATE DRAIN LINES.

22. KEEP ALL FLUES, VENTS THROUGH ROOF AND EXHAUST DUCTS A MINIMUM OF 10'–0" FROM OUTSIDE AIR INTAKES OR WINDOWS AND FROM ALL VERTICAL PORTIONS OF THE BUILDING.

23. ALL GAS VENTS SHALL BE U.L. LISTED TYPE 'B' DOUBLE WALL AS MANUFACTURED BY "METALBESTOS" OR EQUIVALENT.

24. COMBUSTION AIR DUCT OPENINGS TO BE COVERED WITH CORROSIVE RESISTANT SCREEN OF 1/4" MESH.

25. CONTRACTOR SHALL BALANCE AIR DISTRIBUTION TO WITHIN 10% OF VALUES LISTED ON DRAWINGS. CONTRACTOR SHALL PROVIDE TENANT WITH A COPY OF FINAL HVAC AIR TEST AND BALANCE REPORT FROM INDEPENDENT NEBB ORABC CERTIFIED CONTRACTOR.

26. LIGHTING LOCATIONS TAKE PRECEDENCE OVER DIFFUSER LOCATION. CONTRACTOR SHALL MAKE NECESSARY ADJUSTMENTS TO DIFFUSERS TO AVOID ANY CONFLICT WITH LIGHTING LAYOUT. EXACT PLACEMENT OF DIFFUSERS AND REGISTERS TO BE COORDINATED WITH ARCHITECT AND CONTRACTORS.

27. UNDERCUT ALL DOORS TO ROOMS WHERE A SUPPLY DIFFUSER EXISTS BUT NO RETURN GRILLE IS PRESENT BY A MINIMUM OF 1". THIS WILL ALLOW FOR FREE MIGRATION OF RETURN AIR.

28. COORDINATE OPENINGS FOR GRILLES, REGISTERS, DIFFUSERS, AND DUCTWORK WITH FRAMING CONTRACTOR PRIOR TO ROUGH–IN.

29. PROVIDE RADIUS ELBOWS, TURNING VANES, AND SPLITTER DAMPERS IN BRANCHES AND EXTRACTORS WHERE APPLICABLE. TURNING VANES SHALL BE INSTALLED IN ALL MITERED ELBOWS.

30. INSULATE FIRST TEN FEET (10') OF DUCTWORK WITH 1" THICK INTERNAL ACOUSTICAL INSULATION. INSULATE ALL SUPPLY AND RETURN AIR DUCTWORK, ALL EXTERIOR DUCTWORK AND OTHER DUCTWORK NOT WITHIN THE ENVELOPE OF THE AIR CONDITIONED SPACE.

31. ALL DUCTWORK SHALL BE CONSTRUCTED AND INSTALLED IN ACCORDANCE WITH "ASHRAE GUIDE" AND "SMACNA STANDARDS" AND IN CONFORMANCE WITH REQUIREMENTS OF LOCAL BUILDING AND MECHANICAL CODES. WHERE MORE THAN ONE REGULATION OR CODE APPLIES, THE MORE STRINGENT REQUIREMENT SHALL GOVERN.

32. FLEXIBLE DUCTWORK SHALL COMPLY WITH THE CLASS 1 REQUIREMENTS OF THE NFPA BULLETIN NO. 90A AND SHALL BE INSULATED WITH 1" FIBERGLASS, SUPPORTED BY HELICALLY WOUND STEEL WIRE WITH REINFORCED METALIZED OUTER JACKET RATED FOR USE IN PLENUMS. ATTACHMENT SHALL BE WITH WORM DRIVE CLAMPS. LENGTH SHALL NOT EXCEED 8'–0" PROVIDE RIGID ROUND DUCTWORK FOR RUNS EXCEEDING 8'–0" IN TOTAL LENGTH.
NOTE: FLEXIBLE DUCTWORK NOT ALLOWED AT EXPOSED LOCATIONS.

33. TAPE ALL DUCT JOINTS WITH CANVAS AND ARABOL ADHESIVE.

34. DUCTWORK CONSTRUCTION AND INSTALLATION INCLUDING SHEET METAL GAUGES, REINFORCEMENT, JOINT SEALING, AIR LEAKAGE AND DETAILS NOT SPECIFICALLY SHOWN ON DRAWINGS SHALL BE IN ACCORDANCE WITH THE 2018 EDITION OF THE IMC FOR LOW VELOCITY DUCT CONSTRUCTION STANDARDS.

35. ALL DUCT DIMENSIONS SHOWN ARE CLEAR DIMENSIONS INSIDE DUCT LINER.

36. TAKE–OFF FITTINGS SHALL BE BELL MOUTH SPIN–IN TYPE WITH QUADRANT DAMPER. PROVIDE VOLUME DAMPER AT EACH AND EVERY SUPPLY AIR BRANCH DUCT TAKE–OFF.

37. IF ABOVE CEILING DUCTWORK IS FABRICATED OF SHEET METAL, HANGERS SHALL BE INSTALLED AS REQUIRED BY THE 2018 EDITION OF THE IMC.

38. MECHANICAL CONTRACTOR TO VERIFY THAT ALL DUCTWORK WILL FIT WHERE INDICATED WITHOUT INTERFERENCES.

39. DUCTS SHALL CONFORM TO DIMENSIONS ON THE DRAWINGS UNLESS LOCATION OF STRUCTURAL MEMBERS PROHIBIT. IN CASE OF A CHANGE IN DIMENSIONS, CROSS SECTIONAL AREAS SHALL BE MAINTAINED, AND A MAXIMUM OF 1:4 RATIO FOR RECTANGULAR DUCTS SHALL ALSO BE MAINTAINED DUCT SIZES SHOWN ARE "CLEAR INSIDE" DIMENSIONS.
NOTE: CONTRACTOR OPTION TO USE ROUND DUCT WITH THE SAME CUBIC INCH VOLUME.

40. EXHAUST DUCTS SHALL BE 26 GAUGE GALVANIZED STEEL. SEE MECHANICAL EQUIPMENT SCHEDULE OR FLOOR PLAN FOR SIZES AND TERMINATION POINT.

41. ALL "FACTORY MADE" DUCTS MUST BE CLASS "0" OR CLASS "1".

42. AIR CONDITIONING UNITS SERVING EVAPORATIVE COOLERS/MAKE–UP AIR UNITS SHALL BE FABRICATED FROM ALUMINUM SHEETS AND HAVE NO DUCT LINER.

43. ALL PENETRATIONS THROUGH DRAFT–STOPS TO BE SEALED.

44. FURNISH ALL LABOR, MATERIALS, TOOLS EQUIPMENT, TRANSPORTATION COSTS, RIGGING, FEES, PERMITS, CERTIFICATES OF INSPECTION, ETC., NECESSARY OR REASONABLE, AS REQUIRED FOR THE COMPLETE INSTALLATION OF ALL AIR CONDITIONING WORK. THE WORK SHALL BE IN STRICT ACCORDANCE WITH ASHRAE GUIDE, AND ALL LOCAL AND STATE CODES, ORDINANCES AND REGULATIONS.

45. UPON COMPLETION AND TESTING OF AIR CONDITIONING EQUIPMENT, THE CONTRACTOR SHALL REPLACE ALL CONSTRUCTION AIR FILTERS WITH NEW FILTERS OF THE SIZED SPECIFIED BY THE MANUFACTURER.

46. THE MECHANICAL CONTRACTOR SHALL ADEQUATELY SUPPORT, ERECT AND BALANCE ALL MATERIALS AND EQUIPMENT IN CONFORMANCE WITH LOCAL CODES AND HIGH STANDARDS OF CONSTRUCTION PRINCIPLES AND PRACTICES.

47. THE CONTRACTOR SHALL DO ALL THE NECESSARY CUTTING OF WALLS AND CEILING. NO STRUCTURAL MEMBER SHALL BE CUT WITHOUT PERMISSION FROM THE ARCHITECT AND THE ENGINEER. PATCH AROUND ALL OPENINGS TO MATCH EXISTING CONSTRUCTION. THE GENERAL CONTRACTOR SHALL BRING ALL SURFACES (FLOOR, WALLS AND CEILINGS) BACK TO ORIGINAL CONDITION AFTER MODIFICATIONS HAVE BEEN MADE.

48. INSTALL A COMPLETE AND WORKING MECHANICAL SYSTEM IN STRICT ACCORDANCE WITH THE 2018 INTERNATIONAL MECHANICAL CODE AND SMACNA STANDARDS.

49. COORDINATE EXACT LOCATION OF MECHANICAL EQUIPMENT, AIR DEVICES, PIPING, DUCTWORK, ETC., WITH PLUMBING, ELECTRICAL, STRUCTURAL, ARCHITECTURAL AND GENERAL CONTRACTOR'S DRAWINGS.

50. WORKMANSHIP: ALL EQUIPMENT APPURTENANCES, DEVICES AND PIPING SHALL BE INSTALLED IN CONFORMANCE WITH THE PROVISIONS AND INTENT OF THE 2018 INTERNATIONAL MECHANICAL CODE.

51. CONTRACTOR SHALL CHECK FOR PROPER OPERATION AND INSTALLATION, AND SHALL THOROUGHLY EXAMINE, CLEAN AND INSPECT ALL EXISTING EQUIPMENT PRIOR TO COMMENCING WORK. NOTIFY BUILDING OWNER OF ANY DYSFUNCTIONAL EQUIPMENT IMMEDIATELY.

52. CONTRACTOR SHALL INSURE THAT ALL EXISTING MECHANICAL EQUIPMENT IS IN SATISFACTORY WORKING CONDITION SO HE MAY MAKE PROVISIONS IN HIS BID TO ACCOMMODATE ANY REPAIRS AND/OR REPLACEMENTS REQUIRED.

53. CONTRACTOR MAY, AT HIS DISCRETION REUSE ANY/ALL EXISTING EQUIPMENT NOT SPECIFICALLY NOTED TO BE REMOVED OR ABANDON AS LONG AS SUCH EQUIPMENT SATISFACTORILY MEETS THE DESIGN REQUIREMENTS SET FORTH IN THESE DOCUMENTS.

54. SIZES SHOWN ON AIR DEVICES ARE MIN. SIZE REQUIRED. CONTRACTOR SHALL VERIFY ALL AIR DEVICE SIZES AND REPLACE WITH NEW SIZE AS NECESSARY. BALANCE ALL AIR DEVICES TO CFM NOTED OR AS REQUIRED TO PROVIDE EVEN TEMPERATURES.

55. VERIFY EXACT SIZE, LOCATION, ROUTING, ETC., OF ALL EXISTING MECHANICAL EQUIPMENT, DUCTWORK, AIR DEVICES, THERMOSTATS, SENSORS, PIPING, ETC., WHICH ARE TO BE REMOVED, REPLACED, ABANDONED, REWORKED, ETC., AS REQUIRED AND AS SHOWN ON DRAWINGS.

56. ALL SALVAGEABLE ITEMS SHALL BE RETURNED TO THE OWNER. MECHANICAL CONTRACTOR SHALL RETURN ALL HVAC EQUIPMENT NOTED TO BE REMOVED UNDER THIS CONTRACT TO BUILDING OWNER.

57. PROJECT INVOLVES WORK IN AN EXISTING FACILITY. LAYOUT OF DRAWINGS IS DIAGRAMMATICAL AND IS NOT INTENDED TO SHOW EVERY OFFSET AND FITTING, NOR EVERY STRUCTURAL DIFFICULTY THAT WILL BE ENCOUNTERED DURING DEMOLITION/CONSTRUCTION WORK.

58. ALL PATCHING AND/OR REPAIRING OF THE EXISTING WALLS, FLOORS, CEILINGS, ETC. DAMAGED DUE TO REMOVAL OF EXISTING EQUIPMENT OR INSTALLATION OF NEW EQUIPMENT SHALL BE THE RESPONSIBILITY OF THE MECHANICAL CONTRACTOR.

59.MECHANICAL CONTRACTOR TO VERIFY EXACT LOCATION, SIZE, AND CONDITION OF ALL EQUIPMENT, DUCTWORK, PIPING, ETC., PRIOR TO SUBMITTING A BID FOR DOING WORK ON THIS PROJECT AND REPORT ANY DISCREPANCIES TO THE ARCHITECT.

60. BEFORE BEGINNING ANY CUTTING OR DEMOLITION WORK, CONTRACTOR SHALL CAREFULLY SURVEY EXISTING WORK AND EXAMINE ALL DRAWINGS TO DETERMINE EXTENT OF THE WORK. CONTRACTOR SHALL TAKE ALL NECESSARY PRECAUTIONS TO INSURE AGAINST DAMAGE DUE TO EXISTING WORK TO REMAIN IN PLACE, TO BE RE–USED, OR TO REMAIN PROPERTY OF THE OWNER, AND ANY DAMAGE TO SUCH WORK SHALL BE REPAIRED OR REPLACED AT NO ADDITIONAL COST TO OWNER. CONTRACTOR SHALL CAREFULLY COORDINATE WORK OF THIS SECTION WITH OTHER WORK AND CONSTRUCT AND MAINTAIN SHORING, BRACING, AND SUPPORTS AS REQUIRED.

61. WHERE PIPING, DUCTWORK AND/OR EQUIPMENT IS TO BE REMOVED, REMOVE ALL ASSOCIATED HANGERS, SUPPORTS, INSULATION, ETC. VALVES SHALL REMAIN WHERE APPROPRIATE AND/OR ADDED WHERE REQUIRED.

62. NEW HVAC EQUIPMENT AND AIR DEVICES ARE REQUIRED TO MATCH EXISTING. CONTRACTOR TO FIELD VERIFY MANUFACTURER AND MODEL NUMBER OF EXISTING HVAC EQUIPMENT AND EXISTING AIR DEVICES AND USE SAME TYPE FOR NEW AND RENOVATED CONSTRUCTION.

63. CONTRACTOR MAY BE REQUIRED TO REPLACE EXISTING AIR DEVICE WITH NEW AIR DEVICE AS MAY BE REQUIRED BY DIFFERENT CEILING, DIFFERENT CFM REQUIREMENTS, DAMAGED AIR DEVICE, ETC.

64. CONTRACTOR SHALL VERIFY IN FIELD THAT ALL EQUIPMENT, DUCTWORK, AIR DEVICES, ETC. FOR EACH SYSTEM SERVE THE SAME ZONE AND THAT ANY ONE SYSTEM DOES NOT SERVE MORE THAN ONE TENANT. WHERE A CONFLICT OCCURS, THE ARCHITECT SHALL BE PROMPTLY NOTIFIED AND HIS/HER DECISION SHALL BE FINAL.

65. CONTRACTOR IS TO MAKE ARRANGEMENTS WITH ANY EXISTING TENANTS PRIOR TO CONSTRUCTION FOR ALLOWABLE CONSTRUCTION TIMES WITHIN THEIR SPACE.

66. NEW EQUIPMENT AND AIR DEVICES ARE REQUIRED TO MATCH EXISTING. CONTRACTOR TO FIELD VERIFY MANUFACTURER AND MODEL NUMBER OF EXISTING EQUIPMENT AIR DEVICES AND USE SAME TYPE FOR NEW AND RENOVATED CONSTRUCTION.

67. MANUFACTURERS AND MODEL NUMBERS LISTED ARE INTENDED TO ESTABLISH A MINIMUM QUALITY AND PERFORMANCE LEVEL. SUBSTITUTIONS WILL BE EVALUATED UPON REQUEST.

68. ALL ROOF MOUNTED EQUIPMENT SHALL BE FULLY SCREENED BY PARAPET WALLS (OR APPROVED SCREENING) EQUAL TO OR GREATER THAN THE HIGHEST POINT ON THE MECHANICAL EQUIPMENT.

69. ALL ROOF MOUNTED EQUIPMENT SHALL BE PERMANENTLY MARKED IN AN APPROVED MANNER (SUNLIGHT RESISTANT) THAT UNIQUELY IDENTIFIES THE APPLIANCE AND THE AREA IT SERVES. AS REQUIRED BY 2018 IMC, SECTION 304.11.

70. HVAC SYSTEM SHOWN IS BASED ON PREVIOUS T.I. DRAWINGS AND NOT ACTUAL FIELD MEASUREMENTS OR AS–BUILT DRAWINGS.

71. REMOVE ALL EXISTING HVAC DUCTWORK AND DIFFUSERS AND REPLACE WITH NEW AS SHOWN AND AS REQUIRED.

ARCHITECT
CORALIC, LLC
EDIN CORALIC
9700 MACKENZIE ROAD, STE 222
ST. LOUIS, MO 63123
p: 314.578.4953
edin@coralicarchitecture.com

STRUCTURAL ENGINEER
JAMES C. KREHER
JIM KREHER
208 N. MAIN STREET,
COLUMBIA, IL 62236
p: 618.281.8505
jimk@kreherengineering.com

MEP ENGINEER
Case Engineering
DARRELL R. CASE
796 MERUS CT.,
FENTON, MO 63026
T. 636.349.1600 F. 636.349.1730
dcase@caseengineeringinc.com

10.11.2021

STATE OF MISSOURI
DARRELL R. CASE
NUMBER PE-23303
PROFESSIONAL ENGINEER

Project No: MO0102
Dutch Bros Coffee - New Freestanding Store
500 NW Chipman Road. Lee's Summit, Missouri 64086
for: Dutch Bros Coffee
110 SW 4th St.
Grants Pass, OR 97526

ISSUED FOR PERMIT:
10.11.2021

REV:	DATE:	DESCRIPTION:

SHEET NAME:
MECHANICAL SPECIFICATIONS

SHEET NUMBER:
M3.0

© 2020 DB Franchising USA, LLC

PLUMBING SYMBOLS LEGEND	
— G —	GAS PIPING
— CD —	CONDENSATE DRAIN PIPING
— - —	COLD WATER PIPING
— - - - —	HOT WATER PIPING (140°)
— - - - - —	HOT WATER RECIRCULATING PIPING
—SAN—	SANITARY WASTE PIPING
— FW—	FILTERED WATER PIPING
—140° —	140° WATER PIPING
— GW—	GREASE WASTE PIPING
– – – – – –	SANITARY VENT PIPING
VTR	VENT THROUGH ROOF
	PLUMBING TRAP
	PIPE TURNING DOWN
	PIPE TURNING UP
	CHECK VALVE
	UNION
AFF	ABOVE FINISHED FLOOR
CO	CLEAN OUT
	PRESSURE REGULATING VALVE (PRV) (50 PSI)
	BALL VALVE
	BALANCE VALVE
EWF	ELECTRIC WATER FOUNTAIN
GCO	GRADE CLEAN OUT
	CIRCUIT SETTER BALANCE VALVE
	POINT OF CONNECTI0N
F	BELOW FLOOR
C	ABOVE CEILING
— PD —	PUMP DISCHARGE

GENERAL NOTES:

1. EXACT LOCATION OF PLUMBING FIXTURES SHALL BE DETERMINED FROM ARCHITECTURAL DRAWINGS.
2. BEFORE SUBMITTING BID, THE PLUMBING CONTRACTOR SHALL REVIEW THE ARCHITECTURAL DRAWINGS AND INCLUDE IN HIS BID AN AMOUNT TO FURNISH AND INSTALL ANY FIXTURES WHICH ARE SHOWN IN ADDITION TO FIXTURES SHOWN ON THE PLUMBING DRAWINGS.
3. CONTRACTOR SHALL VERIFY INVERT ELEVATION OF SEWERS TO WHICH NEW WASTE LINES ARE TO BE CONNECTED BEFORE MAKING UP OR INSTALLATION OF NEW WASTE SYSTEM.
4. CONTRACTOR SHALL VERIFY AND COORDINATE LOCATION OF ALL PLUMBING LINES WITH DUCTWORK AND ELECTRICAL SERVICES.
5. THE INSTALLATION OF ALL VALVES, UNIONS, THERMOMETERS, GAUGES, OR OTHER INDICATING OR RECORDING EQUIPMENT, OR SPECIALTIES REQUIRING FREQUENT READING, REPAIRS, ADJUSTMENT, INSPECTION, REMOVAL OR REPLACEMENT SHALL BE CONVENIENTLY AND ACCESSIBLY LOCATED WITH REFERENCE TO THE FINISHED BUILDING.
6. WHERE POSSIBLE, THE VENTS TOGETHER SO THAT A MINIMUM NUMBER TERMINATE THROUGH THE ROOF.
7. WATER CLOSETS IN PUBLIC TOILET ROOMS SHALL CENTER ON THE FINAL LAYOUT OF TOILET PARTITIONS.
8. ALL VENTS THROUGH ROOF SHALL BE AT LEAST 10' REMOVED FROM ALL AIR INTAKES, EVAP. COOLERS.
9. CONTRACTOR SHALL NOT CUT HOLES IN STRUCTURAL MEMBERS WITHOUT FIRST SECURING WRITTEN APPROVAL FROM ARCHITECT.
10. CONTRACTOR SHALL INSTALL DIELECTRIC UNIONS AT CONNECTION OF DISSIMILAR METALS.
11. CONTRACTOR SHALL ROUGH-IN ALL WASTE AND SUPPLIES TO SPECIAL EQUIP. ACCORDING TO MANUFACTURERS SHOP DRAWINGS AND MAKE FINAL CONNECTIONS ALL SUPPLIES SHALL BE VALVED.
12. ASSUMED WATER PRESSURE-CONTRACTOR SHALL VERIFY ACTUAL WATER PRESSURES PRIOR TO CONSTRUCTION. IF PRESSURE IS LESS THAN 60 PSI, CONTRACTOR SHALL CONTACT THE ENGINEER FOR PIPE SIZING EVALUATION. IF PRESSURE EXCEEDS 80 PSI, A PRESSURE REDUCING VALVE SHALL BE PROVIDED. PIPING VELOCITY SHALL NOT EXCEED 8 FPS AND HOT WATER VELOCITY SHALL NOT EXCEED 5FPS.

FIELD VERIFICATION NOTES:

1. THE PLUMBING CONTRACTOR SHALL VISIT THE SITE PRIOR TO BID TO FIELD VERIFY ALL EXISTING CONDITIONS WHICH MAY AFFECT HIS BID. THE FOLLOWING ITEMS SHALL BE VERIFIED.
   1.A.EXACT PLACEMENT SIZE CAPACITY MANUFACTURER AND CONDITION OF ALL EXISTING PLUMBING EQUIPMENT WITHIN SCOPE OF WORK, WHETHER SPECIFICALLY SHOWN OR NOT.
   1.B.SIZE AND LOCATION OF ALL EXISTING WASTE, GREASE WASTE, VENT AND WATER PIPING.
2. ALL REFERENCES ON THESE DRAWINGS TO EXISTING EQUIPMENT, WATER IS THE RESPONSIBILITY OF THE CONTRACTOR TO VERIFY ALL THESE ITEMS PRIOR TO BID AND INCLUDE IN HIS BID ANY AND ALL AMOUNTS REQUIRED TO ACCOMMODATE EXISTING CONDITIONS.
3. NO ALLOWANCES WILL BE MADE AFTER THE PROJECT HAS BEEN AWARDED FOR FAILURE TO VERIFY EXISTING CONDITIONS.
4. ANY DISCREPANCIES WHICH MAY AFFECT THE CONTRACTOR BID SHALL BE BROUGHT TO THE ATTENTION OF THE ENGINEER AND ARCHITECT FOR DIRECTION.
5. PLUMBING ROUTINGS BASED ON OWNER'S SCHEMATICS OF LOCATION OF EXISTING FIXTURES AND SHELL DRAWINGS. CONTRACTOR RESPONSIBLE FOR VERIFICATION OF ACTUAL LOCATION OF SUPPLY LINES AND MAKING APPROPRIATE ADJUSTMENTS TO ACTUAL CONDITIONS IN THE FIELD.
6. PRIOR TO CONSTRUCTION, VERIFY THE LOCATION OF THE HVAC/WALK-IN CONDENSATE FLOOR SINK. IF SLOPE AND DISTANCE OR IF IT IS INFEASIBLE TO DISPOSE OF WALK-IN COOLER CONDENSATE. USE A CONDENSATE PUMP.

PLUMBING FIXTURE SCHEDULE

DESIGNATION	MODEL NUMBER	MFR.	COLD WATER	HOT WATER	WASTE	VENT SIZE	REMARKS
P-1	WATER CLOSET K-3619 ADA COMPLIANT ELONGATED BOWL	KOHLER	½"	-	4"	2"	18" HIGH BOWL CSEAT AND CAP BOLTS. 1.28 GAL PER FLUSH INSTALL WITH ANGLE STOP. PROVIDE "WHITE" COLOR SELECTION FOR CHINA.
P-2	LAVATORY SINK K-2030 ADA COMPLIANT	KOHLER	½"	½"	2"	2"	DELTA FAUCET 501LF-HGMHDF SINGLE LEVER WITH 0.5 GPM VANDAL RESISTANT AERATOR, GRID STRAINER TAILPIECE, OFFSET WHEELCHAIR TRAP LOOSE KEY STOP. INSTALL HANDLE LIMIT STOP KIT WITHIN SINGLE LEVEL MIXING FAUCET TO LIMIT OUTLET HOT WATER SUPPLY TO 110°F.
P-3	WATER FILTER BY OWNER	EVERPURE	1¼"	-	-	-	PLUMBING CONTRACTOR SHALL INSTALL WATER FILTER SUPPLIED BY OWNER. PROVIDE WITH BALL ISOLATION VALVE AND UNION ON BOTH ENDS OF ALL CONNECTIONS. PROVIDE RPZ WITH DRAIN CUP IF REQUIRED BY CODE.
P-6	WATER HEATER - TANK DEN-52	AO SMITH	1"	1"	-	-	ELECTRIC - 10KW/3PHASE
P-7	HAND SINK 7-PS-56	ADVANCE TABCO	½"	½"	2"	2"	PROVIDED BY DBC, INSTALLED BY GC.
P-8	3 COMPARTMENT SINK BY OWNER	-	½"	½"	(3)2"	-	PLUMBING CONTRACTOR TO PROVIDE ½" CW AND ½" HW SUPPLY LINES WITH ANGLE VALVE SHUOFF AND SUPPLY STOPS TO SINK FAUCET. PLUMBING CONTRACTOR TO PROVIDE (3) 2" WASTE LINES FROM EACH BAY AND INDIRECT WASTE TO FLOOR SINK BELOW. PROVIDE FISHER 34271 FAUCET AND 24090 WASTE DRAIN WITH STRAINERS, INSTALLED BY PC.
P-9	PULL-OUT SPRAYER HANDLE MPZ-4DLN-06	T&S (T&SBRASS. COM)	-	-	-	-	TO BE INSTALLED IN DB PROVIDED STAINLESS STEEL TABLE BY PC.
P-10	MOP SINK Z1996-24	ZURN	¾"	¾"	3"	2"	MOP SERVICE BASIN WITH 10" HIGH WALLS 3" DRAIN , FIAT 830-AA SERVICE FAUCETS WITH VACUUM BREAKER, INTEGRAL STOPS AND HOSE WITH HOSE BRACKET.
P-11	FLOOR SINK Z1900	ZURN	-	-	4"	2"	12" X 12" X 6" DEEP CAST IRON BODY WITH WHITE PORCELAIN ENAMEL
P-12	FLOOR DRAIN EZ-5	ZURN	-	-	2"	2"	POLISHED BRASS STRAINER, AND TRAP PRIMER. LOCATE PRIMER WITH SHUT-OFF VALVE AND ACCESS PANEL IN WALL. COORDINATE WITH GENERAL CONTRACTOR.
P-13	GREASE INTERCEPTOR GB-50	SCHIER	-	-	4"	2"	SCHIER GB-50 50GPM BELOW-GRADE AT EXTERIOR VENTED THROUGH BUILDING. PROVIDE HI TRAFFIC COVER AND ACCESS. FINAL SIZE TO BE COORDINATED WITH LOCAL AUTHORITY.
P-14	ROOF DRAIN Z165	ZURN	-	-	3"	-	REFER TO ARCHITECTURAL SHEET A4.0 FOR ROOF DRAIN LOCATIONS AND DETAILS.
P-15	WALL HYDRANT HY-420-8	WATTS	1/2"	-	-	-	6" NON-FREEZE WALL HYDRANT, MOUNT AT 24"A.F.F. AT REAR ELEVATION.
P-16	YARD HYDRANT EVERBILT	WATTS	1/2"	-	-	-	FROST PROOF 2FT. BURY DEPTH
P-17	CIRCULATING PUMP 0010	TACO	-	-	-	-	115V, 3250 RPM, PROVIDE WITH AQUASTAT AND/OR TIMER AS REQUIRED.
P-18	BOOSTER PUMP AQUAVAR BAQUABII 1151AB25HM03	AQUAVAR	1-1/4"	-	-	-	1 HP VARIABLE SPEED CONTROLLER, 115V INPUT, 30 GPM @ 35 PSI BOOST. PROVIDE ALL NECESSARY VALVES AND ACCESSORIES RECOMMENDED BY MANUFACTURER FOR A COMPLETE SYSTEM.

SANITARY SIZING CALCULATION

FIXTURE	DESIGNATION	DFU WASTE	QUANTITY	TOTAL
WATER CLOSET	P-1	4	1	4
LAVATORY	P-2	1	1	1
FLOOR DRAIN	P-12	5	1	5
3 COMP SINK	P-8	6	1	6
FLOOR SINK	P-11	6	5	30
HAND SINK	P-7	2	2	4
MOP SINK	P-10	3	1	3
			TOTAL (DFU)	53

KITCHEN FIXTURE SCHEDULE

DESIGNATION	MFR. AND MODEL NUMBER	COLD WATER	FILTERED COLD WATER	HOT WATER	WASTE	VENT SIZE	REMARKS
P-4	DIPPERWELL FAUCET & SINK ASSEMBLY	½"	-	-	½"	-	SET INTO PRE-CUT HOLE IN COUNTER. CONNECT CW BRAIDED STAINLESS TO FAUCET AND PVC DRAIN TO WELL. PIPE DRAIN STRAIGHT BACK TO WALL, DOWN WALL, THEN FORWARD BETWEEN WHEELS OF ICE BIN BRACED TO FLOOR WITH UNISTRUT AND A 1" AIR GAP OVER FLOOR SINK
P-5	RAPID RINSE STATION BY OWNER	-	-	-	¾"	-	PLUMBING CONTRACTOR TO PROVIDE ½" HW LINE WITH BALL VALVE SHUT-OFF. PROVIDE FINAL COLD WATER CONNECTION TO RAPID RINSE STATION. PROVIDE ¾" INDIRECT WASTE LINE TO FLOOR SINK BELOW. (PROVIDE RPZ IF REQUIRED BY LOCAL CODE)
EQ-1	ESPRESSO MACHINE (3 MACHINE GROUP+1 OPTIONAL) BY OWNER	-	(4)½"	-	(3)¾"	-	CONTRACTOR TO PROVIDE ½" FW LINE WITH BRAIDED FLEX HOSE AND BALL VALVE SHUT-OFF. PROVIDE ¾" INDIRECT WASTE LINE TO FLOOR SINK BELOW. TYPICAL OF 3 MACHINES IN GROUP.
EQ-3	BUNN WATER DISPENSER BY OWNER	-	(4)½"	-	-	-	CONTRACTOR TO PROVIDE ½" FW WITH BALL VALVE SHUT-OFF. SUPPLIED WITH ASSE 1022 INLINE CARTRIDGE BACKFLOW.
EQ-4	GLASS FILLER BY OWNER	-	(4)½"	-	-	-	¼" FILTER WATER SUPPLY - NO DRAIN REQUIRED
EQ-8	ICE MACHINE BY OWNER	1/2"	-	-	¾"	-	PROVIDE FINAL COLD WATER CONNECTION TO ICE MACHINE FILTER EQ-8B. PROVIDE ¾" INDIRECT WASTE LINE TO FLOOR SINK BELOW. BACKFLOW ON FILTER ASSEMBLY IF REQUIRED. NOTE: PC AND EC TO PROVIDE ADDITIONAL OUTLET AND WATERLINE STOP FOR FUTURE 2ND ICE MACHINE.
EQ-8B	ICE MACHINE WATER FILTER PENTAIR EVERPURE EV9293-22	1/2"	-	-	-	-	PROVIDE 1/2" COLD WATER TO ICE MACHINE FILTER.
EQ-9	ICE STORAGE BIN BY OWNER	-	-	-	¾"	-	PROVIDE ¾" INDIRECT WASTE LINE TO FLOOR SINK BELOW.

GENERAL NOTES:

1. PLUMBING CONTRACTOR SHALL STRAP UP ALL SUPPLY LINES TIGHT TO STAINLESS TABLES WITH ZIPTIES SO THAT UNDER COUNTER EQUIPMENT CAN BE REMOVED WITHOUT GETTING CAUGHT IN THE BRAIDED STAINLESS SUPPLY LINES.
2. PLUMBING CONTRACTOR SHALL RUN DRAINS OFF OF STAINLESS TABLES AND DRINK EQUIPMENT IN RIGID COPPER PIPE. DRAINS ARE TO BE RUN TOWARD THE CENTER OF THE FLOOR SINK BENEATH EACH TABLE. DRAINS WILL FIT BETWEEN THE WHEELS OF THE ROLLING ICE BINS. PC TO STRAP DRAINS TO FLOOR WITH UNISTRUT OR SIMILAR.
3. ALL EXPOSED WATER LINES ARE TO BE RIGID COPPER.
4. ALL SHUT OFF VALVES ARE TO BE COLORED BALL VALVES (DOMESTIC-BLUE, HOT-RED, FILTERED-WHITE) AND LABELED FOR EACH PIECE OF EQUIPMENT THAT IT SUPPLIES. NO ANGLE STOPS.

WATER PRESSURE CALCULATION

STATIC PRESSURE		60.0
PRESSURE DROP THRU FRICTION LOSS FROM MAIN TO METER (12" WATER LINE)		0.0
PRESSURE DROP THRU METER		5.0
PRESSURE DROP THRU FRICTION LOSS FROM METER TO BACKFLOW		5.2
PRESSURE DROP THRU BACKFLOW AND STRAINER		15.0
PRESSURE DROP DUE TO ELEVATION TO PUMP		4.3
PRESSURE AVAILABLE @ PUMP		22.5
PRESSURE AVAILABLE AFTER PUMP		57.5
PRESSURE NEEDED AT FIXTURES		35.0
PRESSURE DROP DUE TO ELEVATION		4.0
REMAINING PRESSURE		26.5
SYSTEM LENGTH		150
EQUIVALENT PIPE LENGTH	187.50FT	
ALLOWABLE LOSS PER 100FT OF PIPE:	26.5PSI X 100FT / 187.50 FT	14.1

FIXTURE UNITS DOMESTIC WATER

FIXTURES	QUANTITY	COLD WATER	HOT WATER
HAND SINK	2	2	2
LAVATORY	1	1	1
WATER CLOSET	1	3	0
3-COMP	1	3	3
MOP SINK	1	3	3
WATER DISPENSER	4	4	0
ESPRESSO MACHINE (3 MACHINE GROUP)	4	12	0
ICE MAKER	1	1	0
RAPID RINSE	5	5	0
TOTAL		34	9
GPM		20	9

FORMULA FOR SIZING GREASE INTERCEPTORS

INTERIOR/EXTERIOR IN-FLOOR GREASE INTERCEPTORS

Length X Width X Depth/231= Gallons X .75 Fill Factor X Number of Compartments= Size of Grease Interceptor (GPM)

Discharge from 3-Compartment Sink
Compartment Deminsions:
16" X 14" X 14" / 231 = 20 X .75 Fill Factor X 3 Compartments = 31 Gal

Total GPM / Retention Time
31 Gal / 1 Min = 31 GPM GREASE WASTE SIZE: 4"

FIXTURE	x	NUMBER OF FIXTURES	x	FIXTURE VALUE UNIT	=	TOTAL FIXTURES UNITS	/	2 DFU PER GPM	= FLOW RATING GPM
• FLOOR FIXTURES	x	6	x	3	=	18	/	2	= 9
HAND SINKS	x	2	x	2	=	4	/	2	= 2.0
SERVICE BASIN	x	1	x	3	=	3	/	2	= 1.5
TOTAL REQUIRED FLOW RATING GPM									= 43.5

• FLOOR SINKS RECEIVING DISCHARGE FROM COMPARTMENT SINK(S), NOT COUNTED. REFER TO VOLUME CALCULATION FOR SINKS IN THIS TABLE.

DUTCH BROS COFFEE

CORALIC ARCHITECTURE

ARCHITECT
CORALIC, LLC
EDIN CORALIC
9700 MACKENZIE ROAD, STE 222
ST. LOUIS, MO 63123
p: 314.578.4953
edin@coralicarchitecture.com

STRUCTURAL ENGINEER
JAMES C. KREHER
JIM KREHER
208 N. MAIN STREET,
COLUMBIA, IL 62236
p: 618.281.8505
jimk@kreherengineering.com

MEP ENGINEER
Case Engineering
DARRELL R. CASE
796 MERUS CT.,
FENTON, MO 63026
T. 636.349.1600 F. 636.349.1730
dcase@caseengineeringinc.com

10.11.2021

STATE OF MISSOURI
DARRELL R. CASE
NUMBER PE-23363
PROFESSIONAL ENGINEER

Project No: MO0102
Dutch Bros Coffee - New Freestanding Store
500 NW Chipman Road. Lee's Summit, Missouri 64086
for: Dutch Bros Coffee
110 SW 4th St.
Grants Pass, OR 97526

ISSUED FOR PERMIT:
10.11.2021

REV:	DATE:	DESCRIPTION:

SHEET NAME:

PLUMBING SPECIFICATIONS & SCHEDULES

SHEET NUMBER:

P1.0

© 2020 DB Franchising USA, LLC

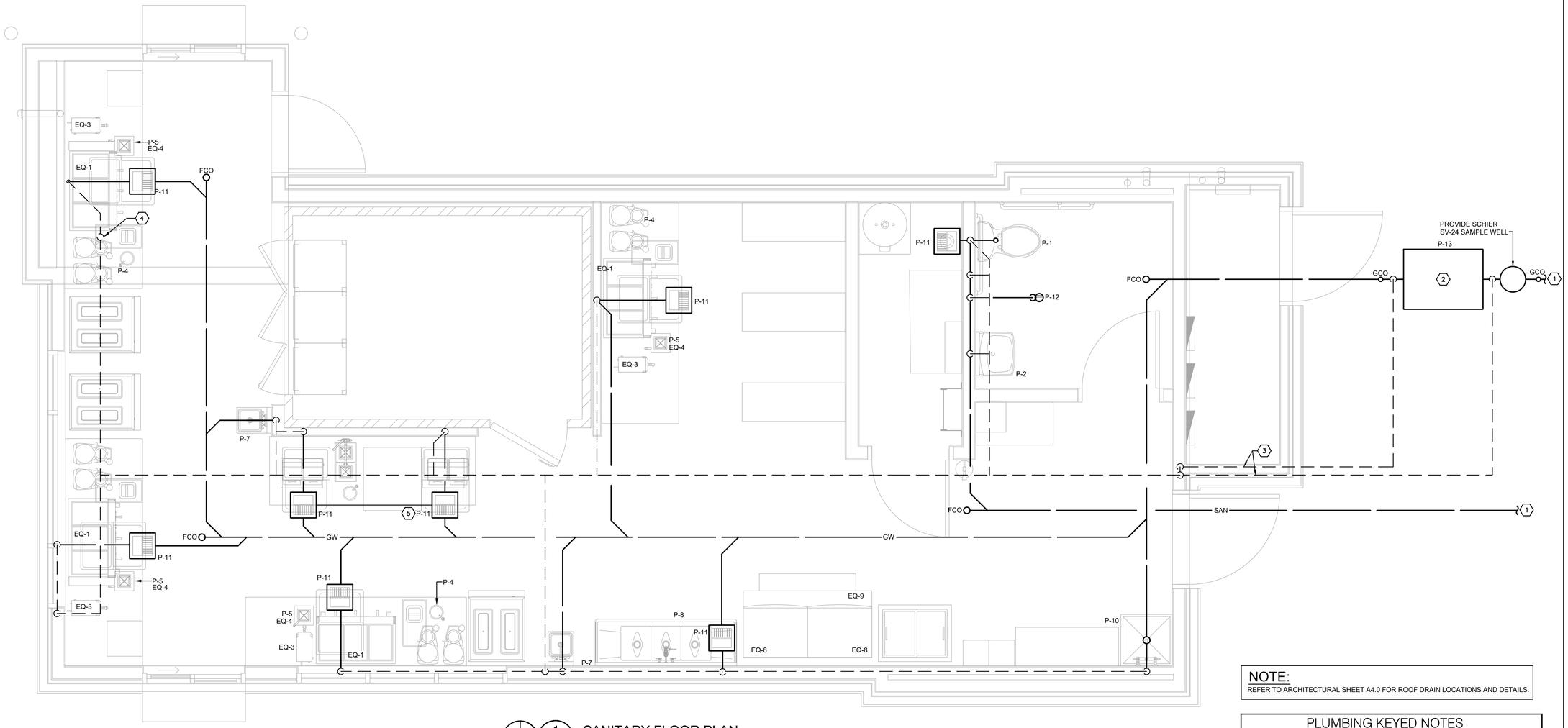

1 / P1.0 SANITARY FLOOR PLAN

SCALE: 1/2" = 1'-0"

COOLER/FREEZER CONDENSATE PIPING

CONDENSATE DRAIN PIPING IN FREEZER, PROVIDE TYPE "L" COPPER CONDENSATE DRAIN PIPING WITH 1-1/2" THICK FIBERGLASS INSULATION OVER ELECTRICAL HEAT TRACE (SUPPLIED AND INSTALLED BY ELECTRICAL CONTRACTOR). SEE ELECTRICAL DRAWINGS. ALL SURFACE MOUNTED PIPING SHALL BE INSTALLED ON 1" SPACER TO ALLOW FOR CLEANING.

CONDENSATE DRAIN DOWN TIGHT TO EXTERIOR WALL, DRAIN INDIRECTLY TO HD-1.

PVC CONDENSATE DRAINS INSIDE COOLERS AND COPPER CONDENSATE DRAIN IN FREEZER, FROM EVAPORATOR COILS, SLOPE 2% AND HOLD TIGHT TO COOLER WALL. ALL SURFACE MOUNTED PIPING SHALL BE INSTALLED ON 1" SPACER TO ALLOW FOR CLEANING.

NOTE:

REFER TO ARCHITECTURAL SHEET A4.0 FOR ROOF DRAIN LOCATIONS AND DETAILS.

PLUMBING KEYED NOTES

1. ROUTE TO CONNECT TO SITE SANITARY SEWER PIPING. VERIFY INVERT ELEVATION, LOCATION AND SIZE PRIOR TO ANY WORK. CONTACT ENGINEER IF ANY DISCREPANCIES ARE DISCOVERED. COORDINATE WITH LOCAL UTILITY COMPANY.
2. NEW SCHIER GB-50 50GPM BELOW-GRADE GREASE INTERCEPTOR. COORDINATE EXACT LOCATION WITH OWNER AND LOCAL AUTHORITIES IN FIELD PRIOR TO WORK. VERIFY EXACT LOCATION OF EXISTING SANITARY SEWER PIPING AND UTILITIES PRIOR TO ANY WORK. CONTACT ENGINEER IF ANY DISCREPANCIES ARE DISCOVERED.
3. VENT PIPING BELOW GRADE.
4. 4" VENT THROUGH ROOF LOCATION. MAINTAIN MINIMUM 10'-0" SEPARATION FROM OUTSIDE AIR INTAKE.
5. 3/4" CONDENSATE LINE FROM WALK IN COOLER TO DISCHARGE INDIRECTLY INTO NEARBY FLOOR DRAIN.

ARCHITECT
CORALIC, LLC
EDIN CORALIC
9700 MACKENZIE ROAD, STE 222
ST. LOUIS, MO 63123
p: 314.578.4953
edin@coralicarchitecture.com

STRUCTURAL ENGINEER
JAMES C. KREHER
JIM KREHER
208 N. MAIN STREET,
COLUMBIA, IL 62236
p: 618.281.8505
jimk@kreherengineering.com

MEP ENGINEER
Case Engineering
DARRELL R. CASE
796 MERUS CT.,
FENTON, MO 63026
T. 636.349.1600 F. 636.349.1730
dcase@caseengineeringinc.com

10.11.2021

STATE OF MISSOURI
DARRELL R. CASE
NUMBER PE-23303
PROFESSIONAL ENGINEER

Project No: MO0102

Dutch Bros Coffee - New Freestanding Store

500 NW Chipman Road. Lee's Summit, Missouri 64086
for: Dutch Bros Coffee
110 SW 4th St.
Grants Pass, OR 97526

ISSUED FOR PERMIT:
10.11.2021

REV:	DATE:	DESCRIPTION:

SHEET NAME:

PLUMBING WASTE/VENT FLOOR PLAN

SHEET NUMBER:

P2.0

© 2020 DB Franchising USA, LLC

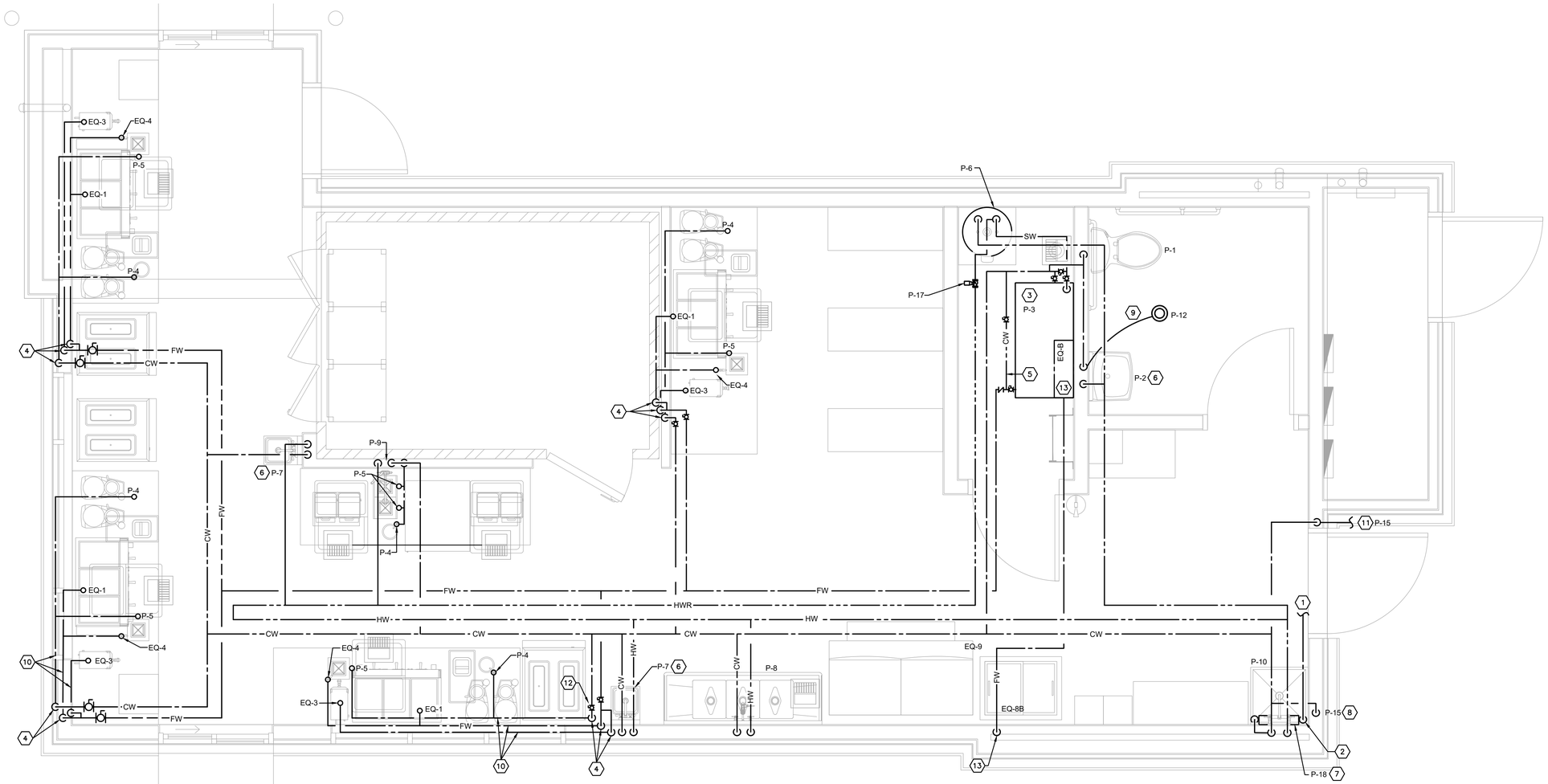

1 P1.0 WATER FLOOR PLAN

SCALE: 1/2" = 1'-0"

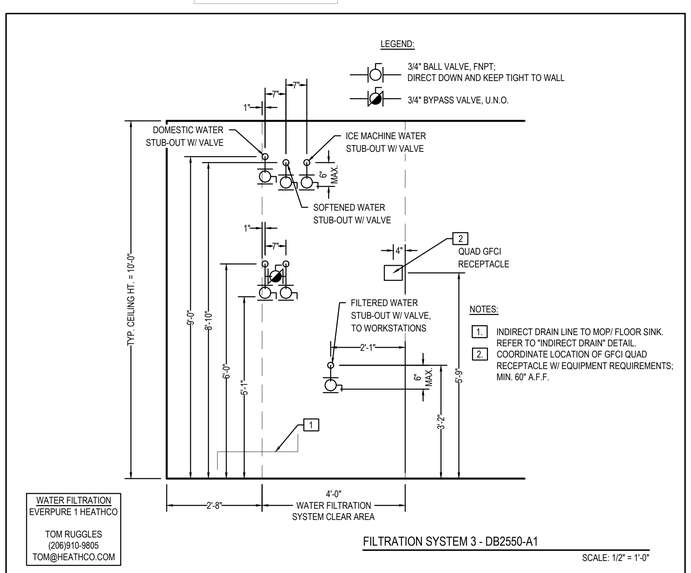

FILTRATION SYSTEM 3 - DB2550-A1

SCALE: 1/2" = 1'-0"

NOTE:
AN APPROVED BACKFLOW PREVENTION DEVICE IS REQUIRED FOR BEVERAGE MACHINES CONNECTED TO THE WATER SUPPLY PER 2015 IPC.

TANK-LESS WATER HEATERS SHALL BE NATIONALLY LISTED AND BE INSTALLED IN ACCORDANCE WITH THE INSTALLATION INSTRUCTIONS THAT WERE APPROVED AS PART OF THEIR LISTING. THE GAS PIPING SERVING THIS APPLIANCE MUST BE SIZED IN COMPLIANCE WITH THE WATER HEATER'S LISTED INSTALLATION INSTRUCTIONS PER 2015 IPC.

STUB-OUTS FOR COFFEE EQUIPMENT AT TABLE SHALL BE 24"A.F.F.

PLUMBING KEYED NOTES

1. ROUTE NEW 1" WATER PIPING TO CONNECT TO WATER METER AND MAIN. VERIFY EXACT SIZE AND LOCATION IN FIELD. VERIFY WITH WATER COMPANY AND LANDLORD EXACT CONNECTION, DELIVERY PRESSURE AND METER REQUIREMENTS PRIOR TO WORK. WATER PIPING SIZE BASED ON 52 PSI INCOMING STATIC WATER PRESSURE. PROVIDE PRESSURE REDUCING VALVE IF PRESSURE IS OVER 80 PSI. CONTACT ENGINEER IMMEDIATELY IF LOW PRESSURE (BELOW 60 PSI) OR DISCREPANCIES ARE FOUND FOR PIPING CHANGES.
2. PROVIDE WATTS LF009 BACKFLOW PREVENTER ABOVE MOP SINK. ROUTE RELIEF PIPES TO DISCHARGE INDIRECTLY TO MOP SINK.
3. WATER FILTRATION SYSTEM TO BE PROVIDED AND INSTALLED BY SELECTED WATER FILTRATION MANUFACTURER. PLUMBING CONTRACTOR TO INSTALL BYPASS PIPING TO WATER FILTRATION SYSTEM.
4. DROP 1/2" CW AND 1/2" FW LINES DOWN IN WALL ON WARM SIDE OF INSULATION TO BE RAN UNDER COUNTER TO SERVE FIXTURES.
5. PROVIDE FULL SIZED BYPASS VALVES FOR THE MAIN CW LINE SERVING THE WATER FILTRATION SYSTEM.
6. PROVIDE WATTS LFMMV MIXING VALVE FOR LAVATORY. SET OUTLET TEMPERATURE TO 110°.
7. INSTALL BOOSTER PUMP SYSTEM AS REQUIRED ON PLATFORM ABOVE MOP SINK. INSTALL PER MANUFACTURERS GUIDELINES, PROVIDE WITH ALL NECESSARY VALVES AND ACCESSORIES FOR A COMPLETE SYSTEM. COORDINATE EXACT INSTALLATION OF ALL SYSTEM COMPONENTS IN FIELD PRIOR TO ANY WORK AS DRAWING IS SHOWN DIAGRAMMATICALLY ONLY.
8. 1/2" COLD WATER DOWN TO FREEZE PROOF WALL HYDRANT.
9. COLD WATER DOWN FROM TRAP PRIMER TO FLOOR DRAIN. SEE DETAIL ON DRAWING P5.0 FOR MORE INFORMATION.
10. PIPING TO BE RAN LOW IN WALL BELOW WINDOW.
11. 1/2" COLD WATER LINE TO WALL HYDRANT (P-15) IN TRASH ENCLOSURE. IT IS THE CONTRACTORS RESPONSIBILITY TO DETERMINE THE PIPE/DISTANCE FOR FINAL CONNECTION.
12. PROVIDE NIBCO SERIES 585-70 BALL VALVE. (TYP.)
13. PROVIDE COLD WATER STUBOUT AT 72" AFF ABOVE FREEZER FOR ICE MAKER WATER FILTER.

DUTCH BROS COFFEE

CORALIC ARCHITECTURE

ARCHITECT
CORALIC, LLC
EDIN CORALIC
9700 MACKENZIE ROAD, STE 222
ST. LOUIS, MO 63123
p: 314.578.4953
edin@coralicarchitecture.com

STRUCTURAL ENGINEER
JAMES C. KREHER
JIM KREHER
208 N. MAIN STREET,
COLUMBIA, IL 62236
p: 618.281.8505
jimk@kreherengineering.com

MEP ENGINEER
Case Engineering
DARRELL R. CASE
796 MERUS CT.,
FENTON, MO 63026
T. 636.349.1600 F. 636.349.1730
dcase@caseengineeringinc.com

10.11.2021

STATE OF MISSOURI
DARRELL R. CASE
NUMBER PE-23363
PROFESSIONAL ENGINEER

Project No: MO0102

Dutch Bros Coffee - New Freestanding Store

500 NW Chipman Road, Lee's Summit, Missouri 64086
for: Dutch Bros Coffee
110 SW 4th St.
Grants Pass, OR 97526

ISSUED FOR PERMIT:
10.11.2021

REV:	DATE:	DESCRIPTION:

SHEET NAME:

PLUMBING SUPPLY FLOOR PLAN AND DETAILS

SHEET NUMBER:

P3.0

© 2020 DB Franchising USA, LLC

NOTE:
-1/2" STUBOUTS AT ALL ESPRESSO EQUIPMENT, TYP.
-1/2" ESPRESSO EQUIPMENT STUBOUTS AT 24" A.F.F.
-NO EXPOSED PEX LINES.

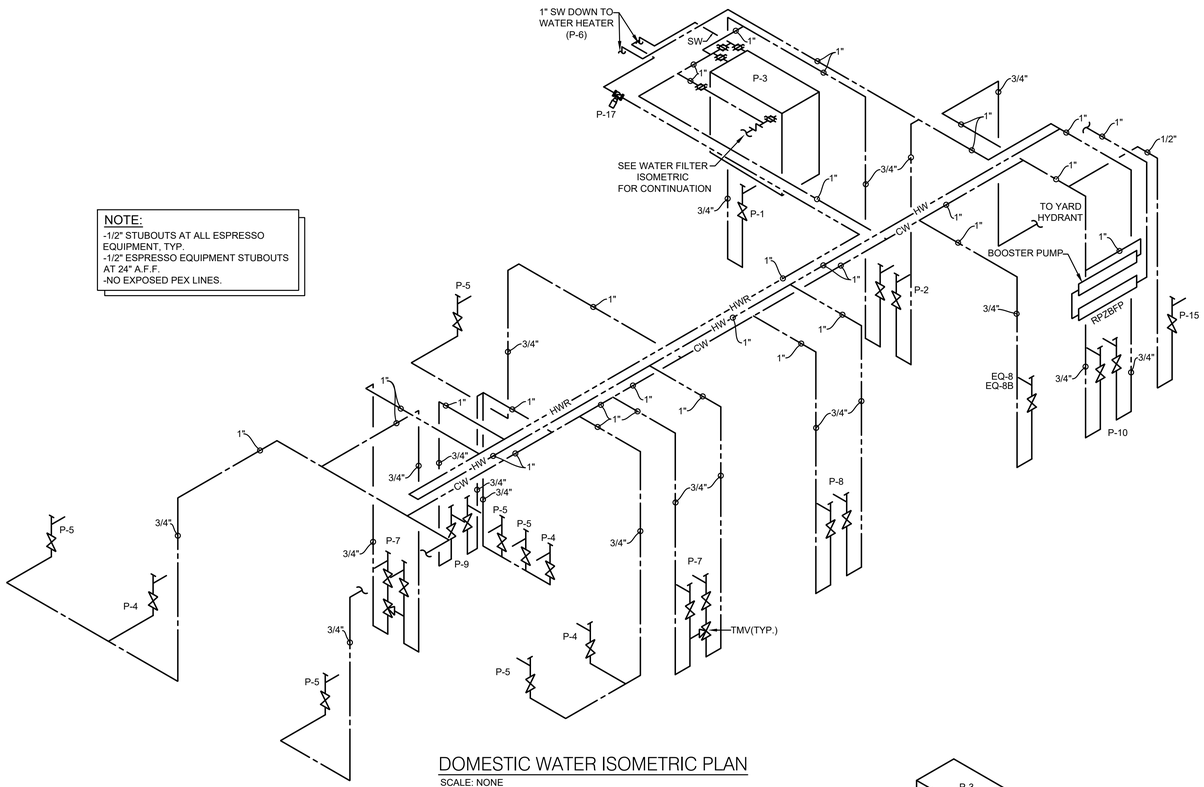

DOMESTIC WATER ISOMETRIC PLAN
SCALE: NONE

NOTE:
-1/2" STUBOUTS AT ALL ESPRESSO EQUIPMENT, TYP.
-1/2" ESPRESSO EQUIPMENT STUBOUTS AT 24" A.F.F.
-NO EXPOSED PEX LINES.

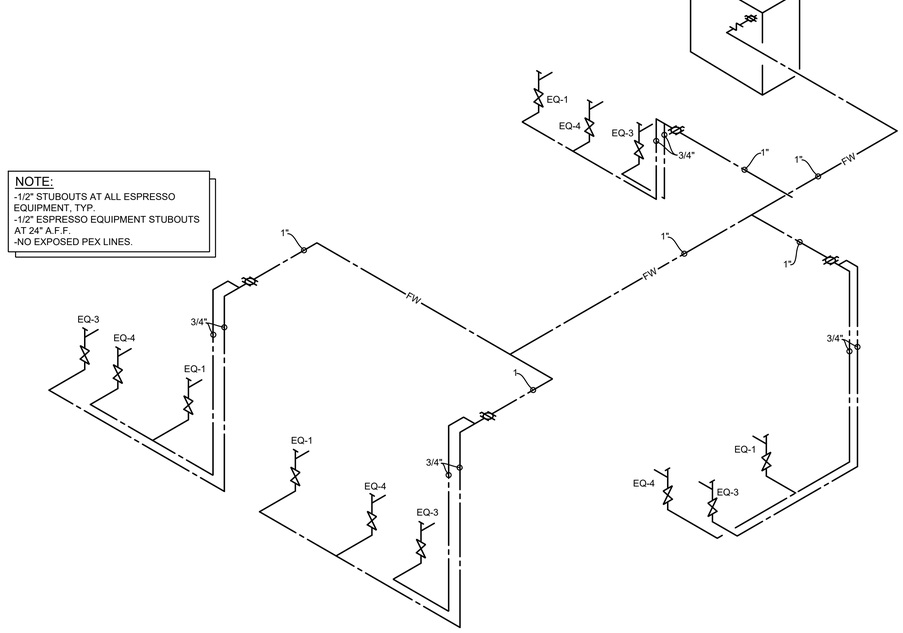

DOMESTIC FILTERED WATER ISOMETRIC PLAN
SCALE: NONE

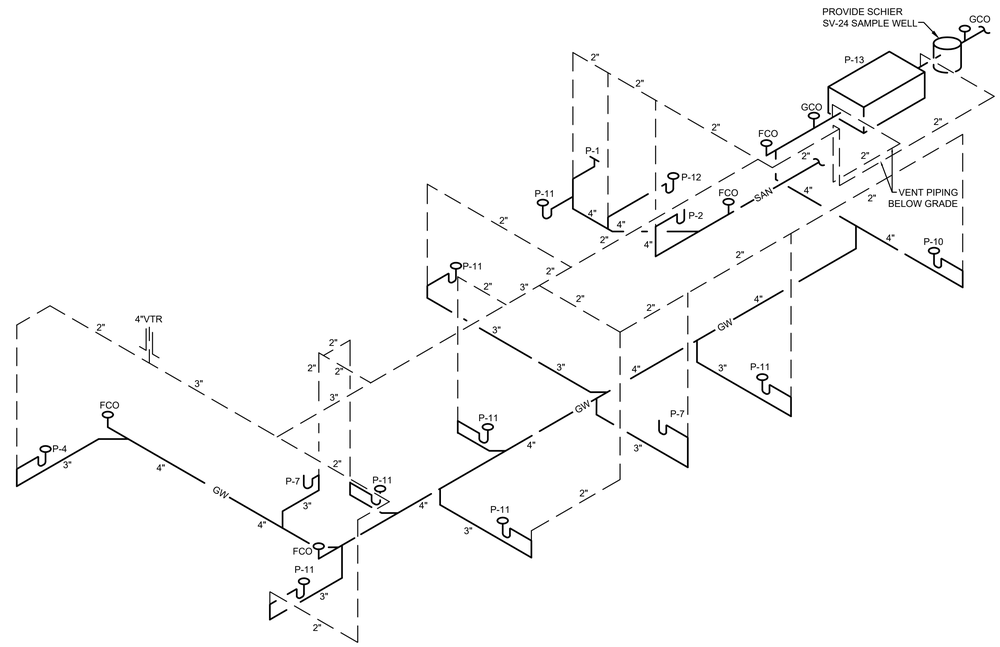

SANITARY ISOMETRIC PLAN
SCALE: NONE

DUTCH BROS COFFEE

CORALIC ARCHITECTURE

ARCHITECT
CORALIC, LLC
EDIN CORALIC
9700 MACKENZIE ROAD, STE 222
ST. LOUIS, MO 63123
p: 314.578.4953
edin@coralicarchitecture.com

STRUCTURAL ENGINEER
JAMES C. KREHER
JIM KREHER
208 N. MAIN STREET,
COLUMBIA, IL 62236
p: 618.281.8505
jimk@kreherengineering.com

MEP ENGINEER
Case Engineering
DARRELL R. CASE
796 MERUS CT.,
FENTON, MO 63026
T. 636.349.1600 F. 636.349.1730
dcase@caseengineeringinc.com

10.11.2021

STATE OF MISSOURI
DARRELL R. CASE
NUMBER PE-22303
PROFESSIONAL ENGINEER

Project No: MO0102
Dutch Bros Coffee - New Freestanding Store
500 NW Chipman Road, Lee's Summit, Missouri 64086
for: Dutch Bros Coffee
110 SW 4th St.
Grants Pass, OR 97526

ISSUED FOR PERMIT:
10.11.2021

REV:	DATE:	DESCRIPTION:

SHEET NAME:
PLUMBING ISOMETRICS

SHEET NUMBER:
P4.0

© 2020 DB Franchising USA, LLC

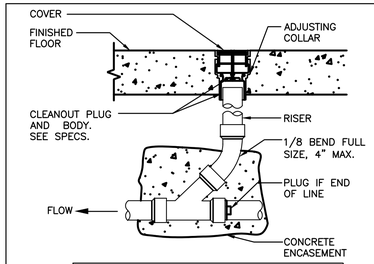

NOTE:
CLEANOUT COVER FLUSH WITH TILE OR FLUSH WITH CONCRETE FLOOR IN AREA WITH NO TILE.

FLOOR CLEAN–OUT DETAIL

SCALE: NTS

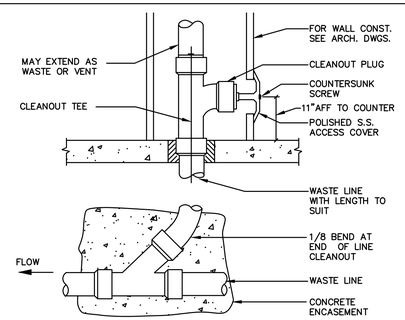

WALL CLEAN–OUT DETAIL

SCALE: NTS

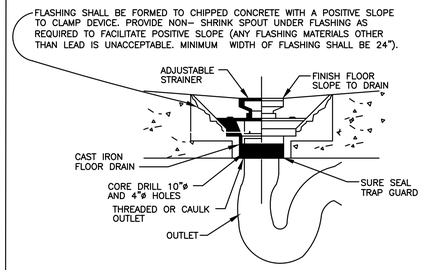

NOTE: THE GENERAL CONTRACTOR SHALL PROVIDE A ONE PIECE WATER PROOF MEMBRANE FLOOR AND BASE IN THE TOILET ROOM(S).

FLOOR DRAIN W/TRAP GUARD

SCALE: NTS

NOTE:
ALL EXPOSED PIPING SHALL BE CHROME PLATED

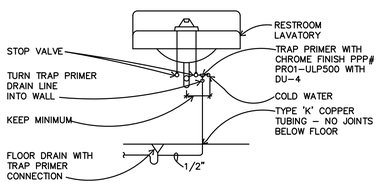

TRAP PRIMER PIPING DETAIL

SCALE: NTS

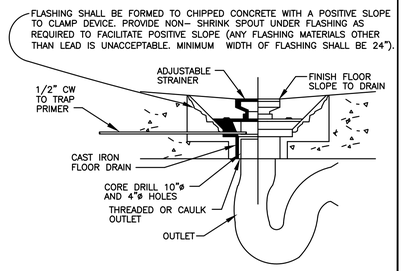

NOTE: THE GENERAL CONTRACTOR SHALL PROVIDE A ONE PIECE WATER PROOF MEMBRANE FLOOR AND BASE IN THE TOILET ROOM(S).

FLOOR DRAIN W/TRAP PRIMER

SCALE: NTS

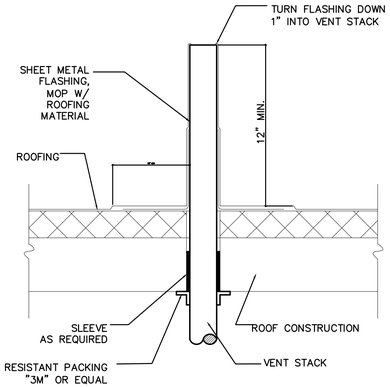

VENT TO ROOF DETAIL

SCALE: NTS

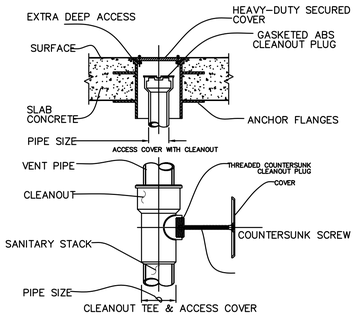

NOTE:
1. INSTALL CLEAN OUTS SO BOTTOM IS AT LEAST 7" ABOVE FINISHED FLOOR.

CLEAN–OUT DETAILS

SCALE: NTS

SPECIFICATION AND SUBMITTAL

GB-50 50 GPM Grease Interceptor for Indoor / Outdoor Use

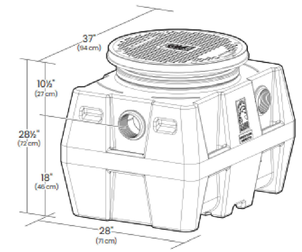

This unit is certified to ASME A112.14.3 (Type C) and CSA B481.1 and includes an internal flow control. External flow control with vent not required.

SUBMITTAL

Standard

Location: Indoor/Outdoor
Installation: Above/Below grade
Flow Rates / Grease Capacities: 50 GPM (3.2 L/s) / 249 lbs.
Solids Capacity: 12.5 gal.
Liquid Capacity: 52 gal.
Weight: 92 lbs.
Connections: 4" (100 mm) plain end
Cover: bolted gas/water tight composite with 16,000 lb. load rating

Options

- ☐ **PLAIN-EA-24:** 2" (50 mm) plain end fitting
- ☐ **PLAIN-EA-34:** 3" (75 mm) plain end fitting
- ☐ **FPT-EA-23:** 3" x 2" (75 mm x 50 mm) FPT fitting
- ☐ **FPT-EA-34:** 4" x 3" (100 mm x 75 mm) FPT fitting
- ☐ **C24HP:** H20 load rated pickable cast iron cover – 16,000 lbs.
- ☐ **CC2:** membrane clamping collar kit
- ☐ **PP2:** Pumpout Port
- ☐ **AKI:** High Water Anchor Kit

Field Cut Risers

- ☐ **SR24** 9" – 23" field cut riser
- ☐ **LR24** >23" – 38" field cut riser

Approval

Signature:	Date:	Company:
Specifying Engineer:	Engineering Firm:	

SCHIER LIFETIME GUARANTEED GREASE INTERCEPTORS

MODEL NUMBER:	DESCRIPTION: 50 GPM Polyethylene Grease Interceptor		
GB-50			
PART #: 4025-017-01	DWG BY: B. Karrer	DATE: 9/3/2019	REV:	ECO:

9500 Woodend Road | Edwardsville, KS 66111 | Tel: 913-951-3300 | www.schierproducts.com

© Copyright 2019 Schier, All Rights Reserved

Page 1 of 4

GREASE INTERCEPTOR DETAIL

SCALE: NTS

SPECIFICATION AND SUBMITTAL

SV24 Wastewater Sampling Port

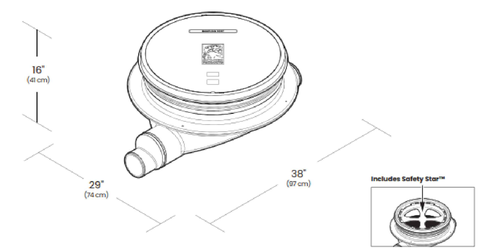

SUBMITTAL

Standard

Location: Indoor/Outdoor
Installation: Above/Below grade
Weight: 110 lbs.
Connections: 4" (100 mm) and 6" (150 mm) Plain End
Cover: cast iron cover, pickable 24" gas/water tight, H-20 rated, proof-load tested to 40,000 lbs.
Access Restrictor: Safety Star™ (450 lb. rating) built into each cover adapter

Options

- ☐ **C24H2:** composite cover, bolted 24" gas/water tight, traffic load rated for 16,000 lbs.
- ☐ **FCR2** >4" – 34" Field Cut Riser
- ☐ **FCR2** (x2) >34" – 64" Field Cut Risers
- ☐ **FCR2** (x3) >64" – 94" Field Cut Risers

Approval

Signature:	Date:	Company:
Specifying Engineer:	Engineering Firm:	

SCHIER

MODEL NUMBER:	DESCRIPTION: Polyethylene Wastewater Sampling Port		
SV24			
PART #: 8064-001-01	DWG BY: B. Karrer	DATE: 4/2/2020	REV:	ECO:

9500 Woodend Road | Edwardsville, KS 66111 | 913-951-3300 | schierproducts.com

© Copyright 2020 Schier, All Rights Reserved

GREASE INTERCEPTOR DETAIL

SCALE: NTS

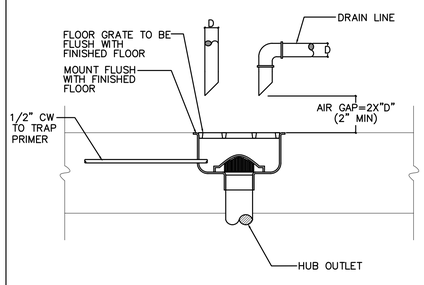

FLOOR SINK DETAIL

SCALE: NTS

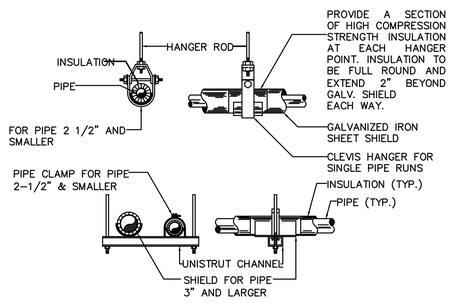

DOMESTIC WATER AND VENT PIPES SUPPORTS DETAIL

SCALE: NTS

DUTCH BROS COFFEE

CORALIC ARCHITECTURE

ARCHITECT
CORALIC, LLC
EDIN CORALIC
9700 MACKENZIE ROAD, STE 222
ST. LOUIS, MO 63123
p: 314.578.4953
edin@coralicarchitecture.com

STRUCTURAL ENGINEER
JAMES C. KREHER
JIM KREHER
208 N. MAIN STREET,
COLUMBIA, IL 62236
p: 618.281.8505
jimk@kreherengineering.com

MEP ENGINEER
Case Engineering
DARRELL R. CASE
796 MERUS CT.,
FENTON, MO 63026
T. 636.349.1600 F. 636.349.1730
dcase@caseengineeringinc.com

10.11.2021

STATE OF MISSOURI — DARRELL R. CASE — NUMBER PE-23363 — PROFESSIONAL ENGINEER

Project No: MO0102

Dutch Bros Coffee - New Freestanding Store

500 NW Chipman Road, Lee's Summit, Missouri 64086
for: Dutch Bros Coffee
110 SW 4th St.
Grants Pass, OR 97526

ISSUED FOR PERMIT:
10.11.2021

REV:	DATE:	DESCRIPTION:

SHEET NAME:

PLUMBING DETAILS

SHEET NUMBER:

P5.0

© 2020 DB Franchising USA, LLC

A. GENERAL NOTES
1. DRAWINGS AND GENERAL PROVISIONS OF THE CONTRACT, INCLUDING GENERAL AND SUPPLEMENTARY CONDITIONS AND ALL OTHER SPECIFICATION SECTIONS, APPLY TO ALL SECTIONS OF DIVISION 15000.
2. THE CONTRACTOR FOR THIS DIVISION OF WORK IS REQUIRED TO READ THE SPECIFICATIONS AND REVIEW THE DRAWINGS FOR ALL DIVISIONS OF WORK PRIOR TO BEGINNING WORK AND IS RESPONSIBLE FOR THE COORDINATION OF HIS/HER WORK AND THE WORK OF HIS/HER SUBCONTRACTORS WITH ALL DIVISIONS OF WORK TO AVOID INTERFERENCE AND CONFLICTS. IT IS THIS CONTRACTOR'S RESPONSIBILITY TO PROVIDE HIS/HER SUBCONTRACTORS WITH COMPLETE SETS OF BID DOCUMENTS.
3. THIS CONTRACTOR IS RESPONSIBLE FOR SCHEDULING THE COMPLETION AND INSPECTION OF HIS/HER WORK AND THE WORK OF HIS/HER SUBCONTRACTORS TO COMPLY WITH THE SCHEDULE.
4. THIS CONTRACTOR SHALL VISIT THE SITE PRIOR TO SUBMITTAL OF BID TO DETERMINE CONDITIONS AFFECTING THE WORK. ANY ITEMS WHICH ARE NOT COVERED IN THE BID DOCUMENTS OR ANY PROPOSED SUBSTITUTIONS SHALL BE LISTED SEPARATELY AND QUALIFIED IN THE CONTRACTORS BID. SUBMITTAL OF A BID SHALL SERVE AS EVIDENCE OF KNOWLEDGE OF EXISTING CONDITIONS AND ANY MODIFICATIONS WHICH ARE REQUIRED TO MEET THE INTENT OF THE DRAWINGS AND SPECIFICATIONS SHALL BE INCLUDED. FAILURE TO VISIT THE SITE DOES NOT RELIEVE THE CONTRACTOR OF HIS/HER RESPONSIBILITY IN PERFORMANCE OF WORK

B. GENERAL REQUIREMENTS:
1. THIS CONTRACTOR SHALL PROVIDE ALL LABOR, MATERIALS, EQUIPMENT, SERVICES, TOOLS, TRANSPORTATION, AND FACILITIES NECESSARY TO PROVIDE A COMPLETE HVAC, PLUMBING, FIRE PROTECTION SYSTEM AS SHOWN ON THE DRAWINGS, CALLED FOR IN THE SPECIFICATIONS AND AS REQUIRED BY JOB CONDITIONS. ALL WORK NECESSARY AND NOT SPECIFICALLY NOTED TO BE PROVIDED BY OTHERS SHALL BE PROVIDED BY THIS CONTRACTOR.
2. ALL WORK SHALL BE PERFORMED IN A NEAT, PROFESSIONAL MANNER USING GOOD CONSTRUCTION PRACTICES.
3. UNLESS SPECIFICALLY NOTED OTHERWISE, MATERIALS, PRODUCTS AND EQUIPMENT, INCLUDING ALL COMPONENTS THEREOF, SHALL BE NEW, TESTED, LISTED AND SIZED IN CONFORMITY WITH REQUIREMENTS OF STATE AND LOCAL CODES, WHICHEVER IS MORE STRINGENT.
4. ALL WORK SHALL BE INSTALLED SO AS TO BE READILY ACCESSIBLE FOR OPERATING, SERVICING, MAINTAINING AND REPAIRING. THIS CONTRACTOR IS RESPONSIBLE FOR PROVIDING SUFFICIENT SERVICE ACCESS TO ALL EQUIPMENT.
5. FIELD MEASURE AND VERIFY REQUIREMENTS FOR EXACT DIMENSION'S. OFFSETS AND ADDITIONAL ELBOWS REQUIRED TO SUIT SITE CONDITIONS ARE CONSIDERED PART OF THE SCOPE.

C. CODES
1. ALL WORK SHALL COMPLY WITH 2015 INTERNATIONAL PLUMBING CODE ORDINANCES AND OTHER STATE, COUNTY, CITY AND LOCAL CODES AND ORDINANCES, SAFETY AND HEALTH CODES, NFPA CODES, ENERGY CODES AND ALL OTHER APPLICABLE CODES AND REQUIREMENTS. THIS CONTRACTOR SHALL INQUIRE INTO AND COMPLY WITH ALL APPLICABLE CODES, ORDINANCES, AND REGULATIONS. THIS CONTRACTOR SHALL INCLUDE IN THE BID ANY CHANGES REQUIRED BY CODES AND IF THESE CHANGES ARE NOT INCLUDED IN THE BID, THEY MUST BE QUALIFIED AS A SEPARATE LINE ITEM IN THE BID. AFTER CONTRACT IS ISSUED, NO ADDITIONAL COST DUE TO CODE ISSUES SHALL BE REIMBURSED TO THE CONTRACTOR.

D. LICENSES, PERMITS AND INSPECTION FEES
1. THIS CONTRACTOR SHALL OBTAIN AND PAY FOR ALL LICENSES, PERMITS, INSPECTIONS AND FEES REQUIRED OR RELATED TO DIVISION 15000 WORK.
2. FURNISH TO THE (OWNER) ALL CERTIFICATES OF INSPECTION AND FINAL INSPECTION APPROVAL AT COMPLETION OF PROJECT.

E. GUARANTEE
1. THIS CONTRACTOR SHALL GUARANTEE ALL MATERIALS AND WORK PROVIDED UNDER HIS/HER CONTRACT AND SHALL MAKE GOOD, REPAIR OR REPLACE AT HIS/HER OWN EXPENSE, ANY DEFECTIVE WORK, MATERIAL OR EQUIPMENT DISCOVERED WITHIN A PERIOD OF 12 MONTHS FROM THE DATE OF ACCEPTANCE (IN WRITING) OF THE INSTALLATION. EXTENDED WARRANTIES ARE AS SPECIFIED WITH INDIVIDUAL EQUIPMENT.
2. THE HOT WATER HEATERS SHALL BE FURNISHED WITH A 5 YEAR HEAT EXCHANGER WARRANTY.

F. PHASING REQUIREMENTS (IF APPLICABLE)
1. THIS CONTRACTOR SHALL INCLUDE IN THE BID ALL NECESSARY SERVICE REQUIRED TO KEEP THE OPERATING PORTION OF THE BUILDING'S (HVAC, PLUMBING AND SPRINKLER) SERVICES IN OPERATION. CONTRACTOR MUST SCHEDULE IN WRITING ONE WEEK PRIOR TO ANY SHUT DOWN OF (THE HVAC, PLUMBING OR FIRE PROTECTION) SYSTEMS
2. THIS CONTRACTOR SHALL BE RESPONSIBLE FOR THE COORDINATION OF THE DEMOLITION OF EXISTING WORK AND THE RENOVATION WORK. COORDINATE WITH THE OTHER CONTRACTORS ANY EXISTING EQUIPMENT REQUIRED TO BE LEFT INTACT. THIS CONTRACTOR SHALL INCLUDE AND WILL BE HELD RESPONSIBLE FOR, THE REMOVAL OF ALL EXISTING (FIRE PROTECTION SYSTEMS, PLUMBING FIXTURES, PIPING SYSTEMS, HVAC UNITS, REFRIGERANT RECAPTURE, EXHAUST FANS). AND ASSOCIATED ROOF CURBS OR RAILS NOT TO BE REUSED ON THIS PROJECT, UNLESS SPECIFICALLY NOTED OTHERWISE. CONTRACTOR SHALL VERIFY ALL PRESUMED ABANDONED (EQUIPMENT, PIPES, DUCTWORK AND EQUIPMENT) PRIOR TO REMOVAL. ROOF CURBS SHALL BE REMOVED AND THE ROOF PATCHED. ALL EXTRANEOUS ITEMS IN THE SPACE, ASSOCIATED WITH THE SPACE, OR ON THE ROOF NOT APPLICABLE TO THE NEW WORK MUST BE REMOVED AND ROOF/WALL/FLOOR PATCHED/REPAIRED TO MATCH EXISTING SURROUNDINGS. EXISTING ABANDONED (PIPES, DUCTS OR EQUIPMENT) IN THE FLOOR, EMBEDDED IN CONCRETE, OR OTHERWISE INACCESSIBLE ARE TO BE CUT OFF AND SEALED BELOW OR WITHIN THE FLOOR OR WALL WHEN THEY ARE NOT TO BE REUSED IN THIS PROJECT. IF REQUIRED BY CODES, ABANDONED (PIPING AND/OR DUCTWORK) MUST BE REMOVED TO POINT OF ORIGIN. CONFIRM THE EXTENT OF DEMOLITION PRIOR TO BID AND INCLUDE IN BID PROPOSAL.

G. SLEEVE
1. THIS CONTRACTOR SHALL PROVIDE SLEEVES TO PROTECT EQUIPMENT OR FACILITIES IN THE INSTALLATION. EACH SLEEVE SHALL EXTEND THROUGH ITS RESPECTIVE FLOOR, WALL OR PARTITION AND SHALL BE CUT FLUSH WITH EACH SURFACE EXCEPT SLEEVES THAT PENETRATE THE FLOOR, WHICH SHALL EXTEND 2" ABOVE THE FLOOR.
2. CONTRACTOR SHALL COORDINATE ANY CORE DRILLING OR CUTTING OF OPENINGS IN MASONRY FLOORS OR WALLS.
3. ALL SLEEVES AND OPENINGS THROUGH FIRE-RATED WALLS AND/OR FLOORS SHALL BE FIRE SEALED WITH CALCIUM SILICATE, SILICONE "RTV" FOAM, "3M" FIRE RATED SEALANTS OR EQUAL, SO AS TO RETAIN THEIR FIRE RATING.SLEEVES IN BEARING AND MASONRY WALLS, FLOORS, AND PARTITIONS SHALL BE STANDARD WEIGHT STEEL PIPE FINISHED WITH SMOOTH EDGES. FOR OTHER THAN MASONRY PARTITIONS, THROUGH SUSPENDED CEILINGS, OR FOR CONCEALED VERTICAL PIPING, SLEEVES SHALL BE NO. 22 U.S.G. GALVANIZED STEEL MINIMUM.

H. HANGERS
1. PROVIDE HANGERS AND SUPPORTS FOR ALL PIPING, DUCTWORK, AND EQUIPMENT IN ACCORDANCE WITH SMACNA, MSS, ASME, AND ASHRAE STANDARDS.
2. HANGERS SHALL INCLUDE ALL MISCELLANEOUS STEEL SUCH AS ANGLE IRON, BANDS, C-CLAMPS WITH RETAINING CLIPS, CHANNELS, HANGER RODS, ETC., NECESSARY FOR THE INSTALLATION OF WORK.
3. HANGERS SHALL BE FASTENED TO BUILDING STEEL, CONCRETE OR MASONRY. HANGING FROM METAL DECK IS NOT PERMITTED. HANGERS MUST BE ATTACHED TO UPPER CHORDS OF BAR JOISTS. WHERE INTERFERENCES OCCUR, AND IN ORDER TO SUPPORT (DUCTWORK OR PIPING) THE CONTRACTOR SHALL INSTALL TRAPEZE TYPE HANGERS OR SUPPORTS WHICH SHALL BE LOCATED WHERE THEY DO NOT INTERFERE WITH ACCESS TO FIRE DAMPERS, VALVES, AND OTHER EQUIPMENT.
4. HANGERS FOR ALL INSULATED PIPING SHALL BE SIZED AND INSTALLED FOR THE OUTER DIAMETER OF INSULATION. INSTALL 6" LONG SPLIT CIRCLE GALVANIZED SADDLE BETWEEN THE HANGER AND THE PIPE INSULATION. PROVIDE HIGH DENSITY INSULATION INSERT BETWEEN THE SADDLE AND THE PIPE.
5. HANGERS AND PIPING OF DISSIMILAR METALS SHALL BE DI-ELECTRICALLY SEPARATED.

I. DIRT AND DUST CONTROL
1. SCREEN OFF ALL AREAS WHERE CONSTRUCTION IS TO TAKE PLACE FROM THE AREAS TO REMAIN INHABITED. INHABITED AREAS SHALL REMAIN DUST AND DEBRIS FREE DURING CONSTRUCTION.
2. CLEAN ANY AREAS OUTSIDE DESIGNATED CONSTRUCTION AREA WHICH MAY HAVE BECOME SOILED DUE TO CONSTRUCTION.

J. EQUIPMENT, PIPING AND INSTALLATION
1. REFER TO PLANS FOR SCHEDULES OF EQUIPMENT AND FIXTURES. AMERICAN STANDARD, KOHLER AND CRANE ARE CONSIDERED ACCEPTABLE AS EQUALS.
2. MAINTAIN A MINIMUM CLEARANCE OF 6" BETWEEN PLUMBING PIPING AND EQUIPMENT AND ALL FIRE/SMOKE RATED WALLS.
3. INSTALL EQUIPMENT IN ACCORDANCE WITH MANUFACTURER'S WRITTEN INSTRUCTIONS. INSTALL UNITS LEVEL AND PLUMB, FIRMLY ANCHORED IN LOCATIONS INDICATED.
4. POTABLE WATER PIPING SHALL BE AS FOLLOWS:
   a. BELOW GRADE: TYPE 'K', ANNEALED TYPE TEMPERED COPPER TUBE FOR PIPE SIZES 2 INCHES AND SMALLER. BRAZE ALL JOINTS.
   b. ALL OTHER: TYPE 'L' DRAWN COPPER TUBE WITH WROUGHT COPPER FITTINGS AND 95-5 TIN-ANTIMONY SOLDER.
5. PIPING OF DISSIMILAR METALS SHALL BE DI-ELECTRICALLY SEPARATED.
6. FIELD VERIFY EXACT CONNECTION POINTS PRIOR TO SUBMITTING BID AND NOTIFY ENGINEER IF CONDITIONS ARE NOT AS SHOWN ON THE PLANS OR AS STATED IN THE SPECIFICATIONS. CONTRACTOR SHALL VERIFY THE OPERABILITY OF ENTIRE SYSTEM PRIOR TO TIE-IN AS FOLLOWS:
   c. SNAKE SANITARY FOR A DISTANCE OF 100 FEET AND REPORT ANY BLOCKAGE.
   d. TEST WATER PRESSURE TO INSURE MINIMUM PSI MATCHES MOST DEMANDING EQUIPMENT SUPPLIED.
7. INSULATE ALL HOT AND COLD WATER PIPING WITH 1" THICK (K=0.23 @ 75°F) FIBERGLASS PIPE INSULATION WITH AN ALL SERVICE JACKET TO MEET LOCAL CODES AND UL FLAME SPREAD AND SMOKE DEVELOPED RATING. INSTALL PER MANUFACTURER'S RECOMMENDATIONS.
8. INSULATE THE TRAP, SANITARY AND SUPPLY PIPES UNDER LAVATORIES WITH TRUEBRO MODEL 102W "HANDI LAV GUARD" INSULATION KIT OR EQUAL.
9. INSTALL ALL NECESSARY PIPE HANGERS, SADDLES, AND CARRIERS TO PROPERLY SUPPORT ALL PIPING AND FIXTURES. HANGERS SHALL SUIT TYPE OF PIPING PROVIDED AND BE SPACED AT A MAXIMUM SPAN OF 5 FEET.
10. FLUSH STERILIZE WATER SYSTEM IN ACCORDANCE WITH LOCAL CODES.
11. TEST ENTIRE PLUMBING SYSTEM IN ACCORDANCE WITH 2015 INTERNATIONAL PLUMBING CODE.
12. PROVIDE WATER METER AND REMOTE READER PER LOCAL UTILITIES REQUIREMENT, IF APPLICABLE.
13. CONDENSATE DRAIN: PROVIDE POLYVINYL CHLORINE (PVC) SCHEDULE 40 PLASTIC PIPE (TYPE (DWV) IN CONFORMANCE WITH STANDARD ASTM D2665.
14. VALVES: PROVIDE BALL VALVE NIBCO SERIES 585-70 FOR SHUT-OFF
15. PROVIDE ACCESS PANELS WHERE REQUIRED FOR OPERATION, MAINTENANCE AND BALANCING OR PLUMBING EQUIPMENT.
16. PROVIDE WATER HAMMER ARRESTORS AT EACH BRANCH LINE.

H. GAS PIPING
1. FURNISH AND INSTALL A COMPLETE GAS PIPING SYSTEM.
2. GAS LINES SHALL BE BLACK STEEL, SCHEDULE 40, ASTM A-53, WITH MALLEABLE THREADED FITTINGS FOR 2" AND SMALLER, AND WITH WELDED JOINTS FOR 2-1/2" AND LARGER.
3. FURNISH AND INSTALL A GAS COCK, DIRT LEG, AND UNION CONNECTION AT EACH PIECE OF EQUIPMENT.
4. PITCH PIPING AT A UNIFORM GRADE OF 1/4" IN 15 FEET UPWARD IN DIRECTION OF FLOW. SUPPORT PIPING EVERY 5 FEET, AS DETAILED ON DRAWINGS, OR BY STANDARD INDUSTRY PRACTICE, WHICHEVER IS MORE STRINGENT.
5. GAS PIPING EXPOSED ON ROOF SHALL BE PAINTED WITH RUST-INHIBITING PAINT.
6. GAS PIPING INSTALLED IN RETURN AIR PLENUMS SHALL BE SLEEVED AND VENTED OR WELDED IN ACCORDANCE WITH THE LOCAL GAS COMPANY, LOCAL CODE AND APPLICABLE NFPA 54 CODES.
7. TESTING AND PURGING OF GAS PIPING SHALL BE DONE PER THE REQUIREMENTS OF THE LOCAL GAS COMPANY, LOCAL CODES AND APPLICABLE NFPA CODES.
8. CONTACT AND COORDINATE GAS SERVICE, METER AND REGULATOR REQUIREMENTS WITH THE LOCAL GAS COMPANY PRIOR TO BID. INCLUDE INSTALLATION COST OF GAS METER AND REGULATOR IN BID.

I. LABELS/PIPE MARKERS
1. FURNISH AND INSTALL PIPE IDENTIFICATION MARKERS EVERY 5 FEET ON ALL PIPES INSTALLED UNDER THIS CONTRACT. MARKERS SHALL BE A MINIMUM OF 1-1/2" X 8" AND IDENTIFIED IN ACCORDANCE WITH THE BACKGROUND AND LETTER COLORS ISSUED BY THE AMERICAN NATIONAL STANDARDS INSTITUTE (ANSI). MARKERS SHALL BE MANUFACTURED BY CHAMPION AMERICA INC., BRADY, SETON, OR EQUAL.
2. PIPING SHALL BE IDENTIFIED AS FOLLOWS: CONDENSATE, REFRIGERANT LIQUID, REFRIGERANT SUCTION, AND DIRECTIONAL ARROWS. ALL IDENTIFICATIONS MUST BE VISIBLE AT EQUIPMENT.
3. VALVES SHALL BE TAGGED IN ACCORDANCE TO VALVE OPERATION SCHEMATIC.
4. LABEL ALL FILTERED SUPPLY STOPS.

J. STEEL FRAMING FOR SUPPORT
1. PROVIDE ALL NECESSARY STEEL FRAMING REQUIRED TO INSTALL ALL HVAC EQUIPMENT AS DESCRIBED OR IMPLIED ON THE DRAWINGS. ALL PENETRATIONS OF EXISTING STRUCTURE SHALL BE DONE AT THIS CONTRACTOR'S EXPENSE

K. SYSTEM START-UP
1. THIS CONTRACTOR SHALL INCLUDE AS A BASE, 2-HOURS OF START-UP TIME PLUS AN ADDITIONAL 2-HOURS OF START-UP TIME PER HVAC UNIT SHOWN ON DRAWINGS.

L. FINAL INSPECTIONS
1. ASIDE FROM NORMAL INTERIM INSPECTIONS OF WORK IN PLACE, THE ENGINEER SHALL BE NOTIFIED (IN WRITING) TO INSPECT THE FINISHED INSTALLATION UPON COMPLETION FOR COMPLIANCE WITH THE PLANS, SPECIFICATIONS AND CODES. THE INSTALLING CONTRACTOR SHALL BE RESPONSIBLE TO BRING ALL ITEMS REPORTED BY THE ENGINEER INTO COMPLIANCE

ARCHITECT
CORALIC, LLC
EDIN CORALIC
9700 MACKENZIE ROAD, STE 222
ST. LOUIS, MO 63123
p: 314.578.4953
edin@coralicarchitecture.com

STRUCTURAL ENGINEER
JAMES C. KREHER
JIM KREHER
208 N. MAIN STREET,
COLUMBIA, IL 62236
p: 618.281.8505
jimk@kreherengineering.com

MEP ENGINEER
Case Engineering
DARRELL R. CASE
796 MERUS CT.,
FENTON, MO 63026
T. 636.349.1600 F. 636.349.1730
dcase@caseengineeringinc.com

10.11.2021

STATE OF MISSOURI
DARRELL R. CASE
NUMBER PE-23303
PROFESSIONAL ENGINEER

Project No: MO0102
Dutch Bros Coffee - New Freestanding Store
500 NW Chipman Road, Lee's Summit, Missouri 64086
for: Dutch Bros Coffee
110 SW 4th St.
Grants Pass, OR 97526

ISSUED FOR PERMIT:
10.11.2021

REV:	DATE:	DESCRIPTION:

SHEET NAME:

PLUMBING SPECIFICATIONS

SHEET NUMBER:

P6.0

© 2020 DB Franchising USA, LLC