NEKTER - LEE'S SUMMIT, MO

SUMMIT AT WEST PRYOR

940 NW PRYOR ROAD, UNIT: G,
LEE'S SUMMIT, MISSOURI 64081

ANNOTATION SYMBOLS

DETAIL No. / REF DWG No.	DETAIL CALL OUT
SECTION No. / REF DWG No.	SECTION CALL OUT
A	GRID DESIGNATION
ELEVATION No. / REF DWG No.	ELEVATION REFERENCE EXTERIOR
ELEVATION No. / REF DWG No.	ELEVATION REFERENCE INTERIOR
ELEVATION NAME	SPOT ELEVATION
MATCH LINE SEE A201	MATCHLINE
KEYNOTE	STORE FRONT/CURTAIN WALL TAG
KEYNOTE	DOOR TAG
KEYNOTE	WINDOW TAG
KEYNOTE	SQUARE SHEET KEYNOTE
KEYNOTE	WALL TAG
REVISION	REVISION NOTE
TRUE NORTH / SITE NORTH	PLAN NORTH
SITE NORTH / NORTH	ISOMETRIC NORTH

PROJECT TEAM

TENANT:
RAYMOND ANDEN
5005 W 119TH STREET, SPACE #28
OVERLAND PARK, KS 66209
PHONE: (714) 287-5024
EMAIL: RANDEN@MYNEKTER.COM

ARCHITECT / MEP:
KINECTIC DESIGN
20381 LAKE FOREST DRIVE SUITE B16
LAKE FOREST PARK, CA 92630
PHONE: (951) 710-6334

ABBREVIATIONS

ABV	ABOVE
AC	ACOUSTICAL
A/C	AIR CONDITIONING
ACT	ACOUSTICAL TILE
ADJ	ADJACENT
AFF	ABOVE FINISHED FLOOR
ALT	ALTERNATE
AL	ALUMINUM
BD	BOARD
BLDG	BUILDING
BLK	BLOCK
BLKG	BLOCKING
BM	BEAM
BOT	BOTTOM
BUR	BUILT UP ROOFING
CAB	CABINET
CFT	CUBIC FOOT
CI	CAST IRON
CIPC	CAST-IN-PLACE CONCRETE
CIR	CIRCLE
CIRC	CIRCUMFERENCE
CLG	CEILING
CLR	CLEAR(ANCE)
CLS	CLOSURE
CM	CENTIMETER(S)
CMU	CONCRETE MASONRY UNIT
COL	COLUMN
CONC	CONCRETE
CONST	CONSTRUCTION
CONT	CONTINUOUS OR CONTINUE
CPT	CARPET(ED)
CT	CERAMIC TILE
CYD	CUBIC YARD
D	DRAIN
DBL	DOUBLE
DEMO	DEMOLISH, DEMOLITION
DET	DETAIL
DF	DOUGLAS FIR
DIA	DIAMETER
DIM	DIMENSION
DISP	DISPENSER
DR	DOOR
DS	DOWNSPOUT
DWG	DRAWING
DWR	DRAWER
E	EAST
EF	EXHAUST FAN
ELEC	ELECTRIC(AL)
ELEV	ELEVATOR
EQ	EQUAL
EQUIP	EQUIPMENT
EST	ESTIMATE
(E)	EXISTING
EXH	EXHAUST
EXT	EXTERIOR
FD	FLOOR DRAIN
FEC	FIRE EXTINGUISHER CABINET
FF	FINISHED FLOOR
FHC	FIRE HOSE CABINET
FL	FLOOR
FLUOR	FLUORESCENT
FDN	FOUNDATION
FOB	FACE OF BLOCK
FOC	FACE OF CONCRETE
FOF	FACE OF FINISH
FOM	FACE OF MASONRY
FOS	FACE OF STUDS
FOW	FACE OF WALL
FRMG	FRAMING
FRT	FIRE-RETARDANT
FTG	FOOTING
FUR	FURRED(ING)
GA	GAUGE
GALV	GALVANIZED
GD	GRADE, GRADING
GEN	GENERAL
GLU-LAM	GLUE LAMINATED BEAM
GYP BD	GYPSUM BOARD
HB	HOSE BIBB
HC	HOLLOW CORE
HD	HEAD
HDR	HEADER
HM	HOLLOW METAL
HORIZ	HORIZONTAL
HT	HEIGHT
HVAC	HESATING /VENTILATING/ AIR CONDITIONING
HWWD	HARDWOOD
1-HR	ONE-HOUR FIRE RESISTIVE RATING
2-HR	TWO-HOUR FIRE RESISTIVE RATING
ID	INSIDE DIAMETER
INT	INTERIOR
JAN	JANITOR
JST	JOIST
LAM	LAMINATE(D)
LAV	LAVATORY
LT	LIGHT
LTWT	LIGHTWEIGHT
LVR	LOUVER
MAT'L	MATERIAL(S)
MAX	MAXIMUM
MECH	MECHANIC(AL)
MED	MEDIUM
MFR	MANUFACTURE(R)
MIN	MINIMUM
MISC	MISCELLANEOUS
MLD'G	MOLDING, MOULDING
MIR	MIRROR
MTL	METAL
N	NORTH
(N)	NEW
NIC	NOT IN CONTRACT
NOM	NOMINAL
NTS	NOT TO SCALE
OC	ON CENTER(S)
OD	OUTSIDE DIAMETER
OFOI	OWNER FURNISHED OWNER INSTALLED
OFCI	OWNER FURNISHED CONTRACTOR INSTALLED
CFCI	CONTRACTOR FURNISHED CONTRACTOR INSTALLED
OPG	OVERHEAD OPENING
OPP	OPPOSITE
PAR	PARALLEL
PCF	POUNDS PER CUBIC FOOT
PERF	PERFORATE(ED)
PG	PAINT GRADE
PKG	PARKING
PLAM	PLASTIC LAMINATE
PLWO	PLYWOOD
PNL	PANEL
PSF	POUNDS PER SQUARE FOOT
PSI	POUNDS PER SQUARE INCH
PT	PAINT
PTN	PARTITION
PVNG	PAVEING
PVMT	PAVEMENT
QT	QUARRY TILE
RAD	RADIUS
RB	RUBBER BASE
RD	ROOF DRAIN
REF	REFERENCE
REFR	REFRIGERATOR
REG	REGISTER
RFNG	ROOFING
RH	ROOF HATCH
RFT	RAFTER
RM	ROOM
RO	ROUGH OPENING
ROS	ROUGH SAWN
ROW	RIGHT OF WAY
S	SOUTH
SC	SOLID CORE
SCH	SCHEDULE
SEC	SECTION
SF	SQUARE FEET
SHT	SHEET
SHTG	SHEATHING
SIM	SIMILAR
SKLT	SKYLIGHT
SPECS	SPECIFICATION(S)
SQ	SQUARE
SS	STAINLESS STEEL
STD	STANDARD
STL	STEEL
STOR	STORAGE
STRL	STRUCTURAL
SUSP	SUSPENDED
SYS	SYSTEM
T	TEMPERED
T&G	TONGUE AND GROOVE
THK	THICK(NESS)
TOC	TOP OF CONCRETE
TOP	TOP OF PARAPET
TR	TREAD
TOS	TOP OF SHEATHING
TOSL	TOP OF SLAB
TOST	TOP OF STEEL
TV	TELEVISION
TOW	TOP OF WALL
TYP	TYPICAL
U/C	UNDERCUT
UL	UNDERWRITER'S LABORATORIES
UNO	UNLESS NOTED OTHERWISE
V	VINYL
VCT	VINYL COMPOSITION
VEN	VENEER
VERT	VERTICAL
VEST	VESTIBULE
VTR	VENT THRU ROOF
W	WEST
WAINS	WAINSCOT
WC	WATER CLOSET
WD	WOOD
WDW	WINDOW
W/O	WITHOUT
WP	WATERPROOFING

PROJECT SUMMARY

SCOPE OF WORK:

TENANT IMPROVMENT OF NEKTER JUICE BAR IN A NEW CONSTRUCTION MIXED-USED BUILDING. INCLUDING BUT NOT LIMITED TO:

- NEW INTERIOR NON-BEARING PARTITIONS
- NEW POWER RECEPTACLES AND LIGHTING
- NEW MECHANICAL DISTRIBUTION
- NEW KITCHEN, PREP AREAS, AND WALK-IN COOLER
- NEW INTERIOR FINISHES
- NEW PLUMBING FIXTURES

APPLICABLE BUILDING CODES:

ALL PLANS AND WORK FOR THE PROJECT SHALL CONFORM TO THE REQUIREMENTS OF THE FOLLOWING CODES:

CODE EDITIONS

2018 INTERNATIONAL BUILDING CODE
2018 INTERNATIONAL PLUMBING CODE
2018 INTERNATIONAL MECHANICAL CODE
2018 INTERNATIONAL FUEL GAS CODE
2018 INTERNATIONAL FIRE CODE
2017 NATIONAL ELECTRICAL CODE
ICC/ANSI 117.1-2009, ACCESSIBLE AND USABLE BUILDINGS AND FACILITIES

DEFERRED APPROVALS

THE FOLLOWING SHALL BE DEFERRED SUBMITTALS UNDER SEPARATE PERMITS:

1. FIRE SPRINKLER
2. FIRE ALARM SYSTEM
3. EXTERIOR BUILDING SIGNAGE
4. WALK-IN COOLER PLAN AND CALCULATIONS

NOTES: CONTRACTOR TO PROVIDE DESIGN, ENGINEERING, AND PROCESSING THROUGH AGENCIES FOR APPROVAL ON DEFERRED SUBMITTALS.

BUILDING DATA

PARCEL NUMBER:	51-800-04-38-00-0-00-000
PROJECT LOCATION:	940 NW PRYOR ROAD, UNIT: G, LEE'S SUMMIT, MISSOURI 64081
CONSTRUCTION TYPE:	-
SPRINKLER:	YES
NUMBER OF STORIES:	-
OCCUPANCY:	B
REMODEL AREA:	797 S.F.
TOTAL OCCUPANT LOAD:	SEE SHEET G001
PARKING:	-

MISCELLANEOUS NOTES:

A. G.C. SHALL VISIT THE PERMISES AND VERIFY ALL EXISTING CONDITIONS PRIOR TO START OF CONSTRUCTION AND SHALL REPORT ALL DISCREPANCIES TO ARCHITECT.
B. G.C. SHALL CONFORM TO ALL REQUIREMENTS REGARDING CONSTRUCTION PROCEDURES, INSURANCE, ETC. AS SET FORTH BY THE LANDLORD.
C. SINGLE USE SUITE

SHEET INDEX

TITLE	
T001	TITLE SHEET
GENERAL	
G001	LIFE SAFETY PLAN
G002	GENERAL & ACCESSIBILITY NOTES
G003	GENERAL & ACCESSIBILITY NOTES
G004	ACCESSIBILITY STANDARDS AND DETAILS
G005	ACCESSIBILITY STANDARDS AND DETAILS
ARCHITECTURAL	
A101	SITE PLAN
A201	FLOOR PLAN
A202	REFLECTED CEILING PLAN
A301	INTERIOR ELEVATIONS
A401	ENLARGED RESTROOM PLAN & ELEVATIONS
A501	DOOR SCHEDULES & DETAILS
A601	MILLWORK PLAN, ELEVATIONS, AND DETAILS
A602	WALL ASSEMBLY DETAILS
A603	WALL AND MISCELLANEOUS DETAILS
A604	LAY-IN CEILING DETAILS
A605	GYPSUM BOARD CEILING
A606	MISCELLANOUS DETAILS
A701	EQUIPMENT/FIXTURE PLAN AND SCHEDULES
A801	ROOM FINISH PLAN AND SCHEDULE
MECHANICAL	
M001	MECHANICAL GENERAL NOTES
M002	MECHANICAL SPECIFICATIONS
M003	MECHANICAL SCHEDULES
M200	MECHANICAL FLOOR PLAN
M300	MECHANICAL DETAILS
PLUMBING	
P001	PLUMBING GENERAL NOTES
P002	PLUMBING SYMBOLS AND ABBREVIATIONS
P003	PLUMBING SPECIFICATION
P004	PLUMBING SCHEDULES
P200	PLUMBING FLOOR PLAN
P300	PLUMBING DETAILS
ELECTRICAL	
E001	SYMBOLS AND ABBREVIATIONS
E002	ELECTRICAL SPECIFICATIONS
E003	KITCHEN EQUIPMENT SCHEDULE
E201	LIGHTING PLAN
E301	POWER PLAN
E401	SINGLE LINE DIAGRAM
E501	INTERIOR LIGHTING COMPLIANCE CERTIFICATE
Grand total: 38	

VICINITY MAP

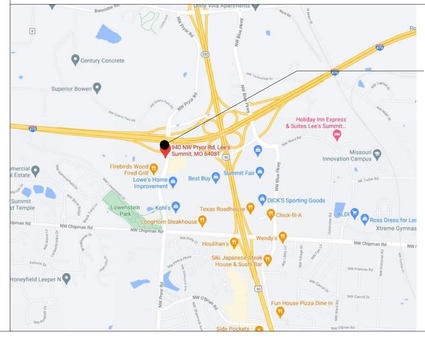

KD
Kinetic Design
20381 Lake Forest Dr. Suite B16
Lake Forest, CA. 92630
Main. 951.710.6334 Web. kineticdesign.build
Email. info@kineticdesign.build

STATE OF MISSOURI
JOHN C SCHNEIDER
NUMBER A-2012010034
ARCHITECT

STAMP DATE: 09/22/2021

NOT FOR CONSTRUCTION

THIS DRAWING IS PROVIDED FOR INFORMATIONAL PURPOSES ONLY. APPROVAL FROM THE ARCHITECT AND GOVERNING JURISDICTIONS MUST BE ATTAINED PRIOR TO THE ISSUANCE OF CONSTRUCTION DOCUMENTS. THE ARCHITECT AND HIS CONSULTANTS ASSUME NO RESPONSIBILITY FOR CONSTRUCTION BIDS OR CONSTRUCTION PERFORMED FROM THESE DRAWINGS.

REVISIONS

No.	DATE	DESCRIPTION
1	09-22-21	PCC #1, CLIENT AND LANDLORD REVISIONS

CLIENT INFORMATION

nektar JUICE BAR.

PROJECT NAME
NEKTER - LEE'S SUMMIT, MO
940 NW PRYOR ROAD, UNIT: G,
LEE'S SUMMIT, MISSOURI 64081

SHEET NAME
TITLE SHEET

DRAWN	CHECKED
DATE	09/22/21
SCALE	12" = 1'-0"
PROJECT NUMBER	
SHEET	T001

THESE DRAWINGS AND THE INFORMATION CONTAINED ON THEM ARE THE SOLE PROPERTY OF KINETIC DESIGN. ANY USE OF THESE DOCUMENTS OR THE INFORMATION CONTAINED HEREIN, CAN ONLY BE USED WITH WRITTEN PERMISSION FROM KINETIC DESIGN. KINETIC DESIGN ASSUMES NO LIABILITY FOR THESE DRAWINGS OR INFORMATION CONTAINED HEREIN.

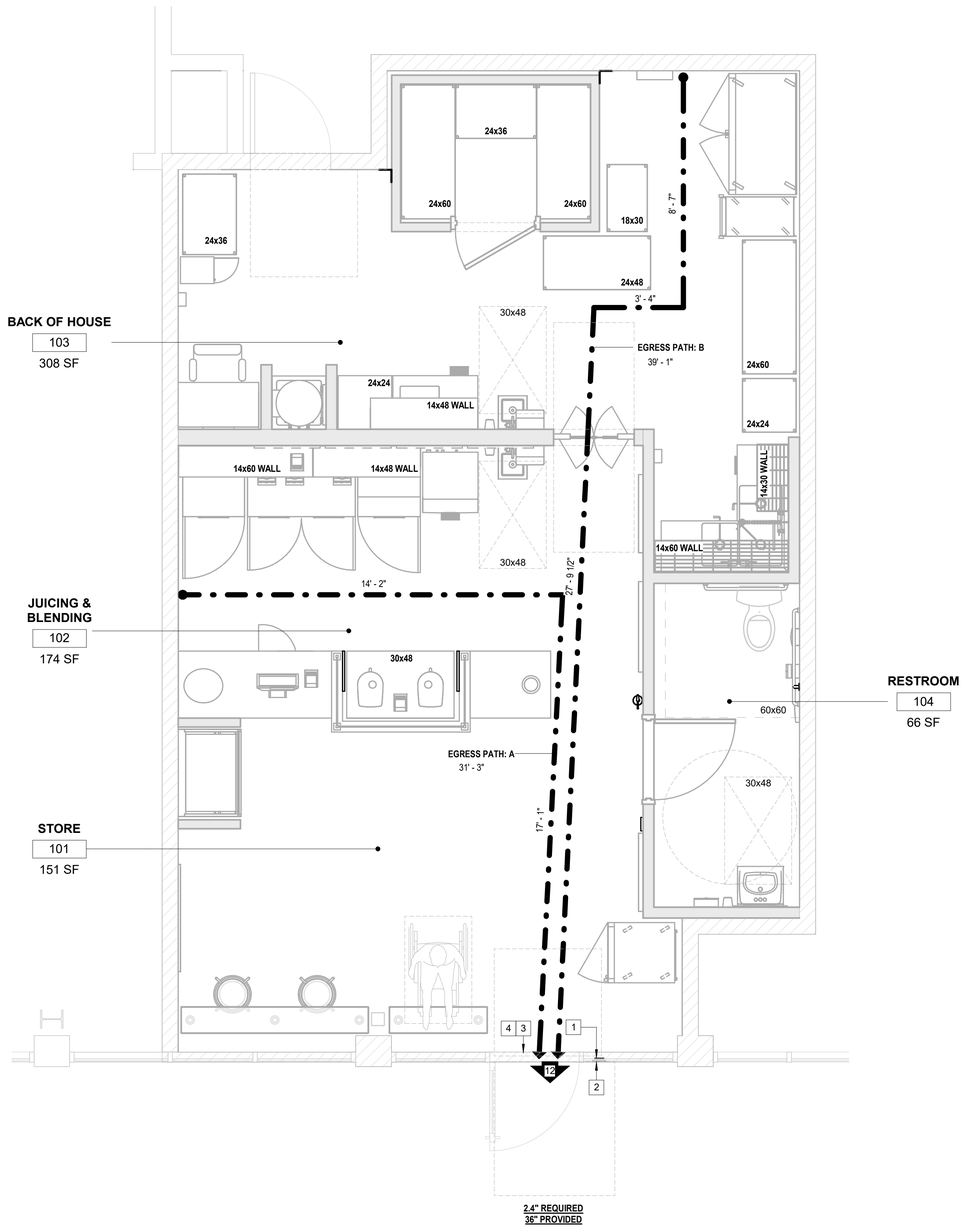

LEGEND

ROOM NAME
###
150 SF
ROOM TAG

AREA NOT IN CONTRACT

(E) DEMISING WALL, GC TO VERIFY THE EXISTING DEMISING WALL IS BUILT FLOOR TO DECK ABOVE. NOTIFY ARCHITECT IMMEDIATELY IF OTHERWISE.

(N) NON-RATED PARTITION WALL

(E) PARTITION WALL TO REMAIN

###
X" REQUIRED
X" PROVIDED
NUMBER OF PEOPLE EXITING

PER 2018 INTERNATIONAL BUILDING CODE, SECTION 1006 AND TABLE 1006.2.1, MAXIMUM COMMON PATH OF EGRESS TRAVEL DISTANCE WITH SPRINKLER SYSTEM IS 100 FEET FOR B OCCUPANCY. SEE PLAN FOR TRAVEL DISTANCE ON EACH AREA.

F.E.
TYPE K FIRE EXTINGUISHER REQUIRED;
FIRE EXTINGUISHERS FOR CLASS A FIRE HAZARDS
- ORDINARY HAZARD OCCUPANCY.
2-A RATED SINGLE EXTINGUISHER - THE MAXIMUM TRAVEL DISTANCE TO EXTINGUISHER IS 75 FEET
- TO BE MOUNTED AT 4'-0" HIGH FROM FINISH FLOOR TO HANDLE OF FIRE EXTINGUISHER

EXIT NOTES

1. EXIT SIGNS SHALL BE INTERNALLY ILLUMINATED.
2. EXIT SIGNS ILLUMINATED BY AN EXTERNAL SOURCE SHALL HAVE AN INTENSITY OF NOT LESS THAN 5 FOOT CANDLES (54 LUX).
3. INTERNALLY ILLUMINATED SIGNS SHALL BE LISTED AND LABELED AND SHALL BE INSTALLED IN ACCORDANCE WITH THE MANUFACTURER'S INSTRUCTIONS AND 2015 INTERNATIONAL BUILDING CODE CHAPTER 27.
4. EXIT SIGNS SHALL BE ILLUMINATED AT ALL TIMES (1013.5)
5. EXIT SIGNS SHALL BE CONNECTED TO AN EMERGENCY POWER SYSTEM THAT WILL PROVIDE AN ILLUMINATION OF NOT LESS THAN 90 MIN. IN CASE OF POWER LOSS (1013.6.3)
6. EGRESS DOORS SHALL BE READILY OPENABLE FROM THE EGRESS SIDE WITHOUT THE USE OF A KEY OR SPECIAL KNOWLEDGE OR EFFORT (1010.1.9)
7. DOOR HANDLES, LOCK AND OTHER OPERATING DEVICES SHALL BE INSTALLED AT A MINIMUM 34" AND A MAX. 48" ABOVE THE FINISHED FLOOR.
8. THIS DOOR TO REMAIN UNLOCKED WHEN BUILDING IS OCCUPIED.
9. ALL EGRESS DOOR OPERATION SHALL COMPLY WITH SECTION 1010.1.9-1010.1.9.12
10. THE MEANS OF EGRESS, INCLUDING THE EXIT DISCHARGE, SHALL BE ILLUMINATED AT ALL TIMES THE BUILDING SPACE SERVED BY THE MEANS OF EGRESS IS OCCUPIED.
11. THE MEANS OF EGRESS ILLUMINATION LEVEL SHALL NOT BE LESS THAN 1 FOOT CANDLE AT THE WALKING SURFACE.
12. THE POWER SUPPLY FOR MEANS OF EGRESS ILLUMINATION SHALL NORMALLY BE PROVIDED BY THE PREMISES' ELECTRICAL SUPPLY. IN THE EVENT OF POWER SUPPLY FAILURE, AN EMERGENCY ELECTRICAL SYSTEM SHALL AUTOMATICALLY ILLUMINATE THE FOLLOWING AREAS:
    a. AISLES AND UNENCLOSED EGRESS STAIRWAYS IN ROOMS AND SPACES THAT REQUIRE TWO OR MORE MEANS OF EGRESS.
    b. CORRIDOR, EXIT ENCLOSURES AND EXIT PASSAGEWAYS IN BUILDINGS REQUIRED TO HAVE TWO OR MORE EXITS.
    c. EXTERIOR EGRESS COMPONENTS AT OTHER THAN LEVEL OF EXIT DISCHARGE UNTIL EXIT DISCHARGE IS ACCOMPLISHED FOR BUILDINGS REQUIRED TO HAVE TWO OR MORE EXITS.
    d. INTERIOR EXIT DISCHARGE ELEMENTS, AS PERMITTED IN SECTION 1027.1IN BUILDINGS REQUIRED TO HAVE TWO OR MORE EXITS.
    e. EXTERIOR LANDINGS, AS REQUIRED BY SECTION 1010.1.6 FOR EXIT DOORWAYS THAT LEAD DIRECTLY TO THE EXIT DISCHARGE
13. EVERY SPACE INTENDED FOR HUMAN OCCUPANCY SHALL BE PROVIDED WITH NATURAL LIGHT BY MEANS OF EXTERIOR GLAZED OPENINGS IN ACCORDANCE WITH SECTION 1205.2 OR SHALL BE PROVIDED WITH ARTIFICIAL LIGHT IN ACCORDANCE WITH SECTION 1205.3. EXTERIOR GLAZED OPENINGS SHALL OPEN DIRECTLY ONTO THE PUBLIC WAY OR ONTO A YARD OR COURT IN ACCORDANCE WITH SECTION 1206.
14. THE MEANS OF EGRESS SYSTEM SHALL MAINTAIN A CLEAR CEILING HEIGHT OF 7'-6". MINIMUM.

KEYNOTES

#	KEYNOTE DESCRIPTION
1	(N) TACTILE EXIT SIGN, SEE DETAIL 10/G004
2	(N) INTERNATIONAL SYMBOL OF ACCESSIBILITY, SEE DETAIL 2/G004
3	PROVIDE THE FOLLOWING SIGN ABOVE DOOR: "THIS DOOR TO REMAIN UNLOCKED WHEN THIS SPACE IS OCCUPIED."
4	POST INTERIOR SIGNAGE STATING "MAXIMUM CAPACITY: 12 PERSONS"

OCCUPANT LOAD

ROOM NUMBER	ROOM NAME	ROOM AREA	LOAD FACTOR[a]	OCCUPANT LOAD	EXIT WIDTH REQUIRED[b]
101	STORE	151.48 SF	15 SF	10.10	2.02 in
102	JUICING & BLENDING	174.27 SF	200 SF	0.87	0.17 in
103	BACK OF HOUSE	308.04 SF	300 SF	1.03	0.21 in
104	RESTROOM	65.55 SF	0 SF		
				12.00	2.40 in

[a] PER TABLE 1004.5 OF 2018 INTERNATIONAL BUILDING CODE, MAXIMUM FLOOR AREA ALLOWANCES PER OCCUPANT

[b] PER SECTION 1005.3.2, MINIMUM WIDTH OF EGRESS COMPONENT = 12 x 0.2 = 2.4 in.
ACTUAL EGRESS WIDTH = 32 in > 2.4 in; .:. OKAY.

EGRESS PATH TOTAL

PATH OF EGRESS - RUN	TRAVEL DISTANCE
A	43' - 2"
B	27' - 9 1/2"

PER TABLE 1017.2 OF 2018 INTERNATIONAL BUILDNG CODE, MAXIMUM EXIT ACCESS TRAVEL DISTANCE FOR BUILDING = 300 FT (B OCCUPANCY, WITH SPRINKER SYSTEM), .:. OKAY.

PLUMBING FIXTURE CALCULATION

OCCUPANCY	DESCRIPTION	WATER CLOSET		LAVATORIES		MOP SINK
		MALE	FEMALE	MALE	FEMALE	
B	BUSINESS	1 PER 25 FOR FIRST 50		1 PER 40 FOR FIRST 80		
	REQUIRED	1[c]	1[c]	1[c]	1[c]	1[c]
	PROVIDED	1[d]		1[d]		1

[c] PER TABLE 2902.1 OF THE 2018 INTERNATIONAL BUILDING CODE, MINUMUM NUMBER OF REQUIRED PLUMBING FIXTURES

[d] PER EXCEPTION 2 OF SECTION 2902.2 OF THE 2018 INTERNATIONAL BUILDING CODE, SEPARATE FACILTIES ARE NTO REQUIRED.

LIFE SAFETY PLAN

Scale

THESE DRAWINGS AND THE INFORMATION CONTAINED ON THEM ARE THE SOLE PROPERTY OF KINETIC DESIGN. ANY USE OF THESE DOCUMENTS OR THE INFORMATION CONTAINED HEREIN, CAN ONLY BE USED WITH WRITTEN PERMISSION FROM KINETIC DESIGN. KINETIC DESIGN ASSUMES NO LIABILITY FOR THESE DRAWINGS OR INFORMATION CONTAINED HEREIN.

KD
Kinetic Design
20381 Lake Forest Dr. Suite B16
Lake Forest, CA. 92630
Main. 951.710.6334 Web. kineticdesign.build
Email. info@kineticdesign.build

STATE OF MISSOURI
JOHN C SCHNEIDER
NUMBER A-2012010034
ARCHITECT
STAMP DATE: 09/22/2021

NOT FOR CONSTRUCTION
THIS DRAWING IS PROVIDED FOR INFORMATIONAL PURPOSES ONLY. APPROVAL FROM THE ARCHITECT AND GOVERNING JURISDICTIONS MUST BE ATTAINED PRIOR TO THE ISSUANCE OF CONSTRUCTION DOCUMENTS. THE ARCHITECT AND HIS CONSULTANTS ASSUME NO RESPONSIBILITY FOR CONSTRUCTION BIDS OR CONSTRUCTION PERFORMED FROM THESE DRAWINGS.

REVISIONS

No.	DATE	DESCRIPTION
1	09-22-21	PCC #1, CLIENT AND LANDLORD REVISIONS

CLIENT INFORMATION

néktər JUICE BAR.

PROJECT NAME
NEKTER - LEE'S SUMMIT, MO
940 NW PRYOR ROAD, UNIT: G,
LEE'S SUMMIT, MISSOURI 64081

SHEET NAME
LIFE SAFETY PLAN

DRAWN
CHECKED
DATE 09/22/21
SCALE As indicated
PROJECT NUMBER
SHEET G001

ACCESSIBILITY NOTES

A. GENERAL

1. THE GENERAL CONDITIONS OF THE CONTRACT FOR CONSTRUCTION, A.I.A. STANDARD FORM A201 - CURRENT EDITION, ARE HEREBY INCORPORATED INTO THIS DOCUMENT EXCEPT AS SPECIFICALLY MODIFIED BELOW.

2. THE CONTRACTOR SHALL SECURE AND PAY FOR THE BUILDING PERMIT AND OTHER PERMITS AND GOVERNMENTAL FEES, LICENSES AND INSPECTIONS NECESSARY FOR PROPER EXECUTION AND COMPLETION OF THE WORK. SCHEDULING OF APPROVALS AND INSPECTIONS BY AUTHORITIES HAVING JURISDICTION (A.H.J.) OVER THE WORK IS THE RESPONSIBILITY OF THE CONTRACTOR.

3. THE CONTRACT DOCUMENTS CONVEY DESIGN INTENT AND THE GENERAL TYPE OF CONSTRUCTION DESIRED ARE INTENDED TO APPLY TO THE FINEST QUALITY OF CONSTRUCTION, MATERIAL AND WORKMANSHIP THROUGHOUT.

4. ANY ITEMS NOTED "BY OWNER" OR AS BEING PROVIDED BY OWNER IN THESE CONTRACT DOCUMENTS SHALL BE PROVIDED BY THE OWNER OR HIS VENDORS AND INSTALLED BY THE GENERAL CONTRACTOR OR HIS FORCES UNLESS EXPRESSLY NOTED AS BEING INSTALLED "BY OWNER" - REFER TO THE RESPONSIBILITY SCHEDULE FOR MORE INFORMATION. THE GENERAL CONTRACTOR SHALL BE RESPONSIBLE FOR PROVIDING ANY AND ALL ACCESSORY MATERIALS REQUIRED TO INSTALL SUCH ITEMS AND MAKE FINAL CONNECTIONS.

5. PRIOR TO SUBMITTING A PROPOSAL OR COMMENCEMENT OF WORK, THE CONTRACTOR SHALL VISIT THE PROJECT SITE TO COMPARE THE SCOPE OF WORK SHOWN ON THE DRAWINGS AND OTHER CONTRACT DOCUMENTS WITH EXISTING CONDITIONS. PROMPTLY REPORT ANY ERRORS, OMISSIONS, INCONSISTENCIES OR OTHER DETRIMENTAL CONDITIONS TO THE ARCHITECT. IF THE CONTRACTOR FAILS TO PERFORM THIS OBLIGATION, THE CONTRACTOR WILL BE RESPONSIBLE FOR ALL COSTS AND DAMAGES ASSOCIATED WITH ACTIONS REQUIRED TO CORRECT UNREPORTED CONDITIONS THAT OTHERWISE COULD HAVE BEEN AVOIDED.

6. IN THE EVENT THAT DISCREPANCIES ARE FOUND BETWEEN DRAWINGS AND/OR SPECIFICATIONS, THE CONTRACTOR SHALL REQUEST A CLARIFICATION FROM THE ARCHITECT IN WRITING. THE ARCHITECT'S RESPONSE TO THE CONTRACTOR'S REQUEST FOR INFORMATION SHALL NOT BE CAUSE FOR A CHANGE IN THE CONTRACT AMOUNT UNLESS IT IS AGREED THAT THE ORIGINAL SCOPE OF WORK HAS BEEN ALTERED BY THE RESPONSE.

7. ALL CONSULTANT DRAWINGS ARE SUPPLEMENTAL TO THE ARCHITECTURAL DRAWINGS. IT SHALL BE THE CONTRACTORS RESPONSIBILITY TO COORDINATE WITH THE ARCHITECTURAL DRAWINGS BEFORE THE INSTALLATION OF ANY OF THE CONSULTANTS WORK AND TO BRING ANY DISCREPANCIES OR CONFLICTS TO THE ARCHITECTS ATTENTION FOR CLARIFICATION. IMPROPERLY INSTALLED WORK SHALL BE CORRECTED BY THE GENERAL CONTRACTOR AT HIS EXPENSE AND AT NO EXPENSE TO THE ARCHITECT, THEIR CONSULTANTS OR THE OWNER.

8. GENERAL CONTRACTOR WILL COORDINATE ALL WORK WITH THE LANDLORD AND PERFORM WORK TO MEET ALL REQUIREMENTS OF THE LEASE AGREEMENT. CONTRACTORS WORK IS SUBJECT TO INSPECTION BY THE LANDLORD FOR COMPLIANCE WITH THE TERMS OF THE LEASE AGREEMENT.

9. PRIOR TO BEGINNING WORK, THE CONTRACTOR SHALL FURNISH A CONSTRUCTION SCHEDULE SHOWING THE CHRONOLOGICAL PHASES OF WORK, SCHEDULE OF VALUES, AND INSURANCE CERTIFICATE. THIS SCHEDULE SHALL INDICATE ORDERING LEAD TIMES, A BEGINNING AND END DATE FOR EACH PHASE AND A PROJECTED COMPLETION DATE FOR THE ENTIRE PROJECT.

10. THE CONTRACTOR IS WHOLLY RESPONSIBLE FOR THE COORDINATION AND SCHEDULING OF THE WORK EFFORTS FOR ALL ENGINEERS, SUBCONTRACTORS, CRAFTSMEN AND TRADESMEN REQUIRED TO COMPLETE THE JOB AND SHALL BE RESPONSIBLE FOR PROVIDING THEM WITH FULL SETS OF CURRENT DRAWINGS,ADDENDUM, AND OTHER SUPPLEMENTAL INFORMATION PERTINENT TO THE COMPLETION OF THE WORK.

11. CONTRACTOR SHALL COORDINATE THE INSTALLATION OF THE VARIOUS TRADE ITEMS WITHIN THE SPACE AND ABOVE THE CEILINGS (INCLUDING BUT NOT LIMITED TO, STRUCTURAL MEMBERS, CONDUITS, RACEWAYS, LIGHT FIXTURES, CEILING SYSTEM AND ANY SPECIAL STRUCTURAL SUPPORTS REQUIRED) AND SHALL BE RESPONSIBLE FOR MAINTAINING THE FINISH CEILING HEIGHT ABOVE THE FINISH FLOOR INDICATED IN THE DRAWINGS AND THE FINISH SCHEDULE.

12. THE CONTRACTOR SHALL PROVIDE TEMPORARY LIGHTING AND ELECTRICAL SERVICE FOR TRADES.

13. UNLESS OTHERWISE STIPULATED IN THE CONTRACT DOCUMENTS, THE CONTRACTOR SHALL BE RESPONSIBLE FOR THE PROVISION, STORAGE AND PAYMENT OF ALL LABOR, MATERIALS, TAXES, EQUIPMENT, TOOLS, CONSTRUCTION EQUIPMENT, MACHINERY, TRANSPORTATION AND OTHER FACILITIES NECESSARY FOR PROPER EXECUTION AND COMPLETION OF THE WORK WHETHER OR NOT IT IS SPECIFICALLY CALLED OUT OR DETAILED ON THE DRAWINGS.

14. THE CONTRACTOR WARRANTS TO THE OWNER THAT MATERIALS AND EQUIPMENT FURNISHED UNDER THE CONTRACT WILL MEET INDUSTRY STANDARDS AND BE NEW AND OF GOOD QUALITY UNLESS OTHERWISE PERMITTED BY THE CONTRACT DOCUMENTS. THE WORK WILL BE INSTALLED PER MANUFACTURER'S SPECIFICATIONS,FREE FROM DEFECTS AND WILL BE COMPLETED IN A NEAT AND WORKMANLIKE MANNER ACCEPTABLE TO THE OWNER.

15. THE CONTRACTOR SHALL PROMPTLY CORRECT IN A PROFESSIONAL MANNER, AT NO COST NO THE OWNER AND WITHOUT CHANGE IN CONTRACT TIME, ALL NON-CONFORMING OR DEFECTIVE WORK AND DAMAGES CAUSED BY HIS WORK OR WORKMEN WHETHER DISCOVERED BEFORE OR AFTER SUBSTANTIAL COMPLETION.

16. THE CONTRACTOR SHALL INSPECT ALL EQUIPMENT AND SYSTEMS FOR PROPER OPERATIONS UPON SUBSTANTIAL COMPLETION OF PROJECT.

17. THE CONTRACTOR SHALL THOROUGHLY CLEAN THE ENTIRE PROJECT SITE AND ADJACENT AFFECTED SPACES TO THE SATISFACTION OF THE OWNER.

18. THE GENERAL CONTRACTOR SHALL PROVIDE THE FOLLOWING REPORTS AND GUARANTEES TO THE OWNER OR OWNER'S REPRESENTATIVE:
    a. ELECTRICAL INSPECTOR'S CERTIFICATE OF COMPLIANCE WITH A.H.J. REQUIREMENTS.
    b. PLUMBING INSPECTOR'S CERTIFICATE OF COMPLIANCE WITH A.H.J. REQUIREMENTS
    c. FIRE MARSHALL'S CERTIFICATE OF COMPLIANCE WITH A.H.J. REQUIREMENTS.
    d. BUILDING INSPECTOR'S CERTIFICATE OF COMPLIANCE WITH A.H.J. REQUIREMENTS.
    e. HEALTH DEPARTMENT CERTIFICATE OF COMPLIANCE WITH A.H.J. REQUIREMENTS.
    f. A.H.J. CERTIFICATE OF OCCUPANCY.

B. DRAWING CONVENTIONS

1. DIMENSIONS TAKE PRECEDENCE OVER SCALE ON THE CONSTRUCTION DRAWINGS. NOTIFY THE ARCHITECT OF DISCREPANCIES BETWEEN DRAWING DIMENSIONS AND FIELD CONDITIONS.

2. PLAN DIMENSIONS ARE GIVEN TO FACE OF STUDS OR FACE OF EXISTING WALL OR FACE OF NEW FIRE-RATED WALL UNLESS OTHERWISE NOTED.

3. PARTITION THICKNESS IS DERIVED FROM DESCRIPTION OF THE PARTITION CONSTRUCTION AND/OR DESIGNATED DETAIL.

4. PARTITIONS THAT INTERSECT INTERIOR OR EXTERIOR GLAZED WALLS ARE TO CENTER ON MULLIONS AND PERPENDICULAR TO EXTERIOR WALL UNLESS DETAILED OTHERWISE.

5. UNLESS OTHERWISE NOTED, PARTITIONS AND OTHER ELEMENTS ON THE DRAWING THAT ARE DRAWN AT AN OBLIQUE ANGLE ARE TO BE CONSTRUCTED AT A 45-DEGREE ANGLE TO THE MAIN GRID.

6. WALLS SHOWN ALIGNED WITH BASE BUILDING STRUCTURE SHALL BE FLUSH AND SMOOTH WITH BASE BUILDING STRUCTURE UNLESS OTHERWISE NOTED.

7. UNLESS DIMENSIONED OTHERWISE, DEPTH OF FURRING ON COLUMNS AND OTHER ELEMENTS IS TO BE HELD TO THE MINIMUM THICKNESS REQUIRED TO CONCEAL MECHANICAL, PLUMBING OR ELECTRICAL COMPONENTS.

8. UNLESS OTHERWISE INDICATED, POSITION DOOR JAMBS 4" OFF THE FACE OF ADJACENT INTERSECTING PARTITIONS OR CENTER ON PARTITION.

9. OUTLETS THAT OCCUR ON OPPOSITE SIDES OF THE SAME PARTITION ARE TO BE STAGGERED HORIZONTALLY A MINIMUM OF 12" TO MINIMIZE SOUND TRANSMISSION.

FIRE DEPARTMENT NOTES

1. "K" RATED PORTABLE FIRE EXTINGUISHER(S) SHALL BE PROVIDED FOR THE KITCHEN AREA IF EQUIPPED WITH A COMMERCIAL HOOD SYSTEM.

2. MINIMUM 2A 10B:C FIRE EXTINGUISHERS SHALL BE PROVIDED. TRAVEL DISTANCE TO ANY EXTINGUISHER SHALL NOT EXCEED 75 FEET FROM ANY PORTION OF THE BUILDING. EXTINGUISHER(S) SHALL BE HUNG NO HIGHER THAN 44 INCHES MEASURED FROM THE FLOOR TO THE TOP OF THE EXTINGUISHER.

3. PLANS FOR ANY AUTOMATIC SPRINKLER SYSTEM (INCLUDING TENANT IMPROVEMENT WORK), HOOD SUPPRESSION SYSTEM AND/OR ALARM SYSTEM, SHALL BE SUBMITTED WITH FEES TO JURISDICTION FIRE DEPARTMENT FOR REVIEW AND APPROVAL PRIOR TO INSTALLATION.

4. PROVIDE FIRE SPRINKLERS FOR THE COVERED PATIO DINING AREA. NOTIFY SPRINKLER CONTRACTOR OF THIS REQUIREMENT.

5. PANIC HARDWARE: EACH DOOR IN A MEANS OF EGRESS FROM A GROUP A, OR ASSEMBLY AREA NOT CLASSIFIED AS AN ASSEMBLY OCCUPANCY , E, I-2 OR I-2.1 OCCUPANCIES HAVING AN OCCUPANT LOAD OF 50 OR MORE AND ANY GROUP H OCCUPANCY SHALL NOT BE PROVIDED WITH A LATCH OR LOCK UNLESS IT IS PANIC HARDWARE.

6. LOCKS AND LATCHES, SECTION 1008.1.9.3 ITEM 2: IN BUILDINGS IN OCCUPANCY GROUP A HAVING AN OCCUPANT LOAD OF 300 OR LESS, GROUPS B, F, M AND S, AND IN PLACES OF RELIGIOUS WORSHIP, THE MAIN EXTERIOR DOOR OR DOORS ARE PERMITTED TO BE EQUIPPED WITH KEY-OPERATED LOCKING DEVICES FROM THE EGRESS SIDE PROVIDED: A READILY VISIBLE DURABLE SIGN IS POSTED ON THE EGRESS SIDE ON OR ADJACENT TO THE DOOR STATING: "THIS DOOR TO REMAIN UNLOCKED WHEN BUILDING IS OCCUPIED". THE SIGN SHALL BE IN LETTERS 1 INCH HIGH ON A CONTRASTING BACKGROUND.

   NOTE: THE USE OF THE KEY-OPERATED LOCKING DEVICE IS REVOCABLE BY THE BUILDING OFFICIAL FOR DUE CAUSE.

7. DECORATIVE MATERIALS: IN EVERY GROUP A, E, I, R-1 AND R-2 OCCUPANCIES ALL DRAPES, HANGINGS, CURTAINS, DROPS AND ALL OTHER DECORATIVE MATERIAL INCLUDING CHRISTMAS TREES, THAT WOULD TEND TO INCREASE THE FIRE AND PANIC HAZARD SHALL BE MADE FROM A NON FLAMMABLE MATERIAL, OR SHALL BE TREATED AND MAINTAINED IN A FLAME-RETARDANT CONDITION BY MEANS OF A FLAME-RETARDANT SOLUTION OR PROCESS APPROVED BY THE "STATE FIRE MARSHAL". PER CALIFORNIA CODE OF REGULATIONS TITLE 19, ARTICLE 3, SUBSECTION 3.08 - DECORATIVE MATERIALS. PROVIDE A CALIFORNIA STATE FIRE MARSHAL CERTIFICATE OF FLAME RETARDANT OR A CALIFORNIA STATE FIRE MARSHAL APPROVED TESTING LAB CERTIFICATION FOR ANY DECORATIVE MATERIALS PRIOR TO FINAL INSPECTIONS. SAMPLES (4" X 12") ARE REQUIRED TO BE SUBMITTED TO VCFD FOR TESTING AND APPROVAL.

8. ADDITIONAL EXIT SIGNS AND EMERGENCY LIGHTING MAY BE REQUIRED PRIOR TO FINAL INSPECTION FOR OCCUPANCY. A PRELIMINARY WALK-THROUGH INSPECTION IS RECOMMENDED.

9. MAXIMUM OCCUPANT LOAD SIGN(S) SHALL BE POSTED IN ASSEMBLY AREA(S).

10. ALL ACCESS ROADS FOR THE DEVELOPMENT SHALL BE INSTALLED WITH FIRST LIFT OF ASPHALT PRIOR TO LUMBER DROP AND BUILDING CONSTRUCTION.

11. TALL FIRE HYDRANTS SHALL BE INSTALLED AND IN SERVICE PRIOR TO BUILDING CONSTRUCTION.

EGRESS NOTES

1. EXIT SIGNS SHALL BE INTERNALLY OR EXTERNALLY ILLUMINATED.

2. EXIT SIGNS ILLUMINATED BY AN EXTERNAL SOURCE SHALL HAVE AN INTENSITY OF NOT LESS THAN 5 FOOT CANDLES (54 LUX).

3. INTERNALLY ILLUMINATED SIGNS SHALL BE LISTED AND LABELED AND SHALL BE INSTALLED IN ACCORDANCE WITH THE MANUFACTURER'S INSTRUCTIONS AND SECTION 2702.

4. EXIT SIGNS SHALL BE ILLUMINATED AT ALL TIMES.

5. EXIT SIGNS SHALL BE CONNECTED TO AN EMERGENCY POWER SYSTEM THAT WILL PROVIDE AN ILLUMINATION OF NOT LESS THAN 90 MIN. IN CASE OF PRIMARY POWER LOSS (1011.2-1022.5.3)

6. EGRESS DOORS SHALL BE READILY OPENABLE FROM THE EGRESS SIDE WITHOUT THE USE OF A KEY OR SPECIAL KNOWLEDGE OR EFFORT. SEE 1008.1.8.3 FOR EXCEPTIONS.

7. DOOR HANDLES, LOCK AND OTHER OPERATING DEVICES SHALL BE INSTALLED AT A MIN. 34" AND A MAX. 48" ABOVE THE FINISHED FLOOR.

8. "THIS DOOR TO REMAIN UNLOCKED WHEN BUILDING IS OCCUPIED" SIGN REQUIRED.

9. ALL EGRESS DOOR OPERATION SHALL ALSO COMPLY WITH SECTION 1008.1.9 - 1008.1.9.7

10. THE MEANS OF EGRESS, INCLUDING THE EXIT DISCHARGE, SHALL BE ILLUMINATED AT ALL TIMES THE BUILDING SPACE SERVED BY THE MEANS OF EGRESS IS OCCUPIED.

11. THE MEANS OF EGRESS ILLUMINATION LEVEL SHALL NOT BE LESS THAN 1 FOOT-CANDLE AT THE WALKING SURFACE.

12. THE POWER SUPPLY FOR MEANS OF EGRESS ILLUMINATION SHALL NORMALLY BE PROVIDED BY THE PREMISES' ELECTRICAL SUPPLY. IN THE EVENT OF POWER SUPPLY FAILURE, AN EMERGENCY ELECTRICAL SYSTEM SHALL AUTOMATICALLY ILLUMINATE THE FOLLOWING AREAS:;
    A. AISLES AND UNDISCLOSED EGRESS STAIRWAYS IN ROOMS THAT REQUIRE TWO OR MORE MEANS OF EGRESS;
    B. CORRIDORS, EXIT ENCLOSURES AND EXIT PASSAGEWAYS IN BUILDING REQUIRED TO HAVE TOW OR MORE EXITS.;
    C. EXTERIOR EGRESS COMPONENTS AT OTHER THAN THE LEVEL OF EXIT DISCHARGE UNTIL EXIT DISCHARGE IS ACCOMPLISHED FOR BUILDINGS REQUIRED TO HAVE TWO OR MORE EXITS.
    D. INTERIOR EXIT DISCHARGE ELEMENTS, AS PERMITTED IN SECTION 1027.1, IN BUILDINGS REQUIRED TO HAVE TWO OR MORE EXITS.

13. EXTERIOR LANDINGS, AS REQUIRED BY SECTION 1008.1.5, FOR EXIT DISCHARGE DOORWAYS IN BUILDINGS REQUIRED TO HAVE TWO OR MORE EXITS.

14. THE EMERGENCY POWER SYSTEM SHALL PROVIDE POWER FOR A DURATION OF NOT LESS THAN 90 MINUTES AND SHALL CONSIST OF STORAGE BATTERIES, UNIT EQUIPMENT OR AN ON-SITE GENERATOR. THE INSTALLATION OF THE EMERGENCY POWER SYSTEM SHALL BE IN ACCORDANCE WITH SECTION 2702.

15. EMERGENCY LIGHTING FACILITIES SHALL BE ARRANGED TO PROVIDE INITIAL ILLUMINATION THAT IS AT LEAST AN AVERAGE OF 1 FOOT-CANDLE (11 LUX) AND A MINIMUM AT ANY POINT OF 0.1 FOOT_CANDLE (1 LUX) MEASURE ALONG THE PATH OF EGRESS AT FLOOR LEVEL. ILLUMINATION LEVELS SHALL BE PERMITTED TO DECLINE TO 0.6 FOOT-CAN (6 LUX) AVERAGE AND A MINIMUM AT ANY POINT OF 0.06 FOOT-CANDLE (0.6 LUX) AT THE END OF THE EMERGENCY LIGHTING TIME DURATION. A MAXIMUM-TO-MINIMUM ILLUMINATION UNIFORMITY RATION OF 40 TO 1 SHALL NOT BE EXCEEDED.

DOOR ACCESSIBILTY NOTES

1. GROUND AND FLOOR SURFACES ALONG ACCESSIBLE ROUTES AND IN ACCESSIBLE ROOMS AND SPACES INCLUDING FLOORS, WALKS, RAMPS, STAIRS AND CURB RAMPS SHALL BE STABLE, FIRM AND SLIP RESISTANT.

2. OPENINGS IN FLOOR OR GROUND SURFACES SHALL NOT ALLOW PASSAGE OF A SPHERE MORE THAN 1/2" DIAMETER EXCEPT AS ALLOWED IN SECTIONS 11B-407.4.3, 11B-409.4.3, 11B-410.4, 11B-810.5.3 AND DIAMETER EXCEPT AS ALLOWED IN SECTIONS 11B-407.4.3, 11B-409.4.3, 11B-410.4, 11B-810.5.3. ELONGATED OPENINGS SHALL BE PLACED SO THAT THE LONG DIMENSION IS PERPENDICULAR TO THE DOMINANT DIRECTION OF TRAVEL. (11B-302.3).

3. ALL NEW CONSTRUCTION MUST COMPLY WITH DIMENSIONS AS DENOTED ON THESE CONSTRUCTION DOCUMENTS AND WITH CHAPTER 11B OF THE 2016 CBC. DIMENSIONS WITHIN A SPECIFIED DIMENSIONAL "RANGE" MUST BE LESS-THAN THE MAXIMUM DIMENSIONAL RANGE OR GREATER THAN THE MINIMUM DIMENSIONAL RANGE. IN OTHER WORDS, NEW CONSTRUCTION SHALL NOT BE EQUAL TO EITHER THE MAXIMUM OR MINIMUM DIMENSIONS, BUT SHALL BE LESS THAN THE MAXIMUM AND GREATER THAN THE MAXIMUM OR MINIMUM DIMENSIONS, BUT SHALL BE LESS THAN THE MAXIMUM AND GREATER THAN THE DESIGN INTENT OF ARCHITECT IS TO PROVIDE REASONABLE DIMENSIONAL TOLERANCES, ENSURE COMPLIANCE WITH THE ADA, AND TO SIMPLIFY AND EXPEDITE THE CONSTRUCTION PROCESS. CONTRACTOR SHALL BE HELD FULLY RESPONSIBLE FOR NON-COMPLIANCE WITH THIS NOTICE. CONTRACTOR TO NOTIFY ARCHITECT IN WRITING PRIOR TO BIDDING OF ANY QUESTIONS OR CONCERNS RELATING TO THIS MATTER.

4. DOOR CLOSERS AND GATE CLOSERS SHALL BE ADJUSTED SO THAT FROM AN OPEN POSITION OF 90 DEGREES, THE TIME REQUIRED TO MOVE THE DOOR TO A POSITION 12 DEGREES FROM THE LATCH IS 5 SECONDS MINIMUM. (11B-404.2.8.1).

5. THE FORCE FOR PUSHING OR PULLING A DOOR OR GATE OTHER THAN FIRE DOORS SHALL BE AS FOLLOWS
   1. INTERIOR HINGED DOORS AND GATES: 5 POUNDS (22.2 N) MAXIMUM.
   2. SLIDING OR FOLDING DOORS: 5 POUNDS (22.2 N) MAXIMUM.
   3. REQUIRED FIRE DOORS: THE MINIMUM OPENING FORCE ALLOWABLE BY THE APPROPRIATE ADMINISTRATIVE AUTHORITY, NOT TO EXCEED 15 POUNDS (66.7 N).
   4. EXTERIOR HINGED DOORS: 5 POUNDS (22.2 N) MAXIMUM. THESE FORCES DO NOT APPLY TO THE FORCE REQUIRED TO RETRACT LATCH BOLTS OR DISENGAGE OTHER DEVICES THAT HOLD THE DOOR OR GATE IN A CLOSED POSITION. (11B-404.2.9).

6. POWER-OPERATED DOORS. WHERE MEANS OF EGRESS DOORS ARE OPERATED BY POWER, SUCH AS DOORS WITH A PHOTOELECTRIC-ACTUATED MECHANISM TO OPEN THE DOOR UPON THE APPROACH OF A PERSON, OR DOORS WITH POWER-ASSISTED MANUAL OPERATION, THE DESIGN SHALL BE SUCH THAT IN THE EVENT OF POWER FAILURE, THE DOOR IS CAPABLE OF BEING OPENED MANUALLY TO PERMIT MEANS OF EGRESS TRAVEL OR CLOSED WHERE NECESSARY TO SAFEGUARD MEANS OF EGRESS. THE FORCES REQUIRED TO OPEN THESE DOORS MANUALLY SHALL NOT EXCEED THOSE SPECIFIED IN SECTION 1010.1.3, EXCEPT THAT THE FORCE TO SET THE DOOR IN MOTION SHALL NOT EXCEED 50 POUNDS (220 N). THE DOOR SHALL BE CAPABLE OF SWINGING FROM ANY POSITION TO THE FULL WIDTH OF THE OPENING IN WHICH SUCH DOOR IS INSTALLED WHEN A FORCE IS APPLIED TO THE DOOR ON THE SIDE FROM WHICH EGRESS IS MADE. FULL-POWER-OPERATED DOORS SHALL COMPLY WITH BHMA A156.10. POWER-ASSISTED AND LOW-ENERGY DOORS SHALL COMPLY WITH BHMA A156.19. 7. TEST DOORS FOR DOOR OPENING FORCE AND CLOSING SPEED WITH AIR CONDITIONING AND OTHER FORMS OF MECHANICAL PRESSURIZATION TURNED ON AND ALSO WHEN TURNED OFF.

GENERAL CODE & NOTES

1. ALL WORK INCLUDING MATERIALS AND WORKMANSHIP, SHALL CONFORM TO THE REQUIREMENTS OF LOCAL CODES, LAWS, AND ORDINANCES AND THE 2016 EDITION OF THE CALIFORNIA BUILDING CODE. W/ LOCAL AMENDMENTS IN THE EVENT OF A CONFLICT WITH CODE REQUIREMENTS AND ITEMS CALLED OUT ON THE PLANS, THAT CODE OR CALL-OUT WHICH ESTABLISHES THE HIGHER STANDARD SHALL TAKE PRECEDENCE. THE ARCHITECT SHALL BE NOTIFIED OF ALL CONFLICTS.

2. THE CONTRACTOR SHALL VISIT THE JOB SITE PRIOR TO BIDDING AND SHALL VERIFY ALL DIMENSIONS AND CONDITIONS PRIOR TO BEGINNING WORK. SHOULD ANY CONDITION ARISE WHERE THE INTENT OF THE DRAWINGS IS IN DOUBT OR WHERE THERE IS A DISCREPANCY BETWEEN THE CONSTRUCTION DOCUMENTS AND THE FIELD CONDITIONS, THE ARCHITECT SHALL BE NOTIFIED IMMEDIATELY FOR CLARIFICATION.

3. DIMENSIONS TAKE PRECEDENCE: DIMENSIONS TYPICALLY TO COLUMN CENTER LINES, FACE OF CONCRETE OR MASONRY, FACE OF FINISH OR AS NOTED ON DRAWINGS. DO NOT SCALE DRAWINGS.

4. BARRICADES SHALL BE ERECTED PER LOCAL DEPARTMENT OF BUILDING AND SAFETY AND AS REQUIRED FOR SECURITY.

5. ALL REQUIRED EXIT DOORS SHALL BE OPENABLE FROM THE INSIDE WITHOUT A KEY OR ANY SPECIAL KNOWLEDGE.

6. IF THE FOLLOWING WORDS APPEAR IN ARCHITECTURAL DRAWINGS OR NOTES, REFER TO DOCUMENTS PREPARED BY THE CORRESPONDING CONSULTANTS OR ENGINEERING AND DESIGN DISCIPLINES: "CIVIL": REFER TO CIVIL DOCUMENTS, "STRUCTURAL": REFER TO STRUCTURAL DOCUMENTS, "PLUMBING": REFER TO PLUMBING DOCUMENTS, "MECHANICAL": REFER TO MECHANICAL DOCUMENTS, "ELECTRICAL": REFER TO ELECTRICAL DOCUMENTS, "INTERIORS": REFER TO INTERIORS DOCUMENTS, "LANDSCAPE": REFER TO LANDSCAPE DOCUMENTS. FOR CIVIL, STRUCTURAL, PLUMBING, MECHANICAL, ELECTRICAL, INTERIORS AND LANDSCAPE GENERAL NOTES: SEE CONSULTANTS DRAWINGS.

7. ALL GLASS WORK SHALL COMPLY WITH CBC (LATEST APPROVED EDITION) OR LOCAL GOVERNING CODE.

8. ALL EXPOSED NON-PREFINISHED METAL IS TO BE PAINTED, INCLUDING SHOP OR FACTORY PRIMED SURFACES.

9. FIELD COORDINATE ALL FIELD ROUTED PIPE, CONDUIT, DUCT RUNS, ETC..., WITH LOCATIONS OF RECESSED ACCESSORIES AND EQUIPMENT. NOTIFY ARCHITECT OF POTENTIAL CONFLICTS PRIOR TO PROCEEDING WITH WORK. PLUMBING, MECHANICAL AND ELECTRICAL DOCUMENTS ARE DIAGRAMMATIC BY NATURE. THEREFORE, IT IS THE RESPONSIBILITY OF THE GENERAL CONTRACTOR TO FIELD COORDINATE REQUIRED CLEARANCES WITH THE APPROPRIATE TRADES. ADDITIONAL CHARGES WILL NOT BE APPROVED WHICH STEM FROM LACK OF FIELD COORDINATION.

10. EXPOSED WELDS: GRIND SMOOTH AND FIELD DRESS ALL WELDS THAT REMAIN VISIBLE AND ARE NOT CONCEALED BY OTHER FINISHES.

11. EXIT SIGNS SHALL BE INSTALLED WHERE INDICATED AND AS REQUIRED. SIGN SHALL HAVE LETTERS A MINIMUM OF 6" HIGH ON CONTRASTING BACKGROUND. LIGHTING FOR SIGNS SHALL CONFORM TO AGENCY REQUIREMENTS.

12. ALL GLASS OVER 9 SQUARE FEET IN AREAS WITHIN 18" ABOVE FLOOR OR 36" OF GRADE, AND GLASS DOORS AND WALL PANELS SHALL BE LAMINATED OR FULLY TEMPERED.

13. ALL GLAZING WITHIN THE SAME WALL AS A DOOR AND WITHIN 24" OF THE DOOR AND WITHIN 18" OF THE FLOOR SHALL BE TEMPERED.

14. ALL DOOR HARDWARE SHALL BE LEVER TYPE OR PANIC HARDWARE.

15. A FINAL REPORT FOR THE TESTING AND ADJUSTING OF ALL NEW SYSTEMS SHALL BE COMPLETED PRIOR TO FINAL INSPECTION. THIS REPORT SHALL BE SIGNED BY THE INDIVIDUAL RESPONSIBLE FOR PERFORMING THESE SERVICES.

16. AN OPERATION AND SYSTEMS MANUAL SHALL BE PROVIDED TO THE FIELD INSPECTOR AT THE TIME OF FINAL INSPECTION.

17. THE VOC CONTENT VERIFICATION CHECKLIST, FORM GRN 2, SHALL BE COMPLETED AND VERIFIED PRIOR TO FINAL INSPECTION APPROVAL. THE MANUFACTURER'S SPECIFICATIONS SHOWING VOC CONTENT FOR ALL APPLICABLE PRODUCTS SHALL BE READILY AVAILABLE AT THE JOB SITE AND BE PROVIDED TO THE FIELD INSPECTOR FOR VERIFICATION.

18. ARCHITECTURAL PAINTS AND COATINGS, ADHESIVES, CAULKS AND SEALANTS SHALL COMPLY WITH THE VOLATILE ORGANIC COMPOUND (VOC) LIMITS LISTED IN LADBS GREEN FORM 11. TAKEN FROM 2017 LADSBS GREEN BUILDING CODE, TABLES 4.504.1, 4.504.2, 4.504.3, 4.504.5, 5.504.4.1, 5.504.4.2, 5.504.4.3, 5.04.4.5

19. ALL EXIT DOOR OPERATIONS SHALL COMPLY WITH 1010.1.9 TO 1010.1.9.7
    DOOR HANDLES, LOCK AND OTHER OPERATING DEVICES SHALL BE INSTALLED AT A MIN. 34" AND A MAX. 48" ABOVE FINISH FLOOR.

20. FOR CONCRETE SLAB PENETRATIONS AND CORES REFER TO STRUCTURAL DRAWINGS.

21. THE CONSTRUCTION SHALL NOT RESTRICT A FIVE-FOOT CLEAR AND UNOBSTRUCTED ACCESS TO ANY WATER OR POWER DISTRIBUTION FACILITIES (POWER POLES, PULL-BOXES, TRANSFORMERS, VAULTS, PUMPS, VALVES, METERS, APPURTENANCES, ETC.) OR TO THE LOCATION OF THE HOOK-UP.

22. THE CONSTRUCTION SHALL NOT BE WITHIN TEN FEET OF ANY POWER LINES-WHETHER OR NOT THE LINES ARE LOCATED ON THE PROPERTY. FAILURE TO COMPLY MAY CAUSE CONSTRUCTION DELAYS AND/ OR ADDITIONAL EXPENSES.

23. AN APPROVED SEISMIC GAS SHUTOFF VALVE WILL BE INSTALLED ON THE FUEL GAS LINE ON THE DOWN STREAM SIDE OF THE UTILITY METER AND BE RIGIDLY CONNECTED TO THE EXTERIOR OF THE BUILDING OR STRUCTURE CONTAINING THE FUEL GAS PIPING." (PER ORDINANCE 170,158) (INCLUDES COMMERCIAL ADDITIONS AND TI WORK OVER $10,000.) SEPARATE PLUMBING PERMIT IS REQUIRED.

24. PROVIDE LOW FLUSH WATER CLOSETS FOR ALL NEW CONSTRUCTION.

25. A COPY OF THE EVALUATION REPORT AND / OR CONDITIONS OF LISTING SHALL BE MADE AVAILABLE AT THE JOB SITE.

26. THE BUILDING MUST BE EQUIPPED WITH AN AUTOMATIC FIRE EXTINGUISHING SYSTEM, COMPLYING WITH (NFPA-13); THE SPRINKLER SYSTEM SHALL BE DESIGNED AND INSTALLED IN ACCORDANCE WITH CODE

27. EVERY SPACE INTENDED FOR HUMAN OCCUPANCY SHALL BE PROVIDED WITH NATURAL LIGHT BY MEANS OF EXTERIOR GLAZED OPENINGS IN ACCORDANCE WITH SECTION 1205.2 OR SHALL BE PROVIDED WITH ARTIFICIAL LIGHT THAT IS ADEQUATE TO PROVIDE AN AVERAGE ILLUMINATION OF 10 FOOT CANDLES OVER THE AREA OF THE ROOM AT A HEIGHT OF 30 INCHES ABOVE THE FLOOR LEVEL.

28. CONSTRUCTION WASTE SHALL BE REDUCED BY 65% . SEE SPEC. 01 74 19 CONSTRUCTION WASTE MANAGMENT.

29. CONTRACTOR SHALL PROVIDE DOCUMENTS TO SHOW HVAC SYSTEM INSTALLERS ARE TRAINED AND CERTIFIED IN THE PROPER INSTALLATION OF HVAC SYSTEMS (GREEN CODE 702.1).

30. SPECIAL INSPECTORS MUST BE QUALIFIED AND ABLE TO DEMONSTRATE COMPETENCE IN THE DISCIPLINE THEY ARE INSPECTING (GREEN CODE 702.2).

31. FIXTURE FLOW RATE FORM (WORKSHEET WS-4) SHALL BE AVAILABLE ON FIELD FOR VERIFICATION.

32. SELF CERTIFICATION FIELD INSTALLATION FORM SHALL BE SUBMITTED TO INSPECTORS BEFORE FINAL INSPECTION.

THESE DRAWINGS AND THE INFORMATION CONTAINED ON THEM ARE THE SOLE PROPERTY OF KINETIC DESIGN. ANY USE OF THESE DOCUMENTS OR THE INFORMATION CONTAINED HEREIN, CAN ONLY BE USED WITH WRITTEN PERMISSION FROM KINETIC DESIGN. KINETIC DESIGN ASSUMES NO LIABILITY FOR THESE DRAWINGS OR INFORMATION CONTAINED HEREIN.

KD
Kinetic Design
20381 Lake Forest Dr. Suite B16
Lake Forest, CA. 92630
Main. 951.710.6334 Web. kineticdesign.build
Email. info@kineticdesign.build

STATE OF MISSOURI
JOHN C SCHNEIDER
NUMBER A-2012010034
ARCHITECT
STAMP DATE: 09/22/2021

NOT FOR CONSTRUCTION

THIS DRAWING IS PROVIDED FOR INFORMATIONAL PURPOSES ONLY. APPROVAL FROM THE ARCHITECT AND GOVERNING JURISDICTIONS MUST BE ATTAINED PRIOR TO THE ISSUANCE OF CONSTRUCTION DOCUMENTS. THE ARCHITECT AND HIS CONSULTANTS ASSUME NO RESPONSIBILITY FOR CONSTRUCTION BIDS OR CONSTRUCTION PERFORMED FROM THESE DRAWINGS.

REVISIONS

No.	DATE	DESCRIPTION
1	09-22-21	PCC #1, CLIENT AND LANDLORD REVISIONS

CLIENT INFORMATION

néktər
JUICE BAR.

PROJECT NAME
NEKTER - LEE'S SUMMIT, MO
940 NW PRYOR ROAD, UNIT: G,
LEE'S SUMMIT, MISSOURI 64081

SHEET NAME
GENERAL & ACCESSIBILITY NOTES

DRAWN	CHECKED
DATE	09/22/21
SCALE	12" = 1'-0"
PROJECT NUMBER	

SHEET
G002

RESERVED

ACCESSIBILITY NOTES (CONTINUED)

3. THE CONTRACTOR SHALL REVIEW, SIGN, DATE AND SUBMIT A MINIMUM OF (3) SETS OF COMPLETE AND DETAILED SHOP DRAWINGS, FINISHES, FIXTURE AND EQUIPMENT CUT SHEETS TO ARCHITECT FOR REVIEW. THE ARCHITECT SHALL HAVE (10) WORKING DAYS TURNAROUND TIME FROM RECEIPT OF SUBMITTAL. ALL SHOP DRAWINGS AND CUT SHEETS SIGNED "REVIEWED" SHALL SUPERSEDE ORIGINAL DRAWINGS IN DESIGN APPEARANCE ONLY. CONTRACTORS SHALL ASSUME RESPONSIBILITY FOR ERRORS IN THEIR DRAWINGS.

4. IN THE EVENT THAT THE AFOREMENTIONED DRAWINGS, SPECIFICATIONS, ETC. ARE NOT SUBMITTED FOR REVIEW AND APPROVAL, THE CONTRACTOR SHALL ASSUME FULL RESPONSIBILITY FOR THE REPLACEMENT, CORRECTION OR ACQUISITION OF PRODUCTS TO COMPLY WITH OWNER'S SPECIFICATION AND APPROVAL.

5. THE CONTRACTOR SHALL PROVIDE CHALK LINES ON THE SLAB OF PARTITIONS FOR APPROVAL PRIOR TO FRAMING AND SHALL NOTIFY ARCHITECT OF ANY DEVIATION FROM CONSTRUCTION DIMENSIONS OR CLEARANCES AS DESIGNATED ON THE DRAWINGS OR OF APPARENT CONSTRUCTION CONFLICTS.

6. UPON SUBSTANTIAL COMPLETION OF WORK, THE HVAC SYSTEM SHALL BE BALANCED BY A QUALIFIED ENGINEER AND A WRITTEN REPORT SHALL BE SUBMITTED TO THE OWNER.

7. UPON SUBMISSION OF THE "FINAL APPLICATION FOR PAYMENT", THE CONTRACTOR SHALL PROVIDE THE OWNER WITH (1) SET OF AS-BUILT DOCUMENTATION INCLUDING DRAWINGS, SPECIFICATIONS, ADDENDA, CHANGE ORDERS, PRODUCT DATA, EQUIPMENT WARRANTIES AND MANUALS, FINISH SAMPLES AND OTHER REQUIRED SUBMITTALS. THE CONTRACTOR SHALL PROVIDE THE OWNER WITH A WRITTEN WARRANTY COVERING ALL WORK PERFORMED UNDER THE CONTRACT. WARRANTY SHALL BE FOR A PERIOD OF ONE YEAR COMMENCING ON THE DATE OF SUBSTANTIAL COMPLETION AND SHALL BE INCLUDED WITH THIS SUBMITTAL.8. THE CONTRACTOR SHALL SUPPLY LIEN WAIVERS RELATING TO ALL WORK WITH THE "FINAL APPLICATION FOR PAYMENT" TO BE REVIEWED FOR "FINAL CERTIFICATE OF PAYMENT".

G. CHANGES IN WORK

1. THE OWNER WITHOUT INVALIDATING THE CONTRACT, MAY ORDER EXTRA WORK OR MAKE CHANGES BY ALTERING, ADDING TO OR DEDUCTING FROM THE WORK - THE CONTRACT SUM BEING ADJUSTED ACCORDINGLY. SUCH WORK SHALL BE EXECUTED UNDER THE CONDITIONS OF THE ORIGINAL CONTRACT EXCEPT THAT ANY CLAIM FOR EXTENSIONS OF TIME CAUSED THEREBY SHALL BE INDICATED ON THE CHANGE ORDER.

2. CLAIMS FOR ADDITIONAL WORK WILL BE SUBMITTED IN WRITING FOR REVIEW BY OWNER AND SHOULD INCLUDE A COMPLETE DESCRIPTION OF THE WORK, MATERIALS BEING USED, THE ROOM NUMBER OR AREA AFFECTED, AND THE AUTHORIZATION UNDER WHICH THE WORK IS BEING PERFORMED.
   A. SITE CONSIDERATIONS

3. DEMOLITION WORK SHALL BE COORDINATED WITH THE LANDLORD TO MINIMIZE DISRUPTION AND INCONVENIENCE TO OTHER OWNERS IN OCCUPIED BUILDINGS. MAINTAIN SAFE MEANS OF ACCESS AND EGRESS TO OCCUPIED OWNER SPACES.

4. PROVIDE CONCRETE FLOOR SLAB THROUGHOUT "LEAVE-OUT" AREA IN BACK OF HOUSE - MATCH EXISTING FLOOR CONSTRUCTION; COORDINATE WITH LANDLORD.

5. MAINTAIN THE INTEGRITY OF RATED PARTITIONS AND OTHER FIRE RATED ASSEMBLIES. REPAIR OR REPLACE DAMAGED PORTIONS WITH NEW CONSTRUCTION TO MATCH EXISTING AND HAVE REPAIR WORK APPROVED BY THE BUILDING INSPECTOR.

6. THE GENERAL CONTRACTOR SHALL REVIEW THE OWNER'S SPACE WITH THE LANDLORD TO DETERMINE IF ANY ACCESS PANELS ARE LOCATED IN THE OWNER'S SPACE FOR THE LANDLORD'S AND/OR OTHER OWNER ELECTRICAL BOXES AND/OR VALVES. THE GENERAL CONTRACTOR SHALL PROMPTLY NOTIFY THE ARCHITECT AND THE OWNER OF ANY REQUIRED ACCESS PANEL LOCATIONS.

8. BUILDING MECHANICAL AND ELECTRICAL SERVICE SHUT DOWN REQUIRED FOR THIS WORK SHALL BE SUBMITTED IN WRITING BY THE CONTRACTOR A MINIMUM OF (72) HOURS IN ADVANCE OF THE SHUT DOWN. THE CONTRACTOR SHALL OBTAIN APPROVAL FROM AUTHORITIES HAVING JURISDICTION PRIOR TO SHUT DOWN AND SHALL NOT OVERLY INCONVENIENCE BUILDING OCCUPANTS.

9. VERIFY EXISTING SPRINKLER DROP LOCATIONS (IF ANY). ADDITIONS, MODIFICATIONS OR RELOCATIONS OF THE EXISTING SPRINKLER SYSTEM ARE TO BE ALTERED IN TOTAL CONFORMANCE WITH LANDLORD'S CRITERIA AND SHALL BE SUBMITTED FOR PERMIT SEPARATELY. DRAWINGS SHALL BE SUBMITTED TO LANDLORD FOR REVIEW AND SUBMITTED SEPARATELY TO THE FIRE MARSHAL FOR PERMIT.
.

10. SPRINKLER HEADS AT STOREFRONT AND DISPLAY WINDOWS MUST BE FLUSH TYPE WITH COVER PLATES PAINTED TO MATCH THE ADJACENT CEILING COLOR. DINING AND KITCHEN MUST HAVE SEMI-RECESSED HEADS WITH ESCUTCHEON RINGS PAINTED TO MATCH THE ADJACENT CEILING COLOR.

11. WOOD CASEWORK SHALL CONFORM TO ARCHITECTURAL WOODWORK INSTITUTE (AWI) "PREMIUM GRADE" QUALITY STANDARDS AND SHALL BE "FLUSH OVERLAY" CONSTRUCTION UNLESS DETAILED OTHERWISE ON THE DRAWINGS.

12. PLASTIC LAMINATE CASEWORK SHALL CONFORM TO ARCHITECTURAL WOODWORK INSTITUTE (AWI) "CUSTOM GRADE" QUALITY STANDARDS AND SHALL BE "FLUSH OVERLAY" CONSTRUCTION UNLESS DETAILED OTHERWISE ON THE DRAWINGS.

13. CASEWORK SHALL BE SCRIBED TO WALL OR CEILING. CONTRACTOR SHALL COORDINATE WITH OTHER INVOLVED TRADES.

C. DEMOLITION, CUTTING, AND PATCHING

1. THE CONTRACTOR SHALL INSPECT THE SITE AND CALL ATTENTION TO ENVIRONMENTAL HAZARDS WITH LANDLORD. SAID HAZARDS ARE TO BE REMOVED AT THE LANDLORD'S EXPENSE. REMOVAL SHALL ADHERE TO THE ENVIRONMENTAL PROTECTION AGENCY'S GUIDELINES.

2. THE CONTRACTOR IS RESPONSIBLE FOR ALL DEMOLITION, CUTTING AND PATCHING REQUIRED TO FACILITATE COMPLETION OF THE WORK.

3. PRIOR TO STARTING WORK, ERECT TEMPORARY BARRIERS AROUND THE PERIMETER OF THE PROJECT AND BASE BUILDING TOILET FACILITIES TO PREVENT THE SPREAD OF DUST AND OTHER CONTAMINANTS TO ADJACENT AREAS OF THE BUILDING. MAINTAIN DUST PROOF AND SOUND BARRIERS THROUGHOUT THE COURSE OF CONSTRUCTION OR UNTIL NO LONGER REQUIRED. REMOVE BARRIERS AND REPAIR ANY DAMAGE CAUSED BY THEIR INSTALLATION TO MATCH ADJACENT SURFACES.

4. UNLESS NOTED OTHERWISE, ALL DEMOLISHED DEBRIS, MATERIAL, EQUIPMENT AND FIXTURES BECOME THE PROPERTY OF THE CONTRACTOR WHO IS RESPONSIBLE FOR ITS SAFE REMOVAL FROM THE SITE. DISPOSAL OF DEMOLISHED MATERIAL SHALL BE IN ACCORDANCE WITH APPLICABLE RULES, REGULATIONS AND ORDINANCES OF AUTHORITIES HAVING JURISDICTION. COORDINATE WITH LANDLORD.

5. PATCH ALL EXISTING OR NEWLY DAMAGED AREAS TO MATCH ADJACENT SURFACES IN QUALITY, TEXTURE AND COLOR. CONTRACTOR IS RESPONSIBLE FOR COORDINATION OF ALL TRENCHING AND UNDER GROUND WORK WITH SUBCONTRACTORS.

D. GENERAL CONSTRUCTION

1. CONTRACTOR SHALL VERIFY ALL GRID LINE COORDINATES AND CHECK THEM AGAINST DIMENSIONS SHOWN ON PLANS AND DETAILS. ARCHITECT SHALL BE NOTIFIED OF ANY DISCREPANCY DURING STAKING.

2. ALL LANDSCAPE MATERIALS DISPLACED OR DISTURBED AS A RESULT OF CONSTRUCTION SHALL BE REPLACED OR REPAIRED TO ORIGINAL CONDITION.

3. THE CONTRACTOR SHALL FIRMLY ANCHOR PARTITIONS PER JURISDICTION AND INDUSTRY STANDARDS AND USE METAL TRIM ACCESSORIES AT EXPOSED CORNERS, EDGES AND ENDS IN PLASTER AND DRYWALL PARTITIONS.

4. PROVIDE FIRE RETARDANT TREATED WOOD BLOCKING FOR ALL WALL MOUNTED PLUMBING FIXTURES, TOILET ACCESSORIES, CABINETS, AND TABLES.

5. ALL CONCEALED PLYWOOD, WOOD BLOCKING, AND WOOD STUD/JOIST FRAMING SHALL MEET U.L. FIRE RETARDANT TREATED REQUIREMENTS.

6. ALL MATERIALS USED IN UNFINISHED ATTIC SPACE SHALL BE NON-COMBUSTIBLE. ANY WOOD SHALL BE FIRE RETARDANT TREATED.

7. DO NOT PUNCH OR USE METAL DECK TO SUPPORT SUSPENDED CEILING. SUSPENDED METAL FRAMING-CEILING AND METAL STUD PARTITION FRAMING SHALL BE SUPPORTED FROM STRUCTURAL STEEL ROOF FRAME.

8. ALL ROOF PENETRATIONS SHALL BE CUT, FLASHED AND SEALED BY THE LANDLORD'S ROOFING CONTRACTOR IN ORDER TO MAINTAIN THE ROOF SYSTEM INTEGRITY AND WARRANTY.

9. THE CONTRACTOR SHALL PROVIDE ACCESS PANELS REQUIRED FOR MECHANICAL, ELECTRICAL AND PLUMBING INSTALLATIONS PER LOCAL BUILDING CODES. LOCATIONS SHALL BE COORDINATED WITH ARCHITECT PRIOR TO INSTALLATION.

10. CEILING FRAMING IN THE FIELD SHALL BE SQUARE, LEVEL AND PERFECTLY ALIGNED WITH EACH OTHER AND WITH THE RECESSED LIGHT FIXTURES. ALL RECESSED FIXTURES SHALL BE SET FLUSH INTO CEILING.

11. NEW PIPE, CONDUIT AND DUCT PENETRATIONS OF FIRE RATED ASSEMBLIES ARE TO BE CONSTRUCTED IN ACCORDANCE WITH AN UNDERWRITERS LABORATORY TESTED DESIGN.

12. WIRING AND CONDUIT IS TO BE CONCEALED IN BOTH NEW AND EXISTING PARTITIONS WITH ALL OUTLETS, SWITCHES AND SIMILAR DEVICES MOUNTED IN RECESSED JUNCTION BOXES WITH FLUSH COVER PLATES. SURFACE MOUNTED CONDUIT, WIREMOLD, OUTLETS, ETC. WILL NOT BE PERMITTED UNLESS OTHERWISE NOTED.

13. VERIFY EXACT DIMENSIONS OF ALL OWNER SUPPLIED EQUIPMENT, FEATURES AND FIXTURES TO ASSURE A PROPER FIT WHERE EQUIPMENT, FEATURES AND FIXTURES ARE SHOWN BUILT-IN TO NEW MILLWORK, UNDER COUNTER AND BETWEEN NEW AND EXISTING PARTITIONS.

14. COMMUNICATION, DATA, SECURITY AND SIMILAR SYSTEMS WILL BE PROVIDED AND INSTALLED BY THE OWNER UNLESS OTHERWISE NOTED IN THE CONTRACT DOCUMENTS. IT SHALL BE THE RESPONSIBILITY OF THE CONTRACTOR TO COORDINATE WITH THE OWNER' AND PROVIDE CONDUIT, BOXES AND OTHER ROUGH-IN REQUIREMENTS TO FACILITATE FINAL WIRING INSTALLATION.

15. LOCKSETS SHALL BE "KEYED" IN ACCORDANCE WITH OWNER REQUIREMENTS. "KEYS" ARE TO BE DELIVERED TO OWNER PROPERLY TESTED. THE NUMBER OF MASTER AND PASS KEYS SHALL BE COORDINATED WITH LANDLORD.

16. PROVIDE STANDARD IDENTIFICATION PLATE WITH OWNER NAME AND SPACE DESIGNATION/ADDRESS AS SPECIFIED THROUGH A COMMON MANUFACTURER BY THE LANDLORD. IF NO LANDLORD STANDARD PROVIDED, PROVIDE A STANDARD 3" X 9" LAMINATED PLASTIC, DARK COOL GRAY COLORED FACE WITH WHITE LETTERING ROUTED INTO FACE. FASTENED TO OWNER REAR EXIT SERVICE DOOR ON THE ACCESS CORRIDOR FACE.

17. PROVIDE WATER RESISTANT GYPSUM BOARD AT ALL TILE LOCATIONS, PLASTIC PANEL LOCATIONS, MECHANICAL ROOM WALLS, AND AS NOTED ON DRAWINGS.

18. THE CONTRACTOR SHALL BE RESPONSIBLE FOR COMPLYING WITH LOCAL V.O.C. REGULATIONS FOR MATERIALS USED IN CONSTRUCTION.

19. SPACES BEING SURFACED SHALL BE CLOSED TO TRAFFIC AND OTHER WORK DURING THE LAYING OF FLOORING, STONE, WOOD, OR OTHER MATERIAL. FINISHED FLOORS SHALL BE COVERED AFTER INSTALLATION FOR PROTECTION.

E. FIRE / LIFE SAFETY

1. ALL REQUIRED PERMITS AND APPROVALS MUST BE OBTAINED FROM THE FIRE DEPARTMENT BEFORE BUILDINGS ARE OCCUPIED.2. MAINTAIN THE FUNCTION AND INTEGRITY OF EXISTING FIRE, LIFE/SAFETY AND SECURITY SYSTEMS.

2. PROVIDE OCCUPANCY SIGNS CONFORMING TO APPLICABLE BUILDING CODE REQUIREMENTS.

3. PROVIDE ADDITIONAL EXIT SIGNS AND FIRE EXTINGUISHERS IN TYPE, NUMBER AND LOCATION AS DIRECTED BY THE FIRE DEPARTMENT FIELD INSPECTOR.

4. DURING CONSTRUCTION THE GENERAL CONTRACTOR SHALL PROVIDE A PORTABLE FIRE EXTINGUISHER WITH A RATING OF NOT LESS THAN 2-A WITHIN (75 FT.) FOOT TRAVEL DISTANCE TO ALL PORTIONS OF THE BUILDING ON EACH FLOOR.

F. REQUIRED APPROVALS AND SUBMITTALS

1. WHERE THE TERMS "OR EQUAL", "SIMILAR", OR OTHER GENERAL QUALIFYING TERMS ARE USED, IT SHALL BE UNDERSTOOD THAT REFERENCE IS MADE TO THE RULING AND JUDGMENT OF THE ARCHITECT AND MUST BE SUBMITTED FOR APPROVAL PRIOR TO PURCHASE OR USE.

2. THE CONTRACTOR SHALL HAVE (10) WORKING DAYS FROM AWARD OF THE CONTRACT TO SUBMIT SUBSTITUTIONS OF SPECIFIED PRODUCTS OR WORK FOR REVIEW BY ARCHITECT AND SHALL INCLUDE CUT SHEETS WITH SPECIFICATIONS AND REASONS FOR SUBSTITUTION. THE ARCHITECT SHALL RESPOND IN (10) WORKING DAYS FROM RECEIPT OF SUBMITTAL. NO SUBSTITUTIONS SHALL BE ACCEPTED AFTER THE INITIAL TIME LIMIT HAS EXPIRED.

THESE DRAWINGS AND THE INFORMATION CONTAINED ON THEM ARE THE SOLE PROPERTY OF KINETIC DESIGN. ANY USE OF THESE DOCUMENTS OR THE INFORMATION CONTAINED HEREIN, CAN ONLY BE USED WITH WRITTEN PERMISSION FROM KINETIC DESIGN. KINETIC DESIGN ASSUMES NO LIABILITY FOR THESE DRAWINGS OR INFORMATION CONTAINED HEREIN.

KD
Kinetic Design
20381 Lake Forest Dr. Suite B16
Lake Forest, CA. 92630
Main. 951.710.6334 Web. kineticdesign.build
Email. info@kineticdesign.build

STATE OF MISSOURI
JOHN C SCHNEIDER
NUMBER A-2012010034
ARCHITECT

STAMP DATE: 09/22/2021

NOT FOR CONSTRUCTION

THIS DRAWING IS PROVIDED FOR INFORMATIONAL PURPOSES ONLY. APPROVAL FROM THE ARCHITECT AND GOVERNING JURISDICTIONS MUST BE ATTAINED PRIOR TO THE ISSUANCE OF CONSTRUCTION DOCUMENTS. THE ARCHITECT AND HIS CONSULTANTS ASSUME NO RESPONSIBILITY FOR CONSTRUCTION BIDS OR CONSTRUCTION PERFORMED FROM THESE DRAWINGS.

REVISIONS

No.	DATE	DESCRIPTION
1	09-22-21	PCC #1, CLIENT AND LANDLORD REVISIONS

CLIENT INFORMATION

nektar JUICE BAR

PROJECT NAME
NEKTER - LEE'S SUMMIT, MO
940 NW PRYOR ROAD, UNIT: G,
LEE'S SUMMIT, MISSOURI 64081

SHEET NAME
GENERAL & ACCESSIBILITY NOTES

DRAWN
CHECKED
DATE 09/22/21
SCALE 12" = 1'-0"
PROJECT NUMBER
SHEET
G003

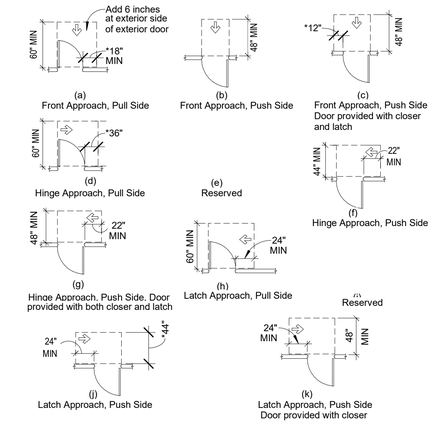

MANEUVERING CLEARANCES AT MANUAL SWINGING DOORS AND GATES

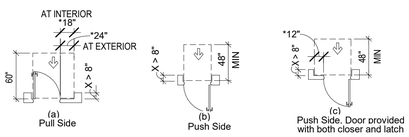

MANEUVERING CLEARANCES AT RECESSED DOORS AND GATES

MANEUVERING CLEARANCES AT MANUAL SWINGING DOORS AND GATES			
TYPE OF USE		MINIMUM MANEUVERING CLEARANCE	
APPROACH DIRECTION	DOOR SIDE	PERPENDICULAR TO DOORWAY	PARALLEL TO DOORWAY (beyond latch side unless noted)
FROM FRONT	PULL	60-1/8 INCHES	18-1/8 INCHES[5]
FROM FRONT	PUSH	48-1/8 INCHES	0 INCHES[1]
FROM HINGE SIDE	PULL	60-1/8 INCHES	36-1/8 INCHES
FROM HINGE SIDE	PUSH	44-1/8 INCHES[2]	22-1/8 INCHES[3]
FROM LATCH SIDE	PULL	60-1/8 INCHES	24-1/8 INCHES
FROM LATCH SIDE	PUSH	44-1/8 INCHES[4]	24-1/8 INCHES

1. ADD 12 INCHES IF CLOSER AND LATCH ARE PROVIDED.
2. ADD 4 INCHES IF CLOSER AND LATCH ARE PROVIDED.
3. BEYOND HINGE SIDE.
4. ADD 4 INCHES IF CLOSER IS PROVIDED.
5. ADD 6 INCHES AT EXTERIOR SIDE OF EXTERIOR DOORS.

NOTES:

1. HANDLES, PULLS, LATCHES, LOCKS, AND OTHER OPERABLE PARTS ON DOORS ANDGATES SHALL COMPLY WITH SECTION 11B-309.4. OPERABLE PARTS OF SUCH HARDWARE SHALL BE (CENTERED BETWEEN) 34 INCHES MINIMUM AND 44 INCHES MAXIMUM ABOVE THE FINISH FLOOR OR GROUND. (A117.1 SECTION 404.2.6).
2. DOOR OPENINGS SHALL PROVIDE A CLEAR WIDTH OF 32 INCHES MINIMUM.

ACCESSIBLE DOOR CLEARANCES

Scale. 1/8" = 1'-0" — 13

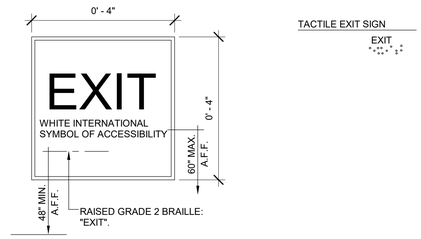

RAISED CHARACTERS.
RAISED CHARACTERS SHALL BE DUPLICATED IN BRAILLE.

DEPTH
RAISED CHARACTERS SHALL BE 1/32 INCH (0.8 mm) MINIMUM ABOVE THEIR BACKGROUND.

CASE
CHARACTERS SHALL BE UPPERCASE.

STYLE
CHARACTERS SHALL BE UPPERCASE. CHARACTERS SHALL BE SANS SERIF. CHARACTERS SHALL NOT BE ITALIC, OBLIQUE, SCRIPT, HIGHLY DECORATIVE, OR OF OTHER UNUSUAL FORMS.

CHARACTER HEIGHT
CHARACTER HEIGHT MEASURED VERTICALLY FROM THE BASELINE OF THE CHARACTER SHALL BE 5/8 INCH MINIMUM AND 2 INCHES MAXIMUM BASED ON THE HEIGHT OF THE UPPERCASE LETTER "I".

BRAILLE.
BRAILLE SHALL BE CONTRACTED (GRADE 2) AND SHALL COMPLY WITH ICC A117.1 SECTION 703.4.

DIMENSIONS AND CAPITALIZATION
BRAILLE DOTS SHALL HAVE A DOMED OR ROUNDED SHAPE

HEIGHT ABOVE FINISH FLOOR OR GROUND.
TACTILE CHARACTERS ON SIGNS SHALL BE LOCATED 48 INCHES MINIMUM ABOVE THE FINISH FLOOR OR GROUND SURFACE, MEASURED FROM THE BASELINE OF THE LOWEST BRAILLE CELLS AND 60 INCHES MAXIMUM ABOVE THE FINISH FLOOR OR GROUND SURFACE, MEASURED FROM THE BASELINE OF THE HIGHEST LINE OF RAISED CHARACTERS.

LOCATION
WHERE A TACTILE SIGN IS PROVIDED AT A DOOR, THE SIGN SHALL BE LOCATED ALONGSIDE THE DOOR AT THE LATCH SIDE. WHERE A TACTILE SIGN IS PROVIDED AT DOUBLE DOORS WITH ONE ACTIVE LEAF, THE SIGN SHALL BE LOCATED ON THE INACTIVE LEAF. WHERE A TACTILE SIGN IS PROVIDE AT DOUBLE DOORS WITH TWO ACTIVE LEAFS, THE SIGN SHALL BE LOCATED TO THE RIGHT OF THE RIGHT HAND DOOR. WHERE THERE IS NO WALL SPACE AT THE LATCH SIDE OF A SINGLE DOOR OR AT THE RIGHT SIDE OF DOUBLE DOORS, SIGNS SHALL BE LOCATED ON THE NEAREST ADJACENT WALL. SIGNS CONTAINING TACTILE CHARACTERS SHALL BE LOCATED SO THAT A CLEAR FLOOR SPACE OF 18 INCHES MINIMUM BY 18 INCHES MINIMUM, CENTERED ON THE TACTILE CHARACTERS, IS PROVIDED BEYOND THE ARC OF ANY DOOR SWING BETWEEN THE CLOSED POSITION AND 45 DEGREE OPEN POSITION. WHERE PERMANENT IDENTIFICATION SIGNAGE IS PROVIDED FORROOMS AND SPACES THEY SHALL BE LOCATED ON THE APPROACH SIDE OF THE DOOR AS ONE ENTERS THEROOM OR SPACE. SIGNS THAT IDENTIFY EXITS SHALL BE LOCATED ON THE APPROACH SIDE OF THE DOOR AS ONE EXITS THE ROOM OR SPACE.

VISUAL CHARACTERS SHALL COMPLY WITH SECTION ICC A117.1 SECTION 703.2.

FINISH AND CONTRAST CHARACTERS AND THEIR BACKGROUND SHALL HAVE A NON-GLARE FINISH. CHARACTERS SHALL CONTRAST WITH THEIR BACKGROUND WITH EITHER LIGHT CHARACTERS ON A DARK BACKGROUND OR DARK CHARACTERS ON A LIGHT BACKGROUND.

PICTOGRAM FIELD
PICTOGRAMS SHALL HAVE A FIELD HEIGHT OF 6 INCHES MINIMUM. CHARACTERS AND BRAILLE SHALL NOT BE LOCATED IN THE PICTOGRAM FIELD.

NOTES:

1. TACTILE EGRESS SIGNAGE (SECURE TO STOREFRONT GLASS W/ ADHESIVE). PROVIDE PLASTIC BACKING OVER OTHER SIDE OF GLASS FOR COVERAGE. ADHESIVE SHALL BE COMPATIBLE w/ GLASS APPLICATION.

BUILDING EXIT SIGN

Scale. 6" = 1'-0" — 10

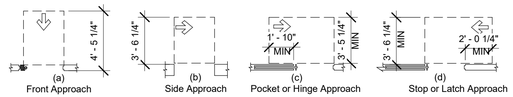

MANEUVERING CLEARANCES AT DOORWAYS WITHOUT DOORS, SLIDING DOORS, GATES, AND FOLDING DOORS

	MINIMUM MANEUVERING CLEARANCE	
APPROACH DIRECTION	PERPENDICULAR TO DOORWAY	PARALLEL TO DOORWAY (beyond stop/latch side unless noted)
FROM FRONT	48-1/8 INCHES	0 INCHES
FROM SIDE [1]	42-1/8 INCHES	0 INCHES
FROM POCKET/HINGE SIDE	42-1/8 INCHES	22-1/8 INCHES[2]
FROM STOP/LATCH SIDE	42-1/8 INCHES	24-1/8 INCHES

NOTES:

MANEUVERING CLEARANCES AT DOORWAYS WITHOUT DOORS OR GATES, MANUAL SLIDING DOORS, AND MANUAL FOLDING DOORS
1. DOORWAY WITH NO DOOR ONLY.
2. BEYOND POCKET/HINGE SIDE.

ACCESSIBLE DOOR CLEARANCES.

Scale. 3/16" = 1'-0" — 8

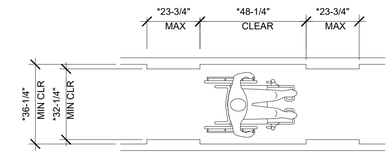

ICC A117.1 FIGURE 403.5
CLEAR WIDTH OF AN ACCESSIBLE ROUTE

NOTE:

1. THE CLEAR WIDTH SHALL BE PERMITTED TO BE REDUCED TO 32-1/4" MINIMUM FOR A LENGTH OF 23-3/4" MAXIMUM PROVIDED THAT REDUCED WIDTH SEGMENTS ARE SEPARATED BY SEGMENTS THAT ARE 48-1/4" LONG MINIMUM AND 36-1/4" WIDE MINIMUM.

CLEAR WIDTH AT ROUTE/ TURN

Scale. 3/8" = 1'-0" — 4

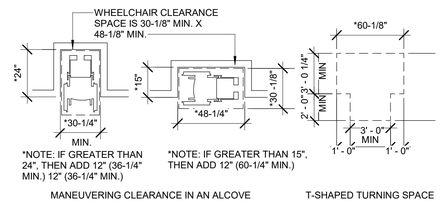

MANEUVERING CLEARANCE IN AN ALCOVE — T-SHAPED TURNING SPACE

NOTES:

1. ALCOVES SHALL BE 36-1/4" WIDE MINIMUM WHERE THE DEPTH EXCEEDS 24 INCHES.
2. ALCOVES SHALL BE 60-1/4" WIDE MINIMUM WHERE THE DEPTH EXCEEDS 15 INCHES.
3. THE TURNING SPACE SHALL BE A T-SHAPED SPACE WITHIN A 60-1/8" SQUARE MINIMUM WITH ARMS AND BASE 36-1/8" WIDE MINIMUM. EACH ARM OF THE T SHALL BE CLEAR OF OBSTRUCTIONS 12" MINIMUM IN EACH DIRECTION AND THE BASE BE CLEAR OF OBSTRUCTIONS 12" MINIMUM IN EACH DIRECTION AND THE BASE SHALL BE CLEAR OF OBSTRUCTIONS 24" MINIMUM. THE SPACE SHALL BE PERMITTED TO INCLUDE KNEE AND TOE CLEARANCE ONLY AT THE END OF EITHER THE BASE OR ONE ARM.

CLEAR FLOOR & TURNING SPACE

Scale. 3/16" = 1'-0" — 7

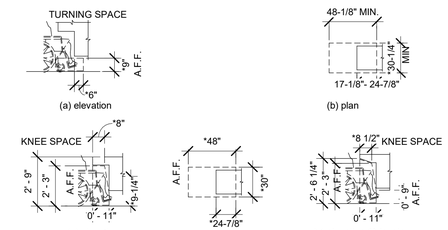

NOTES:

1. SPACE UNDER AN ELEMENT BETWEEN THE FINISH FLOOR OR GROUND AND 9-1/4 INCHES ABOVE THE FINISH FLOOR OR GROUND SHALL BE CONSIDERED TOE CLEARANCE
2. SPACE UNDER AN ELEMENT BETWEEN 9-1/4 INCHES AND 27 INCHES ABOVE THE FINISH FLOOR OR GROUND SHALL BE CONSIDERED KNEE CLEARANCE

KNEE CLEARANCE

Scale. 1/4" = 1'-0" — 3

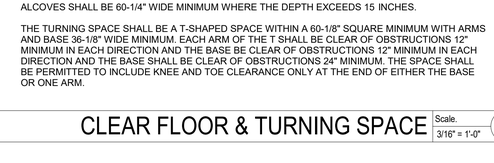

NOTES:

1. WHERE A FORWARD REACH IS UNOBSTRUCTED, THE HIGH FORWARD REACH SHALLBE 47 7/8" MAXIMUM AND THE LOW FORWARD REACH SHALL BE 15 1/8" MINIMUM ABOVE THE FINISH FLOOR OR GROUND.
2. WHERE A HIGH FORWARD REACH IS OVER AN OBSTRUCTION, THE CLEAR FLOOR SPACE SHALL EXTEND BENEATH THE ELEMENT FOR A DISTANCE NOT LESS THAN THE REQUIRED REACH DEPTH OVER THE OBSTRUCTION. THE HIGH FORWARD REACH SHALL BE 47 7/8" MAXIMUM WHERE THE REACH DEPTH IS 20" MAXIMUM. 43 7/8" MAXIMUM AND THE REACH DEPTH SHALL BE 24 7/8" MAXIMUM.

FORWARD REACH

Scale. 3/16" = 1'-0" — 6

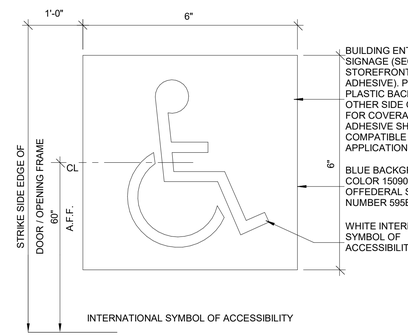

BUILDING SIGN ENTRY

Scale. 6" = 1'-0" — 2

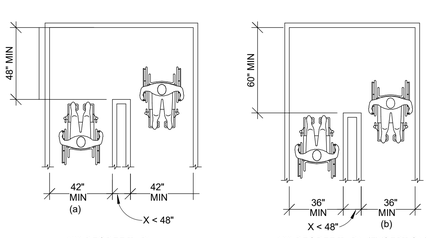

ICC A117.1 FIG. 403.5.1 CLEAR WIDTH AT TURN

NOTES:

1. THE MINIMUM WIDTH OF EXIT PASSAGEWAYS SHALL BE DETERMINED AS SPECIFIED IN SECTION 1005.1 BUT SUCH WIDTH SHALL NOT BE LESS THAN 44 INCHES, EXCEPT THAT EXIT PASSAGEWAYS SERVING AN OCCUPANT LOAD OF LESS THAN 50 SHALL NOT BE LESS THAN 36 INCHES IN WIDTH. THE REQUIRED WIDTH OF EXIT PASSAGEWAYS SHALL BE UNOBSTRUCTED. (11B-1023.2).
2. AN ACCESSIBLE ROUTE WITH A CLEAR WIDTH LESS THAN 60 INCHES SHALL PROVIDE PASSING SPACES AT INTERVALS OF 200 FEET MAXIMUM. PASSING SPACES SHALL BE EITHER: A SPACE 60 INCHES MINIMUM BY 60 INCHES MINIMUM; OR , AN INTERSECTION OF TWO WALKING SURFACES PROVIDING A T-SHAPED SPACE COMPLYING WITH SECTION 11B-304.2 WHERE THE BASE AND ARMS OF THE T-SHAPED SPACE EXTEND 48 INCHES MINIMUM BEYOND THE INTERSECTION. (11B-403.5.3).

WIDTH OF ACCESSIBLE ROUTE

Scale. 1/4" = 1'-0" — 12

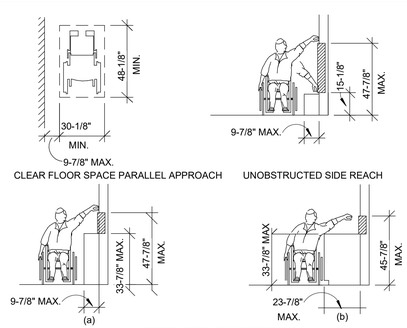

NOTES:

1. WHERE A CLEAR FLOOR OR GROUND SPACE ALLOWS A PARALLEL APPROACH TO AN ELEMENT AND THE SIDE REACH IS UNOBSTRUCTED, THE HIGH SIDE REACH SHALL BE 47-7/8" MAXIMUM AND THE LOW SIDE REACH SHALL BE 15-1/8" MINIMUM ABOVE THE FINISH FLOOR OR GROUND. EXCEPTION: AN OBSTRUCTION SHALL BE PERMITTED BETWEEN THE CLEAR FLOOR OR GROUND SPACE AND THE ELEMENT WHERE THE DEPTH OF THE OBSTRUCTION IS 9-7/8" MAXIMUM.
2. WHERE A CLEAR FLOOR OR GROUND SPACE ALLOWS A PARALLEL APPROACH TO AN ELEMENT AND THE HIGH SIDE REACH IS OVER AN OBSTRUCTION, THE HEIGHT OF THE OBSTRUCTION SHALL BE 33-7/8" MAXIMUM AND THE DEPTH OF THE OBSTRUCTION SHALL BE 23-7/8" MAXIMUM. THE HIGH SIDE REACH SHALL BE 47-7/8" MAXIMUM FOR A REACH DEPTH OF 9-7/8" MAXIMUM. WHERE THE REACH DEPTH EXCEEDS 9-7/8", THE HIGH SIDE REACH SHALL BE 45-7/8" MAXIMUM FOR A REACH

SIDE REACH

Scale. 1/4" = 1'-0" — 9

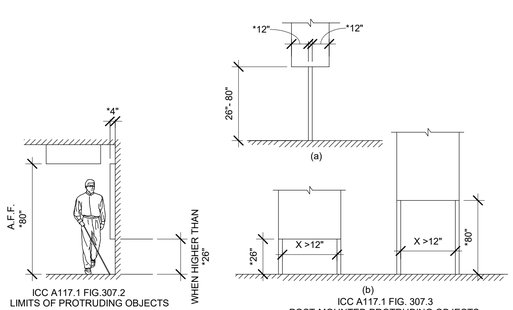

PROTRUDING OBJECTS

Scale. 3/16" = 1'-0" — 5

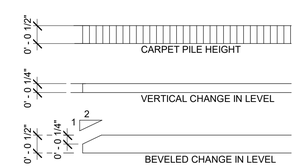

NOTES:

1. CARPET OR CARPET TILE SHALL BE SECURELY ATTACHED AND SHALL HAVE A FIRM CUSHION, PAD, OR BACKING OR NO CUSHION OR PAD. CARPET OR CARPET TILE SHALL HAVE A LEVEL LOOP, TEXTURED LOOP, LEVEL CUT PILE, OR LEVEL CUT/UNCUT PILE TEXTURE. PILE HEIGHT SHALL BE 1/2" MAXIMUM. EXPOSED EDGES OF CARPET SHALL BE FASTENED TO FLOOR SURFACES AND SHALL HAVE TRIM ON THE ENTIRE LENGTH OF THE EXPOSED EDGE.
2. CHANGES IN LEVEL OF 1/4" HIGH MAXIMUM SHALL BE PERMITTED TO BE VERTICAL AND WITHOUT EDGE TREATMENT.
3. CHANGES IN LEVEL BETWEEN 1/4" HIGH MINIMUM AND 1/2" HIGH MAXIMUM SHALL BE BEVELED WITH A SLOPE NOT STEEPER THAN 1:2.
4. THRESHOLDS SHALL BE 1/2" HIGH MAXIMUM.

FLOOR/GROUND SURFACE

Scale. 6" = 1'-0" — 1

KD
Kinetic Design
20381 Lake Forest Dr. Suite B16
Lake Forest, CA. 92630
Main. 951.710.6334 Web. kineticdesign.build
Email. info@kineticdesign.build

STATE OF MISSOURI — JOHN C SCHNEIDER — NUMBER A-2012010034 — ARCHITECT

STAMP DATE: 09/22/2021

NOT FOR CONSTRUCTION

THIS DRAWING IS PROVIDED FOR INFORMATIONAL PURPOSES ONLY. APPROVAL FROM THE ARCHITECT AND GOVERNING JURISDICTIONS MUST BE ATTAINED PRIOR TO THE ISSUANCE OF CONSTRUCTION DOCUMENTS. THE ARCHITECT AND HIS CONSULTANTS ASSUME NO RESPONSIBILITY FOR CONSTRUCTION BIDS OR CONSTRUCTION PERFORMED FROM THESE DRAWINGS.

REVISIONS

No.	DATE	DESCRIPTION
1	09-22-21	PCC #1, CLIENT AND LANDLORD REVISIONS

CLIENT INFORMATION

nektar JUICE BAR.

PROJECT NAME
NEKTER - LEE'S SUMMIT, MO
940 NW PRYOR ROAD, UNIT: G,
LEE'S SUMMIT, MISSOURI 64081

SHEET NAME
ACCESSIBILITY STANDARDS AND DETAILS

DRAWN | CHECKED
DATE 09/22/21
SCALE As indicated
PROJECT NUMBER
SHEET G004

THESE DRAWINGS AND THE INFORMATION CONTAINED ON THEM ARE THE SOLE PROPERTY OF KINETIC DESIGN. ANY USE OF THESE DOCUMENTS OR THE INFORMATION CONTAINED HEREIN, CAN ONLY BE USED WITH WRITTEN PERMISSION FROM KINETIC DESIGN. KINETIC DESIGN ASSUMES NO LIABILITY FOR THESE DRAWINGS OR INFORMATION CONTAINED HEREIN.

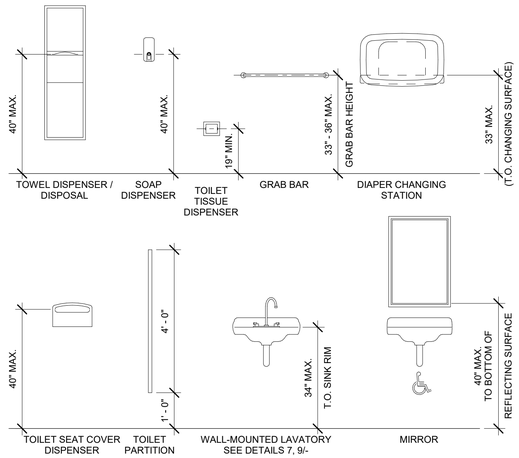

RESTROOM MOUNTING HEIGHTS

Scale. NTS — 12

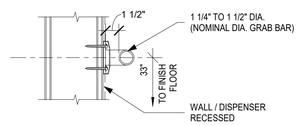

GRAB BAR DIMENSIONS DETAIL

A. DIAMETER OF GRAB BARS IS 1 1/4" - 1 1/2" OR SHAPE PROVIDES EQUIVALENT GRIPPING SURFACE. (ICC A117.1 609.2.1, 609.2.2)

B. CLEARANCE BETWEEN GRAB BAR(S) AND WALL IS 1 1/2". (ICC A117.1 609.3)

C. GRAB BARS MOUNTED AT 33" TO CENTER OF BAR ABOVE AND PARALLEL TO FLOOR. FOR TANK TYPE TOILETS, 36" MAY BE ALLOWED IF TANK OBSTRUCTS PLACEMENT OF BACK BAR. (ICC A117.1 609.4.1)

D. BARS ARE SMOOTH WITH A MINIMUM RADIUS OF 1/8".

E. MIN. STRUCTURAL STRENGTH OF GRAB BARS WILL SUPPORT A 250 LB. POINT LOAD. (ICC A117.1 609.8)

F. GRAB BARS DO NOT ROTATE WITHIN THEIR FITTINGS. (ICC A117.1 609.6)

G. SURFACE OF WALL ADJACENT TO GRAB BARS IS FREE OF SHARP OR ABRASIVE MATERIALS. (ICC A117.1 609.5)

GRAB BARS

Scale. 1 1/2" = 1'-0" — 9

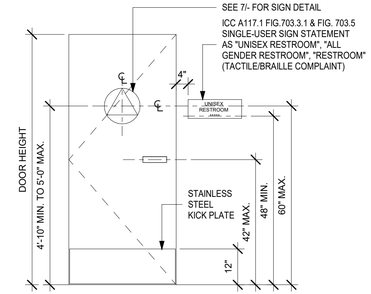

TABLE 703.7.4 HEIGHT OF TACTILE CHARACTERS ABOVE FINISH FLOOR OR GROUND

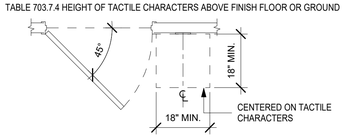

FIG. 703.3.1 LOCATION OF TACTILE SIGNS AT DOORS

LOCATION OF TACTILE SIGNS

Scale. 1/2" = 1'-0" — 6

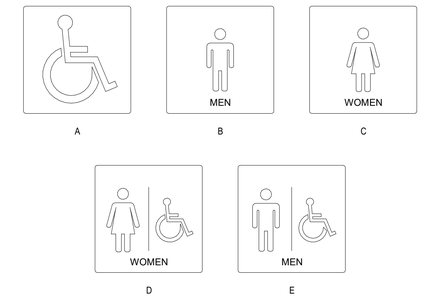

NOTE: ALL SIGNAGE IS 1/4" THICK. PLASTIC OR EQUAL.

1. CHARACTERS & BACKGROUND OF SIGNS IS EGGSHELL, MATTE OR OTHER NON-GLARE FINISH.

2. CHARACTERS SHALL CONTRAST WITH THE BACKGROUND LIGHT ON DARK, OR DARK ON LIGHT.

3. MOUNT SIGNAGE 60" ABOVE FINISHED FLOOR TO CENTERLINE OF SIGN.

4. BORDER DIMENSION OF PICTOGRAM TO BE 6" MINIMUM IN HEIGHT.

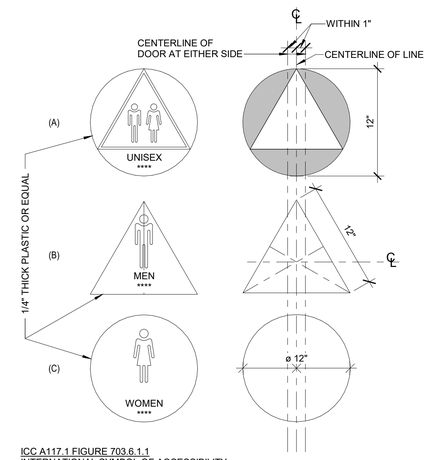

ICC A117.1 FIGURE 703.6.1.1
INTERNATIONAL SYMBOL OF ACCESSIBILITY

BACKGROUND TO BE BLUE EQUAL TO COLOR NO.15090 IN FEDERAL STANDARDS 595a.
GENDER SYMBOLS TO BE WHITE.

RESTROOM SIGNAGE

Scale. 1 1/2" = 1'-0" — 2

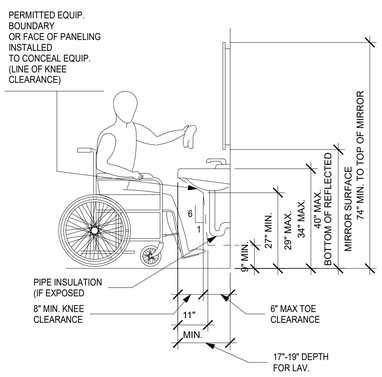

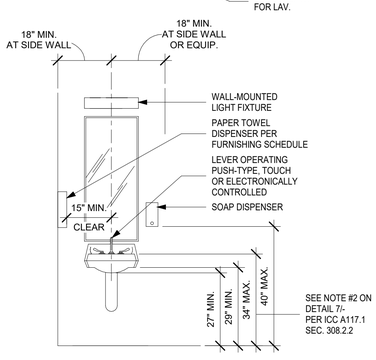

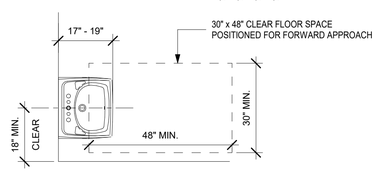

ACCESSIBLE LAVATORY REQUIREMENTS

Scale. NTS — 10

NOTES:

1. A CLEAR FLOOR SPACE, POSITIONED FOR FORWARD APPROACH, AND KNEE AND TOE CLEARANCE SHALL BE PROVIDED.

2. THE FRONT OF SINKS AND LAVS. SHALL BE 3/4" MAXIMUM ABOVE THE FLOOR, MEASURED TO THE FIXTURE RIM OR COUNTER SURFACE, WHICHEVER IS HIGHER.

3. HAND-OPERATED, SELF-CLOSING FAUCETS SHALL REMAIN OPEN FOR 10 SECONDS MINIMUM.

4. WATER SUPPLY AND DRAIN PIPES UNDER SINKS AND LAVS. SHALL BE INSULATED OR OTHERWISE CONFIGURED TO PROJECT AGAINST CONTACT. THERE SHALL BE NO SHARP OR ABRASIVE SURFACES UNDER SINKS.

5. OPERABLE PARTS SHALL BE OPERABLE WITH ONE HAND AND SHALL NOT REQUIRE TIGHT GRASPING, PINCHING, OR TWISTING OF THE WRIST. THE FORCE REQUIRED TO ACTIVATE OPERABLE PARTS SHALL BE 5 LBS. MAXIMUM.

6. OPERABLE PART CANNOT BE FURTHER BACK THAN THE TOE SPACE BELOW.

7. THE REQUIRED TOE SPACE AT A HWF OR SINK MUST EXTEND 19" MIN. AND 25" MAX. AS MEASURED FROM THE FRONT EDGE OR THE HWF OR SINK. THE SPACE PROVIDED MAY EXTEND BEYOND THE MAX. 25" BUT IS NOT CONSIDERED AS ACCESSIBLE TOE SPACE. THE REQUIRED TOE SPACE AT LAVATORY MUST EXTEND 17" MIN. AND 19" MAX. AS MEASURED FROM THE FRONT EDGE OF THE LAV. OR SINK. THE SPACE PROVIDED MAY EXTEND BEYOND THE MAX. 19" BUT IS NOT CONSIDERED AS ACCESSIBLE TOE SPACE.

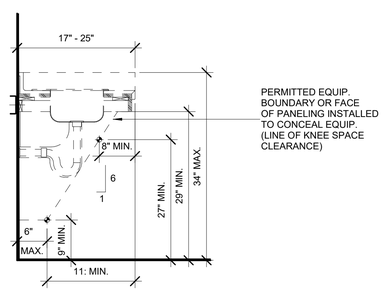

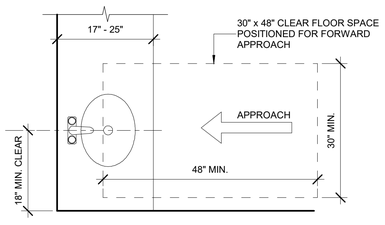

ACCESSIBLE SINK REQUIREMENTS

Scale. 3/4" = 1'-0" — 7

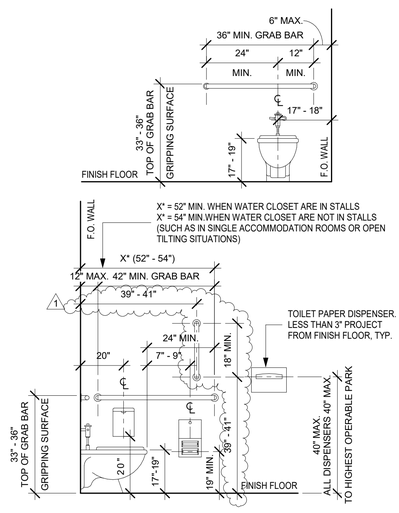

STANDARD ACCESSIBLE TOILET STALL NOTES:

1. TOTAL STALL DIMENSIONS MUST INCORPORATE ALL CLEARANCES SHOWN TO COMPLY WITH BOTH STATE AND FEDERAL REQUIREMENTS.

2. REGARDLESS OF STALL CONFIGURATION, A 48" LONG MINIMUM CLEARANCE FLOOR PSACE SHALL BE PROVIDED IN FRONT OF THE WATER CLOSET. INTERIOR DIMENSIONS OF SINGLE ACCOMMODATION TOILET ROOMS SHALL INCLUDE A CLEAR SPACE OF AT LEAST 60" IN DIAMETER OR A T-SHAPED CLEAR SPACE. NO DOOR MAY ENCROACH INTO THIS REQUIRED CLEAR SPACE BY MORE THAN 12".

* SIDE GRAB BARS IN SINGLE ACCOMMODATION TOILET ROOMS MUST BE INSTALLED SUCH THAT THE FRONT END OF THE BAR IS LOCATED A MINIMUM OF 54" FROM THE BACK WALL.

WATER CLOSET REQUIREMENTS

Scale. 1/2" = 1'-0" — 5

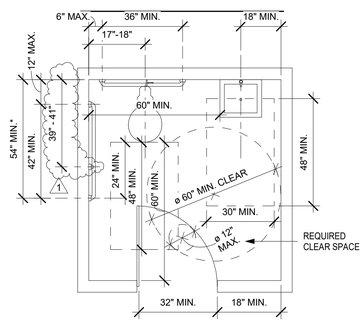

MEASUREMENT RANGE		MINIMUM IN INCHES MAXIMUM IN INCHES
DOT BASE DIAMETER		0.059 TO 0.063
DISTANCE BETWEEN TWO DOTS IN THE SAME CELL	1	0.090 TO 0.100
DISTANCE BETWEEN CORRESPONDING DOTS IN ADJACENT CELLS	1	0.241 TO 0.300
DOT HEIGHT		0.025 TO 0.037
DISTANCE BETWEEN CORRESPONDING DOTS FROM ONE CELL DIRECTLY BELOW	1	0.395 TO 0.400

1. MEASURED CENTER TO CENTER

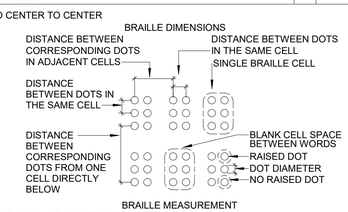

2. BRAILLE SHALL BE CONTRACTED (GRADE 2)

3. BRAILLE DOTS SHALL HAVE A DOMED OR ROUNDED SHAPE AND SHALL COMPLY WITH FIGURE 11B-703.3.1. THE INDICATION OF AN UPPERCASE LETTER OR LETTERS SHALL ONLY BE USED BEFORE THE FIRST WORD OF SENTENCES, PROPER NOUNS AND NAMES, INDIVIDUAL LETTERS OF THE ALPHABET, INITIALS, AND ACRONYMS.

4. BRAILLE SHALL BE POSITIONED BELOW THE CORRESPONDING TEXT IN A HORIZONTAL FORMAT, FLUSH LEFT OR CENTERED. IF TEXT IS MULTI-LINED, BRAILLE SHALL BE PLACED BELOW THE ENTIRE TEXT. BRAILLE SHALL BE SEPARATED 3/8 INCH (9.5 MM) MINIMUM AND 1/2 INCH MAXIMUM FROM ANY OTHER TACTILE CHARACTERS AND 3/8 INCH (9.5 MM) MINIMUM FROM RAISED BORDERS AND DECORATIVE ELEMENTS.

SIGNS/BRAILLE

Scale. 1" = 10'-0" — 1

KD
Kinetic Design
20381 Lake Forest Dr. Suite B16
Lake Forest, CA. 92630
Main. 951.710.6334 Web. kineticdesign.build
Email. info@kineticdesign.build

STATE OF MISSOURI — JOHN C SCHNEIDER — NUMBER A-2012010034 — ARCHITECT

STAMP DATE: 09/22/2021

NOT FOR CONSTRUCTION

THIS DRAWING IS PROVIDED FOR INFORMATIONAL PURPOSES ONLY. APPROVAL FROM THE ARCHITECT AND GOVERNING JURISDICTIONS MUST BE ATTAINED PRIOR TO THE ISSUANCE OF CONSTRUCTION DOCUMENTS. THE ARCHITECT AND HIS CONSULTANTS ASSUME NO RESPONSIBILITY FOR CONSTRUCTION BIDS OR CONSTRUCTION PERFORMED FROM THESE DRAWINGS.

REVISIONS

No.	DATE	DESCRIPTION
1	09-22-21	PCC #1, CLIENT AND LANDLORD REVISIONS

CLIENT INFORMATION

nektar JUICE BAR.

PROJECT NAME
NEKTER - LEE'S SUMMIT, MO
940 NW PRYOR ROAD, UNIT: G,
LEE'S SUMMIT, MISSOURI 64081

SHEET NAME
ACCESSIBILITY STANDARDS AND DETAILS

DRAWN | CHECKED
DATE 09/22/21
SCALE As indicated
PROJECT NUMBER
SHEET G005

THESE DRAWINGS AND THE INFORMATION CONTAINED ON THEM ARE THE SOLE PROPERTY OF KINETIC DESIGN. ANY USE OF THESE DOCUMENTS OR THE INFORMATION CONTAINED HEREIN, CAN ONLY BE USED WITH WRITTEN PERMISSION FROM KINETIC DESIGN. KINETIC DESIGN ASSUMES NO LIABILITY FOR THESE DRAWINGS OR INFORMATION CONTAINED HEREIN.

9/22/2021 2:37:42 PM C:\Users\arobles\Documents\Nekter Lee Summit MO - ARCH_Central-R21_arobles.kineticdesign.rvt

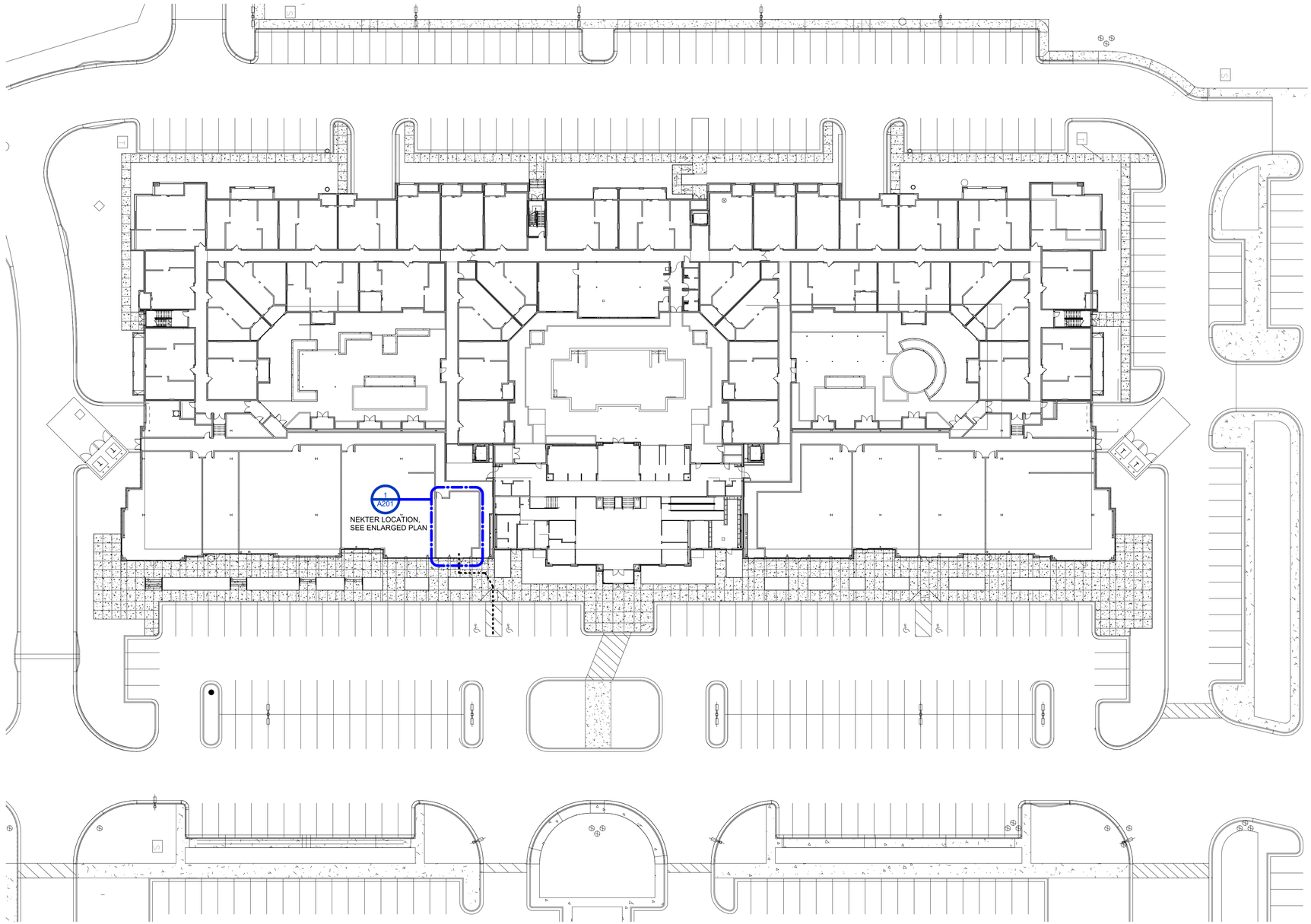

SITE PLAN 1 Scale 1" = 30'-0"

SITE PLAN NOTES

SITE PLAN PROVIDED IS FOR REFERENCE ONLY. ACCESSIBLE PARKING SPACES, ACCESSIBLE SIGNAGE, AND PATH OF TRAVEL ARE EXISTING AND SUBJECT TO FIELD VERIFICATION.

PROJECT SUMMARY

PARCEL NUMBER:	51-800-04-38-00-0-00-000
BUILDING CONSTRUCTION TYPE:	-
TOTAL BUILDING AREA:	-
TOTAL PROJECT AREA:	797 S.F.
PROJECT OCCUPANCY:	B

TENANT
RAYMOND ALLEN
5005 W 119TH STREET, SPACE #28
OVERLAND PARK, KS 66209
PHONE: (714) 287-5024
EMAIL: RANDEN@MYNEKTER.COM

OWNER
SUMMIT AT WEST PRYOR, LLC.
PHONE: (317) 472-0271

LEGEND

EXISTING PATH OF TRAVEL

KD
Kinetic Design
20381 Lake Forest Dr. Suite B16
Lake Forest, CA. 92630
Main. 951.710.6334 Web. kineticdesign.build
Email. info@kineticdesign.build

STATE OF MISSOURI
JOHN C SCHNEIDER
NUMBER A-2012010034
ARCHITECT

STAMP DATE: 09/22/2021

NOT FOR CONSTRUCTION

THIS DRAWING IS PROVIDED FOR INFORMATIONAL PURPOSES ONLY. APPROVAL FROM THE ARCHITECT AND GOVERNING JURISDICTIONS MUST BE ATTAINED PRIOR TO THE ISSUANCE OF CONSTRUCTION DOCUMENTS. THE ARCHITECT AND HIS CONSULTANTS ASSUME NO RESPONSIBILITY FOR CONSTRUCTION BIDS OR CONSTRUCTION PERFORMED FROM THESE DRAWINGS.

REVISIONS

No.	DATE	DESCRIPTION
1	09-22-21	PCC #1, CLIENT AND LANDLORD REVISIONS

CLIENT INFORMATION

nektar JUICE BAR.

PROJECT NAME
NEKTER - LEE'S SUMMIT, MO
940 NW PRYOR ROAD, UNIT: G,
LEE'S SUMMIT, MISSOURI 64081

SHEET NAME
SITE PLAN

DRAWN
CHECKED
DATE 09/22/21
SCALE As indicated
PROJECT NUMBER
SHEET A101

THESE DRAWINGS AND THE INFORMATION CONTAINED ON THEM ARE THE SOLE PROPERTY OF KINETIC DESIGN. ANY USE OF THESE DOCUMENTS OR THE INFORMATION CONTAINED HEREIN, CAN ONLY BE USED WITH WRITTEN PERMISSION FROM KINETIC DESIGN. KINETIC DESIGN ASSUMES NO LIABILITY FOR THESE DRAWINGS OR INFORMATION CONTAINED HEREIN.

9/22/2021 2:36:29 PM C:\Users\arobles\Documents\Nekter Lee Summit MO - ARCH_Central-R21_arobles.kineticdesign.rvt

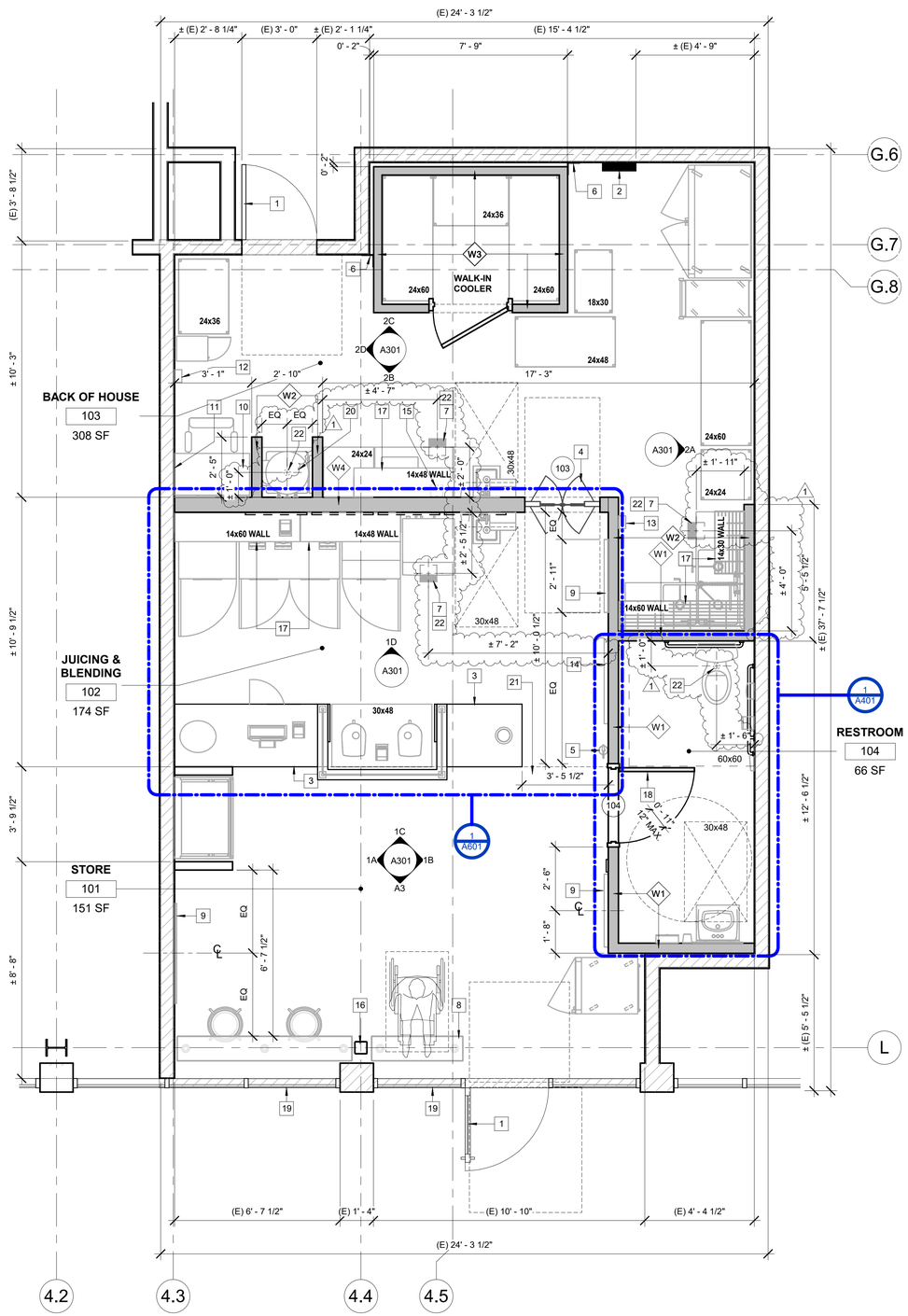

FLOOR PLAN Scale. 3/8" = 1'-0" 1

FLOOR PLAN NOTES

1. ALL FIXTURES NEED TO BE COORDINATED WITH THE OWNER, ARCHITECT, CONSULTANTS AND MANUFACTURER PRIOR TO CONSTRUCTION.
2. SEE SHEET A501 FOR THE DOOR SCHEDULE.
3. SEE SHEET A701 FOR EQUIPMENT, FURNITURE, AND PLUMBING FIXTURES.
4. NO GAPS, HOLES, HARBORAGE, OR ENTRWAYS FOR VERMIN ARE TO REMAIN OR BE ALLOWED (INCLUDING UNDERNEATH DOORS).

KEYNOTES

#	KEYNOTE DESCRIPTION
1	(E) DOOR TO REMAIN
2	(N) SURFACE-MOUNTED ELECTRICAL PANEL, SEE ELECTRICAL PLANS
3	(N) 2'-10" H ACCESSIBLE COUNTER, SEE MILLWORK DETAILS
4	(N) IMPACT DOOR W/ WINDOW, SEE DOOR SCHEDULE
5	(N) WALL-MOUNTED FIRE EXTINGUISHER, MOUNT HANDLE AT +4'-0" AFF
6	PROVIDE FULL-HEIGHT STAINLESS STEEL COVER PLATE/ANGLE
7	(N) FLOOR SINK, SEE EQUIPMENT SCHEDULE AND PLUMBING DRAWINGS
8	PROVIDE TOE AND KNEE CLEARANCE UNDER ACCESSIBLE DINING SURFACE, SEE SHEET G005 FOR MORE INFORMATION
9	(N) NEKTER ARTWORK, VENDOR PROVIDED AND CONRTRACTOR INSTALLED; CONTRACTOR TO PROVIDE BACKING AS NEEDED
10	LOW VOLTAGE AT MANAGER'S DESK, SEE ELEVATION 5/A606
11	(N) PHONE BOARD, PROVIDE 3/4" FIRE RETARDANT TREATED PLYWOOD
12	(N) THERMOSTAT, SEE MECHANICAL DRAWINGS
13	(N) LIGHT BANK SWITCH, SEE ELECTRICAL DRAWINGS
14	NEKTER MEDALLION, SEE SCHEDULE ON A701 FOR MORE INFORMATION
15	(N) WATER FILTER SYSTEM ABOVE PREP SINK
16	(E) STRUCTURAL COLUMN TO REMAIN, PROTECT DURING CONSTRUCTION, PAINT P-1 1
17	(N) WALL-MOUNTED SHELVING, SEE ELEVATION FOR MOUNTING HEIGHT, CONTRACTOR TO PROVIDE BACKING AS REQUIRED
18	PAINT DOOR, DOOR FRAME, AND JAMB; SEE DOOR SCHEDULE ON A501 FOR MORE INFORMATION
19	(E) STOREFRONT SYSTEM TO REMAIN, PROTECT DURING CONSTRUCTION
20	(N) WATER HEATER ON (N) PLATFORM ABOVE MOP SINK, SEE DETAIL 9/A603 FOR MORE INFORMATION
21	DASHED LINE INDICATING CEILING TRANSITION, SEE REFLECTED CEILNG PLAN ON SHEET A202 FOR MORE INFORMATION
22	(N) FLOOR PENETRATION, PROVIDE FLOOR PENETRATION LAYOUT FOR LANDLORD REVIEW PRIOR TO MAKING PENETRATIONS. MARK FLOOR PENETRATIONS FOR PLUMBING AND OBTAIN LANDLORD'S APPROVAL PRIOR TO IMPLEMENTING PENETRATIONS. CONFIRM THAT PENETRATION ARE A MININUM OF 4" FROM STEEL BEAMS.

WALL TYPE LEGEND

TYPE	DESCRIPTION
W1	3 5/8" MTL. STUDS @ 16" O.C. WITH 5/8" GYP. BD.EACH SIDE. FULL HEIGHT TO STRUCTURE ABOVE. NOTE: GYP. BOARD ON THE WET SIDE SHOULD BE WATER RESISTANT AT SINK OR WET AREA. SEE DETAIL 1/A602.
W2	3 5/8" MTL. STUDS @ 16" O.C. WITH 5/8" GYP. BD. EACH SIDE (AS APPLIES) TO 6" ABOVE ADJACENT FINISH CEILING. BRACE WALLS TO STRUCTURE ABOVE. NOTE: USE WATER RESISTANT GYP. BD. AT WET SIDE. SEE DETAIL 1/A602.
W3	PER MANUFACTURER'S SPECS.
W4	6" MTL. STUDS @ 16" O.C., 5/8" GYP. BD.EACH SIDE TO 6" ABOVE ADJACENT FINISH CEILING. BRACE WALLS TO STRUCTURE AVBOVE. NOTE: USE WATER-RESISTANT GYP. BD. AT WET SIDE. SEE DETAIL 1/A602.

LEGEND

ROOM NAME ###	ROOM TAG
(E) DEMISING WALL, GC TO VERIFY THE EXISTING DEMISING WALL IS BUILT FLOOR TO DECK ABOVE. NOTIFY ARCHITECT IMMEDIATELY IF OTHERWISE.	(E) PARTITION WALL TO REMAIN
	# KEYNOTE TAG
	101 DOOR TAG
	W# WALL TAG
(N) NON-RATED PARTITION WALL	W-# WINDOW TAG

KD
Kinetic Design
20381 Lake Forest Dr. Suite B16
Lake Forest, CA. 92630
Main. 951.710.6334 Web. kineticdesign.build
Email. info@kineticdesign.build

STATE OF MISSOURI
JOHN C SCHNEIDER
NUMBER A-2012010034
ARCHITECT

STAMP DATE: 09/22/2021

NOT FOR CONSTRUCTION

THIS DRAWING IS PROVIDED FOR INFORMATIONAL PURPOSES ONLY. APPROVAL FROM THE ARCHITECT AND GOVERNING JURISDICTIONS MUST BE ATTAINED PRIOR TO THE ISSUANCE OF CONSTRUCTION DOCUMENTS. THE ARCHITECT AND HIS CONSULTANTS ASSUME NO RESPONSIBILITY FOR CONSTRUCTION BIDS OR CONSTRUCTION PERFORMED FROM THESE DRAWINGS.

REVISIONS

No.	DATE	DESCRIPTION
1	09-22-21	PCC #1, CLIENT AND LANDLORD REVISIONS

CLIENT INFORMATION

nektar JUICE BAR.

PROJECT NAME
NEKTER - LEE'S SUMMIT, MO
940 NW PRYOR ROAD, UNIT: G,
LEE'S SUMMIT, MISSOURI 64081

SHEET NAME
FLOOR PLAN

DRAWN
CHECKED
DATE 09/22/21
SCALE As indicated
PROJECT NUMBER
SHEET
A201

THESE DRAWINGS AND THE INFORMATION CONTAINED ON THEM ARE THE SOLE PROPERTY OF KINETIC DESIGN. ANY USE OF THESE DOCUMENTS OR THE INFORMATION CONTAINED HEREIN, CAN ONLY BE USED WITH WRITTEN PERMISSION FROM KINETIC DESIGN. KINETIC DESIGN ASSUMES NO LIABILITY FOR THESE DRAWINGS OR INFORMATION CONTAINED HEREIN.

9/22/2021 7:38:08 PM C:\Users\arobles\Documents\Nektar Lee Summit MO - ARCH_Central-R21_arobles.kineticdesign.rvt

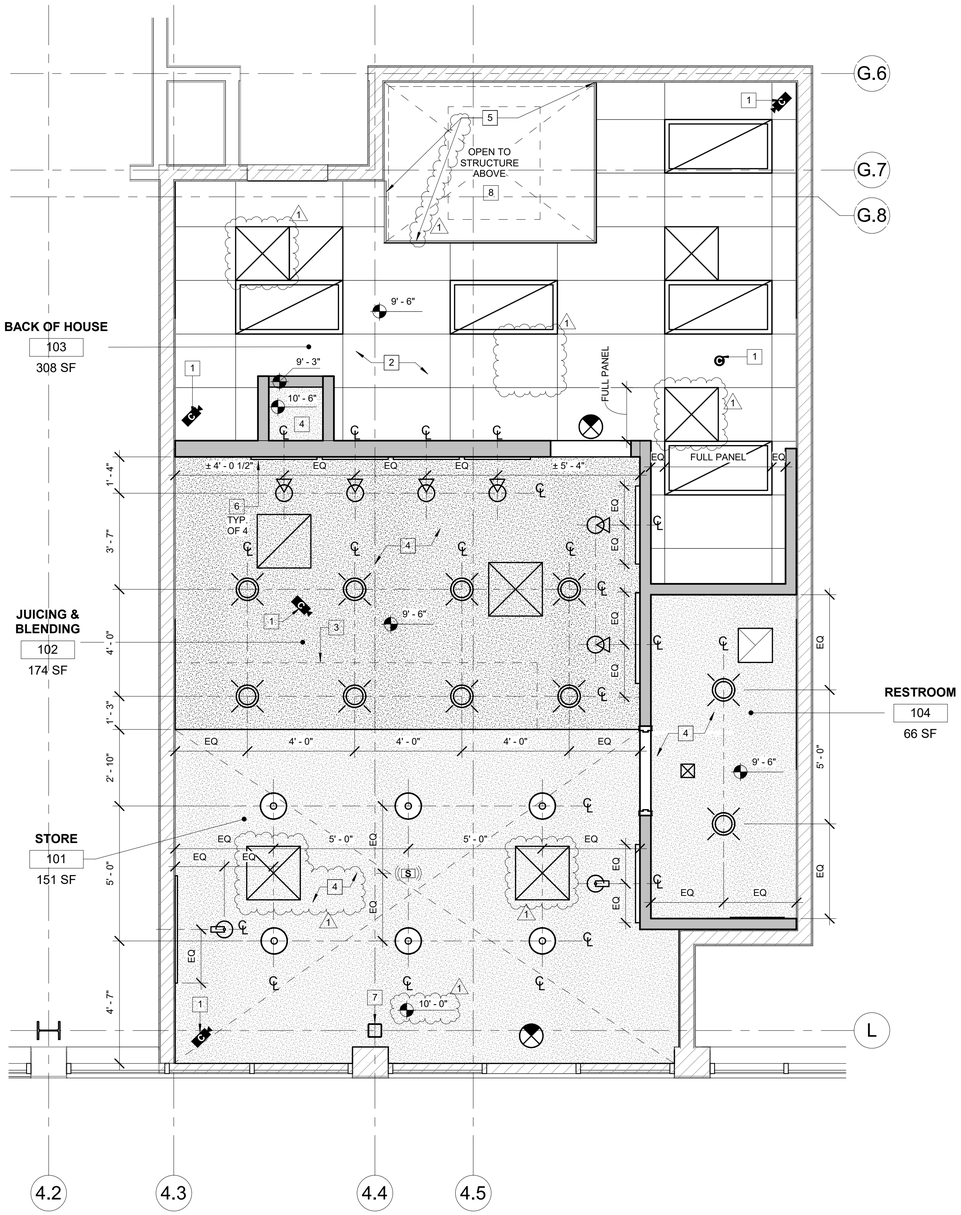

LEGEND

ROOM NAME ###	ROOM TAG
	(E) DEMISING WALL, GC TO VERIFY THE EXISTING DEMISING WALL IS BUILT FLOOR TO DECK ABOVE. NOTIFY ARCHITECT IMMEDIATELY IF OTHERWISE.
	(N) NON-RATED PARTITION WALL
	(E) PARTITION WALL TO REMAIN
#	KEYNOTE TAG
	(N) 2'X4' TROFFER FIXTURE, SEE ELECTRICAL PLANS FOR ADDITIONAL INFORMATION
	(N) RECESSED DOWNLIGHT FIXTURE, SEE ELECTRICAL PLANS FOR ADDITIONAL INFORMATION
	(N) EYEBALL LIGHT FIXTURE, CENTERED ON MENU BOARD, SEE ELECTRICAL PLANS FOR ADDITIONAL INFORMATION
	(N) SPOT LIGHT FIXTURE, SEE ELECTRICAL PLANS FOR ADDITIONAL INFORMATION
	(N) EXIT SIGN, SEE ELECTRICAL PLANS FOR SPECIFICATION
	(N) SUPPLY AIR DIFFUSERS, SEE MECHANICAL PLANS FOR ADDITIONAL INFORMATION
	(N) RETURN AIR DIFFUSERS, SEE MECHANICAL PLANS FOR ADDITIONAL INFORMATION
	(N) EXHAUST DIFFUSERS, SEE MECHANICAL PLANS FOR ADDITIONAL INFORMATION
S	(N) AUDIO SPEAKERS, SEE ELECTRICAL PLANS FOR ADDITIONAL INFORMATION (QTY. 1)
C	(N) SECURITY CAMERA, SEE ELECTRICAL PLANS FOR ADDITIONAL INFORMATION (QTY. 4)
C	(N) 360 DEGREE SECURITY CAMERA, SEE ELECTRICAL PLANS FOR ADDITIONAL INFORMATION (QTY. 1)

CEILING PLAN NOTES

1. EMERGENCY LIGHTS TO BE INSTALLED ON SEPARATE CIRCUIT.
2. ALL LIGHT FIXTURES INCLUDING EXIT LIGHTS, EMERGENCY LIGHTS, ETC., SHALL BE FURNISHED AND INSTALLED BY THE CONTRACTOR.
3. ALL FINISHING AND PAINTING REQUIREMENTS SHALL BE DIRECTED TO THE FINISH SCHEDULE SPECIFICATIONS AND INTERIOR ELEVATIONS.
4. CONTRACTOR TO USE LASER FOR LEVELING OF ALL SOFFITS, CEILINGS AND SUSPENDED GRIDS.
5. ELECTRICAL CONTRACTOR TO VERIFY IF SERVICE PROVIDED IS ADEQUATE. NOTIFY ARCHITECT IMMEDIATELY IF NOT.
6. ALL EQUIPMENT SHALL BEAR U.L. LABELS.
7. ELECTRICAL CONTRACTOR MUST PROVIDE AN IDENTIFICATION NAME PLATE ON TENANT'S MAIN ELECTRICAL SERVICES FUSIBLE DISCONNECT SWITCH IN LANDLORD'S DISTRIBUTION PANEL AND RTU. NAMEPLATE MUST BE 1/8" THICK PLASTIC, BLACK ON WHITE ETCHED TO LEAVE WHITE LETTERS. THE SIZE SHALL BE ONE INCH HIGH BY REQUIRED LENGTH, WITH TENANT'S SPACE NUMBER ENGRAVED ON IT. PERMANENTLY AFFIX TO DISTRIBUTION PANEL.
8. DIFFUSERS AND LIGHTS TO HAVE HANG WIRES ON ALL FOUR CORNERS
9. ALL FIRE DAMPERS MUST BE IDENTIFIED BY A STICKER INSTALLED ON CEILING BELOW. DUCT FIRE DAMPER MUST BE INSTALLED WITH A BREAKAWAY CONNECTION PLENUM THAT CANNOT CONTAIN ANY COMBUSTIBLES.
10. GENERAL CONTRACTOR TO INSTALL ACCESS DOORS AS NECESSARY AND CONFIRM EXACT LOCATIONS. ACCESS PANEL MUST BE FLUSH, FRAMELESS GYPSUM PANELS IN SALES AREA. G.C. MUST PROVIDE AN ALLOWANCE FOR ACCESS PANELS IN BID.
11. ALL LIGHTING SHOULD BE IN WORKING ORDER AND ALL COVERS / LENSES IN PLACE.
12. GENERAL CONTRACTOR SHALL COMPLY WITH CURRENT STATE ENERGY CODES.
13. GENERAL CONTRACTOR TO VERIFY FIRE ALARM REQUIREMENTS AND NOTIFY ARCHITECT AS SOON AS POSSIBLE OF ANY DISCREPANCIES.
14. FIRE ALARM, FIRE STROBE, FIRE PULL SHALL BE BY OTHERS ON A SEPARATE SUBMITTAL.

KEYNOTES

#	KEYNOTE DESCRIPTION
1	PROVIDE DATA LINES TO SECURITY CAMERAS
2	(N) 2' x 4' SUSPENDED CEILING
3	MILLWORK BELOW SHOWN FOR REFERENCE
4	(N) SUSPENDED GYPSUM BOARD CEILING
5	PROVIDE (N) TRIM KIT ABOVE WALK-IN, TRIM KIT BY WALK-IN MANUFACTURER TO BE INSTALLED BY GC
6	(N) 23 1/2" x 35" MENU BOARDS
7	(E) STRUCTURAL COLUMN TO REMAIN, PROTECT DURING CONSTRUCTION. PAINT P-1 1
8	WALK-IN COOLER BELOW SHOWN FOR REFERENCE

REFLECTED CEILING PLAN

Scale

KD
Kinetic Design
20381 Lake Forest Dr. Suite B16
Lake Forest, CA. 92630
Main. 951.710.6334 Web. kineticdesign.build
Email. info@kineticdesign.build

STATE OF MISSOURI
JOHN C SCHNEIDER
NUMBER A-2012010034
ARCHITECT

STAMP DATE: 09/22/2021

NOT FOR CONSTRUCTION

THIS DRAWING IS PROVIDED FOR INFORMATIONAL PURPOSES ONLY. APPROVAL FROM THE ARCHITECT AND GOVERNING JURISDICTIONS MUST BE ATTAINED PRIOR TO THE ISSUANCE OF CONSTRUCTION DOCUMENTS. THE ARCHITECT AND HIS CONSULTANTS ASSUME NO RESPONSIBILITY FOR CONSTRUCTION BIDS OR CONSTRUCTION PERFORMED FROM THESE DRAWINGS.

REVISIONS

No.	DATE	DESCRIPTION
1	09-22-21	PCC #1, CLIENT AND LANDLORD REVISIONS

CLIENT INFORMATION

nektar JUICE BAR

PROJECT NAME
NEKTER - LEE'S SUMMIT, MO
940 NW PRYOR ROAD, UNIT: G,
LEE'S SUMMIT, MISSOURI 64081

SHEET NAME
REFLECTED CEILING PLAN

DRAWN	CHECKED
DATE	09/22/21
SCALE	As indicated
PROJECT NUMBER	
SHEET	A202

THESE DRAWINGS AND THE INFORMATION CONTAINED ON THEM ARE THE SOLE PROPERTY OF KINETIC DESIGN. ANY USE OF THESE DOCUMENTS OR THE INFORMATION CONTAINED HEREIN, CAN ONLY BE USED WITH WRITTEN PERMISSION FROM KINETIC DESIGN. KINETIC DESIGN ASSUMES NO LIABILITY FOR THESE DRAWINGS OR INFORMATION CONTAINED HEREIN.

9/22/2021 2:36:35 PM C:\Users\arobles\Documents\Nektar Lee Summit MO - ARCH_Central-R21_arobles.kineticdesign.rvt

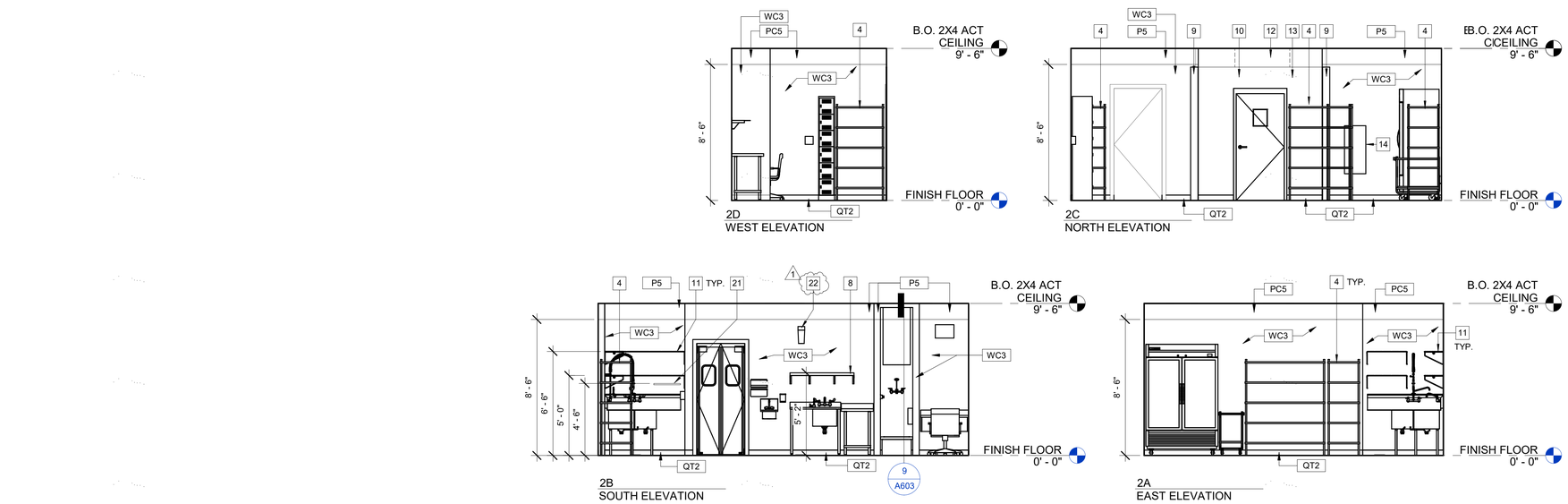

INTERIOR ELEVATIONS - BACK OF HOUSE 103 Scale 1/4" = 1'-0" 2

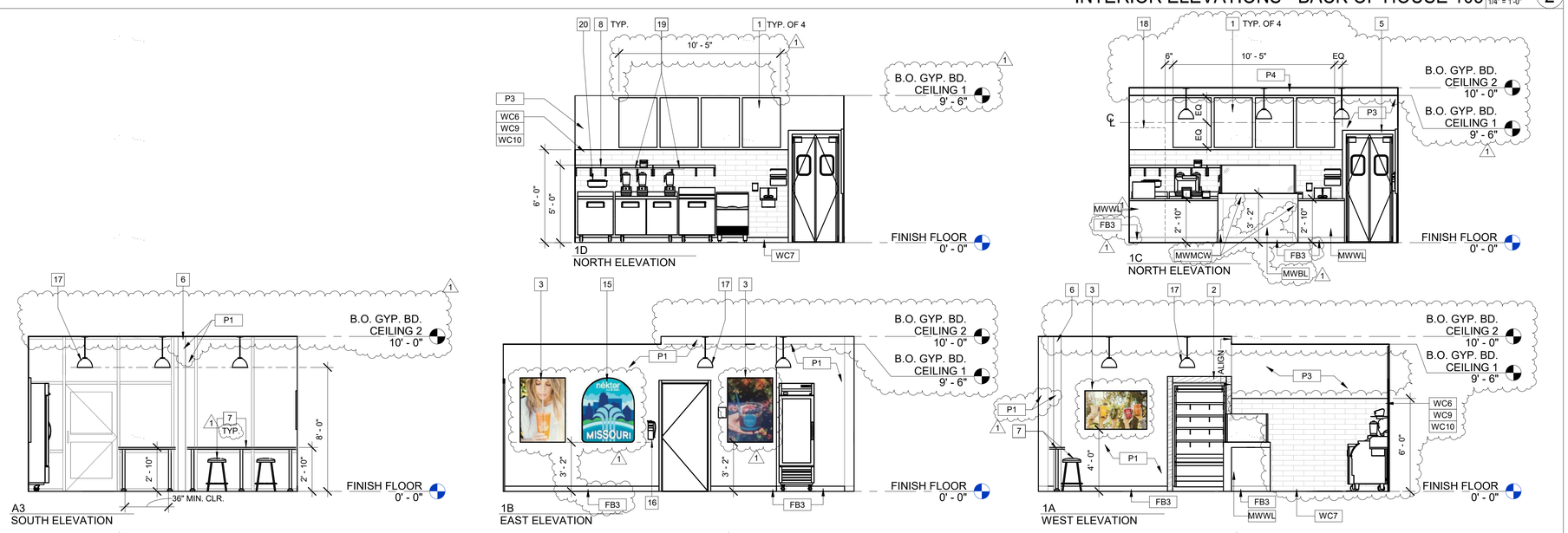

INTERIOR ELEVATIONS - STORE 101, JUICING & BLENDING 102 Scale 1/4" = 1'-0" 1

KEYNOTES

#	KEYNOTE DESCRIPTION
1	(N) 23 1/2" x 35" MENU BOARDS
2	GRAB-N-GO MILLWORK, SEE MILLWORK DETAILS ON A603
3	NEKTER ARTWORK, VENDOR PROVIDED AND CTONRACTOR INSTALLED; CONTRACTOR TO PROVIDE BACKING AS REQUIRED
4	(N) BACK OF HOUSE SHELVING: 4 TIER HIGH ON 86" POSTS (EPOXY SHELVES FOR SHELVING NEAR ANY SINKS AND CHROMATE IN OTHER AREAS OF BACK OF HOUSE)
5	(N) IMPACT DOOR W/ WINDOW, SEE DOOR SCHEDULE ON A501
6	(E) STRUCTURAL COLUMN, PROTECT DURING CONSTRUCTION, PAINT P-1 1
7	FURNITURE SHOWN FOR REFERENCE ONLY
8	(N) WALL-MOUNTED STAINLESS STEEL SHELVING, PROVIDE BACKING AS REQUIRED
9	PROVIDE FULL-HEIGHT STAINLESS STEEL COVER PLATE/ANGLE
10	WALK-IN UNIT, SEE EQUIPMENT PLAN ON A701
11	(N) WALL-MOUNTED WIRE SHELVING, PROVIDE BACKING AS REQUIRED
12	PROVIDE MANUFACTURER FULL-HEIGHT TRIM KIT WITH EQUIPMENT ACCESS PANELS ABOVE WALK-IN UNIT
13	FACTORY FINISH ON WALK-IN UNIT
14	(E) SURFACE-MOUNTED ELECTRICAL PANEL TO REMAIN, PROTECT DURING CONSTRUCTION
15	NETKER MEDALLION, SEE EQUIPMENT SCHEDULE ON A701 FOR MORE INFORMATION
16	(N) WALL-MOUNTED FIRE EXTINGUISHER, MOUNT HANDLE AT +4'-0" AFF
17	(N) PENDANT LIGHT FIXTURE, SEE REFLECTEDC CEILING PLAN ON A202 AND ELECTRICAL DRAWINGS FOR MORE INFORMATION
18	REFRIGERATOR MILLWORK SHOWN FOR REFERENCE
19	(N) 24" TICKET RAIL, GC TO INSTALL ON S/S SHELF FRONT LIP
20	PROVIDE PLYWOOD BACKING FOR WALL-MOUNTED FIXTURES
21	(N) WALL-MOUNTED KNIFE RACK, PROVIDE BACKING AS REQUIRED
22 1	(N) WATER FILTER SYSTEM @ 84" A.F.F. TO BOTTOM OF FILTER; LOCATE ABOVE DRAIN BOARD OF PREP SINK. FILTERED WATER LINE TO ICE MACHINE @ 18" A.F.F., AND TO SINGLE FAUCET @ 49" A.F.F. AT PREP SINK

KD
Kinetic Design
20381 Lake Forest Dr. Suite B16
Lake Forest, CA. 92630
Main. 951.710.6334 Web. kineticdesign.build
Email. info@kineticdesign.build

STATE OF MISSOURI
JOHN C SCHNEIDER
NUMBER A-2012010034
ARCHITECT

STAMP DATE: 09/22/2021

NOT FOR CONSTRUCTION

THIS DRAWING IS PROVIDED FOR INFORMATIONAL PURPOSES ONLY. APPROVAL FROM THE ARCHITECT AND GOVERNING JURISDICTIONS MUST BE ATTAINED PRIOR TO THE ISSUANCE OF CONSTRUCTION DOCUMENTS. THE ARCHITECT AND HIS CONSULTANTS ASSUME NO RESPONSIBILITY FOR CONSTRUCTION BIDS OR CONSTRUCTION PERFORMED FROM THESE DRAWINGS.

REVISIONS

No.	DATE	DESCRIPTION
1	09-22-21	PCC #1, CLIENT AND LANDLORD REVISIONS

CLIENT INFORMATION

nektar JUICE BAR.

PROJECT NAME
NEKTER - LEE'S SUMMIT, MO
940 NW PRYOR ROAD, UNIT: G,
LEE'S SUMMIT, MISSOURI 64081

SHEET NAME
INTERIOR ELEVATIONS

DRAWN
CHECKED
DATE 09/22/21
SCALE As indicated
PROJECT NUMBER
SHEET
A301

THESE DRAWINGS AND THE INFORMATION CONTAINED ON THEM ARE THE SOLE PROPERTY OF KINETIC DESIGN. ANY USE OF THESE DOCUMENTS OR THE INFORMATION CONTAINED HEREIN, CAN ONLY BE USED WITH WRITTEN PERMISSION FROM KINETIC DESIGN. KINETIC DESIGN ASSUMES NO LIABILITY FOR THESE DRAWINGS OR INFORMATION CONTAINED HEREIN.

C:\Users\arobles\Documents\Nekter Lee Summit MO - ARCH_Central-R21_arobles.kineticdesign.rvt
9/22/2021 7:04:07 PM

GENERAL NOTES

1. PROVIDE 1-1/2 CLEARANCE BETWEEN WALL AND GRAB BARS.
2. DRAIN AND HOT WATER PIPES UNDER ALL LAVATORIES TO BE INSULATED.
3. GRAB BARS SHALL BE DESIGNED TO SUPPORT A 250# LOAD AND SHALL NOT ROTATE WITHIN THEIR FITTINGS.
4. FLUSH VALVE CONTROL ON WATER CLOSET SHALL BE OPERABLE BY AN OSCILLATINGHANDLE WITH MAXIMUM FORCE OF 5 LBS. TOP OF ALL ELECTRICAL SWITCHES ANDCONVENIENCE OUTLET NOT TO EXCEED 40", TYPICAL THROUGHOUT.
5. NO SHARP OR ABRASIVE SURFACES IN FRONT OF LAVATORIES.
6. A CLEAR SPACE OF 30" X 48" SHALL BE PROVIDED IN FRONT OF LAVATORY TO ALLOW A FORWARD APPROACH TO COMPLY WITH.
7. OPERATING PARTS OF DISPENSING AND DISPOSAL FIXTURES (TOWELS, WASTE, COINSLOTS, ETC.) ARE TO BE AT 40" A.F.F. MAX.
8. MOUNT MIRRORS AT 39" ABOVE FINISH FLOOR TO BOTTOM OF REFLECTIVE SURFACE. (MAXIMUM 40" A.F.F.)
9. THE RESTROOM DOORS MUST BE WELL FITTING AND SELF-CLOSING.
10. PROVIDE SUFFICIENT VENTILATION IN RESTROOMS BY MEANS OF A WINDOW OR MECHANICAL CEILING VENTILATION.
11. TOILET ACCESSORIES LOCATED ON OR WITHIN WALLS BE INSTALLED AND SEALED TO PROTECT STRUCTURAL ELEMENTS FROM MOISTURE.
12. FAUCET CONTROLS AND OPERATING MECHANISM (OPERABLE W/ ONE HAND) SHALL BE OF TYPE NOT REQUIRING TIGHT GRASPING, PINCHING OR TWISTING OF THE WRIST AND AN OPERATING FORCE NOT EXCEEDING 5 LBS.
13. LAVATORIES SHALL BE MOUNTED WITH THE RIM OR COUNTER SURFACE NO HIGHERTHAN 34" ABOVE THE FINISHED FLOOR & WITH A CLEARANCE OF AT LEAST 29" FROM THEFLOOR TO THE BOTTOM OF THE APRON WITH KNEE CLEARANCE UNDER THE FRONT LIPEXTENDING A MIN. OF 30" IN WIDTH & 8" MIN. DEPTH AT THE TOP. TOE CLEARANCE SHALLBE A MIN. OF 9" HIGH FROM THE FLOOR & A MIN. OF 17" DEEP FROM THE FRONT OF THELAVATORY.
14. CONTROLS FOR WATER CLOSET FLUSH VALVES SHALL BE MOUNTED ON THE WIDE SIDEOF TOILET AREAS.
15. REGARDLESS OF STALL CONFIGURATION, A 48" LONG MINIMUM CLEARANCE FLOORSPACE SHALL BE PROVIDED IN FRONT OF THE WATER CLOSET.
16. SEE FIXTURE AND STANDARD ACCESSIBILITY MOUNTING HEIGHTS DETAIL 5 / A6.1.
17. WATER CLOSET COMPARTMENTS SHALL BE EQUIPPED WITH A DOOR THAT HAS ANAUTOMATIC CLOSING DEVICE, AND SHALL HAVE A CLEAR UNOBSTRUCTED OPENINGWIDTH OF 32" WHEN LOCATED AT THE END & 34" WHEN LOCATED AT THE SIDE WITH THEDOOR POSITIONED AT AN ANGLE OF 90 DEGREES FROM ITS CLOSED POSITION.
18. THE INSIDE & OUTSIDE OF THE COMPARTMENT DOOR SHALL BE EQUIPPED W/ A LOOP ORU-SHAPED HANDLE IMMEDIATELY BELOW THE LATCH. THE LATCH SHALL FLIP OVER STYLE, SLIDING OR OTHER HARDWARE NOT REQUIRING THE USER TO GRASP OR TWIST
19. REFER TO G004 AND G005 FOR ADDITIONAL INFORMATION.

NOT USED

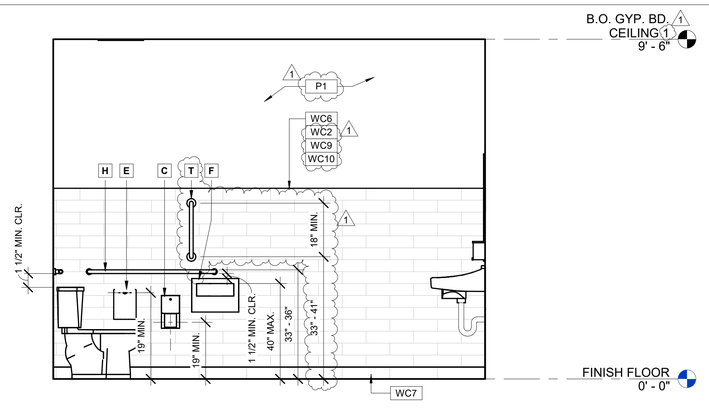

3D
EAST ELEVATION

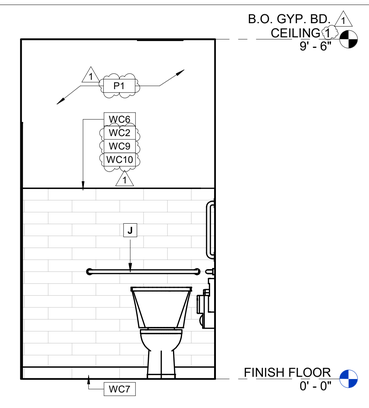

3C
NORTH ELEVATION

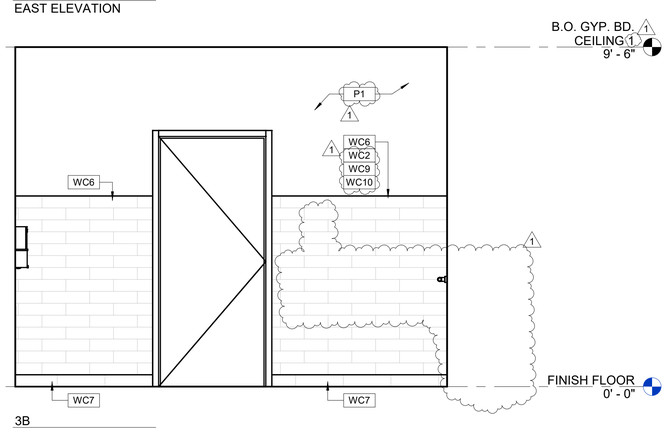

3B
WEST ELEVATION

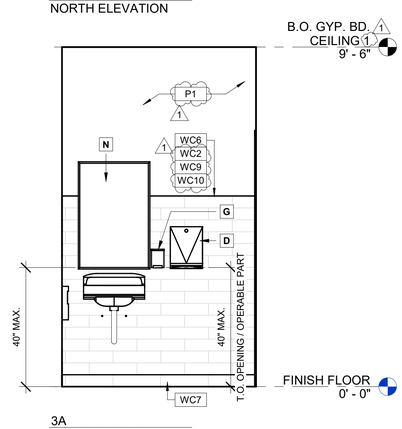

3A
SOUTH ELEVATION

INTERIOR ELEVATIONS - RESTROOM 104 Scale 1/2" = 1'-0" 2

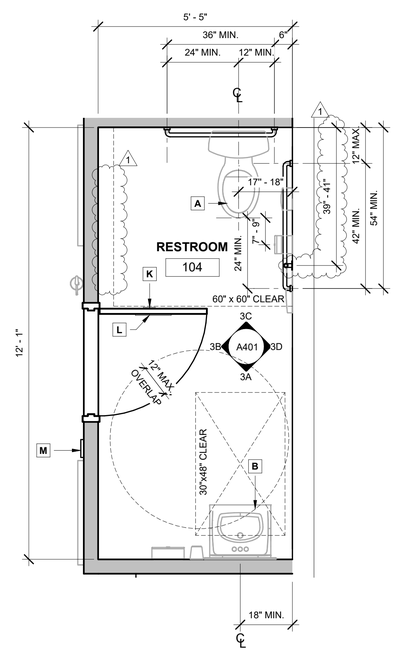

ENLARGED PLAN - RESTROOM Scale 1/2" = 1'-0" 1

RESTROOM ACCESSORIES

MARK	QTY.	ITEMS	MODEL AND DETAILS	NOTES
A	1	WATER CLOSET - (WHITE ADA TOILET)	AMERICAN STANDARD MODEL # 2467.100.20, FLUSHRATE 1.1 GPF	1, 2
B	1	WALL MOUNTED LAVATORY	AMERICAN STANDARD LUCERNE WALL MOUNTED SINK MODEL #O355.012	1, 2
	1	LAVATORY FAUCET	T&S BRASS MODEL #B-2711	1, 2
	1	INSULATE DRAIN AND HOT WATER PIPES		1, 2
C	1	SURFACE MOUNTED MULTI-ROLL TOILET TISSUE DISPENSER	BOBRICK MODEL #B-2888	1, 3
D	1	SURFACE MOUNTED PAPER TOWEL DISPENSER	BOBRICK MODEL #B-2620	1, 3
E	0	RECESSED SANITARY NAPKIN DISPOSAL	BOBRICK MODEL #B-4353 CONTURA SERIES(SATIN FINISH)	1, 2
	1	SURFACE-MOUNTED SANITARY NAPKIN DISPOSAL	BOBRICK MODEL #B-270 CONTURA SERIES (SATIN FINISH)	1, 2
F	1	SURFACE MOUNTED SEAT-COVER DISPENSER	BOBRICK MODEL #B-221 CLASSICS SERIES (SATIN FINISH)	1, 3
G	1	SURFACE MOUNTED SOAP DISPENSER	BOBRICK B-4112	1, 3
H	1	3'-6" GRAB BAR	BOBRICK MODEL #B-6806x42" (SATIN FINISH), SEE DETAILS 4, 5, 12/G005	1, 2
J	1	3'-0" GRAB BAR	BOBRICK MODEL #B-6806x36" (SATIN FINISH), SEE DETAILS 4, 5, 12/G005	1, 2
K	1	DOUBLE ROBE HOOK	BOBRICK MODEL #B-6727 (SATIN FINISH)	1, 2
L	1	DOOR MOUNTED SIGNAGE	SEE DETAILS 2, 6/G005	1, 2
M	1	DOOR STRIKE SIDE MOUNTED ACCESSIBLE SIGNAGE	SEE DETAILS 2, 6/G005	1, 2
N	1	MIRROR	BOBRICK MODEL #B-165-2436	1, 2
P 1	0	BABY CHANGING STATION	CONTINENTAL COMMERCIAL PRODUCTS MODEL #8252-H	1, 2
S	1	SIGNAGE	SIGNAGE - CREW MUST WASH HANDS	1, 2
T	1	1'-6" GRAB BAR	BOBRICK MODEL #B-6806x18" (SATIN FINISH), SEE DETAILS 4, 5/G005	1, 2

NOTES:
1. REFER TO SHEET A801 FOR FINISH PLAN AND SCHEDULE.
2. GC PROVIDED AND GC INSTALLED
3. FRANCHISEE PROVIDED AND GC INSTALLED

1

KD
Kinetic Design
20381 Lake Forest Dr. Suite B16
Lake Forest, CA. 92630
Main. 951.710.6334 Web. kineticdesign.build
Email. info@kineticdesign.build

STATE OF MISSOURI
JOHN C SCHNEIDER
NUMBER A-2012010034
ARCHITECT

STAMP DATE: 09/22/2021

NOT FOR CONSTRUCTION

THIS DRAWING IS PROVIDED FOR INFORMATIONAL PURPOSES ONLY. APPROVAL FROM THE ARCHITECT AND GOVERNING JURISDICTIONS MUST BE ATTAINED PRIOR TO THE ISSUANCE OF CONSTRUCTION DOCUMENTS. THE ARCHITECT AND HIS CONSULTANTS ASSUME NO RESPONSIBILITY FOR CONSTRUCTION BIDS OR CONSTRUCTION PERFORMED FROM THESE DRAWINGS.

REVISIONS

No.	DATE	DESCRIPTION
1	09-22-21	PCC #1, CLIENT AND LANDLORD REVISIONS

CLIENT INFORMATION

nektar JUICE BAR.

PROJECT NAME
NEKTER - LEE'S SUMMIT, MO
940 NW PRYOR ROAD, UNIT: G,
LEE'S SUMMIT, MISSOURI 64081

SHEET NAME
ENLARGED RESTROOM PLAN & ELEVATIONS

DRAWN
CHECKED
DATE 09/22/21
SCALE As indicated
PROJECT NUMBER
SHEET
A401

THESE DRAWINGS AND THE INFORMATION CONTAINED ON THEM ARE THE SOLE PROPERTY OF KINETIC DESIGN. ANY USE OF THESE DOCUMENTS OR THE INFORMATION CONTAINED HEREIN, CAN ONLY BE USED WITH WRITTEN PERMISSION FROM KINETIC DESIGN. KINETIC DESIGN ASSUMES NO LIABILITY FOR THESE DRAWINGS OR INFORMATION CONTAINED HEREIN.

9/22/2021 7:03:02 PM C:\Users\arobles\Documents\Nekter Lee Summit MO - ARCH_Central-R21_arobles.kineticdesign.rvt

GRAPHIC KEY AND DOOR SCHEDULE

NO.	ROOM NAME	DOOR PANEL SIZE	DOOR PANEL THK	DOOR PANEL TYPE	DOOR PANEL MAT'L	DOOR PANEL FINISH SET	HDW.	FRAME TYPE	FRAME MAT'L	FRAME FINISH	FRAME HEAD	FRAME JAMB	REMARKS
103	BACK OF HOUSE	(2) 1'-6" x 7'-0"	1-3/4"	SD2	ALUM	ALUM	2	F1	-		2/A501	3/A501	ELIASON DUAL LEAF DOOR; MAINTAIN 36" CLEAR OPENING AFTER DOORS & HINGES HAVE BEEN INSTALLED.
104	GENDER-NEUTRAL TOILET ROOM	(1) 3-0" x 7'-0"	1-3/4"	D1	SOLID CORE	PAINT P1	1	F1	HOLLOW METAL	PAINT P1	4/A501	5/A501	JAMB MUST BE PLUMB AND SQUARE. HOLLOW METAL JAMBS SHOULD BE REINFORCED AT HINGE LOCATIONS. MAINTAIN 36" CLEAR OPENING AFTER DOORS & HINGES HAVE BEEN INSTALLED.

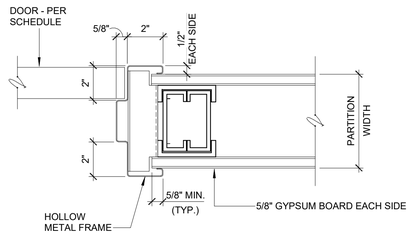

INTERIOR DOOR JAMB — Scale. 3" = 1'-0" — 5

NOT USED — Scale

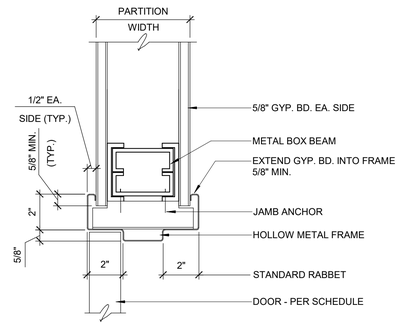

INTERIOR DOOR HEAD — Scale. 3" = 1'-0" — 4

NOT USED — Scale

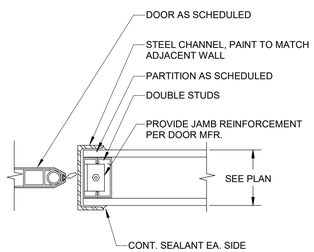

DBL ACTING DOOR FRAME JAMB — Scale. 1/2" = 1'-0" — 3

NOT USED — Scale

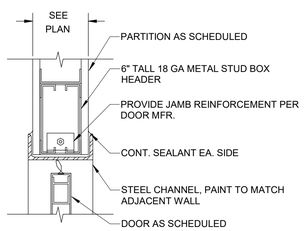

DBL ACTING DOOR FRAME HEAD — Scale. 1/2" = 1'-0" — 2

NOT USED — Scale

DOOR AND HARDWARE NOTES

1. G.C. TO VERIFY THAT EXISTING DOORS TO REMAIN ARE IN GOOD WORKING CONDITION.
2. ALL EXISTING DOORS TO REMAIN SHALL KEEP THE EXISTING HARDWARE U.N.O. OR FOUND TO NOT FUNCTION PROPERLY. G.C. TOCLEAN AND REPAIR HARDWARE TO AS-NEW CONDITION.
3. NEW BEST LOCK LEVER TYPE HARDWARE, FINISH TO MATCH EXISTING. G.C. TO VERIFY IN FIELD.
4. EXIT DOORS SHALL BE OPERABLE FROM THE INSIDE WITHOUT THE USE OF A KEY OR SPECIAL KNOWLEDGE OR EFFORT.
5. G.C. TO PROVIDE SIGNAGE ON PRIMARY EGRESS DOORS STATING "THIS DOOR TO REMAIN UNLOCKED WHEN THIS SPACE IS OCCUPIED." ALL FINISH HARDWARE SHALL COMPLY WITH ALL GOVERNING CODES AND ACCESSIBILITY CODES.
6. ALL DOOR EDGES SHALL BE PRIMED AND PAINTED. VERIFY COLORWITH INTERIOR ELEVATIONS.
7. G.C. SHALL PROVIDE A FLOOR MOUNTED DOOR STOP FOR DOORS THAT SWING AGAINST THE WALL.
8. ALL DOOR SILENCERS SHALL BE INSTALLED AFTER DOOR AND FRAME HAVE RECEIVED FINAL PAINTED.
9. INSTALL CAULKING AROUND DOOR FRAME JAMBS, HEAD AND AT BOTTOM OF FRAME.
10. DOOR OPENING FORCE: FIRE DOORS SHALL HAVE A MINIMUM OPENING FORCE ALLOWABLE BY THE APPROPRIATE ADMINISTRATIVE AUTHORITY. THE MAXIMUM FORCE FOR PUSHING OR PULLING OPEN,EXTERIOR OR INTERIOR HINGED DOORS WITH CLOSERS AND SLIDING OR FOLDING DOORS, SHALL NOT EXCEED FIVE POUNDS (22.2 N) MAXIMUM.
12. OVERHEAD AUTOMATIC SWITCH AIR CURTAINS MUST BE PROVIDED AT ALL DELIVERY DOORS. THE AIR CURTAIN WILL PRODUCE AN AIR NFLOW (8) EIGHT INCHES THICK AT THE DISCHARGE OPENING AND WITH AN AIR VELOCITY OF NOT LESS THAN 1600 FPM (FEET PER MINUTE) ACROSS THE ENTIRE OPENING MEASURED AT THREE (3) FEET BELOW THE AIR CURTAIN.
13. HANDLES, PULLS, LATCHES, LOCKS, AND OTHER OPERABLE PARTS ON DOORS AND GATES THAT ARE IN A PATH OF TRAVEL SHALL BE OPERABLE WITH ONE HAND AND SHALL NOT REQUIRE TIGHT GRASPING, PINCHING OR TWISTING OF THE WRIST. (11B-309.4).OPERABLE PARTS OF SUCH HARDWARE SHALL BE 34" MINIMUM AND 44" MAXIMUM ABOVE THE FINISH FLOOR OR GROUND (11B-404.2.7)

HARDWARE SETS
A. FURNISH THE FOLLOWING HARDWARE SETS WITH THE SPECIFIED ITEMS.

HARDWARE SET REQUIRED IS INDICATED IN THE DOOR SCHEDULE.

SET #1:
3 SETS BUTT HINGES, TOP, BOTTOM AND INTERMEDIATE
1 LOCKSET - KEYPAD LOCK W/ LEVER AND AUTO LOCK
1 RESTROOM OCCUPANCY INDICATOR
1 OVERHEAD CLOSER
1 DOOR STOP - WALL TYPE

SET #2:
2 SET PIVOT HINGE
2 SS KICKPLATE (EACH SIDE)
2 PUSH PLATE (EACH SIDE)

SET #3:
ELIASON EASY SWING HINGE SYSTEM

1. **ALL HARDWARE FINISH SHALL BE US626 SATIN ALUMINUM FINISH EXCEPT FOR STOREFRONT (MATCH EXISTING)**
2. **ALL LOCKSETS SHALL HAVE STANDARD 2 3/4" BACKSET AND 1 1/8" x 2 1/4" STRIKE PLATES. DEAD BOLTS SHALL BE 1" THROW. ALL ENTRY DOORS SHALL HAVE LOCK CYLINDERS w/ THUMB LATCH ON INSIDE. PROVIDE AND INSTALLED BY GC.**
3. **G.C. TO SUPPLY TENANT WITH A TOTAL OF (3) KEYS FOR ALL KEYED HARDWARE SETS.**
4. **SIGNS SHALL BE INSTALLED ON WALL ADJACENT TO TOILET ROOM DOOR COMPLYING WITH ALL FEDERAL STATE AND LOCAL REGULATIONS, INDICATING USE (SEX), AS WELL AS SYMBOL OF ACCESSIBILITY (REF. DTL. 13/A401.**
5. **G.C. TO PROVIDE READILY VISIBLE DURABLE SIGN POSTED ON EGRESS SIDE ON OR ADJACENT TO DOOR STATING, " THIS DOOR TO REMAIN UNLOCKED WHEN BUILDING IS OCCUPIED". SIGN SHALL BE IN LETTERS 1 INCH HIGH ON CONTRASTING BACKGROUND AT ENTRANCE.**
6. **WHERE NEW STOREFRONT GLASS DOORS ARE INSTALLED OR EXISTING STOREFRONT DOORS ARE TO BE RELOCATED, G.C. SHALL INSTALL CODE REQ'D. TEMPERED SIDELITE WITH STYLE & COLOR TO MATCH BUILDING STANDARDS.**
7. **SUBSTITUTIONS WILL BE ACCEPTED FOR ANY DOOR HARDWARE BY PRIOR OWNER APPROVAL ONLY.**
8. **ALL NEW EXT. H.M. DOORS AND FRAMES TO BE BY "AMWELD, CURRIES OR REPUBLICK (OR EQUAL). DOORS TO BE 18 GA. FACTORY PRIMED, FRAMES TO BE 16 GA. FACTORY PRIMED. PAINT INTERIOR SURFACE P-1, EXT. TO MATCH BUILDING STDS.**
9. **DOUBLE ACTING DOORS TO BE "ELIASON LWP-3" - SEE DOOR TYPE FOR VISION & KICK PLATES.**
10. **INTERIOR HOLLOW METAL DOOR FRAMES SHALL BE 18 GA. COLD ROLLED STEEL, KNOCK DOWN TYPE WITH RESILIENT BUMPERS. FRAME SHALL BE FACTORY PRIMED THEN PAINTED TO MATCH ADJACENT WALL FINISH (ALKYD). WELD TO EACH FRAME. 'C' SERIES FRAME W/ SNAP ON ALUM. CASING, BY TIMELY OR EQ.**
11. **ALL DOORS SHALL COMPLY TO ANSI A117.1.4.13.9, LISTED ED.**
12. **DOOR CLOSERS SHALL NOT REQUIRE GREATER THAN 5 LBS OR FORCE TO OPERATE. DOOR CLOSERS SHALL TAKE AT LEAST 5 SECONDS TO MOVE FROM 90° TO 12°**
13. **ALL DOOR HARDWARE IS EITHER PANIC BAR OR LEVER HARDWARE, TO MEET ALL APPLICABLE ACCESSIBILITY CODES.**
14. **OMISSIONS FROM THE SCHEDULED HARDWARE, WHEN REQUIRED FOR A COMPLETE INSTALLATION, SHALL BE INCLUDED. DIRECT ALL INQUIRIES TO THE ARCHITECT.**
15. **"EMPLOYEES MUST WASH HANDS BEFORE RETURNING TO WORK" SIGNAGE MUST BE POSTED AT ALL HANDSINKS.**
16. **EGRESS DOORS AND DOOR FRAMES TO REMAIN TO BE REFINISHED AND PAINTED TO MATCH ADJACENT WALL FINISH.**
17. **EGRESS DOORS SHALL BE READILY OPENABLE FROM THE EGRESS SIDE WITHOUT THE USE OF A KEY OR SPECIAL KNOWLEDGE OR EFFORT.**

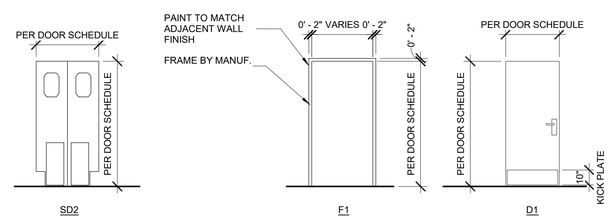

DOOR AND FRAME TYPES — Scale. 1/4" = 1'-0" — 1

KD
Kinetic Design
20381 Lake Forest Dr. Suite B16
Lake Forest, CA. 92630
Main. 951.710.6334 Web. kineticdesign.build
Email. info@kineticdesign.build

STATE OF MISSOURI
JOHN C SCHNEIDER
NUMBER A-2012010034
ARCHITECT

STAMP DATE: 09/22/2021

NOT FOR CONSTRUCTION

THIS DRAWING IS PROVIDED FOR INFORMATIONAL PURPOSES ONLY. APPROVAL FROM THE ARCHITECT AND GOVERNING JURISDICTIONS MUST BE ATTAINED PRIOR TO THE ISSUANCE OF CONSTRUCTION DOCUMENTS. THE ARCHITECT AND HIS CONSULTANTS ASSUME NO RESPONSIBILITY FOR CONSTRUCTION BIDS OR CONSTRUCTION PERFORMED FROM THESE DRAWINGS.

REVISIONS

No.	DATE	DESCRIPTION
1	09-22-21	PCC #1, CLIENT AND LANDLORD REVISIONS

CLIENT INFORMATION

nektar JUICE BAR.

PROJECT NAME
NEKTER - LEE'S SUMMIT, MO
940 NW PRYOR ROAD, UNIT: G,
LEE'S SUMMIT, MISSOURI 64081

SHEET NAME
DOOR SCHEDULES & DETAILS

DRAWN	CHECKED
DATE	09/22/21
SCALE	As indicated
PROJECT NUMBER	
SHEET	A501

THESE DRAWINGS AND THE INFORMATION CONTAINED ON THEM ARE THE SOLE PROPERTY OF KINETIC DESIGN. ANY USE OF THESE DOCUMENTS OR THE INFORMATION CONTAINED HEREIN, CAN ONLY BE USED WITH WRITTEN PERMISSION FROM KINETIC DESIGN. KINETIC DESIGN ASSUMES NO LIABILITY FOR THESE DRAWINGS OR INFORMATION CONTAINED HEREIN.

9/22/2021 2:37:18 PM C:\Users\arobles\Documents\Nekter Lee Summit MO - ARCH_Central-R21_arobles.kineticdesign.rvt

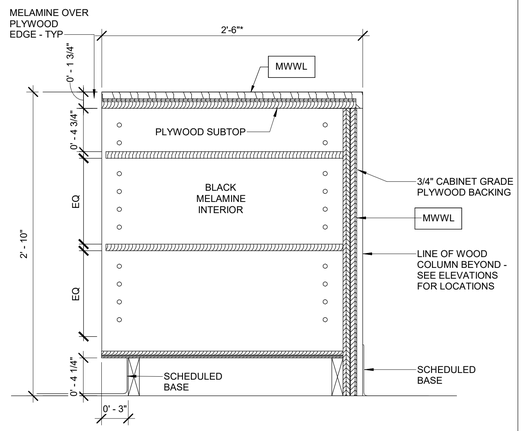

HAND OFF COUNTER MILLWORK DETAIL | Scale. 1 1/2" = 1'-0" | 8

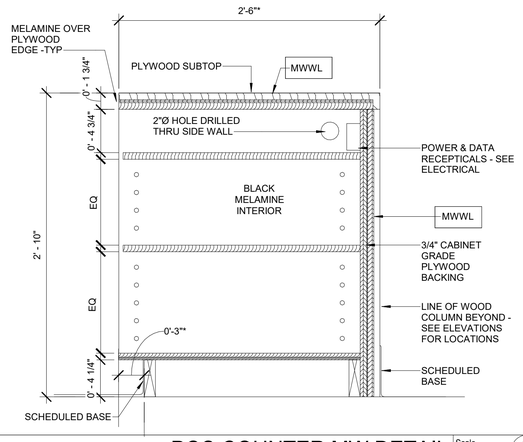

POS COUNTER MW DETAIL | Scale. 1 1/2" = 1'-0" | 7

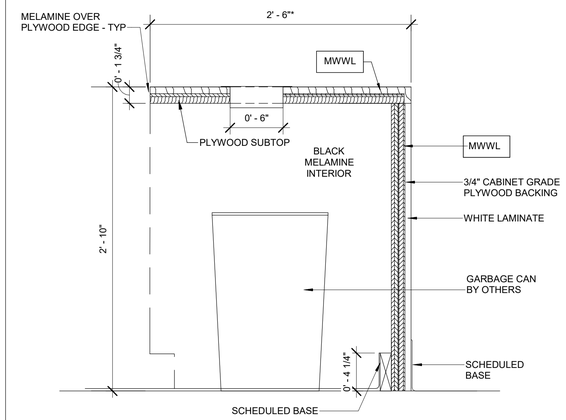

HAND OFF COUNTER MW DETAIL | Scale. 1 1/2" = 1'-0" | 6

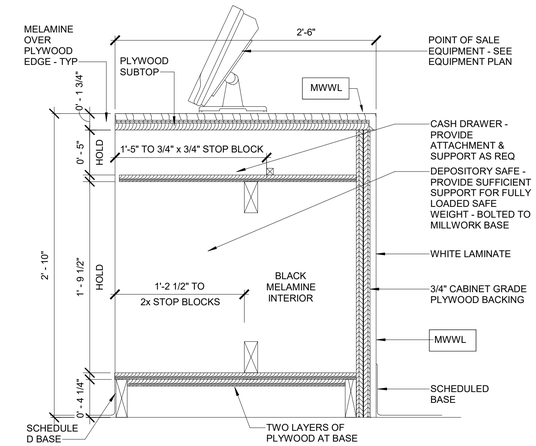

POINT OF SALE COUNTER MW DETAIL | Scale. 1 1/2" = 1'-0" | 3

NOT USED | Scale

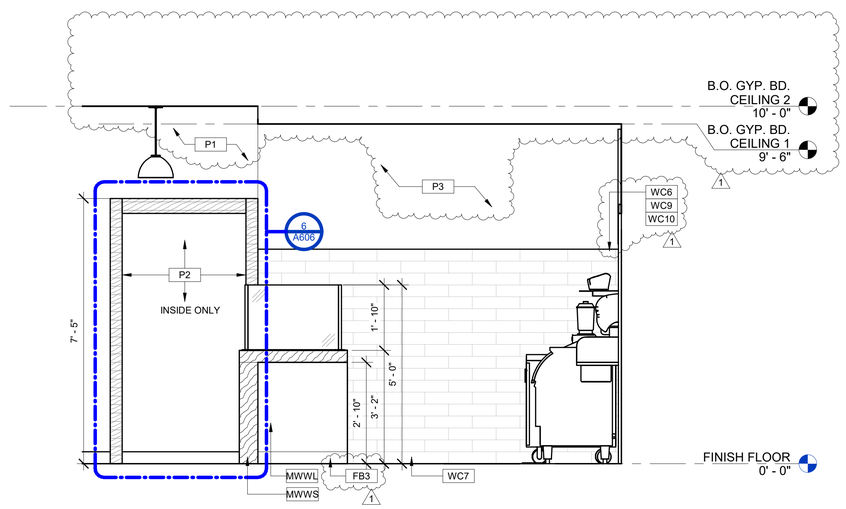

INT. ELEV. - JUICING & BLENDING COUNTER - SIDE | Scale. 1/2" = 1'-0" | 5

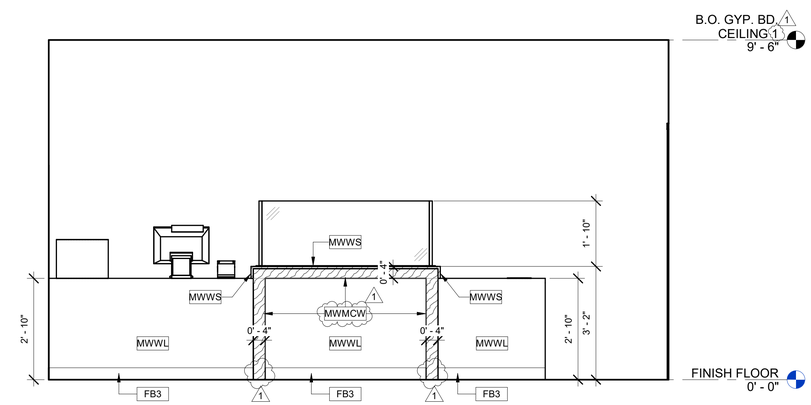

INT. ELEV. - JUICING& BLENDING COUNTER - FRONT | Scale. 1/2" = 1'-0" | 2

NOT USED | Scale

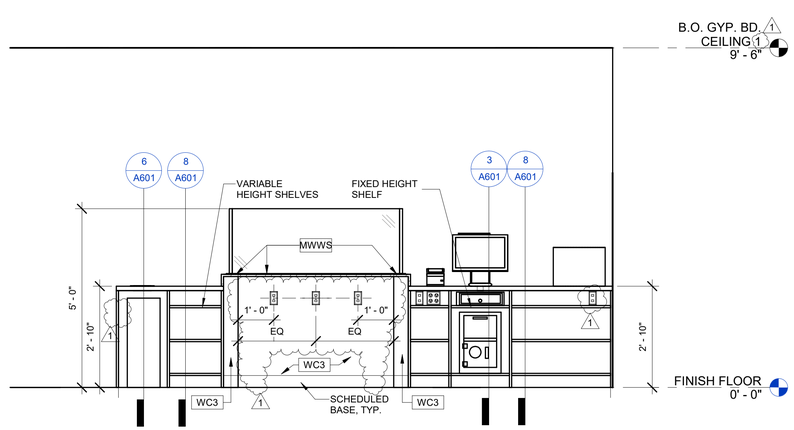

INT. ELEV. - JUICING & BLENDING COUNTER - BACK | Scale. 1/2" = 1'-0" | 4

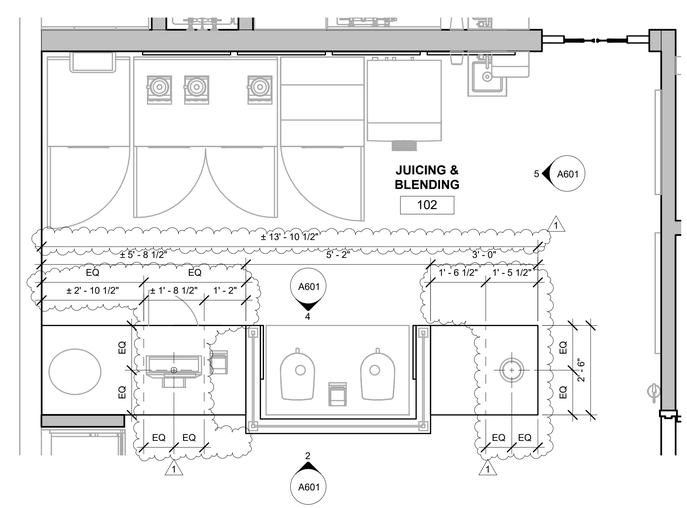

ENL. PLAN - JUICING & BLENDING | Scale. 1/2" = 1'-0" | 1

NOT USED | Scale

THESE DRAWINGS AND THE INFORMATION CONTAINED ON THEM ARE THE SOLE PROPERTY OF KINETIC DESIGN. ANY USE OF THESE DOCUMENTS OR THE INFORMATION CONTAINED HEREIN, CAN ONLY BE USED WITH WRITTEN PERMISSION FROM KINETIC DESIGN. KINETIC DESIGN ASSUMES NO LIABILITY FOR THESE DRAWINGS OR INFORMATION CONTAINED HEREIN.

KD
Kinetic Design
20381 Lake Forest Dr. Suite B16
Lake Forest, CA. 92630
Main. 951.710.6334 Web. kineticdesign.build
Email. info@kineticdesign.build

STATE OF MISSOURI
JOHN C SCHNEIDER
NUMBER A-2012010034
ARCHITECT

STAMP DATE: 09/22/2021

NOT FOR CONSTRUCTION

THIS DRAWING IS PROVIDED FOR INFORMATIONAL PURPOSES ONLY. APPROVAL FROM THE ARCHITECT AND GOVERNING JURISDICTIONS MUST BE ATTAINED PRIOR TO THE ISSUANCE OF CONSTRUCTION DOCUMENTS. THE ARCHITECT AND HIS CONSULTANTS ASSUME NO RESPONSIBILITY FOR CONSTRUCTION BIDS OR CONSTRUCTION PERFORMED FROM THESE DRAWINGS.

REVISIONS

No.	DATE	DESCRIPTION
1	09-22-21	PCC #1, CLIENT AND LANDLORD REVISIONS

CLIENT INFORMATION

nektar JUICE BAR.

PROJECT NAME
NEKTER - LEE'S SUMMIT, MO
940 NW PRYOR ROAD, UNIT: G,
LEE'S SUMMIT, MISSOURI 64081

SHEET NAME
MILLWORK PLAN, ELEVATIONS, AND DETAILS

DRAWN
CHECKED
DATE 09/22/21
SCALE As indicated
PROJECT NUMBER
SHEET A601

9/22/2021 2:37:21 PM C:\Users\arobles\Documents\Nekter Lee Summit MO - ARCH_Central-R21_arobles.kineticdesign.rvt

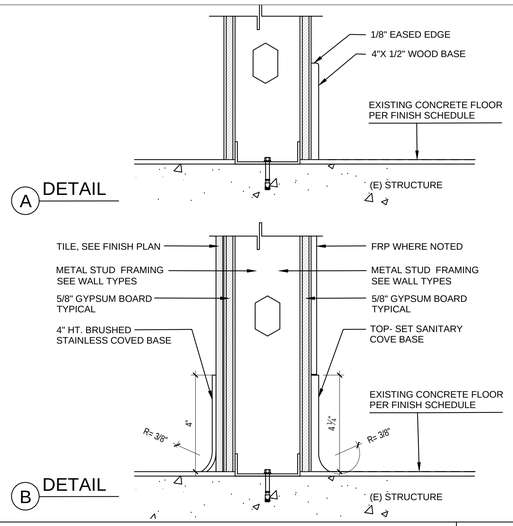

TYPICAL WALL BASE DETAILS

Scale. NTS — 08

SIZE	MAXIMUM PARTITION HEIGHT		MAXIMUM PARTITION HEIGHT	
	SPACING	HEIGHT	SPACING	HEIGHT
362 S 125 - 30	16"	15' - 6"	24"	13' - 6"
550 S 125 - 30	16"	21' - 6"	24"	18' - 11"
600 S 125 - 30	16"	22' - 11"	24"	20' - 0"

HEIGHT
13' - 6"
18' - 11"
20' - 0"

1. ALL THE METAL STUDS USED SHALL BE "ICC-ES" TYPE OR APPROVED EQUAL.
2. THE BRIDGING, BLOCKING OR END BEARING STIFFENERS SHALL BE AS REQUIRED BY THE MANUFACTURER UNLESS NOTED OTHERWISE ON THE DRAWINGS.
3. ALL THE STUDS SHALL CONFORM TO "ICC-ES EVALUATION REPORT" ESR-3064P OR APPROVED EQUAL.
4. UNLESS OTHERWISE NOTED ON THE PLANS, USE THE FOLLOWING GUIDELINE FOR STUD SIZE & SPACING FOR INTERIOR PARTITIONS.
5. TOP TRACK SIZE WILL BE 20 GA. MINUMUM FOR PARTITION, U.N.O.

METAL STUD SCHEDULE

Scale. NTS — 07

1. GALVANIZED STEEL MUST MEET THE MINIMUM REQUIREMENTS OF
   ASTM A446 GRADE D (Fy=50KSI) FOR 12 GAUGE
   ASTM A446 GRADE A (Fy=33KSI) FOR 14 & 16 GAUGE
   ASTM A446 GRADE A (Fy=33KSI) FOR 18 GAUGE
   AND LIGHTER FOR THE ITEM AND USE INTENDED
   GALVANIZED COATINGS MUST MEET THE ASTM A525 SPECIFICATIONS.
2. CARBON SHEET STEEL MUST MEET THE MINIMUM REQUIREMENTS OF
   ASTM A570 GRADE 50 KSI FOR 12 GAUGE
   ASTM A570 GRADE 50 KSI OR GRADE 33 KSI FOR 14 & 16 GAUGE AND
   GRADE 33 KSI FOR 18 GAUGE AND LIGHTER MEMBERS
   CARBON SHEET STEEL PRODUCTS MUST BE THOROUGHLY COATED WITH A RUST INHIBITIVE PAINT.
3. ALL STRUCTURAL MEMBERS SHALL BE DESIGNED IN ACCORDANCE WITH AMERICAN IRON AND STEEL INSTITUTE (AISI) "SPECIFICATION FOR THE DESIGN OF COLD-FORMED STEEL STRUCTURAL MEMBERS" 2010 EDITION WITH SUPPLEMENT 2.
4. METAL STUDS AND / OR JOISTS:
   A. FOR METAL STUD WALLS, UNLESS OTHERWISE SHOWN ON THE DRAWINGS, PROVIDE STANDARD PUNCHED STEEL MEMBERS OF THE GAUGES SHOWN ON THE DRAWINGS
   B. USE ONLY ONE TYPE THROUGHOUT THE WORK, UNLESS OTHERWISE SHOWN ON THE DRAWINGS OR SPECIFICALLY APPROVED IN ADVANCE BY THE ENGINEER AND/OR ARCHITECT.
5. ACCESSORIES: PROVIDE ALL ACCESSORIES INCLUDING, BUT NOT NECESSARILY LIMITED TO, TRACKS, CLIPS, WEB STIFFENERS, ANCHORS, FASTENING DEVICES RESILIENT CLIPS, AND OTHER ACCESSORIES REQUIRED FOR A COMPLETE AND PROPER INSTALLATION, AND AS RECOMMENDED BY THE MANUFACTURER FOR THE STEEL MEMBERS USED.
6. FASTENING OF COMPONENTS SHALL BE WITH SELF-DRILLING SCREWS OR WELDING SCREWS OR WELDS SHALL BE OF SUFFICIENT SIZE TO INSURE THE STRENGTH OF THE CONNECTION. ALL WELDS OF GALVANIZED STEEL SHALL BE TOUCHED UP WITH A ZINC RICH PAINT. ALL WELDS OF CARBON SHEET STEEL SHALL BE TOUCHED UP WITH PAINT.
7. PROVIDE A GOOD GRADE OF COMMERCIAL GROUT FOR LEVELING THE FLOOR RUNNER MEMBER OF STEEL STUD PARTITIONS AS REQUIRED.

FRAMING NOTES

Scale. NTS — 06

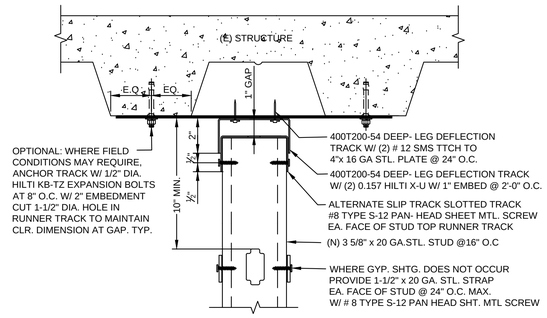

A DETAIL

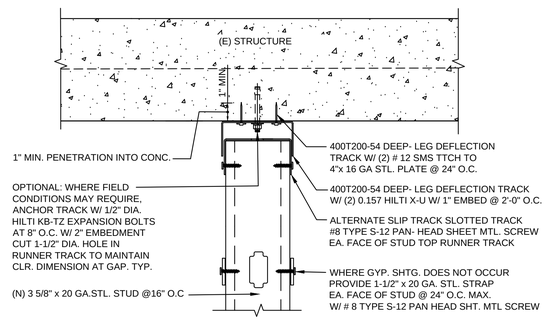

B DETAIL

TOP BRACE ANCHORAGE DETAIL

Scale. 1 1/2"=1'-0" — 05

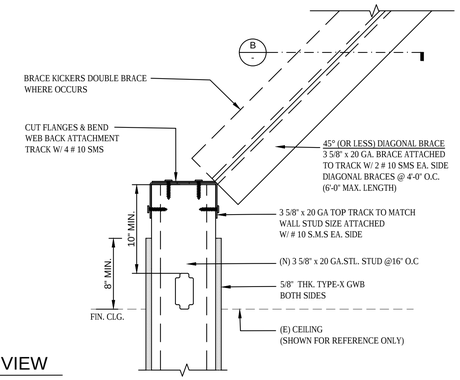

A SIDE VIEW

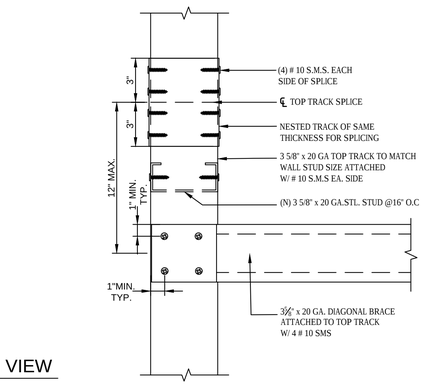

B PLAN VIEW

BOTTOM BRACE ANCHORAGE DETAILS

Scale. 1 1/2"=1'-0" — 03

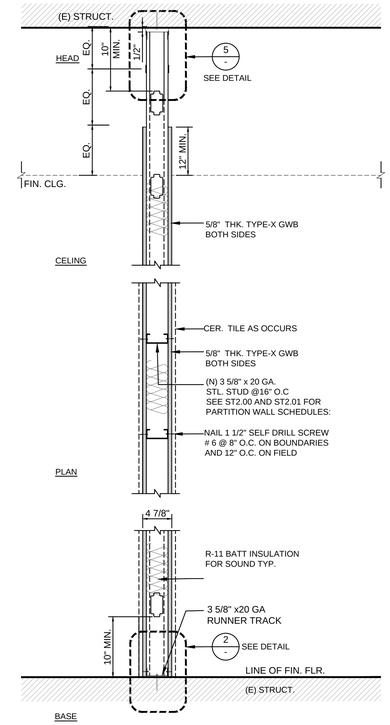

NON-BEARING INTERIOR PARTITION WALL
W1 NON-RATED FULL HEIGHT WALL
INTERIOR WALL

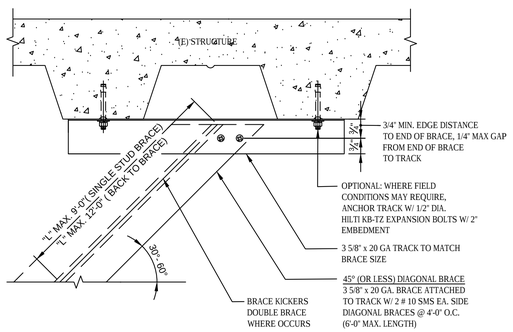

A DETAIL

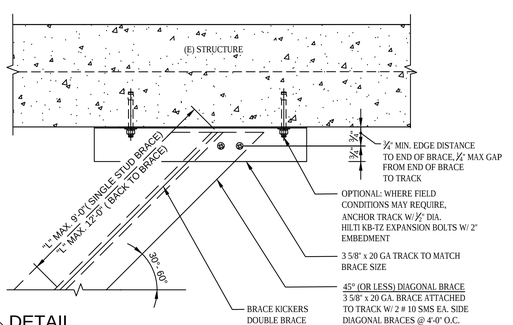

B DETAIL

TOP BRACE ANCHORAGE DETAILS

Scale. 1 1/2"=1'-0" — 04

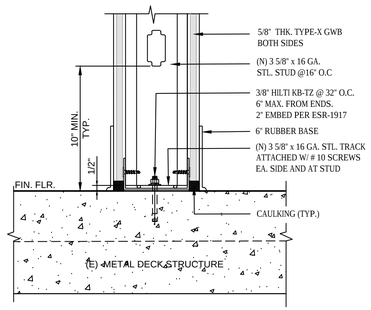

A BOTTOM TRACK ANCHORAGE

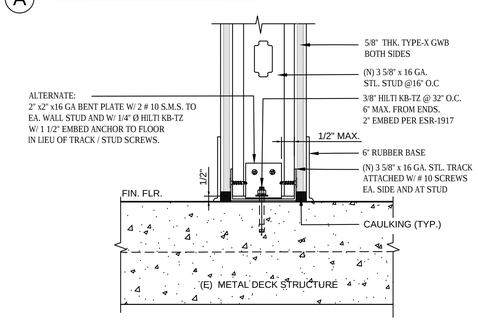

B BOTTOM TRACK ANCHORAGE W/ CABINET & EQUIP.

BOTTOM TRACK ANCHORAGE DETAILS

Scale. 1 1/2"=1'-0" — 02

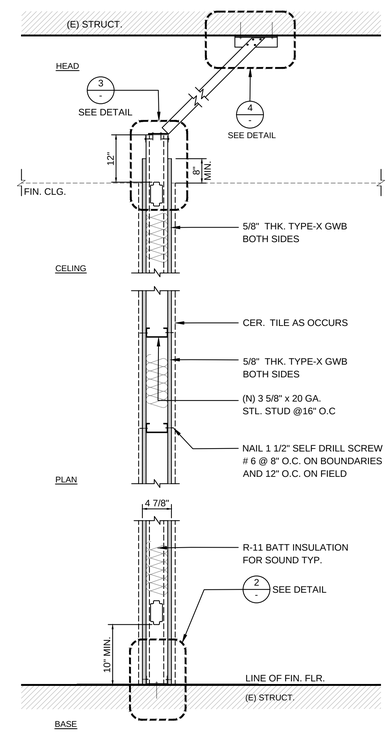

NON-BEARING INTERIOR PARTITION WALL
W2 NON-RATED PARTITION WALL
INTERIOR WALL

TYPICAL WALL SECTIONS

Scale. 1"=1'-0" — 01

THESE DRAWINGS AND THE INFORMATION CONTAINED ON THEM ARE THE SOLE PROPERTY OF KINETIC DESIGN. ANY USE OF THESE DOCUMENTS OR THE INFORMATION CONTAINED HEREIN, CAN ONLY BE USED WITH WRITTEN PERMISSION FROM KINETIC DESIGN. KINETIC DESIGN ASSUMES NO LIABILITY FOR THESE DRAWINGS OR INFORMATION CONTAINED HEREIN.

KD
Kinetic Design
20381 Lake Forest Dr. Suite B16
Lake Forest, CA. 92630
Main. 951.710.6334 Web. kineticdesign.build
Email. info@kineticdesign.build

STATE OF MISSOURI
JOHN C SCHNEIDER
NUMBER A-2012010034
ARCHITECT
STAMP DATE: 09/22/2021

NOT FOR CONSTRUCTION

THIS DRAWING IS PROVIDED FOR INFORMATIONAL PURPOSES ONLY. APPROVAL FROM THE ARCHITECT AND GOVERNING JURISDICTIONS MUST BE ATTAINED PRIOR TO THE ISSUANCE OF CONSTRUCTION DOCUMENTS. THE ARCHITECT AND HIS CONSULTANTS ASSUME NO RESPONSIBILITY FOR CONSTRUCTION BIDS OR CONSTRUCTION PERFORMED FROM THESE DRAWINGS.

REVISIONS

No.	DATE	DESCRIPTION
1	09-22-21	PCC #1, CLIENT AND LANDLORD REVISIONS

CLIENT INFORMATION

nektar JUICE BAR.

PROJECT NAME
NEKTER - LEE'S SUMMIT, MO
940 NW PRYOR ROAD, UNIT: G,
LEE'S SUMMIT, MISSOURI 64081

SHEET NAME
WALL ASSEMBLY DETAILS

DRAWN
CHECKED
DATE 09/22/21
SCALE As indicated
PROJECT NUMBER
SHEET
A602

7/30/2021 6:36:13 PM C:\Users\arobles\Documents\Nekter Lee Summit MO - ARCH_Central-R21_arobles.kineticdesign.rvt

NOT USED Scale

NOT USED Scale

FRAMING NOTES

1. GALVANIZED STEEL MUST MEET THE MINIMUM REQUIREMENTS OF ASTM A446 GRADE D (Fy=50KSI) FOR 12 GAUGE ASTM A446 GRADE A (Fy=33KSI) FOR 14 & 16 GAUGE ASTM A446 GRADE A (Fy=33KSI) FOR 18 GAUGE AND LIGHTER FOR THE ITEM AND USE INTENDED GALVANIZED COATINGS MUST MEET THE ASTM A525 SPECIFICATIONS.

2. CARBON SHEET STEEL MUST MEET THE MINIMUM REQUIREMENTS OF ASTM A570 GRADE 50 KSI FOR 12 GAUGE ASTM A570 GRADE 50 KSI OR GRADE 33 KSI FOR 14 & 16 GAUGE AND GRADE 33 KSI FOR 14 & 16 GAUGE AND GRADE 33 KSI FOR 18 GAUGE AND LIGHTER MEMBERS CARBON SHEET STEEL PRODUCTS MUST BE THOROUGHLY COATED WITH A RUST INHIBITIVE PAINT.

3. ALL STRUCTURAL MEMBERS SHALL BE DESIGNED IN ACCORDANCE WITH AMERICAN IRON AND STEEL INSTITUTE (AISI) "SPECIFICATION FOR THE DESIGN OF COLD-FORMED STEEL STRUCTURAL MEMBERS" 2010 EDITION WITH SUPPLEMENT

4. METAL STUDS AND / OR JOISTS: FOR METAL STUD WALLS, UNLESS OTHERWISE SHOWN ON THE DRAWINGS, PROVIDE STANDARD PUNCHED STEEL MEMBERS OF THE GAUGES SHOWN ON THE DRAWINGS. USE ONLY ONE TYPE THROUGHOUT THE WORK, UNLESS OTHERWISE SHOWN ON THE DRAWINGS OR SPECIFICALLY APPROVED IN ADVANCE BY THE ENGINEER AND/OR ARCHITECT.

5. ACCESSORIES: PROVIDE ALL ACCESSORIES INCLUDING, BUT NOT NECESSARILY LIMITED TO, TRACKS, CLIPS, WEB STIFFENERS, ANCHORS, FASTENING DEVICES RESILIENT CLIPS, AND OTHER ACCESSORIES REQUIRED FOR A COMPLETE AND PROPER INSTALLATION, AND AS RECOMMENDED BY THE MANUFACTURER FOR THE STEEL MEMBERS USED.

6. FASTENING OF COMPONENTS SHALL BE WITH SELF-DRILLING SCREWS OR WELDING SCREWS OR WELDS SHALL BE OF SUFFICIENT SIZE TO INSURE THE STRENGTH OF THE CONNECTION. ALL WELDS OF GALVANIZED STEEL SHALL BE TOUCHED UP WITH A ZINC RICH PAINT. ALL WELDS OF CARBON SHEET STEEL SHALL BE TOUCHED UP WITH PAINT.

7. PROVIDE A GOOD GRADE OF COMMERCIAL GROUT FOR LEVELING THE FLOOR RUNNER MEMBER OF STEEL STUD PARTITIONS AS REQUIRED.

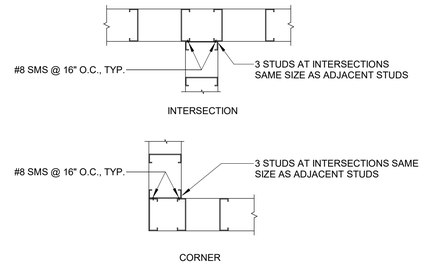

TYP. STUD FRAMING Scale. 1 1/2" = 1'-0" 4

NOT USED Scale

NOT USED Scale

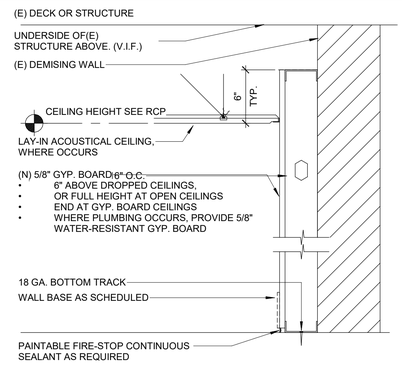

WALL FURRING Scale. 1 1/2" = 1'-0" 7

FRAMING NOTES

1. WALLS: 3 5/8" - C STUDS (#362S125-30) 20 GA. @ 16" O.C. TYPICAL

2. CEILING: 3 5/8" C STUDS (#362S125-30) 20 GA. @ 16" O.C. TYPICAL

3. ALL "C" STUDS INCLUDE A STIFFENED 1 5/8" FLANGE (EXCEPTION: 2 1/2" STUDS IS 1 1/4" FLANGE)

4. STEEL STUDS, TRACKS, HAT CHANNELS, AND JOISTS SHALL COMPLY WITH ER-4943P.

METAL STUD AND TRACK PROPERTIES
S = STUD T = TRACK

SSMA DESIGNATION (ICBO ER-4943P)	DEPTH	GAGE	FLANGE WIDTH	Ix (IN4)	Sx (IN4)
362S125-30	3 5/8"	20	1 1/4"	.381	.210
600T125-54	6"	16	1 1/4"	2.344	.756
362T125-30	3 5/8"	20	1 1/4"	.395	.210
362S137-54	3 5/8"	16	1 1/4"	.756	.417
362T12554	3 5/8"	16	1 1/4"	.723	.378

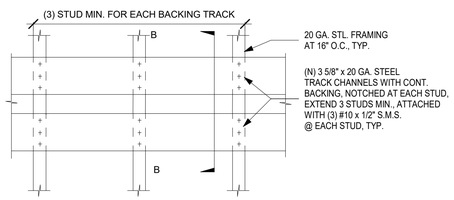

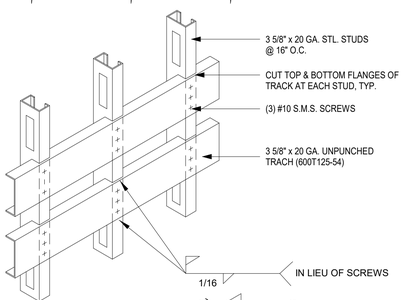

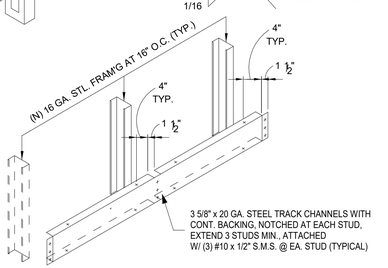

BACKING DETAIL Scale. 1/2" = 1'-0" 1

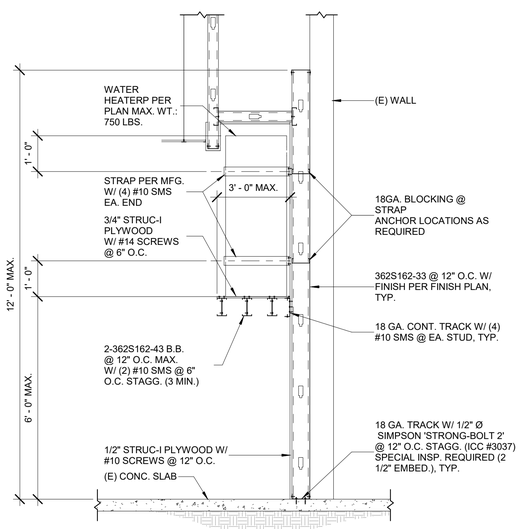

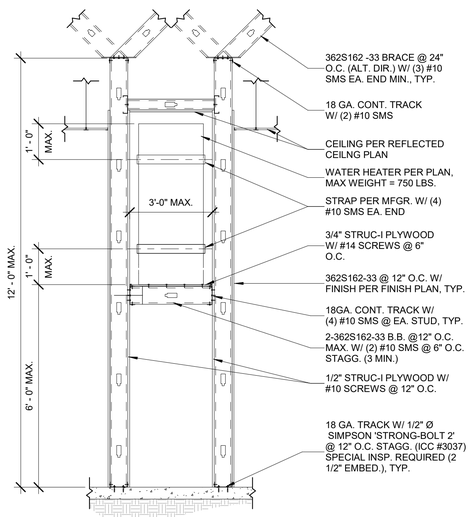

WATER HEATER PLATFORM Scale. 1/2" = 1'-0" 9

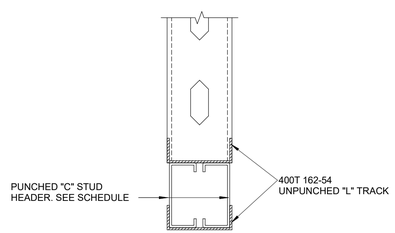

OPENING WIDTH	HEADER SIZE
UP TO 6'-0"	550 S 162 - 43
6'-1" - 8'-0"	600 S 162 - 43
8'-1" - 10'-0"	600 S 162 - 54

BOX HEADER Scale. 3" = 1'-0" 6

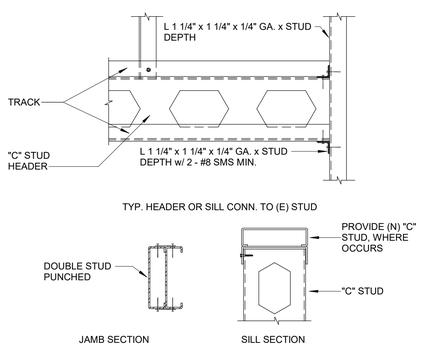

STUD CONNECTION Scale. 3" = 1'-0" 5

THESE DRAWINGS AND THE INFORMATION CONTAINED ON THEM ARE THE SOLE PROPERTY OF KINETIC DESIGN. ANY USE OF THESE DOCUMENTS OR THE INFORMATION CONTAINED HEREIN, CAN ONLY BE USED WITH WRITTEN PERMISSION FROM KINETIC DESIGN. KINETIC DESIGN ASSUMES NO LIABILITY FOR THESE DRAWINGS OR INFORMATION CONTAINED HEREIN.

KD
Kinetic Design
20381 Lake Forest Dr. Suite B16
Lake Forest, CA. 92630
Main. 951.710.6334 Web. kineticdesign.build
Email. info@kineticdesign.build

STATE OF MISSOURI
JOHN C SCHNEIDER
NUMBER A-2012010034
ARCHITECT

STAMP DATE: 09/22/2021

NOT FOR CONSTRUCTION

THIS DRAWING IS PROVIDED FOR INFORMATIONAL PURPOSES ONLY. APPROVAL FROM THE ARCHITECT AND GOVERNING JURISDICTIONS MUST BE ATTAINED PRIOR TO THE ISSUANCE OF CONSTRUCTION DOCUMENTS. THE ARCHITECT AND HIS CONSULTANTS ASSUME NO RESPONSIBILITY FOR CONSTRUCTION BIDS OR CONSTRUCTION PERFORMED FROM THESE DRAWINGS.

REVISIONS

No.	DATE	DESCRIPTION
1	09-22-21	PCC #1, CLIENT AND LANDLORD REVISIONS

CLIENT INFORMATION

nektar JUICE BAR.

PROJECT NAME
NEKTER - LEE'S SUMMIT, MO
940 NW PRYOR ROAD, UNIT: G, LEE'S SUMMIT, MISSOURI 64081

SHEET NAME
WALL AND MISCELLANEOUS DETAILS

DRAWN
CHECKED
DATE 09/22/21
SCALE As indicated
PROJECT NUMBER
SHEET
A603

9/22/2021 2:37:24 PM C:\Users\arobles\Documents\Nekter Lee Summit MO - ARCH_Central-R21_arobles.kineticdesign.rvt

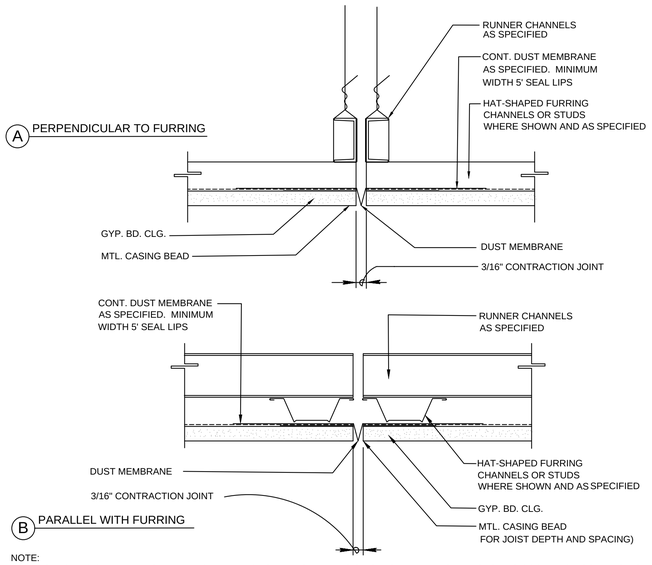

NOTE:
CONTROL JOINTS SHALL BE INSTALLED TO DIVIDE LONG NARROW AREAS OF GYPSUM WALLBOARD, SUCH AS OCCURE ON CORRIDOR CEILINGS, INTO LENGTHS OF NOT MORE THAN 40 FEET AND SHALL BE INSTALLED AT EXPANSION OR CONTRACTION JOINTS IN THE STRUCTURAL FRAMEWORK OVER WHICH GYPSUM BOARD IS REQUIRED. CONTROL JOINTS FOR WALLS SHALL BE INSTALLED AS DETAILED ABOVE WITH DUST MEMBRANE AND METAL CASING BEADS APPLIED TO TWO WALL STUDS OR FURRING MEMBERS SPACED 3/4" APART. ALL CEILING AND WALL JOINTS SHALL BE INSTALLED WHERE SHOWN ON THE ARCHITECTURAL WALL ELEVATIONS AND THE FLOOR AND REFLECTED CEILING PLANS.

CEILING CONTROL JOINT — Scale. NTS — 11

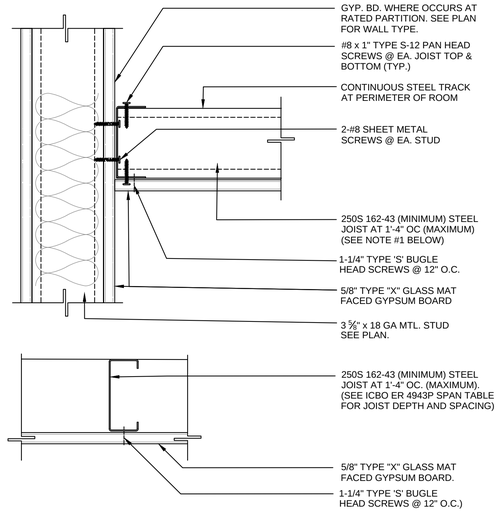

NOTE #1:
ALL JOIST SHALL BE "S"-SECTIONS MINIMUM 33KSI YIELD STRNGTH STEEL. DEFLECTION LIMIT IS = L/360. SPAN LIMIT SHALL BE AS DEFINED IN THE STEEL STUD MANUFACTURERS ASSOCIATION PUBLICATION ICBO ER-4943P.

MAXIMUM CEILING JOIST SPAN
250S162-43 @ 12" OC = 10'-0"
250S162-43 @ 1'-4" OC = 9'-1"
400S162-43 @ 12" OC = 11'-11"
400S162-43 @ 1'-4" OC = 11'-1"
600S162-43 @ 12" OC = 13'-4"
600S162-43 @ 1'-4" OC = 12'-4"

METAL JOIST GYP. BD. CEILING — Scale. NTS — 07

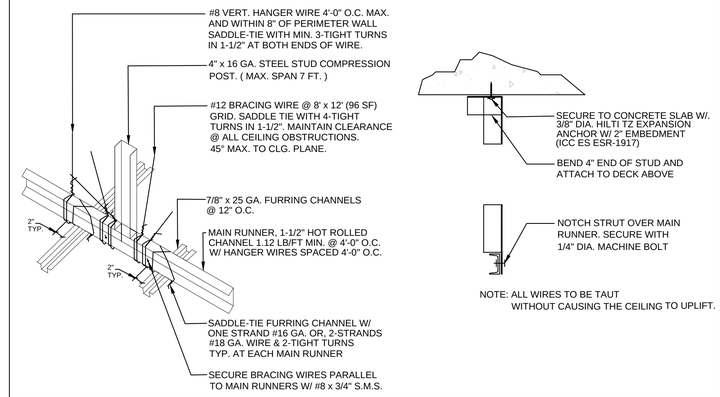

COMPRESSION STRUT AT GYP. BD. CEILING — Scale. NTS — 04

1. USE "ICC-ES EVALUATION REPORT" ESR-3064P OR APPROVED EQUAL.
2. USE 600S125-43 @ 16" O.C. UP TO 16'-0" MAXIMUM SPAN WHERE CEILING SUPPORTED TOILET PARTITIONS OCCUR.
3. STUD TRACKS SHALL BE UNPUNCHED STUDS OF SAME GAUGE AS STUD UNLESS NOTED OTHERWISE
4. ACOUSTIC CEILING TIES (SEE FINISH SCHEDULE) WITH 1 - #8 SCREWS AT EACH JOIST.

	CEILING TIES (BRACING) SPACING	S I Z E	MAXIMUM SPAN		MAXIMUM SPAN	
			SPACING	SPAN	SPACING	SPAN
CEILING GYPSUM BOARD	4' - 0"	362 S 125 - 30	16"	8' - 0"	24"	7' - 0"
	3' - 6"	550 S 125 - 30	16"	11' - 0"	24"	9' - 0"
	3' - 6"	600 S 125 - 30	16"	16' - 0"	24"	13' - 0"

METAL JOIST SCHEDULE — Scale. NTS — 03

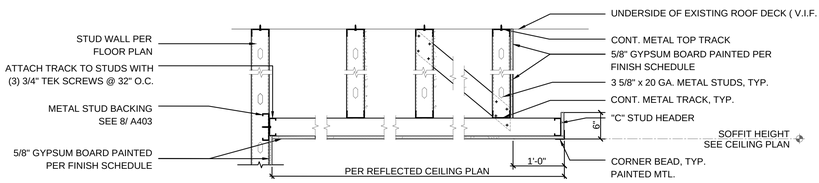

GYP. BD. SOFFIT — Scale. NTS — 10

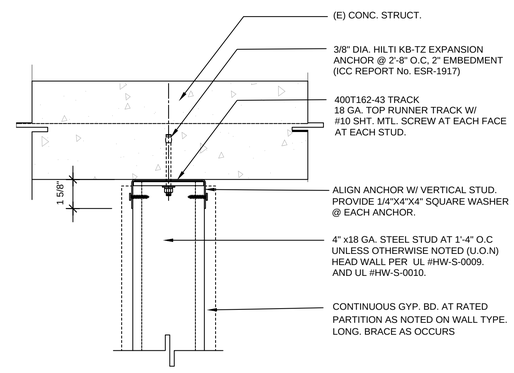

SUSPENDED STUD ATTACHMENT — Scale. NTS — 06

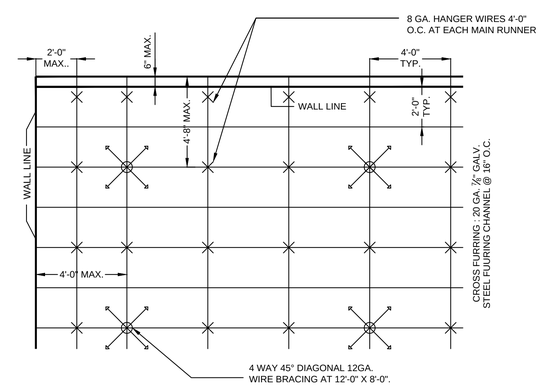

NOTES :
(1) BRACING WIRES AND COMP. STRUT SHALL OCCUR AT EVERY 96S.F. MAXIMUM IN ROOM OVER 96 SQ. FT.
(2) FOR TYPICAL CEILING SECTION, SEE DETAIL 5/-

DIAGRAMMATIC CEILING PLAN — Scale. NTS — 02

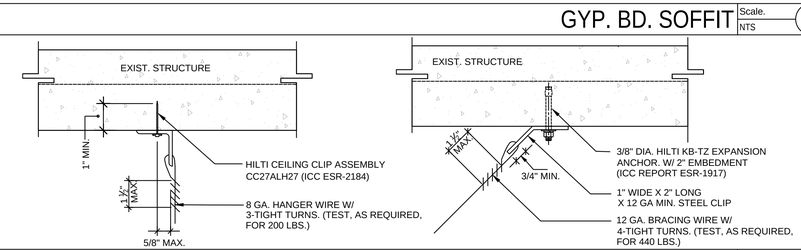

HANGER WIRE ATTACHMENT — Scale. NTS — 09

GYP.BD. CEILING AT WALL — Scale. NTS — 05

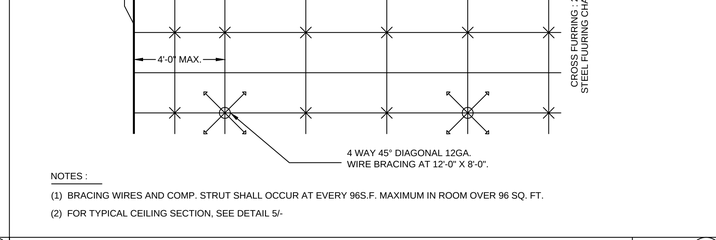

SUSPENDED GYP. BD. CEILING — Scale. NTS — 01

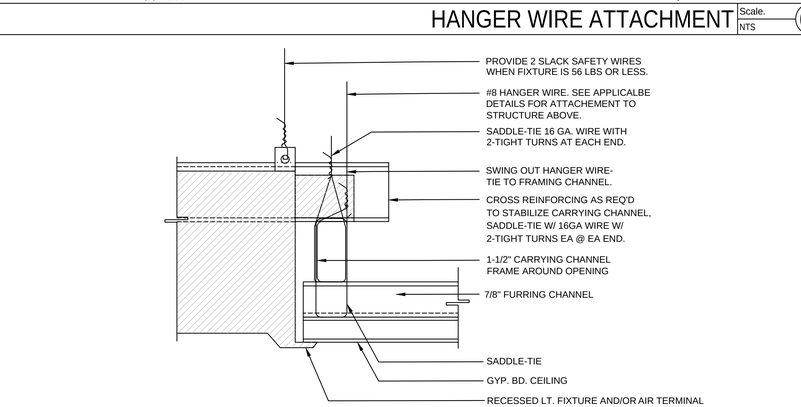

NOTE 1: AIR TERMINALS OR LIGHT FIXTURES TO BE SUPPORTED DIRECTLY TO MAIN RUNNERS AS SHOWN
NOTE 2: PROVIDE 4 SAFETY WIRES WHEN FIXTURE IS OVER 56 LBS

LIGHT FIXTURE / TERMINAL SUPPORT — Scale. NTS — 08

THESE DRAWINGS AND THE INFORMATION CONTAINED ON THEM ARE THE SOLE PROPERTY OF KINETIC DESIGN. ANY USE OF THESE DOCUMENTS OR THE INFORMATION CONTAINED HEREIN, CAN ONLY BE USED WITH WRITTEN PERMISSION FROM KINETIC DESIGN. KINETIC DESIGN ASSUMES NO LIABILITY FOR THESE DRAWINGS OR INFORMATION CONTAINED HEREIN.

KD
Kinetic Design
20381 Lake Forest Dr. Suite B16
Lake Forest, CA. 92630
Main. 951.710.6334 Web. kineticdesign.build
Email. info@kineticdesign.build

STATE OF MISSOURI — JOHN C SCHNEIDER — NUMBER A-2012010034 — ARCHITECT

STAMP DATE: 09/22/2021

NOT FOR CONSTRUCTION

THIS DRAWING IS PROVIDED FOR INFORMATIONAL PURPOSES ONLY. APPROVAL FROM THE ARCHITECT AND GOVERNING JURISDICTIONS MUST BE ATTAINED PRIOR TO THE ISSUANCE OF CONSTRUCTION DOCUMENTS. THE ARCHITECT AND HIS CONSULTANTS ASSUME NO RESPONSIBILITY FOR CONSTRUCTION BIDS OR CONSTRUCTION PERFORMED FROM THESE DRAWINGS.

REVISIONS

No.	DATE	DESCRIPTION
1	09-22-21	PCC #1, CLIENT AND LANDLORD REVISIONS

CLIENT INFORMATION

nektar JUICE BAR.

PROJECT NAME
NEKTER - LEE'S SUMMIT, MO
940 NW PRYOR ROAD, UNIT: G, LEE'S SUMMIT, MISSOURI 64081

SHEET NAME
LAY-IN CEILING DETAILS

DRAWN	CHECKED
DATE	09/22/21
SCALE	As indicated
PROJECT NUMBER	
SHEET	A604

C:\Users\arobles\Documents\Nekter Lee Summit MO - ARCH_Central-R21_arobles.kineticdesign.rvt
7/30/2021 6:36:16 PM

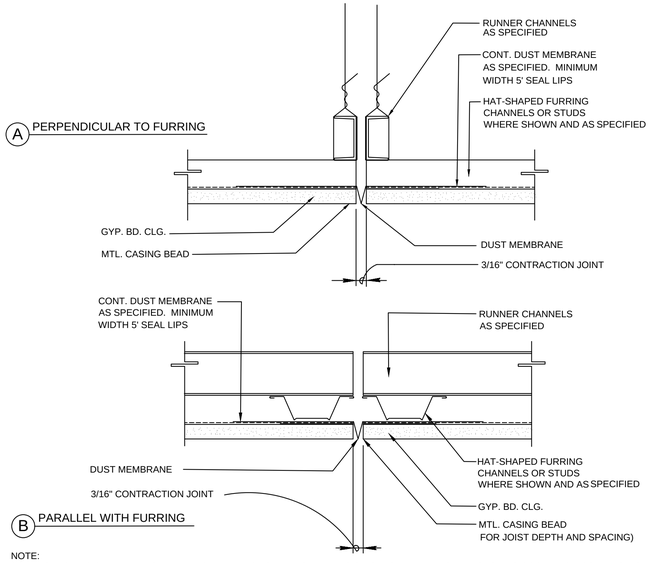

NOTE:
CONTROL JOINTS SHALL BE INSTALLED TO DIVIDE LONG NARROW AREAS OF GYPSUM WALLBOARD, SUCH AS OCCURE ON CORRIDOR CEILINGS, INTO LENGTHS OF NOT MORE THAN 40 FEET AND SHALL BE INSTALLED AT EXPANSION OR CONTRACTION JOINTS IN THE STRUCTURAL FRAMEWORK OVER WHICH GYPSUM BOARD IS REQUIRED. CONTROL JOINTS FOR WALLS SHALL BE INSTALLED AS DETAILED ABOVE WITH DUST MEMBRANE AND METAL CASING BEADS APPLIED TO TWO WALL STUDS OR FURRING MEMBERS SPACED 3/4" APART. ALL CEILING AND WALL JOINTS SHALL BE INSTALLED WHERE SHOWN ON THE ARCHITECTURAL WALL ELEVATIONS AND THE FLOOR AND REFLECTED CEILING PLANS.

CEILING CONTROL JOINT — Scale. NTS — 11

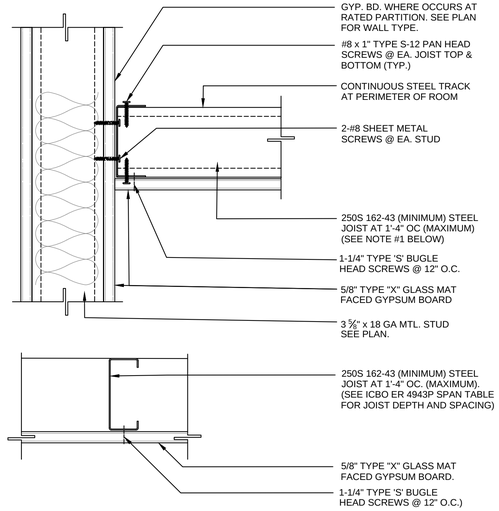

NOTE #1:
ALL JOIST SHALL BE "S"-SECTIONS MINIMUM 33KSI YIELD STRNGTH STEEL. DEFLECTION LIMIT IS = L/360. SPAN LIMIT SHALL BE AS DEFINED IN THE STEEL STUD MANUFACTURERS ASSOCIATION PUBLICATION ICBO ER-4943P.

MAXIMUM CEILING JOIST SPAN
250S162-43 @ 12" OC = 10'-0"
250S162-43 @ 1'-4" OC = 9'-1"
400S162-43 @ 12" OC = 11'-11"
400S162-43 @ 1'-4" OC = 11'-1"
600S162-43 @ 12" OC = 13'-4"
600S162-43 @ 1'-4" OC = 12'-4"

METAL JOIST GYP. BD. CEILING — Scale. NTS — 07

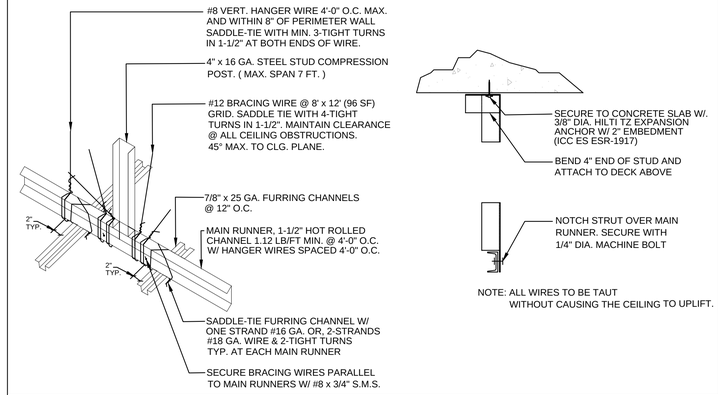

COMPRESSION STRUT AT GYP. BD. CEILING — Scale. NTS — 04

1. USE "ICC-ES EVALUATION REPORT" ESR-3064P OR APPROVED EQUAL.
2. USE 600S125-43 @ 16" O.C. UP TO 16'-0" MAXIMUM SPAN WHERE CEILING SUPPORTED TOILET PARTITIONS OCCUR.
3. STUD TRACKS SHALL BE UNPUNCHED STUDS OF SAME GAUGE AS STUD UNLESS NOTED OTHERWISE
4. ACOUSTIC CEILING TIES (SEE FINISH SCHEDULE) WITH 1 - #8 SCREWS AT EACH JOIST.

	CEILING TIES (BRACING) SPACING	S I Z E	MAXIMUM SPAN		MAXIMUM SPAN	
			SPACING	SPAN	SPACING	SPAN
CEILING GYPSUM BOARD	4' - 0"	362 S 125 - 30	16"	8' - 0"	24"	7' - 0"
	3' - 6"	550 S 125 - 30	16"	11' - 0"	24"	9' - 0"
	3' - 6"	600 S 125 - 30	16"	16' - 0"	24"	13' - 0"

METAL JOIST SCHEDULE — Scale. NTS — 03

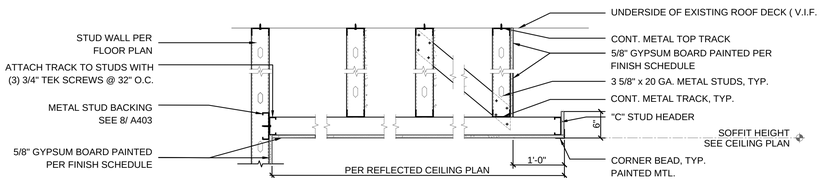

GYP. BD. SOFFIT — Scale. NTS — 10

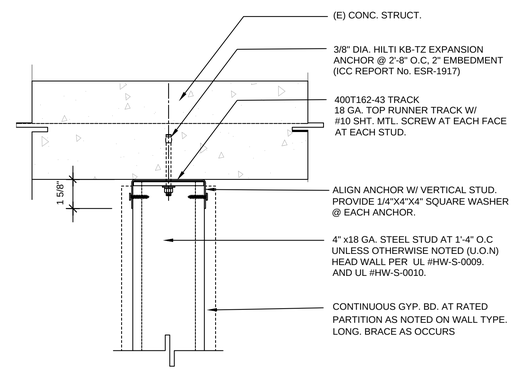

SUSPENDED STUD ATTACHMENT — Scale. NTS — 06

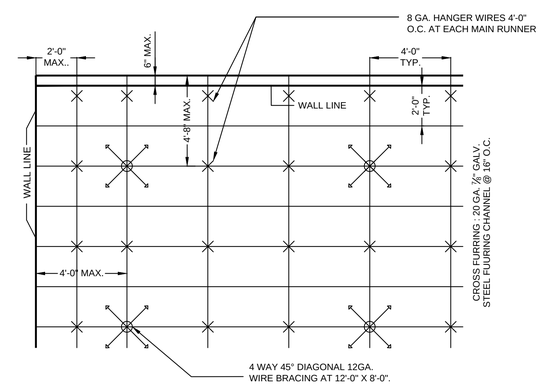

NOTES :
(1) BRACING WIRES AND COMP. STRUT SHALL OCCUR AT EVERY 96S.F. MAXIMUM IN ROOM OVER 96 SQ. FT.
(2) FOR TYPICAL CEILING SECTION, SEE DETAIL 5/-

DIAGRAMMATIC CEILING PLAN — Scale. NTS — 02

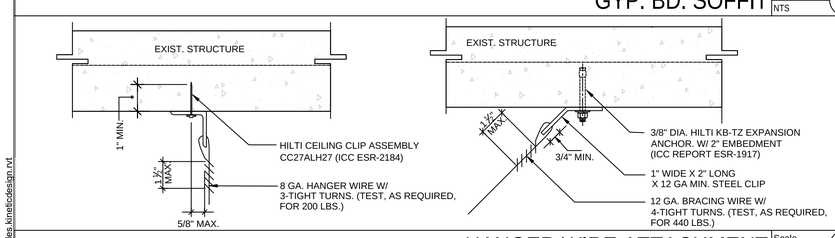

HANGER WIRE ATTACHMENT — Scale. NTS — 09

GYP.BD. CEILING AT WALL — Scale. NTS — 05

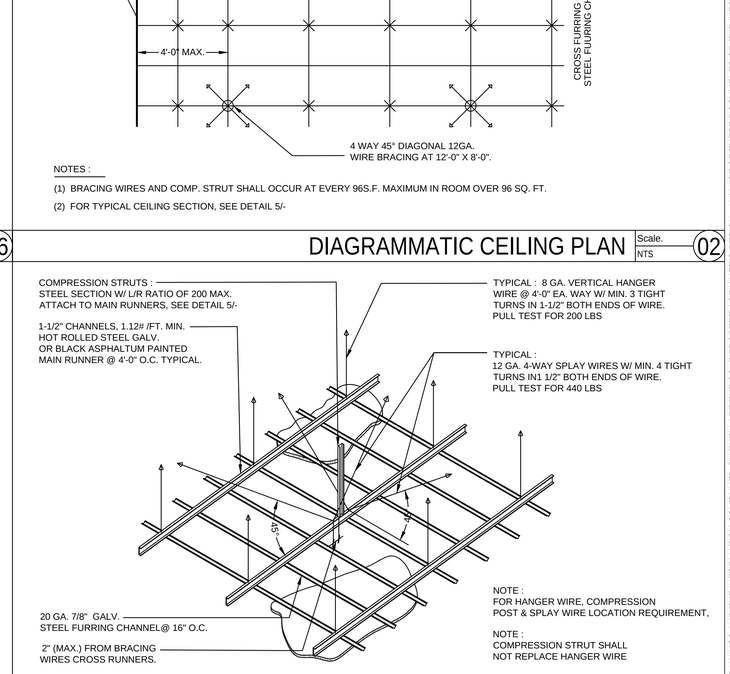

SUSPENDED GYP. BD. CEILING — Scale. NTS — 01

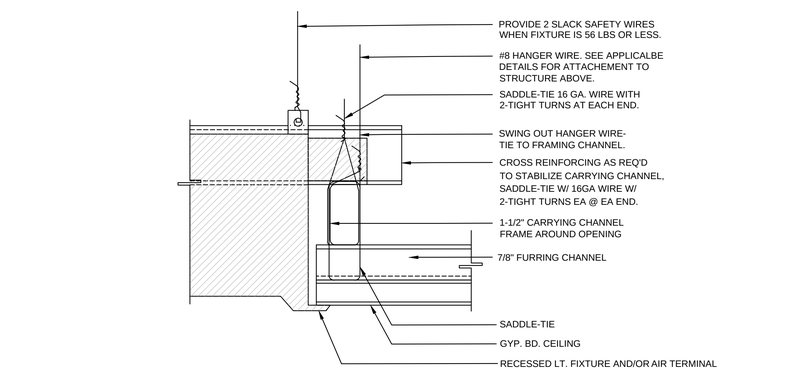

NOTE 1: AIR TERMINALS OR LIGHT FIXTURES TO BE SUPPORTED DIRECTLY TO MAIN RUNNERS AS SHOWN
NOTE 2: PROVIDE 4 SAFETY WIRES WHEN FIXTURE IS OVER 56 LBS

LIGHT FIXTURE / TERMINAL SUPPORT — Scale. NTS — 08

THESE DRAWINGS AND THE INFORMATION CONTAINED ON THEM ARE THE SOLE PROPERTY OF KINETIC DESIGN. ANY USE OF THESE DOCUMENTS OR THE INFORMATION CONTAINED HEREIN, CAN ONLY BE USED WITH WRITTEN PERMISSION FROM KINETIC DESIGN. KINETIC DESIGN ASSUMES NO LIABILITY FOR THESE DRAWINGS OR INFORMATION CONTAINED HEREIN.

KD
Kinetic Design
20381 Lake Forest Dr. Suite B16
Lake Forest, CA. 92630
Main. 951.710.6334 Web. kineticdesign.build
Email. info@kineticdesign.build

STATE OF MISSOURI — JOHN C SCHNEIDER — NUMBER A-2012010034 — ARCHITECT

STAMP DATE: 09/22/2021

NOT FOR CONSTRUCTION

THIS DRAWING IS PROVIDED FOR INFORMATIONAL PURPOSES ONLY. APPROVAL FROM THE ARCHITECT AND GOVERNING JURISDICTIONS MUST BE ATTAINED PRIOR TO THE ISSUANCE OF CONSTRUCTION DOCUMENTS. THE ARCHITECT AND HIS CONSULTANTS ASSUME NO RESPONSIBILITY FOR CONSTRUCTION BIDS OR CONSTRUCTION PERFORMED FROM THESE DRAWINGS.

REVISIONS

No.	DATE	DESCRIPTION
1	09-22-21	PCC #1, CLIENT AND LANDLORD REVISIONS

CLIENT INFORMATION

nektar JUICE BAR.

PROJECT NAME
NEKTER - LEE'S SUMMIT, MO
940 NW PRYOR ROAD, UNIT: G, LEE'S SUMMIT, MISSOURI 64081

SHEET NAME
GYPSUM BOARD CEILING

DRAWN	CHECKED
DATE	09/22/21
SCALE	As indicated
PROJECT NUMBER	
SHEET	A605

C:\Users\arobles\Documents\Nekter Lee Summit MO - ARCH_Central-R21_arobles.kineticdesign.rvt
7/30/2021 6:36:16 PM

NOT USED Scale

NOT USED Scale

NOT USED Scale

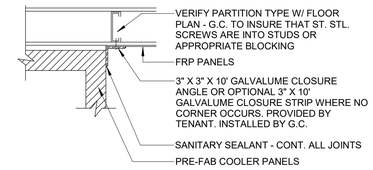

COOLER WALL CLOSURE DETAIL Scale. NTS 4

NOT USED Scale

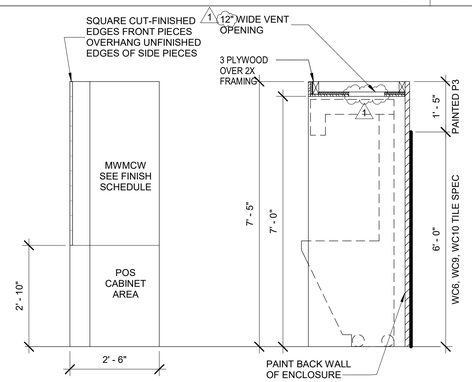

GRAB & GO SECTION & SIDE VIEW Scale. 1/2" = 1'-0" 9

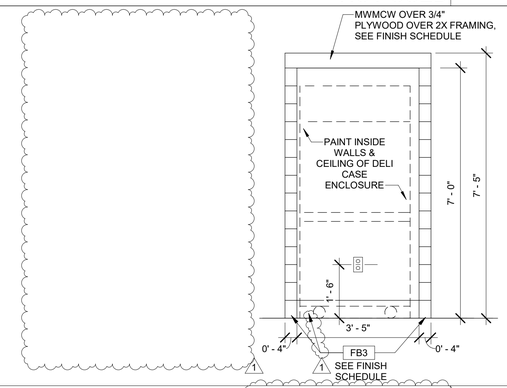

GRAB & GO FRONT ELEVATION Scale. 1/2" = 1'-0" 6

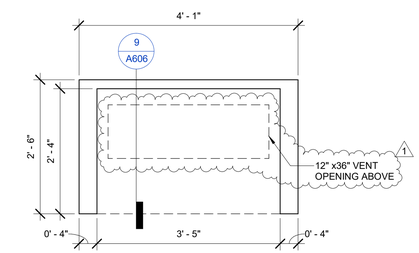

GRAB & GO MILLWORK PLAN Scale. 3/4" = 1'-0" 3

NOT USED Scale

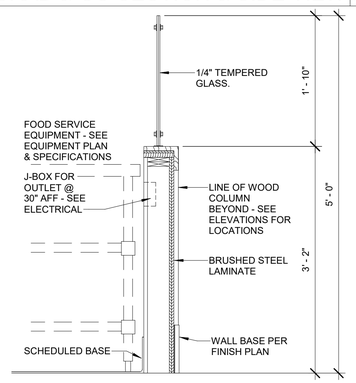

JUICING WALL DETAIL Scale. NTS 8

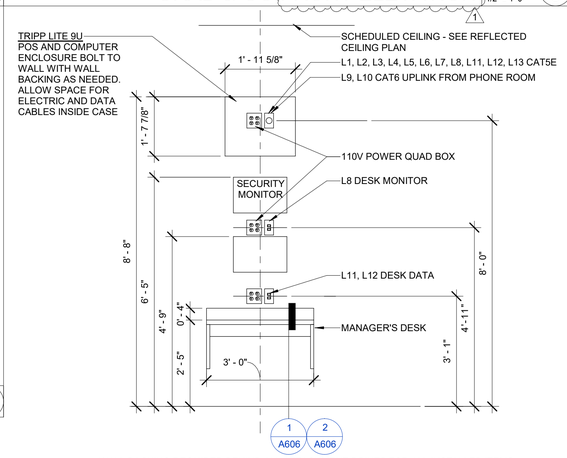

WALL BACKING REQUIRED BEHIND ALL ATTACHMENT POINTS FOR ALL INSTALLED ITEMS.

LEAVE 12" EXTRA LENGTH FROM ALL WALL LOCATIONS.

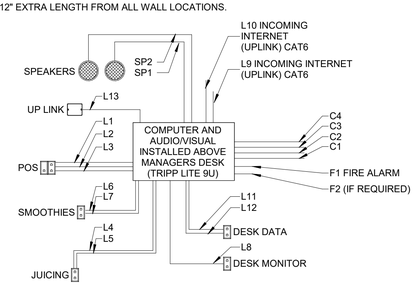

SEE PLANS FOR ALL LOW VOLTAGE BOX LOCATIONS

MANAGER'S DESK ELEVATION Scale. NTS 5

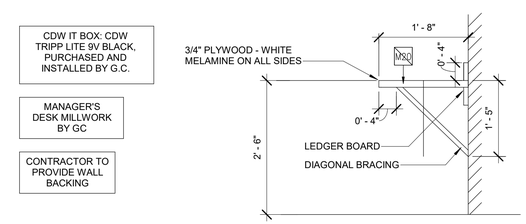

MANAGERS DESK SECTION Scale. NTS 2

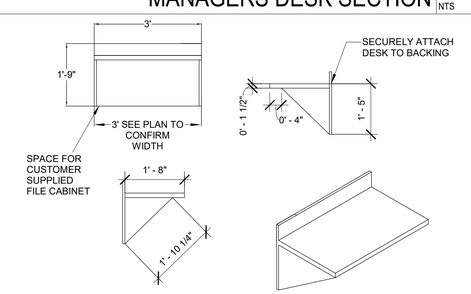

NOTE:

1. MELAMINE COVERED WHITE PLYWOOD 3/4 THICK SECURELY SCREW TO THE WALL. BACKING TO BE INSTALLED TO SECURE DESK TO.INSTALL AT 29" AFF TO DESK TOP

MANAGERS DESK Scale. NTS 1

NOT USED Scale

LOW VOLTAGE (L) CABLE CAT5E
L13 - WIRELESS DATA ACCESS PT.
* LOCATE IN CEILING, CENTERED ABOVE POS COUNTER
* KEEP AWAY FROM CEILING DEVICES, AT LEAST 12" FROM SPRINKLER HEADS, CAMERAS, AND LIGHTS

LOW VOLTAGE (L) CABLE CAT5E - LEAVE 12" EXTRA LENGTH FOR EACH

L1, L2, L3 - TO POS STATION - LOCATION NEXT TO CASH DRAWER
L4, L5 - JUICE PRINTER @ 30" AFF - SEE PLAN FOR LOCATION - TWO TERMINATED CABLES PER PRINTER
L6, L7 - SMOOTIE PRINTER @ 42" AFF - SEE PLAN FOR LOCATION - TWO TERMINATED CABLES PER PRINTER
L8 - MANAGERS DESK MONITOR - 22" SCREEN
L9 , L10 - UPLINK TO MANAGER'S DESK - CAT6 CABLE
L11, L12 - DESK DATA CONNECTIONS

SPEAKERS WIRE - 16GA SPEAKER WIRE-CONNECTED TO GC INSTALLED SPEAKERS - SEE REFLECTED CEILING DRAWING FOR LOCATIONS
SP1 - SPEAKER-R
SP2 - SPEAKER-L

FIRE - IF EQUIPPED
F1 - RED
F2 - WHITE
LOCAL FIRE ALARM REQUIREMENTS NEEDED

CAMERAS - CAT5E CABLE - LEAVE 24" LONG AT CEILING - ADDITIONAL CAMERAS ARE LOCATION-SPECIFIC AND AS REQUESTED.
C1 - CENTER OF CUSTOMER AREA - 360 VIEW - FOH
C2 - COVERS POS AND RETAIL FOH
C3 - COVERING BOH INCLUDING BACK DOOR
C4 - COVERING REMAINING BOH

NOT USED Scale

THESE DRAWINGS AND THE INFORMATION CONTAINED ON THEM ARE THE SOLE PROPERTY OF KINETIC DESIGN. ANY USE OF THESE DOCUMENTS OR THE INFORMATION CONTAINED HEREIN, CAN ONLY BE USED WITH WRITTEN PERMISSION FROM KINETIC DESIGN. KINETIC DESIGN ASSUMES NO LIABILITY FOR THESE DRAWINGS OR INFORMATION CONTAINED HEREIN.

KD
Kinetic Design
20381 Lake Forest Dr. Suite B16
Lake Forest, CA. 92630
Main. 951.710.6334 Web. kineticdesign.build
Email. info@kineticdesign.build

STATE OF MISSOURI
JOHN C SCHNEIDER
NUMBER A-2012010034
ARCHITECT
STAMP DATE: 09/22/2021

NOT FOR CONSTRUCTION

THIS DRAWING IS PROVIDED FOR INFORMATIONAL PURPOSES ONLY. APPROVAL FROM THE ARCHITECT AND GOVERNING JURISDICTIONS MUST BE ATTAINED PRIOR TO THE ISSUANCE OF CONSTRUCTION DOCUMENTS. THE ARCHITECT AND HIS CONSULTANTS ASSUME NO RESPONSIBILITY FOR CONSTRUCTION BIDS OR CONSTRUCTION PERFORMED FROM THESE DRAWINGS.

REVISIONS

No.	DATE	DESCRIPTION
1	09-22-21	PCC #1, CLIENT AND LANDLORD REVISIONS

CLIENT INFORMATION

nektar JUICE BAR.

PROJECT NAME
NEKTER - LEE'S SUMMIT, MO
940 NW PRYOR ROAD, UNIT: G,
LEE'S SUMMIT, MISSOURI 64081

SHEET NAME
MISCELLANOUS DETAILS

DRAWN	CHECKED
DATE	09/22/21
SCALE	As indicated
PROJECT NUMBER	
SHEET	A606

9/22/2021 2:53:16 PM C:\Users\aroble\Documents\Nekter Lee Summit MO - ARCH_Central-R21_aroble.kineticdesign.rvt

	MARK	QT.	DESCRIPTION	EQUIPMENT SIZE	MANUFACTURER	MODEL	REMARKS	NSF	UL	FRANCHISEE (SUPPLIED BY)	CONSOLIDATOR (SUPPLIED BY)	GC (INSTALLATION BY)	CONSOLIDATOR (INSTALLATION BY)	GC (INSTALLATION BY)	PLUMBER HOOK-UP	ELECTRICIAN HOOK-UP	GC PLUG IN/TURN ON
ELECTRONIC SYSTEMS	CH1	1	CHEMICAL DISPENSER				CHEMICAL DISPENSER PER NEKTER SPECIFIATIONS	●	●	●				●	●		●
	DES1A	1	EPOXY COATED WIRE RACK	18"x30"'x86"	THUNDER GROUP	CMEP1830	GC TO ASSEMBLE AS PER PLAN- 4 SHELVES AND POSTS	●	●		●			●			
	DES7A	1	EPOXY COATED WIRE RACK	24"x 30" x 86"	THUNDER GROUP	CMEP2430	GC TO ASSEMBLE PER PLAN - 4 TIER SHELVING ON 86" POSTS	●	●		●			●			
	DES8	1	EPOXY COATED WIRE RACK	24" x 36" x 74"	THUNDER GROUP	CMEP2436	GC TO ASSEMBLE AS PER PLAN- 5 TIER SHELVING ON 74" POSTS	●	●		●			●			
	DES10	1	EPOXY COATED WIRE RACK	24" x 48" x 86"	THUNDER GROUP	CMEP2448	GC TO ASSEMBLE AS PER PLAN- 4 SHELVES AND POSTS 1	●	●		●			●			
	DES11	1	EPOXY COATED WIRE RACK	24"x60"x86"	THUNDER GROUP	CMEP2460	GC TO ASSEMBLE AS PER PLAN- 4 SHELVES AND POSTS	●	●		●			●			
	DES11A	2	EPOXY COATED WIRE RACK	24"x60"x74"	THUNDER GROUP	CMEP2460	GC TO ASSEMBLE AS PER PLAN - 5 TIER SHELVING ON 74" POSTS	●	●		●			●			
	DSR8	1	CHROME WIRE RACK	24" x 36" x 86"	THUNDER GROUP	CMVS1842	GC TO ASSEMBLE AS PER PLAN- 4 TIER SHELVING ON 86" POSTS	●	●		●			●			
	DSS2	2	STAINLESS STEEL WALL MOUNT SHELF	14" W x 48" L	GSW	WS-W1448	GC TO INSTALL AS PER PLAN - ADD WALL BACKING AS NEEDED	●	●		●			●			
	DSS3	1	STAINLESS STEEL WALL MOUNT SHELF	14" x 60"	GSW	WS-W1460	GC TO INSTALL AS PER PLAN - ADD WALL BACKING AS NEEDED	●	●		●			●			
	E110	1	SAFE	20x18x26	MESA SAFE CO.	MFL2014E	SYSTEM SUPPLIED BY VENDOR VIA OWNER				●			●			
	E115	2	PAPER TOWEL DISPENSER OR EQUAL	12 3/4 x 12 1/2 x 8 1/2	SAN JAMAR	T950TBK	G.C. TO LEAVE THE KEY TAPED TO TOP OF THE DISPENSER	●	●	●				●			
	E120	3	WALL MOUNTED SOAP DISPENSER	6 1/8 x4 1/8 x 4 1/4"	SAN JAMAR	S30TBK		●	●	●				●			●
	E125	1	MOP RACK	17 11/16" X 2 5/8"	T&S BRASS	B-0653					●			●			
MISCELLANEOUS EQUIPMENT	E141	1	EMPLOYEE LOCKERS	12W" x 12D" x 78H"	WIN-HOLT EQUIPMENT	WL-66/15/RD/OB	VENTED, OPEN BASE, RIGHT DOORS	●	●		●			●			
	EPOS1	1	POS - REGISTER WITH COMPACT CASH DRAWER				SYSTEM SUPPLIED BY VENDOR VIA OWNER - GC TO PROVIDE ALL REQUIRED CONDUITS			●		●		●		●	
	EPOS2	3	TICKET PRINTER		NCR	7137-0035-8801	SYSTEM SUPPLIED BY VENDOR VIA OWNER - GC TO PROVIDE ALL REQUIRED CONDUITS, QUAD & DATA BOX			●		●		●		●	
	EPOS3	1	CASH DRAWER	4 3/4" H x 16 1/2" W x 16 1/2" D	NCR	CD-101A	SYSTEM SUPPLIED BY VENDOR VIA OWNER			●		●		●		●	
	EWS0	2	EPOXY-COATED WALL MOUNTED WIRE SHELF	14"x30"	THUNDER GROUP	CMEP1430	ABOVE 3 COMP SINK @ 5' AFF ADD WALL BACKING	●	●		●			●			
	EWS3	8	EPOXY COATED WALL BRACKET	14"	THUNDER GROUP	WBEP214	ABOVE 3 COMP SINK @ 5' & 6'-6" AFF, ADD WALL BACKING	●	●		●			●			
	EWS6	2	EPOXY-COATED WALL-MOUNTED WIRE SHELF	14"x60"	THUNDER GROUP	CMEP1460	ABOVE 3 COMP SINK @ 5' AFF ADD WALL BACKING	●	●		●			●			
	F71	1	MANAGER STATION	REFER TO PLANS	MILL WORKER / GC	REFER TO PLANS	GC TO ASSEMBLE AND INSTALL					●		●			
	F76	1	OFFICE CHAIR		DIY		GC TO ASSEMBLE AND INSTALL			●				●			
	ST18	1	STAINLESS STEEL TABLE 4" REAR	2' L x 2' D x 2'11"H, 4" BACKSPLASH	GSW	WT-PB2424	GC TO ASSEMBLE	●	●		●			●			
	ST48	1	STAINLESS STEEL TABLE	30"W x 48"L, 4" BACKSPLASH	GSW	WT-PB3048	2 UNDERSHELVES/CASTERS (S23) - TABLE HEIGHT TO BE 36"- GC TO ASSEMBLE	●	●		●			●			
	ST114	1	TRASH CHUTE (IN-COUNTER, ROUND)	6 1/4" DIA- STAINLESS STEEL	VOLLRATH	3Y0502	6" ROUND IN HOLE - SILICONE ONTO COUNTERTOP			●				●			
	TSJ1	1	SLIM JIM SERVICE AREA TRASH CAN	29.88 H" x 20" W x 11" D	CARLISLE	34202303					●			●			
	RR60	1	NOT USED														
	-	5	SECURITY CAMERA	-	F'EE SUPPLIED	-	GC INSTALLED W/ ELECTRICAN AS LOW VOLT. AND TERMINATION			●				●		●	
	-	2	360 DEGREE SECURITY CAMERA	-	F'EE SUPPLIED	-	GC INSTALLED W/ ELECTRICAN AS LOW VOLT. AND TERMINATION			●				●		●	
	-	2	AUDIO SPEAKERS	-	F'EE SUPPLIED	-	GC INSTALLED W/ ELECTRICAN AS LOW VOLT. AND TERMINATION			●				●		●	
SPECIALTY EQUIPMENT	E5	1	REACH-IN SOLID SWING DOOR FREEZER	54 1/8" W x 29 1/2" D x 78 3/8" H	TRUE	TS-49FG-HC~FGD01	ELECTRICAL 115 / 60 / 1 - 9.6 A, HINGE LEFT	●	●		●			●			●
	E22	1	FOOD REFRIGERATED PREP TABLE	28"L x 30"D x 37"H	TRUE	TSSU-27-08	ELECTRICAL - 115V/60/1 - 4.9A., WITH FLAT LID	●	●		●			●			●
	E27	1	FOOD REFRIGERATED	28"L x 30"D x 33.5"H	TRUE	TWT-27F-HC	ELECTRICAL - 115V/60/1 - 2.0A., HINGE RIGHT	●	●		●			●			●
	E30	1	WORKTOP FREEZER	49"L x 30"D x 33.5"H	TRUE	TWT-48F-HC	ELECTRICAL - 115V/60/1 - 3.2A.	●	●		●			●			●
	E40	1	REFRIGERATOR SELF SERVICE COUNTER	39" L x 28"D 78 1/2" H	TURBO AIR	TOM40-B	ELECTRICAL: 115 / 60 / 1 / 15A; INSTALL TOTAL OF (6) CASTERS, ONE AT EACH CORNER AND (2) AT THE CENTER EDGES TO ENCOMPASS THE ENTIRE EDGE OF THE UNIT	●	●		●			●			●
	E48	1	DIPPER WELL SQUARE	15 1/4" W x 10 5/8" D x 5 1/4" H	SERVER	87750	ELECTRICAL: 120V / 400W / 3.3A	●	●		●			●			●
	E51	3	BLENDER	8"Wx9"Dx20.3"H	VITAMIX	748	ELECTRICAL: 120 V, 50/60 Hz, 13.0 A	●	●		●			●			●
	E58	2	MULTI FRUIT JUICER	20.1" x 19.7" x 11.4"	ZUMMO	Z22C	ELECTRICAL - 110V / 60HZ / 800W	●	●		●			●			●
	E63	1	ICE MAKER	39" x 24" x 24.58"	ICE-O-MATIC	ICEU220A	ELECTRICAL - 110V/60/1 - 11.9MCA / FUSE SIZE - 15.- GC/PLUMBER TO INSTALL AS PER PLAN	●	●		●			●	●		●
	E64	1	REACH-IN SINGLE SOLID DOOR FREEZER, WITH 6" CASTERS	27" W x 29 7/8" D x 78 3/8" H	TRUE	T-23FG-HC~FGD01	ELECTRICAL 115 / 60 / 1 - 6.2 A, HINGE LEFT	●	●		●			●			●
	E65	1	DEEP WELL UTILTY CART	17 1/2"W x 34 1/2" L x 32 3/4" H	LAKESIDE MANUFACTURING	2521	INSTALL TOTAL OF (4) CASTERS, ONE AT EACH CORNER	●	●		●			●			
	E68	1	WATER FILTER	-	ICE-O-MATIC	IFQ1					●			●			
	E99	3	SNEEZE GUARD GLASS	-	TBD	TBD						●		●			
	E105	4	SNEEZE GUARD POST		TBD	TBD						●		●			
	E158	1	OATMEAL WARMER	17 3/8" W x 15 1/4" D x 13 1/2" H	ZOJIRUSHI	NYC-36	ELECTRICAL 120V / 1,300 W, STAINLESS STEEL COLOR	●	●		●			●			●
	SE-01	1	FIRE EXTINGUISHER	-								●		●			
	E42	6	DELI CASE CASTERS	-	KROWNE METAL	28-109S	PROVIDE TOTAL OF 6 CASTERS, SEE CASTER NOTE FOR E40				●			●			
	E63.1	1	ICE SCOOP	-	INFRA	ISH-512					●			●			
	E79	1	WALK-IN COOLER	8'-4" x 8'-0" x 6'-0"	MASTER-BILT	QSB8468-CX					●			●			
	E126	2	TICKET RAIL	18" L	TABLECRAFT	5518					●			●			
	E128	2	TICKET RAIL	36" L	TABLECRAFT	5536					●			●			
	E129	1	KNIFE RACK	24" L	ONEIDA	MTH-24P						●		●			
FURNITURE	F3B	1	WINDOW BAR	12"Wx7'-0"L	TBD	TBD	CUSTOM BUTCHER BLOCK BAR TOP			●		●					
	F3C	1	ADA WINDOW BAR	12"Wx5'-0"L	TBD	TBD	CUSTOM BUTCHER BLOCK BAR TOP; POPLAR, 1 1/2" STOCK WITH MS1 & FB3					●		●			
	F25B	5	ADA BOLT DOWN BAR BASE - INTERIOR	-	ASTRA	1238	ACCESSIBLE HEIGHT BAR BOLT DOWN BASE			●		●					
	F44	2	BACKLESS BARSTOOL		ASTRA	5697	GC TO ASSEMBLE AND INSTALL			●				●			
ARTWORK	M1	1	NEKTER MISSOURI STATE MEDALLION	-	F'EE SUPPLIED		GC INSTALLED			●				●			
	WAF1	1	HORIZONTAL WALL ART 1	-	F'EE SUPPLIED ARTWORK		FRANCHISEE PROVIDED ARTWORK, GC INSTALLED			●				●			
	WAF2	2	VERTICAL WALL ART	-	F'EE SUPPLIED ARTWORK		FRANCHISEE PROVIDED ARTWORK, GC INSTALLED			●				●			

	MARK	QT.	DESCRIPTION	EQUIPMENT SIZE	MANUFACTURER	MODEL	CW	HW	W	V	GAS	CFH	REMARKS	NSF	UL	FRANCHISEE (SUPPLIED BY)	CONSOLIDATOR (SUPPLIED BY)	GC (INSTALLATION BY)	CONSOLIDATOR (INSTALLATION BY)	GC (INSTALLATION BY)	PLUMBER HOOK-UP	ELECTRICIAN HOOK-UP	GC PLUG IN/TURN ON
							PLUMBING CONNECTION SIZE																
EQUIPMENT	FX16	3	FLOOR SINK	12" x 12" x 6"	ZURN	1900-25	0"	0"	1 1/2"	1 1/2"				●	●			●		●	●		
	S1	2	16" WIDE HAND SINK W/ SPLASH GUARDS	H = 18-1/2" x W = 16" x D = 15"	KROWNE	HS-26L	1/2"	1/2"	2"	1 1/2"				●	●		●			●	●		
	S7 & S8	1	MOP SINK COMPOSITE/MOP SINK w/ BACK FLOW PREVENTER DEVICE	24" x 24" x 12"/8" WALL MOUNTING MIXING	MUSTEE/ T& S	63M / B-0665-BSTR	1/2"	1/2"	3"	2"			COMPOSITE SINKS OK TO USE IN LIEU OF SST	●	●		●			●	●		
	S17	1	SINGLE COMPARTMENT SINK (LEFT DRAIN BOARD)	24" x 39 1/8" x 45"	GSW	SE18181L	1/2"	1/2"	2"	1 1/2"			MUST HAVE A WASTE HANDLE BRACKET PER BOEL TRAP (FX25)	●	●		●			●	●		
	S57	1	3 COMPARTMENT SINK - CORNER	57 1/2"x57 1/2"x30"	GSW	SE18183C	1/2"	1/2"	2"	1 1/2"			MUST HAVE A WASTE HANDLE BRACKET PER BOWL FOR TRAP (FX25)	●	●		●			●	●		
	S62	4	WASTE VALVE	-	T&S BRASS												●			●	●		
	S73	2	FAUCET ASSEMBLY AT 3-COMPARTMENT CORNER AND SINGLE COMPARMENT SINK	- 1	T&S BRASS 1	B-0230-CR-LN, BR-0230-LN, 060X, B-0230-K							QUARTER TURN CERMA CARTRIDGES, LOW LEAD, ADA COMPLIANT. 8" STANDARD NOZZLE, STREAM OUTLET, LOW LEAD, CHROME-PLATED BRASS.	●			●			●	●		
	S75	1	SINGLE FAUCET WALL-MOUNT FILLER	-	T&S BRASS	B-0212							SINK FAUCET WITH 6" SWING NOZZLE, WALL MOUNTED				●			●	●		
	S76	1	THREE COMPARTMENT SINK - PRE-RINSE & FAUCET ASSEMBLY	-	T&S BRASS	5PR-8W12, B-0230-K							EQUIP PRE-RINSE UNIT, 8" CENTERS, WALL MOUNT BASE, 6" BRACKET, 12" ADD-ON FAUCET				●			●	●		
	WH-1	1	WATER HEATER	55"H x 20.5" DIAM.	A.O. SMITH	DEN-52	3/4"	3/4"						●	●			●		●	●	●	

EQUIPMENT PLAN NOTES

1. SEE FIXTURE PLAN AND FIXTURE DETAILS FOR FIXTURE INFORMATION.
2. SEE REFLECTED CEILING PLAN FOR SOFFIT AND LIGHTING INFORMATION.
3. NOTIFY ARCHITECT IMMEDIATELY OF ANY INCONSISTENCIES OR DISCREPANCIES WITH PLANS IN RELATION TO EXISTING FIELD CONDITIONS.
4. WRITTEN DIMENSIONS TAKE PRECEDENCE OVER SCALE ON THE CONSTRUCTION DOCUMENTS. DO NOT EVER SCALE DRAWINGS.
5. DIMENSIONS ARE FROM THE FACE OF FINISHED WALL (GWB) TO FACE OF FINISHED WALL (GWB), UNLESS OTHERWISE NOTED ON PLANS.
6. ALL MANUFACTURED ARTICLES, MATERIALS AND EQUIPMENT SHALL BE APPLIED, INSTALLED, CONNECTED, ERECTED, CLEANED AND CONDITIONED IN ACCORDANCE WITH THE MANUFACTURER'S WRITTEN SPECIFICATIONS AND/OR INSTRUCTIONS.
7. ALL WORK SHALL BE EXECUTED IN A MANNER ACCEPTABLE TO THE ARCHITECT AND OWNER, UNLESS NOTED OTHERWISE. THE GENERAL CONTRACTOR SHALL PROVIDE AND PAY ALL LABOR, MATERIALS EQUIPMENTS, TOOLS, CONSTRUCTION EQUIPMENT, MACHINERY, TRANSPORTATION AND OTHER SERVICES AND FACILITIES NECESSARY FOR PROPER AND TIMELY EXECUTION OF WORK.
8. THE CONTRACTOR WARRANT TO THE OWNER AND TO THE ARCHITECT THAT ALL MATERIALS AND EQUIPMENT FURNISHED UNDER THE CONTRACT ARE NEW UNLESS OTHERWISE SPECIFIED, AND THAT ALL WORKS SHALL BE AS SPECIFIED AND FREE OF DEFECTS.
9. ALL OUTSIDE CORNERS AT DRYWALL PARTITION AND FURRINGS TO HAVE METAL CORNER BEADS SPACKLE AND SMOOTH.
10. PROVIDE DIAGONAL BRACING TO STRUCTURE ABOVE ALL NEW DOORS, GLAZING HEADS AND JAMBS AS REQUIRED TO MAKE ASSEMBLY RIGID.
11. THE GENERAL CONTRACTOR IS RESPONSIBLE FOR THE FINAL CLEAN UP OF THE AREA OF WORK AND AREA AFFECTED BY CONSTRUCTION; TO INCLUDE BUT NOT LIMITED TO FLOORS, MILLWORK, FIXTURES, ETC. FOLLOWING THE INSTALLATION OF THE MILLWORK.
12. DRINK DISPENSER CONTROL AT ACCESSIBLE REACH RANGES FROM 15-1/8" MIN. TO 47-7/8" MAX.
13. ALL EQUIPMENT, INCLUDING SHELVING, MUST BE SUPPORTED BY 6" HIGH, EASILY CLEANABLE LEGS, COMMERCIAL CASTERS, OR COMPLETELY SEALED IN POSITION BY 4" HIGH CONTINUOUSLY COVED BASE OR CONCRETE CURB TO FACILITATE EASE OF CLEANING.
14. ALL NEW AND REPLACEMENT FOOD RELATED AND UTENSIL RELATED EQUIPMENT SHALL BE CERTIFIED OR CLASSIFIED BY AN AMERICAN NATIONAL STANDARDS INSTITUTE (ANSI) ACCREDITED CERTIFICATION PROGRAM (NSF, ITS, ETL, EPH, UL SANITATION OR CSL).

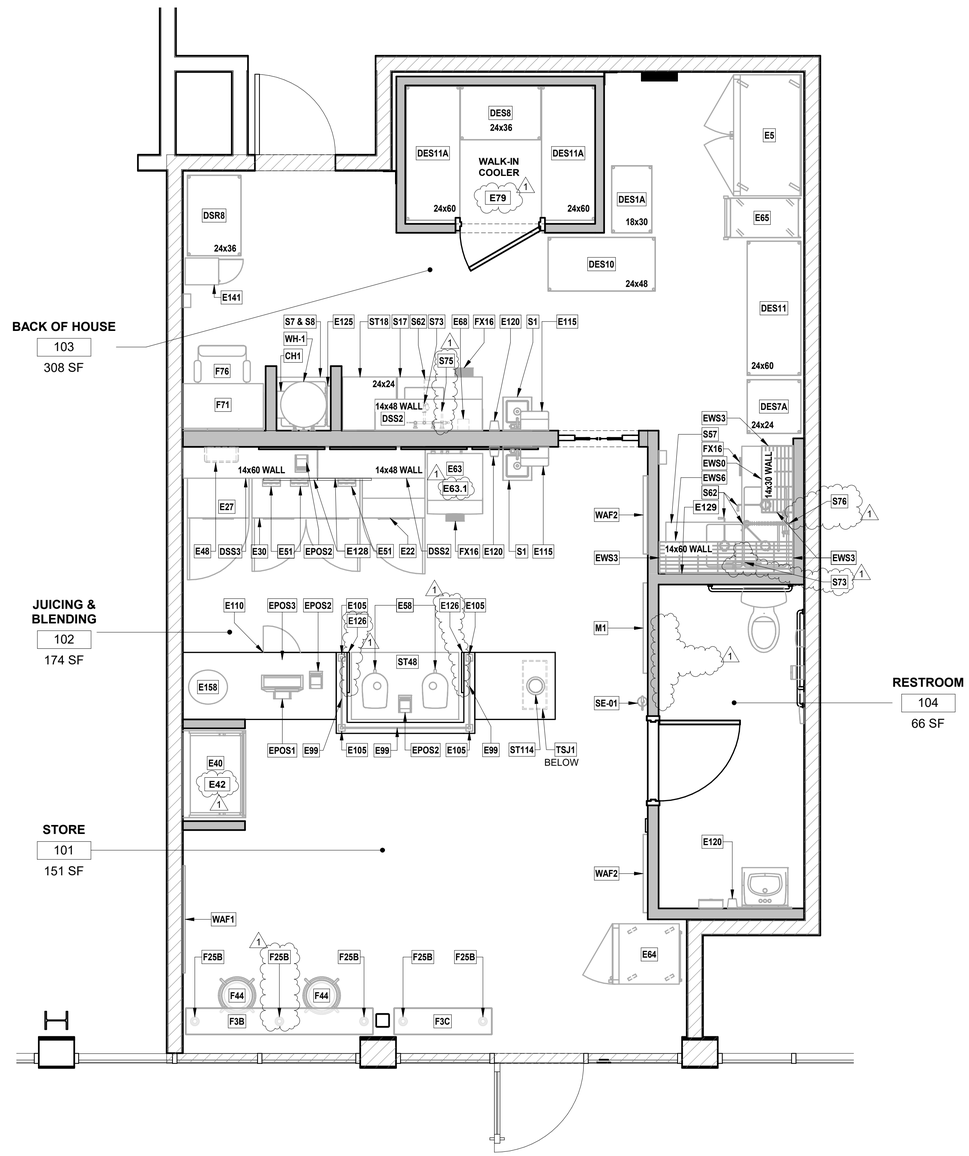

EQUIPMENT / FIXTURE PLAN 1 Scale 3/8" = 1'-0"

KD
Kinetic Design
20381 Lake Forest Dr. Suite B16
Lake Forest, CA. 92630
Main. 951.710.6334 Web. kineticdesign.build
Email. info@kineticdesign.build

STATE OF MISSOURI
JOHN C SCHNEIDER
NUMBER A-2012010034
ARCHITECT

STAMP DATE: 09/22/2021

NOT FOR CONSTRUCTION

THIS DRAWING IS PROVIDED FOR INFORMATIONAL PURPOSES ONLY. APPROVAL FROM THE ARCHITECT AND GOVERNING JURISDICTIONS MUST BE ATTAINED PRIOR TO THE ISSUANCE OF CONSTRUCTION DOCUMENTS. THE ARCHITECT AND HIS CONSULTANTS ASSUME NO RESPONSIBILITY FOR CONSTRUCTION BIDS OR CONSTRUCTION PERFORMED FROM THESE DRAWINGS.

REVISIONS

No.	DATE	DESCRIPTION
1	09-22-21	PCC #1, CLIENT AND LANDLORD REVISIONS

CLIENT INFORMATION

nektar JUICE BAR.

PROJECT NAME
NEKTER - LEE'S SUMMIT, MO
940 NW PRYOR ROAD, UNIT: G,
LEE'S SUMMIT, MISSOURI 64081

SHEET NAME
EQUIPMENT/FIXTURE PLAN AND SCHEDULES

DRAWN
CHECKED
DATE 09/22/21
SCALE As indicated
PROJECT NUMBER
SHEET
A701

THESE DRAWINGS AND THE INFORMATION CONTAINED ON THEM ARE THE SOLE PROPERTY OF KINETIC DESIGN. ANY USE OF THESE DOCUMENTS OR THE INFORMATION CONTAINED HEREIN, CAN ONLY BE USED WITH WRITTEN PERMISSION FROM KINETIC DESIGN. KINETIC DESIGN ASSUMES NO LIABILITY FOR THESE DRAWINGS OR INFORMATION CONTAINED HEREIN.

C:\Users\akobes\Documents\Nektar Lee Summit MO - ARCH_Central-R21_akobes.kineticdesign.rvt
9/22/2021 2:37:31 PM

FINISH SCHEDULE

TYPE	TAG	FINISH MATERIAL	MANUFACTURER	MODEL NUMBER	SIZE	REMARKS	PROVIDED BY VENDOR	PROVIDED BY CONSOLIDATOR	PROVIDED BY GC	INSTALLED BY CONSOLIDATOR	INSTALLED BY GC
TILE FLOORS	TF1	PORCELAIN TILE - DARK	DALTILE	FOREST PARK / TIMBERLAND - FP97	W = 9" x L = 36"				●		●
	TF2	PORCELAIN TILE - LIGHT	DALTILE	SADDLE BROOK / FARMHOUSE - SD14	W = 6" x L = 36"				●		●
VINYL FLOORING	VF2	VINYL PLANKS - LIGHT	DUCHATEAU	GRAND COLLECTION / HYDE	W = 9" x L = 60"				●		●
	VF3	VINYL PLANKS - DARK	DUCHATEAU	VINYL DELUXE - LUXE TECH - 20 COLLECTION	W = 9" x L = 60"				●		●
QUARRY TILE	QT1	QUARRY TILE - GRAY	DALTILE	ARID GRAY (ABRASIVE) - 0Q42661A	6" x 6"				●		●
	QT2	QUARRY TILE COVE BASE - GRAY	DALTILE	ARID GRAY - Q3565	5" x 6"				●		●
	QT3	QUARRY TILE OUTSIDE CORNER - GRAY	DALTILE	ARID GRAY - QC-3565	1" x 5"				●		●
	GT-2	GROUT - GRAY QUARRY TILE	CUSTOM BUILDING PRODUCTS	GRAYSTONE #542	MIN. GROUT LINE - 3/16"	SERVICE AREA / BACKROOM / STORAGE AREA			●		●
CONCRETE FLOORING	RC1	RAW CONCRETE	WESTCOAST	EC-11 - WATER BASED EPOXY - CLEAR		FRONT OF HOUSE / BACK OF HOUSE / RESTROOM			●		●
	RC1A	RAW CONCRETE - SLIP RESISTANT	WESTCOAST	CA-30 SMALL SAFE GRIP		FRONT OF HOUSE / BACK OF HOUSE / RESTROOM			●		●
	SC1	STAINED CONCRETE	KEMIKO						●		●
WALL COVERINGS	WC2	WALL TILE GROUT	CUSTOM BUILDING PRODUCTS	BRIGHT WHITE - #381	MIN. GROUT LINE - 1/8"				●		●
	WC3	FRP	MARLITE - STANDARD FRP OR EQUAL	BRIGHT WHITE - P 199 / CLASS A	4' x 8'	BOH - ONE SHEET ABOVE BASE OR 96" PAINT ABOVE WHITE (P5)			●		●
	WC6	SUBWAY WALL TILE	DALTILE	COLOR WHEEL COLLECTION - GLAZED CERAMIC - 0190 ARCTIC WHITE	W = 4" x L = 16"	PRODUCTION AREA / RESTROOM - MAX HEIGHT 72" AFF OR AS PER PLAN			●		●
	WC7	SUBWAY TILE BASE	DALTILE	COLOR WHEEL COLLECTION - SANITARY COVE BASE - S3619TN	4-1/4" x 12-7/8"	SERVICE AREA / RESTROOM / BACK OF HOUSE			●		●
	WC9	SUBWAY TILE WALL BULLNOSE TOP	DALTILE	LINEAR COLOR WHEEL COLLECTION - BULLNOSE TOP - S-44D9	4"X16"	SERVICE AREA / RESTROOM / BACK OF HOUSE			●		●
	WC10	SUBWAY TILE WALL BULLNOSE CORNER	DALTILE	LINEAR COLOR WHEEL COLLECTION - BULLNOSE CORNER - SN-44D9	4"X4"	SERVICE AREA / RESTROOM / BACK OF HOUSE			●		●
	W11	WOOD PLANK			1"X4"	REFER TO NEKTER CORPORATE FOR WOOD SPECIES AND STAIN TO BE USED. WOOD SPECIES MUST HAVE A MINIMUM CLASS C FLAME/SMOKE SPREAD PER IFC TABLE 803.3. DOCUMENTATION OF FLAME/SMOKE SPREAD IS TO BE PROVIDED TO CSFD INSPECTOR.			●		●
PAINT	P1	PAINT - EGGSHELL FINISH	DUNN EDWARDS OR EQUAL	DE6221 - FLINTSTONE		SEE FINISH PLAN AND INTERIOR ELEVATIONS FOR LOCATION AND EXTENT OF FINISH			●		●
	P2	PAINT - EGGSHELL FINISH	DUNN EDWARDS OR EQUAL	DE6391 - BLACK RUSSIAN		SEE FINISH PLAN AND INTERIOR ELEVATIONS FOR LOCATION AND EXTENT OF FINISH			●		●
	P3	PAINT - EGGSHELL FINISH	DUNN EDWARDS OR EQUAL	DE5719 - ECOLOGICAL		SEE FINISH PLAN AND INTERIOR ELEVATIONS FOR LOCATION AND EXTENT OF FINISH			●		●
	P4	PAINT - EGGSHELL FINISH	DUNN EDWARDS OR EQUAL	DE6220 - POROUS STONE		SEE FINISH PLAN AND INTERIOR ELEVATIONS FOR LOCATION AND EXTENT OF FINISH			●		●
	P5	PAINT - EGGSHELL FINISH	DUNN EDWARDS OR EQUAL	DEW380 -WHITE		SEE FINISH PLAN AND INTERIOR ELEVATIONS FOR LOCATION AND EXTENT OF FINISH			●		●
	P6	PAINT - EGGSHELL FINISH - SEMI GLOSS	DUNN EDWARDS OR EQUAL	NEKTER BLUE		SEE FINISH PLAN AND INTERIOR ELEVATIONS FOR LOCATION AND EXTENT OF FINISH			●		●
	P7	PAINT - EGGSHELL FINISH - SEMI GLOSS	SHERWIN WILLIAMS	SOFTWARE SW7074		SEE FINISH PLAN AND INTERIOR ELEVATIONS FOR LOCATION AND EXTENT OF FINISH			●		●
FLOOR BASE	FB1	DARK FLOOR BASE TILE	DALTILE	FOREST PARK - TIMBERLAND FP97					●		●
	FB2	LIGHT FLOOR BASE TILE	DALTILE	SADDLEBROOK - FARMHOUSE SD14					●		●
	FB3	RUBBER BASE - VINYL FLOOR	FLEXCO	BLACK - BASE 2000 TP WALL BASE	HEIGHT - 4" OR 6" (1/8" THICK)				●		●
	FB4	CERAMIC TILE BASE	DALTILE	WHITE - S3619TN-THN-LIP-0100	L = 6" x H = 6"				●		●
MILLWORK STAINS	MWMCWS	WOOD - STAIN	SHERWIN WILLIAMS	PRODUCT NAME: THE KRAKEN PRODUCT #: N21-318545		AS PER PLAN - COATS: ONE LIGHT COAT			●		●
	MWTC	WOOD TOP COAT	MINWAX	WATER BASED POLYURETHANE OR EQUAL / SHEEN: CLEAR SATIN / COATS: TWO		AT JUICING / TOPPING			●		●
MILLWORK	MWWL	FRONT LINE WHITE LAMINATE	FORMICA	COLOR CORE 2 LAMINATE - WHITE (MATTE FINISH) - # 949 "WHITE"	SHEET - W=4' L=10'	AT POS / HAND OFF			●		●
	MWBL	FRONT LINE BRUSHED STEEL LAMINATE	OCTOPUS PRODUCTS	MELAMINE BOARD - OCTOLAM - 271 - BRUSHED STEEL	VARIES	AT FRONT OF HOUSE COUNTER			●		●
	MWWS	WOOD SPECIES	VARIES	POPLAR	CAPS - 1 1/2" STOCK / VERTICALS - 3/4" STOCK	AT FRONT OF HOUSE COUNTER			●		●
BAR TOP / DELI CASE	MWMCW	WOOD WRAP - WOOD SPECIES	VARIES	POPLAR	3/4" STOCK - NATURAL	SQUARE CUT - FRONT PANELS TO OVERHANG SIDE PANELS / STAINED AND FINISHED EDGES (SEE MWTC)			●		●
	MWTC	WOOD WRAP - TOP COAT	MINWAX	WATER BASED POLYURETHANE OR EQUAL / SHEEN: CLEAR SATIN / COATS: TWO					●		●
	MWMCWS	WOOD - STAIN	SHERWIN WILLIAMS	PRODUCT NAME: THE KRAKEN PRODUCT #: N21-318545		AS PER PLAN - COATS: ONE LIGHT COAT			●		●
	MWDR	CUSTOM BUTCHER BLOCK BAR TOP		ARID GRAY - QC-3565	1" x 5"				●		●

FINISH SCHEDULE NOTES

1. REFERENCE INTERIOR ELEVATIONS AND ROOM FINISH PLAN FOR EXTENT OF FINISHES.
2. ALL GYPSUM BOARD TO BE 5/8" THICK TAPED, SPACKLED, SANDED, AND READY FOR PAINT.
3. REFER TO MANUFACTURER SPECIFICATIONS FOR FINISH MATERIALS.
4. G.C. TO REPAIR/PROVIDE INSULATION AS REQUIRED PRIOR TO PAINT.

LEGEND

ROOM NAME ### — ROOM TAG

(E) DEMISING WALL, GC TO VERIFY THE EXISTING DEMISING WALL IS BUILT FLOOR TO DECK ABOVE. NOTIFY ARCHITECT IMMEDIATELY IF OTHERWISE.

(N) NON-RATED PARTITION WALL

(E) PARTITION WALL TO REMAIN

---- — FINISH TAG / LIMIT OF WALL FINISH

P5 — CEILING FINISH TAG
P5 — BASE FINISH TAG
P5 — FLOOR FINISH TAG

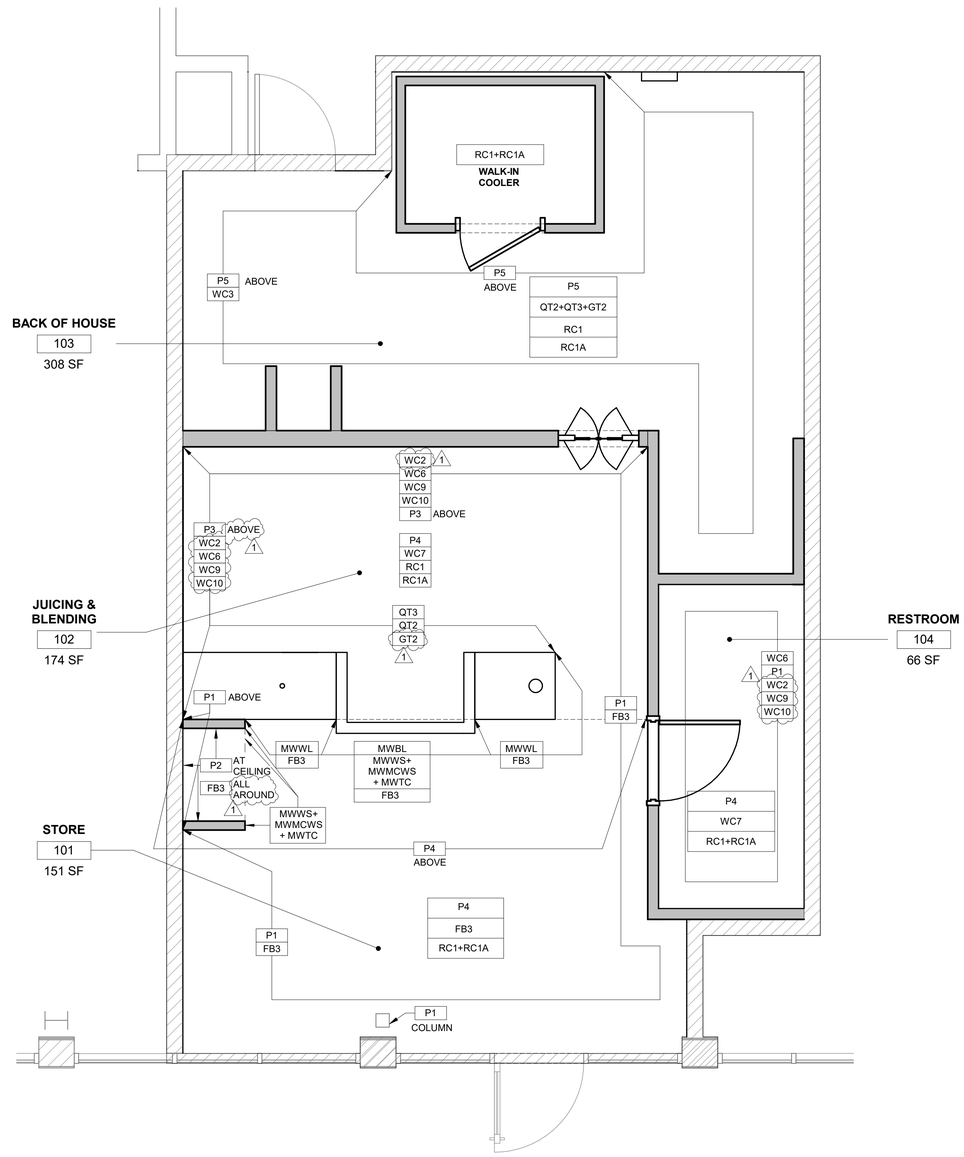

FINISH PLAN — Scale. 3/8" = 1'-0" — 1

KD
Kinetic Design
20381 Lake Forest Dr. Suite B16
Lake Forest, CA. 92630
Main. 951.710.6334 Web. kineticdesign.build
Email. info@kineticdesign.build

STATE OF MISSOURI — JOHN C SCHNEIDER — NUMBER A-2012010034 — ARCHITECT

STAMP DATE: 09/22/2021

NOT FOR CONSTRUCTION

THIS DRAWING IS PROVIDED FOR INFORMATIONAL PURPOSES ONLY. APPROVAL FROM THE ARCHITECT AND GOVERNING JURISDICTIONS MUST BE ATTAINED PRIOR TO THE ISSUANCE OF CONSTRUCTION DOCUMENTS. THE ARCHITECT AND HIS CONSULTANTS ASSUME NO RESPONSIBILITY FOR CONSTRUCTION BIDS OR CONSTRUCTION PERFORMED FROM THESE DRAWINGS.

REVISIONS

No.	DATE	DESCRIPTION
1	09-22-21	PCC #1, CLIENT AND LANDLORD REVISIONS

CLIENT INFORMATION

nektar JUICE BAR.

PROJECT NAME
NEKTER - LEE'S SUMMIT, MO
940 NW PRYOR ROAD, UNIT: G,
LEE'S SUMMIT, MISSOURI 64081

SHEET NAME
ROOM FINISH PLAN AND SCHEDULE

DRAWN	CHECKED
DATE	09/22/21
SCALE	As indicated
PROJECT NUMBER	
SHEET	A801

THESE DRAWINGS AND THE INFORMATION CONTAINED ON THEM ARE THE SOLE PROPERTY OF KINETIC DESIGN. ANY USE OF THESE DOCUMENTS OR THE INFORMATION CONTAINED HEREIN, CAN ONLY BE USED WITH WRITTEN PERMISSION FROM KINETIC DESIGN. KINETIC DESIGN ASSUMES NO LIABILITY FOR THESE DRAWINGS OR INFORMATION CONTAINED HEREIN.

C:\Users\arobles\Documents\Nekter Lee Summit MO - ARCH_Central-R21_arobles.kineticdesign.rvt
9/22/2021 2:37:34 PM