PROPOSED BUILDING CONVERSION
TO CREATE A:

DUNKIN'

SCOPE OF WORK

BUILDING CONVERSION OF AN EXISTING RESTAURANT WITH DRIVE THRU TO CREATE A DUNKIN' RESTAURANT WITH DRIVE THRU. EXTERIOR BUILDING MINOR FINISH UPGRADE AND NEW SIGNAGE AND INTERIOR BUILDING CONVERSION TO INCLUDE REMOVAL OF THE EXISTING EQUIPMENT, INTERIOR NON-BEARING WALL PARTITIONS, WALL FINISHES AND PROVIDING DUNKIN' / BASKIN ROBBINS EQUIPMENT, WALL, CEILING, AND FLOOR FINISHES THROUGHOUT. SEE PLANS FOR MORE INFORMATION.

GRAPHIC SYMBOLS

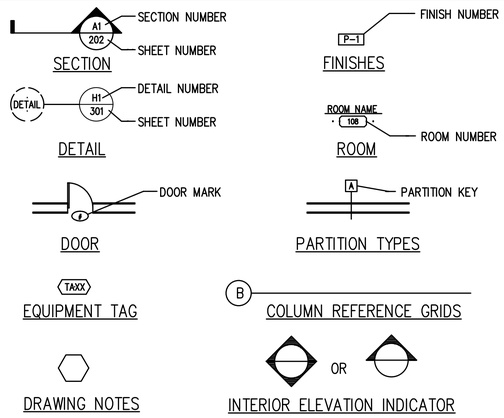

ABBREVIATION INDEX

&	AND	F.D.	FLOOR DRAIN	P.S.F.	PER SQUARE FOOT
@	AT	FIN.	FINISH	P.S.I.	PER SQUARE INCH
A/C	AIR CONDITIONING	FL.	FLOOR	PTD.	PAINTED
A.D.	AREA DRAIN	F.O.	FACE OF	P.V.C.	POLY VINYL CHLORIDE
A.F.F.	ABOVE FINISH FLOOR	FT.	FOOT	Q.T.	QUARRY TILE
ALUM.	ALUMINUM	FURN.	FURNITURE	QTY.	QUANTITY
ALT.	ALTERNATE	GA.	GAUGE	R.A.	DUNKIN' BRANDS
APPROX.	APPROXIMATE	GALV.	GALVANIZED	RAD.	RADIUS
BD.	BOARD	GYP. BD.	GYPSUM BOARD	REF.	REFRIGERATOR
BLDG.	BUILDING	HDWD.	HARDWOOD	REINF.	REINFORCING
BM.	BEAM	HDR.	HEADER	REV.	REVISION
BSMT.	BASEMENT	H.M.	HOLLOW METAL	REQ'D	REQUIRED
BTWN.	BETWEEN	HORIZ.	HORIZONTAL	RESIL.	RESILIENT
BOT.	BOTTOM	HGT.	HEIGHT	RM.	ROOM
C.L.	CENTER LINE	I.D.	INSIDE DIAMETER	R.O.	ROUGH OPENING
C.T.	CERAMIC TILE	INSUL.	INSULATION	SCHED.	SCHEDULE
CLG.	CEILING	INT.	INTERIOR	SEC.	SECTION
CLOS.	CLOSET	JT.	JOINT	S.F.	SQUARE FOOT
CM	CONSTRUCTION MGR.	KIT.	KITCHEN	SHT.	SHEET
CMU	CONC. MASONRY UNIT	LAM.	LAMINATE	SIM.	SIMILAR
COL.	COLUMN	LAV.	LAVATORY	SPEC.	SPECIFICATION
COMBO	DUNKIN'/BASKIN	LT.	LIGHT	SQ.	SQUARE
	DUNKIN'/TOGO'S	MAS.	MASONRY	S.S.	STAINLESS STEEL
	TOGO'S/BASKIN	MAX.	MAXIMUM	STD.	STANDARD
CONC.	CONCRETE	MECH.	MECHANICAL	STL.	STEEL
CONT.	CONTINUOUS	MTL.	METAL	STRUCT.	STRUCTURAL
CONST.	CONSTRUCTION	MFR.	MANUFACTURER	SUSP.	SUSPENDED
C.S.	CONSTRUCTION SPECIFICATIONS	MIN.	MINIMUM	TEL.	TELEPHONE
D.B.I.	DUNKIN' BRANDS INC.	MISC.	MISCELLANEOUS	THK.	THICK
DEPT.	DEPARTMENT	M.O.	MASONRY OPENING	THRU	THROUGH
DTL.	DETAIL	MTD.	MOUNTED	T.O.P.	TOP OF PLATE
D.F.	DRINKING FOUNTAIN	N.I.C.	NOT IN CONTRACT	T.O.S.	TOP OF STEEL
DIA.	DIAMETER	NO.	NUMBER	T.O.SL.	TOP OF SLAB
DIM.	DIMENSION	NOM.	NOMINAL	TRT.	TREATED
DISP.	DISPENSER	N.T.S.	NOT TO SCALE	TYP.	TYPICAL
DN.	DOWN	O.A.	OVERALL	V.C.B.	VINYL COMPOSITION BASE
DR.	DOOR	O.C.	ON CENTER	V.C.T.	VINYL COMPOSITION TILE
D.S.	DOWN SPOUT	O.D.	OUTSIDE DIAMETER	VERT.	VERTICAL
DWG.	DRAWING	OPNG.	OPENING	V.I.F.	VERIFY IN FIELD
EA.	EACH	OPT.	OPTIONAL	V.W.C.	VINYL WALL COVERING
EL.	ELEVATION	PL.	PLATE	W/	WITH
ELEC.	ELECTRICAL	P.LAM.	PLASTIC LAMINATE	W.C.	WATER CLOSET
EQ.	EQUAL	PLUMB.	PLUMBING	WD.	WOOD
EQUIP.	EQUIPMENT	PLYWD.	PLYWOOD	W/O	WITHOUT
EXIST.	EXISTING	PR.	PAIR	WP.	WATERPROOFING
EXT.	EXTERIOR	PROP.	PROPERTY	WT.	WEIGHT
				WWM.	WELDED WIRE MESH

INDEX OF DRAWINGS

T1.0	TITLE SHEET/ ARCHITECTURAL DATA
GS1.0	GENERAL SPECIFICATIONS-ARCHITECTURAL
GS1.1	GENERAL SPECIFICATIONS-MECHANICAL,ELECTRICAL & PLUMBING
SP1.0	ARCHITECTURAL SITE PLAN & BUILDING SIGNAGE DETAILS

ARCHITECTURAL

D1.0	DEMOLITION PLAN
A1.0	PARTITION PLAN & WALL TYPES
A1.1	FLOOR PLAN & NOTES
A1.2	ENLARGED RESTROOM PLAN
A2.0	REFLECTED CEILING PLAN & NOTES
A3.0	FINISHED FLOOR PLAN & SCHEDULE
A4.0	ROOF PLAN
A5.0	EXTERIOR ELEVATIONS
A5.1	EXTERIOR ELEVATIONS
A6.0	EXTERIOR FINISH SCHEDULE
A7.0	WALL SECTIONS
A7.1	WALL SECTIONS
A8.0	INTERIOR ELEVATIONS
A8.1	INTERIOR FINISH SCHEDULE
K1.0	EQUIPMENT PLAN & WALK-IN BOX SCHEDULE
K1.1	EQUIPMENT SCHEDULE

HVAC

H1.1	HVAC OVERVIEW PLAN
H2.1	HVAC PLANS AND NOTES
H3.1	HVAC DETAILS
H3.2	HVAC HOOD DETAILS & SCHEDULE
H4.1	HVAC SCHEDULES
H5.1	GENERAL SPECIFICATIONS
H6.1	HVAC SPECIFICATIONS

ELECTRICAL

E1.1	ELECTRICAL OVERVIEW
E1.2	ELECTRICAL NOTES AND DETAILS
E2.1	ELECTRICAL POWER PLAN AND DETAILS
E2.2	ELECTRICAL HVAC POWER PLAN & DETAILS
E3.1	ELECTRICAL COMMUNICATION PLAN & DETAILS
E3.2	ELECTRICAL COMMUNICATION SCHEDULES & NOTES
E4.1	ELECTRICAL LIGHTING PLAN & DETAIL
E5.1	ELECTRICAL PANEL SCHEDULE & RISER DIAGRAM
E6.1	ELECTRICAL SPECIFCATIONS

PLUMBING

P1.1	PLUMBING OVERVIEW
P2.1	PLUMBING SANITARY, WATER, & GAS PLAN
P3.1	PLUMBING DETAILS
P4.1	WATER FILTRATION SYSTEM DIAGRAM
P5.1	PLUMBING SCHEDULES
P6.1	PLUMBING SPECS & RISER DIAGRAM

SITE/BUILDING DATA

OCCUPANCY:	A - ASSEMBLY - (DUNKIN SPACE) B - BUSINESS - (TENANT SPACE)
TYPE CONSTRUCTION:	EXISTING - NO CHANGE - 3B
PROPOSED BUILDING HEIGHT:	24'-6"
FLOOR AREA:	
TOTAL BUILDING AREA (GROSS)	EXISTING - NO CHANGE - +/-3,778 SQ.FT.
PROPOSED DUNKIN AREA (GROSS)	+/-3,182 SQ.FT.
PROPOSED TENANT SPACE AREA (GROSS)	+/-596 SQ.FT.

1. DUNKIN'

OCCUPANT LOAD:

KIT/SERVING AREA	+/-919 SF @200 SF/PER	(4)
CUSTOMER SALES AREA	+/-923 SF @15 SF/PER	(62)
TOTAL OCCUPANT LOAD		(66) OCCUPANTS

MEANS OF EGRESS: (3)

WIDTH OF EXITS: 36" X .2"/OCCUPANT = .15" (32 INCHES MINIMUM)

NO SEATING PROPOSED

2. TRAINING ROOM SPACE

OCCUPANT LOAD:

BUSINESS AREA	+/-596 SF @100 SF/PER	(5)
TOTAL OCCUPANT LOAD		(5) OCCUPANTS

WIDTH OF EXITS: 36" X .2"/OCCUPANT = .12" (32 INCHES MIN)

BUILDING IS NOT SPRINKLERED

DESIGN CODES

CODES USED:	OHIO UNIFIED CONSTRUCTION CODES
BUILDING CODE	2018 INTERNATIONAL BUILDING CODE
MECHANICAL CODE	2018 INTERNATIONAL MECHANICAL CODE
PLUMBING CODE	2018 ITNERNATIONAL PLUMBING CODE
ELECTRIC CODE	2017 NATIONAL ELECTRIC CODE
FUEL / GAS CODE	2018 INTERNATIONAL FUEL GAS CODE
FIRE CODE	2018 INTERNATIONAL FIRE CODE
ACCESSIBILITY	ICC/ANSI A117.1-2009

ALBERT TAUS & ASSOCIATES, ARCHITECTS
ALBERT TAUS, AIA, ARCHITECT
ARCHITECTURE PLANNING INTERIOR DESIGN ENGINEERING
PHILADELPHIA, PA
PHONE: (215) 888-2518 FAX: (215) 888-7388
atausarchitects.com

THESE PLANS ARE THE PROPERTY OF ALBERT TAUS & ASSOCIATES, ARCHITECTS, AND ARE NOT TO BE USED WITHOUT THE EXPRESSED WRITTEN PERMISSION OR CONSENT OF ALBERT A. TAUS, R.A., A.I.A.

STATE OF MISSOURI
ALBERT A. TAUS
NUMBER
A-2015032715
ARCHITECT

MO# A-2015032715

SIGNATURE

DOCUMENTS PREPARED FOR
DDJ21DOUGLAS, LLC
C/O: MR. HOSSAM SHAHIN
109 E. HALE LAKE RD
WARRENSBURG, MO 64093

ATA200602.10

	DATE	04/29/21
	SCALE	AS NOTED
	DRAWN	GR
	CKD	DJK
	APPD	AAT

NO	DESCRIPTION	DATE
1		
2		
3		
4		
5		
6		

REVISIONS

THESE PLANS ARE CONFIDENTIAL PROPERTY OF DUNKIN' BRANDS INC. UNDER RESTRICTED ACCESS.

PROPOSED PROJECT
DUNKIN'
WITH DRIVE THRU
1100 NE DOUGLAS STREET
LEE'S SUMMIT MO. 64086
NEXT GEN (COOL PALAETTE)

COVER SHEET

DUNKIN' BRANDS
[eat drink think]

T1.0

DD Green Award Submission Form

DD Green

dunkin' brands

DD GREEN STRUCTURE

DD Green Strategies will be selected and implemented by the Franchisee, Construction Manager and Architect during the Planning, Design and Construction of a project

The project Contractor will be required to follow all selected DD Green Strategies during Construction.

Once all Strategies are finalized and implemented, a Final DD Green Checklist will be signed and confirmed by the CM and Franchisee, allowing for final DD Green Achievement to be validated and confirmed at Substantial Completion. The DD Green Achievement will then be recognized/celebrated at the restaurant opening with presentation of the DD Green Plaque.

STEPS TO ACHIEVE DD GREEN

STEP 1 – Pre-Planning: CM, Architect and Franchisee meet during the planning stage to determine IF DD GREEN will be desired and at what level. The strategies and commitments of DD Green will be discussed and selected to achieve the level of sustainability and efficiency desired by the team.

STEP 2 - Documentation: Architect incorporates into his drawings the Strategies required by DD Green, as well as the selected Optional Strategies, for Certification. Franchisee makes preparation for the Operational components.

STEP 3 – Implementation: Architect, CM, Franchisee and Contractor ensure that all DD Green Strategies chosen at the Pre-Planning stage have been implemented during construction and prior to turnover.

STEP 4 - Turnover: CM completes checklist with Franchisee at Turnover of Construction and verifies rating of certification. CM, Architect and Franchisee sign off on Final DD Green Checklist.

STEP 5 – Notification of Certification Achievement: CM sends a copy of the checklist for Final DD Green Achievement confirmation and approval for DD Green Plaque.

STEP 6 – Plaque Ceremony: Franchisee receives plaque and letter from Dunkin' Leadership, and mounts plaque in a prominent place in the restaurant to ensure visibility and recognition.

DD GREEN ACHIEVEMENT CHECKLIST

	POSSIBLE POINTS	SCORE
Site Development		
Site Protection	Required	*
Regionally Friendly Landscaping	Required	*
Alternative Transit Options	2 Strategy Points	
Efficient Irrigation Design	2 Strategy Points	
Storm water Management	2 Strategy Points	
ECO Parking Lot	1 Strategy Point	
Cool Roof	1 Strategy Point	
Energy Efficient Frames	1 Strategy Point	
Store Efficiency		
Led Light Fixtures	Required	*
Highly Efficient HVAC Systems	Required	*
Low Flow Fixtures	Required	*
Highly Efficient Water Fixtures	2 Strategy Points	
LED Exterior Light Fixtures	2 Strategy Points	
Non Potable Water Use	2 Strategy Points	
Demand Control Ventilation	1 Strategy Point	
Variable Speed Drive for HVAC	1 Strategy Point	
Exhaust Controls	1 Strategy Point	
Effective Lighting Controls	1 Strategy Point	
Walk in Fridge Addition	1 Strategy Point	
Healthy Indoors		
Indoor Air Quality Management	Required	*
Zero-Voc Paint Use	Required	*
Recycled Material Use	2 Strategy Point	
Natural Light Intergration	2 Strategy Points	
Solar Shade Use	1 Strategy Point	
Sustainable Operations		
Construction Waste Recycling	Required	*
Building Operations Training	Required	*
DD Green Commitment	Required	*
Building Energy Monitoring	2 Strategy Points	
Recycling Program Development	2 Strategy Points	
Food Waste Reduction	1 Strategy Point	
Waste Water Reduction	2 Strategy Point	
Innovation and Community		
Community Outreach	Required	*
Electric Car Charging Station	2 Strategy Points	
Renewable Energy Use	2 Strategy Points	
Exemplary Performance	1 Strategy Point	
Strategy Innovation	1 Strategy Point	
DD GREEN ACHIEVEMENT LEVELS DD GREEN – All Requirements Met plus **12** additional Strategy Points DD GREEN ELITE– All Requirements Met plus **20** additional Strategy Points		0

Name of Submittee:

xxxx

Submittee Email:

xxxxx

PC Number:

xxxxx

Franchisee Name:

xxxx

Franchisee Business Name:

Business Address:

New or Remodel Site:

Signatures

I agree that I will be held as legally bound, obligated, and responsible for any submission I make using the DD Green Award Submission System as I would be by making such submission in hardcopy form with my handwritten or typed signature as certification.

Type / Sign name here

Construction Manager

Type / Sign name here

Architect

Type / Sign name here

Franchisee

Additional Comments:

xxxxxx

XXXX

RESPONSIBILITY MATRIX

A. The GC is responsible for purchasing and installing, at GC's expense, everything shown or referenced in the Contract Documents, except for the items specifically set forth below as Exceptions to the GC's Overall Responsibility.
The Contract Documents, shall include the following: the plans, the specifications, the responsibility matrix, change orders, modifications to the contract, requests for information, field instructions, and any other item as set forth in the Agreement Between the Contractor and Owner.
All items not indicated on the responsibility matrix are the responsibility of the GC to furnish and install.

B. The GC is responsible for all permits and licenses of any nature required to construct the project or to secure a Certificate of Occupancy, except for impact fees and the general business license.

II. Exceptions to GC's Overall Responsibility

1

FINISH MATERIALS

CODE	MATERIAL	Furnished	MEP Rough-Ins	Install	Final Connections
	FLOOR MATERIALS				
FL-01	FLOOR TILE	GC	N/A	GC	N/A
FT-01 (ALT)	FLOOR TILE	GC	N/A	GC	N/A
FT-02	QUARRY TILE	GC	N/A	GC	N/A
FTB-01 COVE	FLOOR TILE BASE	GC	N/A	GC	N/A
FTB-01 CUT	FLOOR TILE BASE	GC	N/A	GC	N/A
FTB-01 ALT COVE	FLOOR TILE BASE	GC	N/A	GC	N/A
FTB-02 COVE	FLOOR TILE BASE	GC	N/A	GC	N/A
G-01	GROUT	GC	N/A	GC	N/A
	WALL FINISH MATERIALS				
P-1	PAINT	GC	N/A	GC	N/A
P-2	PAINT	GC	N/A	GC	N/A
PL-WP	WALL PROTECTION	GC	N/A	GC	N/A
SF-1	SPECIAL FINISH	GC	N/A	GC	N/A
SF-2	SPECIAL FINISH	GC	N/A	GC	N/A
SF-3	SPECIAL FINISH	GC	N/A	GC	N/A
SF-4	SPECIAL FINISH	GC	N/A	GC	N/A
WD-1	WOOD VENEER LAMINATE	GC	N/A	GC	N/A
WT-1	TILE	GC	N/A	GC	N/A
WT-2	TILE	GC	N/A	GC	N/A
WT-3	TILE	GC	N/A	GC	N/A
WT-4	TILE	GC	N/A	GC	N/A
FRP-01	FIBERGLASS REINFORCED PANELS	GC	N/A	GC	N/A
FRP-01 (ALT)	FIBERGLASS REINFORCED PANELS	GC	N/A	GC	N/A
G-03	GROUT	GC	N/A	GC	N/A
G-04	GROUT	GC	N/A	GC	N/A
G-05	GROUT	GC	N/A	GC	N/A
	CEILING MATERIALS				
CT-01	GENERAL CEILING TILE	GC	N/A	GC	N/A
CT-03	VINYL CEILING TILE	GC	N/A	GC	N/A
CT-04	CEILING GRID SYSTEM	GC	N/A	GC	N/A
ETR-CG	ETR CEILING GRID	GC	N/A	GC	N/A
ETR-GB	ETR GYPSUM BOARD	GC	N/A	GC	N/A
P-1	PAINT	GC	N/A	GC	N/A
P-2	PAINT	GC	N/A	GC	N/A
PX-30	PAINTED GYP. BD	GC	N/A	GC	N/A
	GRAPHICS				
	INTERIOR GRAPHICS (NOT SIGNAGE)	GC	N/A	GC	N/A
	EXTERIOR/INTERIOR SIGNAGE	OWNER	GC	OWNER	GC
	EXTERIOR GRAPHICS	OWNER	N/A	OWNER	N/A
	DRIVE-THRU SIGNAGE	OWNER	GC	OWNER	GC
	DRIVE-THRU SIGNAGE STRUCTURE AND SUPPORT	OWNER	GC	OWNER	N/A
	EXPANSION JOINT				
	FLOOR EXPANSION JOINT SEALANT	GC	N/A	GC	N/A

PLUMBING FIXTURES AND RESTROOM ACCESSORIES

ITEM #	ITEM	Furnished	MEP Rough-Ins	Install	Final Connections
A	GRAB BARS	GC	N/A	GC	N/A
B	TOILET TISSUE DISPENSER	GC	N/A	GC	N/A
C	COAT HOOK	GC	N/A	GC	N/A
D	SOAP DISPENSER	GC	N/A	GC	N/A
E	HAND DRYER	GC	GC	GC	GC
F	MIRROR	GC	N/A	GC	N/A
G	CHEMICAL DISPENSER	GC	N/A	GC	N/A
H	WASTE RECEPTACLE	GC	N/A	GC	N/A
I	BABY CHANGING STATION	GC	N/A	GC	N/A
J	SWING-UP GRAB BAR	GC	N/A	GC	N/A
K	SANITARY NAPKIN DISPOSAL	GC	N/A	GC	N/A
L	SEAT COVER DISPENSER (OPTIONAL)	GC	N/A	GC	N/A
M	WALL SHELF	GC	N/A	GC	N/A
	BLOCKING FOR ALL ACCESSORIES	GC	N/A	GC	N/A

DOORS AND HARDWARE

NUMBER	LOCATION/ITEM	Furnished	MEP Rough-Ins	Install	Final Connections
101	ENTRY	GC	N/A	GC	N/A
102	WOMENS TOILET	GC	N/A	GC	N/A
103	MENS TOILET	GC	N/A	GC	N/A
104	OFFICE	GC	N/A	GC	N/A
105	REAR	GC	N/A	GC	N/A
	DOOR HARDWARE (SEE SCHEDULE THIS DWG)	GC	N/A	GC	N/A

LIGHT FIXTURES (ALL TO BE PURCHASED THROUGH NATIONAL ACCOUNT VENDOR)

TAG	DESCRIPTION	Furnished	MEP Rough-Ins	Install	Final Connections
	INTERIOR				
A	WALL WASH FIXTURE	GC	GC	GC	GC
BL	PROVIDED BY WALK-IN BOX MANUFACTURER	GC	GC	GC	GC
C	TRACK LIGHT	GC	GC	GC	GC
EBU-W	ULTRA COMPACT EMERGENCY LED	GC	GC	GC	GC
EBU-B	ULTRA COMPACT EMERGENCY LED	GC	GC	GC	GC
EMR	EXTERIOR COMBO LED REMOTE	GC	GC	GC	GC
WP	FLOOD LIGHT	GC	GC	GC	GC
EWS-1	WALL PACK	GC	GC	GC	GC
EWS-2	WALL PACK	GC	GC	GC	GC
EXI	COMBO EXIT LIGHT	GC	GC	GC	GC
HL	SURFACE JELLY JAR LIGHT	GC	GC	GC	GC
LED 2	EXTERIOR RECESSED LIGHT FIXTURE	GC	GC	GC	GC
LED 11	EXTERIOR LIGHT FIXTURE	GC	GC	GC	GC
LED 12	EXTERIOR LIGHT FIXTURE	GC	GC	GC	GC
OC	WALL MOUNTED OCCUPANCY SENSOR	GC	GC	GC	GC
P1	8' SUSPENDED LIGHT FIXTURE	GC	GC	GC	GC
P2	4' SUSPENDED LIGHT FIXTURE	GC	GC	GC	GC
P3	PENDANT CHANDELIER	GC	GC	GC	GC
PKL3	PARKING LOT LIGHTING	GC	GC	GC	GC
PKL4	PARKING LOT LIGHTING	GC	GC	GC	GC
R1	RECESSED LED LIGHT FIXTURE	GC	GC	GC	GC
LED 6	2X4 RECESSED LIGHT FIXTURE	GC	GC	GC	GC
G	30 W LED WALL PACK	GC	GC	GC	GC

MUSIC SYSTEM

	ITEM	Furnished	MEP Rough-Ins	Install	Final Connections
	STEREO RECEIVER	OWNER	GC	GC	GC
	SPEAKERS	OWNER	GC	GC	GC
	SPEAKER WIRE	OWNER	GC	GC	GC

ALBERT TAUS & ASSOCIATES, ARCHITECTS
ALBERT TAUS, AIA, ARCHITECT
ARCHITECTURE PLANNING INTERIOR DESIGN ENGINEERING
P H I L L I P A
PHONE: (215) 888-2518 FAX: (215) 888-7388
atausarchitects.com

THESE PLANS ARE THE PROPERTY OF ALBERT TAUS & ASSOCIATES, ARCHITECTS, AND ARE NOT TO BE USED WITHOUT THE EXPRESSED WRITTEN PERMISSION OR CONSENT OF ALBERT A. TAUS, R.A., A.I.A.

STATE OF MISSOURI
ALBERT A. TAUS
NUMBER
A-2015032715
ARCHITECT

MO# A-2015032715 SIGNATURE

DOCUMENTS PREPARED FOR
DDJ21DOUGLAS, LLC
C/O: MR HOSSAM SHAHIN
109 E. HALE LAKE RD
WARRENSBURG, MO 64093

ATA200602.10

	DATE	SCALE	DRAWN	CKD	APPD
	04/29/21	AS NOTED	LJ	DJK	AAT

NO	DESCRIPTION	DATE
6		
5		
4		
3		
2		
1		
–		

REVISIONS

THESE PLANS ARE CONFIDENTIAL PROPERTY OF DUNKIN' BRANDS INC. UNDER RESTRICTED ACCESS.

PROPOSED PROJECT
DUNKIN' WITH DRIVE THRU
1100 NE DOUGLAS STREET
LEE'S SUMMIT MO. 64086
NEXT GEN (COOL PALAETTE)

RESPONSIBILITY MATRIX

DUNKIN' BRANDS [eat drink run]

T-1.1

ARCHITECTURAL GENERAL NOTES

A-01 GENERAL CONDITIONS OF THE CONTRACT FOR CONSTRUCTION AIA DOCUMENT A201, LATEST EDITION, IS HEREBY MADE A PART OF THIS SPECIFICATION, AS IF BOUND HEREIN AND SHALL APPLY TO ALL DIVISIONS AS THOUGH COPIED IN EACH.

A-02 CONTRACTOR IS RESPONSIBLE FOR MEANS AND METHODS OF CONSTRUCTION TO ENSURE THE SAFETY OF THE BUILDING UNTIL STRUCTURAL SYSTEM IS COMPLETED. THIS INCLUDES, BUT IS NOT LIMITED TO, THE ADDITION OF WHATEVER TEMPORARY BRACING SHORING, GUY WIRES OR TIE-DOWNS THAT MAY BE NECESSARY. SUCH MATERIAL SHALL BE REMOVED.

A-03 GENERAL AND ALL SUB-CONTRACTORS SHALL BE RESPONSIBLE FOR WORK SHOWN ON ALL DRAWINGS AND NOT NECESSARILY SHOWN ON THE DRAWINGS OF THEIR TRADE. IT IS RECOMMENDED THAT ALL CONTRACTORS CHECK ALL DRAWINGS FOR THEIR RESPECTIVE WORK AND VISIT THE SITE TO CHECK ALL JOB CONDITIONS.

A-04 ALL CONTRACTORS MUST VERIFY ALL DIMENSIONS AT SITE BEFORE PROCEEDING WITH ANY WORK AND SHALL BE RESPONSIBLE FOR ANY DISCREPANCIES BETWEEN DRAWINGS AND ACTUAL FIELD CONDITIONS.

A-05 ALL WORK UNDER THIS PROJECT BY ALL CONTRACTORS SHALL BE PERFORMED IN AN UP TO DATE, PROPER CONSTRUCTION LIKE MANNER IN ACCORDANCE TO THEIR RESPECTIVE TRADES, INCLUDING MANUFACTURERS SPECIFICATIONS, WHERE APPROPRIATE.

A-06 ALL CONTRACTOR SUBSTITUTIONS OF FINISH MATERIALS MUST BE APPROVED BY THE ARCHITECT IN WRITING. GENERAL CONTRACTOR IS RESPONSIBLE FOR SUBMITTING SAMPLES AND OR CUT SHEETS, FOR NEW MATERIALS.

A-07 THE CONTRACTOR SHALL ENDEAVOR NOT TO DISTURB OR INTERFERE WITH ACCESS TO ADJACENT PROPERTIES BORDERING ALL SIDES OF THE PROJECT SITE. ALL PROJECT OPERATIONS SHALL BE CONFINED TO THE PROJECT SITE.

A-08 WORK SHALL NOT COMMENCE UNTIL AN APPROVAL HAS BEEN ATTAINED FROM THE LANDLORD IF ANY, AND A BUILDING PERMIT HAS BEEN SECURED.

A-09 ALL WORK SHALL CONFORM WITH THE LANDLORD'S/TENANT CRITERIA SUPPLIED BY THE LANDLORD IF ANY, AND MADE PART OF THE TENANT'S LEASE. GENERAL CONTRACTOR IS TO OBTAIN A COPY OF CRITERIA FROM TENANT.

A-10 ALL WORK SHALL BE EXECUTED ACCORDING TO THE TRUE INTENT, SPIRIT AND MEANING OF PLANS AND SPECIFICATIONS. IF THE CONTRACTOR DISCOVERS ANY OMISSION, ERROR OR CONFLICT IN PLANS AND/OR SPECIFICATIONS, HE SHALL REQUEST INTERPRETATION FROM THE ARCHITECT BEFORE SIGNING THE NTRACT. OTHERWISE, THE CONTRACTOR SHALL SUPPLY, AT HIS OWN EXPENSE, THE PROPER MATERIALS AND LABOR TO MAKE GOOD ANY DAMAGE TO OR DEFECT IN HIS WORK CAUSED BY SUCH OMISSION, ERROR AND/OR CONFLICT.

A-11 COMPLETE MASTER SET OF CONSTRUCTION DOCUMENTS, STAPLED AND CONNECTED ON A STICK, IS TO BE ON HAND AT A DESIGNATED LOCATION ON SITE AT ALL TIMES (WITHOUT EXCUSES) FOR REFERENCE USE BY THE OWNER, CONTRACTOR, SUBCONTRACTORS AND THE ARCHITECT.

A-12 SHOP DRAWINGS SHALL BE SUBMITTED TO ARCHITECT, AND THE CLIENT'S OF ALL CONSTRUCTION, STOREFRONT, ELECTRICAL, H.V.A.C. DUCTWORK, PLUMBING, ETC. FOR APPROVAL BEFORE ERECTION INSTALLATION OR CONSTRUCTION.

A-13 GENERAL CONTRACTOR TO PROVIDE SHOP DRAWINGS OF ALL CABINETS, COUNTERS AND FIXTURES, AS REQUIRED TO THE ARCHITECT FOR APPROVAL.

A-14 ACTUAL (NEW OR EXISTING) BUILDING CONSTRUCTION MAY VARY SLIGHTLY (AND IT MIGHT BE NECESSARY TO CHANGE) FROM WHAT IS SHOWN ON DRAWINGS AND DISCOVERED DURING CONSTRUCTION. (GENERAL) CONTRACTOR SHALL NOTIFY ARCHITECT OR ENGINEER IMMEDIATELY IF THERE ARE ANY SUCH VARIANCES OR PROBLEMS IN THE CONDITIONS BEFORE PROCEEDING WITH THE WORK.

A-15 ALL CONTRACTORS SHALL TAKE SUCH PROTECTIVE MEASURES AND PRECAUTIONS AS NECESSARY AND REQUIRED TO PREVENT ANY INJURY OR ACCIDENTS TO WORKMEN, RESIDENTS OR ANY PASSERS-BY. PROVIDE GUARD RAILS, FENCES, PLANKING, LIGHTING, SIGNS ETC., IN RESPECT WITH THE PARTICULAR CONDITIONS AND IN ACCORDANCE WITH O.S.H.A. SAFETY REQUIREMENTS AND REGULATIONS.

A-16 BARRICADES WHERE NECESSARY OR IN MALLS, ETC.: ALL STORE FRONTS MUST BE TEMPORARILY BARRICADED DURING CONSTRUCTION. THE DUST TIGHT BARRICADE MUST BE CONSTRUCTED OF 3 5/8" METAL STUDS, 16" ON CENTER WITH A MINIMUM 1/2" DRY WALL ON THE MALL SIDE OF THE PARTITION. THE EXTERIOR OF THE PARTITION MUST BE TAPED, SPACKLED, SANDED AND PAINTED WITHIN 48 HOURS OF INSTALLATION. COLOR SPECIFIED BY LANDLORD OR OWNER. THE PARTITIONS MUST HAVE PLASTIC AT THE TOP TO CONTROL DUST IF PARTITION IS NOT FLOOR TO CEILING. THE MINIMUM BARRICADE HEIGHT IS 12 FEET. IF THE LOCATION HAS A REAR DOOR, CONTRACTORS ARE NOT PERMITTED TO CONSTRUCT A DOOR IN THE BARRICADE.

A) BOTTOM PLATES - SHALL BE PINNED TO THE FLOOR BY NAILING INTO GROUT JOINTS.

B) COORDINATION - THE CONTRACTOR SHALL COORDINATE THE LOCATIONS OF ALL DUST PARTITION BARRICADES WITH THE MALL MANAGEMENT OR OWNER.

A-17 THE CONTRACTOR SHALL COORDINATE, PROVIDE AND INSTALL TEMPORARY PROTECTION FOR THE EXTERIORS AND FACADES OF ADJACENT PROPERTIES THROUGHOUT THE DURATION OF THE PROJECT. THE CONTRACTOR SHALL REPAIR ANY DAMAGE TO ADJACENT PROPERTIES RESULTING FROM CONSTRUCTION OPERATIONS AT NO COST TO THE OWNER/TENANT..

A-18 CONTRACTOR SHALL PHASE EXTERIOR WINDOW, DOOR AND HARDWARE REPLACEMENTS IN A MANNER THAT, AT THE END OF EACH WORK DAY, THE PROPERTY IS ENCLOSED, SAFE AND SECURE OVERNIGHT. IT IS THE CONTRACTOR'S RESPONSIBILITY TO LEAVE THE SITE WITH SUBSTANTIAL, SECURE TEMPORARY ENCLOSURES TO PROTECT PREMISES OVERNIGHT.

A-19 NO MATERIAL SHALL BE PLACED OR ANY DISTURBANCE PERMITTED BEYOND THE PROJECT PROPERTY LINE OR RIGHT OF WAY WITHOUT THE WRITTEN PERMISSION OF THE OWNER/LANDLORD DIRECTLY INVOLVED.

A-20 PROTECT ALL WORK-IN PROGRESS AND NEW OPENINGS WITH MOISTURE PROTECTION IN THE EVENT OR FORECAST OF RAIN. SECURE VINYL SHEETING IN-PLACE TO PROTECT PREMISES WHILE ON AND OFF SITE.

A-21 ANY APPLIANCES, EQUIPMENT, OR MATERIALS OBVIOUSLY A PART OF THE WORK AND NECESSARY FOR ITS PROPER OPERATION, OR CONSTRUCTION, ALTHOUGH NOT SPECIFICALLY MENTIONED HEREIN, SHALL BE FURNISHED AND INSTALLED AS IF CALLED FOR IN DETAIL. CONTRACTOR SHALL SUPPLY ALL NAILERS AND GROUNDS FOR FIXTURES FITTINGS, AND EQUIPMENT AS REQUIRED.

A-22 THE GENERAL CONTRACTOR SHALL SUBMIT A LIST OF ALL SUB- CONTRACTORS TO THE OWNER/ TENANT AND ARCHITECT PRIOR TO CONSTRUCTION. THE OWNER/TENANT AND ARCHITECT RESERVES THE RIGHT TO REJECT ANY SUB-CONTRACTOR SUBMITTED BY THE GENERAL CONTRACTOR.

THE GENERAL CONTRACTOR SHALL NOT SUBSTITUTE ANY NAMED SUB CONTRACTOR WITHOUT WRITTEN PERMISSION OF THE OWNER/TENANT OR HIS ARCHITECT.

A-23 THE CONTRACTOR UPON COMPLETION OF CONSTRUCTION, MUST PROVIDE THE OWNER/TENANT WITH A LIST OF ALL SUB-CONTRACTORS± (NAME OF COMPANY, ADDRESS AND PHONE NUMBER) ALONG WITH ANY AND ALL INSTRUCTION, BOOKLETS OR PAMPHLETS AND THE RESPECTIVE MANUFACTURER GUARANTEES OR WARRANTIES ASSOCIATES WITH ALL APPLIANCES OR EQUIPMENT.

A-24 PRIOR TO COMMENCEMENT OF WORK, CONTRACTOR SHALL CONTACT AND MEET WITH TENANT'S/CLIENT'S FIELD REPRESENTATIVE FOR A PRECONSTRUCTION MEETING. AT WHICH TIME, HE WILL PRESENT A LIST OF THE NAMES, ADDRESSES AND TELEPHONE NUMBERS OF THE SUB-CONTRACTORS TO BE USED ON THIS PROJECT.

A-25 THE CONTRACTOR SHALL COORDINATE AND SEEK THE OWNER'S/ TENANT'S APPROVAL FOR MATERIAL STORAGE, DELIVERY, AND "SAFE" LOCATIONS ON-SITE FOR FINISH PRODUCTS, AND ASSUME ALL RESPONSIBILITY OF SAME.

A-26 THE ARCHITECT/ENGINEER/CLIENT'S FIELD REPRESENTATIVE SHALL HAVE THE AUTHORITY TO REJECT ANY WORK OR CONSTRUCTION THAT IS NOT SATISFACTORY (PROPER CONSTRUCTION LIKE MANNER) OR IN CONFORMANCE WITH THE CONSTRUCTION DOCUMENTS AND SPECIFICATIONS.

A-27 ALL MATERIALS, EQUIPMENT, TOOLS, CONSTRUCTION EQUIPMENT, TEMPORARY AND PERMANENT UTILITIES (HEAT, ELECTRIC, WATER, SANITARY PLUMBING AND TELEPHONE) TRANSPORTATION, AND OTHER FACILITIES INCLUDING INSURANCE (LIABILITY, WORKMAN'S COMPENSATION, AUTOMOBILE, ETC.) NECESSARY FOR THE EXECUTION AND COMPLETION OF THE PROJECT, SHALL BE FURNISHED BY THE GENERAL AND HIS SUB-CONTRACTOR(S).

A-28 THE EQUIPMENT SUPPLIER CONTRACTOR IS AND WILL BE RESPONSIBLE FOR THE UNLOADING AND TAKING DELIVERY OF THE EQUIPMENT. IT IS ALSO THE RESPONSIBILITY OF THE SUPPLIER TO MAKE ALL NECESSARY INSTALLATION OF THIS EQUIPMENT AND DISPOSE ALL AND ANY TRASH OR RUBBISH IN THE DUMPSTER PROVIDED BY THE GENERAL CONTRACTOR FOR THIS PROJECT.

A-29 ALL CONTRACTORS SHALL BE BONDABLE, LICENSED CONTRACTORS IN THE RESPECTIVE MUNICIPALITY, POSSESSING GOOD LABOR RELATIONS AND MUST BE CAPABLE OF PERFORMING QUALITY WORKMANSHIP IN HARMONY WITH OTHER CONTRACTORS WORKING ON THIS PROJECT.

A-30 THE GENERAL CONTRACTOR AND SUB CONTRACTOR(S) MUST PROVIDE EVIDENCE AND MAINTAIN CASUALTY, LIABILITY, BUILDER'S RISK, AUTOMOBILE TO THE OWNER/ TENANT INCLUDING WORKMAN'S COMPENSATION INSURANCE (IN AMOUNTS AGREEABLE) TO OWNER/ TENANT. THE POLICIES MUST NAME OWNER/ TENANT AND MORTGAGOR AS ADDITIONAL INSUREDS. THE POLICY MUST CONTAIN A 30-DAY TERMINATION NOTICE!

A-31 THE OWNER/ TENANT, AT HIS DISCRETION, MAY REQUIRE THE GENERAL CONTRACTOR TO OBTAIN A PERFORMANCE AND PAYMENT BOND IN THE AMOUNT OF ONE HUNDRED PERCENT (100%) OF THE CONTRACT AMOUNT. THE COST OF THIS BOND, IF REQUIRED, WILL BE PAID BY THE OWNER/TENANT.

A-32 CONTRACTOR SHALL BE RESPONSIBLE FOR DAILY REMOVAL OF TRASH, RUBBISH AND SURPLUS MATERIALS RESULTING FROM CONSTRUCTION AND KEEP CONSTRUCTION SITE CLEAN.

A-33 CONTRACTOR SHALL REMOVE AND DISPOSE OF ALL DEMOLISHED MATERIALS, DEBRIS, TRASH, GARBAGE, ETC. OFF SITE IN ACCORDANCE WITH CITY AND LOCAL AUTHORITIES AND REGULATIONS.

A-34 FINAL CLEAN-UP SHALL BE PART OF THIS PROJECT± MAKING AREA OF CONSTRUCTION, READY FOR OCCUPANCY OR USE AND OBTAINING STATEMENT OF OCCUPANCY, OR FINAL APPROVAL OF LOCAL BUILDING/HEALTH DEPARTMENT AND LABOR AND INDUSTRY OFFICIAL, PRIOR TO AREA BEING CLASSIFIED AS SUBSTANTIALLY COMPLETE.

A-35 CONTRACTOR AT TIME OF FINAL PAYMENT OR AT "SUBSTANTIAL COMPLETION", WHICH WILL BE CONSIDERED REACHED WHEN A "STATEMENT OF OCCUPANCY" IS OBTAINED FROM THE LOCAL BUILDING/HEALTH DEPARTMENT OR LABOR AND INDUSTRY AUTHORITIES, WILL PROVIDE "RELEASE OF LIENS" FROM ALL HIS SUB CONTRACTORS AND HIMSELF LESS THE PERCENT OF RETAINAGE.

A-36 THE GENERAL AND/OR ELECTRICAL CONTRACTOR SHALL PROVIDE NECESSARY SMOKE AND HEAT DETECTORS, ALONG WITH FIRE ALARM BELLS, FIRE EXTINGUISHERS, FIRE EXIT SIGNS AND EMERGENCY LIGHTS, PER LOCAL CODES, AS INDICATED ON CONSTRUCTION DOCUMENTS AND APPROVED BUILDING PERMIT PLANS.

A-37 IT IS RECOMMENDED THAT ANY CONTRACTS BETWEEN THE OWNER/ TENANT AND THE GENERAL CONTRACTOR(S) BE ON STANDARD AGREEMENT A.I.A. FORMS. THE FORMS MAY BE OBTAINED AT ANY LOCAL AMERICAN INSTITUTE OF ARCHITECTS OFFICE OR AT THE OFFICE OF ALBERT TAUS & ASSOCIATES, A.I.A., ARCHITECTS.

A-38 CONTRACTOR IS TO CONSTRUCT BUILDING IN ACCORDANCE WITH LOCAL BUILDING CODES, AND OBTAIN ALL PERMITS (BUILDING, ELECTRICAL, H.V.A.C., PLUMBING, ETC.) REQUIRED, PAYING ALL FEES, COSTS, AND CONNECTION CHARGES, (PLUMBING, SANITARY, SEWER, GAS FUEL, ELECTRICAL, ETC.).

A-39 GENERAL CONTRACTOR SHALL APPLY FOR AND PAY FOR ALL UTILITY METERS AND ALL TEMPORARY UTILITY SERVICES, AS REQUIRED.

A-40 TELEPHONE SERVICE, WIRING AND INSTALLATION TO BE PROVIDED BY OWNER/ TENANT. CONTRACTOR TO COORDINATE AND ALLOW PHASING-IN OF THIS WORK WITH WORK REQUIRED UNDER THIS CONTRACT. SCHEDULE AND COORDINATE WITH OWNER/TENANT WELL IN ADVANCE (4 WEEKS MIN.) OF INTERIOR FRAMING COMPLETION.

A-41 ALL NEW GYPSUM BOARD WALLS TO BE TAPED, SPACKLED, AND SANDED VERY SMOOTH TO UNDERSIDE OF CEILING (OR JUST ABOVE NEW ACOUSTICAL DROP CEILING) AND PREPARED TO RECEIVE NEW FINISH. (FIRE TAPE AND/OR PATCH ALL NEW FIRE CODE GYPSUM BOARD WALLS ABOVE CEILING TO UNDERSIDE OF FLOOR OR ROOF DECK ABOVE.)

A-42 ALL WALL AREAS SURROUNDING NEW PLUMBING FIXTURES TO RECEIVE MOISTURE RESISTANT GYPSUM BOARD.

A-43 GENERAL CONTRACTOR SHALL PROVIDE ADEQUATE BLOCKING AT PARTITIONS WITH 1/2" PLYWOOD BACKER AT ALL SHELVING, THREE (3) COMPARTMENT SINK, T & S SPRAY BRACKET, POT RACK, HAND SINKS, MOP SINK FAUCETS, TIME CLOCK, GRAB BARS, LAVATORIES, HAND DRYERS, MIRRORS, PAPER TOWEL DISPENSERS, SOAP DISPENSERS AND OTHER ACCESSORIES, ETC.

A-44 ALL 3 1/2" BATT INSULATION TO HAVE MINIMUM R-13 RATING: 6" BATT TO HAVE MINIMUM R-22 RATING: 9" BATT TO HAVE MINIMUM R-30 RATING. USE FOIL OR CRAFT FACED BATT ON EXTERIOR USES.

A-45 ALL DOORS TO HAVE PROPER LOCKING HARDWARE, SCHLAGE "D" SERIES± OR EQUAL. ALL ENTRANCE DOORS TO BE PROVIDED WITH DEAD BOLT AND THUMB LATCH DEVICE, IN ADDITION TO PANIC BAR LOCKING HARDWARE, OR PUSH BAR, PULL PLATE WHERE NECESSARY. HARDWARE TO BE CLEAR OR DARK BRONZE BRUSHED ALUMINUM OR LEVER TYPE, WITH CLEAR DARK BRONZE BRUSHED ALUMINUM HINGES, TO MATCH EXISTING.

A-46 ALL NEW AND EXISTING EXTERIOR AND ENTRANCE DOORS TO HAVE METAL THRESHOLDS, COMPLYING WITH HANDICAPPED ACCESSIBLE REQUIREMENTS, AS APPLICABLE, INCLUDING WEATHER STRIPPING, HEAD, JAMB AND SILL, AS APPLICABLE.

A-47 ALL EXISTING DOORS AND FRAMES REMAINING SHALL BE REPAIRED, REFURBISHED, AND MADE OPERABLE, OR REPLACED, AS NOTED AND AS NECESSARY.

A-48 ALL NEW DOORS TO HAVE PROPER LOCKING HARDWARE. ALL EXISTING HARDWARE ON DOORS REUSING EXISTING FRAMES, TO BE REFURBISHED.

A-49 ALL NEW AND EXISTING DOORS AND FRAMES TO HAVE (SIZED AS INDICATED) PAINTED FINISH. METAL EXTERIOR MAN DOORS TO BE PAINTED (WITH RUST INHIBITIVE PAINT) ALONG WITH METAL FRAMES, INTERIOR AND EXTERIOR FACE.

A-50 PROVIDE NEW GLAZING AS NECESSARY IN WINDOWS AND OR DOORS THAT REMAIN WHERE PANES ARE MISSING, CRACKED, OR PAINTED.

A-51 ALL NEW GLAZING TO MATCH EXISTING, INCLUDING FRAMING.

A-52 ALL NEW AND EXISTING WINDOWS THROUGHOUT ARE TO BE MADE OPERABLE, (DOUBLE HUNG, HINGED, ETC.).

A-53 PROVIDE NEW WINDOWS, FRAMES AND WOOD FRAMING WHERE NECESSARY OR NOTED ON DRAWINGS TO MATCH EXISTING.

A-54 WHERE NEW WINDOWS ARE NECESSARY USE INSULATED, HIGH ENERGY COATED WINDOWS.

A-55 CONTRACTOR TO PROVIDE PROPER CAULKING TOP AND BOTTOM OF ALL PARTITIONS, AND WALLS, INCLUDING DOORS AND WINDOWS (INTERIOR AND EXTERIOR), ESPECIALLY ALL COUNTERS AND CABINETRY, WITH APPROVED HEALTH DEPARTMENT CAULKING.

A-56 WHERE DEMOLITION OCCURS PATCH, REPAIR, AND PAINT OR PREPARE AREA TO RECEIVE NEW FINISH, MATCHING ADJOINING SURFACES.

A-57 ALL EXISTING ELECTRICAL, PLUMBING AND HVAC ROUGH-IN LOCATIONS ARE TO BE RE-USED, WHERE POSSIBLE. GENERAL CONTRACTOR IS TO VERIFY AND COORDINATE LOCATIONS IN THE FIELD WITH THE DESIGN DRAWINGS, WHERE APPLICABLE.

A-58 ALL EXISTING PLUMBING, PIPING, AND RADIATORS NOT IN USE OR DAMAGED TO BE REMOVED FROM BUILDING. CAP, PER CODE, ALL ABANDONED PLUMBING LINES UNABLE TO BE REMOVED. PATCH ALL REMAINING SURFACES TO MATCH ADJOINING AREAS.

A-59 ALL EXISTING HARDWARE, WIRING, CONDUIT, FIXTURES, DUCT WORK, ETC. NOT IN USE OR SHOWN TO BE REMOVED SHALL BE ABANDONED, AND REMOVED. SAME SHOULD BE CAPPED PER CODE IF UNABLE TO BE REMOVED. PATCH AND REPAIR REMAINING AREAS DUE TO THE ABOVE DEMO, MATCH ADJACENT SURFACES.

A-60 GENERAL CONTRACTOR TO VERIFY ALL EQUIPMENT AND EQUIPMENT SPECIFICATIONS WITH THE OWNER/ TENANT/ ARCHITECT AND MANUFACTURER SPECIFICATION CUT SHEETS.

A-61 ALL EXISTING EQUIPMENT NO LONGER IN USE IN BUILDING OR CONSTRUCTION AREA (I.E. HEATING, PLUMBING, AND ELECTRIC) SHALL BE REMOVED AND/OR CAPPED PER CODE UNLESS OTHERWISE NOTED.

A-62 ALL KITCHEN AND SERVICE EQUIPMENT TO BE N.S.F. APPROVED AND INSTALLED. ALL EQUIPMENT IS TO BE INSTALLED BY THE GENERAL CONTRACTOR UNLESS OTHERWISE NOTED OR DIRECTED BY THE OWNER/ TENANT/ ARCHITECT.

A-63 ALL FLOOR MOUNTED EQUIPMENT SHALL BE SEALED TO THE FLOOR AND WALL WITH CLEAR SILICONE, OR APPROVED HEALTH DEPARTMENT CAULK, WHERE APPLICABLE OR INSTALLED ON 6" LEGS. FILL ALL GAPS OF 3/8" OR LARGER WITH ALUMINUM ANGLES PRIOR TO SEALING WITH SILICONE TO PREVENT THE SILICONE FROM DROPPING BELOW THE SURFACE OF THE COUNTER.

A-64 ALL CLOSETS, COAT ROOMS, DESIGNATED COAT AREA, TO BE PROVIDED WITH , UNLESS OTHERWISE NOTED, STAINLESS STEEL COAT ROD AND 3/4" X 18", (2) WOOD SHELF, FINISHED PLASTIC LAMINATE.

A-65 ALL STYLES, COLORS, FINISHES, AND HARDWARE SHALL BE SELECTED AND HAVE APPROVAL OF THE OWNER/ TENANT/ CLIENT'S FIELD REPRESENTATIVE OR HIS ARCHITECT BEFORE INSTALLATION.

A-66 PROVIDE NEW HANDICAPPED RESTROOMS WITH 18" X 24" MIRROR, WALL MOUNTED LIQUID SOAP DISPENSER, AND TOILET PAPER DISPENSERS. (TYPE, STYLE, AND HEIGHTS PER HANDICAPPED ACCESSIBLE CODES.)

A-67 PROVIDE ALL HAND SINKS WITH WALL HUNG LIQUID SOAP AND STAINLESS STEEL "C-TYPE" PAPER TOWEL DISPENSERS.

A-68 TOILET ROOM FLOOR TO BE WATERPROOF. CARRY WATERPROOF MEMBRANE UP WALL 6" A.F.F.

A-69 ALL FLOOR PENETRATIONS IN THE TOILET ROOM SHALL HAVE WATERTIGHT SLEEVES.

A-70 THIS CONTRACTOR IS TO PREPARE EXISTING AND OR NEW CONCRETE OR WOOD FLOORS ABSOLUTELY SMOOTH READY TO RECEIVE NEW OR FUTURE FLOOR FINISH (V.C.T., QUARRY, CERAMIC, ETC.) HAVING A MINIMUM CONSTRUCTION STANDARD DIFFERENTIAL TOLERANCE TO RECEIVE SAME.

A-71 ALL EXISTING AND NEW CONSTRUCTION, WALLS, CEILING, WOODWORK, WINDOW, AND DOOR FRAMES, ETC., TO BE SANDED VERY SMOOTH WHERE NECESSARY TO RECEIVE NEW FINISH.

A-72 ALL SURFACES INDICATED TO BE PAINTED SHALL BE PAINTED WITH (2) TWO FINISH COATS OF M.A.B. OR BENJAMIN MOORE PAINT AS SPECIFIED, OR EQUAL. ALL NEW SURFACES RECEIVING PAINT FINISH SHALL RECEIVE (1) ONE PRIMER COAT IN ADDITION TO (2) TWO FINISH COATS. COLORS TO BE SELECTED BY OWNER/ TENANT/ CLIENT'S FIELD REPRESENTATIVE OR HIS ARCHITECT. ALL METAL SURFACES TO RECEIVE PAINT FINISH USING RUST INHIBITIVE TYPE PAINT

A-73 NEW AND EXISTING STOREFRONT GLAZING MUST COMPLY WITH ALL APPLICABLE CODES AND SAFETY GLAZING STANDARDS. REPLACE EXISTING GLAZING IF NECESSARY TO MEET ABOVE CODES.

A-74 ALL NEW EXTERIOR MASONRY WALLS TO BE SEALED (WATERPROOFED) AND PROVIDED WITH BLOCK FILLER AND OR PAINTED PER M.A.B. MANUFACTURER SPECIFICATIONS.

A-75 ALL STRUCTURAL LUMBER USED IN CONNECTION WITH THIS PROJECT TO BE FIRE TREATED, WHERE NECESSARY BY CODE.

A-76 ALL LUMBER USED IN CONNECTION WITH THIS PROJECT, USED WITHIN 18" OF GRADE OR BELOW, COMING IN CONTACT WITH MOISTURE, OR IS USED FOR THE EXTERIOR, SHALL BE EXTERIOR TYPE, HIGH PRESSURE TREATED WOOD OR LUMBER.

A-77 PROVIDE 3/4" T & G PLYWOOD SUB-FLOOR IN ALL ROOMS, AS REQUIRED, OR AS SHOWN WHERE NECESSARY.

A-78 ALL MATERIALS, WHERE APPLICABLE, SHALL BEAR U.L. LABEL.

A-79 CONTRACTOR TO PERMANENTLY REMOVE ALL WEEDS AND VEGETATION FROM FRONT, SIDE AND REAR YARD AND CLEAN SAME.

A-80 ALL NEW ROOF OPENINGS AND CUTS, CLOSING OF PREVIOUS OPENINGS (TO MATCH EXISTING CONSTRUCTION) TO BE MADE BY A CERTIFIED ROOFER AND/OR LANDLORD APPROVED ROOFING CONTRACTOR KEEPING INTACT ANY ROOF WARRANTIES AND STRUCTURAL INTEGRITY OF ROOF DECK, ETC.

A-81 CONTRACTOR IN PATCHING CONCRETE SLAB DUE TO PLUMBING OR UTILITY EXCAVATION, SHALL USE READY MIX WITH A MINIMUM COMPRESSIVE STRENGTH OF 3,000 P.S.I. AT 28 DAYS WITH COMPACTED FILL AND MINIMUM 4" OF GRAVEL STONE.

A-82 SHOP DRAWINGS SHALL BE SUBMITTED TO ARCHITECT, ENGINEER, AND CLIENT'S FIELD REPRESENTATIVE OF ALL CONSTRUCTION, CARPENTRY, STRUCTURAL, STOREFRONT, H.V.A.C., ELECTRICAL, PLUMBING, ETC. FOR APPROVAL BEFORE FABRICATION, ERECTION OR CONSTRUCTION.

END OF SECTION

ALBERT TAUS
& ASSOCIATES, ARCHITECTS
ALBERT TAUS, A.I.A., ARCHITECT
ARCHITECTURE PLANNING INTERIOR DESIGN ENGINEERING
PHILADELPHIA, PA
PHONE: (215) 698-2516 FAX: (215) 698-7398
atausarchitects.com

THESE PLANS ARE THE PROPERTY OF ALBERT TAUS & ASSOCIATES, ARCHITECTS, AND ARE NOT TO BE USED WITHOUT THE EXPRESSED WRITTEN PERMISSION OR CONSENT OF ALBERT A. TAUS, R.A., A.I.A.

STATE OF MISSOURI
ALBERT A. TAUS
NUMBER
A-2015032715
ARCHITECT

MO# A-2015032715

SIGNATURE

DOCUMENTS PREPARED FOR
DDJ21DOUGLAS, LLC
C/O: MR. HOSSAM SHAHIN
109 E. HALE LAKE RD
WARRENSBURG, MO 64093

ATA200602.10

DATE	04/29/21
SCALE	AS NOTED
DRAWN	GR
CKD	DJK
APPD	AAT

NO	DESCRIPTION	DATE
6		
5		
4		
3		
2		
1		
–		

REVISIONS

PROPOSED PROJECT
DUNKIN'
WITH DRIVE THRU
1100 NE DOUGLAS STREET
LEE'S SUMMIT MO. 64086
NEXT GEN (COOL PALAETTE)
ARCHITECTURAL SPECIFICATIONS

DUNKIN' BRANDS
[eatdrinkthink]

THESE PLANS ARE CONFIDENTIAL PROPERTY OF DUNKIN' BRANDS INC. UNDER RESTRICTED ACCESS.

GS1.1

PLUMBING GENERAL NOTES

P-01 Contractor shall furnish and install all necessary labor and materials to complete installations of the plumbing systems for the building consisting of all piping connections for sanitary wastes, vents, storm water leaders and roof drains, water supply line extensions, pipe covering and insulation, valves, traps, flashing, clean-out plugs, sleeves, hangers, supports, water closets, lavatories, service sink, grease trap and hot water heater.

P-02 Contractor to verify all existing conditions in the field before proceeding with any work.

P-03 Any appliances or materials obviously a part of the plumbing work and necessary for its proper operation, although not specifically mentioned herein, shall be furnished and installed as if called for in detail.

P-04 All work by the Contractor shall be performed in accordance with Local and National Standard Plumbing Codes. Contractor shall obtain all Permits, Inspections, Tests and Approvals necessary for construction, including payment of all fees and connection charges, as required by local or state authorities.

P-05 Rest rooms shall be built with proper sized doors, stainless steel grab bars, equipment, fixtures, and hardware to meet all prevailing codes for handicapped accessible restroom facilities. (Number of restrooms and requirements for restrooms shall meet all governing codes).

P-06 Plumbing Contractor shall be responsible in checking and obtaining receipt of final dimensional drawing from the Owners/Tenant's/Client, before installation work is to commence.

P-07 Plumbing Contractor shall submit three (3) copies of shop drawings to both the Owner/Tenant/Client and the Architect's Office, for review and approval of all plumbing work, at least (5) five business days prior to commencement of installation of work. Any of the work installed prior to approval of shop drawings, shall be corrected at Contractor's expense.

P-08 It shall be the responsibility of this Contractor to verify and check all details and applicable notes for plumbing work on all of the architectural drawings, and allow for any interferences, etc.

P-09 See all plumbing drawings for symbols, details, and notes.

P-10 This Contractor shall take such protective measures and precautions as necessary and required to prevent any injury or accidents to workmen or any passers-by. Provide guard rails, fences, planking, lighting, signs, etc., in accordance with the particular conditions and in accordance with O.S.H.A. Safety Requirements.

P-11 All work shall be scheduled with the approval of the Owner's/ Tenant's/ Client's Construction representative.

P-12 This Contractor shall submit a detailed and dimensioned "As Built" reproducible drawing showing the final location of all underfloor and concealed water and sanitary sewer lines, to the Architect or Tenant/Owner/Client upon completion and acceptance of the construction area by Tenant/Owner/Client. The Architect will provide, upon request, either additional prints or sepias, to assist in the preparing of the "As Built" drawing.

P-13 Where existing and new plumbing lines are to be kept and found to be running through Tenant/Client or Owner's space, move plumbing tight to nearest wall. General Contractor to box out with 1/2" gypsum board or 1/2" moisture resistance board, over 3 5/8" metal stud 16" O.C. to just above ceiling.

P-14 No existing or new vents, pipes, roof drain leaders, etc. to be run exposed, box out same on the surface of all walls with 1/2" gypsum board over metal studs in all areas.

P-15 All existing plumbing fixtures, pipe, equipment, and appurtenances not in use, shall be removed and/or reused if possible. Cap, per code, all abandoned and existing pipe and patch all surfaces, as required, to match new and existing construction.

P-16 For extent of the work required at the exterior of building, see Site Plan Sheet.

P-17 This Contractor shall excavate (with the sau cutting method) backfill and compact to 95 density, for all underground trenches pertaining to this work using granular or sand backfill, unless specifically noted otherwise, for interior work. Remove excavated material from site, unless noted otherwise. and, backfill with stone in paved areas and as approved or noted in unpaved areas - see Site Plan.

P-18 This Contractor shall check and verify all invert elevations of sewer and water lines, before proceeding with work. Direction and approval in setting inverts, grades, etc., shall be obtained from Architect or Owner's/Tenant's/Client's - report any discrepancies.

P-19 Provide 4" round sanitary line for lavatory and water closets. (typical each toilet room)

P-20 Provide water meter and appropriate size domestic water lines, including appropriate hot and cold water lines.

P-21 All piping installed per Local Code and Water Company requirements.

P-22 Insulate where necessary, any exposed piping.

P-23 It shall be the responsibility of this Contractor to provide for the masons (concrete) and other trades as required, all sleeves for openings or penetrations thru walls, floors, and roof, required for his work, provide exact location of drains, piping, etc. as approved by the Tenant/Client or Architect and the Owner's/ Tenant's/ Client's Construction Representative.

P-24 All sleeves as required, shall be provided by this Contractor for any walls or floors that have not been poured - otherwise, all necessary holes shall be core-bored drilled.

P-25 All cutting and patching pertaining to the installation of this work shall be done as required and approved by the Owner's/Tenant's/ Client's Construction Representative or of the Architect.

P-26 All plumbing pipes and fixtures shall be protected from freezing - Provide insulation in walls, floors, etc. as may be indicated, or required to prevent same.

P-27 Do not run main branch lines or place any clean outs under fixtures or equipment.

P-28 All underground sanitary sewer lines shall be cast iron of proper size or as indicated on drawings, with a minimum size of 4" diameter. All cast iron pipes shall be standard service weight with gasketed joints (Provide an alternate price for use of plastic, where permitted by local codes).

P-29 Minimum sanitary sewer line pitch shall be set at 1/4" per foot with each invert minimum of 1' 0" below floor unless specifically indicated or approved to the contrary by the Architect or Owner's/ Tenant's/ Client's Construction Representative. Any lines installed improperly shall be removed and replaced at Contractor's cost.

P-30 All waste and vent piping above floor and size of 2" and less, shall be galvanized steel Type DWV, Copper or cast iron pipe. All other pipes larger than 2" diameter shall be cast iron, unless specifically noted otherwise. (Provide an alternate price for use of plastic, where permitted by Local Codes)

P-31 Every horizontal soil and waste pipe shall be provided with a readily accessible clean out and where necessary by code. Provide clean outs as indicated on drawings and/or as required by Local Code, at no additional cost to Owner/Tenant/Client.

P-33 Provide 4" round vents where necessary per codes thru roof, lead or galvanized vent flashing and counter flashing with gasket and made waterproof.

P-34 All piping to be suspended from structural members of building, as approved by Architect or Owner's/ Client's Construction Representative. For pipes 1" diameter or less, utilize either solid or split ring type hanger. All hangers at 8' - 0" O/C maximum.

P-35 All water piping to be overhead, copper Type "L" Copper Tube (Overhead lines only allowed unless specifically indicated as below slab, in which case copper Type "K" shall be used), with sweat fitting (soldered) thru-out, except where compression fitting are necessary. Provide dielectric isolator between all dissimilar materials.

P-36 All water pipes shall be Type "L" copper tube, with wrought fittings and lead free solder.

P-37 All water supply lines and all other piping subject to condensation shall be insulated.

P-38 All suspended cold and water piping (including piping concealed in walls and floors, soffits, fittings, valves, etc.) shall be insulated with 1/2" Armstrong "Armaflex-II" or Rubatex R-180-F6. Joints to be sealed with Armstrong 520 or Runatex 375 adhesive.

P-39 Provide shut-off valves below all fixtures (chrome type in finished areas and as directed by Owner's/Tenant's/Client's Construction Representative), at all branch lines and in rooms on exposed water line outlets. All to be in accessible location and position.

P-40 Restroom accessories shall include one (1) roll tissue holder for each water closet, one (1) surface mounted 18" x 24" mirrored over each lavatory, one (1) liquid soap dispenser for each lavatory, all shall be furnished and installed by the Contractor meeting all prevailing handicapped accessible codes where necessary or indicated on drawings.

P-41 Plumbing Contractor to completely correct all fixtures furnished by the Owner/Tenant/Client, or as noted.

P-42 Final connections to all equipment furnished by Owner/ Tenant/ Client, shall be installed by THIS PLUMBING CONTRACTOR. Specialty Sinks and all other equipment, etc., not otherwise provided for in these specifications or contract documents, shall be furnished by Owner/ Tenant/ Client and connected by THIS PLUMBING CONTRACTOR, see Equipment Schedule.

P-43 Location of all fixtures and equipment as approved by Architect and Owner's/ Tenant's/ Client's Construction Representative. Failure to do so will not alleviate having to revamp as approved, at Contractor's expense.

P-44 Plumbing Contractor shall furnish and install water service lines, as indicated or required. Verify exact size, location, and site of service entrance with Landlord/ Tenant's/ Client's Construction Representative.

P-45 This Contractor shall place some type of marker at least 36" to 42" high above the floor line, in order to denote an open or raised drain, complying with O.S.H.A. requirements.

P-46 This CONTRACTOR shall properly tag all valves with metal tags and shall submit a valve schedule along with a parts manual of all plumbing fixtures to Owner/ Tenant/ Client upon acceptance of the premises.

P-47 All copper piping installed through aluminum studding shall be sleeved through PVC.

P-48 All dimensions are from finished or unfinished masonry walls, cases, or coolers. Verify dimensions prior to installation with the Owner's/ Tenant's/ Client's Construction Representative.

P-49 Existing fixtures to remain, clean and repair, as required and make operable.

END OF SECTION

H.V.A.C. GENERAL NOTES

M-01 Contractor will provide and install entire H.V.A.C. system to the Construction area meeting the following criteria.

M-02 This Contractor shall take such protective measures and precautions as necessary and required to prevent any injury or accidents to workmen or any passers-by. Provide guard rails, fences, planking, lighting etc., in accordance with the particular conditions and in accordance with O.S.H.A. Safety Requirements.

M-03 Verify site dimensions and conditions prior to work.

M-04 Dimensions superseds drawings.

M-05 Install all diffusers, registers, thermostats, ceilenoid switches, etc. where shown on Architectural & Mechanical Plans, or as directed by Architect and necessary for a complete and operating system.

M-06 Refer to specifications for all work required.

M-07 Grilles, registers, to be Agitair Co, T & B Co, Carnes Co, or Krueger Co. All items furnished with white finish, except where noted otherwise on drawings. Diffusers to be Model "RCTC" type with full flow dampers of size to suit ceiling panels. Supply registers to be double deflection type with adjustable opposed blade dampers. Exhaust and return registers to have 45 degree angle blades with dampers. Provide dry wall or plaster frame for all wall & ceiling registers and grilles in dry wall or plastered walls.

M-08 Duct registers, grilles, and diffusers, shall be installed in accordance with the manufacturer's installation instructions. Supply air duct registers, grilles, and diffusers, shall have a volume adjustment.

M-09 Any and all changes to H.V.A.C. drawings shall be submitted in the form of shop drawings and have approval of Architect or Engineer before proceeding with any work.

M-10 Louvers shall be extruded aluminum, horizontal line louvers, Model No. 615, four (4) inches deep, as manufactured by Construction Specialties Co, Airolite Company, or Penn Ventilator Co., complete with bird screen. Louvers shall be furnished with KYNAR 500 coating or dark bronze duronodic color as selected by Architect.

M-11 All thermostats shall be provided with tamper-proof covers.

M-12 This Contractor is responsible to obtain and pay for all necessary permits and approvals, and meet all local codes pertaining to H.V.A.C. system.

M-13 All substitutions to be approved by Architect or Owner/ Tenant.

M-14 This contractor to check all existing H.V.A.C. System and if necessary repair and make operable, replace if necessary.

M-15 All existing revised duct work to be extended if necessary. Relocate supply and return diffusers and registers using new diffusers and registers, etc. in new ceiling areas.

M-16 Contractor to provide Architect or Engineer with shop drawings of roof cuts and curbing for new roof top and/or compressor units, and submit shop drawings for approval of duct work system before proceeding with fabrication or installation.

M-17 This contractor shall submit as-built drawings to Architect or Owner/Tenant upon completion and acceptance of the construction area by Owner/Tenant. The Architect will provide, upon request, either additional prints or sepias, to assist in the preparation of the as-built drawing.

M-18 Any appliances, equipment, or materials obviously a part of the H.V.A.C. work and necessary for its proper operation, although not specifically mentioned herein, shall be furnished and installed, as if called for in detail.

DUCTWORK

M-19 Install all ductwork shown on drawings and include supply, return, exhaust, outside air ductwork, ductwork liner, louvers, plenums, diffusers, registers, fire dampers, supports, flexible equipment connections, double vanned duct turns, access doors, manual dampers, test holes, and caps, testing and balancing, fabrication and installation drawings and all accessories and appurtenances for a complete and satisfactory operating system.

M-20 Ductwork shall be constructed in strict conformity with the methods, standards, and recommendations of the A.S.H.R.A.E. Guide, S.M.A.C.N.A. Manual, and N.B.F.U. Pamphlet No. 90A, and '96, latest issue.

M-21 The design and installation of an air distribution system shall conform to accepted engineering practice.

M-22 Nonmetallic ducts shall be constructed with Class 0 or Class 1 duct material in accordance with UL 181 listed, insulated.

M-23 All changes in direction of ductwork to have turning vanes, or splitter dampers, whichever is appropriate.

M-24 All duct sizes given are free area inside. (I.D.) Insulation and adhesives used on this project shall have a flame spread classification of not more than 25 and a smoke developed rating of not more than 50.

M-25 All ductwork connected to units to have flexible connections.

M-26 All H.V.A.C. ductwork shall be constructed of galvanized steel of gauges required, internally insulated.

M-27 All joints in a duct system shall be made tight. Duct tape or joint tape may be used to seal joints.

M-28 All flexible ductwork to run 12'-0" maximum, pulled tight, and machine banded.

M-29 The temperature of air in flexible ducts or flexible connectors shall be less than 250 degree F. Flexible ducts and flexible connectors shall not be installed within 6 feet of a heating element.

M-30 The balancing of this system will be critical to its performance. It is to be the H.V.A.C. Contractor's responsibility.

M-31 All medium pressure ductwork to be hardcast or ductmate flanged to maintain 6" maximum pressure and 3" minimum pressure.

M-32 Splitter dampers to be placed at the connections of a branch and main duct unless noted otherwise.

M-33 Air distribution systems with a capacity between 1,000 (0.94m 3/s) and 15,000 CFM (7.08 m 3/s) shall be equipped with a heat detector and/or approved smoke detector, located in the return air duct.

M-34 Upon activation, the smoke or heat detectors shall shut down the air distribution systems which are part of a smoke control system may switch to smoke control mode upon activation of a detector.

M-35 Fire dampers to be installed according to Local, State and National Fire Codes.

M-36 Install fire dampers in all duct risers between floors, at roof and where noted on drawings. Provide 12" x 12" hinged doors in ducts, partitions, and ceilings for access to dampers.

M-37 Fire and smoke dampers shall be installed in all ducts as required by Local and State authorities, N.B.F.U. and where indicated on drawings. Fire dampers to be "Fire/Seal" Model No. 119-1L horizontal or vertical, shutter type with 160 degree F. fusible link and sleeve, 99% free area. Smoke dampers shall be motorized type. Sleeves to extend to each side of wall or floor and be supported from building. All dampers shall bear UL. Label. Dampers shall be Ruskin Co., Air Balance, or T & B Co.

M-38 Each fire damper to have an 8" x 12" minimum inspection door.

M-39 All ductwork to be insulated unless otherwise specified.

M-40 All ductwork on roof to have maximum density 2" insulation and weatherproofing.

M-41 All supply, return, and outside air ductwork shall be internally lined with one (1) inch thick, 1.5 lb. density, fibrous glass insulation having a factory applied fire resistive and noneroding surface exposed to the air stream. Lining shall be rated up to 4,000 FPM velocity, UL. approved. Duct liner shall be equal to Johns-Manville Co. "LINA-COUSTIC", Owens-Corning Co "AEROFLEX DUCT LINER", Certain-Teed/St. Gobain Co."ULTRALINER". Exposed ductwork located on roof shall be lined with two (2) inch thick liner.

M-42 All ductwork shall be concealed above ceilings, in wall, or in furred spaces.

M-43 Ducts shall be supported with approved hangers at intervals not exceeding 10 feet (3048 mm).

UNIT NOTES

M-44 All coils to have inspection doors for cleaning if not paneled in unit.

M-45 All service doors for dampers to have hinges, sash locks, and gaskets, as indicated.

M-46 Provide condensate drain lines from all air handling units to grade (grass), roof, mop receptors, or safe-waste drains complying with Norwood Borough, Local, or State Codes.

M-47 All condensate lines to be trapped.

M-48 All air conditioning and heating units to be level.

M-49 Check all gas-fired units for correct type of gas, natural or propane.

M-50 Heat pump outdoor units to have 18" minimum snow clearance.

M-51 All roof curbs to be 12" high minimum.

M-52 Provide pre-fab insulated aluminum curbs with cant strips for all duct penetrations thru roof and for ventilators.

M-53 Roof cats to be constructed by Certified Roofer. Curbs for H.V.A.C. units to be set by H.V.A.C. Contractor, using corresponding manufacturer's RTU curbs, installed per manufacturer's specifications.

M-54 Roof top units to be placed between joists, as shown.

M-55 Air filters shall be one/two inch thick disposable type, 30 Std. No. 52-68. Provide manometer gauge across filters.

M-56 Provide remote control center with indicating lights for Fan ON, COOL ON, HEAT ON, (2 stages). Clogged Filters, and separate remote thermostat (2 stage type) with vandal-proof cover. Locate control centers, time clock, and thermostats where directed, or shown on drawings. Provide safety controls as specified hereinafter. Provide 24 hour time clock with bypass switch for operating each unit complete with Night Stat for lower operating temperature on winter setting. (Fan to cycle with heating coil, outside air damper to remain closed) Locate control centers and time clocks where directed by Architect.

M-57 Units shall be Carrier Co.

STRUCTURAL NOTES

M-58 All roof openings to have angle iron support frame if 12" x 12" or larger. Provide Architect and Structural Engineer with shop drawings and have his approval before proceeding with any work.

M-59 Provide Pate Co. roof equipment supports for all units located on roof or concrete pads for units located at grade.

M-60 Provide Manufactures Corresponding Curb roof equipment supports for all units located on roof or concrete pads for units located at grade.

(FUEL) GAS NOTES

M-61 Install gas conversion kits before installing hanging heaters.

M-62 H.V.A.C. Contractor to be responsible for gas piping and all installation applications with local gas company.

M-63 All piping must be leak tested prior to start up.

M-64 Gas service meter per local gas company requirements, provide 6" dirt leg and gas cock.

M-65 Gas service, piping and meter to be installed for H.V.A.C. System, per local gas company requirement, providing 6" dirt legs and gas cocks.

M-66 Gas pipe fittings to be of malleable steel.

M-67 Gas meter location coordination to be H.V.A.C. Contractor's responsibility.

H.V.A.C. ELECTRICAL NOTES

M-68 Wire in accordance with all Local and National Electrical Codes.

M-69 Check unit(s) for correct voltage and electric phase before installation.

M-70 All wire to be copper, minimum #12 aug. for 15 amps and less line voltage, and minimum #8 aug. (.040" diameter min.) for control wiring.

M-71 Wiring size indicated are recommended per Section 310.16 of N.E.C., copper wire thu. 75 degree C raceway, up to 100 ft. run with 3

M-72 Provide all necessary electric control wiring for each (H.V.A.C.) units operation.

M-73 Provide all necessary electric control wiring for kitchen exhaust hood operation.

M-74 Provide all necessary electric control wiring for kitchen walk-in box(es).

EXHAUST FAN NOTES

M-75 Provide Rest Room exhaust fans for ventilation with min 6 air changes per hour, vented to exterior with end cap, bird and insect screen.

Note: Hood contractor to fabricate, design and install hood duct, exhaust fan, fire suppression system and fresh air inlet. Power wiring and lighting by Electrical contractor.

END OF SECTION

ELECTRICAL GENERAL NOTES

E-01 Provide minimum service as shown on construction documents, 120/208 volt/3 phase, 4 wire electrical service (Contractor to provide any additional power or electrical service necessary) to Construction Area, including 42 circuit panel (s). Verify exact location of M.D.P.

E-02 Electrical Contractor shall visit the site and familiarize himself with all job conditions and contract drawings for possible bearing on his work.

E-03 Visit the site before bidding. Unfamiliarity with preexisting conditions will not be valid basis for additional charge.

E-04 Prior to bidding, examine the existing building and compare conditions with the drawings. Call any discrepancies to the attention of the architect. If none are reported, contractor will comply with all code requirements regardless of drawing errors or omissions, without additional cost.

E-05 Electrical Contractor shall provide labor and materials necessary for a complete and operating electrical system.

E-06 Entire installation shall be in strict accordance with the National Electrical Code and all State and Local Codes having jurisdiction.

E-07 All work by the Contractor shall be performed in accordance with Local and National Electrical Codes. Contractor shall obtain all Permits, Inspections, Tests and Approvals necessary for the introduction of power and construction, including payment of all fees and connection charges, as required by local or state authorities.

E-08 Submit to the architect for comment, shop drawings of major items of equipment.

E-09 Furnish technical manuals, instructions in operation of major equipment, and an as built drawings of the project.

E-10 Verify exact locations of all equipment with the architect. Ventilation of space must comply with manufacturer's requirements.

E-11 Provide all electrical service, overhead or underground service, necessary transformer pads, panels, meter sockets, step up and step down transformers, conduit, fittings, junction boxes, and outlet boxes, as required for entire installation of electrical system.

E-12 Apply for and verify arrangement, location and amount of electrical service to construction area with Electric Company.

E-13 All devices shall be specification grade with ratings as required by load supplied and fault current as obtained from power company.

E-14 Entire installation shall meet Local Electric Company's requirements and recommendations of equipment manufacturer.

E-15 This Contractor shall take such protective measures and precautions as necessary and required to prevent any injury or accidents to workmen or any passers-by. Provide guard rails, fences, planking, lighting, signs, etc., in accordance with the particular conditions and in accordance with O.S.H.A. Safety Requirements and Regulations.

E-16 Make temporary connections as required to maintain essential services during period of construction.

E-17 Upon completion of installation, test all systems for unwanted grounds.

E-18 All material shall bear UL label, when available.

E-19 Pay for and obtain all inspection fees and permits. Inspection to be made by the Middle Department Association Office, or similar inspection service and provide a certificate of compliance with the N.E.C.

E-20 The Electrical Contractor shall do all necessary excavation and backfilling.

E-21 Provide necessary flashing and counter flashing where conduits, pass thru roof or exterior walls.

E-22 E-22 PONTING WILL BE PROVIDED BY THE GENERAL CONTRACTOR.

E-23 PROVIDE ALL NECESSARY SLEEVES, SUPPORTS, AND HANGERS, AS REQUIRED FOR THE ELECTRICAL INSTALLATION.

E-24 ALL ABANDONED WIRING SHALL BE REMOVED UNLESS CONCEALED. CONCEALED WIRING SHALL BE DISCONNECTED FROM POWER SUPPLY AT SOURCE.

E-25 EXISTING WIRING IN GOOD CONDITION MAY BE USED PROVIDED IT COMPLIES WITH THE NEC AND THE PROJECT SPECIFICATION.

E-26 ALL FIXTURES WHICH ARE TO REMAIN OR ARE RELOCATED, SHALL BE CLEANED, REPAIRED, AND RELAMPED (AND PROVIDED WITH NEW BALLASTS). DISCOLORED DIFFUSERS SHALL BE REPLACED.

E-27 WIRING THAT MUST REMAIN SHALL BE RELOCATED, IF NECESSARY, TO AVOID INTERFERENCE WITH STRUCTURAL CHANGES.

E-28 ALL NEW PANEL BOARDS SHALL BE I.T.E., OR APPROVED EQUAL.

E-29 DO WIRING FOR ALL OTHER TRADES. NOTIFY THEM OF POWER CHARACTERISTICS AND OBTAIN REQUIREMENTS FOR CIRCUITING BEFORE STARTING WORK.

E-30 PROVIDE ELECTRICAL PANELS AND TIME CLOCKS, AS SHOWN, OR AS NECESSARY.

E-31 PANEL BOARDS SHALL HAVE DIRECTORIES TYPED TO INDICATE CIRCUITS SUPPLIED.

E-32 BALANCE LOADS ON PANELS AND BETWEEN PHASES.

E-33 LOADS SHALL BE BALANCED AS CLOSELY AS POSSIBLE.

E-34 ANY PANELS OR BREAKERS WHICH NEED REPLACING SHALL CONTAIN BOLT ON BREAKER, THIRTY (30) AMP SWITCHABLE OR GREATER.

E-35 PROVIDE AND INSTALL A SPARE FUSE FOR EVERY GAP. FUSES SHALL BE DUAL-ELEMENT, TYPE OF RATING SHOWN ON DRAWING.

E-36 GROUND ENTIRE ELECTRICAL SYSTEM.

E-37 ENTIRE SYSTEM SHALL BE GUARANTEED FOR ONE YEAR FROM DATE OF FINAL ACCEPTANCE BY TENANT/OWNER/LANDLORD.

E-38 POWER WIRING SHALL BE PROVIDED BY ELECTRICAL CONTRACTOR, CONTROL WIRING WILL BE PROVIDED BY THE MECHANICAL AND PLUMBING CONTRACTOR.

E-39 PROVIDE ALL NECESSARY ELECTRIC CONTROL WIRING FOR EACH (H.V.A.C.) UNITS OPERATION.

E-40 PROVIDE ALL NECESSARY ELECTRIC CONTROL WIRING FOR KITCHEN EXHAUST HOOD OPERATION.

E-41 PROVIDE ALL NECESSARY ELECTRIC CONTROL WIRING FOR KITCHEN WALK-IN BOX(ES).

E-42 PROVIDE ALL NECESSARY ELECTRIC POWER WIRING FOR ALL CONSTRUCTION AREA.

E-43 ELECTRICAL CONTRACTOR SHALL BE RESPONSIBLE FOR CORRECT ROTATION OF POLY PHASE MOTORS.

E-44 PROVIDE DISCONNECT SWITCHES AS REQUIRED BY NATIONAL ELECTRIC CODE.

E-45 PROVIDE MOTOR DISCONNECTS WHETHER OR NOT INDICATED ON DRAWINGS.

E-46 PROVIDE G.F.C.I. TYPE OUTLETS AS REQUIRED BY NATIONAL ELECTRIC CODE.

E-47 SWITCHES SHALL BE RATED 120/277, 15 AMPS, IVORY/WHITE/GREY, BRYANT, CIRCLE, "P" LEVITON, SILENT TYPE, OR APPROVED EQUAL.

E-48 RECEPTACLES SHALL BE RATED 125V, 20 AMPS, IVORY/WHITE/GREY, BRYANT, CIRCLE, "P" LEVITON, OR APPROVED EQUAL, GROUNDING TYPE.

E-49 SAFETY SWITCHES TO BE I.T.E., OR APPROVED EQUAL.

E-50 DEVICE PLATES SHALL BE STAINLESS STEEL. (TELEPHONE, SWITCH, RECEPTACLE, CABLE)

E-51 PROVIDE LAMPS FOR ALL FIXTURES, NEW OR EXISTING.

E-52 NEW AND EXISTING FLORESCENT FIXTURES OR T-8 LAMPS SHALL BE EQUIPPED W/CLASS "D" OR ENERGY EFFICIENT BALLAST, (SIMKAR, KEYSTONE, OR EQUAL.) FLORESCENT LAMPS SHALL BE COOL WHITE. INCANDESCENT LAMPS SHALL BE RATED 125 VOLTS, INSIDE FROSTED, AS RECOMMENDED BY MANUFACTURER.

E-53 WIRE IN ACCORDANCE WITH ALL LOCAL AND NATIONAL ELECTRICAL CODES.

E-54 CHECK ALL ELECTRICAL EQUIPMENT FOR CORRECT VOLTAGE AND ELECTRIC PHASE BEFORE INSTALLATION AND PROVIDE APPROPRIATE WIRING AND CIRCUITING NECESSARY.

E-48 RECEPTACLES SHALL BE RATED 125V, 20 AMPS, IVORY/WHITE/GREY, BRYANT, CIRCLE, "P" LEVITON, OR APPROVED EQUAL, GROUNDING TYPE.

E-49 SAFETY SWITCHES TO BE I.T.E., OR APPROVED EQUAL.

E-50 DEVICE PLATES SHALL BE STAINLESS STEEL. (TELEPHONE, SWITCH, RECEPTACLE, CABLE)

E-51 PROVIDE LAMPS FOR ALL FIXTURES, NEW OR EXISTING.

E-52 NEW AND EXISTING FLORESCENT FIXTURES OR T-8 LAMPS SHALL BE EQUIPPED W/CLASS "D" OR ENERGY EFFICIENT BALLAST, (SIMKAR, KEYSTONE, OR EQUAL.) FLORESCENT LAMPS SHALL BE COOL WHITE. INCANDESCENT LAMPS SHALL BE RATED 125 VOLTS, INSIDE FROSTED, AS RECOMMENDED BY MANUFACTURER.

E-53 WIRE IN ACCORDANCE WITH ALL LOCAL AND NATIONAL ELECTRICAL CODES.

E-54 CHECK ALL ELECTRICAL EQUIPMENT FOR CORRECT VOLTAGE AND ELECTRIC PHASE BEFORE INSTALLATION AND PROVIDE APPROPRIATE WIRING AND CIRCUITING NECESSARY.

E-55 Wiring methods: (a) All conductors shall be copper. (b) Wiring in unfinished areas shall be in NEC approved raceways. (d) Wiring under paved areas shall be in NEC approved conduit. (d) Wiring in finished areas shall be concealed. (e) Minimum conductor size, #12. (f) Insulation for size 8 and larger shall be rated 90 degrees C, wet or dry.

E-56 Wire and cable, as permitted by authorities may be copper conductor, armored cable (Bx), or non-metallic, sheathed cable (Romex) w/600 volt insulation in conduit wire and cable shall be copper conductor type "THWN".

E-57 All wire to be copper, minimum #12 aug. for 15 amps and less line voltage, and minimum #8 aug. (.040" diameter min.) for control wiring.

E-58 Wiring size indicated are recommended per Section 310.16 of N.E.C., copper wire thu. 75 degree C raceway, up to 100 ft. run, with 3

E-59 Any appliances, equipment, or materials obviously a part of the electrical work and necessary for its proper operation, although not specifically mentioned herein, shall be furnished and installed, as if called for in detail.

E-60 All conduit passing thru the exterior of building, shall always be in metal conduit of sufficient size to accommodate all wiring for exterior use. Provide flashing, counter flashing caulking as necessary.

E-61 No changes in this specification shall be made without prior written agreement.

E-62 No requests for extras will be accepted after work has been performed.

E-63 Provide incidental items such as access panels without additional charge.

E-64 Contractor to provide concrete pad, concrete filled steel bollards, etc., per local Electric Co. codes and requirements where necessary when electric exterior transformer is required.

Note: Hood contractor to fabricate, design and install hood duct, exhaust fan, fire suppression system and fresh air inlet. Power wiring and lighting by Electrical contractor.

END OF SECTION

ALBERT TAUS & ASSOCIATES, ARCHITECT
ALBERT TAUS, A.I.A.
ARCHITECTURE PLANNING INTERIOR DESIGN ENGINEERING
PHILADELPHIA, PA
PHONE: (215) 888-2518 FAX: (215) 888-7388
atausarchitects.com

THESE PLANS ARE THE PROPERTY OF ALBERT TAUS & ASSOCIATES, ARCHITECTS, AND ARE NOT TO BE USED WITHOUT THE EXPRESSED WRITTEN PERMISSION OR CONSENT OF ALBERT A. TAUS, R.A., A.I.A.

STATE OF MISSOURI
ALBERT A. TAUS
NUMBER
A-2015032715
ARCHITECT
MO# A-2015032715 SIGNATURE

DOCUMENTS PREPARED FOR
DDJ21DOUGLAS, LLC
C/o: MR. HOSSAM SHAHIN
109 E. HALE LAKE RD
WARRENSBURG, MO 64093

ATA200602.10

NO	DESCRIPTION	DATE	APPD
6			
5			
4			
3			
2			
1			
–			

REVISIONS

DATE	04/29/21
SCALE	AS NOTED
DRAWN	GR
CKD	DJK
APPD	AAT

THESE PLANS ARE CONFIDENTIAL PROPERTY OF DUNKIN' BRANDS INC. UNDER RESTRICTED ACCESS

PROPOSED PROJECT
DUNKIN' WITH DRIVE THRU
1100 NE DOUGLAS STREET
LEE'S SUMMIT MO. 64086
NEXT GEN (COOL PALAETTE)
M.E.P SPECIFICATIONS

DUNKIN' BRANDS [eat drink think]

GS1.2

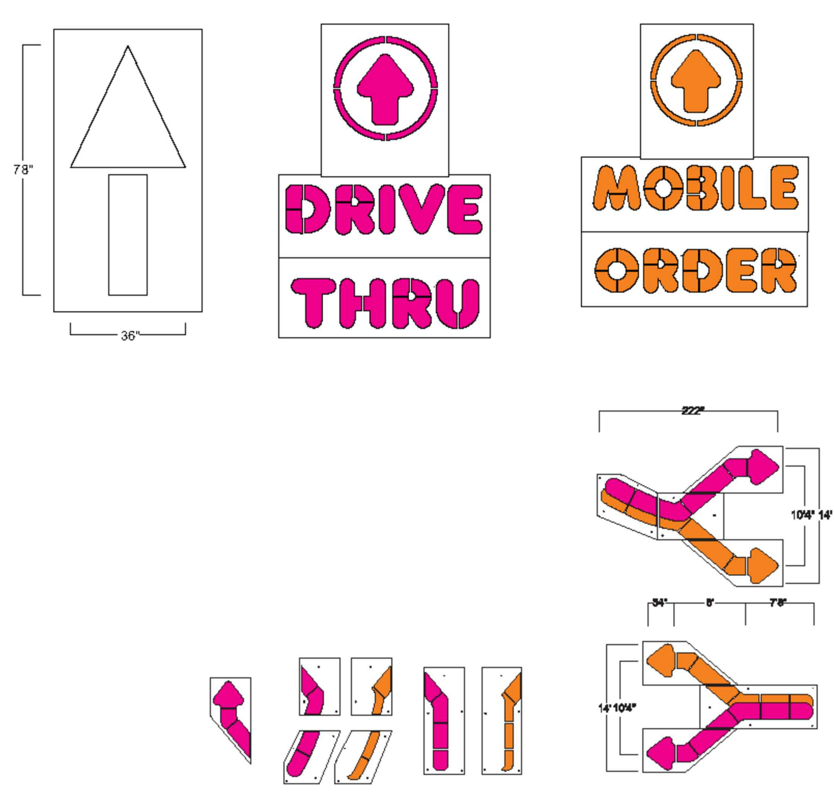

7 STENCIL SITE DETAIL
SP1.0 SCALE: NOT TO SCALE

(3) SIGN LOCATION:

DUNKIN LOGO SIGN CRITERIA

SIZE	H1	W1	AREA (SQ)	PYLON LAMP
SMALL	18"	102"	13	White Nichia LED's
MEDIUM	24"	136"	24.8	
LARGE	30"	170"	35.4	

GENERAL DUNKIN SIGN NOTES:
SIGN CONTRACTOR TO;
- V.I.F. EXACT SIZE & LOCATION.
- SECURE ALL REQUIRED PERMITS PRIOR TO FABRICATION.
- PREPARE ENGINEERED SHOP DRAWINGS INCLUDING FOUNDATIONS, SUPPORT AND LOCATION WITH RELATION TO PROPERTY LINES.
- VERIFY ALL REQUIRED INFORMATION WITH LOCAL TOWNSHIP.
- SIGN CONTRACTOR TO VERIFY WITH LOCAL MUNICIPALITIES THAT ALL SIGNAGE PROPOSED IS APPROVED PRIOR TO FINAL PRICING OR PRIOR TO FABRICATION.

DD COLOR & MATERIAL NOTE:
FACES TO BE PAN FORMED AND EMBOSSED LOGO; CLEAR SOLAR GRADE POLYCARBONATE
COLORS:
BACKGROUND TO BE WHITE.
VINYL COLORS TO BE:
DD ORANGE-PMS 165: 3M #3630-3123
DD MAGENTA-PMS 219: 3M #3630-1379
DD CHARCOAL-PMS 7540
ON WHITE BACKGROUND.
ALL VINYL TO BE APPLIED TO THE SECOND SURFACE.
CANS AND POLES TO BE PAINTED DD CHARCOAL, RUST-INHIBITIVE SEMI-GLOSS FINISH
ILLUMINATION TO BE WHITE Nichia LED's

8 BUILDING SIGNAGE DETAIL
SP1.0 SCALE: NTS

(1) SIGN LOCATION:

DRIVE THRU LED ILLUMINATED SIGN CRITERIA

SIZE	H1	W1	AREA (SQ)	
SMALL	12"	97.5"	8.12'	White Nichia LED's
MEDIUM	18"	146"	18.26'	
LARGE	24"	194.75"	32.47'	

GENERAL DUNKIN SIGN NOTES:
SIGN CONTRACTOR TO;
- V.I.F. EXACT SIZE & LOCATION.
- SECURE ALL REQUIRED PERMITS PRIOR TO FABRICATION.
- PREPARE ENGINEERED SHOP DRAWINGS INCLUDING FOUNDATIONS, SUPPORT AND LOCATION WITH RELATION TO PROPERTY LINES.
- VERIFY ALL REQUIRED INFORMATION WITH LOCAL TOWNSHIP.
- SIGN CONTRACTOR TO VERIFY WITH LOCAL MUNICIPALITIES THAT ALL SIGNAGE PROPOSED IS APPROVED PRIOR TO FINAL PRICING OR PRIOR TO FABRICATION.

GENERAL NOTES

1. .05" x 5" ALUMINUM RETURNS PAINTED TO MATCH PMS 7540C
2. 1" TRIM CAP TO MATCH JEWELITE 313 BRONZE
3. .063" ALUMINUM BACKING
4. GE TETRA MAX 7100K WHITE LED'S (OR GE REPLACEMENT EQUIVALENT)
5. REMOTE POWER SUPPLY, AS REQUIRED
6. DRAIN HOLES, AS REQUIRED
7. MOUNTING HARDWARE, AS DETERMINED BY SITE CONDITIONS
8. 3/16" THICK WHITE ACRYLIC FACE
9. 3M #3630-1379 DUNKIN' PINK TRANSLUCENT FILM 1ST SURFACE

ADDITIONAL NOTES

ARTWORK FONT : DUNKIN SANS DISPLAY
CHANNEL LETTER INTERIOR PAINTED REFLECTIVE WHITE
ELECTRICAL : (1) 20-AMP / 120 VOLT CIRCUIT
U.L. LISTED
LED'S TO BE POPULATED FOR EVEN AND CONSISTENT LIGHTING WITHOUT HOT SPOTS OR SHADOWS

9 BUILDING SIGNAGE DETAIL
SP1.0 SCALE: NTS

TRAFFIC STRIPING PAINT					
CODE	MATERIAL	MANUFACTURER	PRODUCT #	DESCRIPTION	VENDOR CONTACTS
TP-01	PAINT	SHERWIN WILLIAMS	PRO PARK	"WHITE": B97WD2434	PLACE ORDER WITH LOCAL SHERWIN WILLIAMS STORE FOR A STORE NEAR YOU CALL: 800-474-3794 MARK T. WEINER NATIONAL ACCOUNT EXECUTIVE 93 CHURCH ST BARRINGTON RI 02806 M: 617-438-1408 O: 401-245-5176 EMAIL: MARK.T.WEINER@SHERWIN.COM
TP-02	PAINT	SHERWIN WILLIAMS	PRO PARK	"BLUE": B97LD2022	
TP-03	PAINT	SHERWIN WILLIAMS	PRO PARK	"YELLOW": B97YD2467	
TP-04	PAINT	SHERWIN WILLIAMS	PRO PARK	"ORANGE": CUSTOM MIX B97YD2467 CCE* COLORANT 0Z 32 64 128 W1-WHITE - 6 1 --- R4-NEW RED 4 53 1 --- Y3-DEEP GOLD - 06 - 1	
TP-05	PAINT	SHERWIN WILLIAMS	PRO PARK	"PINK": CUSTOM MIX B97RD2012 CEE* COLORANT 0Z 32 64 128 W1-WHITE 6 -- -- -- L1- BLUE -- 6 -- --	
TP-06	NOT USED				

TRAFFIC STRIPING PAINT

NOTE(S):
1. EXISTING SITE FEATURES TO REMAIN. OVERALL SITE TRAFFIC FLOW, PARKING ARRANGEMENT, CURBING, SIDEWALKS AND ISLANDS.

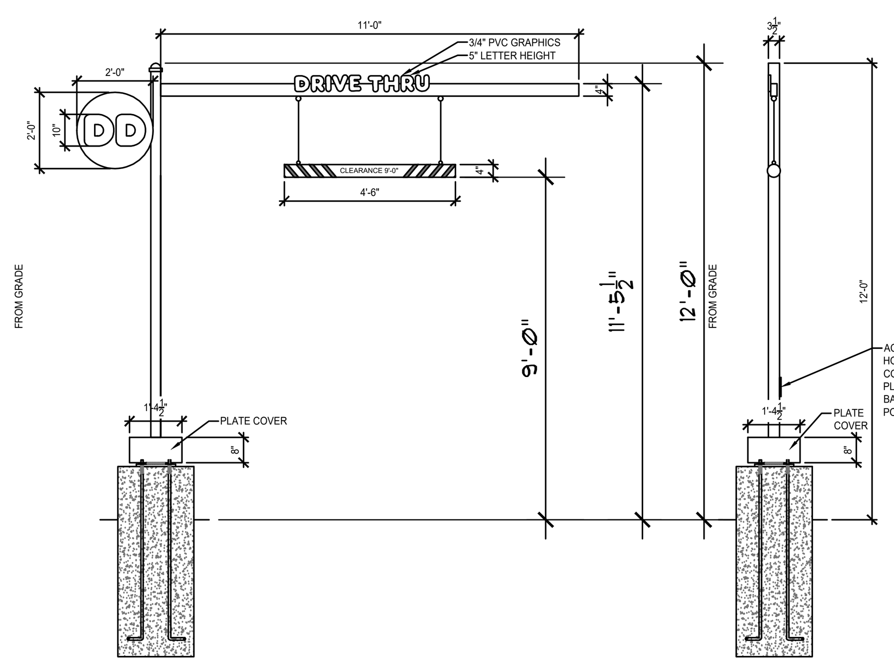

5 SINGLE LANE CLEARANCE BAR DETAIL
SP1.0 SCALE: NOT TO SCALE

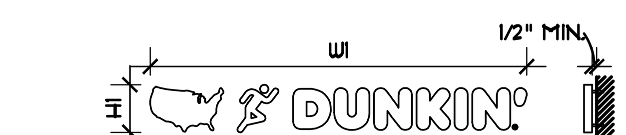

(1) SIGN LOCATION:

AMERICA RUNS ON DUNKIN LOGO SIGN CRITERIA

SIZE	H1	W1	AREA (SQ)	
				NON-ILLUMINATED PIN-MOUNTED LETTER
LARGE	15"	118.75"	12.38	

GENERAL NOTES

1. 3/4" ROUTED PVC LETTERS AND ROUTED PVC MAP
2. MOUNTING STUDS AS REQUIRED PER SITE CONDITIONS. LETTERS SHOULD BE PIN MOUNTED WITH AT LEAST A 1/2" SPACING BETWEEN BACK OF LETTER / BAR AND MOUNTING SURFACE.
3. ROUND PVC DISK PAINTED ORANGE PMS 165 C (REGISTERED "R")
4. "DUNKIN" LETTERS FACES & RETURNS PAINTED ORANGE PMS 165 C
5. MAP, MAN, AND APOSTROPHE (') FACES & RETURNS PAINTED PINK PMS 219 C

ADDITIONAL NOTES:

ARTWORK FONT : DUNKIN SANS DISPLAY
LETTERS SHOULD BE PIN MOUNTED WITH AT LEAST A 1/2" SPACING.

6 ARTWORK SIGNAGE DETAIL
SP1.0 SCALE: 1/4"=1'-0"

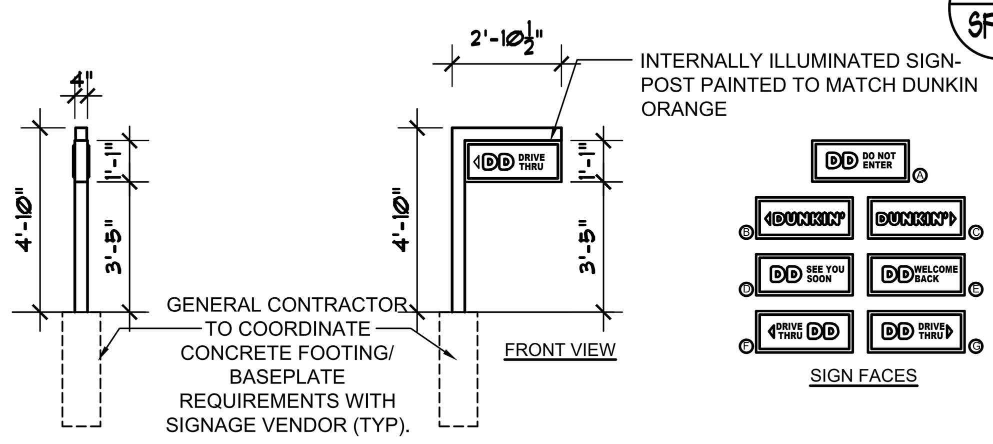

SIDE VIEW

DIRECTIONAL SIGN OPTION 2

AREA OF SIGN: 2.75 SQ FT
LIGHTING: FLORESCENT LAMP

3 DIRECTIONAL SIGNAGE DETAIL
SP1.0 SCALE: NOT TO SCALE

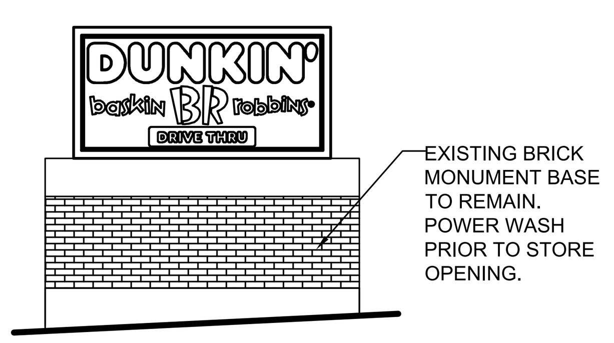

SIGNAGE AREA: +/-41 SQ. FT.

DESCRIPTION:
(1) DOUBLE SIDED MONUMENT SIGN TO REPLACE EXISTING "MASTER WOK EXPRESS" MONUMENT BOX SIGN. LOCATE "DUNKIN" SIGN IN EXISTING BRICK MONUMENT STRUCTURE. VERIFY EXISTING SIGN OPENING IN FIELD.

4 MONUMENT SIGN DETAIL
SP1.0 SCALE: NOT TO SCALE

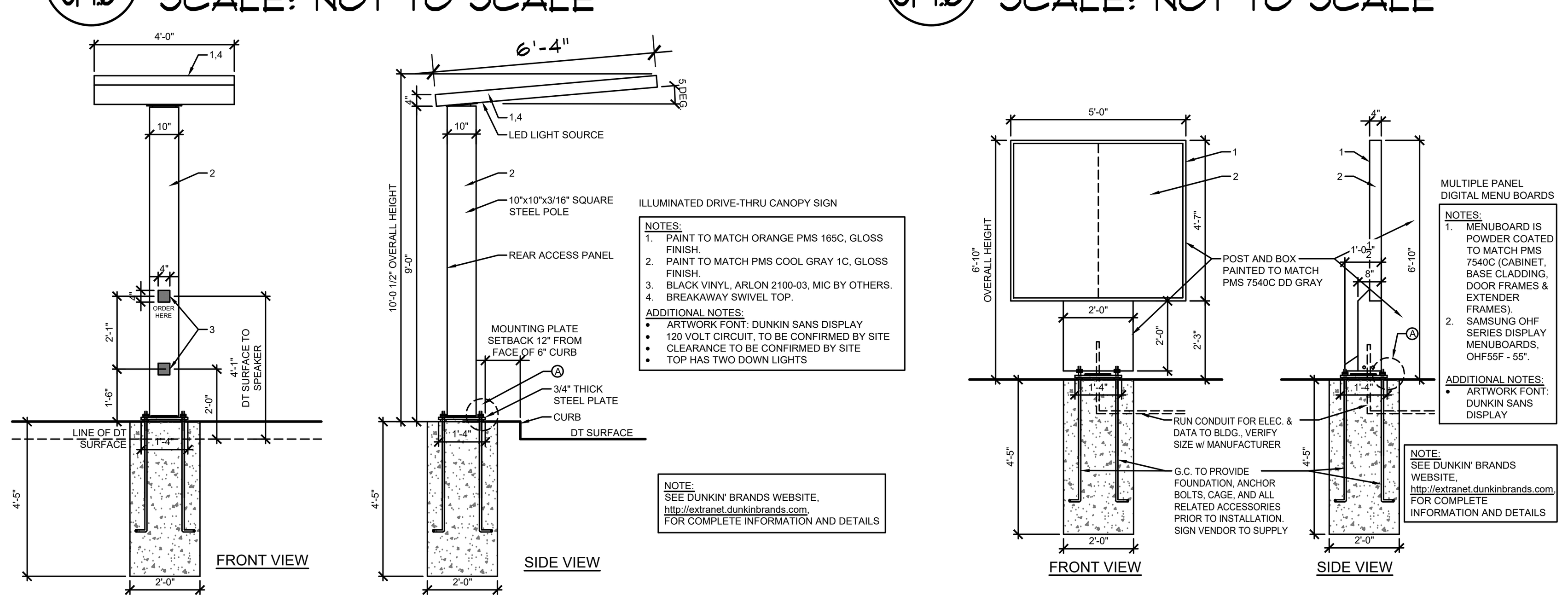

ILLUMINATED DRIVE-THRU CANOPY SIGN

NOTES:
1. PAINT TO MATCH ORANGE PMS 165C, GLOSS FINISH.
2. PAINT TO MATCH PMS COOL GRAY 1C, GLOSS FINISH.
3. BLACK VINYL, ARLON 2100-03, MIC BY OTHERS.
4. BREAKAWAY SWIVEL TOP.

ADDITIONAL NOTES:
- ARTWORK FONT: DUNKIN SANS DISPLAY
- 120 VOLT CIRCUIT, TO BE CONFIRMED BY SITE
- CLEARANCE TO BE CONFIRMED BY SITE
- TOP HAS TWO DOWN LIGHTS

NOTE:
SEE DUNKIN' BRANDS WEBSITE, http://extranet.dunkinbrands.com, FOR COMPLETE INFORMATION AND DETAILS

MULTIPLE PANEL DIGITAL MENU BOARDS

NOTES:
1. MENUBOARD IS POWDER COATED TO MATCH PMS 7540C (CABINET, BASE CLADDING, DOOR FRAMES & EXTENDER FRAMES).
2. SAMSUNG OHF SERIES DISPLAY MENUBOARDS, OHF55F - 55".

ADDITIONAL NOTES:
- ARTWORK FONT: DUNKIN SANS DISPLAY

NOTE:
SEE DUNKIN' BRANDS WEBSITE, http://extranet.dunkinbrands.com, FOR COMPLETE INFORMATION AND DETAILS

2 DRIVE THRU MENU BOARD AND SPEAKER CANOPY
SP1.0 SCALE: 1/4"=1'-0"

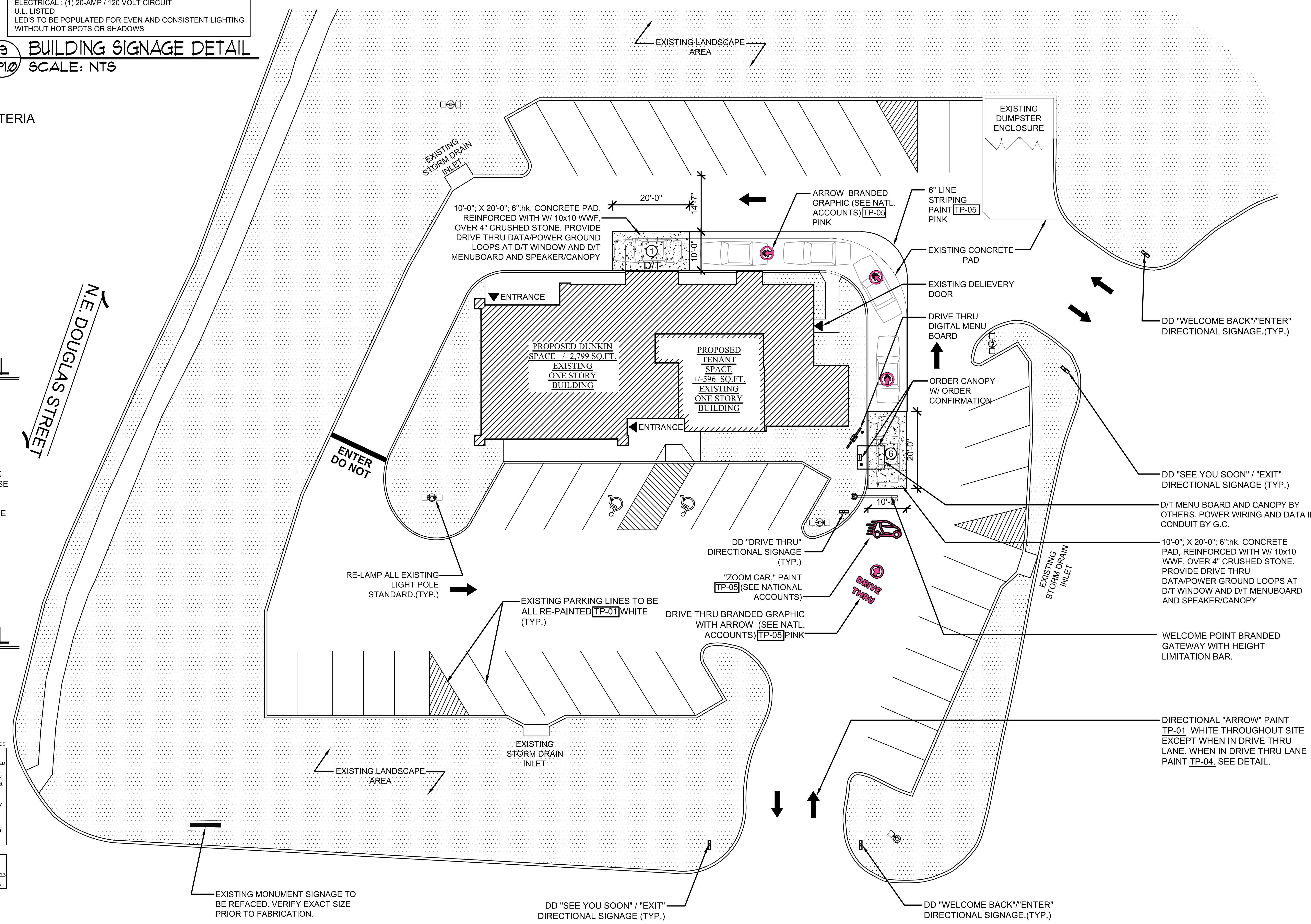

1 ARCHITECTURAL SITE PLAN
SP1.0 SCALE: 1/16"=1'-0"

PROJECT NORTH

ALBERT TAUS & ASSOCIATES, ARCHITECTS
ALBERT TAUS, A.I.A., ARCHITECT
ARCHITECTURE PLANNING INTERIOR DESIGN ENGINEERING
PHILADELPHIA, PA
PHONE: (215) 698-2516 FAX: (215) 698-7398
atausarchitects.com

THESE PLANS ARE THE PROPERTY OF ALBERT TAUS & ASSOCIATES, ARCHITECTS, AND ARE NOT TO BE USED WITHOUT THE EXPRESSED WRITTEN PERMISSION OR CONSENT OF ALBERT A. TAUS, R.A., A.I.A.

STATE OF MISSOURI
ALBERT A. TAUS
NUMBER A-2015032715
ARCHITECT
MO# A-2015032715
SIGNATURE

DOCUMENTS PREPARED FOR
DDJ21DOUGLAS, LLC
C/O: MR. HOSSAM SHAHIN
109 E. HALE LAKE RD
WARRENSBURG, MO 64093

ATA200602.10

DATE	04/29/21
SCALE	AS NOTED
DRAWN	GR
CKD	DJK
APPD	AAT

REVISIONS

NO	DESCRIPTION	DATE
–		
1		
2		
3		
4		
5		
6		

THESE PLANS ARE CONFIDENTIAL PROPERTY OF DUNKIN' BRANDS INC. UNDER RESTRICTED ACCESS.

PROPOSED PROJECT
DUNKIN'
WITH DRIVE THRU
1100 NE DOUGLAS STREET
LEE'S SUMMIT MO. 64086
NEXT GEN (COOL PALAETTE)
ARCHITECTURAL SITE PLAN

DUNKIN' BRANDS [eat drink think]

SP1.0

DEMOLITION SYMBOLS

- EXTERIOR WALL. PATCH & REPAIR WHERE NECESSARY. PREPARE FOR NEW SCHEDULED FINISH
- PARTITION WALL. PATCH & REPAIR. PREPARE FOR NEW SCHEDULED FINISH.
- NON BEARING PARTITION WALL TO BE REMOVED
- STOREFRONT WINDOW SYSTEM.
- STOREFRONT WINDOW SYSTEM INCLUDING FRAME TO BE REMOVED.
- DOOR AND FRAME
- DOOR INCLUDING FRAME TO BE REMOVED
- EXISTING ELECTRIC PANEL
- EXISTING GAS METER
- (TBR) TO BE REMOVED

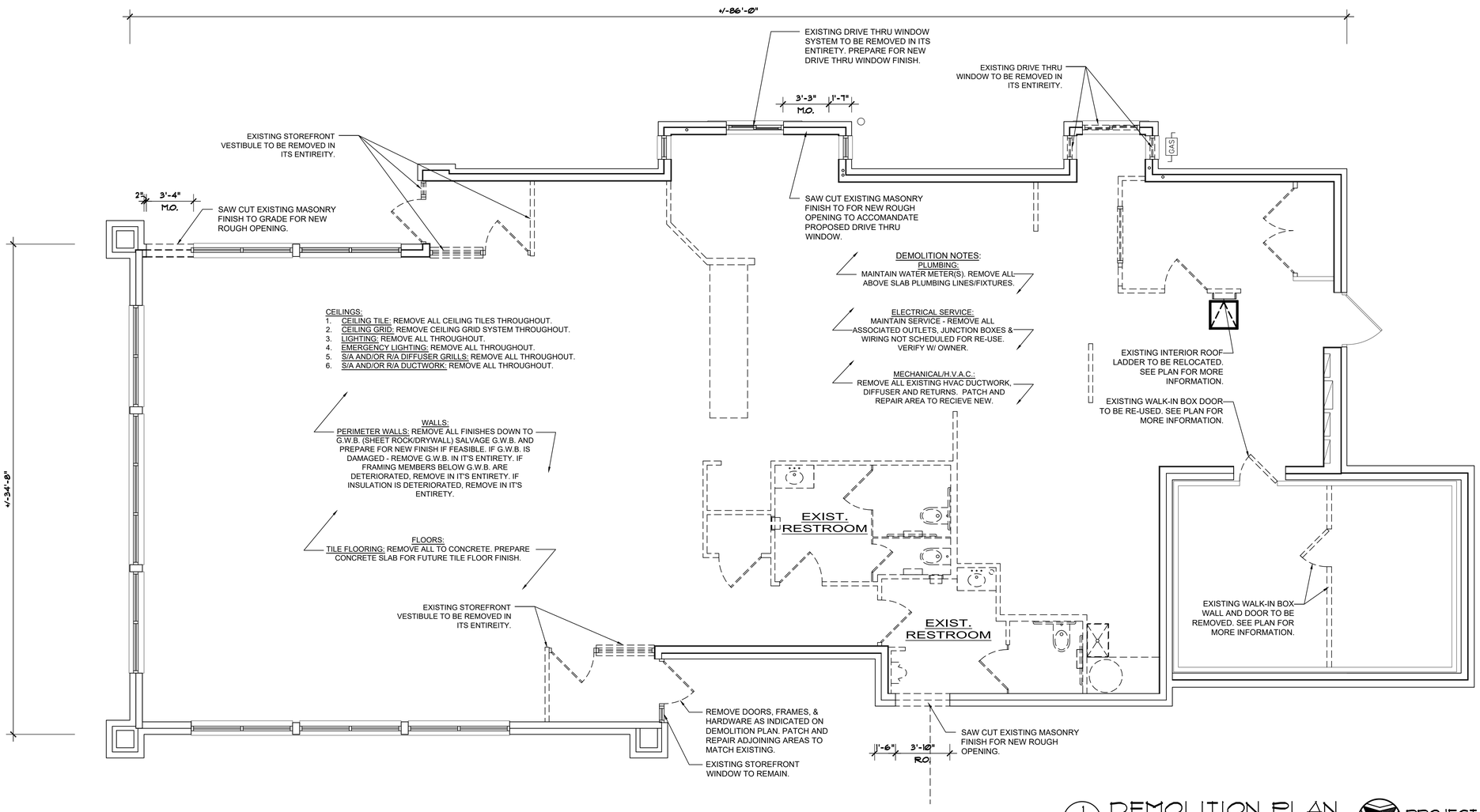

1 D1.0 DEMOLITION PLAN
SCALE: 1/4"=1'-0"

ALBERT TAUS & ASSOCIATES, ARCHITECTS
ALBERT TAUS, A.I.A., ARCHITECT
ARCHITECTURE PLANNING INTERIOR DESIGN ENGINEERING
PHONE: (215) 698-2516 FAX: (215) 698-7398
atausarchitects.com

THESE PLANS ARE THE PROPERTY OF ALBERT TAUS & ASSOCIATES, ARCHITECTS, AND ARE NOT TO BE USED WITHOUT THE EXPRESSED WRITTEN PERMISSION OR CONSENT OF ALBERT A. TAUS, R.A., A.I.A.

STATE OF MISSOURI
ALBERT A. TAUS
NUMBER A-2015032715
ARCHITECT
MO# A-2015032715
SIGNATURE

DOCUMENTS PREPARED FOR
DDJ21DOUGLAS, LLC
C/O: MR HOSSAM SHAHIN
109 E. HALE LAKE RD
WARRENSBURG, MO 64093
ATA200602.10

NO	DESCRIPTION	DATE
6		
5		
4		
3		
2		
1		

REVISIONS

DATE	04/29/21
SCALE	AS NOTED
DRAWN	GR
CKD	DJK
APPD	AAT

THESE PLANS ARE CONFIDENTIAL PROPERTY OF DUNKIN BRANDS, INC. UNDER RESTRICTED ACCESS.

PROPOSED PROJECT
DUNKIN'
WITH DRIVE THRU
1100 NE DOUGLAS STREET
LEE'S SUMMIT MO. 64086
NEXT GEN (COOL PALAETTE)
DEMOLITION FLOOR PLAN

DUNKIN' BRANDS [eat drink run]

D1.0

WALL TYPES

EXTERIOR

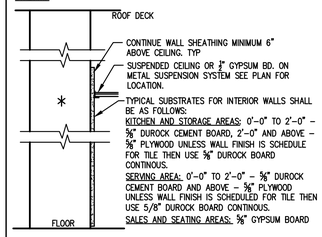

EX EXISTING WALL. INTERIOR FINISH AND FURRING IS NEW. VERIFY IN FIELD IF EXISTING GYPSUM BOARD, AND SHEATHING NEEDS TO BE REMOVED AND REPLACED. SEE PLANS FOR INTERIOR FINISH INFORMATION.

A EXTERIOR WALL INFILL WITH SIMILAR BUILDING MATERIALS WHERE NOTED INCLUDING BRICK TO MATCH EXISTING

* = VERIFY IN FIELD

INTERIOR

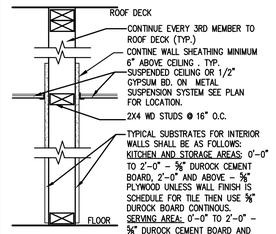

B PARTITION WALL

B1 6" WD. STUDS @ 16" O.C.. SEE TYPICAL SUBSTRATES ABOVE.

B2 PARTITION WALL (1) LAYER ⅝" G.W.B. ON 1–⅝" METAL STUDS @ 16" O.C. (20 GA.)

DOOR SCHEDULE

NO.	EXISTING NEW	DOOR DATA LOCATION	SIZE	MTRL	TYPE	FINISH INT/EXT	FRAME MTRL	FRAME TYPE	FINISH INT/EXT	NOTES
101	N	VEST. ENTRY #1	3'–0" x 6'–8" x 1¾"	ALUM/GL	A	NOTE 8	H.M.	1	NOTE 8	1,4,6,8
102	N	VEST. ENTRY #2	3'–0" x 6'–8" x 1¾"	ALUM/GL	A	NOTE 8	H.M.	1	NOTE 8	1,4,6,8
103	N	MEN'S RESTROOM	3'–0" x 6'–8" x 1¾"	WOOD	C	NOTE 7	H.M.	1	NOTE 7	2,4,6,7
104	N	WOMEN'S RESTROOM	3'–0" x 6'–8" x 1¾"	WOOD	C	NOTE 7	H.M.	1	NOTE 7	2,4,6,7
105	N	TRAINING ENTRY #2	3'–0" x 6'–8" x 1¾"	WOOD	C	NOTE 7	H.M.	1	NOTE 7	2,4,6,7
106	N	SIDE ENTRY	3'–0" x 6'–8" x 1¾"	ALUM/GL	A	NOTE 8	H.M.	1	NOTE 8	1,4,6,8
107	N	OFFICE	3'–0" x 6'–8" x 1¾"	WOOD	C	NOTE 7	H.M.	2	NOTE 7	2,4,5,6,7
108	E	REAR (DELIVERY)	EXISTING	EXIST.	EX	NOTE 8	EXIST.	EX.	NOTE 8	
109	N	TRAINING ENTRY #1	3'–6" x 7'–0" x 1¾"	ALUM/GL	A	NOTE 8	H.M.	1	NOTE 8	1,4,6,8

NOTES

1. 1" INSULATED & TEMPERED GLASS; FRAME TO MATCH STOREFRONT COLOR
2. UNDERCUT DOOR 1"
3. 190 DEGREE DOOR VIEWER CENTERED IN DOOR 5'–0" A.F.F. – MODEL SSVLAB FROM DAVSTAR
4. REFER TO DUNKIN' BRANDS SPECIFICATIONS FOR HARDWARE SCHEDULE FOR ALL DOORS
5. PROVIDE LOUVERED VENT @ EACH DOOR FOR UTILITY ROOM/CLOSET AND OFFICE.
6. ALL DOORS TO HAVE DOOR STOPS OR BUMPERS. SEE DUNKIN' BRAND SPECIFICATIONS.
7. SEE INTERIOR ELEVATIONS FOR MORE INFORMATION.
8. SEE EXTERIOR ELEVATIONS FOR MORE INFORMATION.

GENERAL-NOTES

1. PROVIDE ADEQUATE BLOCKING IN RESTROOMS FOR GRAB BARS, LAVATORIES, HAND DRYERS, MIRRORS, PAPER TOWEL DISPENSERS, SOAP DISPENSERS, AND OTHER ACCESSORIES AS REQUIRED UNLESS OTHERWISE NOTED.
2. DIMENSIONS SHOWN ARE TO THE FACE OF FINISH.
3. REFER TO EQUIPMENT "K" SHEETS FOR INFORMATION REGARDING THE EQUIPMENT AND EQUIPMENT LAYOUT.

DOOR/FRAME TYPES

NOT TO SCALE

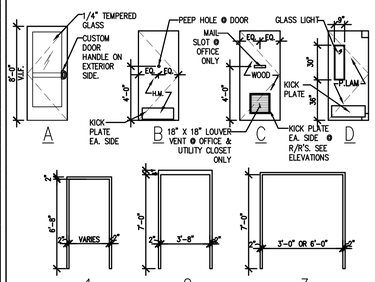

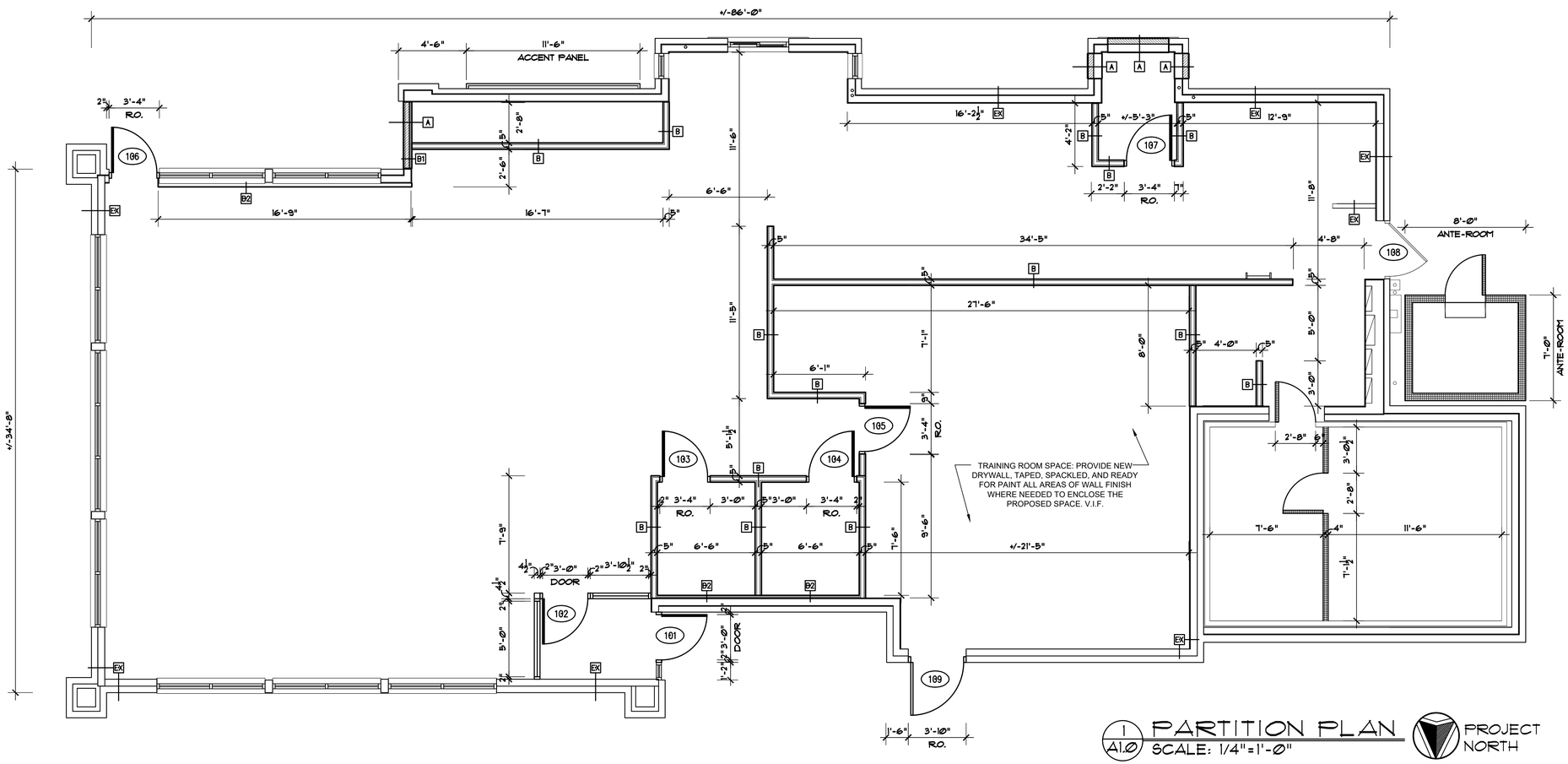

1 A1.0 PARTITION PLAN
SCALE: 1/4"=1'-0"

PROJECT NORTH

ALBERT TAUS & ASSOCIATES, ARCHITECTS
ALBERT TAUS, AIA, ARCHITECT
ARCHITECTURE PLANNING INTERIOR DESIGN ENGINEERING
P.O. BOX 1 LAFAYETTE HILL, PA
PHONE: (215) 828-2518 FAX: (215) 828-7388
atausarchitects.com

THESE PLANS ARE THE PROPERTY OF ALBERT TAUS & ASSOCIATES, ARCHITECTS, AND ARE NOT TO BE USED WITHOUT THE EXPRESSED WRITTEN PERMISSION OR CONSENT OF ALBERT A. TAUS, R.A., A.I.A.

STATE OF MISSOURI
ALBERT A. TAUS
NUMBER A-2015032715
ARCHITECT

MO# A-2015032715 SIGNATURE

DOCUMENTS PREPARED FOR
DDJ21DOUGLAS, LLC
C/o: MR HOSSAM SHAHIN
109 E. HALE LAKE RD
WARRENSBURG, MO 64093

ATA200802.10

	DATE	SCALE	DRAWN	CKD	APPD
	04/29/21	AS NOTED	GR	DJK	AAT

REVISIONS

NO.	DESCRIPTION	DATE
6		
5		
4		
3		
2		
1		
–		

THESE PLANS ARE CONFIDENTIAL PROPERTY OF DUNKIN' BRANDS INC. UNDER RESTRICTED ACCESS.

PROPOSED PROJECT
DUNKIN'
WITH DRIVE THRU
1100 NE DOUGLAS STREET
LEE'S SUMMIT, MO. 64086
NEXT GEN (COOL PALAETTE)

PARTITION PLAN

DUNKIN' BRANDS [serdrinkthink]

A1.0

ACCESSIBILTY-NOTES

THE GENERAL CONTRACTOR SHALL ACQUAINT HIMSELF WITH THE BARRIER FREE REQUIREMENTS FOR THE APPLICABLE STATES AND THE AMERICAN DISABILITIES ACT (ADA) AND SHALL ENSURE THAT THIS FACILITY WILL BE ACCESSIBLE ACCORDING TO THE STRICTER REQUIREMENTS OF THE APPLICABLE STANDARDS. THE FOLLOWING IS A PARTIAL LIST OF REQUIREMENTS.

1. DOOR HARDWARE SHALL BE MOUNTED BETWEEN 36" AND 42" ABOVE FLOOR AND BE LEVER TYPE.
2. TOILETS:

   A. LAVATORY TO HAVE LEVER HANDLES, SELF METERING FAUCETS OR SPRING FAUCET. FAUCETS SHALL BE SET TO REMAIN OPEN FOR 10 SECONDS MINIMUM.
   B. A COAT HOOK 48" ABOVE THE FLOOR SHALL BE MOUNTED ADJACENT TO THE BARRIER FREE STALL DOOR.
   C. LOCATE THE WATER CLOSET 16" TO 18" FROM THE CENTER LINE OF THE FIXTURE TO THE WALL. THE SEAT WILL BE 17" TO 19" ABOVE THE FLOOR TO THE TOP OF SEAT. FLUSH HANDLE TO BE ON EXPOSED SIDE OF WATER CLOSET.
   D. PROVIDE ONE 42" AND ONE 36" LONG x 1 1/2" OUTSIDE DIAMETER PEENED GRAB BARS, 1 1/2" FROM THE WALL WITH ONE BEHIND AT 12" FROM CENTER LINE OF WATER CLOSET ON ONE SIDE. ONE ADJACENT TO AT 12" FROM THE WALL 33"-36" PARALLEL TO AND ABOVE THE FLOOR.
   E. LAVATORY TO BE MOUNTED 34" MAX. ABOVE THE FINISHED FLOOR TO RIM WITH KNEE SPACE OF 30" IN WIDTH AND 27" IN CLEAR HEIGHT. (29" CLEAR UNDER FRONT EDGE)
   F. INSTALL MIRROR 40" MAX. ABOVE THE FINISHED FLOOR TO BOTTOM EDGE OF REFLECTING SURFACE (MIRROR GLASS BOTTOM) AND 72" TO TOP.
   G. DISPENSERS TO BE MOUNTED A MAXIMUM OF 42" ABOVE THE FLOOR TO ALL OPERATING OR DISPENSING SLOTS.
   H. TOILET PAPER DISPENSERS MOUNTED 19" MIN. TO CENTER LINE ABOVE THE FLOOR AND 7" MINIMUM AND 9" MAXIMUM FROM FRONT EDGE OF WATER CLOSET MEASURED TO THE CENTERLINE OF THE DISPENSER

PLAN-NOTES (#)

1. CASEWORK AND EQUIPMENT BY OTHERS. FINAL HOOK UP & START UP BY G.C.
2. REPLACE EXISTING DRIVE THRU WINDOW WITH NEW IN KIND. V.I.F.
3. EXISTING LADDER TO BE RELOCATED AS SHOWN. REVERSE SWING OF ROOF HATCH AS NECESSARY. V.I.F.
4. JANITOR'S SINK – PROVIDE DEDICATED WATER SUPPLY FOR P&G DISPENSER (SEE NATIONAL ACCOUNTS). P&G EQUIPMENT INSTALLED BY VENDOR– SEE DETAIL PLUMBING PLANS FOR MORE INFORMATION
5. RECESS MOUNT HAND DRYER; REFER TO RESTROOM EQUIPMENT SCHEDULE FOR SPECIFICATIONS AND RESTROOM ACCESSIBILITY DETAILS FOR MOUNTING HEIGHTS.
6. P.O.S. OUTLET BOX (48" A.F.F.) WITH ½" CONDUIT W/ PULLSTRING TO CEILING
7. RECESSED TRASH RECEPTACLE. SEE RESTROOM EQUIPMENT SCHEDULE FOR SPECIFICATIONS AND RESTROOM ACCESSIBILITY DETAIL FOR MOUNTING HEIGHT.
8. ~~CONC-FILLED STEEL BOLLARD – SEE DETAIL PLANS FOR MORE INFORMATION. PROVIDE BOLLARD COVER BY IDEAL SHIELD OR APPROVED EQUAL PER DUNKIN BRANDS SPECIFICATIONS. SEE NATIONAL ACCOUNTS ON EXTRANET FOR MORE INFORMATION.~~
9. 3 COMPARTMENT SINK W/ 2 INTEGRATED DRAIN BOARDS– PROVIDE DEDICATED WATER SUPPLY FOR P&G DISPENSER (SEE NATIONAL ACCOUNTS). P&G EQUIPMENT INSTALLED BY VENDOR– SEE DETAIL PLUMBING PLANS FOR MORE INFORMATION.
10. EXISTING FROST PROOF HOSE BIB.
11. 1-1/2" X 1-1/2" "BRUSHED SILVER" ACROVYN 4000 SERIES CORNER GUARDS, FLOOR TO CEILING HEIGHT (TYPICAL THROUGHOUT SERVICE AREA).
12. PROVIDE DIRECT LINE W/ TEMPERATURE REGULATOR VALVE FROM WATER HEATER TO ALL HAND WASHING SINKS.
13. ~~EXTERIOR DOWNSPOUT. SEE ROOF PLANS AND EXTERIOR ELEVATIONS FOR MORE INFORMATION.~~
14. G.C. TO PROVIDE ANCHOR BOLTS FOR SLAB MOUNTED SAFE IN OFFICE– VERIFY EQUIPMENT SPECIFICATIONS WITH FRANCHISEE.
15. PROVIDE CONCRETE PAD AT WALK-IN BOX ANTE-ROOM.
16. PROVIDE CLEAR ANODIZED ALUM EDGE TRIM (SCHLUTER "JOLLY") FOR FULL HEIGHT OF WALL @ EXTERNAL CORNERS AND ALL LOCATIONS WHERE TILE AREA.
17. MILLWORK SUPPLIER SHALL PROVIDE ACCESS FOR UTILITIES & CLEANING AT ALL FRONT LINE MILLWORK.
18. DESK AND SHELVING. SEE OFFICE ELEVATIONS AND DETAILS FOR MORE INFORMATION.
19. WALL FINISH TO BE FRP–01 UNLESS NOTED OTHERWISE.
20. WALL ART. PURCHASED BY FRANCHISEE, INSTALLED BY G.C.

ARCHITECTURAL SYMBOLS

- EXTERIOR WALL. SEE EXTERIOR ELEVATIONS FOR FINISH SCHEDULE. SEE WALL TYPES & SECTIONS.
- PARTITION WALL. SEE INTERIOR ELEVATIONS FOR FINISH SCHEDULE. SEE WALL TYPES AND SECTIONS.
- CLEAR ANODIZED ALUMINUM STOREFRONT SYSTEM
- DOOR. SEE DOOR SCHEDULE FOR MORE INFORMATION.
- EXISTING DOOR AND FRAME
- FIRE EXTINGUISHER. TYPE ABC
- EXISTING ELECTRICAL PANEL
- ELECTRICAL METER. SEE ELECTRICAL PLANS FOR MORE INFORMATION.
- WATER METER. SEE CIVIL PLANS AND PLUMBING PLANS FOR MORE INFORMATION.
- WATER FILTRATION SYSTEM. SEE PLUMBING PLANS FOR MORE INFORMATION.

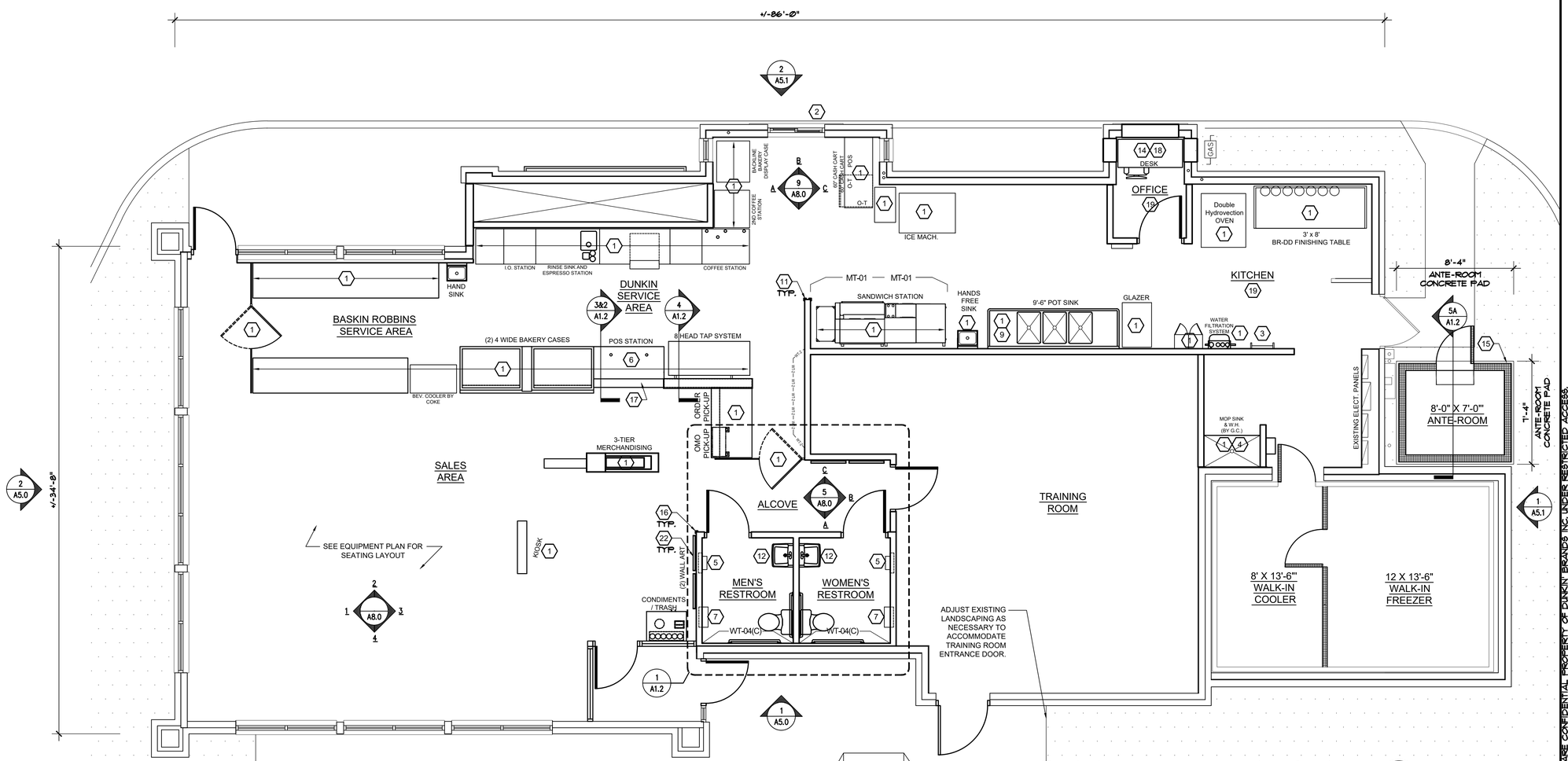

ALBERT TAUS & ASSOCIATES, ARCHITECTS
ALBERT TAUS, AIA, ARCHITECT
ARCHITECTURE PLANNING INTERIOR DESIGN ENGINEERING
P H I L A D E L P H I A
PHONE: (215) 898-2518 FAX: (215) 898-7398
atausarchitects.com

THESE PLANS ARE THE PROPERTY OF ALBERT TAUS & ASSOCIATES, ARCHITECTS, AND ARE NOT TO BE USED WITHOUT THE EXPRESSED WRITTEN PERMISSION OR CONSENT OF ALBERT A. TAUS, R.A., A.I.A.

STATE OF MISSOURI
ALBERT A. TAUS
NUMBER
A-2015032715
ARCHITECT
MO# A-2015032715
SIGNATURE

DOCUMENTS PREPARED FOR
DDU21DOUGLAS, LLC
C/O: MR. HOSSAM SHAHIN
109 E. HALE LAKE RD
WARRENSBURG, MO 64093
ATA200602.10

DATE	04/29/21
SCALE	AS NOTED
DRAWN	GR
CKD	DJK
APPD	AAT

NO	DESCRIPTION	DATE
6		
5		
4		
3		
2		
1		
–		

REVISIONS

THESE PLANS ARE CONFIDENTIAL PROPERTY OF DUNKIN' BRANDS INC. UNDER REPRODUCTION ACCESS

PROPOSED PROJECT
DUNKIN'
WITH DRIVE THRU
1100 NE DOUGLAS STREET
LEE'S SUMMIT MO. 64086
NEXT GEN (COOL PALAETTE)

FLOOR PLAN

DUNKIN' BRANDS [eat drink think]

A1.1

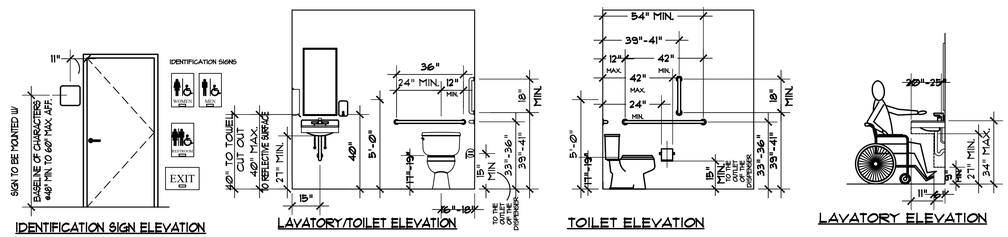

7 / A1.2 RESTROOM ACCESIBILITY DETAILS
SCALE: 1/4" = 1'-0"

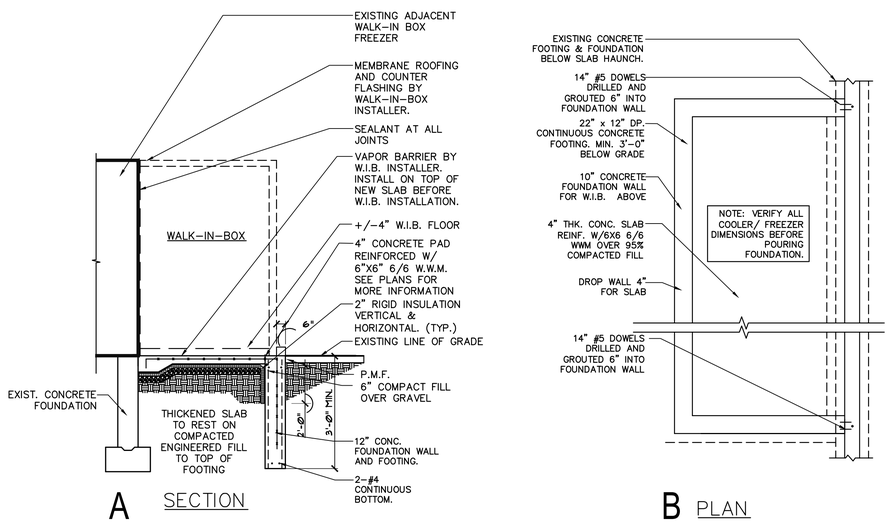

5 / A1.2 WALK-IN-BOX - PLAN
SCALE: NOT TO SCALE

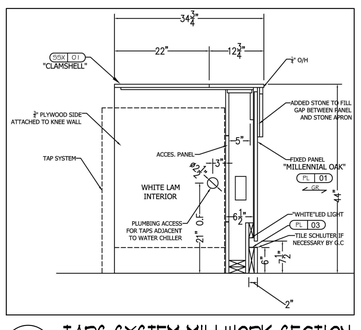

4 / A1.2 TAPS SYSTEM MILLWORK SECTION
SCALE: NOT TO SCALE

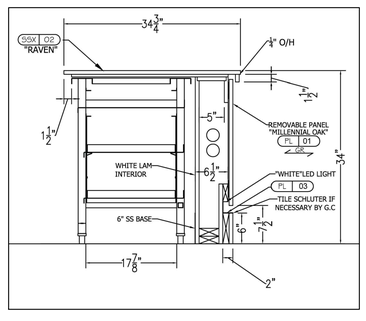

3 / A1.2 OTG ORDER PICK-UP SECTION
SCALE: NOT TO SCALE

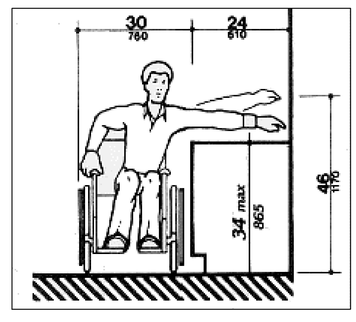

2 / A1.2 ADA BARRIER FREE PULL-UP COUNTER
SCALE: NOT TO SCALE

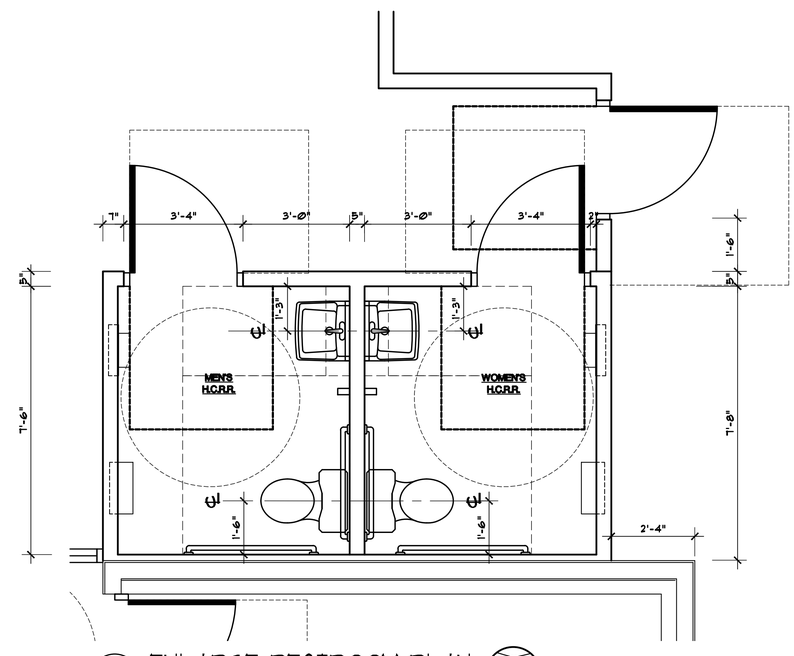

1 / A1.2 ENLARGE RESTROOM PLAN
SCALE: 1/4"=1'-0"

ALBERT TAUS & ASSOCIATES, ARCHITECTS
ALBERT TAUS, AIA, ARCHITECT
ARCHITECTURE PLANNING INTERIOR DESIGN ENGINEERING
PHILADELPHIA, PA
PHONE: (215) 898-2518 FAX: (215) 898-7398
atausarchitects.com

THESE PLANS ARE THE PROPERTY OF ALBERT TAUS & ASSOCIATES, ARCHITECTS, AND ARE NOT TO BE USED WITHOUT THE EXPRESSED WRITTEN PERMISSION OR CONSENT OF ALBERT A. TAUS, R.A., A.I.A.

STATE OF MISSOURI
ALBERT A. TAUS
NUMBER A-20150327 15
ARCHITECT
MO# A-20150327 15
SIGNATURE

DOCUMENTS PREPARED FOR
DDJ21DOUGLAS, LLC
C/o: MR HOSSAM SHAHIN
109 E HALE LAKE RD
WARRENSBURG, MO 64093

ATA200602.10

	DATE	SCALE	DRAWN	CKD	APPD
	04/29/21	AS NOTED	GR	DJK	AAT

NO	DESCRIPTION	DATE
6		
5		
4		
3		
2		
1		
–		

REVISIONS

THESE PLANS ARE CONFIDENTIAL PROPERTY OF DUNKIN' BRANDS INC. UNDER RESTRICTED ACCESS

PROPOSED PROJECT
DUNKIN'
WITH DRIVE THRU
1100 NE DOUGLAS STREET
LEE'S SUMMIT MO. 64086
NEXT GEN (COOL PALAETTE)

ENLARGED RR PLAN AND DETAILS

DUNKIN' BRANDS [eat drink KINDNESS]

A1.2

MUSIC SYSTEM NOTES

1) STEREO RECEIVER, SPEAKERS & SPEAKER PROVIDED BY OWNER, INSTALLED BY GC.

2) ALL CEILING SPEAKERS TO BE FLUSH MOUNTED.
SALES AREA: FINISH BLACK
VESTIBULE/ RESTROOMS: FINISH WHITE

3) MINIMUM QUANTITIES:
SALES AREA: (2)
RESTROOMS: (1) IN EACH
VESTIBULE: (1)

4) HARDWARE TO BE INSTALLED IN THE OFFICE. FIELD VERIFY AND COORDINATE WITH FRANCHISEE FOR THE EXACT LOCATION OF THE UNIT AND VOLUME CONTROLS. PROVIDE SEPARATE VOLUME CONTROLS FOR EA AREA.

5) CONTACT DUNKIN' BRANDS RECOMMENDS FOR MUSIC & SYSTEM SUPPLIER CONTACT INFO.

MECHANICAL/HVAC NOTES

1. PROVIDE GAS FIRED HVAC SPLIT SYSTEMS (WITH THE INSTALLATION OF A NEW GAS SERVICE) AND LOCATION THE AHU'S IN THE ATTIC SPACE TO MATCH SIMILAR EXISTING CONDITION LOCATIONS.
2. PROVIDE CONDENSER UNITS (CU'S) TO MATCH SIMILAR EXISTING CONDITION LOCATIONS.
3. SEE MECHANICAL PLANS FOR MORE INFORMATION.

(#) KEY PLAN NOTES

1. GYPSUM WALL BOARD CEILING AND/OR SOFFIT.
2. HOT AIR CAPTURE EXHAUST HOOD FOR OVEN AND SANDWICH STATION BY GENERAL CONTRACTOR. PROVIDE A HEAT SENSOR OR OTHER DEVICE TO ENSURE THE AUTOMATIC OPERATION OF THE KITCHEN HOOD SYSTEMS UPON ACTIVATION OF THE COOKING DEVICES. PROVIDE A HEAT SENSOR OR OTHER DEVICE TO INSURE THE AUTOMATIC OPERATION OF THE KITCHEN HOOD SYSTEMS UPON ACTIVATION OF THE COOKING DEVICES.
3. "B" VENT FLUE FOR WATER HEATER.
4. DIGITAL MENU BOARDS (NOT SHOWN). SEE INTERIOR ELEVATIONS FOR MORE INFORMATION. COORDINATE EXACT POSITIONING AND LOCATION WITH DMB SUPPLIER. SEE ELECTRICAL PLANS AND INTERIOR ELEVATIONS FOR MORE INFORMATION. ALIGN WITH POS STATION AT FRONT LINE – MAINTAIN 2" CLEAR ON EACH END SO THE UNITS ARE ALLOWED TO VENT PROPERLY.
5. CANOPY. SEE EXTERIOR ELEVATIONS FOR MORE INFORMATION.
6. WIRE ALL NEW LIGHTING TO EXISTING ELECTRICAL PANEL AND PROVIDE SWITCH TO OPERATE IN EXISTING SWITCH BANK VERIFY LOCATION IN FIELD. TYPICAL FOR ALL LIGHT FIXTURES.
7. WALL WASH "A" LIGHTS TO BE CENTERED ON "LROD" PANEL ARTWORK. MOUNTED FLUSH WITH FINISH CEILING HEIGHT. SEE PLAN FOR CEILING HEIGHTS AND SEE INTERIOR ELEVATIONS FOR EXACT WALL LOCATION.
8. **NOT USED**
9. ORANGE LIGHT BAR MOUNTED AT 8'-7"A.F.F. TO BE CENTERED ABOVE CASEWORK BELOW. MOUNT SPECIFICATIONS VARY PER CEILING HEIGHT. SEE PLANS FOR MORE INFORMATION.
10. PROVIDE SUSPENDED ACOUSTICAL CLG. GRID THROUGHOUT ALL DROP CEILING AREAS (SEE PLANS). SEE CEILING FINISH SCHEDULE FOR MORE INFORMATION.(TYP)
11. **NOT USED**
12. EXISTING WALK-IN LIGHTS. SEE PLAN FOR MORE INFORMATION.
13. PROVIDE MOTION SENSOR TO ACTIVATE LIGHTING IN RESTROOM & OFFICE.
14. AIR CURTAIN. USE MARS LPV248-1EE6-OB, FINISH BLACK W/ DOOR SWITCH AT DELIVERY DOOR AND DRIVE THRU WINDOW. FURNISHED & INSTALLED BY CONTRACTOR. (HEATED MODEL W/ HEAT ON/OFF SWITCH) OR APPROVED EQUAL.
15. **NOT USED**
16. TRACK LIGHTING TO CENTERED ABOVE ARTWORK.

CEILING LEGEND

- 2x4 LAY-IN LIGHT FIXTURE W/ OVERLAY (TYP.)
- 2x2 LAY-IN LIGHT FIXTURE W/ OVERLAY (TYP.)
- R1 — LED RECESSED LIGHT FIXTURE
- TRACK LIGHT
- A — WALL WASH FIXTURE
- LED 2 — EXTERIOR LINEAR LED FIXTURE USED UNDER ORANGE BAND/CANOPY
- WSCX-2 — EXTERIOR WALL MTD LIGHT
- R4 — ORANGE LIGHT BAR FIXTURE
- P1 — INTERIOR LINEAR LED FIXTURE
- LED 11 — EXTERIOR LINEAR LED FIXTURE USED ABOVE ORANGE BEAM/ CANOPY
- LED 12 — EXTERIOR LINEAR LED FIXTURE USED ON TOP OF LOWER MONOLITH BAND
- EXTERIOR WALL PACK LIGHT
- N/L — NIGHT LIGHT
- MS — WALL MOUNTED MOTION SENSOR
- J — JUNCTION BOX
- DUSK TO DAWN TIMER
- TIME CLOCK ON/OFF
- INTERIOR FLUSH CEILING SPEAKER
- S — EXTERIOR SPEAKER
- V — ADJUSTABLE SPEAKER VOLUME CONTROLS
- EBU-W — EMERGENCY REMOTE HEADS
- EBU-B — EMERGENCY REMOTE HEADS USED ON WT-02 WALL ONLY (BLACK)
- EMR — EMERGENCY REMOTE HEAD.
- EX1 — COMBO EXIT
- GYPSUM BOARD CEILING
- 2'x4' SUSPENDED CEILING GRID SYSTEM WITH 2' x 4' LAY-IN ACOUSTICAL CEILING TILES
- 2'x2' SUSPENDED CEILING GRID SYSTEM WITH 2' x 2' LAY-IN ACOUSTICAL CEILING TILES
- FLUE
- RETURN/CEILING EXHAUST REGISTER. SEE MECHANICAL PLANS FOR MORE INFORMATION.
- SUPPLY AIR DIFFUSER-4 WAY. SEE MECHANICAL PLANS FOR MORE INFORMATION.
- EF-1 — EXHAUST FAN FOR HOT AIR CAPTURE HOOD(S). SEE ELECTRICAL PLANS, MECHANICAL PLANS AND FAN SCHEDULE FOR MORE INFORMATION.
- EF-2 — EXHAUST FAN FOR HOT AIR CAPTURE HOOD(S). SEE ELECTRICAL PLANS, MECHANICAL PLANS AND FAN SCHEDULE FOR MORE INFORMATION.
- EF-3 — EXHAUST FAN FOR RESTROOM(S). SEE ELECTRICAL PLANS, MECHANICAL PLANS AND FAN SCHEDULE FOR MORE INFORMATION.

LIGHTING SCHEDULE

CODE	DESCRIPTION	MANUFACTURER	PRODUCT
A	WALL-WASH FIXTURE- TO BE USED AT ARTWORK AND LROD SIGN	CONTECH	RL20SA3-35K-12-D/ CTR2002CLR-P
B	PROVIDED BY WALK-IN BOX MANUF.	VARIES	VARIES
C	TRACK LIGHT & HEAD- USED @ WALL W/ ART WORK AND WHERE	JUNO	R600L-35K-BL
EBU-W	ULTRA COMPACT LED EMERGENCY UNIT (WHITE)	EXITRONIX	EBU-W-LED-51-S2
EBU-B	ULTRA COMPACT LED EMERGENCY UNIT- USED ON WT-02 WALL ONLY (BLACK)	EXITRONIX	EBU-BL-LED-51-S2
EMR	EXTERIOR COMBO LED REMOTE EXIST LIGHT HEAD- USED ABOVE OR ADJACENT TO EXIT DOORS (GRAY)	EXITRONIX	TYPE EMR EXITRONIX MLED-2-G-WP
EWS-1	WALL PACK (GRAY) EXTERIOR- USED ON DARK WALL FINISH	WAC	WP-LED227-30-AWK-GRAY
EWS-2	WALL PACK (WHITE) EXTERIOR- USED ON LIGHT WALL FINISH	WAC	WP-LED227-30-AWK-WHITE
EX1	COMBO LED EXIT SIGN W/ LIGHT HEADS (WHITE)	EXITRONIX	VEX-U-BP-WB-WH-EL90
BL	BATHROOM SCONCE	SEAGULL	49170
LED 2	EXTERIOR RECESSED LIGHT FIXTURE- USED UNDER ORANGE BEAM/ CANOPY	DMF	DMF-DRDH-R-4/ DRD2M-10-9-40/ DRD2T-R-4-S-W
LED 11	EXTERIOR LIGHT FIXTURE- USED ABOVE ORANGE BEAM/ CANOPY	SOLID STATE LUMINARIES SOLUTIONS OF LIGHTING	LSSL-5165-N
LED 12	EXTERIOR LIGHT FIXTURE- USED ON TOP OF LOWER MONOLITH BAND	SOLID STATE LUMINARIES SOLUTIONS OF LIGHTING	SSL-LSSL-5165-400 LUMENS
OC	WALL MOUNTED OCCUPANCY SENSOR	WATTSTOPPER	WS-250-W
P1	8' SUSPENDED LINEAR LIGHT FIXTURE- USED IN SEATING/ SALES AREA	TEXAS FLUORESCENTS	SES-FR-96L-S62W8200L-DMV-35K-BK
P2	4' SUSPENDED LINEAR LIGHT FIXTURE- USED IN SEATING/ SALES AREA	TEXAS FLUORESCENTS	SES-FR-48L-S62W3100L-DMV-35K-BK
P3	PENDANT CHANDELIER- USED ABOVE COMMUNITY TABLE	TECH LIGHTING	700TD-ALVPMC-BB-LED90
PKL3	PARKING LOT LIGHTING	COOPER LIGHTING	LUMARK PRV-PREVAIL PRV-A40-UNV-T3-SA-BZ
PKL4	PARKING LOT LIGHTING	COOPER LIGHTING	LUMARK PRV-PREVAIL PRV-A40-UNV-T4-SA-BZ
R1	RECESSED LED LIGHT FIXTURE	HALO	PD620-D010-B/ PDM6B835/ 61VCWF
R2	2X2 LAY-IN TROFFER LED LIGHT FIXTURE, USED IN FRONT OF HOUSE	CREE	CR22-32L35K-S-EB14
R3	4' LED ADJ DOWNLIGHT, 400K, 200 LUMEN	NORA	NCH-436-L20-40-D-SF
R4	LED LINEAR LIGHT BAR- USED ABOVE FRONT LINE	PINNACLE ARCHITECTURAL LIGHTING	EX33A-35HO-XX-AC48JB-120-1C-CC-PMS165
R5	2X4 LAY-IN LED LIGHT FIXTURE, USED IN BACK OF HOUSE	LSI	SFP24-LED30-UE-DIM-35
R6	2X2 LAY-IN LED LIGHT FIXTURE, USED OVER SERVICE AREA - REMODELS ONLY	LSI	SFP22-LED30-UE-DIM-35
R7	2X4 LAY-IN TROFFER LED LIGHT FIXTURE, USED IN FRONT OF HOUSE - REMODELS ONLY	LSI	ELFP24 2X4
WSCX-2	EXTERIOR SIGN LIGHT FIXTURE - USED AT ACCENT PANELS	HI-LITE MFG INC.	H-HDMR16/18-1-119/ MR16AD1C293010T-10-S1

LIGHTING SCHEDULE NOTES

1. PROVIDE ALL FIXTURES COMPLETE WITH LAMPS. REFER TO NATIONAL ACCOUNT SOURCE INFO FOR LAMP SPECS & VILLA LIGHTING RE-LAMPING PROGRAM.
2. ALL BALLASTS SHALL BE HIGH POWER FACTOR.
3. PROVIDE HOLD-DOWN CLIPS FOR EACH CORNER OF FLUORESCENT GRID TROFFERS.
4. COORDINATE AND VERIFY ALL FIXTURE INFORMATION, TYPES AND FINAL LOCATIONS WITH THE REFLECTED CEILING PLAN.
5. LAMPS SHALL BE AS MANUFACTURED BY SYLVANIA, WESTINGHOUSE, GENERAL ELECTRIC OR APPROVED EQUAL.

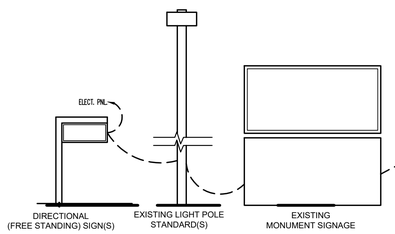

V.I.F. SEE SITE PLAN DRAWINGS FOR MORE INFORMATION AND EXACT QUANTITY AND LOCATION

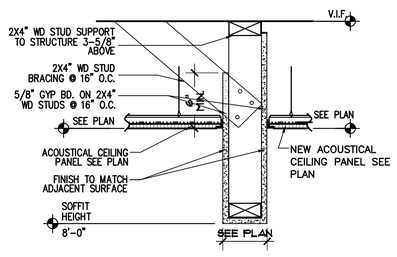

3 A2.0 HEADER DETAIL
SCALE: NOT TO SCALE

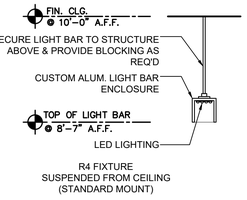

2 A2.0 LIGHT BAR DETAIL - R4
SCALE: NOT TO SCALE

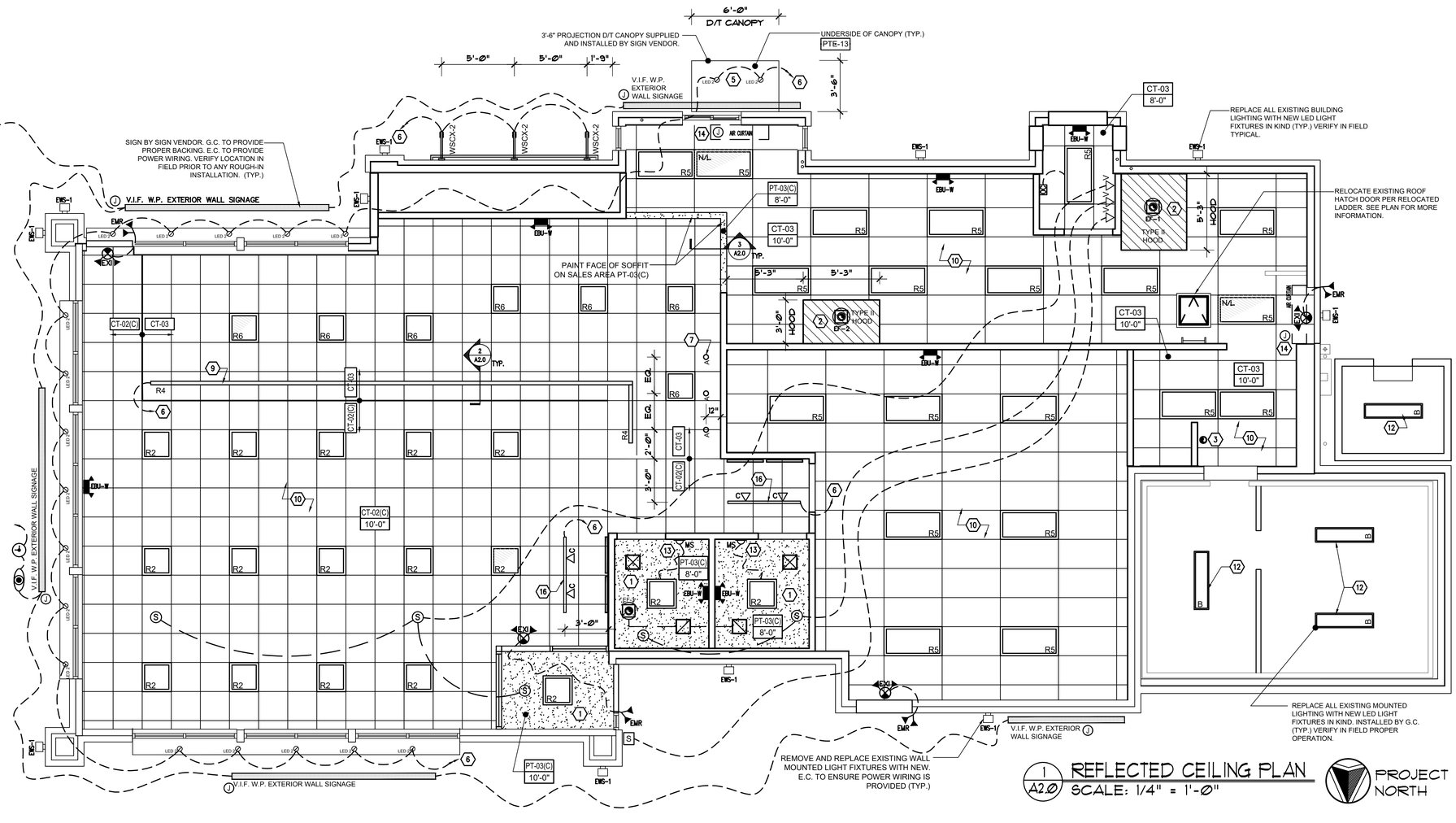

1 A2.0 REFLECTED CEILING PLAN
SCALE: 1/4" = 1'-0"

ALBERT TAUS & ASSOCIATES, ARCHITECTS
ALBERT TAUS, AIA, ARCHITECT
ARCHITECTURE PLANNING INTERIOR DESIGN ENGINEERING
PHONE: (215) 888-2518 FAX: (215) 888-7388
atausarchitects.com

THESE PLANS ARE THE PROPERTY OF ALBERT TAUS & ASSOCIATES, ARCHITECTS, AND ARE NOT TO BE USED WITHOUT THE EXPRESSED WRITTEN PERMISSION OR CONSENT OF ALBERT A. TAUS, R.A., A.I.A.

STATE OF MISSOURI — ALBERT A. TAUS — NUMBER A-2015032715 — ARCHITECT

MO# A-2015032715 SIGNATURE

DOCUMENTS PREPARED FOR
DDJ21DOUGLAS, LLC
C/o: MR HOSSAM SHAHIN
109 E. HALE LAKE RD
WARRENSBURG, MO 64093

ATA200602.10

NO	DESCRIPTION	DATE	APPD
6			
5			
4			
3			
2			
1			
–			

REVISIONS

DATE	04/29/21
SCALE	AS NOTED
DRAWN	GR
CKD	DJK
APPD	AAT

THESE PLANS ARE CONFIDENTIAL PROPERTY OF DUNKIN' BRANDS INC. UNDER RESTRICTED ACCESS.

PROPOSED PROJECT
DUNKIN' WITH DRIVE THRU
1100 NE DOUGLAS STREET
LEE'S SUMMIT MO. 64086
NEXT GEN (COOL PALAETTE)

REFLECTED CEILING PLAN

DUNKIN' BRANDS [eat drink run]

A2.0

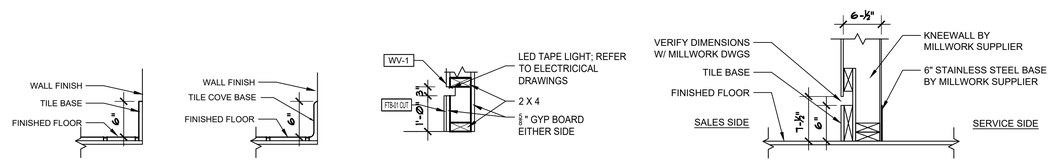

TYPE "A"
CUSTOMER AREAS

TYPE "B"
SERVICE AREAS AND KITCHEN

TYPE "C"
LED BASE DETAIL

TYPE "D"
CASEWORK
SERVICE AREAS AND PUBLIC AREAS

2 / A3.0 TILE BASE DETAILS
SCALE: NOT TO SCALE

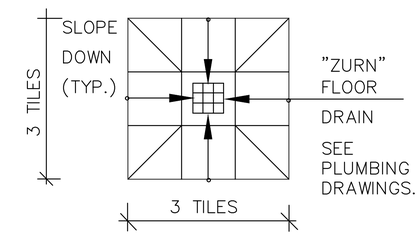

3 / A3.0 TYPICAL DRAIN AND TILE DETAIL
SCALE: NOT TO SCALE

NOTE #1:
FLOOR SINKS & FLOOR DRAINS ARE NOT SHOWN ON FLOOR FINISH PLAN. COORDINATE WITH PLUMBING PLAN FOR MORE INFORMATION.

NOTE #2:
STANDING WATER WILL NOT BE ACCEPTED IN THE SERVICE AREA, KITCHEN, OR RESTROOMS

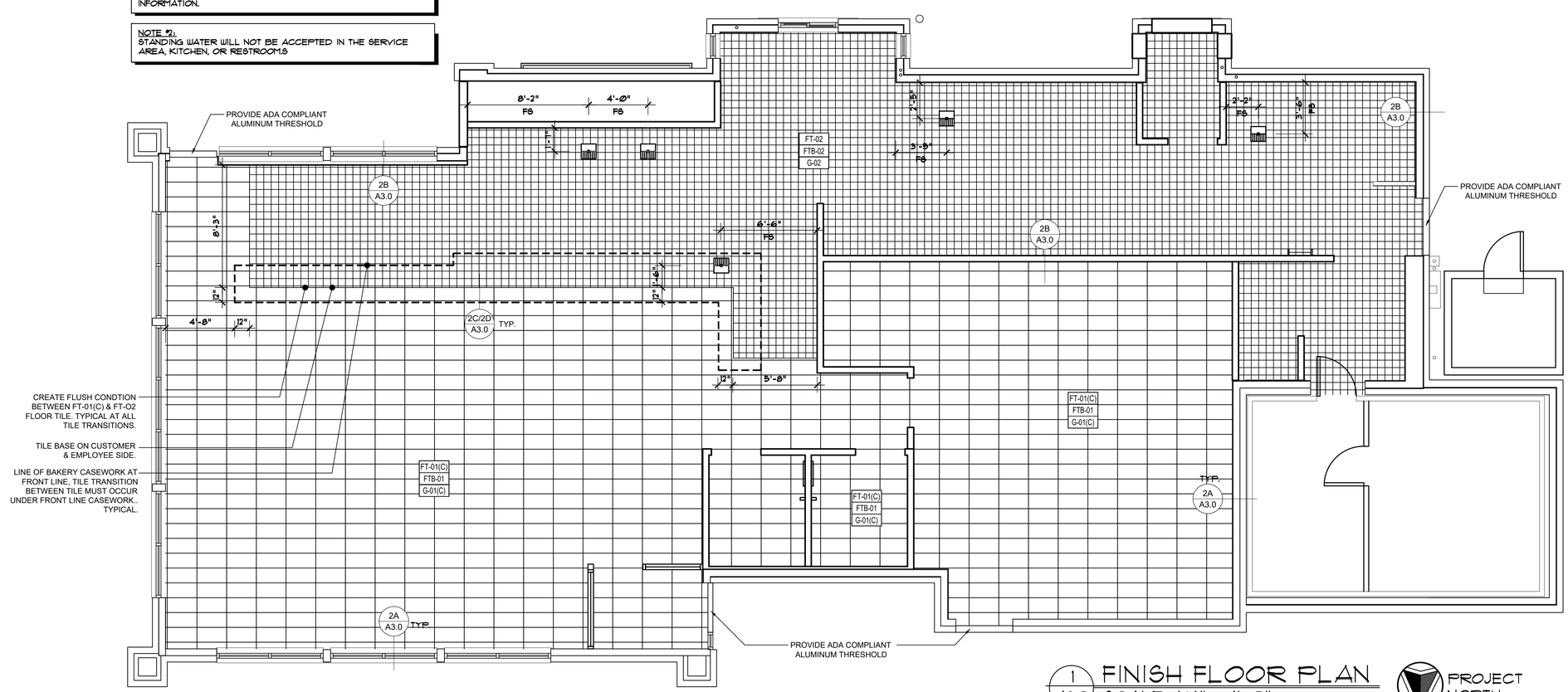

1 / A3.0 FINISH FLOOR PLAN
SCALE: 1/4" = 1'-0"

PROJECT NORTH

ALBERT TAUS & ASSOCIATES, ARCHITECTS
ALBERT TAUS, A.I.A., ARCHITECT
ARCHITECTURE PLANNING INTERIOR DESIGN ENGINEERING
PHILADELPHIA, PA
PHONE: (215) 698-2516 FAX: (215) 698-7398
atausarchitects.com

THESE PLANS ARE THE PROPERTY OF ALBERT TAUS & ASSOCIATES, ARCHITECTS, AND ARE NOT TO BE USED WITHOUT THE EXPRESSED WRITTEN PERMISSION OR CONSENT OF ALBERT A. TAUS, R.A., A.I.A.

STATE OF MISSOURI
ALBERT A. TAUS
NUMBER A-2015032715
ARCHITECT
MO# A-2015032715
SIGNATURE

DOCUMENTS PREPARED FOR
DDJ21DOUGLAS, LLC
C/o: MR. HOSSAM SHAHIN
109 E. HALE LAKE RD
WARRENSBURG, MO 64093
ATA200602.10

NO	DESCRIPTION	DATE
6		
5		
4		
3		
2		
1		
–		

REVISIONS

DATE	04/29/21
SCALE	AS NOTED
DRAWN	GR
CKD	DJK
APPD	AAT

PROPOSED PROJECT
DUNKIN'
WITH DRIVE THRU
1100 NE DOUGLAS STREET
LEE'S SUMMIT MO. 64086
NEXT GEN (COOL PALAETTE)
FINISH FLOOR PLAN

DUNKIN' BRANDS
[eatdrinkthink]
A3.0

THESE PLANS ARE CONFIDENTIAL PROPERTY OF DUNKIN' BRANDS INC. UNDER RESTRICTED ACCESS.

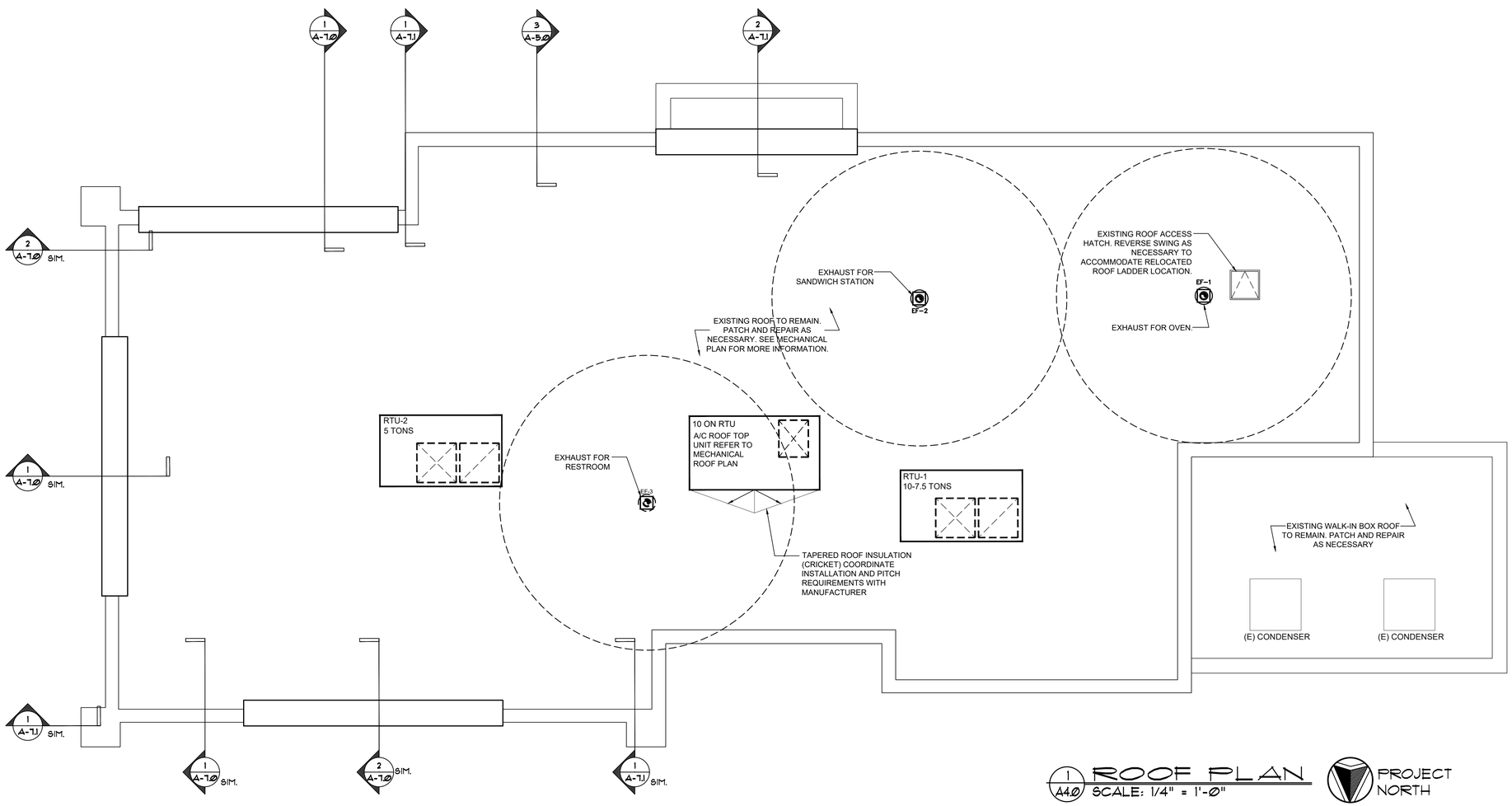

1 A4.0 ROOF PLAN
SCALE: 1/4" = 1'-0"

PROJECT NORTH

ALBERT TAUS & ASSOCIATES, ARCHITECTS
ALBERT TAUS, AIA, ARCHITECT
ARCHITECTURE PLANNING INTERIOR DESIGN ENGINEERING
PHILADELPHIA PA
PHONE: (215) 888-2518 FAX: (215) 888-7388
atausarchitects.com

THESE PLANS ARE THE PROPERTY OF ALBERT TAUS & ASSOCIATES, ARCHITECTS, AND ARE NOT TO BE USED WITHOUT THE EXPRESSED WRITTEN PERMISSION OR CONSENT OF ALBERT A. TAUS, R.A., A.I.A.

STATE OF MISSOURI
ALBERT A. TAUS
NUMBER
A-2015032715
ARCHITECT

MO# A-2015032715

SIGNATURE

DOCUMENTS PREPARED FOR
DDJ21DOUGLAS, LLC
C/O: MR. HOSSAM SHAHIN
109 E. HALE LAKE RD
WARRENSBURG, MO 64093

ATA200602.10

	DATE	04/29/21
	SCALE	AS NOTED
	DRAWN	GR
	CKD	DJK
	APPD	AAT

NO	DESCRIPTION	DATE
6		
5		
4		
3		
2		
1		
–		

REVISIONS

THESE PLANS ARE CONFIDENTIAL PROPERTY OF DUNKIN' BRANDS INC. UNDER RESTRICTED ACCESS.

PROPOSED PROJECT
DUNKIN'
WITH DRIVE THRU
1100 NE DOUGLAS STREET
LEE'S SUMMIT MO. 64086
NEXT GEN (COOL PALAETTE)

ROOF PLAN & DETAILS

DUNKIN' BRANDS
[eat|drink|invest]

A4.0

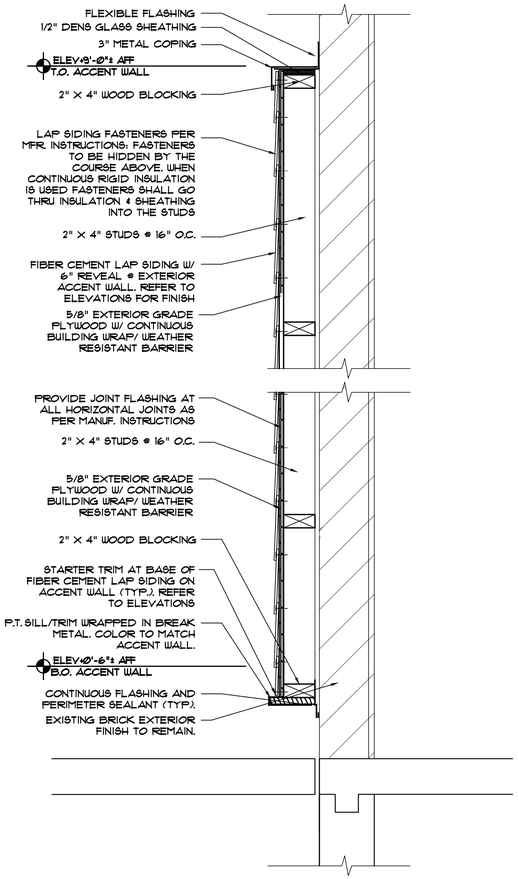

3 A5.0 DETAIL-ACCENT PANEL
SCALE: 1 1/2" = 1'-0"

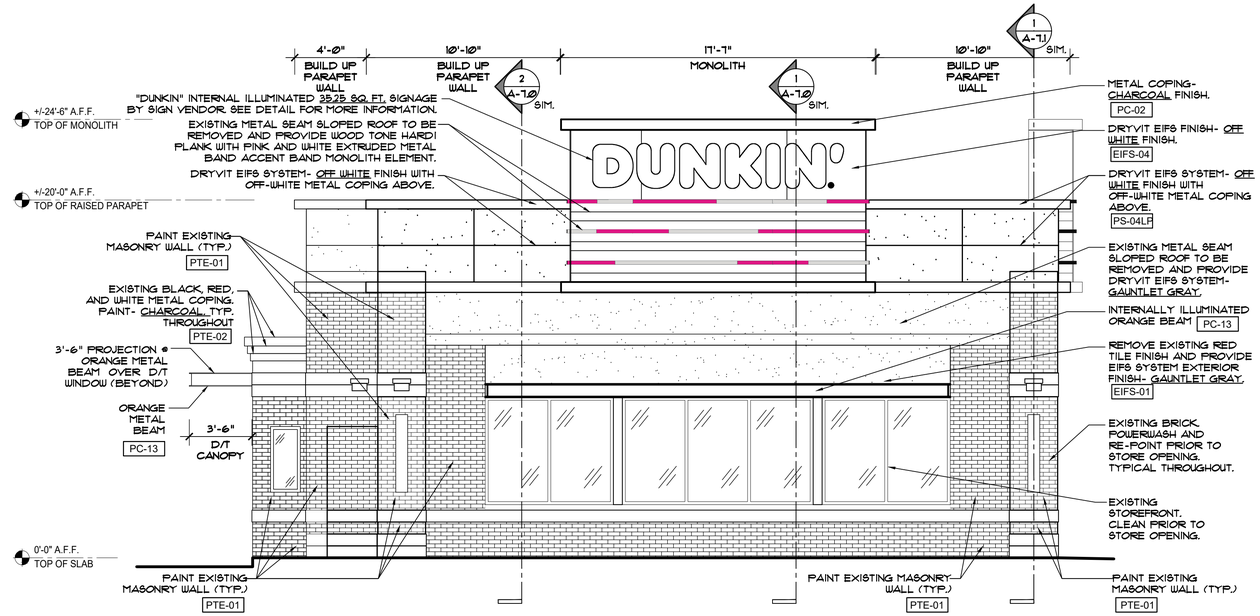

2 A5.0 FRONT (EAST) ELEVATION
SCALE: 1/4" = 1'-0"

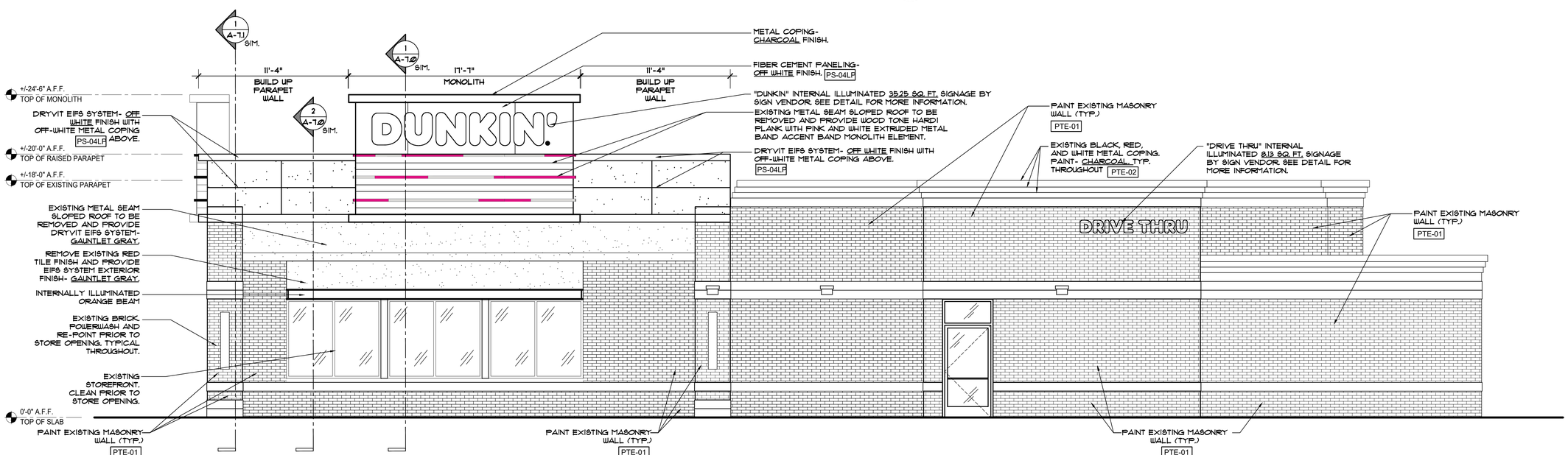

1 A5.0 EXIST ENTRY (NORTH) ELEVATION
SCALE: 1/4" = 1'-0"

ALBERT TAUS & ASSOCIATES, ARCHITECTS
ALBERT TAUS, AIA, ARCHITECT
ARCHITECTURE PLANNING INTERIOR DESIGN ENGINEERING
P.H.L.A.
PHONE: (215) 898-2518 FAX: (215) 898-7398
atausarchitects.com

THESE PLANS ARE THE PROPERTY OF ALBERT TAUS & ASSOCIATES, ARCHITECTS, AND ARE NOT TO BE USED WITHOUT THE EXPRESSED WRITTEN PERMISSION OR CONSENT OF ALBERT A. TAUS, R.A., A.I.A.

STATE OF MISSOURI
ALBERT A. TAUS
NUMBER
A-2015032715
ARCHITECT
MO# A-2015032715
SIGNATURE

DOCUMENTS PREPARED FOR
DDJ21DOUGLAS, LLC
C/o: MR. HOSSAM SHAHIN
109 E. HALE LAKE RD
WARRENSBURG, MO 64093
ATA200602.10

DATE	04/29/21
SCALE	AS NOTED
DRAWN	LJ
CKD	DJK
APPD	AAT

REVISIONS

NO	DESCRIPTION	DATE
1		
2		
3		
4		
5		
6		

THESE PLANS ARE CONFIDENTIAL PROPERTY OF DUNKIN' BRANDS INC. UNDER RESTRICTED ACCESS.

PROPOSED PROJECT
DUNKIN'
WITH DRIVE THRU
1100 NE DOUGLAS STREET
LEE'S SUMMIT, MO. 64086
NEXT GEN (COOL PALAETTE)

EXTERIOR ELEVATIONS

DUNKIN' BRANDS
[eat drink think]

A5.0

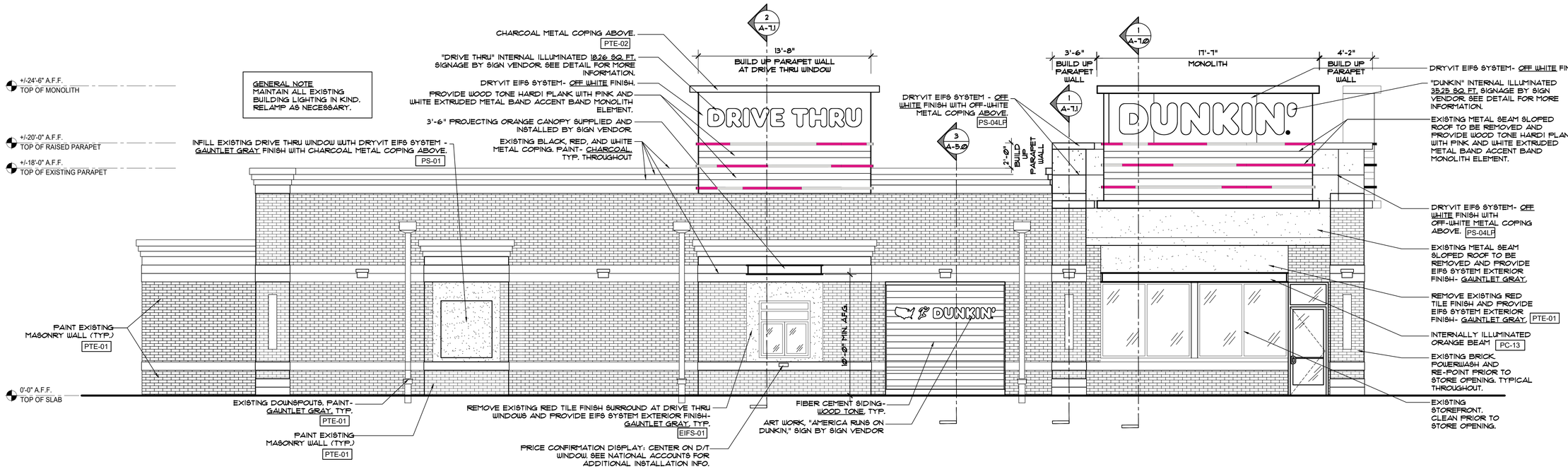

2 A5.1 DRIVE THRU (SOUTH) ELEVATION
SCALE: 1/4" = 1'-0"

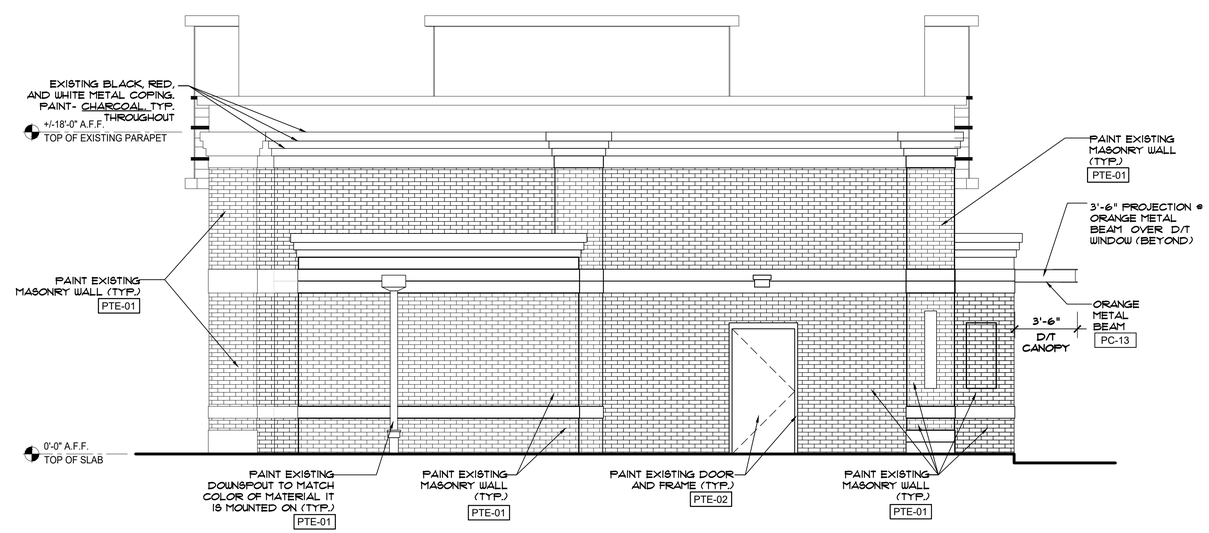

1 A5.1 REAR (WEST) ELEVATION
SCALE: 1/4" = 1'-0"

ALBERT TAUS & ASSOCIATES, ARCHITECTS
ALBERT TAUS, AIA, ARCHITECT
ARCHITECTURE PLANNING INTERIOR DESIGN ENGINEERING
PHILADELPHIA
PHONE: (215) 888-2518 FAX: (215) 888-7388
atausarchitects.com

THESE PLANS ARE THE PROPERTY OF ALBERT TAUS & ASSOCIATES, ARCHITECTS, AND ARE NOT TO BE USED WITHOUT THE EXPRESSED WRITTEN PERMISSION OR CONSENT OF ALBERT A. TAUS, R.A., A.I.A.

STATE OF MISSOURI
ALBERT A. TAUS
NUMBER A-2015032715
ARCHITECT
MO# A-2015032715
SIGNATURE

DOCUMENTS PREPARED FOR
DDJ21DOUGLAS, LLC
C/o: MR HOSSAM SHAHIN
109 E. HALE LAKE RD
WARRENSBURG, MO 64093

ATA200602.10

NO	DESCRIPTION	DATE
6		
5		
4		
3		
2		
1		
–		

REVISIONS

DATE	04/29/21
SCALE	AS NOTED
DRAWN	LJ
CKD	DJK
APPD	AAT

THESE PLANS ARE CONFIDENTIAL PROPERTY OF DUNKIN' BRANDS INC. UNDER RESTRICTED ACCESS

PROPOSED PROJECT
DUNKIN'
WITH DRIVE THRU
1100 NE DOUGLAS STREET
LEE'S SUMMIT, MO. 64086
NEXT GEN (COOL PALAETTE)

EXTERIOR ELEVATIONS

DUNKIN' BRANDS
[eat drink run]

A5.1

EXTERIOR METAL TRIM

CODE	MATERIAL	MANUFACTURER	PRODUCT #	DESCRIPTION / REMARKS	VENDOR CONTACTS
TR-01	METAL	TAMLYN	EXTRUDED METAL CHANNEL USED AT TOWER ELEMENT	**PINK ACCENT BAND** SEE SF03 (PINK)	TAMLYN - XTREME TRIM IAN DANIELS 713-446-3075; idaniels@tamlyn.com OR HORACIO'S SHEET METAL MICHAEL TAVERES P: 508-985-9940; mike@horacios.com OR AGI RANDY KERR 800-877-3810 EXT. 3248; rkerr@agi.net
	METAL	HORACIO			
	METAL	AGI			
TR-02	METAL	TAMLYN	EXTRUDED METAL CHANNEL USED AT TOWER ELEMENT	**OFF WHITE ACCENT BAND** SEE SF04 (WHITE)	
	METAL	HORACIO			
	METAL	AGI			
TR-04	METAL	TAMLYN	(XOCLP34) OUTSIDE CORNER TRIM. USED AT TOWER ELEMENT	TO MATCH FIBER CEMENT LAP SIDING PS-03	TAMLYN - XTREME TRIM IAN DANIELS 713-446-3075; idaniels@tamlyn.com
TR-05	METAL	TAMLYN	(XS516) BOTTOM "STARTER" TRIM. USED AT TOWER ELEMENT	CLEAR ANODIZIED	
TR-06	METAL	TAMLYN	(JMH34) VERTICAL TERMINATION TRIM-TYP. USED AT TOWER ELEMENT	FACTORY FINISH TO MATCH FIBER CEMENT LAP SIDING PS-03	
TR-07	METAL	TAMLYN	(JMH716) TOP TRIM USED AT TOWER ELEMENT	FACTORY FINISH TO MATCH FIBER CEMENT LAP SIDING PS-03	
TR-08	METAL	JAMES HARDIE	JH SURROUND VERTICAL TRIM	FINISH: FACTORY CLEAR ANODIZED 16 GA TRIM AVAILABLE IN 8'-0" LENGTHS, USED WITH JAMES HARDIE REVEAL PANELS	JEFF HARVEY 774-287-6278 JEFFERY.HARVEY@JAMESHARDIE.COM
TR-09	METAL	JAMES HARDIE	JH SURROUND HORIZONTAL TRIM	FINISH: FACTORY CLEAR ANODIZED 16 GA TRIM AVAILABLE IN 8'-0" LENGTHS, USED WITH JAMES HARDIE REVEAL PANELS	
TR-10	METAL	JAMES HARDIE	JH SURROUND OUTSIDE CORNER TRIM	FINISH: FACTORY CLEAR ANODIZED 16 GA TRIM AVAILABLE IN 8'-0" LENGTHS, USED WITH JAMES HARDIE REVEAL PANELS	
TR-11	METAL	JAMES HARDIE	JH SURROUND J-CHANNEL TRIM	FINISH: FACTORY CLEAR ANODIZED 16 GA TRIM AVAILABLE IN 8'-0" LENGTHS, USED WITH JAMES HARDIE REVEAL PANELS. NOTE: CAN BE USED VERTICALLY & HORIZONTALLY @ PENETRATION OR TRANSITION W/ OTHER MATERIALS	

EXTERIOR FIBER-CEMENT EXTERIOR SIDINGAND PANELS

CODE	MATERIAL	MANUFACTURER	PRODUCT #	DESCRIPTION / REMARKS	VENDOR CONTACTS
PS-01	FIBER CEMENT PANEL	JAMES HARDIE	**GRAY FINISH**	COLOR:"AGED PEWTER" SURFACE: HARDIE SIDING OR COLOR: "PRIMED FINISH" FIELD PAINT TO MATCH **PTE-01** DIMENSION: 8 1/4" X 12' X 5/16" THK WITH 6" SIDING EXPOSURE	JEFF HARVEY 774-287-6278 JEFFERY.HARVEY@JAMESHARDIE.COM
PS-01 LP	FIBER CEMENT PANEL	JAMES HARDIE	**GRAY FINISH**	COLOR: "AGED PEWTER" SURFACE: PRE-FINISHED REVEAL PANEL DIMENSION: (5/16" x 48"X96") WITH COLOR MATCHED TRIMS AND COLOR MATCHED SCREWS OR COLOR: "PRIMED FINISH" FIELD PAINT TO MATCH PTE-01	
PS-02	FIBER CEMENT SIDING	JAMES HARDIE	**CHARCOAL FINISH**	COLOR: "IRON GRAY - VOLCANO GRAY" SURFACE: HARDIE SIDING OR COLOR: "PRIMED FINISH" FIELD PAINT TO MATCH PTE-02 DIMENSION: 8 1/4" X 12' X 5/16" THK WITH 6" SIDING EXPOSURE	
PS-02 LP	FIBER CEMENT PANEL	JAMES HARDIE	**CHARCOAL FINISH**	COLOR:"IRON GRAY - VOLCANO GRAY" SURFACE: PRE-FINISHED REVEAL PANEL DIMENSION: (5/16" x 48"X96") WITH COLOR MATCHED TRIMS AND COLOR MATCHED SCREWS OR COLOR: "PRIMED FINISH" FIELD PAINT TO MATCH PTE-02	
PS-03	FIBER CEMENT SIDING	WOODTONE	**WOOD FINISH** RUSTIC SERIES WOODTONE	COLOR: HONEY GLAZE" WOOD PATTERN SURFACE: WOOD PATTERN PLANK DIMENSION: 8 1/4" X 12' X 5/16" THK WITH 6" SIDDING EXPOSURE NOTE: NAILS TO MATCH WOOD FINISH	FOR WOODTONE PRODUCTS: LAURENCE TAYLOR, WOODTONE SALES REPRESENTATIVE PHONE: (604) 792-3680 CELL: (604) 798-2664 LAURENCET@WOODTONE.COM TIM FOLSTER WOODTONE MANAGER, STRATEGIC ACCOUNTS PHONE: (604) 792-3680 CELL: (604) 845-9663 TIMF@WOODTONE.COM
PS-04 LP	FIBER CEMENT PANEL	JAMES HARDIE	**OFF WHITE FINISH LARGE FORMAT PANEL**	COLOR:"ARCTIC WHITE" SURFACE: PRE-FINISHED REVEAL PANEL DIMENSION: (5/16" x 48"X96") WITH COLOR MATCHED TRIMS AND COLOR MATCHED SCREWS OR COLOR: "PRIMED FINISH" FIELD PAINT TO MATCH PTE-04	
PS-05	FIBER CEMENT SIDING	JAMES HARDIE	**MID-TONE FINISH**	COLOR: "GRAY SLATE" SURFACE: HARDIE SIDING OR COLOR: "PRIMED FINISH" FIELD PAINT TO MATCH PTE-05 DIMENSION: 8 1/4" X 12' X 5/16" THK WITH 6" SIDING EXPOSURE	
PS-05 LP	FIBER CEMENT PANEL	JAMES HARDIE	**MID-TONE FINISH**	COLOR:"GRAY SLATE" SURFACE: PRE-FINISHED REVEAL PANEL DIMENSION: (5/16" x 48"X96") WITH COLOR MATCHED TRIMS AND COLOR MATCHED SCREWS OR COLOR: "PRIMED FINISH" FIELD PAINT TO MATCH PTE-05	

EXTERIOR EIFS

CODE	MATERIAL	MANUFACTURER	PRODUCT #	DESCRIPTION / REMARKS	VENDOR CONTACTS
EIFS-01	EIFS	DRYVIT	**GRAY PATTERN**	"GRAY" EIFS; DRYVIT # HDP – DUDO 38 2736 ST: MATCH SW 7019 "GAUNTLET GRAY; SANDPEBBLE FINE	ROBERT DAZEL C: 734-276-0404 BOB.DAZEL@DRYVIT.COM
EIFS-02	EIFS	DRYVIT	**CHARCOAL PATTERN**	"CHARCOAL" EIFS; DRYVIT #DUDO 312736S: MATCH SW 7069 IRON ORE; SANDPEBBLE FINE	
EIFS-02 BR	EIFS	DRYVIT	**CHARCOAL BRICK PATTERN**	MODULAR, WITH TEXTURE: AND WIRE CUT COLOR: GRAY - SW 7019 GAUNTLET GRAY EFFECTS: IRON SPOT AND FLASHED SHAPES COORDINATE AS REQUIRED TO PROJECT SPECIFICS	
EIFS-03 ALT	EIFS	DRYVIT	**WOOD PATTERN**	"WOOD" EIFS; DRYVIT # HDP – DUDO 39 2736 ST: COLOR LATTE; SANDPEBBLE FINE	
EIFS-04	EIFS	DRYVIT	**OFF WHITE PATTERN**	"WHITE" EIFS; DRYVIT DUDO 40 2736 ST : MATCH SW 7063 NEBULOUS WHITE; SANDPEBBLE FINE	
EIFS-05	EIFS	DRYVIT	**MID-TONE CLADDING**	"MIDDLE GREY" EFIS; DRYVIT COLOR: #DUDO 362736S, SANDPEBBLE FINE	
EIFS-12	EIFS	DRYVIT	**PINK BAND**	COLOR: PINK – DUDO 33 1413 S NOTE: STRATOTONE COLORANT	
EIFS-13	EIFS	DRYVIT	**ORANGE BAND**	ORANGE – DUDO 34 1413 S NOTE: STRATOTONE COLORANT	

EXTERIOR METAL PAINTED COATINGS

CODE	MATERIAL	MANUFACTURER	PRODUCT #	DESCRIPTION / REMARKS	VENDOR CONTACTS
PC-01	PAINTED COATING	SHERWIN WILLIAMS	**GRAY FINISH**	SW 7019 "GAUNTLET GRAY"	PLACE ORDER WITH LOCAL SHERWIN WILLIAMS STORE FOR A STORE NEAR YOU CALL: 800-474-3794 MARK T. WEINER NATIONAL ACCOUNT EXECUTIVE 93 CHURCH ST BARRINGTON RI 02806 M: 617-438-1408 O: 401-245-5176 EMAIL: MARK.T.WEINER@SHERWIN.COM
	PAINTED COATING	POWDER COAT	**GRAY FINISH**	SW 7019 "GAUNTLET GRAY"	
PC-02	PAINTED COATING	MATTHEWS PAINT	**CHARCOAL FINISH**	COLOR: MP10269 DARK SLATE FINISH LVS SATIN V2.0	
	PAINTED COATING	SHERWIN WILLIAMS	**CHARCOAL FINISH**	SW 7069 "IRON ORE"	
	PAINTED COATING	POWDER COAT	**CHARCOAL FINISH**	SW 7069 "IRON ORE"	
PC-04	PAINTED COATING	MATTHEWS PAINT	**OFF WHITE FINISH**	**COLOR MATCH PMS COOL GREY 1C** MAP ULTRA LOW V.O.C.	
	PAINTED COATING	SHERWIN WILLIAMS	**OFF WHITE FINISH**	SW 7063 "NEBULOUS WHITE"	
	PAINTED COATING	POWDER COAT	**OFF WHITE FINISH**	SW 7063 "NEBULOUS WHITE"	
PC-05	PAINTED COATING	SHERWIN WILLIAMS	**MID-TONE FINISH**	SW 7066 "GRAY MATTERS"	
	PAINTED COATING	POWDER COAT	**MID-TONE FINISH**	SW 7066 "GRAY MATTERS"	
PC-09	PAINTED COATING	SHERWIN WILLIAMS OR FACTORY FINISH TO MATCH SW COLOR	**WALK-IN**	SW 7069 "IRON ORE"	
	PAINTED COATING	POWDER COAT TO MATCH SHERWIN WILLIAMS SW COLOR	**WALK-IN**	SW 7069 "IRON ORE"	
PC-12	PAINTED COATING	MATTHEWS PAINT	**DD PINK FINISH**	**COLOR MATCH PMS 219 C** COLOR: MP79206 R161426 FINISH: LVS SATIN V1.0 OVER MP55898 WHITE BASECOAT	
	PAINTED COATING	SHERWIN WILLIAMS	**DD PINK FINISH**	**COLOR MATCH PMS 219 C**	
	PAINTED COATING	POWDER COAT	**DD PINK FINISH**	**COLOR MATCH PMS 219 C**	
PC-13	PAINTED COATING	MATTHEWS PAINT	**DD ORANGE FINISH**	**COLOR MATCH PMS 165C** COLOR: MP797700 R161426 FINISH: LVS SATIN V1.0 OVER MP55898 WHITE BASECOAT	
	PAINTED COATING	SHERWIN WILLIAMS	**DD ORANGE FINISH** COLOR # 5059990	Blended At: Sherwin Williams Product Finishes, Lowell MA Product: LV3 - Genesis Low VOC Satin GT1039 Orange Toner 785.97g / .19gal GT1511 Low VOC Gloss Clear 529.21g / .12gal GT1043 Autumn Orange 194.04g / .05gal GT1011 Artic White 137.20g / .02gal GR1088 Reducer 442.38g / .13gal GT1510 Low VOC Flat Clear 2157.21g / .49gal	
	PAINTED COATING	POWDER COAT	**DD ORANGE FINISH**	**COLOR MATCH PMS 165C**	

EXTERIOR WALL PAINT

CODE	MATERIAL	MANUFACTURER	PRODUCT #	DESCRIPTION / REMARKS	VENDOR CONTACTS
PTE-01	PAINT	SHERWIN WILLIAMS	**GRAY FINISH**	SW 7019 "GAUNTLET GRAY"	PLACE ORDER WITH LOCAL SHERWIN WILLIAMS STORE FOR A STORE NEAR YOU CALL: 800-474-3794 MARK T. WEINER NATIONAL ACCOUNT EXECUTIVE O: 401-245-5176 EMAIL: MARK.T.WEINER@SHERWIN.COM
PTE-02	PAINT	SHERWIN WILLIAMS	**CHARCOAL FINISH**	SW 7069 "IRON ORE"	
PTE-04	PAINT	SHERWIN WILLIAMS	**OFF WHITE FINISH**	SW 7063 "NEBULOUS WHITE"	
PTE-05	PAINT	SHERWIN WILLIAMS	**MID-TONE FINISH**	SW 7066 "GRAY MATTERS"	
PTE-09	PAINT	SHERWIN WILLIAMS OR FACTORY FINISH TO MATCH SW COLOR	**WALK -IN BOX**	SW 7069 "IRON ORE"	
PTE-12	PAINT		**DD PINK**	**COLOR MATCH PMS 219 C** MAP ULTRA LOW V.O.C.	
PTE-13	PAINT		**DD ORANGE**	**COLOR MATCH PMS 165C** MAP ULTRA LOW V.O.C.	

EXTERIOR FIBER-CEMENT CLADDING SYSTEMS

CODE	MATERIAL	MANUFACTURER	PRODUCT #	DESCRIPTION / REMARKS	VENDOR CONTACTS
PP-01	FIBER-CEMENT CLADDING	NICHIHA	**GRAY FINISH** TUFFBLOCK "PEWTER" EPF641F	COLOR:"PEWTER" SURFACE: STANDARD Dimension: 17 7/8"H x119 5/16"L x 5/8"TH TRIM: NICHIHA MTCK-01 METAL TRIM CORNER KEY 1 1/2" X 1/2" COLOR: CLEAR ANNODIZED	MATT STEPHENSON NATIONAL BRANDS MANAGER: P: 770-789-8228 Email:dunkindonuts@nichiha.com Email:MSTEPHENSON@nichiha.com **Matt Stephenson** Project Manager C: 770-789-8228 Email:mstephenson@nichiha.com
PP-02	FIBER-CEMENT CLADDING	NICHIHA	**CHARCOAL FINISH** TUFFBLOCK "STEEL" EPF644F	COLOR:"STEEL" SURFACE:STANDARD Dimension: 17 7/8"H x119 5/16"L x 5/8"TH TRIM: NICHIHA MTCK-01 METAL TRIM CORNER KEY 1 1/2" X 1/2" COLOR: CLEAR ANNODIZED	
PP-04	FIBER-CEMENT CLADDING	NICHIHA	**OFF WHITE FINISH** MIRAIA SNOW - EDM1014SUS AWP 18X18 SMOOTH	COLOR: "SNOW" TEXTURE / SURFACE: HIGH GLOSS DIMENSION: 17 7/8"H x 71 9/16"L x 5/8"TH TRIM: NICHIHA MTCK-SNOW METAL-TRIM, CORNER KEY 4 GLOSS PANEL SNOW DIMENSION TRIM: 1 1/2" X 1'-1/2"	
PP-05	FIBER-CEMENT CLADDING		**MID-TONE FINISH** NOT USED SEE PP-01		

TRAFFIC STRIPING PAINT

CODE	MATERIAL	MANUFACTURER	PRODUCT #	DESCRIPTION	VENDOR CONTACTS
TP-01	PAINT	SHERWIN WILLIAMS	PRO PARK	"WHITE": B97WD2434	PLACE ORDER WITH LOCAL SHERWIN WILLIAMS STORE FOR A STORE NEAR YOU CALL: 800-474-3794 MARK T. WEINER NATIONAL ACCOUNT EXECUTIVE 93 CHURCH ST BARRINGTON RI 02806 M: 617-438-1408 O: 401-245-5176 EMAIL: MARK.T.WEINER@SHERWIN.COM
TP-02	PAINT	SHERWIN WILLIAMS	PRO PARK	"BLUE": B97LD2022	
TP-03	PAINT	SHERWIN WILLIAMS	PRO PARK	"YELLOW": B97YD2467	
TP-04	PAINT	SHERWIN WILLIAMS	PRO PARK	"ORANGE": CUSTOM MIX B97YD2467 CCE* COLORANT 0Z 32 64 128 W1-WHITE - 6 1 — R4-NEW RED 4 53 1 — Y3-DEEP GOLD - 06 - 1	
TP-05	PAINT	SHERWIN WILLIAMS	PRO PARK	"PINK": CUSTOM MIX B97RD2012 CEE* COLORANT 0Z 32 64 128 W1-WHITE 6 – – – L1- BLUE – 6 – --	

ALBERT TAUS & ASSOCIATES, ARCHITECTS
ALBERT TAUS, A.I.A., ARCHITECT
ARCHITECTURE PLANNING INTERIOR DESIGN ENGINEERING
P H I L A D E L P H I A , P A
PHONE: (215) 698 - 2516 FAX: (215) 698 - 7398
atausarchitects.com

THESE PLANS ARE THE PROPERTY OF ALBERT TAUS & ASSOCIATES, ARCHITECTS, AND ARE NOT TO BE USED WITHOUT THE EXPRESSED WRITTEN PERMISSION OR CONSENT OF ALBERT A. TAUS, R.A., A.I.A.

STATE OF MISSOURI
ALBERT A. TAUS
NUMBER A-2015032715
ARCHITECT
MO# A-2015032715
SIGNATURE

DOCUMENTS PREPARED FOR
DDJ21DOUGLAS, LLC
C/O: MR. HOSSAM SHAHIN
109 E. HALE LAKE RD
WARRENSBURG, MO 64093
ATA200602.10

DATE	04/29/21
SCALE	AS NOTED
DRAWN	GR
CKD	DJK
APPD	AAT

NO	DESCRIPTION	DATE
6		
5		
4		
3		
2		
1		
–		

REVISIONS

THESE PLANS ARE CONFIDENTIAL PROPERTY OF DUNKIN' BRANDS, INC. UNDER RESTRICTED ACCESS.

PROPOSED PROJECT
DUNKIN'
WITH DRIVE THRU
1100 NE DOUGLAS STREET
LEE'S SUMMIT MO. 64086
NEXT GEN (COOL PALAETTE)
EXTERIOR FINISH SCHEDULE

DUNKIN' BRANDS [eatdrinkthink]

A6.0

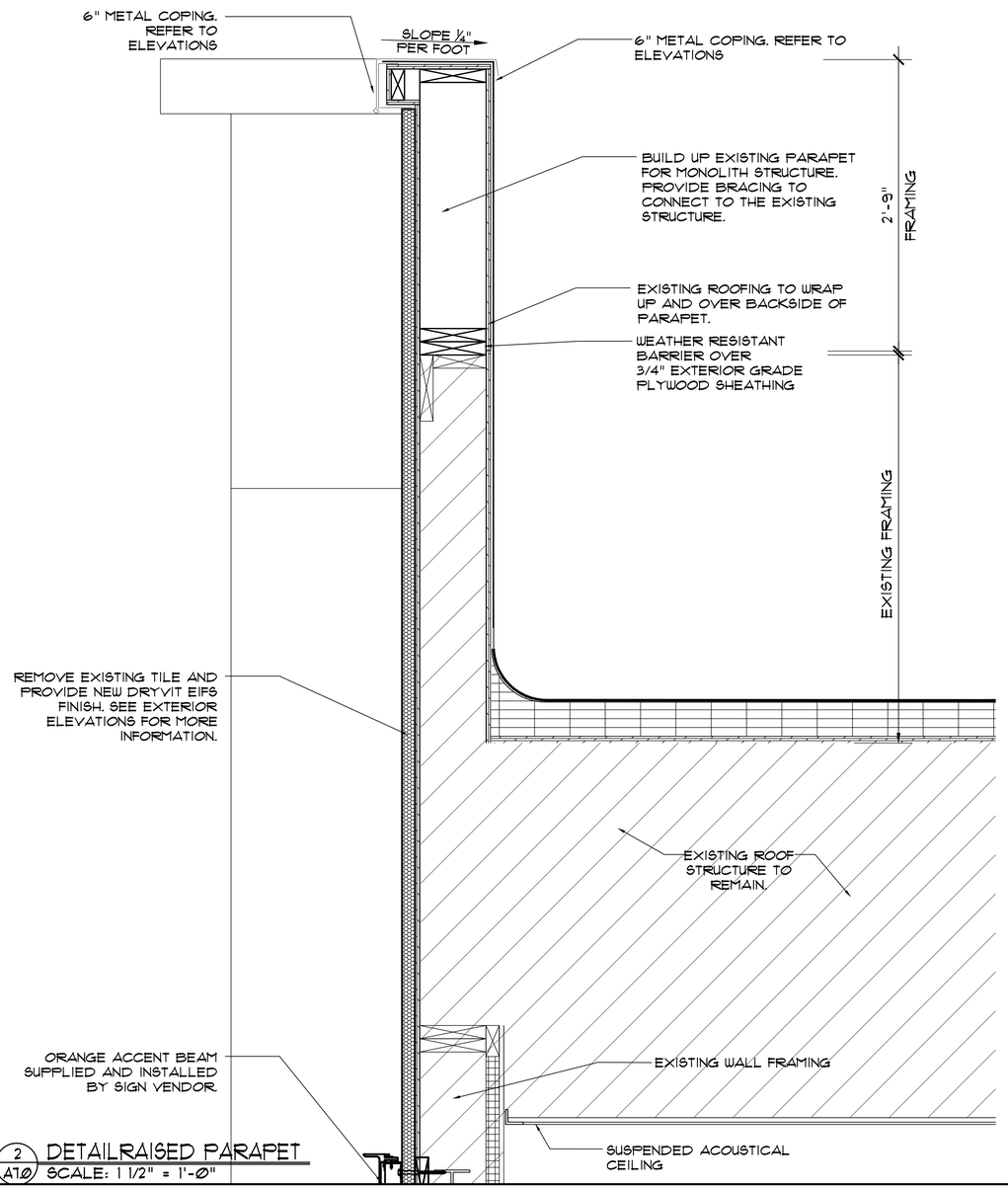

2 A7.0 DETAILRAISED PARAPET
SCALE: 1 1/2" = 1'-0"

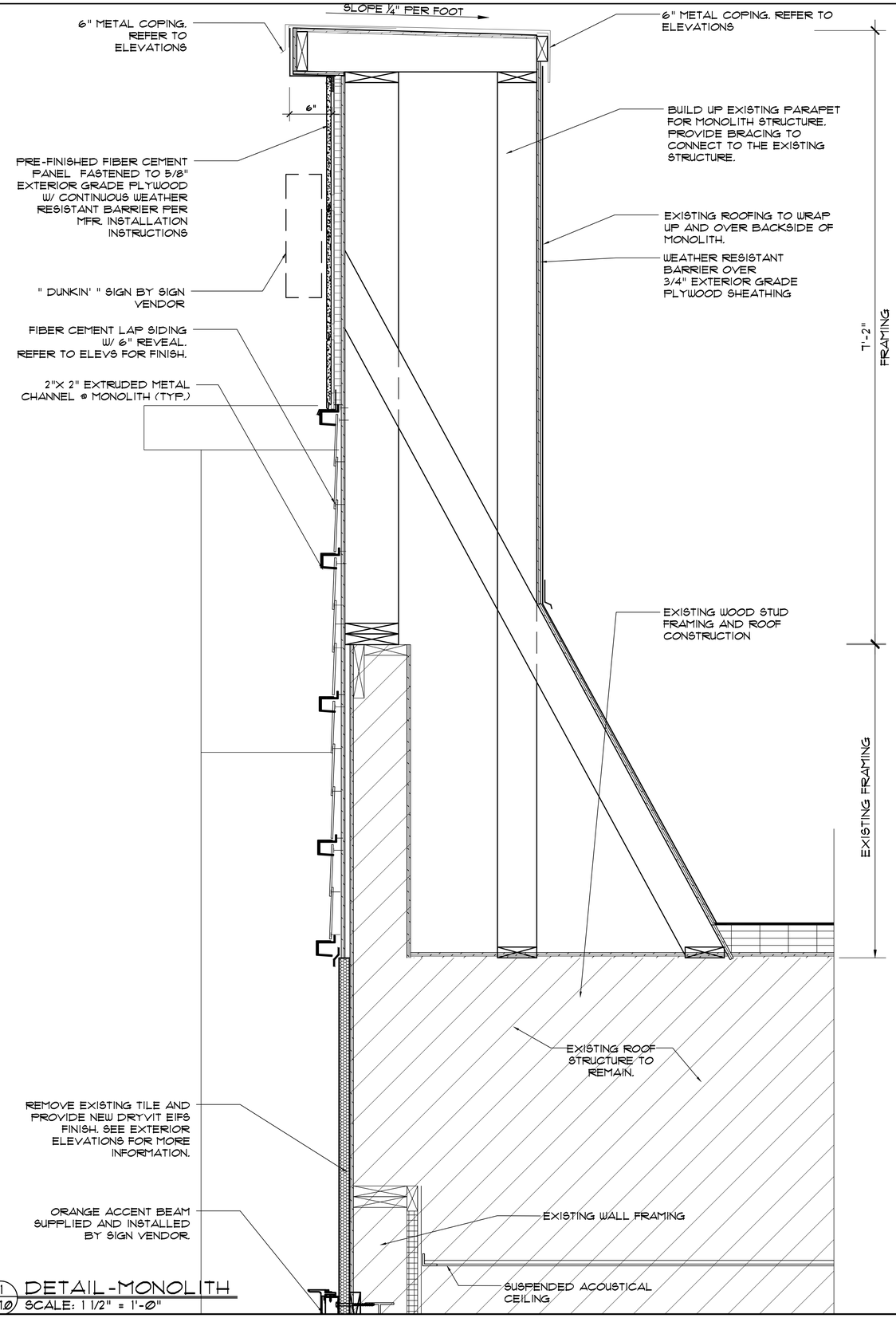

1 A7.0 DETAIL-MONOLITH
SCALE: 1 1/2" = 1'-0"

ALBERT TAUS & ASSOCIATES, ARCHITECTS
ALBERT TAUS, A.I.A., ARCHITECT
ARCHITECTURE PLANNING INTERIOR DESIGN ENGINEERING
PHILADELPHIA, PA
PHONE: (215) 698-2516 FAX: (215) 698-7398
atausarchitects.com

THESE PLANS ARE THE PROPERTY OF ALBERT TAUS & ASSOCIATES, ARCHITECTS, AND ARE NOT TO BE USED WITHOUT THE EXPRESSED WRITTEN PERMISSION OR CONSENT OF ALBERT A. TAUS, R.A., A.I.A.

STATE OF MISSOURI
ALBERT A. TAUS
NUMBER
A-2015032715
ARCHITECT
MO# A-2015032715
SIGNATURE

DOCUMENTS PREPARED FOR
DDJ21DOUGLAS, LLC
C/o: MR. HOSSAM SHAHIN
109 E. HALE LAKE RD
WARRENSBURG, MO 64093
ATA200602.10

NO	DESCRIPTION	DATE
6		
5		
4		
3		
2		
1		
–		

REVISIONS

DATE	04/29/21
SCALE	AS NOTED
DRAWN	LJ
CKD	DJK
APPD	AAT

PROPOSED PROJECT
DUNKIN'
WITH DRIVE THRU
1100 NE DOUGLAS STREET
LEE'S SUMMIT MO. 64086
NEXT GEN (COOL PALAETTE)

THESE PLANS ARE CONFIDENTIAL PROPERTY OF DUNKIN' BRANDS INC. UNDER RESTRICTED ACCESS.

DUNKIN' BRANDS
[eatdrinkthink]

A7.0

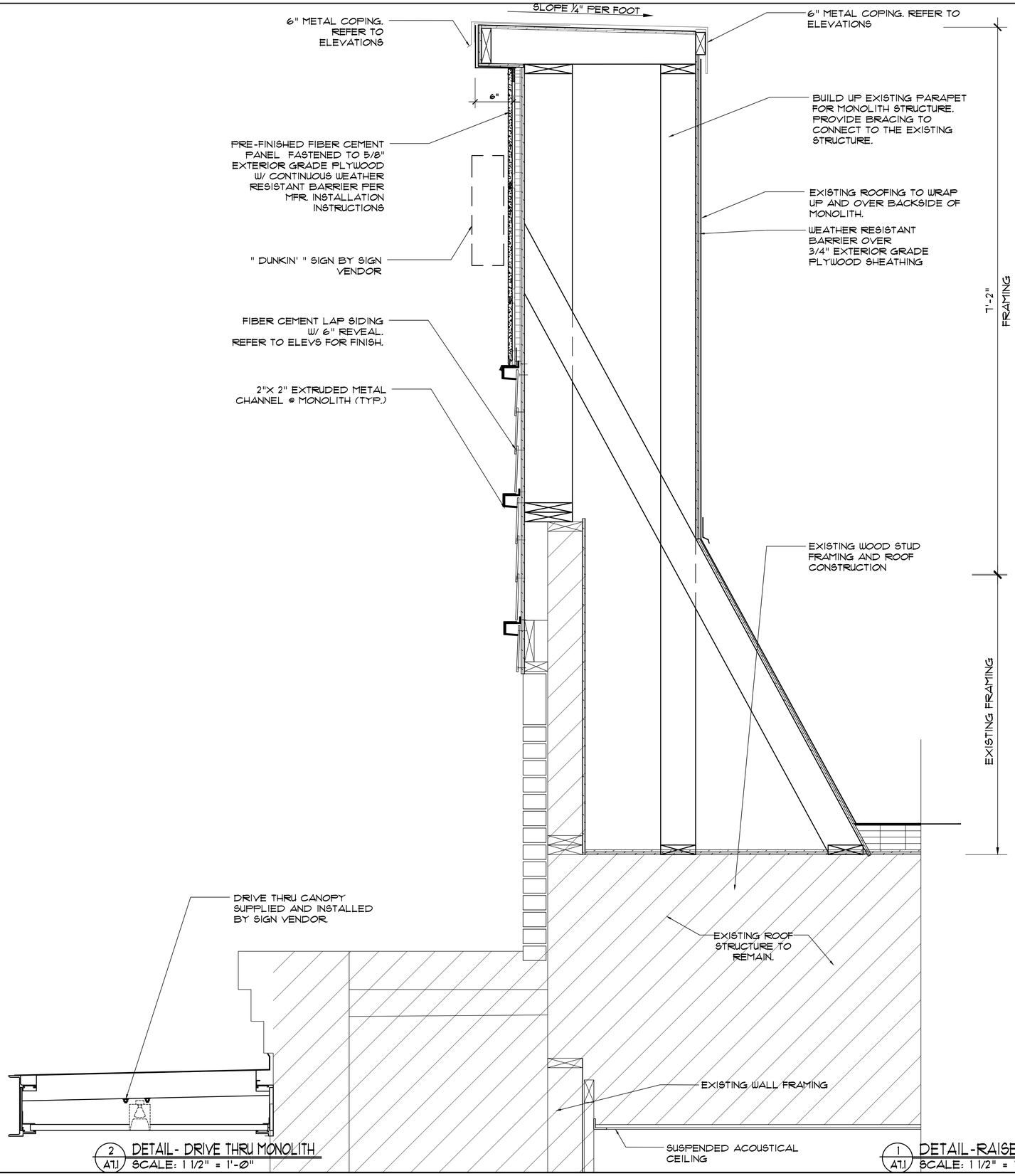

2 A7.1 DETAIL- DRIVE THRU MONOLITH
SCALE: 1 1/2" = 1'-0"

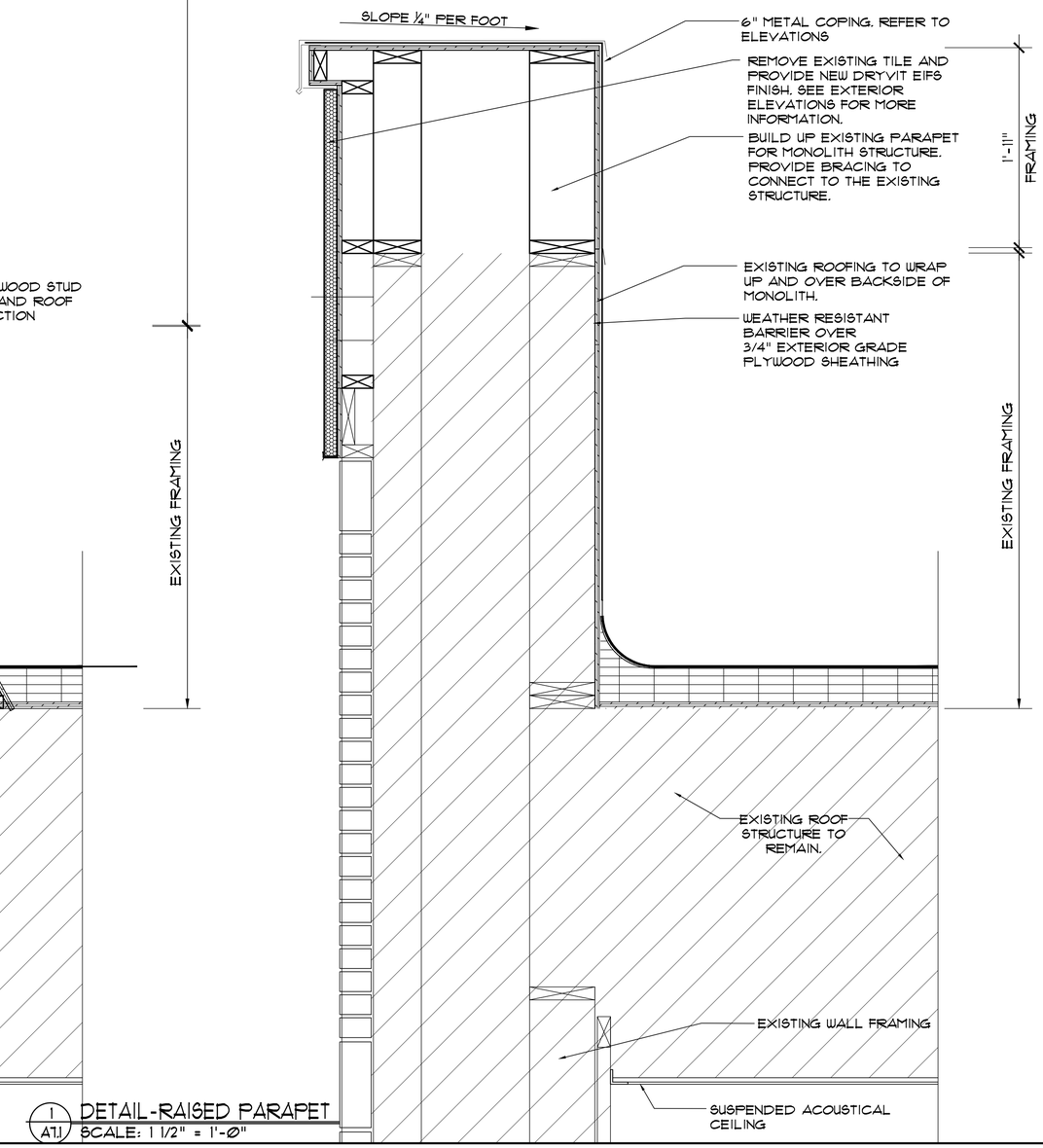

1 A7.1 DETAIL-RAISED PARAPET
SCALE: 1 1/2" = 1'-0"

ALBERT TAUS & ASSOCIATES, ARCHITECTS
ALBERT TAUS, A.I.A., ARCHITECT
ARCHITECTURE PLANNING INTERIOR DESIGN ENGINEERING
PHILADELPHIA, PA
PHONE: (215) 698-2516 FAX: (215) 698-7398
atausarchitects.com

THESE PLANS ARE THE PROPERTY OF ALBERT TAUS & ASSOCIATES, ARCHITECTS, AND ARE NOT TO BE USED WITHOUT THE EXPRESSED WRITTEN PERMISSION OR CONSENT OF ALBERT A. TAUS, R.A., A.I.A.

STATE OF MISSOURI
ALBERT A. TAUS
NUMBER
A-2015032715
ARCHITECT
MO# A-2015032715
SIGNATURE

DOCUMENTS PREPARED FOR
DDJ21DOUGLAS, LLC
C/o: MR. HOSSAM SHAHIN
109 E. HALE LAKE RD
WARRENSBURG, MO 64093
ATA200602.10

NO	DESCRIPTION	DATE
6		
5		
4		
3		
2		
1		
–		

REVISIONS

DATE	04/29/21
SCALE	AS NOTED
DRAWN	LJ
CKD	DJK
APPD	AAT

PROPOSED PROJECT
DUNKIN'
WITH DRIVE THRU
1100 NE DOUGLAS STREET
LEE'S SUMMIT MO. 64086
NEXT GEN (COOL PALAETTE)

THESE PLANS ARE CONFIDENTIAL PROPERTY OF DUNKIN' BRANDS INC. UNDER RESTRICTED ACCESS.

DUNKIN' BRANDS
[eatdrinkthink]

A7.1

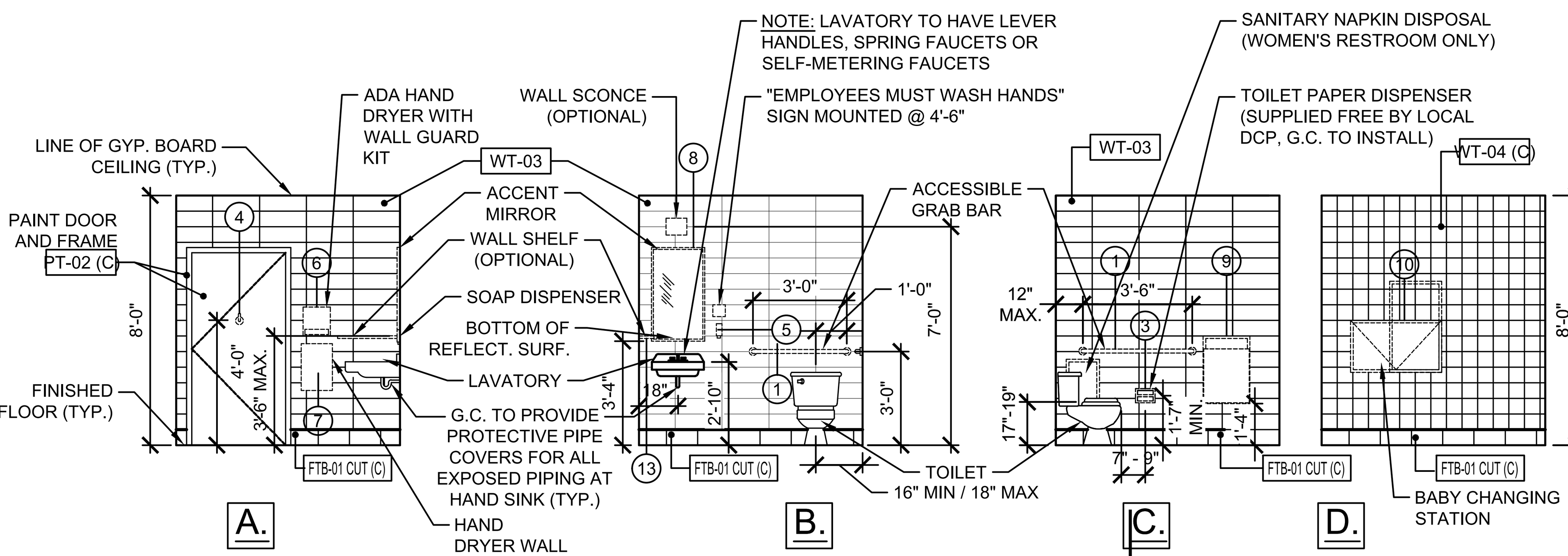

NOTE:
GROUT LINES IN REST ROOMS TO BE AS MINIMAL AS POSSIBLE TO PREVENT GRAFFITTI STAINING.
*** FINISHES ARE TYPICAL FOR BOTH RESTROOMS. ***

10 / A8.0 TYPICAL HANDICAP RESTROOM ELEVATIONS
SCALE: 1/4" = 1'-0"

*** FINISHES ARE TYPICAL FOR BOTH RESTROOMS. ***

NOTES:
- ALL SHELVING AND HARDWARE SUPPLIED AND INSTALLED BY GENERAL CONTRACTOR
- GENERAL CONTRACTOR SHALL PROVIDE ADEQUATE BLOCKING FOR ALL SHELVING IN OFFICE

SHELVING HARDWARE SPECS
KNAPE & VOGT #180-12 HEAVY DUTY ADJ KNIFE BRACKETS
KNAPE & VOGT #80 STANDARDS
FINISH: STEEL w/ ANOCHROME FIN

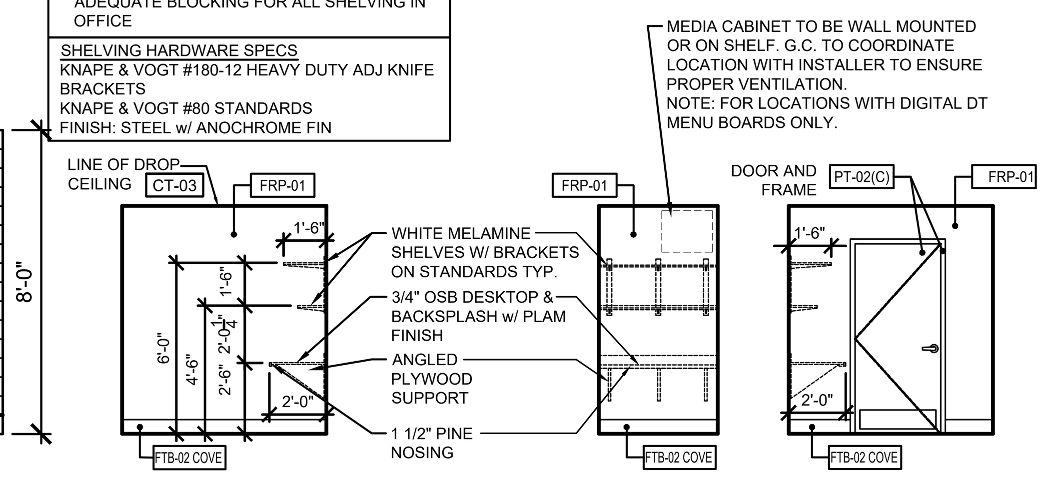

11 / A8.0 INTERIOR ELEVATION AT OFFICE (TYPICAL)
SCALE: NOT TO SCALE

ADA NOTES:

THE GENERAL CONTRACTOR SHALL ACQUAINT THEMSELF WITH THE BARRIER FREE REQUIREMENTS PER APPLICABLE STATE AND THE AMERICAN DISABILITIES ACT (ADA) TO ENSURE THAT THIS FACILITY WILL BE ACCESSIBLE ACCORDING TO THE STRICTER REQUIREMENTS OF THE APPLICABLE STANDARDS. THE FOLLOWING IS A PARTIAL LIST OF REQUIREMENTS.

1. DOOR HARDWARE SHALL BE MOUNTED BETWEEN 36" AND 42" ABOVE FLOOR AND BE LEVER TYPE.
2. TOILETS:
   - A. LAVATORY TO HAVE LEVER HANDLES, SELF METERING FAUCETS OR SPRING FAUCET. FAUCETS SHALL BE SET TO REMAIN OPEN FOR 10 SECONDS MINIMUM.
   - B. A COAT HOOK 48" ABOVE THE FLOOR SHALL BE MOUNTED ADJACENT TO THE BARRIER FREE STALL DOOR.
   - C. LOCATE THE WATER CLOSET 16" TO 18" FROM THE CENTER LINE OF THE FIXTURE TO THE WALL. THE SEAT WILL BE 17" TO 19" ABOVE THE FLOOR TO THE TOP OF SEAT. FLUSH HANDLE TO BE ON EXPOSED SIDE OF WATER CLOSET.
   - D. PROVIDE ONE 42" AND ONE 36" LONG x 1 1/2" OUTSIDE DIAMETER PEENED GRAB BARS, 1 1/2" FROM THE WALL WITH ONE BEHIND AT 12" FROM CENTER LINE OF WATER CLOSET ON ONE SIDE. ONE ADJACENT TO AT 12" FROM THE WALL 33"-36" PARALLEL TO AND ABOVE THE FLOOR.
   - E. LAVATORY TO BE MOUNTED 34" MAX. ABOVE THE FINISHED FLOOR TO RIM WITH KNEE SPACE OF 30" IN WIDTH AND 27" IN CLEAR HEIGHT. (29" CLEAR UNDER FRONT EDGE)
   - F. INSTALL MIRROR 40" MAX. ABOVE THE FINISHED FLOOR TO BOTTOM EDGE OF REFLECTING SURFACE (MIRROR GLASS BOTTOM) AND 72" TO TOP.
   - G. DISPENSERS TO BE MOUNTED A MAXIMUM OF 42" ABOVE THE FLOOR TO ALL OPERATING OR DISPENSING SLOTS.
   - H. TOILET PAPER DISPENSERS MOUNTED 19" MIN. TO CENTER LINE ABOVE THE FLOOR AND 7" MINIMUM AND 9" MAXIMUM FROM FRONT EDGE OF WATER CLOSET MEASURED TO THE CENTERLINE OF THE DISPENSER

RESTROOM EQUIPMENT SCHEDULE

CODE	ITEM	MANUFACTURER & PRODUCT #	MOUNTING HEIGHT	REMARKS
1	GRAB BARS	ASI 3701-18P (18"), -36P (36") & -42P (42")	36" MAX. A.F.F.	NOTE C
2	SWING-UP GRAB BAR	BOBRICK #B-4998.99	SEE INSTALLATION INSTRUCTIONS	NOTE C, INSTALL WHEN REQUIRED
3	TOILET PAPER HOLDER	KC PROFESSIONAL 09551	20" BOT OF UNIT, SURFACE MOUNTED	
4	COAT HOOK	ASI 0751	48" A.F.F. , MOUNTED ON DOOR	
5	SOAP DISPENSER	DERMA FOAM E- KAY CHEMICAL COMPANY		NOTE A, C
6	AUTOMATIC HAND DRYER	"WORLD VERDIDRI" Q974-A - WHITE OR Q973-A - STAINLESS OR "EXCEL" XLERATOR THIN AIR TA-SI WG - WHITE OR TA-SI WG - STAINLESS		NOTE A, C & E
7	HAND DRYER WALL GUARD	WORLD	-	NOTE F
8	MIRROR (18"x30")	ASI 0620-2436	40" A.F.F. TO BOTTOM	NOTE C
9	TRASH RECEPTACLE	ASI 0458	41"-45" A.F.F. TO OPENING FOR ADA	
10	BABY CHANGING STATION	ASI 9012 HORIZONTAL OR ASI 9015 VERTICAL	27" TO BOTTOM OF UNIT	NOTE C
11	SANITARY NAPKIN DISPOSAL	ASI 0852	24" TO TOP OF UNIT	WOMEN'S RESTROOM ONLY
12	SEAT COVER DISPENSER (OPTIONAL)	ASI 0477 SM		(OPTIONAL)
13	WALL SHELF	ASI 0692-516 (5"x16")	42" A.F.F. FOR ADA; NOTE C	(OPTIONAL)

NOTES

NOTE A: OPERATING CONTROLS OF ALL HAND DRYERS, SOAP DISPENSERS AND MULTI PURPOSE UNITS TO BE 42" A.F.F.
NOTE B: G.C. TO FIELD VERIFY ALL SIZES
NOTE C: PROVIDE BLOCKING FOR ALL WALL MOUNTED FIXTURES AND ACCESSORIES
NOTE D: TOILET TISSUE & PAPER TOWEL DISPENSERS SUPPLIED FREE FROM LOCAL DCP; INSTALLED BY G.C.
NOTE E: HAND DRYER TO BE ORDERED FROM NATIONAL ACCOUNT SUPPLIER AND IS REQUIRED TO HAVE STANDARD DBI GREEN MESSAGING/BRANDING.
NOTE F: AVAILABLE WITH HAND DRYER; CAN BE PURCHASED SEPARATELY (FOR REMODELS).

RESTROOM EQUIPMENT LIST

ALTERNATE HANDS-FREE TOILET EQUIPMENT IS AVAILABLE FOR OPTIONAL USE IN RESTROOMS

WALL MOUNTED LAVATORY: "LUCERNE" BY AMERICAN STANDARD #0355.012.
AUTOMATIC FAUCET (STANDARD): SLOAN #ETF-600-B-BDT, W/ TRANSFORMER #EL-154 AND 0.5 GPM AERATOR #ETEF-1024-A.

TANK TOILET (STANDARD):
STANDARD OPTION: AMERICAN STANDARD CADET PRO RIGHTHEIGHT ELONGATED 1.28 GPF #215AA.104 (LEFT TRIP) #215AA.105 (RIGHT TRIP)
PRESSURE-ASSIST OPTION: AMERICAN STANDARD CADET FLOWISE WIGHTHEIGHT ELONGATED, PRESSURE ASSIST 1.1 GPF #2467.00 (LEFT TRIP) #2467.XXX (SPECIFY RIGHT TRIP)

TANKLESS TOILET (OPTIONAL):
AMERICAN STANDARD MADERA FLOWISE ELONGATED, 1.28 GPF #3043.001
MANUAL FLUSH (STANDARD): SLOAN REGAL 111.1.28 (3780046) FLUSHOMETER
AUTOMATIC FLUSH (OPTIONAL): SLOAN 8111-1.28 (3790071) EXPOSED, BATTERY POWERED, SENSOR ACTIVATED DUAL FLUSH FLUSHOMETER

URINAL:
AMERICAN STANDARD WASHBROOK FLOWISE 0.5 GPF HIGH EFFICIENCY URINAL #6590.001
MANUAL FLUSH (STANDARD): SLOAN 186-0.5 (3782655) REGAL 186-1
AUTOMATIC FLUSH (OPTIONAL): SLOAN 8186-0.5 (3790068) TOUCHFREE OPERATION, METAL COVER, OVERRIDE BUTTON & FLUSHO METER BODY LESS HANGLE OPENNER.
'WATERLESS' URINAL (OPTIONAL - DD ELITE):
SLOAN WATERFREE URINAL WITH SLOANTEC GLAZE WES-4000-STG (1074000)

1. LOW FLOW PLUMBING FIXTURES MUST MEET FLUSH/FLOW FIXTURE VOLUMES STANDARDS OF 1.28 GPF TOILETS, 0.5 GPF URINALS, 0.5 GPM HAND WASH FAUCETS, AND 2.2 GPM POT SINK FAUCET (BY OTHERS) WITH 1.24 GPM SPRAY HEAD (BY OTHERS)
2. G.C. TO PROVIDE PRICING FOR STANDARD EQUIPMENT UNLESS DIRECTED OTHERWISE BY FRANCHISEE.

VENDOR CONTACT INFO FOR RESTROOM FIXTURES AND ACCESSORIES	RESTROOM REMODELS	NEWTON DISTRIBUTORS
	15 HAMMATT ST. - PO BOX 34 IPSWICH, MA 01938 PHONE: 617-500-2554 / FAX: 617-845-0350 WWW.RESTROOMREMODELS.COM SALES@RESTROOMREMODELS.COM	VENDOR CONTACT: PEDRO GRULLON P: 877-837-7745 E: PEDRO@NEWTONDISTRIBUTING.COM WWW.NEWTONDISTRIBUTING.COM

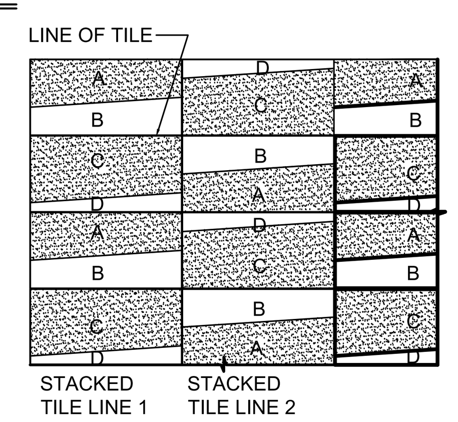

GENERAL ACCENT TILE NOTES:
TILES SHOWN ON INTERIOR ELEVATIONS IS DIAGRAMMATIC
INSTALL TILE PER MANUFACTURER'S SIZES AND SPECIFICATIONS. SEE DETAILS FOR MORE INFORMATION.

TILE PATTERN TO BE RANDOM. INSTALL PER THE GUIDELINES BELOW:
- TILE A - START OF TILE PATTERN.
- TILE B = TILE "A" ROTATED COUNTER CLOCKWISE 90°.
- TILE C = TILE "B" ROTATED COUNTER CLOCKWISE 90°.
- TILE D = TILE "C" ROTATED COUNTER CLOCKWISE 90°.

8 / A8.0 BACKLINE TILE DETAIL
SCALE: NOT TO SCALE

NOTES:
1. CHAIR RAIL TO BE FASTENED TO STUDS; PROVIDE BLOCKING AS REQUIRED.
2. ALL OUTSIDE CORNERS TO RECEIVE ACROVYN 4000 SERIES 1 1/2" x 1 1/2" "BRUSHED NICKEL". CORNER GUARDS, FROM TOP OF WALL BASE TO 5'-6" A.F.F.TO BE CUT DOWN @ CHAIR RAIL AND CONTINUE ABOVE; PROVIDE CORRESPONDING CHAIR RAIL CORNER PIECE AS NEEDED. REFER TO NATIONAL ACCOUNT FOR FURTHER INFO.

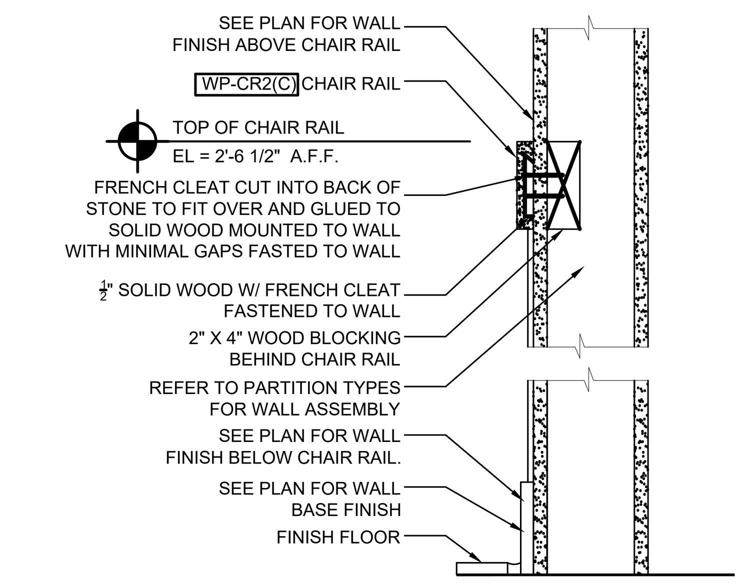

6 / A8.0 CHAIR SECTION @ SALES AREA
SCALE: 1/4" = 1'-0"

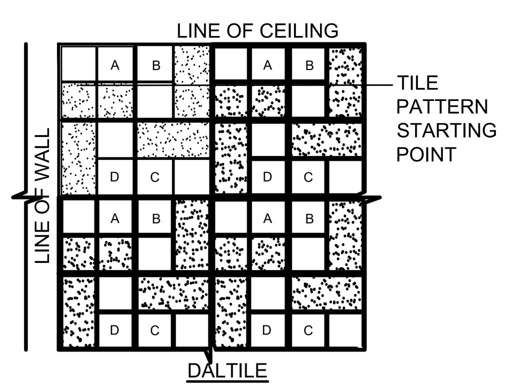

7 / A8.0 RESTROOM ACCENT WALL TILE DETAIL
SCALE: NOT TO SCALE

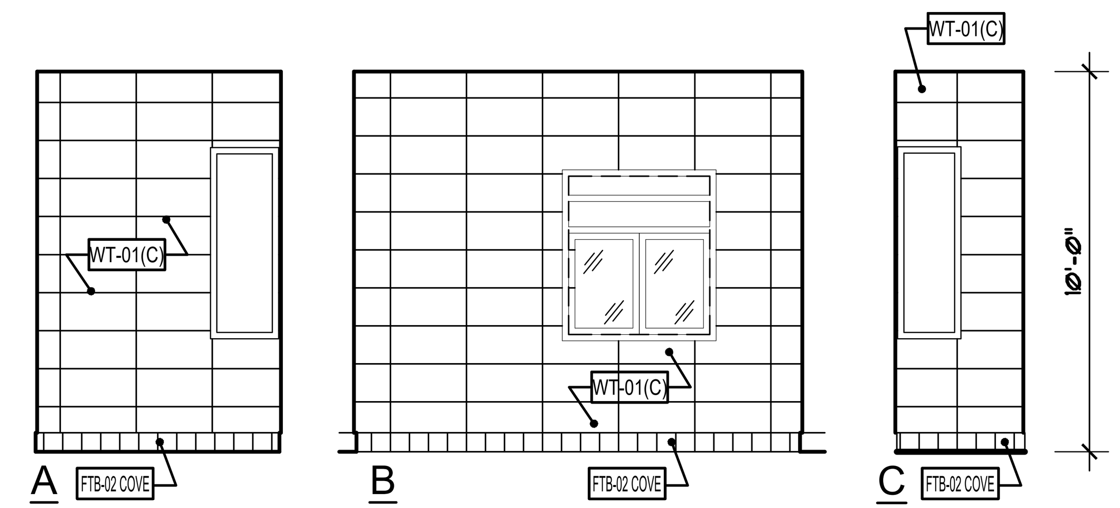

9 / A8.0 RESTROOM ACCENT WALL TILE DETAIL
SCALE: NOT TO SCALE

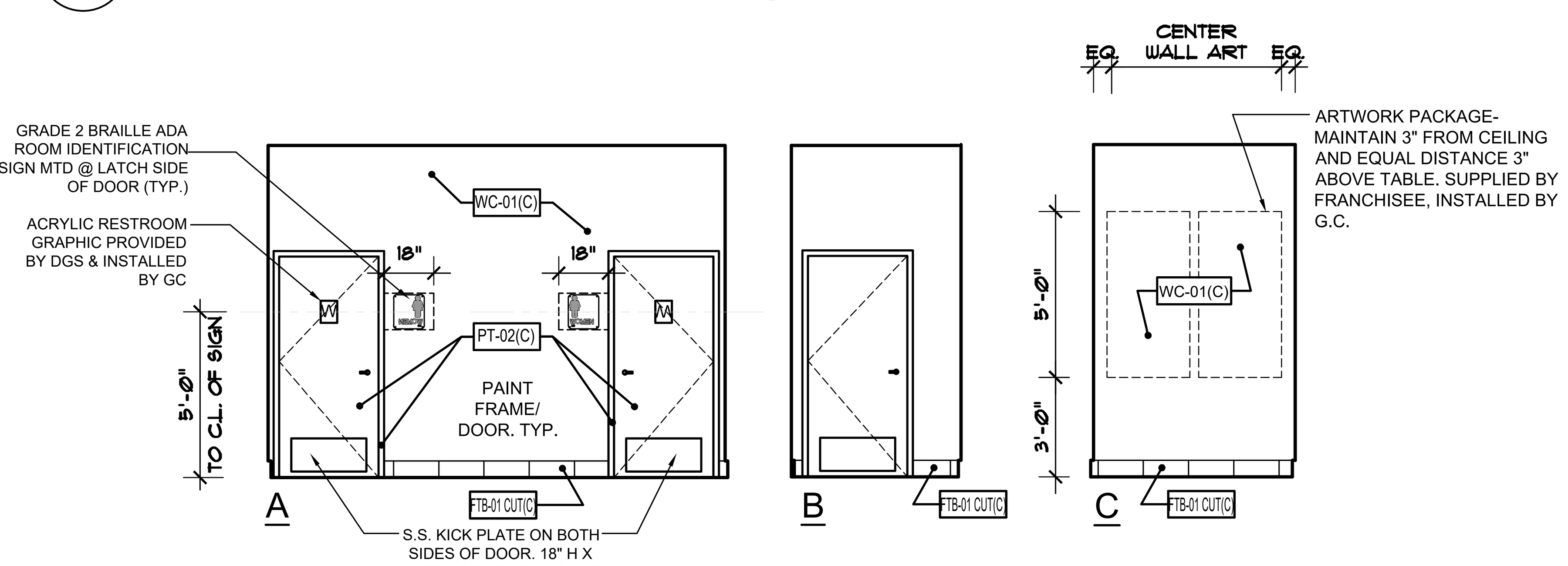

5 / A8.0 INTERIOR ELEVATION @ ALCOVE
SCALE: 1/4" = 1'-0"

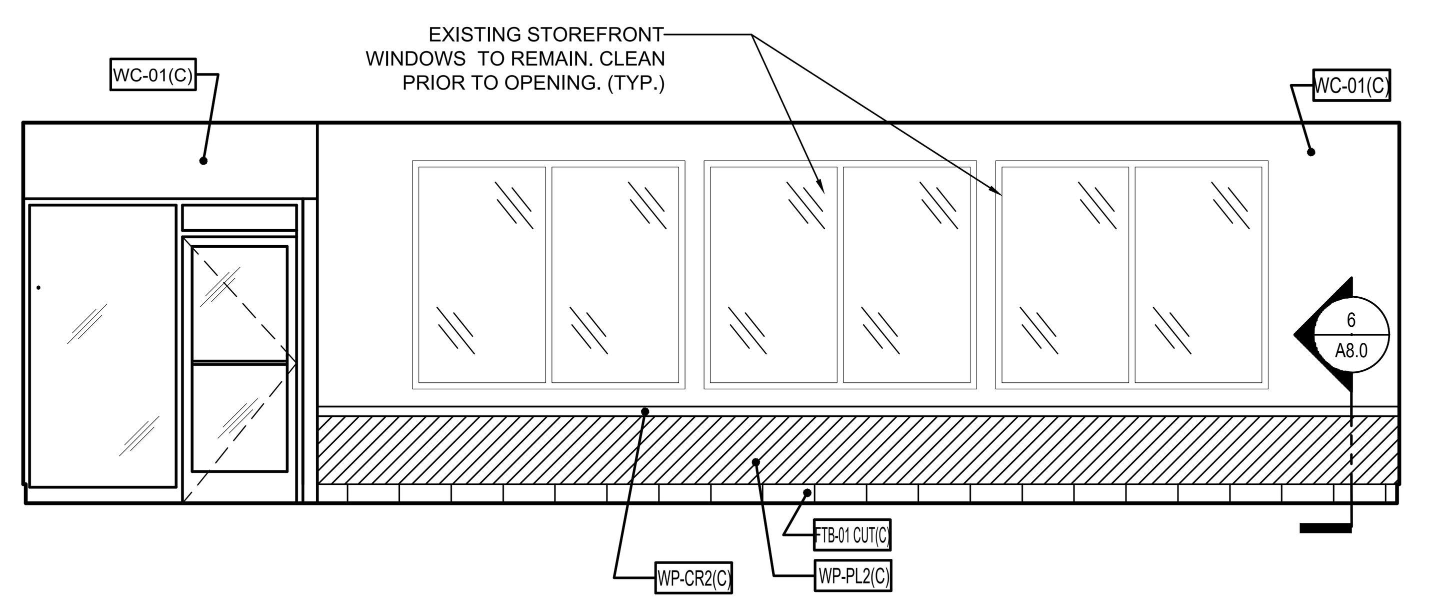

4 / A8.0 INTERIOR ELEVATION @ ENTRANCE
SCALE: 1/4" = 1'-0"

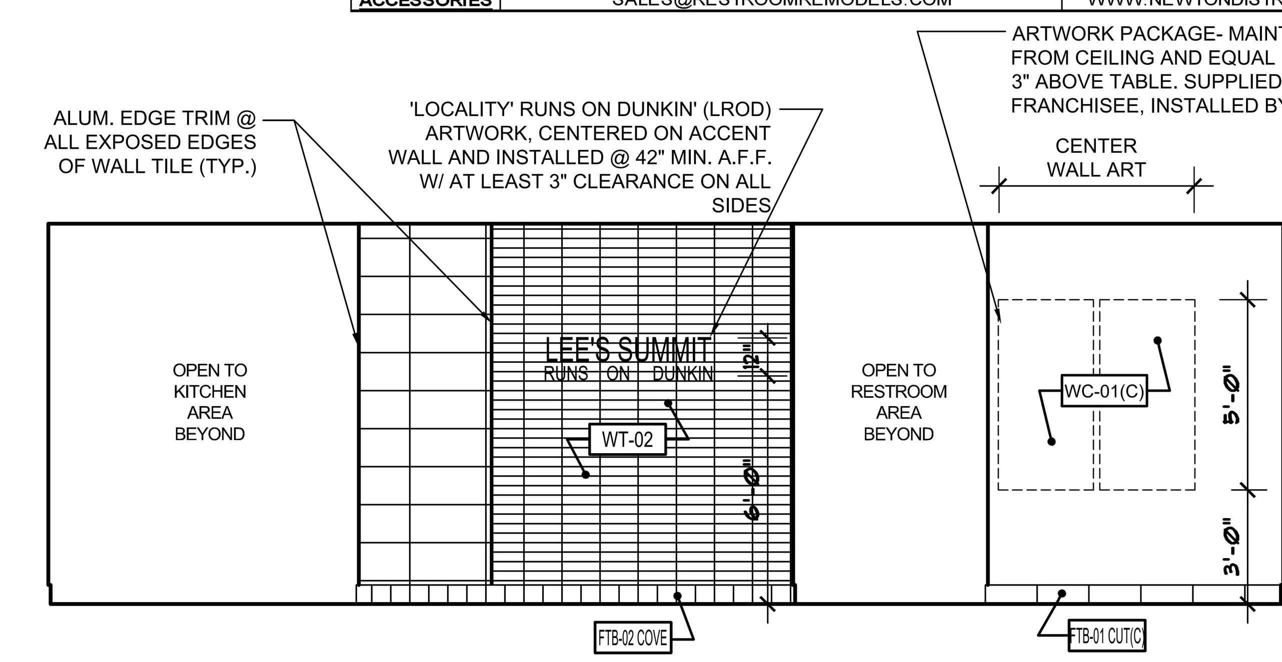

3 / A8.0 INTERIOR ELEVATION @ ENTRANCE
SCALE: 1/4" = 1'-0"

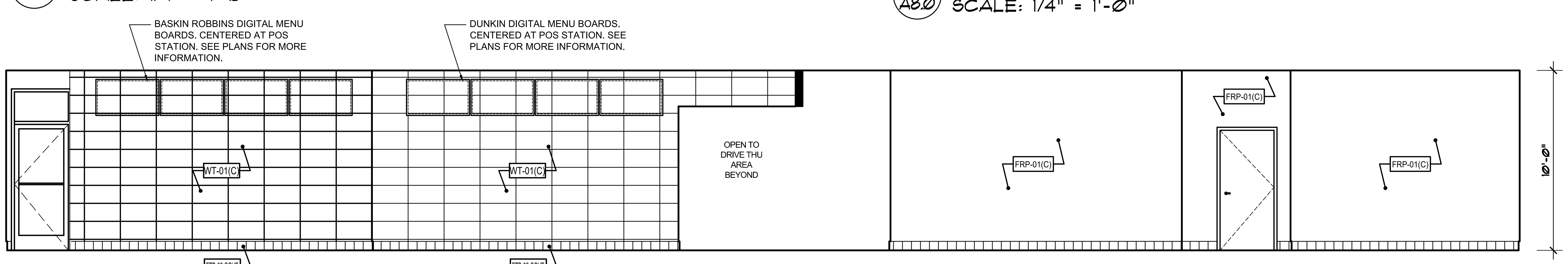

2 / A8.0 INTERIOR ELEVATION @ BACKLINE
SCALE: 1/4" = 1'-0"

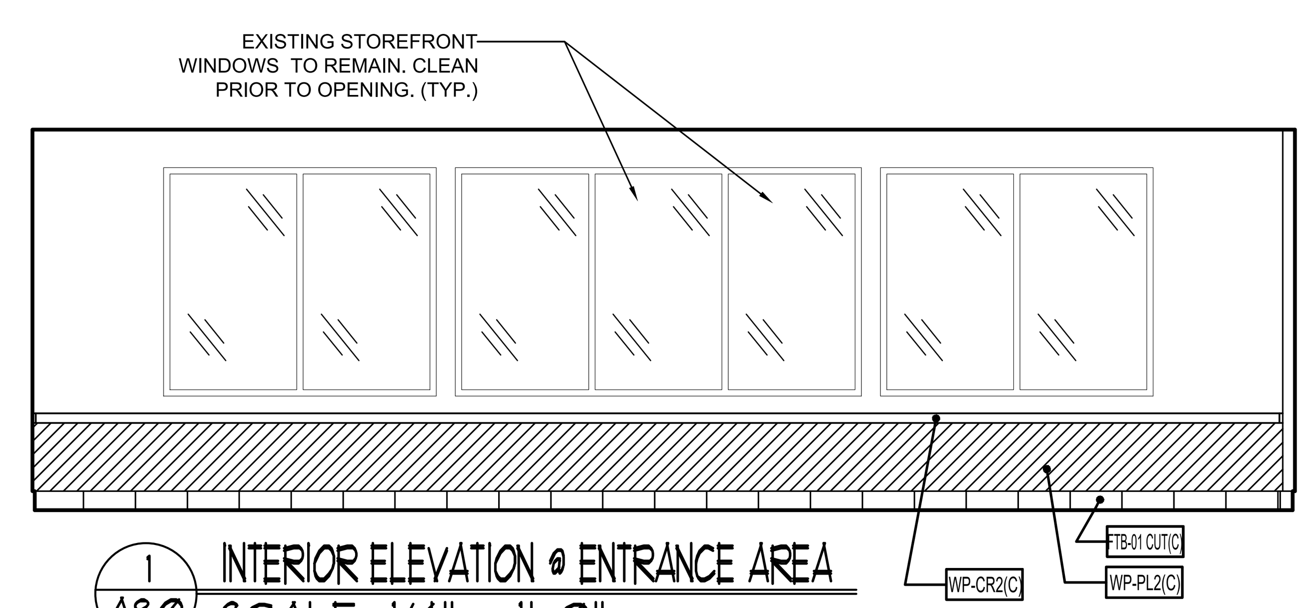

1 / A8.0 INTERIOR ELEVATION @ ENTRANCE AREA
SCALE: 1/4" = 1'-0"

ALBERT TAUS & ASSOCIATES, ARCHITECTS
ALBERT TAUS, A.I.A., ARCHITECT
ARCHITECTURE PLANNING INTERIOR DESIGN ENGINEERING
PHILADELPHIA, PA
PHONE: (215) 698-2516 FAX: (215) 698-7398
atausarchitects.com

THESE PLANS ARE THE PROPERTY OF ALBERT TAUS & ASSOCIATES, ARCHITECTS, AND ARE NOT TO BE USED WITHOUT THE EXPRESSED WRITTEN PERMISSION OR CONSENT OF ALBERT A. TAUS, R.A., A.I.A.

STATE OF MISSOURI
ALBERT A. TAUS
NUMBER A-2015032715
ARCHITECT
MO# A-2015032715
SIGNATURE

DOCUMENTS PREPARED FOR
DDJ21DOUGLAS, LLC
C/O: MR. HOSSAM SHAHIN
109 E. HALE LAKE RD
WARRENSBURG, MO 64093

ATA200602.10

DATE	04/29/21
SCALE	AS NOTED
DRAWN	GR
CKD	DJK
APPD	AAT

NO	DESCRIPTION	DATE
–		
1		
2		
3		
4		
5		
6		

REVISIONS

THESE PLANS ARE CONFIDENTIAL PROPERTY OF DUNKIN' BRANDS INC. UNDER RESTRICTED ACCESS.

PROPOSED PROJECT
DUNKIN'
WITH DRIVE THRU
1100 NE DOUGLAS STREET
LEE'S SUMMIT MO. 64086
NEXT GEN (COOL PALAETTE)
INTERIOR ELEVATIONS

DUNKIN' BRANDS [eatdrinkthink]

A8.0

WOOD LAMINATE

CODE	MATERIAL	MANUFACTURER	PRODUCT #	DESCRIPTION / REMARKS	VENDOR CONTACTS
WD-01	WOOD LAMINATE		SEE MILLWORK FINISHES PL-01 (C)	OPTIONAL UPGRADE FOR COOL PALETTE ONLY	

INTERIOR WALL PAINT

CODE	MATERIAL	MANUFACTURER	PRODUCT #	DESCRIPTION / REMARKS	VENDOR CONTACTS
PT-01 (C)	PAINT	SHERWIN WILLIAMS	LIGHT GREY SW 7671 "ON THE ROCKS"	SHEEN: "SATIN-/-EGGSHELL" - WALL / SOFFIT PAINT WHERE INDICATED	PLACE ORDER WITH LOCAL SHERWIN WILLIAMS STORE FOR A STORE NEAR YOU CALL: 800-474-3794 MARK T. WEINER NATIONAL ACCOUNT EXECUTIVE 93 CHURCH ST BARRINGTON RI 02806 M: 617-438-1408 O: 401-245-5176 EMAIL: MARK.T.WEINER@SHERWIN.COM
PT-01 (W)	PAINT	SHERWIN WILLIAMS	SW 9088 "UTAUPEIA"	WALL / SOFFIT PAINT WHERE INDICATED	
PT-02 (C)	PAINT	SHERWIN WILLIAMS	CHARCOAL SW 7069 "IRON ORE"	SHEEN: FLAT FOR CEILING / SOFFIT; SEMIGLOSS FOR DOORS AND FRAMES	
PT-02 (W)	PAINT	SHERWIN WILLIAMS	SW 6005 "FOLKSTONE"	SHEEN: FLAT FOR CEILING / SOFFIT; SEMIGLOSS FOR DOORS AND FRAMES	
PT-03 (C)	PAINT	SHERWIN WILLIAMS	OFF WHITE SW 6252 "ICE CUBE"	SHEEN: FLAT FOR CEILING; SEMIGLOSS FOR DOORS AND FRAMES	
PT-03 (W)	PAINT	SHERWIN WILLIAMS	SW 9109 "NATURAL LINEN"	SHEEN: FLAT FOR CEILING; SEMIGLOSS FOR DOORS AND FRAMES	

INTERIOR FIBERGLASS REINFORCED PANEL

CODE	MATERIAL	MANUFACTURER	PRODUCT #	DESCRIPTION / REMARKS	VENDOR CONTACTS
FRP-01	FIBERGLASS REINFORCED PANELS	CRANE COMPOSITES	GLASBOARD COLOR: 48- PEARL GRAY TEXTURE: EMBOSSED (PEBBLE FINISH)	BOH/KITCHEN AREAS NOT IN PUBLIC VIEW	CRANE - KEMLITE COMPOSITES VENDOR CONTACT: JEFF TOLLE P: 1-800-435-0080 OR 1-815-467-8600 OR 1-815-274-9125 (DIRECT) C: 330-260-7627 SALES@CRANECOMPOSITES.COM
FRP-01 ALT	FIBERGLASS REINFORCED PANELS	MARLITE	COLOR: P151 "LIGHT GRAY" TEXTURE: EMBOSSED (PEBBLE FINISH)	BOH/KITCHEN AREAS NOT IN PUBLIC VIEW	
FRP-03 (C)	FIBERGLASS REINFORCED PANELS	CRANE COMPOSITES	COLOR: 113DCP 4' X 8' PART # 113 DCP8 OR 4' X 10' PART # 113 DCP10	**COOL PALETTE -** APPROVED FOR BACK LINE WALL IN NEW AND REMODEL RESTAURANTS.	CRANE - KEMLITE COMPOSITES VENDOR CONTACT: JEFF TOLLE P: 1-800-435-0080 OR 1-815-467-8600 OR 1-815-274-9125 (DIRECT) C: 330-260-7627 SALES@CRANECOMPOSITES.COM
FRP-03 (W)	FIBERGLASS REINFORCED PANELS	CRANE COMPOSITES	COLOR: 113DWP 4' X 8' PART # 113 DWP8 OR 4' X 10' PART # 113 DWP10	**WARM PALETTE -** APPROVED FOR BACK LINE WALL IN NEW AND REMODEL RESTAURANTS.	

MILLWORK INTERIOR SOLID SURFACE

CODE	MATERIAL	MANUFACTURER	PRODUCT #	DESCRIPTION / REMARKS	VENDOR CONTACTS
SS-01 (C)	SOLID SURFACE	LG HI-MACS	CUSTOM COLOR: CANTON FINISH: POLISHED	**COOL PALETTE** (HANDOFF,BAKERY AND TAPS)	PROVIDED BY MILLWORK VENDOR
SS-01 (W)	SOLID SURFACE	LG HI-MACS	CUSTOM COLOR: WALLOWA FINISH: POLISHED	**WARM PALETTE** (HANDOFF,BAKERY AND TAPS)	

MILLWORK LAMINATES

CODE	MATERIAL	MANUFACTURER	PRODUCT #	DESCRIPTION / REMARKS	VENDOR CONTACTS
PL-01 (C)	LAMINATE	FORMICA	5887-58 "MILLENNIUM OAK" MATTE FINISH		FORMICA FOR LOCAL DISTRIBUTOR CALL KAREN KENNEY 866-573-3512
PL-02	LAMINATE	FORMICA	837-58 GRAPHITE MATTE FINISH		
PL-03	LAMINATE	WILSONART	4830K-18 SATIN STAINLESS		WILSONART FOR LOCAL DISTRIBUTOR CALL 800-433-3222
		FORMICA	ALTERNATE: M2022-99 BRUSHED ALUMINUM DECO METAL FINISH		
PL-04 (C)	LAMINATE	WILSONART	1500 -60 "GRAY" MATTE FINISH		
PL-04 (W)	LAMINATE	WILSONART	D427-60 "LINEN" MATTE FINISH	**WARM PALETTE OR REMODEL USE ONLY - WHEN KEEPING EXISTING 2015 IMAGE FLOOR TILE (TAN COLOR).**	
PL-05	LAMINATE	FORMICA	459-58 BRITE WHITE MATTE FINISH		
PL-06 (C)	LAMINATE	WILSONART	4786 - 60 "WHITE TIGRIS"	**MILLWORK TABLE TOPS**	
PL-06 (W)	LAMINATE	WILSONART	4847 -60 "DESERT ZEPHYR"	WARM PALETTE OR REMODEL USE ONLY - WHEN KEEPING EXISTING 2015 IMAGE FLOOR TILE (TAN COLOR). MILLWORK TABLE TOPS	
PL-07	LAMINATE	FORMICA	BLACK LAMINATE		
PL-08	NOT USED				
PL-09	LAMINATE	FORMICA	NJ103-3959-48 "COOL WHITE"	MILLWORK CABINETS & INTERIOR SHELF FINISHES	
PL-10 (C)	LAMINATE	WILSONART	4857-60 "SHADOW ZEPHYR"	WAINSCOT	
PL-10 (W)	LAMINATE	FORMICA	5884 "CHESTNUT WOODLINE" MATTE FINISH (SAME AS WP-PL2(W))	**KNEE WALL WARM PALETTE OR REMODEL USE ONLY - WHEN KEEPING EXISTING 2015 IMAGE FLOOR**	

THIN BRICK

CODE	MATERIAL	MANUFACTURER	PRODUCT #	DESCRIPTION / REMARKS	VENDOR CONTACTS
BR-01	NOT USED				
BR-02	THIN BRICK	ENDICOTT BRICK		ENDICOTT BRICK (CREATIVE MATERIALS PRODUCT) (WWW.ENDICOTT.COM) SPEC. SN5 THIN BRICK SIZE: MODULAR - 2 ¼" X 7 5/8" X ½" THICK. INSTALLATION: USE TYPICAL TYPE S MORTAR TO INSTALL WITH A COLOR ADDITIVE TO MATCH THE BRICK FOR THE GROUT.	CONTACT INFORMATION PHONE: 800.207.2967 EXT. 3865 (DUNK) FAX: 518-452-9153 EMAIL: DUNKINTILE@CREATIVEMATERIALSCORP.COM

METAL

CODE	MATERIAL	MANUFACTURER	PRODUCT #	DESCRIPTION / REMARKS	VENDOR CONTACTS
MT-01	METAL		STAINLESS STEEL - #4 FINISH	FABRICATED ITEMS	

VINYL WALL COVERING

CODE	MATERIAL	MANUFACTURER	PRODUCT #	DESCRIPTION / REMARKS	VENDOR CONTACTS
WC-01 (C)	TYPE II VINYL WALL COVERING	DL COUCH	DLC-122 "MINERAL" VERSA ARIES PATTERN 20 OZ TYPE II w/ AQUASAFE	ARCHITECT/G.C. TO CONFIRM FRANCHISEE PREFERENCE ON MANUFACTURER	CLEARLY STATE THAT YOUR ARE A MEMBER OF DUNKIN' BRANDS, INC. STRATEGIC ACCOUNT UPON PURCHASING MATERIAL TO RECEIVE NATIONAL PRICING. KAITLYN FEASTER - ACCOUNT MANAGER 800.366.6839 X326 CUSTOMERSERVICE@MOMTEX.COM
		WOLF GORDON	DUNKIN RIVULET 54" WIDE GOH 31818546 COLOR NEXTGEN NEUTRAL COOL PALETTE		CLEARLY STATE THAT YOUR ARE A MEMBER OF DUNKIN' BRANDS, INC. STRATEGIC ACCOUNT UPON PURCHASING MATERIAL TO RECEIVE NATIONAL PRICING. FAX ORDER FORM TO :718.706.5912 OR ALFREDO.ORTIZ@WOLFGORDON.COM
WC-01 (W)	TYPE II VINYL WALL COVERING	DL COUCH	SKETCH TEX - TEA WASH (T2-TX-20)	ARCHITECT/G.C. TO CONFIRM FRANCHISEE PREFERENCE ON MANUFACTURER	CLEARLY STATE THAT YOUR ARE A MEMBER OF DUNKIN' BRANDS, INC. STRATEGIC ACCOUNT UPON PURCHASING MATERIAL TO RECEIVE NATIONAL PRICING. KAITLYN FEASTER - ACCOUNT MANAGER 800.366.6839 X326 CUSTOMERSERVICE@MOMTEX.COM
	TYPE II VINYL WALL COVERING	WOLF GORDON	DUNKIN RIVULET 54" WIDE GOH 31802393		CLEARLY STATE THAT YOUR ARE A MEMBER OF DUNKIN' BRANDS, INC. STRATEGIC ACCOUNT UPON PURCHASING MATERIAL TO RECEIVE NATIONAL PRICING. FAX ORDER FORM TO :718.706.5912 OR ALFREDO.ORTIZ@WOLFGORDON.COM
WC-02 (C)	TYPE III (VINYL WALL PROTECTION)	DL COUCH	VERSAGAURD HALCYN TYP3 127860 "WINDWARD"	ARCHITECT/G.C. TO CONFIRM FRANCHISEE PREFERENCE ON MANUFACTURER	CLEARLY STATE THAT YOUR ARE A MEMBER OF DUNKIN' BRANDS, INC. STRATEGIC ACCOUNT UPON PURCHASING MATERIAL TO RECEIVE NATIONAL PRICING. KAITLYN FEASTER - ACCOUNT MANAGER 800.366.6839 X326 CUSTOMERSERVICE@MOMTEX.COM
		WOLF GORDON	RAMPART 52"WIDE WG 12691266		CLEARLY STATE THAT YOUR ARE A MEMBER OF DUNKIN' BRANDS, INC. STRATEGIC ACCOUNT UPON PURCHASING MATERIAL TO RECEIVE NATIONAL PRICING. FAX ORDER FORM TO :718.706.5912 OR ALFREDO.ORTIZ@WOLFGORDON.COM
WC-02 (W)	TYPE III (VINYL WALL PROTECTION)	DL COUCH	VERSAGAURD PANAMA LINEN - SUGAR CANE (TYPE III)	ARCHITECT/G.C. TO CONFIRM FRANCHISEE PREFERENCE ON MANUFACTURER	CLEARLY STATE THAT YOUR ARE A MEMBER OF DUNKIN' BRANDS, INC. STRATEGIC ACCOUNT UPON PURCHASING MATERIAL TO RECEIVE NATIONAL PRICING. KAITLYN FEASTER - ACCOUNT MANAGER 800.366.6839 X326 CUSTOMERSERVICE@MOMTEX.COM
		WOLF GORDON	RAMPART 52" WIDE GOH 31802395		CLEARLY STATE THAT YOUR ARE A MEMBER OF DUNKIN' BRANDS, INC. STRATEGIC ACCOUNT UPON PURCHASING MATERIAL TO RECEIVE NATIONAL PRICING. FAX ORDER FORM TO :718.706.5912 OR ALFREDO.ORTIZ@WOLFGORDON.COM
WC-03 (C)	ADVANCED WALL PROTECTION	DL COUCH	DLC-26519C WOOD WALL P3TEC (NATURELLE) (48" WIDE 15 YARD BOLT)	WOOD WALL MUST BE INSTALLED RAILROADED. ALRTERANTE FOR WD-01	CLEARLY STATE THAT YOUR ARE A MEMBER OF DUNKIN' BRANDS, INC. STRATEGIC ACCOUNT UPON PURCHASING MATERIAL TO RECEIVE NATIONAL PRICING. KAITLYN FEASTER - ACCOUNT MANAGER 800.366.6839 X326 CUSTOMERSERVICE@MOMTEX.COM
	NOT USED	WOLF GORDON	SEE DL COUCH WC-03 (C)		CLEARLY STATE THAT YOUR ARE A MEMBER OF DUNKIN' BRANDS, INC. STRATEGIC ACCOUNT UPON PURCHASING MATERIAL TO RECEIVE NATIONAL PRICING. FAX ORDER FORM TO :718.706.5912 OR ALFREDO.ORTIZ@WOLFGORDON.COM
WC-03 (W)	NOT USED	DL COUCH			CLEARLY STATE THAT YOUR ARE A MEMBER OF DUNKIN' BRANDS, INC. STRATEGIC ACCOUNT UPON PURCHASING MATERIAL TO RECEIVE NATIONAL PRICING. KAITLYN FEASTER - ACCOUNT MANAGER 800.366.6839 X326 CUSTOMERSERVICE@MOMTEX.COM
	NOT USED	WOLF GORDON			CLEARLY STATE THAT YOUR ARE A MEMBER OF DUNKIN' BRANDS, INC. STRATEGIC ACCOUNT UPON PURCHASING MATERIAL TO RECEIVE NATIONAL PRICING. FAX ORDER FORM TO :718.706.5912 OR ALFREDO.ORTIZ@WOLFGORDON.COM
WC-04	NOT USED	DL COUCH	SEE WOLF GORDON WC-04	CHARCOAL WALL ALRTERANTE FOR WT-02	CLEARLY STATE THAT YOUR ARE A MEMBER OF DUNKIN' BRANDS, INC. STRATEGIC ACCOUNT UPON PURCHASING MATERIAL TO RECEIVE NATIONAL PRICING. KAITLYN FEASTER - ACCOUNT MANAGER 800.366.6839 X326 CUSTOMERSERVICE@MOMTEX.COM
	TYPE III (WALL PROTECTION)	WOLF GORDON	RAMPART 52" WIDE CHARCOAL GOH 31818583 TYPE III WALL PROTECTION,		CLEARLY STATE THAT YOUR ARE A MEMBER OF DUNKIN' BRANDS, INC. STRATEGIC ACCOUNT UPON PURCHASING MATERIAL TO RECEIVE NATIONAL PRICING. FAX ORDER FORM TO :718.706.5912 OR ALFREDO.ORTIZ@WOLFGORDON.COM

WALL PROTECTION

CODE	MATERIAL	MANUFACTURER	PRODUCT #	DESCRIPTION / REMARKS	VENDOR CONTACTS
WP-PL1 (C)	NOT USED				
WP-PL1 (W)	NOT USED				
WP-PL2 (C)	LAMINATE	WILSONART	4857-60 "SHADOW ZEPHYR" MATTE FINISH (SAME AS PL-10(C))	PLAM WALL PANELS 48" x 96" (GC PROVIDED ITEM - GC CAN PURCHASE FROM DUNKIN MILLWORK VENDOR)	
WP-PL2 (W)	LAMINATE	FORMICA	5884 "CHESTNUT WOODLINE" MATTE FINISH (SAME AS PL-10(W))	**WARM PALETTE OR REMODEL USE ONLY -** PLAM WALL PANELS 48" x 96" (GC PROVIDED ITEM - GC CAN PURCHASE FROM DUNKIN MILLWORK VENDOR)	
WP-CR1		IMPACT SPECIALTIES	COLOR: "BRUSHED NICKEL"	SARATOGA CHAIR RAIL 3" H x 114"L x 1/2" THK; VA200 "BRUSHED NICKEL" CORNER GUARD	CLEARLY STATE THAT YOUR ARE A MEMBER OF DUNKIN' BRANDS, INC. STRATEGIC ACCOUNT UPON PURCHASING MATERIAL TO RECEIVE NATIONAL PRICING FOR ASSISTANCE, PLEASE CONTACT CUSTOMER SERVICE AT PHONE: 888-424-6287
WP-CR2 (C)	SOLID SURFACE	LG HI-MACS	CUSTOM COLOR: CANTON (SEE AS SS-01(C)) FINISH: POLISHED EDGE PROFILE: REFERENCE MILLWORK DETAIL ALUMINUM PROFILE: SCHLUTER, JOLLY	SOLID SURFACE CHAIR RAIL	
WP-CR2 (W)	SOLID SURFACES	LG HI-MACS	CUSTOM COLOR: G122 BAMBOO LEAF (SEE AS SS-01 (W)) FINISH: POLISHED EDGE PROFILE: REFERENCE MILLWORK DETAIL ALUMINUM PROFILE: SCHLUTER, JOLLY	SOLID SURFACE CHAIR RAIL	
WP-C1		IMPACT SPECIALTIES	COLOR: "BRUSHED NICKEL" VA-200 CORNER 72" X 11/2" X 1 1/2"	CHAIR RAIL CORNER PIECE	CLEARLY STATE THAT YOUR ARE A MEMBER OF DUNKIN' BRANDS, INC. STRATEGIC ACCOUNT UPON PURCHASING MATERIAL TO RECEIVE NATIONAL PRICING FOR ASSISTANCE, PLEASE CONTACT CUSTOMER SERVICE AT PHONE: 888-424-6287

ALTERNATE INTERIOR FLOOR FINISH

CODE	MATERIAL	MANUFACTURER	PRODUCT #	DESCRIPTION / REMARKS	VENDOR CONTACTS
AP-01	REVERB TILE	NEW ENGLAND SOUND PROOFING	TRADITIONAL SERIES	ACOUSTICAL CEILING TILE TO BE USED @ OPEN CEILING APPLICATION.	NEW ENGLAND SOUND PROOFING 40 NORFOLK AVENUE, EASTON, MA, 02375 PHONE: 781-710-1261

DAL TILE PALETTE

CODE	MATERIAL	MANUFACTURER	PRODUCT #	DESCRIPTION / REMARKS	VENDOR CONTACTS
G-01 (C)	GROUT	MAPEI	ULTRSCOLOR PLUS FA # 107 - IRON	CUSTOMER AREA GROUT- SEE FINISH SCHEDULE FLOOR TILE (FT) COMMENTS FOR LOCATION	ALL INQUIRIES MUST MENTION THE NATIONAL ACCOUNT WITH DUNKIN BRANDS PHONE: 877-556-5728 EMAIL:NATIONAL.ACCOUNTS@DALTILE.COM DBI REP : PAULA TOSTI 978.835.7793 EMAIL: PAULA.TOSTI@DALTILE.COM
G-01 (W)	GROUT	LATRICRETE	# 35 - MOCHA	CUSTOMER AREA GROUT- SEE FINISH SCHEDULE FLOOR TILE (FT) COMMENTS FOR LOCATION	
		CUSTOM TILE PRODUCTS	# 540 - TRUFFLE	CUSTOMER AREA GROUT- SEE FINISH SCHEDULE FLOOR TILE (FT) COMMENTS FOR LOCATION	
G-02	GROUT	MAPEI	ULTRSCOLOR PLUS FA # 47 - CHARCOAL	BACK OF HOUSE GROUT- SEE FINISH SCHEDULE FLOOR TILE (FT) COMMENTS FOR LOCATION	
G-03	GROUT	MAPEI	ULTRSCOLOR PLUS FA # 38 - AVALANCHE	BACK LINE GROUT- SEE FINISH SCHEDULE WALL TILE (WT) COMMENTS FOR LOCATION	
G-04	GROUT	MAPEI	ULTRSCOLOR PLUS FA # 10 - BLACK	BRICK TILE GROUT- SEE FINISH SCHEDULE FLOOR TILE (FT) OR WALL TILE (WT) COMMENTS FOR LOCATION	
G-05	GROUT	MAPEI	ULTRSCOLOR PLUS FA # 09 - GRAY	RESTROOM GROUT- SEE FINISH SCHEDULE WALL TILE (WT) COMMENTS FOR LOCATION	
FT-01 (C)	PORCELAIN TILE	DAL TILE	DB PORTFOLIO POR -- 12X24 FLOOR PF05 "ASH GREY STD" # PF0512241PK	**COOL PALETTE -** 12"X24" FRONT OF HOUSE (PUBLIC AREAS) AND RESTROOM AREA TILE - USE W/ GROUT G-01 (C)	
FT-01 (W)	PORCELAIN TILE	DAL TILE	AFFINITY TILE - BIEGE AF02 12" X 24" / MATTE FINISH	**WARM PALETTE-** 12"X24" FRONT OF HOUSE (PUBLIC AREAS) AND RESTROOM AREA TILE - USE W/ GROUT G-04	
FT-01 (E)	PORCELAIN TILE	DAL TILE	**REMODEL KEEPING EXISTING FLOOR TILE**	2015 IMAGE TILE (TAN COLOR) MAYBE AVAILIABLE (COLOR MATCH REQUIRED) FROM DAL TILE N500 "PUNKIN LATTE"	
FT-02	QUARRY TILE	DAL TILE	DB TEXTURES - 6X6X1/2 FLOOR CE 0T03 "ASHEN GRAY STD" # 0T03661P	**COOL AND WARM PALETTE -** 6"X6"; BACKLINE/SERVICE AREA & B.O.H. AREAS - USE W/ GROUT G-02	
FT-02 (E)	QUARRY TILE	DAL TILE	**REMODEL KEEPING EXISTING FLOOR TILE**		
FT-03 (W)	PORCELAIN TILE	DAL TILE	SADDLE BROOK TILE - FARMHOUSE SD14 6" X 46" MATTE FINISH	**WARM PALETTE -** 6" X 36" TILE SEATING AREA ACCENT FLOOR TILE. USE W/ GROUT G-04	
FTB-01 CUT (C)	PORCELAIN TILE	DAL TILE	DB PORTFOLIO POR -- 12X24 FLOOR PF05 "ASH GREY STD" # PF0512241PK	**COOL PALETTE -** CUT 12"X24" FLOOR TILE W/ BRUSHED NICKEL SCHLUTER STRIP CAP JOLLY - ANIGB COLOR MATCH WALL TILE ALUMINUM TRIM MATTE WHITE TSDA DARK ANTHRACITE TSSG STONE GREY	
FTB-01 CUT (W)	PORCELAIN TILE	DAL TILE	PORTFOLIO 12X24 FLOOR PF-03 "FANGO	**WARM PALETTE -** CUT 12"X24" FLOOR TILE W/ BRUSHED NICKEL SCHLUTER STRIP CAP JOLLY - ANIGB COLOR MATCH WALL TILE ALUMINUM TRIM MATTE WHITE TSDA DARK ANTHRACITE TSSG STONE GREY USE W/ GROUT G-04	
FTB-01 COVE (C)	PORCELAIN TILE	DAL TILE	DB PORTFOLIO PORC - 6X12 COVE BASE HM05 "ASH GREY STD" # PF05P36C9TB1P2	**COOL PALETTE -** 6"X12" COVED BASE TILE (OPTIONAL UPGRADE FOR FRONT OF HOUSE PUBLIC AREAS AND RESTROOMS)	
FTB-01 COVE (W)	PORCELAIN TILE	DAL TILE	PORTFOLIO COVE BASE PF-03 "FANGO"	**WARM PALETTE -** USE W/ GROUT G-04	
FTB-02 COVE	QUARRY TILE WALL BASE	DAL TILE	DB TEXTURES Q3565U 0T03 "ASHEN GRAY STD" # 0T03Q3565U1P	**COOL AND WARM PALETTE -** 5"X 6" COVE BASE- SEE NATIONAL ACCOUNTS FOR INSIDE/OUTSIDE CORNER PRODUCT NUMBERS # 0T03Q3565U1P - COVE BASE # 0T03QCL3565U1P - LEFT CORNER # 0T03QCR3565U1P - RIGHT CORNER # 0T03QB3565U1P - INSIDER CORNER USE W/ GROUT G-02	
FTB-03 COVE(W)	PORCELAIN TILE	DAL TILE	SADDLE BROOK TILE - FARMHOUSE SD14 6" X 36" MATTE FINISH	**WARM PALETTE -** USE W/ 6" X 36" COVE TILE WALL BASE @ SEATING AREA ACCENT FLOOR TILE. USE W/ GROUT G-04	
WT-01 (C)	PORCELAIN TILE	DAL TILE	DB DUNKIN SWITCH ACCENT 12" x 24" (backline wall) # N812DD12241P2	**COOL PALETTE -** NSTALL PER PATTERN SHOWN IN DETAIL # 5/A9.0 BACKLINE WALL TIILE - 12X24 BACKLINE WALL TIILE - USE W/ GROUT G-03 ALUMINUM PROFILE: SCHLUTER, JOLLY, MBW MATTE WHITE HEIGHT 10 mm (3/8") A100MBW	
WT-01 (W)	PORCELAIN TILE	DAL TILE	DB DUNKIN SWITCH WARM ACCENT 12" x 24" (backline wall) # N515SA0212224P2	**WARM PALETTE OR REMODEL USE ONLY - WHEN KEEPING EXITING 2015 IMAGE FLOOR TILE (TAN COLOR)** INSTALL PER PATTERN SHOWN IN DETAIL # 5/A9.0 BACKLINE WALL TIILE - USE W/ GROUT G-03 ALUMINUM PROFILE: SCHLUTER, JOLLY, MBW MATTE WHITE HEIGHT 10 mm (3/8") A100MBW	
WT-02	PORCELAIN TILE	DAL TILE	DB PORTFOLIO POR -- 6X24 FLOOR PF09 "CHARCOAL" # PF096241PK	**COOL AND WARM PALETTE -** BRICK STYLE 6" X 24" OR "4 X 12" SP. ORDER CUT TO SIZE (WT-2) - USE W/ GROUT G-04 ALUMINUM PROFILE: SCHLUTER, JOLLY, TSDA DARK ANTHRACITE HEIGHT 8 mm (5/16") A80TSDA	
WT-03	PORCELAIN TILE	DAL TILE	DB FIELD - 6"X18" (RESTROOMS) COLOR WHEEL LINEAR - ARCTIC WHITE # 0790 MATTE	**COOL AND WARM PALETTE -** RESTROOMS INSTALL IN A STACK BOND PATTERN 6"X18" - USE W/ GROUT G-5 ALUMINUM PROFILE: SCHLUTER, JOLLY, MBW MATTE WHITE HEIGHT 8 mm (5/16") A80MBW	
WT-04 (C)	PORCELAIN TILE	DAL TILE	DB BLOCK PARTY 6" X 6" - 2TILE ACCENT (RESTROOMS) # N515BP01661P4	**COOL PALETTE -** INSTALL PER PATTERN SHOWN IN DETAIL # 3/A9.0 RESTROOM ACCENT 6" X 6" - USE W/ GROUT G-5 ALUMINUM PROFILE: SCHLUTER, JOLLY, TSSG STONE GREY 8 mm (5/16") A80TSSG	
WT-04 (W)	PORCELAIN TILE	DAL TILE	DB BLOCK PARTY 6" X 6" - 2TILE ACCENT (RESTROOMS) #N515BP02661P4	**WARM PALETTE OR REMODEL USE ONLY WHEN KEEPING EXISTING 2015 IMAGE FLOOR TILE (TAN COLOR)** INSTALL PER PATTERN SHOWN IN DETAIL # 3/A9.0 - BACKLINE WALL TIILE - RESTROOM ACCENT INSTALL IN A RANDOM PATTERN 6" X 6" - USE W/ GROUT G-5 ALUMINUM PROFILE: SCHLUTER, JOLLY, TSSG STONE GREY 8 mm (5/16") A80TSSG	

CEILING FINISH

CODE	MATERIAL	MANUFACTURER	PRODUCT #	DESCRIPTION / REMARKS	VENDOR CONTACTS
CT-01	ACOUSTIC CEILING TILE	ARMSTRONG	**WHITE FACTORY FINISH** #1732 WH (2' X 2')	WHITE, FINE FISSURED TILE WITH WHITE GRID [ARMSTRONG/#7300 WH/ SIZE: 5/16"]	PLEASE CONTACT ARMSTRONG @ 1-800-442-4212. CLEARLY STATE THAT YOUR ARE A MEMBER OF DUNKIN' BRANDS, INC. STRATEGIC ACCOUNT UPON PURCHASING MATERIAL TO RECEIVE NATIONAL PRICING.
CT-02	CEILING TILE AND GRID SYSTEM	ARMSTRONG	**BLACK FACTORY FINISH** 1728 BL (2' X 2')	BLACK, FINE FISSURED-TILE AND BLACK GRID NOTE: STANDARD CLG. TILE IN PUBLIC AREAS (SALES & SEATING AREA)- FOR NEW &	
CT-03	VINYL FACED CLG TILE	ARMSTRONG	#870 (2' X 4') / #868 (2' X2')	WHITE TILE AND GRID	

ALTERNATE INTERIOR FLOOR FINISH

CODE	MATERIAL	MANUFACTURER	PRODUCT #	DESCRIPTION / REMARKS	VENDOR CONTACTS
EXP-01	EPOXY FLOOR	STONHARD EPOXY	STONSHIELD HRI MEDIUM TEXTURE COLOR: GLACIER	APPROVED FOR BEHIND POS FRONT LINE AND KITCHEN AREAS ONLY.	STONHARD EPOXY SCOTT GARSTKA 413-237-9267; sgarstka@stonhard.com

ALBERT TAUS & ASSOCIATES, ARCHITECTS
ALBERT TAUS, A.I.A., ARCHITECT
ARCHITECTURE PLANNING INTERIOR DESIGN ENGINEERING
P H I L A D E L P H I A , P A
PHONE: (215) 698 - 2516 FAX: (215) 698 - 7398
atausarchitects.com

THESE PLANS ARE THE PROPERTY OF ALBERT TAUS & ASSOCIATES, ARCHITECTS, AND ARE NOT TO BE USED WITHOUT THE EXPRESSED WRITTEN PERMISSION OR CONSENT OF ALBERT A. TAUS, R.A., A.I.A.

STATE OF MISSOURI
ALBERT A. TAUS
NUMBER A-2015032715
ARCHITECT
MO# A-2015032715
SIGNATURE

DOCUMENTS PREPARED FOR
DDJ21DOUGLAS, LLC
C/o: MR. HOSSAM SHAHIN
109 E. HALE LAKE RD
WARRENSBURG, MO 64093

ATA200602.10

DATE	04/29/21
SCALE	AS NOTED
DRAWN	GR
CKD	DJK
APPD	AAT

NO	DESCRIPTION	DATE
6		
5		
4		
3		
2		
1		
–		

REVISIONS

THESE PLANS ARE CONFIDENTIAL PROPERTY OF DUNKIN' BRANDS, INC. UNDER RESTRICTED ACCESS.

PROPOSED PROJECT
DUNKIN'
WITH DRIVE THRU
1100 NE DOUGLAS STREET
LEE'S SUMMIT MO. 64086
NEXT GEN (COOL PALAETTE)

FINISHED SCHEDULE

DUNKIN' BRANDS [eatdrinkthink]

A8.1

NATIONAL ACCOUNT SOURCE INFO.

NOTE:

1. FOR COMPLETE NATIONAL ACCOUNTS SOURCE INFORMATION, REFER TO THE DUNKIN' BRANDS NATIONAL ACCOUNT WEB SITE (http://extranet.dunkinbrands.com). TO OBTAIN A USER NAME AND PASSWORD PLEASE CONSULT YOUR LOCAL CONSTRUCTION MANAGER.
2. CONTRACTOR TO IDENTIFY ONESELF AS WORKING WITH DUNKIN' BRANDS WHEN ORDERING FROM NATIONAL ACCOUNTS.

ACOUSTICAL CEILING TILES & GRIDS (ALL REGIONS)
ARMSTRONG WORLD INDUSTRIES
VENDOR CONTACT: MAUREEN CONE
P: 703-389-2701
E: MMCONE@ARMSTRONGCEILINGS.COM
WWW.ARMSTRONG.COM/CEILINGS

ACOUSTICAL PANELS
NEW ENGLAND SOUND PROOFING
P: 781-710-1261
WWW.NEWENGLANDSOUNDPROOFING.COM

ALLEN INDUSTRIES
VENDOR CONTACT: KEITH WHITLEY
P: 919-410-1234
E:
KEITH.WHITLEY@ALLENINDUSTRIES.COM
WWW.ALLENINDUSTRIES.COM

ATM SERVICES
CARDTRONICS
VENDOR CONTACT: TOM SPOONER
P: 888-890-0600 X 14240
E: TSPOONER@CARDTRONICS.COM
WWW.CARDTRONICS.COM

JARRETT SERVICES
VENDOR CONTECT: ERIC JOHNSTONE
P: 1-800-935-0107 X 204
E: SALES@JARRETTFORCASH.COM
WWW.JARRETTFORCASH.COM

AWNING FABRICS AND VINYL:
ARLON:
VENDOR CONTACT: KEN HUGGINS
P: 714-985-6310
E: KHUGGINS@ARLON.COM
WWW.ARLON.COM

BOLLARD COVERS
IDEAL SHIELD
VENDOR CONTACT:
1-800-731-1722

DENNIS KNITTEL
PHONE: (313)551-2275
DKNITTEL@IDEALSHIELD.COM

BINDU ABRAHAM
PHONE: (313)551-2283
BABRAHAM@IDEALSHIELD.COM
WWW.IDEALSHIELD.COM

COKE COOLERS
COKE
VENDOR CONTACT: CARISSA BRUCE
P: (800) 531-2238 EXT. 3716
E: CABRUCE@COCA-COLA.COM

COMING SOON BANNERS
LSM NOW
P: 1-855-576-6669
E: LSMNOW@WELDMEDIA.COM
WWW.LSMNOW.NET/LOGIN.ASPX

DRIVE THRU HEADSETS
3M
VENDOR CONTACT: BILL MUENKEL
P: 952-484-4875
E: WEMUENKEL@MMM.COM
WWW.3M.COM/FOODSERVICE

HME
VENDOR CONTACT: PATRICK KELLY
C: 858-535-6042
E: PKELLY@HME.COM
WWW.HME.COM
DRIVE THRU TIMERS

ACRELEC
SCOTT MARENTAY
P: 412-680-3909

HME
VENDOR CONTACT: PATRICK KELLY
C: 858-535-6042
E: PKELLY@HME.COM
WWW.HME.COM

DRIVE THRU MENU BOARDS
EVERBRITE
VENDOR CONTACT: ANA DOMINGUEZ
P: 414-529-7107
E: ADOMINGUEZ@EVERBRITE.COM
WWW.EVERBRITE.COM

VGS
VENDOR CONTACT: ELIOT COHEN
C: 201-528-2122
E: ECOHEN@VGS-INC.COM
WWW.VGS-INC.COM

HILTON DISPLAYS
VENDOR CONTACT: PRESTON SMITH
P: 865-320-6663
E: PRESTONSMITH@HILTONDISPLAYS.COM
WWW.HILTONDISPLAYS.COM

PERSONA SIGNS
VENDOR CONTACT: SUSAN KOELZER
P: 605-882-2244 X 390
E: SKOELZER@PERSONASIGNS.COM
WWW.PERSONASIGNS.COM

DRIVE THRU WINDOWS
SALES: READY@READY-ACCESS.COM

READY ACCESS
VENDOR CONTACT: KELLY MCGOLDRICK
P: 630-876-7766 EXT. 113
E: KELLY@READY-ACCESS.COM
WWW.READY-ACCESS.COM

QUIKSERV
INSIDE SALES DEPT./ORDER ENTRY
SALES@QUIKSERV.COM
BRANDI LAIRD
JESSICA WILLIAMS
OR
BRANDI LAIRD
PHONE: 713-849-5882

TECHNICAL & PARTS SUPPORT
BRIAN COBLE

NATIONAL ACCOUNTS MANAGER
WADE ARNOLD
11441 BRITTMORE PARK DRIVE
HOUSTON, TX 77041
PHONE: 713-849-5882
FAX: 713-849-5708

DRIVE THRU STENCIL
DGS RETAIL
VENDOR CONTACT: KAREN MCCUE
E: KARENMCCUE@DGSRETAIL.COM
P: 508-337-2990
F: 508-337-5040
WWW.DGSRETAIL.COM

PAVEMENT STENCIL COMPANY
P: 800-250-5547
E: STENCILS@PAVEMENTSTENCIL.COM
WWW.PAVEMENTSTENCIL.COM

ELECTRIC PANELS & BREAKERS
VILLA LIGHTING
VENDOR CONTACT: DEANNA MCCLANAHAN
P: 1-800-325-0963
E:
DEANNA.MCCLANAHAN@VILLALIGHTING.COM
WWW.VILLALIGHTING.COM

EPOXY FLOORING
STONHARD
VENDOR CONTACT: SCOTT GARSTKA
C: 413-237-9267
P: 800-854-0310 OFFICE X-5158
F: 856-321-7510
E: SGARSTKA@STONHARD.COM
WWW.STONHARD.COM

EXTERIOR INSULATED FIBERGLASS SYSTEMS (EIFS)
DRYVIT SYSTEMS
VENDOR CONTACT: ROBERT DAZEL
P: 734-276-0404
E: BOB.DAZEL@DRYVIT.COM
WWW.DRYVIT.COM

EXTRUDED METAL CHANNEL @ EXTERIOR
AGI
VENDOR CONTACT: RANDY KERR
P: 800-877-3810 EXT.3248
E: RKERR@AGI.NET
WWW.AGI.NET

HORACIO'S SHEET METAL
VENDOR CONTACT: MICHAEL TAVARES
P: 508-985-9940
F: 508-985-9965
E: MIKE@HORACIOS.COM
WWW.HORACIOS.COM

TAMLYN - XTREME TRIM
VENDOR CONTACT: IAN DANIELS
P: 713-446-3075
E: IDANIELS@TAMLYN.COM
WWW.TAMLYN.COM

FIBERGLASS REINFORCED PANELS (F.R.P.)
CRANE - KEMLITE COMPOSITES
VENDOR CONTACT: JEFF TOLLE
P: 1-800-435-0080 OR 1-815-467-8600 OR
1-815-274-9125 (DIRECT)
C: 330-260-7627
E: SALES@CRANECOMPOSITES.COM
WWW.CRANECOMPOSITES.COM

MARLITE
VENDOR CONTACT: JAMIE MCEDWARD
P: 800-377-1221 OR 603-924-9128
F: 330-343-4668
C: 330-260-7627
E: JMCEDWARD@MARLITE.COM
WWW.MARLITE.COM

HVAC ROOFTOP UNITS
TRANE
VENDOR CONTACT: JONATHAN RALYS
P: 781-305-1335
F: 781-938-8912
E: JONATHAN.RALYS@TRANE.COM
WWW.TRANE.COM

CARRIER CORPORATION
WWW.CARRIER.COM
ORDER MANAGER: CAROL VAVONESE
OFFICE PHONE: 315-432-3254
EMAIL: CAROL.J.VAVONESE@CARRIER.UTC.COM
EMAIL: STRATEGICACCOUNTS2@CARRIER.UTC.COM

ACCOUNT GENERAL MANAGER: PAUL WITZ
CELL PHONE: 315-317-2481
EMAIL: PAUL.WITZ@CARRIER.UTC.COM

SERVICE CONTACT: DEREK BIRDSALL
CELL PHONE: 315-726-2255
EMAIL: DEREK.BIRDSALL@CARRIER.UTC.COM

BUSINESS MANAGER: ROB ROHDE
OFFICE PHONE: 315-432-3377
EMAIL: SCOTT.GILLISPIE@CARRIER.UTC.COM

RHEEM MANUFACTURING COMP.
WWW.RHEEM.COM
VENDOR CONTACT: LUKE BABEY
P: 904-271-1126
E: LUKE.BABEY@RHEEM.COM

IN STORE MUSIC
FRANCHISEES TO SOURCE LOCALLY

INTERIOR MENU BOARDS
(STATIC)
VGS
VENDOR CONTACT: ELIOT COHEN
C: 201-528-2122
E: ECOHEN@VGS-INC.COM
WWW.VGS-INC.COM

(DIGITAL)
TEXAS DIGITAL
P: 877.504.4887 OPTION 2
E: DUNKIN.TDS@NCR.COM

KITCHEN HOODS/EXHAUST SYSTEMS
CAPTIVE-AIRE SYSTEMS
DAVID CRITTENDEN
P: 813-435-3388
E: REG62@CAPTIVEAIRE.COM
WWW.CAPTIVEAIR.COM

KITCHEN SWING DOOR
ELIASON CORPORATION
VENDOR CONTACT: JOE DUSENBERY
P: (800) 828-3655
F: (800) 828-3755
E: DOORS@ELIASONCORP.COM

LAMINATES
FORMICA
FOR LOCAL DISTRIBUTOR CALL
KAREN KENNEY
866-573-3512
E: K.KENNEY@FORMICA.COM
REP: JEAN MARIE REMICK
O: (781) 235-4165
C: (617) 217-8146
JEANMARIE.BISSON@FORMICA.COM
WWW.FORMICA.COM

WILSONART
FOR ORDERS CALL
800-433-3222 FOR A LOCAL DISTRIBUTOR.
REPRESENTATIVE: AMY MORGENWECK
P: 917.951.6524
E: MORGENA@WILSONART.COM

LIGHTING FIXTURES: INTERIOR & EXTERIOR
VILLA LIGHTING
VENDOR CONTACT: DEANNA MCCLANAHAN
P: 1-800-325-0963
E:
DEANNA.MCCLANAHAN@VILLALIGHTING.COM
WWW.VILLALIGHTING.COM

SPECIALTY LIGHTING GROUP
VENDOR CONTACT: ANUSH KAZARIAN &
LORRAINE GARIGLIANO
P: 508-922-0786
P: 860-767-0110 X 252
E: ANUSH.KAZARIAN@SSLIGHTING.COM
OR DUNKIN@SSLIGHTING.COM
WWW.SSLIGHTING.COM

MILLWORK/EQUIPMENT CONSOLIDATOR
QUALSERV
VENDOR CONTACT: HEATH HAYDON
P: 479-420-0298
E: HHAYDON@QUALSERVCORP.COM
WWW.QUALSERVCORP.COM

HOCKENBERGS
VENDOR CONTACT: TOM NEMMERS
P: 913-526-9816
E: TOMN@HOCKENBERGS.COM
WWW.HOCKENBERGS.COM
CONCEPT SERVICES
VENDOR CONTACT: CHRIS PARNELL
P: 512-343-3100
E: CPARNELL@CONCEPTSERV.COM

MILLWORK FABRICATOR
HOMELAND BUILDERS
VENDOR CONTACT: BRIAN RIBEIRO
P: 508-677-0401 X 221
E: BRIANR@HOMELANDBUILDERS.COM
WWW.HOMELANDBUILDERS.COM

HORACIO'S SHEET METAL
VENDOR CONTACT: MICHAEL TAVARES
P: 508-985-9940
F: 508-985-9965
E: MIKE@HORACIOS.COM
WWW.HORACIOS.COM

NEXTGEN "D" DOOR HANDLES:
TRIMCO
VENDOR CONTACT:
P: 323.262.4191 X 2
E: CSR@TRIMCOHARDWARE.COM

OLD STYLE "D" DOOR HANDLES:
MICHAEL HEALY DESIGNS
VENDOR CONTACT: NATASHA DURAND
P: 1-800-995-0988
E:
CUSTOMERSERVICE@MICHAELHEALY.COM

OUTSIDE FURNITURE: (LIGHT WEIGHT)
KEY OFFICE INTERIORS
ACCOUNT MANAGER: DOUGLAS BUMSTEAD
P: 857-991-1376
F: 617-439-0322
E:
DUNKINORDERS@KEYOFFICEINTERIORS.COM

UMBRELLAS:
EAST COAST UBRELLAS
VENDOR CONTACT: NICOLE MASON
P: 910-462-2500 X 1223
E:
UMBRELLAS@EASTCOASTUMBRELLA.COM

TUUCI
VENDOR CONTACT: TAMMY LENHAM
P: 305-637-6881
E: TLENHAM@TUUCI.COM

PATIO

FLORIDA SEATING
VENDOR CONTACT: ERROL ROSARIO
P: 727-540-9802
E: ERROL@FLORIDASEATING.COM

HJC (RAILING)
VENDOR CONTACT: DAVID LIGHTFOOT
P: 479-366-0642
E: DAVID. LIGHTFOOT@HJCINC.COM

PAINT
SHERWIN WILLIAMS
MARK T. WEINER
NATIONAL ACCOUNT EXECUTIVE
93 CHURCH ST
BARRINGTON RI 02806
P: 800-474-3794
O: 401-245-5176
M: 617-438-1408
EMAIL: MARK.T.WEINER@SHERWIN.COM

P&G CLEANING AND SANITATION PROGRAM
PROCTOR & GAMBLE
VENDOR CONTACT: CARLA EVANS
P: 513-983-9599
E: EQCINCINNATI.IM@PG.COM
WWW.PG.COM

PIVOTING CANOPY AT DRIVE-THRU SPEAKER & CLEARANCE BAR, DT/ ENTRANCE CANOPY & ORANGE BAND
UNI-STRUCTURES, INC.
VENDOR CONTACT: DANA MCDOUGAL
C: 678.974.1773
E: D.MCDOUGAL@UNISTRUCTURES.COM
WWW.UNISTRUCTURES.COM

POS (DD AND DD/BR)
RADIANT
VENDOR CONTACT: NANY COOPER
P: 770-299-6881
E: NANCY.COOPER@NCR.COM
RADIANTORDERS.HSR@NCR.COM

PRICE CONFIRMATION DISPLAY/SCANNERS
RADIANT
VENDOR CONTACT: NANY COOPER
P: 770-299-6881
E: NANCY.COOPER@NCR.COM
RADIANTORDERS.HSR@NCR.COM

RESTROOM FIXTURES AND ACCESSORIES
NEWTON DISTRIBUTORS
VENDOR CONTACT: PEDRO GRULLON
P: 877-837-7745
E: PEDRO@NEWTONDISTRIBUTING.COM
WWW.NEWTONDISTRIBUTING.COM

RESTROOM REMODELS
15 HAMMATT ST.
PO BOX 34
IPSWICH, MA 01938
PHONE: 617-500-2554
FAX: 617-845-0350
WWW.RESTROOMREMODELS.COM
SALES@RESTROOMREMODELS.COM

ROOFING:
DURO-LAST ROOFING
VENDOR CONTACT: JIM SCHRIBER
P: 800-248-0280 X 2257
E: JSCHRIBER@DURO-LAST.COM OR:
CORPORATEACCOUNTS@DURO-LAST.COM

SALES AREA, SERVICE/PREP. AREA FLOOR & WALL TILES
DAL TILE
VENDOR CONTACT: PAULA TOSTI
P: 978-835-7793
E: PAULA.TOSTI.@DALTILE.COM
WWW.DALTILEPRODUCTS.COM

CREATIVE MATERIALS
VENDOR CONTACT:
P: 800-207-2967 EXT. 3865 (DUNK)
F: 518-452-9153
E:
DUNKINTILE@CREATIVEMATERIALSCORP.COM

SECURITY PCI COMPLIANCE/ WIFI
COMCAST
DBI_COMCAST_ORDERING@COMCAST.NET
OR
ROSE VAZQUEZ
P: 508-314-7545
ROSE_VAZQUEZ@COMCAST.COM

SIGN MANUFACTURER
ALLEN INDUSTRIES
VENDOR CONTACT: KEITH WHITLEY
P: 919-410-1234
E:
KEITH.WHITLEY@ALLENINDUSTRIES.COM
WWW.ALLENINDUSTRIES.COM

DASCO
VENDOR CONTACT: SCOTT STANTON
P: 207-477-2956
E: SCOTT@DASCOSIGNS.COM
WWW.DASCO-SIGNS.COM

EVERBRITE
VENDOR CONTACT: ANA DOMINGUEZ
P: 414-529-7107
E: ADOMINGUEZ@EVERBRITE.COM
WWW.EVERBRITE.COM

HILTON DISPLAYS
VENDOR CONTACT: JIM PRENTICE
P: 865-347-2912
E: JIMPRENTICE@HILTONDISPLAYS.COM
WWW.HILTONDISPLAYS.COM

VIEWPOINT
VENDOR CONTACT: JEFF KWASS
P: (508)-393-8200
E: JEFF@VIEWPOINTSIGNS.COM
WWW.VIEWPOINTSIGNS.COM

POYANT SIGNS
VENDOR CONTACT: JASON FREDETTE
P: 508-207-1274
E: JFREDETTE@POYANTSIGNS.COM
WWW.POYANTSIGNS.COM

PERSONA SIGNS
VENDOR CONTACT: SUSAN KOELZER
P: 605-882-2244 X 390
E: SKOELZER@PERSONASIGNS.COM
WWW.PERSONASIGNS.COM

SUPERIOR SIGNS
VENDOR CONTACT: PATTI SKOGLUND
P: 562-256-3158
E: PATTIA@SUPERIORSIGNS.COM
WWW.SUPERIORSIGNS.COM

STORE GRAPHICS
DGS RETAIL
VENDOR CONTACT: KAREN MCCUE
E: KARENMCCUE@DGSRETAIL.COM
P: 508-337-2990
F: 508-337-5040
WWW.DGSRETAIL.COM

STORE SURVEILLANCE
SECURITY SOURCE/MARCH SYSTEMS
VENDOR CONTACT: SHAWNA REEVES
P: 800-323-7612 X 109
E: SREEVES@SECURITYSOURCE.COM/
SECURITYSOURCEORDERS
@SECURITYSOURCE.COM
WWW.SECURITYCOURCE.COM

SOLAR SHADER
PHIFER
P: 205-345-2120
E: INFO@PHIFER.COM
WWW.PHIFER.COM

ROLL-A-SHADE
VENDOR CONTACT: RIC BERG
P: 952-245-5077 X 113
E: RIC@ROLLASHADE.COM
WWW.RIC@ROLLASHADE.COM

TANKLESS HOT WATER HEATERS
RINNAI
RINNAI AMERICA CORPORATION
103 INTERNATIONAL DRIVE
PEACHTREE CITY, GA 30269
P: 866-383-0707

TECHNICAL SUPPORT:
DESK: 1-888-746-6247

NATIONAL SALES MANAGER - CORPORATE ACCOUNTS
WALLY RICHARDSON
DESK: 800-621-9419
CELL: 678-848-1240
EMAIL: WRICHARDSON@RINNAI.US

TANKLESS HOT WATER HEATERS
RINNAI
RINNAI AMERICA CORPORATION
103 INTERNATIONAL DRIVE
PEACHTREE CITY, GA 30269
P: 866-383-0707

TECHNICAL SUPPORT:
DESK: 1-888-746-6247

NATIONAL SALES MANAGER - CORPORATE ACCOUNTS
WALLY RICHARDSON
DESK: 800-621-9419
CELL: 678-848-1240
EMAIL: WRICHARDSON@RINNAI.US

THUNDER GROUP
ORDER CONTACT INFORMATION:
THUNDER GROUP, INC.
NDCP
EMAIL:
DUNKINSALES@THUNDERGROUP.COM
P: 626-935-1605
780 SOUTH NOGALES STREET
CITY OF INDUSTRY, CA 91748

WALK-IN BOX
NORLAKE
VENDOR CONTACT: DAVID VIOLA
P: 715-386-2323
E: DAVID@VIOLAGROUP.COM
WWW.NORLAKE.COM

KOLPAK
VENDOR CONTACT: PHIL LETVINCHUK
P: 508-320-3939
E: PHILL@HATCHJENNINGS.COM
WWW.KOLPAK.COM

THERMAL RITE
VENDOR CONTACT: BECKY MURPHY
P: 763-543-0136
E: BECKY.MURPHY@THERMALRITE.COM
WWW.THERMALRITE.COM

WALL COVERINGS:
APA GRAPHICS
VENDOR CONTACT: MO KIM
P: (404) 355-1355 X 206
F: (404) 355-1359
E:
DUNKINORDERS@APACOLORGRAPHICS.COM
WWW.APACOLORGRAPHICS.COM

WATER QUALITY REQUIREMENTS:
WATER BOOSTER SYSTEM
MCCANN'S ENGINEERING
VENDOR CONTACT: ELEANOR HINSON
P: 818-637-7219
E: ELEANOR.HINSON@MANITOWOC.COM
WWW.MCCANNSENG.COM

WATER QUALITY:

WATER FILTRATION SYSTEM
3M FILTRATION

ORDERS & WATER TEST KITS
AWS DISTRIBUTING, INC.
JENNIFER BARAN
PHONE: 800-333-2866 (CUNO)
FAX: 630-836-1793
3MFILTERORDERS@SBCGLOBAL.NET

3M SALES NATIONAL ACCOUNT REP:
DAVID RADLIFF
SENIOR ACCOUNT EXECUTIVE
PHONE: 518-281-7754
DPRADLIFF@MMM.COM

3M FIELD OPERATIONS
FRED ABBOTT
PHONE: 508 272 6983
FHABBOTT@MMM.COM
WWW.SOLUTIONS.3M.COM/WPS/PORTAL/
3M/EN_US/3M-PURIFICATION-INC/3MPI-US/

WATER FILTRATION SYSTEM
PENTAIR (EVERPURE)

ORDERS & WATER TEST KITS
1800-842-6193
DUNKINH2OKIT@PENTAIR.COM

JOHN HINER
STRATEGIC ACCOUNT MANAGER
PENTAIR FILTRATION SOLUTIONS
PENTAIR WATER QUALITY SYSTEMS
P: 201-417-5564
E: JOHN.HINER@PENTAIR.COM

WALK-IN BOX SCHEDULE

WALK IN BOX	EXTERIOR
CEILING HT. WHERE BOX WILL BE LOCATED (IF INT.)	N/A
DOES BOX NEED TO BE PAINTED? (IF EXT.)	N/A
IS MASONRY SURROUNDING THE BOX (IF EXT.)	N/A
OVERALL DIMENSIONS OF THE BOX	8'-0" x 7'-0" x 8'-7"
*FREEZER DIMENSIONS	SEE PLAN
*COOLER DIMENSIONS	SEE PLAN
*ANTEROOM DIMENSIONS	8"-0 x 7'-0" x 8'-7"
REFRIGERATION SYSTEM	PRE-ASSEMBLED REMOTE RFRIGERATION
REFRIGERATION LOCATION (IF REMOTE)	BUILDING ROOF (1 STORY)
REFRIGERATION LINESET NEEDED (W/ REMOTE UNITS ONLY)	0-50 FT.
ELECTRICAL PHASE	SINGLE PHASE (120/208)/3-PHASE (227/480)
OPTIONAL ACCESSORIES:	
INTERIOR RAMP AT INSIDE OF DOOR AT COOLER	YES
HURRICANE TIE DOWN	NO
SEISMIC TIE DOWN	NO
DADE COUNTY SPECS	N/A
MASONRY TIES ON EXTERIOR OF BOX TO ALLOW BRICK AROUND EXT. BOX	N/A

PRE-ASSEMBLED REMOTE REFRIGERATION
HAS THE COMPRESSOR UNIT REMOTELY LOCATED AND THE EVAPORATOR IS MOUNTED INSIDE THE WALK IN. THE SYSTEM IS PRE-WIRED AND REQUIRES A DRAIN LINE AND FLOOR DRAIN. THE AREA WHERE THE BOX WILL BE LOCATED MUST HAVE A MINIMUM HEIGHT OF 8'-9" PRE-CHARGED LINES UP TO 50' LENGTHS, AND A QUICK DISCONNECT ARE INCLUDED. NO MAXIMUM COMPARTMENT SIZE. START UP BY REFRIG. TECHNOLOGY STANDARD HEIGHT OF WALK IN BOX USING THIS REFRIGERATION IS 8'-7".

INSTALLATION NOTES

1. EQUIPMENT SUPPLIER TO PLACE ALL NEW EQUIPMENT
2. GENERAL CONTRACTOR TO PLACE ALL EXISTING EQUIPMENT
3. GENERAL CONTRACTOR TO MAKE ALL MECHANICAL, PLUMBING, AND ELECTRICAL CONNECTIONS FOR ALL EQUIPMENT

NOTES

REFER TO DUNKIN' BRANDS MULTIBRAND EQUIPMENT SPECIFICATIONS ON DUNKIN' BRANDS WEB SITE, http://extranet.dunkinbrands.com, FOR COMPLETE EQUIPMENT AND UTILITY INFORMATION. DUNKIN' BRANDS WEB SITE ALWAYS TAKES PRECEDENCE OVER DRAWINGS IN INSTANCE OF CONFLICT.

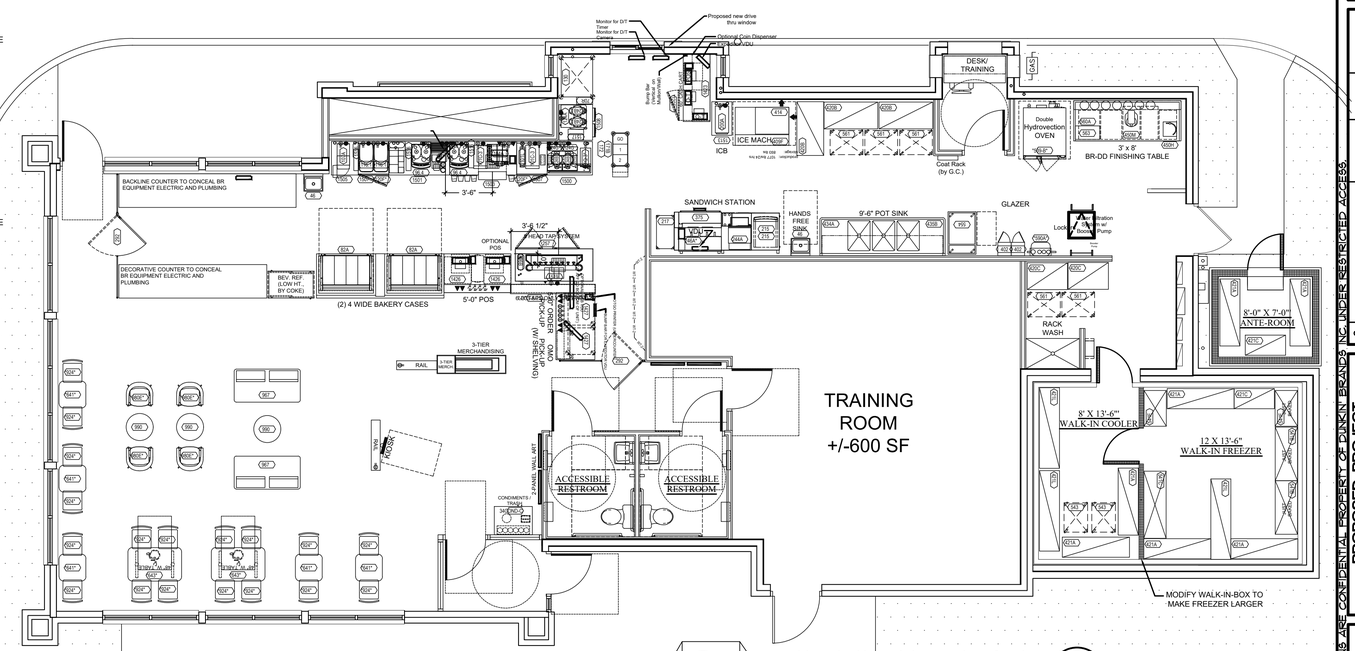

1 K1.0 EQUIPMENT PLAN
SCALE: 3/16" = 1'-0"

PROJECT NORTH

ALBERT TAUS & ASSOCIATES, ARCHITECTS
ALBERT TAUS, A.I.A.
ARCHITECTURE PLANNING INTERIOR DESIGN ENGINEERING
ARCHITECT
PHONE: (215) 908-2519 FAX: (215) 908-7308
atausarchitects.com

THESE PLANS ARE THE PROPERTY OF ALBERT TAUS & ASSOCIATES, ARCHITECTS, AND ARE NOT TO BE USED WITHOUT THE EXPRESSED WRITTEN PERMISSION OR CONSENT OF ALBERT A. TAUS, R.A., A.I.A.

STATE OF MISSOURI
ALBERT A. TAUS
NUMBER
A-2015032715
ARCHITECT
MO# A-2015032715
SIGNATURE

DOCUMENTS PREPARED FOR
DDJ2 DOUGLAS, LLC
C/o: MR HOSSAM SHAHIN
109 E. HALE LAKE RD
WARRENSBURG, MO 64093

	DATE	04/29/21
	SCALE	AS NOTED
	DRAWN	GR
	CKD	DJK
	APPD	AAT

NO	DESCRIPTION	DATE
6		
5		
4		
3		
2		
1		
-		

REVISIONS

ATA200602.10

THESE PLANS ARE CONFIDENTIAL PROPERTY OF DUNKIN' BRANDS, INC. UNDER RESTRICTED ACCESS.

PROPOSED PROJECT
DUNKIN'
WITH DRIVE THRU
1100 NE DOUGLAS STREET
LEE'S SUMMIT, MO. 64086
NEXT GEN (COOL PALAETTE)
EQUIPMENT PLAN

DUNKIN' BRANDS [eat drink smile]

K1.0

EQUIPMENT SCHEDULE

EQUIPMENT								PLUMBING							ELECTRICAL									
								WATER		WASTE							LOAD							
ITEM #		QTY	DESCRIPTION	MANUFACTURER	MODEL #	N.S.F. E.T.L.	U.L. E.T.L.	H.W.	C.W.	F.W.	DR.	INO.	REMARKS	VOLTS	PHASE	AMPS	CIRCUIT SIZE	WIRE# (#GND)	SUPPLIED W/ CORD & PLUG	RECEPT. SPEC	A.F.F.	REMARKS
CNTR			CUSTOM STAINLESS STEEL COUTERS SEE PLAN FOR DIMS	MILLWORK SUPPLIER																		
COND			CUSTOM CONDIMENT STATION	MILLWORK SUPPLIER																		
46.1			HAND SINK WITH KNEE PADDLE, NO SPLASH GUARDS	JOHN BOOS	PBHS-W-KVMB-1PBHS-W-KV			1/2	1/2													
70R			TISSURE BAG AND BOX HOLDER FOR DRIVE THRU RACK	UNIVERSAL	DD-DSPN71435																	
82A			BAKERY TROLLEY	MIDDLEBY FABRICATION	DD4T5WTRLY																	
96.4			ESPRESSO MACHINE	SCHAERER	COFFEE ART TOUCH #10SO-PB-DD40071									208-230V	1	30	30	3	30	NEMAL6-30R		
101O-3			DAIRY DISPENSER	SILVER KING	SKEDC12-V3									120V	1	1.8	20	3		NEMA5-15P		
101L			PORTION CONTROLLED GRANULAR & POWDER DISPENSER	SURE SHOT	AC2-GP																	
101Q*	101Q-1		~~MULTI HOPPER COFFEE GRINDER~~	~~BUNN-O-MATIC~~	~~35600.0011~~																	
	101Q-3		MULTI HOPPER COFFEE GRINDER	BUNN-O-MATIC	35600.0011									120V	1	11	15	2	Y	NEMA 5-15		BUNN PROVIDED CORD & PLUG INSTALLED BY GENERAL CONTRACTOR.
104A			PUMP STATION	WIREFAB	WF35522																	
107A			DUNKACHINO MACHINE	BUNN-O-MATIC	29250.0003	18	197			1/2"				208-120V	1	17	20	3		NEMAL14-20		BUNN PROVIDED CORD & PLUG INSTALLED BY GENERAL CONTRACTOR.
116			MAGNABLEND BLENDER/ISLAND OASIS	TAYLOR	592512-WDD					X"			ISLAND OASIS (IO) TO BE FILTERED WATER	110V	1	5.3						
120F	120F-1		UNDERCOUNTER REFRIGERATOR 27" W/ CASTERS, RIGHT HINGE	DELFIELD	406-CA-SPL-RHH	7	SA 4769							115	1	7	15	3	Y	NEMA 5-15		RIGHT HAND HINGE
	120F-2		UNDERCOUNTER REFRIGERATOR 27" W/ CASTERS, LEFT HINGE	DELFIELD	406-CA-SPL-LHH	7	SA 4769							115	1	7	15	3	Y	NEMA 5-15		LEFT HAND HINGE
	120F-3		UNDERCOUNTER REFRIGERATOR 27" W/ CASTERS, LEFT HINGE	VICTORY	UR-27-SST									115	1	5.6	15	3	Y	NEMA 5-15		DOOR CAN BE RE-HINGED IN FIELD
124A			TWIN SH BREWER	BUNN-O-MATIC	51200.0101					X"				120/ 208V	1	38.5	50	4	N	NEMA L14-50		
124B			1.5 GAL SH SERVER	BUNN-O-MATIC	27850.0200																	
124O			TWIN HEAT STAND	BUNN-O-MATIC	27875.0201					X"				120/ 208V	1	16.8	20	4	N	NEMA L14-20		
130			DONUT BAKERY RACK AT DRIVE THRU 36" W X 29" D	STORAGE PRODUCTS GROUP	DD-36SLC-29-RK-C																	
171B			DRIVE THRU READY TO GO MAT	TRYAD	2.1																	
172			DRIVE THRU STAGING CART	METRO	DD-DT30																	
200A			ICE COFFEE BREWER - #C2 -OBC W/ ICDD	BUNN-O-MATIC CAMBRO	45100.01 ICS150L		"			X/2"			20-80 PSI MACHINE SUPPLIED WITH X/ O.D. MALE FLAREFITTING	120 / 208V	1	19.5	30	4	Y	NEMA L14-30		6' CORD TO BE PROVIDED & INSTALLED BY G.C.
215			TORNADO OVEN W/STONE, PEEL AND (2) TRAYS EXTENDED WARRANTY INCLUDED	TURBOCHEF	NGC-1180-1-2019									208V	1	30	30		Y	NEMA 6-30		
217			SANDWICH STATION TABLE 18"W X 30"D	STORAGE PRODUCTS GROUP	DD-18SLC-30																	
244A			DUAL LANE TOASTER	HATCO	ITQ-1750-2C-DD									208V	1	23.8	30	3	30	NEMA 6-30P		
246A -1			12 BAY HOLDING UNIT 33"W X 16"D X 16.5"H	CARTER HOFFMAN	MZ343S-DD									120V	1	15		3	N	NEMA5-15P		
257			8 TAP SYSTEM WITH GENERATOR	MICROMATIC	MDD-68G-E-DD					X/2"		1"		115V	1	11.1	20	2	Y	NEMA 5-15		3 SECTION CAKE & QUART DISPLAY
292			36" SWING GATE	EQUIPMENT SUPPLIER	CUSTOM MILLWORK																	
375			SANDWICH STATION	DUKE	APOD 94" STATION HYBRID									115V		10.4				NEMA 5-15P		
402			EMPLOYEE LOCKER	STORAGE PRODUCTS GROUP	EL6/EB																	
409E			ICE BIN	SCOTSMAN	B948S																	
414			ICE MACHINE	SCOTSMAN	C1030SA-32B					3/4"		3/4"		208-230V	1	10	15	3	Y			
420B			SHELF 24" X 48"	METRO	2448BR																	
420C			SHELF 24" X 36"	METRO	2436BR																	
421A			SHELF 18" X 60"	METRO	1860BR																	
421C			SHELF 18" X 36"	METRO	1836BR																	
421L			SHELF UNITS 18" X 72"	METRO	1872BR																	
424A			3 COMPARTMENT SINK	MIDDLEBY FABRICATION	VJEYARAMAN			1/2"	1/2"													
434A			3 COMPARTMENT 112" W X 34D	UNIVERSAL	WST1435E																	
435A			90° SINK TRAX SHELVING 3 COMPARTMENT SINK	STORAGE PRODUCTS GROUP	WST1435E																	
435B			SINK TRAX WORKSTATION 108"	STORAGE PRODUCT GROUP	WST1415E																	
450M			STAND MIXER	KITCHENAID	KSM7990																	
460			WALK-IN COOLER/FREEZER	NORLAKE	PER WALK-IN ORDER FORM								PROVIDE DRAIN FOR EVAPORATOR UNIT.									
539-B			HYDROVECTION OVEN (GAS)	BLODGETT	HV-100G DOUBLE																	
541B			DUNNAGE RACK 20"D X 48"W	LOCKWOOD	D2040-8																	
541C			DUNNAGE RACK 20"D X 60"W	LOCKWOOD	D2060-8																	
541E			DUNNAGE RACK 20"D X 32"W	LOCKWOOD	D2032-8																	
543			BAKERY PAN RACK 21"X26"	KELMAX	APRU1618-4-AT-BK-MOD																	
554			GLAZERS	BELSHAW	HG18EZ-DD-34																	
561			FINISHED PRODUCT RACK	STORAGE PRODUCTS GROUP	APRUE1326-5/AT/TG/BK																	
563			POWER BASE	EDHARD	P-4010, P-4012, P-4015, P-4016, P-4017, P-4020									120V								
560A			TABLE 96" X 36"	STORAGE PRODUCTS GROUP	DD-6SLCB36-OSZES																	
590A			WATER FILTRATION SYSTEM	EVERPURE	EV9327-73																	
886B			SPOON MIXER CUP HOLDER (TAP AND BEV INITIATION STATION)	WIREFAB	WF35897																	
1423			XXXXX	XXXXX	XXXXXX																	
1426			MOBILE INITIATIOR ICE BIN RIGHT	METRO	DD2424POS POS CART																	
1427			ON THE GO GART	METRO	DD2424OTG																	
1500			HVB COFFEE CART (39.5" X 30") - REVERSIBLE	FRANKE	18017419																	
1501			54" DUMP SINK TABLE/ESPRESSO RIGHT (54-1/2" X 30")	FRANKE	18017755																	
1503			MOBILE INITIATOR ICE BIN RIGHT	FRANKE	18017813																	
1504			ICEBIN/ INITIATOR - LEFT	FRANKE	18017755																	
1505			HWB CABINET (24" X 30")	FRANKE	18017716																	
1507			WORKTOP RISER FOR UCR	FRANKE	18018506																	
1508			TRASH/COMPOST (32" X 30")	FRANKE	18018667																	
1513			MOBILE WORK TABLE	FRANKE	18018324																	
1516			LID HOLDER (1 WIDE 4 TALL)	FRANKE	18018406																	
1517			CUP LID HOLDER 2X3 F/McCAFE LIDS	FRANKE	18004125																	
1519			LID HOLDER & TAP SYSTEM	FRANKE	18017465																	

ALBERT TAUS & ASSOCIATES, ARCHITECTS
ALBERT TAUS, A.I.A.
ARCHITECTURE PLANNING INTERIOR DESIGN ENGINEERING
PHONE: (816) 908-2519 FAX: (816) 908-7308
atausarchitects.com

THESE PLANS ARE THE PROPERTY OF ALBERT TAUS & ASSOCIATES, ARCHITECTS, AND ARE NOT TO BE USED WITHOUT THE EXPRESSED WRITTEN PERMISSION OR CONSENT OF ALBERT A. TAUS, R.A., A.I.A.

STATE OF MISSOURI
ALBERT A. TAUS
NUMBER A-2015032715
ARCHITECT

MO# A-2015032715

SIGNATURE

DOCUMENTS PREPARED FOR
DDJ2DOUGLAS, LLC
C/O: MR HOSSAM SHAHIN
109 E. HALE LAKE RD
WARRENSBURG, MO 64093

ATA200602.10

NO	DESCRIPTION	DATE
6		
5		
4		
3		
2		
1		
–		

REVISIONS

DATE	04/29/21
SCALE	AS NOTED
DRAWN	GR
CKD	DJK
APPD	AAT

THESE PLANS ARE CONFIDENTIAL PROPERTY OF DUNKIN' BRANDS INC. UNDER RESTRICTED ACCESS.

PROPOSED PROJECT
DUNKIN'
WITH DRIVE THRU
1100 NE DOUGLAS STREET
LEE'S SUMMIT MO. 64086

NEXT GEN (COOL PALAETTE)

EQUIPMENT SCHEDULE

DUNKIN' BRANDS
[ecr@drinkshirt]

K1.1

(1) THE HVAC CONTRACTOR SHALL BE RESPONSIBLE TO ENSURE THAT ALL HVAC WORK IS PROVIDED AND INSTALLED IN STRICT COMPLIANCE WITH STATE CODE.

(2) ALL WORK AND MATERIALS SHALL BE PERFORMED AND INSTALLED IN ACCORDANCE WITH ALL NATIONAL, STATE, AND LOCAL CODES AND REGULATIONS.

(3) REFER TO SPECIFICATIONS FORM PART FOR THE FULL PROJECT SCOPE.

(4) THE EXACT MOUNTING HEIGHTS AND LOCATIONS OF ALL HVAC EQUIPMENT SHALL BE FIELD VERIFIED AND COORDINATED WITH ALL OTHER NEW AND EXISTING MECHANICAL, ELECTRICAL, ARCHITECTURAL AND STRUCTURAL SYSTEMS.

(5) THE FINISH AND COLOR OF THE AIR DEVICES, AND ALL OTHER EXPOSED HVAC EQUIPMENT SHALL BE COORDINATED WITH THE OWNER.

(6) VERIFY ALL EQUIPMENT VOLTAGES WITH THE ELECTRICAL CONTRACTOR PRIOR TO ORDERING EQUIPMENT.

(7) PROVIDE DISCONNECT SWITCHES FOR ALL HVAC EQUIPMENT INCLUDING WEATHERPROOF DISCONNECT AS REQUIRED.

(8) PROVIDE PHASE LOSS PROTECTION FOR ALL POLY-PHASE MOTOR DEVICES.

(9) THE FINAL LOCATION OF AIR DEVICES MUST BE COORDINATED WITH THE REFLECTED CEILING PLAN AND ALL OTHER NEW AND EXISTING MECHANICAL, ELECTRICAL, SPRINKLER, ARCHITECTURAL, AND STRUCTURAL SYSTEMS.

(10) DUCTWORK SHALL BE CONSTRUCTED OF GALVANIZED SHEET STEEL IN STRICT COMPLIANCE WITH THE LATEST EDITION OF THE ASHRAE, NFPA, AND SMACNA GUIDE RECOMMENDATIONS. ALL DUCTS TO HAVE PITTSBURGH TYPE LOCK FOR LONGITUDINAL SEAMS AND DRIVE SLIP/ "S" SLIP FOR TRANSVERSE JOINTS. "DUCT-MATE" JOINT SYSTEM IS ACCEPTABLE IN LIEU OF PRIOR SEAM SYSTEMS. SIZES AS SHOWN INDICATE INSIDE CLEAR DIMENSIONS OF THE AIR PASSAGE. DUCTWORK SHALL BE FULLY INSULATED AS PER SPECIFICATIONS.

(11) DUCT SIZES MUST BE VERIFIED FOR CLEARANCES AT THE JOB SITE PRIOR TO FABRICATION. DIMENSIONS MAY BE CHANGED TO ACCOMMODATE CONSTRUCTION AS LONG AS EFFECTIVE CROSS-SECTIONAL AREA IS MAINTAINED. DUCT TRANSITIONS SHALL BE CONSTRUCTED WITH A SLOPE OF 1" TO 4". ALL DEVIATIONS FROM ORIGINAL CONTRACT DRAWINGS SHALL BE REVIEWED BY ENGINEER DURING THE SHOP DRAWING PROCESS.

(12) PROVIDE ELBOWS OR TEES WITH TURNING VANES FOR ALL CHANGES OF DUCT DIRECTION. PROVIDE SPLITTER DAMPERS WITH LOCKING QUADRANTS IN ALL TEES.

(13) PROVIDE MANUAL BALANCING DAMPERS AS REQUIRED TO PROPERLY BALANCE EACH INDIVIDUAL AIR DISTRIBUTION SYSTEM. IF THE LOCATION OF THE BALANCING DAMPER IS NOT DEFINED ON THE DRAWINGS, THE FOLLOWING MINIMUM STANDARDS SHALL GOVERN. ALL SUPPLY, RETURN, AND EXHAUST MAIN BRANCHES FROM TRUNKS, EACH SPLIT, AND ALL SUB-BRANCHES FROM MAINS SHALL INCORPORATE BALANCING DAMPERS.

(14) PROVIDE FLEXIBLE CONNECTIONS AT ALL DUCT CONNECTIONS TO VIBRATING EQUIPMENT. THESE CONNECTIONS SHALL BE INSTALLED IN CLOSE PROXIMITY TO SUCH EQUIPMENT.

(15) FLEXIBLE DUCT DIAMETER SHALL MATCH THE NECK SIZE OF THE DIFFUSER TO WHICH IT CONNECTS, UNLESS NOTED OTHERWISE. TOTAL LENGTH OF FLEXIBLE DUCT RUN SHALL NOT EXCEED 5'-0". EXTEND SHEETMETAL DUCT WITHIN 5'-0" OF THE AIR DEVICE FOR COMPLIANCE. FLEXIBLE DUCTWORK IS NOT PERMITTED FOR USE IN ANY PARTS OF THE RETURN OR EXHAUST AIR SYSTEMS. FLEXIBLE DUCTWORK SHALL NOT PASS THROUGH FIRE RATED CONSTRUCTION.

(16) FLEXIBLE DUCTWORK MUST BE INSTALLED WITH SUPERIOR WORKMANSHIP MAINTAINING FULL CROSS SECTIONAL AREA THROUGHOUT. SUPPORT FROM STRUCTURE AT 24" INTERVALS TO ENSURE FULL CROSS SECTIONAL AREA FOR MAXIMUM AIR FLOW. USE FLEXIBLE DUCT ONLY AT LINEAR DIFFUSERS.

(17) PROVIDE FIRE DAMPERS WITH RATED ACCESS DOORS AT ALL DUCT PENETRATIONS THROUGH FIRE RATED WALLS, SMOKE AND FIRE STOPPING, SHAFTS, FLOORS, RATED CEILINGS AND PARTITIONS AS REQUIRED TO MAINTAIN ARCHITECTURAL FIRE RATINGS. REFER TO THE ARCHITECTURAL PLANS AND SPECIFICATIONS FOR LOCATIONS AND FIRE RATING REQUIREMENTS.

(18) ALL ACCESS DOORS REQUIRED IN GENERAL CONSTRUCTION ARE TO BE PROVIDED AND INSTALLED BY THE GENERAL CONTRACTOR. ACCESS DOORS ARE INTENTIONALLY NOT SHOWN ON DRAWINGS PENDING FINAL SHOP DRAWING LAYOUT REQUIREMENTS SINCE ONE ACCESS DOOR MAY SERVICE MULTIPLE TRADES. IT IS THE RESPONSIBILITY OF THIS CONTRACTOR TO IDENTIFY SIZE, TYPE AND LOCATION OF SUCH DOORS FOR PROPER ACCESS TO ALL CONCEALED EQUIPMENT REQUIRED ACCESS.

THIS CONTRACTOR SHALL IDENTIFY THESE REQUIREMENTS ON A COORDINATED SHOP DRAWING PRIOR TO SYSTEM FABRICATION AND INSTALLATION. THE GENERAL CONTRACTOR SHALL BE RESPONSIBLE TO COORDINATE THE QUANTITY, SIZE AND LOCATION OF SUM TOTAL OF ALL ACCESS DOORS WHICH ADEQUATELY SERVICE ALL TRADES.

(19) ALL WALL AND ROOF OPENINGS 12" X 12" OR LARGER ARE TO BE EQUIPPED WITH BURGLAR BARS USING 5/8" DIAMETER RODS RUNNING 6" ON CENTER IN BOTH DIRECTIONS, AND WELDED AT ALL INTERSECTING POINTS. SECURE THE PERIMETER FRAME ASSEMBLY TO THE WALL OR ROOF FRAMED ASSEMBLY.

(20) IT IS THE RESPONSIBILITY OF THE HVAC CONTRACTOR TO PREPARE A COMPLETE SUBMISSION DEPICTING A TOTALLY ENGINEERED COOKING EQUIPMENT VENTILATION SYSTEM BASED UPON THE FINAL APPROVED AND PURCHASED EQUIPMENT AND ACTUAL FIELD CONDITION STATIC PRESSURES. THIS SHALL INCLUDE BUT NOT BE LIMITED TO HOODS, DUCTWORK, GREASE FILTERS AND EXHAUST/SUPPLY FANS FUNCTIONING COLLECTIVELY AS A COMPLETE SYSTEM DELIVERING THE SPECIFIED DESIGN CRITERIA.

(21) ALL CEILING MOUNTED EQUIPMENT MUST BE SUPPORTED DIRECTLY FROM BUILDING STRUCTURE WITH COMBINATION SPRING AND NEOPRENE- IN-SHEAR HANGERS AND ROD. PROVIDE SUPPLEMENTARY STEEL AS REQUIRED TO ADEQUATELY SUPPORT THE LOAD.

(22) FIELD ADJUST THE DIRECTION OF SUPPLY AIR, SO THAT DIFFUSERS DO NOT BLOW INTO SOFFITS, CURTAIN WALLS, REFRIGERATED FIXTURES OR EXHAUST HOODS.

(23) ALL EXTERIOR HVAC EQUIPMENT SHALL BE INSTALLED SUFFICIENTLY AWAY FROM EDGE OF BUILDING. IN ADDITION, ADEQUATE CLEARANCES SHALL BE PROVIDED FOR CLEANING AND MAINTENANCE REQUIREMENTS. THE FINAL LOCATION OF ALL EXTERIOR UNITS MUST ALSO COMPLY WITH ALL OSHA SAFETY REQUIREMENTS.

(24) EXHAUST FLUES THAT PENETRATE THE EXTERIOR WALL OF THE BUILDING SHALL TERMINATE WITH A WEATHERPROOF VENT CAP AND BE SEAL WEATHER TIGHT.

(25) GUARANTEE ALL HVAC WORK AND EQUIPMENT FOR A PERIOD OF ONE YEAR FROM DATE OF STORE OPENING. DURING THE ONE YEAR PERIOD, SERVICE SHALL BE PROVIDED TWENTY-FOUR HOURS PER DAY SEVEN DAYS PER WEEK AND SHALL INCLUDE ALL SERVICE CALLS, PARTS, LABOR AND MAINTENANCE AT NO ADDITIONAL COST TO THE OWNER OR TENANT. ALL FILTERS SHALL BE CHANGED ONCE PER MONTH. IN ADDITION, ALL COMPRESSORS SHALL CARRY A FIVE YEAR WARRANTY FROM THE MANUFACTURER.

(26) ALL HVAC SYSTEMS SHALL RUN ABOVE THE EXISTING HUNG CEILING OF THE RATED FLOOR/CEILING ASSEMBLY. PROVIDE FIRE STOPPING, FIRE DAMPERS AND RATED AIR DEVICES AT ALL PENETRATIONS TO MAINTAIN THE REQUIRED RATING OF THE EXISTING FLOOR/CEILING ASSEMBLY.

(27) DISPOSE OF ALL MATERIALS AS DIRECTED BY AN BURGER MAKER REPRESENTATIVE.

(28) DO NOT SCALE FROM THESE DRAWINGS.

(29) SYSTEM BALANCE SHALL BE PERFORMED IN STRICT COMPLIANCE WITH ALL APPLICABLE CODES, REGULATIONS, PLANS AND WRITTEN SPECIFICATION.

(30) HVAC CONTRACTOR MUST VISIT THE SITE TO CAREFULLY EXAMINE AND FAMILIARIZE THEMSELVES WITH THE EXISTING CONDITIONS PRIOR TO BIDDING. SUBMISSION OF A PROPOSAL WILL BE CONSIDERED AS EVIDENCE THAT SUCH AN EXAMINATION HAS BEEN PERFORMED. LATER CLAIMS FOR EXTRA LABOR OR MATERIALS REQUIRED DUE TO DIFFICULTIES ENCOUNTERED NOT BE RECOGNIZED.

(31) ALL ROOFTOP EQUIPMENT SHALL BE PAINTED. THE COLOR MUST BE COORDINATED WITH THE ARCHITECT PRIOR TO ORDERING EQUIPMENT.

(32) PROVIDE 120V SMOKE DETECTORS WITH AUXILIARY CONTACTS. UPON ACTIVATION, THE SMOKE DETECTORS SHALL SHUT DOWN THE AIR DISTRIBUTION SYSTEMS AND ACTIVATE A VISIBLE AND AUDIBLE SUPERVISORY SIGNAL AT A CONSTANTLY ATTENDED LOCATION VIA SPRINKLER/FIRE ALARM PANEL. SMOKE DETECTORS MUST BE COMPATIBLE WITH THE INSTALLED FIRE ALARM SYSTEM.

2 GENERAL NOTES

AIR BALANCE SCHEDULE

TAG	SUPPLY AIR	OUTSIDE AIR	RETURN AIR	EXHAUST AIR	BLDG. PRESSURE	% OUTSIDE AIR
RTU-1	3000 CFM	600 CFM	2400 CFM	---	+ 600 CFM	20
RTU-2	2000 CFM	400 CFM	1600 CFM	---	+ 400 CFM	20
RTU-4	4000 CFM	800 CFM	3400 CFM	---	+ 800 CFM	20
EF-1	---	---	---	450 CFM	- 450 CFM	---
EF-2	---	---	---	525 CFM	- 525 CFM	---
EF-3	---	---	---	300 CFM	- 300 CFM	---

TOTAL	10000 CFM	1800 CFM	7400 CFM	1275 CFM	- 525 CFM	

3 VENTILATION SCHEDULES

SYMBOL	DESCRIPTION
CD	4-WAY CEILING DIFFUSER
CD	3-WAY CEILING DIFFUSER
CD	2-WAY CEILING DIFFUSER
CR , EG	RETURN OR EXHAUST CEILING GRILLE
RG OR EG	RETURN OR EXHAUST GRILLE
SR	SUPPLY REGISTER
	SUPPLY DUCT UP OR DOWN
	RETURN OR EXHAUST DUCT UP OR DOWN
	ROUND DUCT
	FLEXIBLE DUCT
FC	FLEXIBLE CONNECTOR
VD	MANUAL VOLUME DAMPER
F FD	FIRE DAMPER WITH ACCESS DOOR
M MD	MOTORIZED DAMPER
L	AIR FLOW THRU LOUVERED DOOR
U	AIR FLOW THRU DOOR UNDERCUT
T	THERMOSTAT
S	DRY BULB SENSOR
H	HUMIDITY SENSOR
SD	SMOKE DETECTOR
F/C	FAN CONTROL SWITCH
12"NK	NECK SIZES IN DUCT SPLIT
	DUCTWORK W/INTERNAL LINING
	FLEXIBLE CONNECTION

	FLEXIBLE CONNECTION
	DUCT MOUNTED COIL
	ELBOW WITH DOUBLE THICKNESS TURNING VANES
	45° BOOT TAKE-OFF W/ VOLUME DAMPER
	BELLMOUTH TAKE-OFF W/ VOLUME DAMPER

NOTE:
NOT ALL SYMBOLS LISTED ABOVE ARE NECESSARILY USED ON THIS PROJECT.

4 SYMBOLS LEGEND

CODE AND CRITERIA CHART

1	SPACE	2,917 SQ.FT
2	OCCUPANCY TYPE	RESTAURANT
3	GOVERNING CODES AND REFERENCES	INTERNATIONAL MECHANICAL CODE
4	SUMMER OUTDOOR DESIGN CONDITIONS (PER ASHRAE FUNDAMENTALS)	DESIGN CITY: LEE'S SUMMIT, MO
		DRY BULB: 93.0°F
		WET BULB: 74.5°F
5	SUMMER INDOOR DESIGN CONDITIONS	DRY BULB: 72°F
		RELATIVE HUMIDITY: 50%
6	WINTER OUTDOOR DESIGN CONDITIONS (PER ASHRAE FUNDAMENTALS)	DESIGN CITY: LEE'S SUMMIT, MO
		DRY BULB: 9.2°F
7	WINTER INDOOR DESIGN CONDITIONS	DRY BULB: 70°F
		RH: NO MINIMUM RH CONTROL PROVIDED
8	FILTRATION	30% PLEATED PRE-FILTER MEDIA

1 PROJECT DESIGN CRITERIA

SYMBOL	DESCRIPTION
AFF	ABOVE FINISHED FLOOR
AFG	ABOVE FINISHED GRADE
BLDG	BUILDING
BOD	BOTTOM OF DUCT
BR	BOTTOM REGISTER
BS	BIRD SCREEN
BTU	BRITISH THERMAL UNIT
CD	CEILING DIFFUSER
CFM	CUBIC FEET PER MINUTE
CLG	CEILING
CO	COMPANY
COMPR	COMPRESSOR
COND	CONDENSATE
CONTR	CONTRACTOR
CR	CEILING REGISTER
CU	CONDENSING UNIT
DB	DRY BULB
DN	DOWN
DWG(S)	DRAWING(S)
EA	EXHAUST AIR
EAT	ENTERING AIR TEMPERATURE
EC	ELECTRICAL CONTRACTOR
EDB	ENTERING DRY BULB

SYMBOL	DESCRIPTION
EER	ENERGY EFFICIENCY RATIO
EF	EXHAUST FAN
EG	EXHAUST GRILLE
EH	ELECTRIC HEATER
EQUIP	EQUIPMENT
ESP	EXTERNAL STATIC PRESSURE
EWB	ENTERING WET BULB
FC	FLEXIBLE CONNECTION
FD	FIRE DAMPER WITH ACCESS DOOR
FLA	FULL LOAD AMPS
FPM	FEET PER MINUTE
GC	GENERAL CONTRACTOR
GPM	GALLONS PER MINUTE
H	HOOD
HC	HVAC CONTRACTOR
HP	HORSEPOWER
HV	HEATING & VENTILATING
HVAC	HEATING, VENTILATING, AND AIR CONDITIONING
LAT	LEAVING AIR TEMPERATURE
MBH	THOUSAND BTU PER HOUR
MC	MECHANICAL CONTRACTOR
MCA	MINIMUM CIRCUIT AMPS
MD, M	MOTORIZED DAMPER

SYMBOL	DESCRIPTION
MOD	MOTOR OPERATED DAMPER
MU	MAKE UP AIR UNIT
OA	OUTSIDE AIR
OPNG	OPENING
PC	PLUMBING CONTRACTOR
RA	RETURN AIR
RC	REFRIGERATION CONTRACTOR
RG	RETURN GRILLE
RH	RELATIVE HUMIDITY
RLA	RUNNING LOAD AMPS
RPM	REVOLUTIONS PER MINUTE
RR	RETURN REGISTER
SA	SUPPLY AIR
SD	DUCT SMOKE DETECTOR
SDD	SMOKE DAMPER WITH ACCESS DOOR
SE	SMOKE EXHAUST
SF	SUPPLY FAN
SQ. FT.	SQUARE FEET
SR	SUPPLY REGISTER
TG	TRANSFER GRILLE
TYP	TYPICAL
VD	VOLUME DAMPER
WB	WET BULB

NOTE:
NOT ALL ABBREVIATIONS LISTED ABOVE ARE NECESSARILY USED ON THIS PROJECT.

5 MECHANICAL ABBREVIATIONS

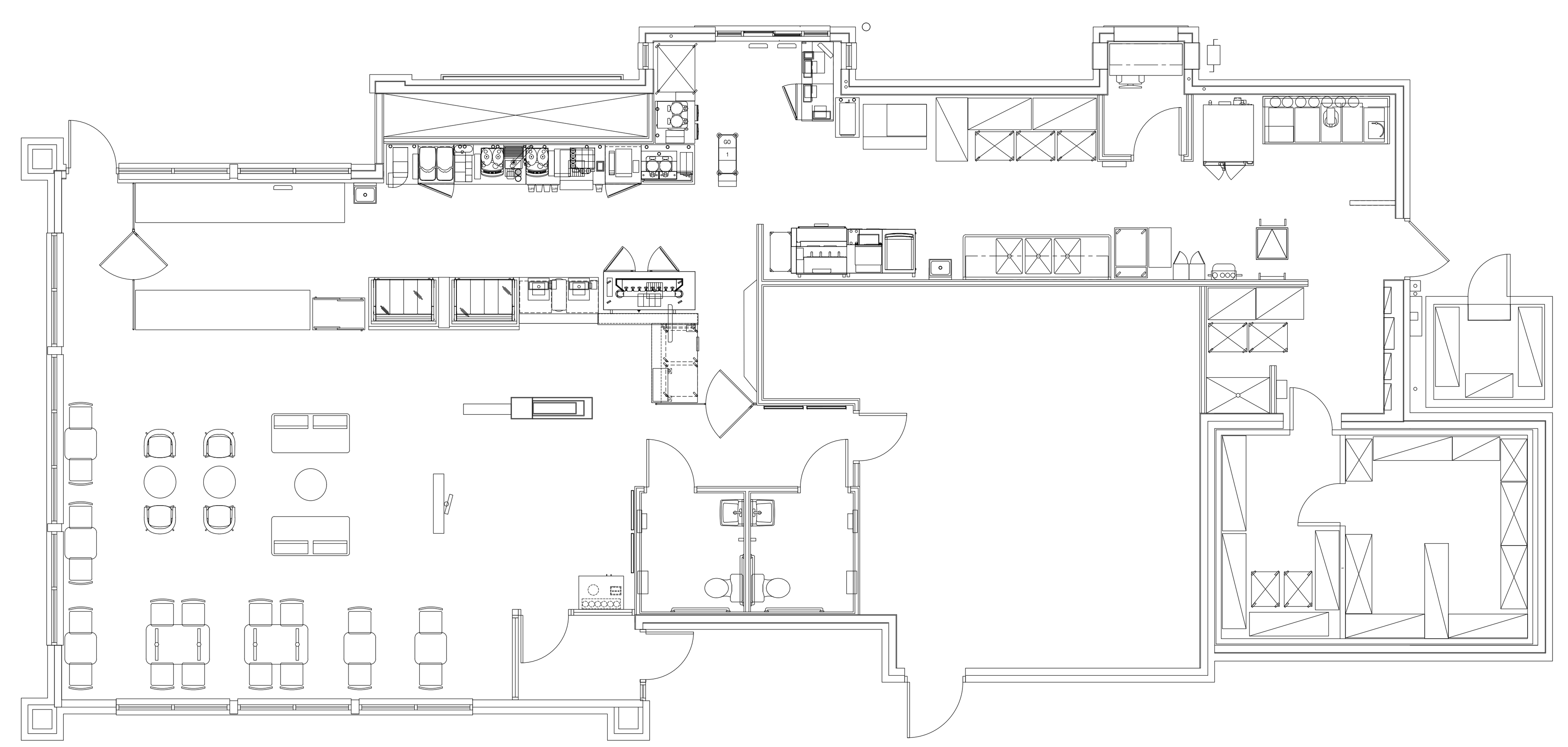

6 OVERVIEW PLAN SCALE:NONE

ALL CONSTRUCTION WORK SHALL BE PERFORMED IN ACCORDANCE WITH THE STATE CONSTRUCTION CODE AND OTHER NATIONAL AND STATE CODES INCLUDING:

NATIONAL FIRE PROTECTION ASSOCIATION (NFPA)

SHOULD CONFLICT BETWEEN CODES OR REFERENCES AND THE CONTRACT DRAWINGS OR SPECIFICATIONS BE OBSERVED BY THE CONTRACTOR, THE CODE OR REFERENCE SHALL BE REFERRED TO THE ENGINEER AND A WRITTEN OPINION BY THE ENGINEER SHALL BE OBTAINED.

GOVERNING CODES & REFERENCES:

2018 INTERNATIONAL BUILDING CODE.
2018 INTERNATIONAL MECHANICAL CODE.
2018 INTERNATIONAL FIRE CODE.
2018 INTERNATIONAL PLUMBING CODE.

7 CODES AND REGULATIONS INFORMATION

DWG#	DRAWING TITLE
H1.1	HVAC OVERVIEW PLAN
H2.1	HVAC PLANS & NOTES
H3.1	HVAC DETAILS
H3.2	HVAC HOOD DETAILS
H4.1	HVAC SCHEDULES
H5.1	GENERAL SPECIFICATIONS
H6.1	HVAC SPECIFICATIONS

8 DRAWING INDEX

ALBERT TAUS
& ASSOCIATES, ARCHITECTS
ALBERT TAUS, A.I.A., ARCHITECT
ARCHITECTURE·PLANNING·INTERIOR DESIGN·ENGINEERING
P H I L A D E L P H I A , P A
PHONE: (215) 698 - 2516 . FAX: (215) 698 - 7398
atausarchitects.com

THESE PLANS ARE THE PROPERTY OF ALBERT TAUS & ASSOCIATES, ARCHITECTS, AND ARE NOT TO BE USED WITHOUT THE EXPRESSED WRITTEN PERMISSION OR CONSENT OF ALBERT A. TAUS, R.A., A.I.A.

STATE OF MISSOURI
ALBERT A. TAUS
NUMBER
A-2015032715
ARCHITECT

SIGNATURE

DOCUMENTS PREPARED FOR
DDW21DOUGLAS, LLC
C/O: MR. HOSSAM SHAHIN
109 E. HALE LAKE RD
WARRENSBURG, MO 64093

ATA200602.10

DATE	04/16/21
SCALE	AS NOTED
DRAWN	
CKD	DJK
APPD	AAT

NO	DESCRIPTION	DATE
-	ISSUED FOR PERMIT	4-29-21
1		
2		
3		
4		
5		
6		

REVISIONS

THESE PLANS ARE CONFIDENTIAL PROPERTY OF DUNKIN' BRANDS INC. UNDER RESTRICTED ACCESS.

PROPOSED PROJECT
DUNKIN'
WITH DRIVE THRU
1100 NE DOUGLAS STREET
LEE'S SUMMIT MO. 64086
NEXT GEN (COOL PALAETTE)
HVAC OVERVIEW PLAN

DUNKIN' BRANDS
[eatdrinkthink]

H1.1

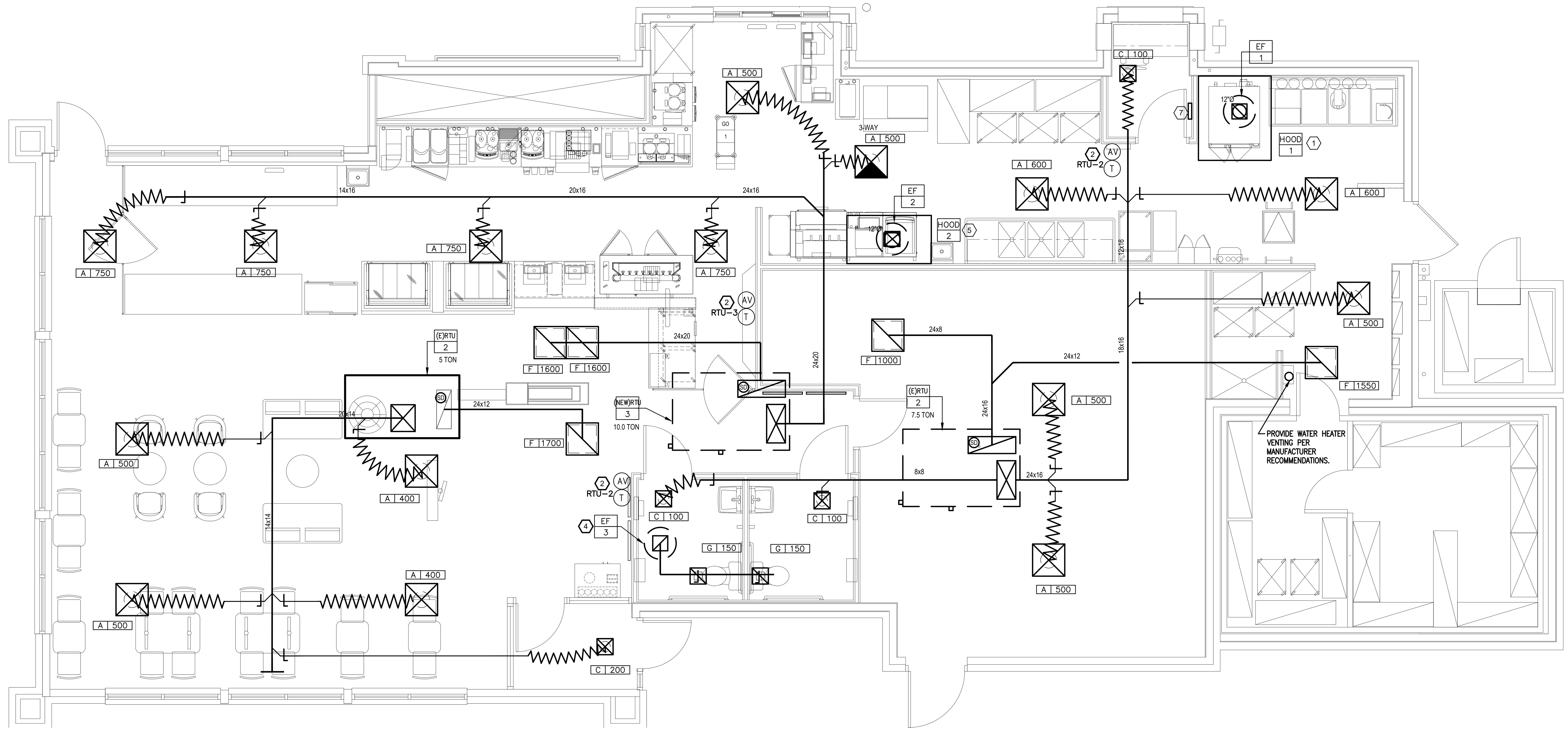

1 MECHANICAL FLOOR PLAN

SCALE: 1/4"=1'-0"

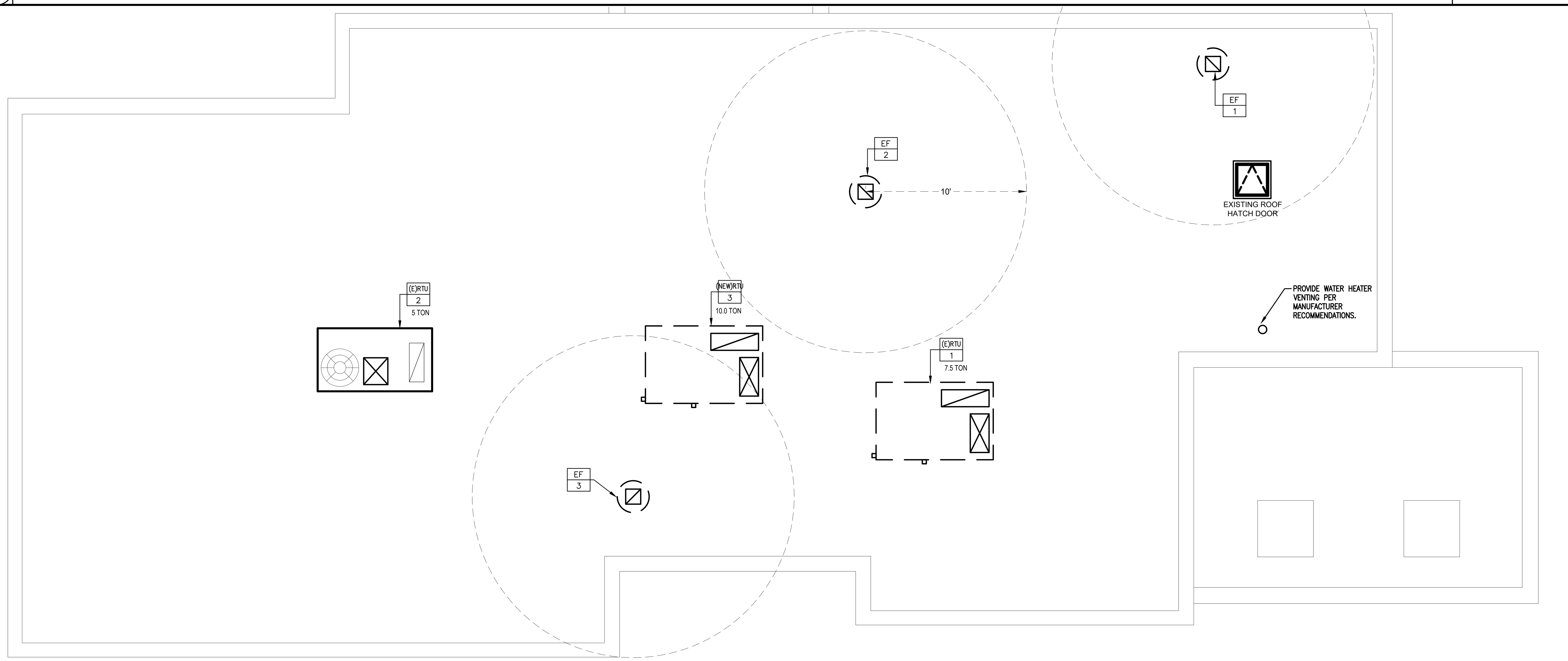

2 MECHANICAL ROOF PLAN

SCALE: 1/4"=1'-0"

HVAC CONTRACTOR

1. HVAC CONTRACTOR SHALL FURNISH AND INSTALL THE HOOD EXHAUST FANS, DUCTWORK, INSULATION WRAP, DIFFUSERS, SMOKE DETECTORS, OCCUPIED/UNOCCUPIED PANEL, AND TEMPERATURE CONTROLS.

2. THE HVAC CONTRACTOR SHALL VERIFY LOCATIONS FOR EF–1, EF–2, AND ANY HOODS ON SITE FROM MOST–RECENT KITCHEN EQUIPMENT PLANS. ALL FANS ARE TO BE UL LISTED.

3. ALL HVAC EQUIPMENT CURBS SHALL BE SUPPLIED BY HVAC CONTRACTOR.

4. ALL RTU CURBS SHALL BE FABRICATED FROM 18 GA. GALVANIZED METAL WITH WELDED CORNERS, WATER TIGHT AND INTERNALLY INSULATED. FACTORY CURB CONVERSION SHALL NOT BE ACCEPTED.

5. SHIMS SHALL BE PROVIDED BY HVAC CONTRACTOR BETWEEN THE ROOF DECK AND THE CURB TO COMPENSATE FOR ROOF PITCH.

6. ALL FLEX DUCT SHALL BE U.L. LISTED, R–6, FOIL–BACKED, CLASSIFIED AS A CLASS 1 AIR DUCT. MAXIMUM LENGTH IS TO BE 12' – 0" PER DROP OR PER LOCAL CODE.

7. ALL METAL DUCT AND AIR DISTRIBUTION DEVICES SHALL BE INSULATED WITH R–6, 2" X .75 DENSITY FOIL–BACKED INSULATION, WITH FIRE AND SMOKE RATING [25]–[50].

8. ALL DUCTWORK TO BE INDEPENDENTLY HUNG FROM STRUCTURAL MEMBERS.

9. ALL DUCTWORK SHALL BE FABRICATED, INSTALLED, SEALED, AND EXTERNALLY INSULATED PER SMACNA LOW–VELOCITY DUCT MANUAL (LATEST ISSUE). INTERNALLY INSULATED DUCT IS NOT PERMITTED.

10. UNLESS OTHERWISE NOTED, ALL SUPPLY TAKEOFFS SHALL HAVE A MANUAL VOLUME CONTROL DAMPER.

11. THE HVAC CONTRACTOR SHALL COORDINATE DIFFUSER LOCATIONS ON SITE WITH THE MOST RECENT REFLECTED CEILING PLAN.

12. THE HVAC CONTRACTOR SHALL FURNISH A WRITTEN GUARANTEE COVERING A ONE–YEAR PERIOD FOR ALL EQUIPMENT AND AN ADDITIONAL FOUR–YEAR PERIOD FOR THE COMPRESSORS IN THE RTUS. ALL FANS TO BE U.L. LISTED.

13. THE HVAC CONTRACTOR SHALL UPON COMPLETION OF PROJECT PERFORM A COMFORT BALANCE OF ALL HVAC EQUIPMENT. IF A TYPE–I HOOD IS USED, PER NFPA96 HVAC CONTRACTOR WILL PROVIDE A CERTIFIED TEST AND BALANCE, AND A WRITTEN REPORT TO NCA CONSULTANTS. ALL CAPACITIES MUST BE SET TO WITHIN ±10% OF AMOUNTS INDICATED ON THE FLOOR PLAN AND SCHEDULES.

14. THE HVAC CONTRACTOR IS TO MAKE ALL LOW–VOLTAGE WIRING FINAL CONNECTIONS FOR ALL HVAC EQUIPMENT INCLUDING TEMPERATURE CONTROLS, RTUS, SMOKE DETECTORS, AND CONTACTOR PANEL.

GENERAL CONTRACTOR

1. IT IS THE RESPONSIBILITY OF THE GENERAL CONTRACTOR TO RECEIVE, OFFLOAD, AND STORE ALL HVAC MATERIALS TO INCLUDE EXHAUST HOOD(S) WHICH ARRIVE AT THE JOB SITE. ALL MATERIAL MUST BE STORED INSIDE THE BUILDING. HOOD(S) MUST BE STORED IN THE KITCHEN.

2. IT IS VERY IMPORTANT THAT ACCURATE MEASUREMENTS ARE USED WHEN LOCATING EXHAUST FAN ROOF OPENING. COORDINATE ROOF OPENINGS WITH THE KITCHEN EQUIPMENT PLAN AND EXHAUST HOOD PLANS. OBTAIN THE CORRECT PLANS FROM THE KITCHEN EQUIPMENT SUPPLIER.

3. RTU ROOF OPENING SIZES AND ROOF CURBS ARE BASED ON EQUIPMENT SHOWN. CLEARANCES SHOWN ARE REQUIRED AND EQUIPMENT SUBSTITUTIONS ARE NOT PERMITTED. FIELD VERIFY ROOF OPENING REQUIREMENTS. MAKE PENETRATIONS AS NEEDED FOR INSTALLATION OF CURBS AND EQUIPMENT. COORDINATE ON SITE WITH HVAC CONTRACTOR. ENSURE THAT ROOFING MATERIAL DOES NOT COVER THE TOP OF ANY HVAC EQUIPMENT CURB.

4. ALL ROOF, CEILING, WALL, AND STRUCTURAL FRAMING/PENETRATIONS REQUIRED FOR UNIT, FAN, DUCT, DIFFUSER, AND ALL OTHER HVAC WORK SHALL BE BY THE G.C.

5. THE G.C. IS TO ENSURE THAT THE GRID CEILING LINES UP UNDER THE TRUSSES.

ELECTRICAL CONTRACTOR

1. THE ELECTRICAL CONTRACTOR SHALL FURNISH AND INSTALL PITCH POCKETS FOR POWER AND CONTROL WIRING, AND IS TO MAINTAIN 12'' MINIMUM CLEARANCE FROM BACK PANEL OF AIR CONDITIONING UNITS. DO NOT PENETRATE BOTTOM OF RTU CURB.

2. THE ELECTRICAL CONTRACTOR SHALL INSTALL LOW–VOLTAGE CONTROL WIRING FOR ALL AIR CONDITIONING CONTROLS.

3. THE ELECTRICAL CONTRACTOR SHALL FURNISH AND INSTALL DISCONNECTS FOR RTUS AND INTERLOCK RESTROOM FAN TO RUN CONTINUOUSLY WHILE DINING ROOM LIGHTS ARE ON. INTERLOCK KITCHEN FANS WITH THE EQUIPMENT SERVED.

4. THE ELECTRICAL CONTRACTOR SHALL USE A MINIMUM OF 4'–6'' SEALTITE FLEXIBLE CONDUIT WHEN WIRING KITCHEN HOOD EXHAUST FANS ON ROOF SO THAT FANS MAY BE REMOVED FROM CURBS AND PLACED ON ROOF FOR CLEANING EXHAUST DUCTWORK.

5. THE ELECTRICAL CONTRACTOR SHALL PROVIDE COMPONENTS– AUDIBLE AND VISUAL ANNUNCIATORS AND TWO SINGLE–GANG RECEPTACLE TEST STATIONS WITH GREEN AND RED LIGHT INDICATORS. EACH UNIT WILL BE EQUIPPED; ONE RECEPTACLE FOR THE T–STAT AND ONE FOR THE ANNUNCIATOR. THE FIRE AND MECHANICAL INSPECTORS WILL DETERMINE SUITABLE LOCATION FOR TEST STATIONS. ANNUNCIATORS AND TEST STATION WILL BE LOOPED IN THE CIRCUITRY OF THE SMOKE DETECTION DEVICES. WIRING WILL BE SUPPLIED AND COMPLETED BY ELECTRICAL CONTRACTOR.

PLUMBING CONTRACTOR

1. THE PLUMBING CONTRACTOR TO PROVIDE AND INSTALL CONDENSATE DRAINS/GAS PIPING FOR ALL A/C UNITS AND UNIT HEATER, AND PITCH POCKETS FOR RTU CONNECTIONS. DO NOT PENETRATE BOTTOM OF RTU CURB.

2. THE PLUMBING CONTRACTOR IS TO COORDINATE PLUMBING VENT STACKS AND WATER HEATER FLUES WITH OUTSIDE AIR INTAKES OF A/C UNITS. 10'–0'' MINIMUM CLEARANCE REQUIRED OR PER LOCAL CODE.

3. THE PLUMBING CONTRACTOR SHALL PROVIDE AND INSTALL FLUE GAS EXHAUST VENT FOR WATER HEATER. MAINTAIN 10'–0" MINIMUM CLEARANCE TO AIR INTAKES, OR PER LOCAL CODE. COORDINATE ON SITE WITH G.C. AND HVAC CONTRACTOR.

PROVIDE ADEQUATE FALL PROTECTION,

A ROOF PARAPET SHOULD BE AT LEAST 42" IN HEIGHT,
THE ROOFTOP EQUIPMENT SHOULD BE LOCATED 10'–0" AWAY FROM THE ROOF EDGE.
IF NOT PROVIDE 42" HIGH SAFETY GUARD RAIL. RAIL TO EXTEND 30" BEYOND EDGE OF ROOF MOUNTED EQUIPMENT .
COORDINATE GUARD RAIL LENGTH IN FIELD WITH EQUIPMENT DIMENSIONS.

3 CONTRACTORS NOTES

1. PROVIDE EXHAUST HOOD OVER OVEN. RUN 10"ø SHEETMETAL DUCT FROM HOOD TO EXHAUST FAN ON ROOF. OFFSET AND TRANSITION AT CONNECTIONS AS NEEDED. VERIFY DIMENSIONS PRIOR TO FABRICATION OR INSTALLATION. USE FACTORY–MANUFACTURED PIPE AND FITTINGS ONLY. CONFIRM LOCATION ON SITE WITH MOST RECENT KITCHEN PLANS. NOTE: MUNICIPALITIES MAY REQUIRE A U.L. LISTED TYPE–II "HEAT ONLY" CONDENSATE HOOD OVER THE OVENS. IF A HOOD IS REQUIRED, CONTACT NCA CONSULTANTS @ (877) 530–0078 FOR SPECIFICATIONS AND PRICING.
PROVIDE A HEAT SENSOR OR OTHER DEVICE TO INSURE THE AUTOMATIC OPERATION OF THE KITCHEN HOOD SYSTEMS UPON ACTIVATION OF THE COOKING DEVICES

2. PRE–SET THERMOSTAT WITH LOCKING COVER. INSTALL 66" A.F.F. IN A WALL NEAR LOCATION SHOWN. SEAL WALL OPENINGS WITH CAULK. AUDIO–VISUAL ANNUNCIATOR TIED INTO SMOKE DETECTOR. COORDINATE LOCATION ON SITE WITH G.C. AND EQUIPMENT. AVOID SOURCES OF HEAT.

3. TYPE "B" FLUE THROUGH ROOF WITH WEATHER–PROOF CAP, CONE FLASHING, AND RAIN SHIELD PROVIDED BY PLUMBING CONTRACTOR. ROUTE AS SHOWN SO THAT DISCHARGE IS MINIMUM 10 FEET FROM AIR INTAKES. OFFSET AS NEEDED. USE FACTORY–MANUFACTURED PIPE AND FITTINGS ONLY.

4. 10X10 SHEETMETAL DUCT RISER UP TO EXHAUST FAN ON ROOF. OFFSET AND TRANSITION AS NEEDED.

5. PROVIDE EXHAUST HOOD OVER TOASTER AND TURBO OVENS. RUN 12"ø SHEETMETAL DUCT FROM CONNECTION ON HOOD TO EXHAUST FAN ON ROOF. OFFSET AND TRANSITIO N AT CONNECTIONS AS NEEDED. VERIFY DIMENSIONS PRIOR TO FABRICATION OR INSTALLATION. USE FACTORY–MANUFACTURED PIPE AND FITTINGS ONLY. CONFIRM LOCATION ON SITE WITH MOST RECENT KITCHEN PLANS. NOTE: MUNICIPALITIES MAY REQUIRE A U.L. LISTED TYPE–II "HEAT ONLY" CONDENSATE HOOD OVER THE OVENS. IF A HOOD IS REQUIRED, CONTACT NCA CONSULTANTS @ (877) 530–0078 FOR SPECIFICATIONS AND PRICING.
PROVIDE A HEAT SENSOR OR OTHER DEVICE TO INSURE THE AUTOMATIC OPERATION OF THE KITCHEN HOOD SYSTEMS UPON ACTIVATION OF THE COOKING DEVICES

6. SHIM CURBS ON ROOF IN ORDER TO MAKE TOP OF CURBS LEVEL.

7. OCCUPIED/UNOCCUPIED PANEL FOR NIGHT SET–BACK LOCATED IN MANAGERS OFFICE. COORDINATE LOCATION ON SITE WITH GENERAL CONTRACTOR.

8. PROVIDE ADEQUATE FALL PROTECTION,
A ROOF PARAPET SHOULD BE AT LEAST 42" IN HEIGHT,
THE ROOFTOP EQUIPMENT SHOULD BE LOCATED 10'–0" AWAY FROM THE ROOF EDGE.
IF NOT PROVIDE 42" HIGH SAFETY GUARD RAIL. RAIL TO EXTEND 30" BEYOND EDGE OF ROOF MOUNTED EQUIPMENT . COORDINATE GUARD RAIL LENGTH IN FIELD WITH EQUIPMENT DIMENSIONS.

4 KEY NOTES

ALBERT TAUS
& ASSOCIATES, ARCHITECTS
ALBERT TAUS, A.I.A., ARCHITECT
ARCHITECTURE·PLANNING·INTERIOR DESIGN·ENGINEERING
PHILADELPHIA, PA
PHONE: (215) 698 - 2516 · FAX: (215) 698 - 7398
atausarchitects.com

THESE PLANS ARE THE PROPERTY OF ALBERT TAUS & ASSOCIATES, ARCHITECTS, AND ARE NOT TO BE USED WITHOUT THE EXPRESSED WRITTEN PERMISSION OR CONSENT OF ALBERT A. TAUS, R.A., A.I.A.

STATE OF MISSOURI
ALBERT A. TAUS
NUMBER
A-2015032715
ARCHITECT

SIGNATURE

DOCUMENTS PREPARED FOR
DDW21DOUGLAS, LLC
C/O: MR. HOSSAM SHAHIN
109 E. HALE LAKE RD
WARRENSBURG, MO 64093

ATA200602.10

DATE	04/16/21
SCALE	AS NOTED
DRAWN	
CKD	DJK
APPD	AAT

NO	DESCRIPTION	DATE
6		
5		
4		
3		
2		
1		
–	ISSUED FOR PERMIT	4–29–21

REVISIONS

PROPOSED PROJECT
DUNKIN'
WITH DRIVE THRU
1100 NE DOUGLAS STREET
LEE'S SUMMIT MO. 64086
NEXT GEN (COOL PALAETTE)
HVAC PLANS & NOTES

THESE PLANS ARE CONFIDENTIAL PROPERTY OF DUNKIN' BRANDS INC. UNDER RESTRICTED ACCESS.

DUNKIN' BRANDS
[eatdrinkthink]

H2.1

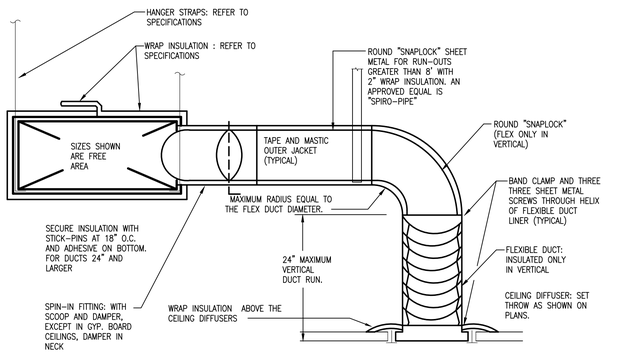

1 TYPICAL DIFFUSER CONNECTION DETAIL — SCALE:NONE

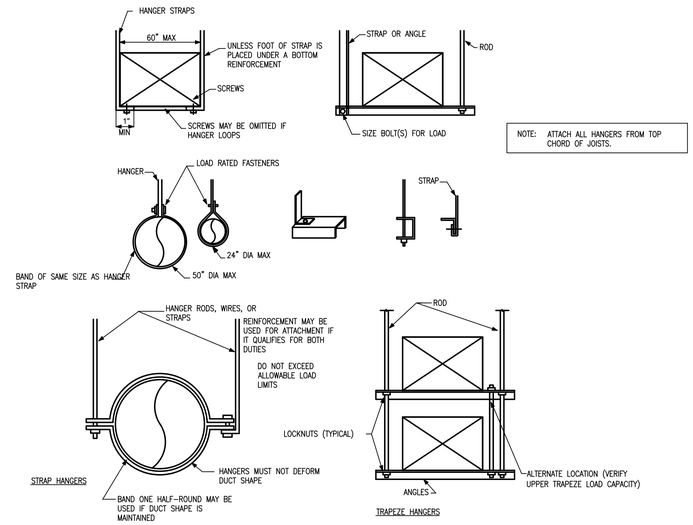

2 HANGER ATTACHMENT DETAILS — SCALE:NONE

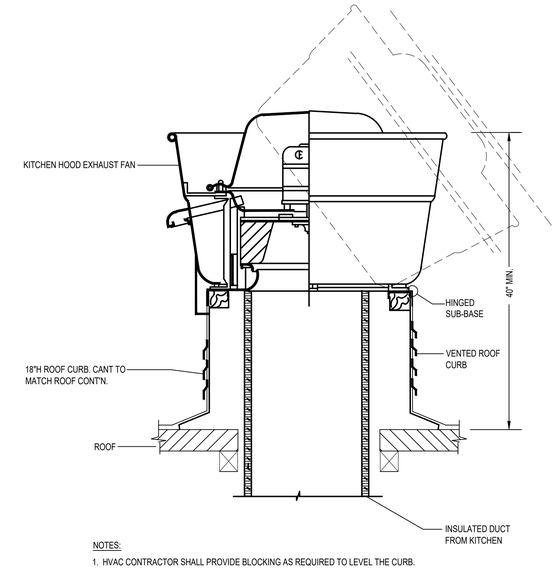

NOTES:

1. HVAC CONTRACTOR SHALL PROVIDE BLOCKING AS REQUIRED TO LEVEL THE CURB.

3 HOOD EXHAUST FAN DETAIL

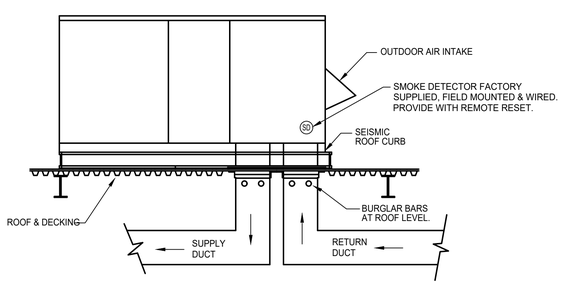

4 TYPICAL CURB MOUNTED HVAC DETAIL — SCALE:NONE

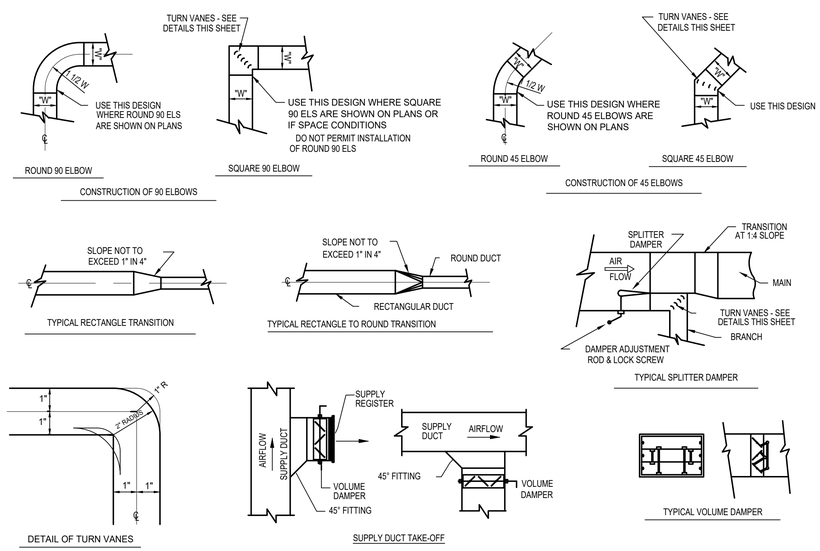

5 DUCTWORK DETAILS — SCALE:NONE

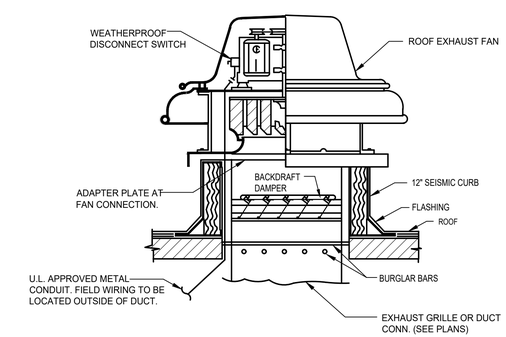

6 ROOF EXHAUSTER DETAIL

ALBERT TAUS & ASSOCIATES, ARCHITECTS
ALBERT TAUS, AIA, ARCHITECT
ARCHITECTURE-PLANNING-INTERIOR DESIGN-ENGINEERING
PHONE: (215) 698-2516 - FAX: (215) 698-7398
PHILADELPHIA
atausarchitects.com

THESE PLANS ARE THE PROPERTY OF ALBERT TAUS & ASSOCIATES, ARCHITECTS, AND ARE NOT TO BE USED WITHOUT THE EXPRESSED WRITTEN PERMISSION OR CONSENT OF ALBERT A. TAUS, R.A., A.I.A.

SIGNATURE

STATE OF MISSOURI
ALBERT A. TAUS
NUMBER A-2015032715
ARCHITECT

DOCUMENTS PREPARED FOR
DDW2DOUGLAS, LLC
C/O: MR. HOSSAM SHAHIN
109 E. HALE LAKE RD
WARRENSBURG, MO 64093

ATA200602.10

	DATE	04/16/21
	SCALE	AS NOTED
	DRAWN	
	CKD	DJK
	APPD	AAT

NO	DESCRIPTION	DATE
6		
5		
4		
3		
2		
1	ISSUED FOR PERMIT	4-29-21

REVISIONS

THESE PLANS ARE CONFIDENTIAL PROPERTY OF DUNKIN' BRANDS, INC. AND ARE RESTRICTED ACCESS

PROPOSED PROJECT
DUNKIN'
WITH DRIVE THRU
1100 NE DOUGLAS STREET
LEE'S SUMMIT MO 64086
NEXT GEN (COOL PALAETTE)

HVAC DETAILS

DUNKIN' BRANDS
[enDrinkinME]

H3.1

HOOD ASSEMBLY

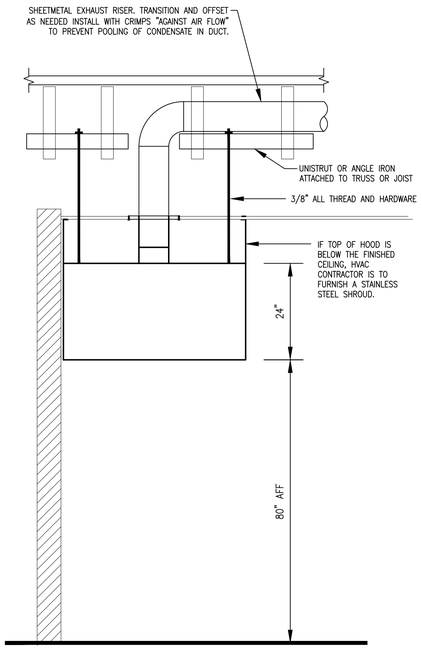

HANGING ANGLE DETAIL

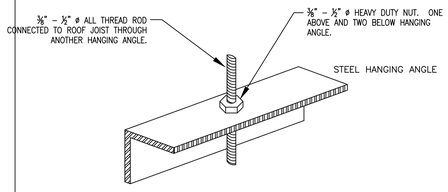

HOOD CONTROL SEQUENCE OF OPERATION

AUTOMATIC CONTROL:

- THE HOOD SYSTEM WILL TURN ON AUTOMATICALLY (SENSOR ACTIVATED) ONCE THE TEMPERATURE WITHIN THE HOOD SYSTEM REACHES A SET TEMPERATURE. THE INDICATOR LIGHT ADJACENT TO THE FANS BUTTON ON THE TOUCH SCREEN USER INTERFACE WILL ILLUMINATE. THE LIGHTS WILL NEED TO BE TURNS ON MANUALLY.
- THE HOOD SYSTEM WILL TURN OFF AUTOMATICALLY (SENSOR ACTIVATED) AS DESCRIBED ABOVE. MANUALLY ON/OFF SWITCH IS NOT ACCEPTABLE.

GENERAL:

- THE MECHANICAL CONTRACTOR SHALL COORDINATE WITH CAPTIVE AIRE.
- THE MECHANICAL CONTRACTOR SHALL COORDINATE WITH THE ELECTRICAL CONTRACTOR ON THE REQUIRED WIRING OF THE OF THE HOOD CONTROLS PER THE CAPTIVE AIRE DRAWINGS.

GENERAL NOTES

A. ALL ELECTRICAL "FIELD" CONNECTIONS AND RELATED INTERCONNECTIONS BY ELECTRICAL CONTRACTOR.

B. ALL PLUMBING "FIELD" CONNECTIONS AND RELATED INTERCONNECTIONS BY PLUMBING CONTRACTOR.

C. ALL ASSOCIATED HANGER MATERIALS BY INSTALLING CONTRACTOR.

D. ANY LIGHTS SHOWN INSTALLED BY THE MANUFACTURER, AND FACTORY PREWIRED PER THE PLANS. INTERCONNECTIONS BETWEEN HOODS AND TO SWITCHES BY ELECTRICAL CONTRACTOR.

E. SEISMIC RESTRAINTS ARE RESPONSIBILITY OF INSTALLING CONTRACTOR.

F. INSTALLING CONTRACTOR ASSUMES ALL RELATED RESPONSIBILITY FOR VERIFICATION OF DIMENSIONAL DATA CONTAINED ON THESE DOCUMENTS FOR ACCURACY, INTEGRATION, AND ADMINISTRATION OF CODE REQUIREMENTS IN EFFECT PRIOR TO ANY RELEASE FOR PRODUCTION OF EQUIPMENT SHOWN.

G. SIGNED AND "APPROVED" COPIES OF THIS DOCUMENT MUST BE RECEIVED BY THE FACTORY PRIOR TO COMMENCEMENT OF FABRICATION.

H. NOMINAL HOOD DIMENSIONS AS SHOWN ON DRAWINGS.

I. THE HOODS INDICATED SHALL BE CAPTIVE-AIRE MODEL VHB OR APPROVED EQUAL. THE HOOD SHALL BE SINGLE WALL TYPE HOOD WITH NO BUILT-IN MAKE-UP AIR CAPABILITIES. THE HOOD COMPONENTS SHALL BE FABRICATED OF TYPE 304 STAINLESS STEEL WITH A #3 OR #4 POLISH, ON ALL EXPOSED SURFACES. THE HOOD SHALL BE PROVIDED WITH HANGING ANGLES ON EACH END OF THE HOOD. NOMINAL HOOD DIMENSIONS SHALL BE AS SHOWN ON DRAWINGS.

HOOD INFORMATION – Job#2887537

HOOD NO.	TAG	MODEL	LENGTH	MAX. COOKING TEMP.	EXHAUST PLENUM						HOOD CONSTRUCTION	HOOD HANGING WGHT
					TOTAL EXH. CFM	WIDTH	LENG.	RISER(S) DIA.	CFM	S.P.		
1	Back House Oven	6624 VHB	4' 6.00"	700 Deg.	450			10"	450	-0.041"	430 SS 100%	237 LBS

CAPTIVE-AIRE HOODS ARE BUILT IN COMPLIANCE WITH

Intertek

NFPA #96
UL 710 & ULC710 STANDARDS
E.T.L. LISTED 3054804-001

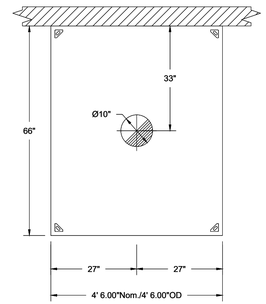

PLAN VIEW – Hood #1 (Back House Oven)
4' 6.00" LONG 6624VHB

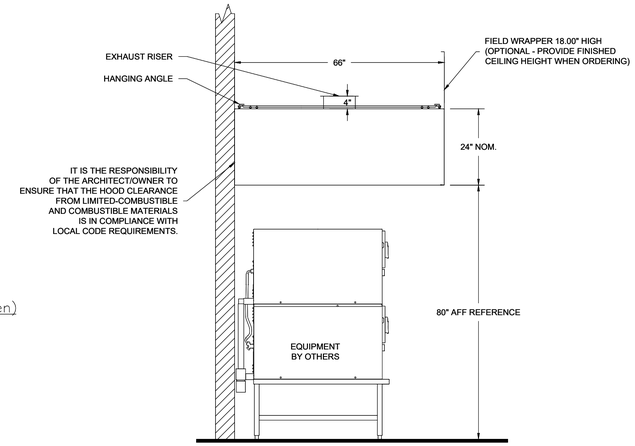

SECTION VIEW – MODEL 6624VHB
HOOD – #1 (Back House Oven)

CORNER HANGING ANGLE

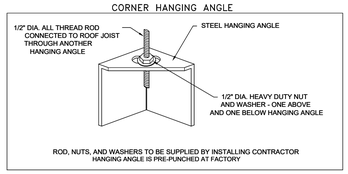

FOR QUESTIONS, CALL THE
SOUTHWEST FLORIDA REGIONAL OFFICE
4519 GEORGE RD, SUITE 150, TAMPA, FL 33634
PHONE: (800)378-2471 FAX: (813)354-4825

CAPTIVEAIRE

JOB JOBNAME	
LOCATION CITYSTATE	
DATE DATE	JOB # JOBNO
DWG # DRAWINGNO	DRAWN BY DRAWNBY
REV. REVISION	SCALE SCALE

HOOD INFORMATION – Job#2887537

HOOD NO.	TAG	MODEL	LENGTH	MAX. COOKING TEMP.	EXHAUST PLENUM						HOOD CONSTRUCTION	HOOD HANGING WGHT
					TOTAL EXH. CFM	WIDTH	LENG.	RISER(S) DIA.	CFM	S.P.		
2	Sandwich Station	3624 VHB	5'-3"	700 Deg.	525			10"	525	-0.056"	430 SS 100%	172 LBS

CAPTIVE-AIRE HOODS ARE BUILT IN COMPLIANCE WITH

Intertek

NFPA #96
UL 710 & ULC710 STANDARDS
E.T.L. LISTED 3054804-001

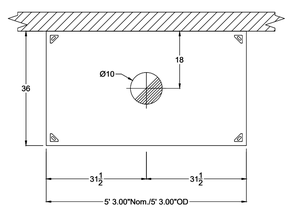

PLAN VIEW – Hood #2 (Sandwich Station)
5' 3.00" LONG 3624VHB

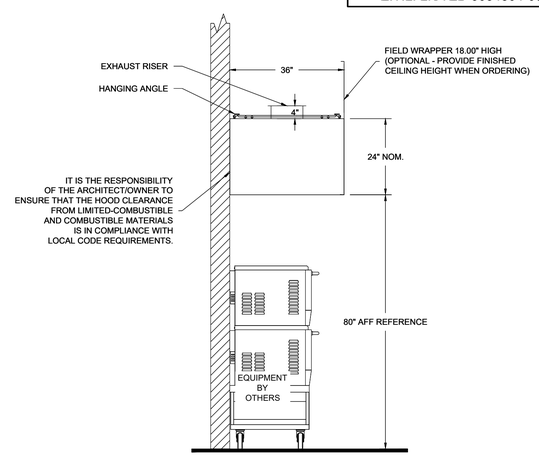

SECTION VIEW – MODEL 3624VHB
HOOD – #2 (Sandwich Station)

CORNER HANGING ANGLE

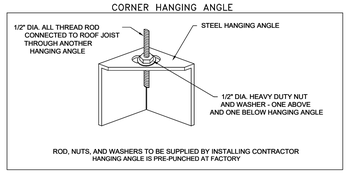

FOR QUESTIONS, CALL THE
SOUTHWEST FLORIDA REGIONAL OFFICE
4519 GEORGE RD, SUITE 150, TAMPA, FL 33634
PHONE: (800)378-2471 FAX: (813)354-4825

CAPTIVEAIRE

JOB JOBNAME	
LOCATION CITYSTATE	
DATE DATE	JOB # JOBNO
DWG # DRAWINGNO	DRAWN BY DRAWNBY
REV. REVISION	SCALE SCALE

ALBERT TAUS & ASSOCIATES, ARCHITECTS
ALBERT TAUS, AIA, ARCHITECT
ARCHITECTURE-PLANNING-INTERIOR DESIGN-ENGINEERING
PHONE: (215) 698-2516 FAX: (215) 698-7398
PHILADELPHIA
atausarchitects.com

THESE PLANS ARE THE PROPERTY OF ALBERT TAUS & ASSOCIATES, ARCHITECTS, AND ARE NOT TO BE USED WITHOUT THE EXPRESSED WRITTEN PERMISSION OR CONSENT OF ALBERT A. TAUS, R.A., A.I.A.

STATE OF MISSOURI
ALBERT A. TAUS
NUMBER A-2015032715
ARCHITECT

SIGNATURE

DOCUMENTS PREPARED FOR
DDW2DOUGLAS, LLC
C/o: MR HOSSAM SHAHIN
109 E. HALE LAKE RD
WARRENSBURG, MO 64093

ATA200602.10

NO	DESCRIPTION	DATE
6		
5		
4		
3		
2		
1	ISSUED FOR PERMIT	4-29-21

REVISIONS

DATE	04/16/21
SCALE	AS NOTED
DRAWN	
CKD	DJK
APPD	AAT

THESE PLANS ARE CONFIDENTIAL PROPERTY OF DUNKIN BRANDS, INC. UNLESS RESTRICTED ACCESS

PROPOSED PROJECT
DUNKIN'
WITH DRIVE THRU
100 NE DOUGLAS STREET
LEE'S SUMMIT MO, 64086

NEXT GEN (COOL PALAETTE)

HVAC HOOD DETAILS

DUNKIN' BRANDS [enrdrinkabit]

H3.2

NEW ROOFTOP UNIT SCHEDULE

UNIT	COIL NOMINALTONS (TON)	AREA SERVED	REFRIGERANT	UNIT MODEL NUMBER	HOT GAS REHEAT	SUPPLY FAN SUPPLY (CFM)	SUPPLY FAN OUTDOOR MIN	SUPPLY FAN ESP (IN.WC)	SUPPLY FAN MOTOR (BHP)	COOLING NET TOTAL (MBH)	COOLING SENS (MBH)	COOLING COIL EAT DB/WB (°F)	COOLING COIL LAT DB/WB (°F)	COOLING STAGES	COOLING EER SEER	HEATING SOURCE	HEATING INPUT (MBH)	HEATING OUTPUT (MBH)	HEATING LAT (°F)	HEATING STAGES	ELECTRICAL V/PH	ELECTRICAL MCA (AMP)	ELECTRICAL MOCP (AMP)	INTERLOCKED WITH	TOTAL WEIGHT (LB)
RTU-3	10	DINNING AREA	R-410A	YHC120	YES	4000	800	1.0	2.62	106.6	86.7	80/67	60.26/58.39	3	12.4	NATURAL GAS	250	200	116.5	2	208/3	44	60	T-STAT	1800

NOTES:
1. SELECTION IS BASED ON CARRIER.
2. UNIT SHALL BE BOTTOM DISCHARGE.
3. UNIT TO BE A COMPLETE PACKAGE INCLUDING ALL CONTROLS.
4. STATIC PRESSURE INDICATED ABOVE IS THE EXTERNAL STATIC PRESSURE WHICH EXCLUDES ANY PRESSURE DROPS WITHIN THE UNIT.
5. UNITS SHALL BE COMPLETE WITH SIDE OUTLET DRAIN AND ACCESS DOORS.
6. CONTRACTOR TO ENSURE THAT OUTDOOR AIR INTAKES ARE A MINIMUM OF 10'-0" AWAY FROM ANY EXHAUST FAN DISCHARGE, PLUMBING VENT OR OTHER CONTAMINANT SOURCE.
7. MAXIMUM AIR VELOCITY THRU COOLING SHALL NOT EXCEED 500 FEET PER MINUTE.
8. FACTORY MOUNTED 24V SMOKE DETECTOR IN RETURN PLENUM. PROVIDE W/REMOTE RESET.
9. ELECTRICAL CONNECTION TO BE SINGLE POINT AND TO BE THROUGH THE BOTTOM OF THE UNIT. PROVIDE FUSED DISCONNECT SWITCH.
10. UNIT SHALL BE RATED AT 95 DEGREE FAHRENHEIT AMBIENT.
11. REFRIGERANT R-410A
12. PROGRAMMABLE THERMOSTAT W/ NIGHT SETBACK AND REMOTE SENSORS FOR EACH UNIT
13. PROVIDE UNIT WITH HOT GAS REHEAT AND ASSOCIATED CONTROLS AND SENSORS FOR DEHUMIDIFICATION CONTROL.

ACCESSORIES:
1. POWER DISCONNECT SWITCH.
2. HINGED ACCESS DOORS.
3. CONVENIENCE OUTLET.
4. DIFF ENTHALPY ECONOMIZER.
5. MOTORIZED OUTDOOR AIR DAMPERS.
6. 2" PLEATED AIR FILTER.
7. OUTDOOR AIR INTAKE HOOD.
8. AIR FLOW SWITCH
9. GRAVITY RELIEF DAMPERS.
10. PROVIDE SPACE TEMPERATURE SENSORS
11. HIGH PRESSURE CUT-OUT.
12. SEISMIC CURB SLOPED TO MATCH ROOF. REFER TO ARCHITECTURAL DRAWINGS FOR ROOF SLOPE.

1 HVAC UNIT SCHEDULE

UNIT NUMBER	EF-1	EF-2	EF-3
AREA SERVED	MINI RACK OVEN	TOASTER/TURBOS	RESTROOMS
MANUFACTURER	CAPTIVE-AIRE	CAPTIVE-AIRE	CAPTIVE-AIRE
MODEL	DU12HFA	DU33HFA	DR08HFA
CFM	450	525	300
STATIC PRESSURE	0.75"	0.75"	0.50"
FAN HORSEPOWER	0.25	0.25	0.08
DRIVE	DIRECT	DIRECT	DIRECT
RPM	1266	1313	1398
ELECTRICAL REQUIREMENT, V/PHASE/HZ	120/1/60	120/1/60	120/1/60
NCA CURB LXWXH @ FLANGE	19.5X19.5X12	19.5X19.5X12	-
ACCESSORIES	A,B,D,E,H,I,J,K,L	A,B,D,H,E,I,J,K,L	A,B,C,D,E,G,H,K,L

NOTES/ACCESSORIES
A. ALUMINIZED BIRDSCREEN
B. SAFETY DISCONNECT SWITCH
C. GRAVITY BACKDRAFT DAMPER
D. AMCA SEAL & U.L. CERTIFIED
E. SPEED CONTROL
G. INTERLOCK WITH DINING ROOM LIGHTS
H. 12" HIGH PREFABRICATED ROOF CURB
I. INTERLOCK WITH EQUIPMENT SERVED
J. REFER TO KITCHEN BALANCE SCHEDULE
K. ENSURE 10' - 0" MINIMUM CLEARANCE FROM AIR INTAKES
L. COORDINATE WITH MANUFACTURER FOR FINAL SELECTION

2 EXHAUST FAN SCHEDULE

SYM.	SIZE	TYPE	DUCT SIZE	MODEL#	FINISH	BOOT SIZE	OPENING SIZE
A	24X24	SUPPLY 4 WAY	12"Ø	NCA12	WHITE	12"Ø	T-BAR
B	24X24	SUPPLY 3 WAY	12"Ø	NCA12	WHITE	12"Ø	T-BAR
E**	12X12	SUPPLY 4 WAY	6"Ø	RH-1	WHITE	12X12	SIZE + 1/4"
F	24X24	RETURN	18"Ø	RH-6	WHITE	22X22	T-BAR
G	12X12	EXHAUST	12"Ø	RH-6	WHITE	22X22	T-BAR
J	12X12	EXHAUST	6"Ø	RH-1	WHITE	12X12	SIZE + 1/4"
SR	20X8	SUPPLY	-	4004P	-	20x8	DUCT MOUNTED
RR	36X12	RETURN	-	RH	-	36X12	DUCT MOUNTED

ALL DIFFUSERS SHALL BE MANUFACTURED BY METALAIRE AND 100% ALUMINUM CONSTRUCTION
* PROVIDE WITH OPPOSED-BLADE DAMPER AND DUAL DEFLECTION BLADES
** PROVIDE WITH OPPOSED-BLADE DAMPER

3 DIFFUSER & GRILLE SCHEDULE

ALBERT TAUS & ASSOCIATES, ARCHITECTS
ALBERT TAUS, AIA, ARCHITECT
ARCHITECTURE-PLANNING-INTERIOR DESIGN-ENGINEERING
PHONE: (215) 698-2516 - FAX: (215) 698-7398
PO BOX 1 - PHILADELPHIA PA
atausarchitects.com

THESE PLANS ARE THE PROPERTY OF ALBERT TAUS & ASSOCIATES, ARCHITECTS, AND ARE NOT TO BE USED WITHOUT THE EXPRESSED WRITTEN PERMISSION OR CONSENT OF ALBERT A. TAUS, R.A., A.I.A.

STATE OF MISSOURI
ALBERT A. TAUS
NUMBER A-2015032715
ARCHITECT

SIGNATURE

DOCUMENTS PREPARED FOR
DDW2DOUGLAS, LLC
C/O: MR. HOSSAM SHAHIN
109 E. HALE LAKE RD
WARRENSBURG, MO 64093

ATA200602.10

NO	DESCRIPTION	DATE
6		
5		
4		
3		
2		
1	ISSUED FOR PERMIT	4-29-21

REVISIONS

DATE	04/16/21
SCALE	AS NOTED
DRAWN	
CKD	DJK
APPD	AAT

THESE PLANS ARE CONFIDENTIAL PROPERTY OF DUNKIN BRANDS, INC. UNDER RESTRICTED ACCESS

PROPOSED PROJECT
DUNKIN'
WITH DRIVE THRU
1100 NE DOUGLAS STREET
LEE'S SUMMIT MO. 64086

NEXT GEN (COOL PALAETTE)

HVAC SCHEDULES

DUNKIN' BRANDS
[eat drink]

H4.1

DIVISION 1 – GENERAL REQUIREMENTS
SECTION 15000 – SUPPLEMENTARY GENERAL CONDITIONS FOR MECHANICAL AND ELECTRICAL WORK

15000.01 GENERAL

A. The requirements included under this part are supplementary to those contained in the respective Plumbing, Sprinkler, Heating, Ventilating, Air Conditioning and Electrical Specifications and form a part of these individual specifications.

15000.02 DEFINITIONS

A. Contractor's attention is called to "Definitions" in General Conditions. In addition, the terms "provide" and/or "furnish" shall be understood to include supplying, placing, and/or installing, connecting, and delivering for use, for purpose intended.

B. The word "Contractor" and the term "This Contractor" are hereby interpreted to mean the individual, co–partnership firm or corporation to whom the contracts for the Plumbing, Sprinkler, Heating Ventilating, Air Conditioning and Electrical installation has been awarded.

15000.03 PERMITS AND CERTIFICATES

A. Contractor shall secure and pay for all licenses, permits and inspection fees required by local agencies and/or other agencies having jurisdiction for the performance of his part of the work. Contractor, by submitting his bid, agrees to furnish any additional labor or material required in order to comply with all local and other agencies having jurisdiction at no additional cost. Contractor shall obtain certificates of inspections and approval from all authorities having jurisdiction and forward copies of same to Architect for completion of files prior to final acceptance of work.

15000.04 CODES, RULES AND REGULATIONS

A. Contractor must fully acquaint himself with and abide by all laws, rules and regulations of all authorities having jurisdiction and as required to furnish all materials and perform all work under this Contract in strict accordance with such laws, rules and regulations.

B. Contractor shall procure all necessary permits and licenses to carry out his work and pay for all lawful fees therefore. He shall also give the proper persons all requisites or desired notices relating to the work.

C. Rules and regulations shall be complied with as set forth in the latest edition of the following works, including any supplements thereto, that may be in effect.

1. National Electrical Code
2. STATE Building Code, Mechanical Code and Plumbing Code
3. National Fire Protection Association
4. All applicable regulations of the Utility Companies
5. All applicable State and Local Codes

15000.05 DRAWINGS AND SPECIFICATIONS

A. Accompanying drawings show in diagrammatic form the desired arrangement and principal apparatus, piping, ductwork, wiring, etc., and shall be followed as closely as possible, but proper judgment must be exercised during installation to secure maximum headroom and space conditions throughout, to obtain a neat arrangement of piping, ductwork and equipment, and to overcome local difficulties and interference of structural or other prevailing conditions where encountered.

B. If Contractor deviates from drawings unnecessarily, he shall furnish, at his own expense, any additional labor and materials which may be necessary to correct the work.

C. Exact locations and arrangements of all parts shall be determined as work progresses – the work in all details being subject to approval of Architect, whom decision on all points in question shall be final and binding upon the Contractor.

D. Contractor shall note that all service connections may not be shown in true position. Each bidder is cautioned to verify same with field conditions.

15000.06 RECORD DRAWINGS

A. During construction, Contractor shall keep an accurate record of all deviations between work as shown on drawings and that which is actually installed.

Particular attention is directed to invert elevations, location of underground lines, change orders, etc.

B. Upon completion of the job, Contractor shall deliver to the Architect a complete set of drawings prepared upon Mylar reproducibles, showing all changes and revisions, including all change orders, bulletins and supplementary drawings to the original design. Preparation of record drawings shall be carried on by Contractor, at his own expense, as job progresses. Record drawings shall be submitted and approved before final payment for completed work will be made.

15000.07 INSURANCES

A. In addition to insurance requirements called for in the General Conditions and Supplementary General Conditions, the following insurance shall be included as part of the Contract:

B. Indemnification: The Contractor hereby agrees to hold harmless, indemnify and defend the Tenant, the Owner's agent, Architect, the Consulting Mechanical–Electrical Engineer, and the Owner's employees while acting within the scope of their duties from and against any and all liability, claims, damages, and cost of defense arising out of the Contractor's performance of the work described herein, but not including the sole negligence of the Owner, his agents or employees. The Contractor will require and any all Subcontractors to conform with the provisions of this clause prior to commencing any work and agrees to insure this clause in conformity with other insurance clauses specified elsewhere.

15000.08 SUBSTITUTIONS

A. When a product or materials is specified by name, such specification establishes the standard type and quality considered most satisfactory for a particular purpose and the proposal shall be based thereon so that all bid under the same conditions. Where more than one product manufacturer is specified, the first named product is that product on which the design concept has been based. If additional products are named as approved manufacturers, or the term "approved equal" is stated, such work is construed to mean such products are considered equal in quality. Contractor, however, shall assume any and all additional costs necessary, in his or other trades required by utilization of such product, equipment or accessories.

B. Product or material of another manufacturer of the same type, and which meets the requirements, may be submitted for consideration as a substitute under the following conditions:

1. Request for substitutions must be submitted to the Architect and Owner in writing at least ten (10) days prior to the date set for the receipt of bids.
2. Substitute items must be accompanied by full descriptive and technical data.
3. Bidders will be notified only if the proposed substitutes will be approved by the Architect and Owner prior to the receipt of bids.
4. No changes or substitutions allowed unless approved as outlined.
5. Contractor assumes the costs necessary for revisions in his and other trades due to proposed substitutions.

15000.09 SHOP DRAWINGS AND COST BREAKDOWN

A. Refer to General Conditions.

B. Number of copies, diagrams, schedules, etc., submitted must bear stamp of approval of Contractor as evidence that he has checked them, otherwise, they will be returned for checking and resubmitting.

C. No material or equipment shall be ordered or installed before approval has been obtained. Any material or equipment installed without approval may be ordered removed and replaced with approved products at the Subcontractor's expense.

D. Catalog data for equipment approved by the Engineer does not, in any case, supersede the Engineer's Contract Documents. The approval of the Engineer shall not relieve the Contractor from responsibility for deviations from drawings or specifications, unless he has in writing called the Engineer's attention to such deviations at the time of submission, nor shall it relieve him from responsibility for errors of any sort in the items submitted. The Contractor shall check the work described by the catalog data with the Engineer's Contract Documents for deviations and errors.

E. It shall be the responsibility of the Contractor to ensure that the items to be furnished fit the space available. He shall make necessary field measurements to ascertain space requirements, including those for connections, and shall order such sizes and shapes of equipment that the final installations shall suit the true intent and meaning of the drawing specifications.

F. Corrections or comments made on the shop drawings during the review period do not relieve Contractor from compliance with requirements of the drawings and specifications. This check is only for review of general conformance with the information given in the Contract Documents.

The Contractor is responsible for confirming and correlating all quantities and dimensions; selecting fabrication processes and techniques of construction; coordinating his work and that of all other trades; and performing his work in a safe and satisfactory manner.

G. Prepare and submit shop drawings, manufacturer's drawings and/or samples of all equipment, material, and accessories specified. Sections, elevations, names, sizes, catalog numbers, dimensions, materials, capacities, performance, and any details necessary for complete clarity shall be included. All dimensions and mountings shall be verified at the job site.

H. Where equipment requiring different arrangement or connections from those shown is approved, it shall be the Contractor's responsibility to install the equipment to operate properly and in harmony with the intent of the drawings and specifications, and to make all changes in work required by the different arrangement of connections. All changes shall be made at no increase in the contract amount or at additional cost to the other trades or Owner.

I. Shop drawing submittals covering several pieces of types of equipment (i.e. panelboards, lighting fixtures, temperature controls, plumbing fixtures, etc. will be treated as a unit and the entire submission will be approved or disapproved. Individual types or sections will not be acted upon separately.

15000.10 MATERIAL AND LABOR

A. All materials shall be new and of the best quality of their respective kinds; workmanship shall be in all respects of the highest grade; and all construction shall be done according to the best practice of the trade.

15000.11 STORAGE OF MATERIAL, TOOLS, ETC.

A. All work necessary to deliver, store and protect materials and equipment shall be done by Contractor and he shall provide sufficient sheds for safe storage. Location of sheds shall be as directed by the Architect or Tenant field manager.

15000.12 CUTTING AND PATCHING

A. The Contractor, or any of his Subcontractors, who requires an opening, chase or other provision for his work in the construction shall furnish full information of size and location, by drawings or in writing, to the General Construction Contractor, and in ample time for such provision to be made.

B. Should information not be sufficient, or should such information be delayed (for any reason whatsoever), the Contractor requiring such opening, chase, etc., shall coordinate the services of the General Contractor to provide for all cutting and patching to accommodate his work, and this Contractor shall bear all costs in connection thereto.

C. All floors, walls, ceilings etc., must be core–drilled and saw–cut. Particular attention must be given to the structural conditions. All cuts and drillings shall be approved by the Structural Engineer before performing such work.

D. All required patching, other than provided by the General Contractor, shall be done by the skilled trade normally associated with the type of finish and materials to be cut and patched. The Contractor shall employ the proper tradesmen necessary to perform all patching. This work shall match adjacent construction and finish as approved by the Architect.

E. The General Contractor will build into his work, sleeves for any and all items furnished and set by the Contractor.

F. Openings, chases, cutting of trusses, girders or similar structural items shall be absolutely avoided and the Contractor who provides, builds or does such work shall be held responsible for changes and for damage and repairs resulting from failure to observe this provision.

G. All drilling and patching for expansion bolts, hangers and other supports shall be done by the Contractor subject to approval of the Architect.

H. It is the responsibility of each contractor to accurately mark areas within the existing slab or structure which require cutting or core drilling. Prior to commencing this work, these areas must be visually inspected and x–rayed to determine the presence any existing mechanical, electrical, architectural and structural systems. If any systems have been identified and located precautionary measures must be taken to prevent any damage to these existing systems. If in the course of cutting and drilling these systems become damaged, it shall be the responsibility of the respective contractor to pay for all repairs and be liable for all related expenses.

15000.13 OFFSETS, TRANSITIONS, AND CHANGES IN DIRECTION

A. Offsets, transitions and changes in direction of pipes, ducts, and electrical raceways shall be made as required to maintain proper headroom and pitch of sloping lines whether or not indicated on drawings. Contractor shall install all these offsets, transitions and changes in direction at no additional cost.

15000.14 ESCUTCHEONS AND SLEEVES

A. The Contractor shall provide escutcheons on pipes and conduits wherever they pass through floors, ceilings, walls or partitions in exposed areas only.

B. Escutcheons for pipes passing through outside walls shall be solid cast brass, flat type, secured to pipe with a set screw.

C. Escutcheons for pipes passing through floors shall be split– hinged, cast brass, chromium–plated type, designed to fit on one end and cover sleeve projecting through floor on other end.

D. Escutcheons for pipes passing through interior walls, partitions and ceilings in finished areas shall be split–hinged, cast brass, chromium–plated type. Mechanical rooms, etc., shall not require escutcheons.

E. Where piping and conduit passes through interior masonry walls or partitions, concrete beams, etc., furnish and install sleeves (minimum 16 gauge steel) for passage of pipes.

15000.15 MOTORS

1. Insulated piping (as hereinafter specified) shall be run continuous through the sleeves.
2. Sleeves shall allow for full expansion of piping systems.
3. Where sleeves are installed after erection of masonry walls, masonry shall be core–drilled to receive sleeve. After sleeve has been located and set, opening between masonry and sleeve shall be grouted. If concrete has been core–drilled, sleeves may be eliminated.
4. All floor sleeves shall extend a minimum of 2 inches above finished floor.
5. All sleeves or openings shall be sealed tight with an approved fire barrier method as manufactured by 3–M; Dow–Corning, or approved equal.

F. Where waterproof or airtight sleeves are required, such as exterior walls (above or below grade), mechanical equipment room walls and floors, etc., provide sealing bushings.

1. For membrane conditions provide suitable membrane clamp adapters or fittings.
2. Sealing bushes shall be Link–Seal manufactured by Thunderline Corp., or equal Types FSK–CSM as manufactured by O.Z. Electrical Manufacturing Corp.

G. Where fire–rated and/or smoke partitions sleeves are required, and at all floor penetrations, and at walls, as shown on the architectural drawings, provide Pyro–Pac rated seals manufactured by Thunderline Corp., or equal as manufactured by Pipe Shields, Inc.

15000.16 EXISTING CONDUITS, SEWERS, PIPES, ETC.

A. Do everything necessary to protect, support, and sustain all sewers, water or gas pipes, service pipes, electric lines, power, telephone or telegraph poles, conduits, and other fixtures laid across or along the site of the work.

permanent split capacitor start and run type with built–in overload protection. The Architect, as well as the company or corporation owning said pipes, poles, or conduits, shall be notified of same before any such fixtures are removed or disturbed.

If any sewer, gas or water pipes, service pipes, electric lines, power, telephone or telegraph poles, conduits or other fixtures are damaged, they shall be repaired by the authorities having control of same. Costs for such repairs shall be borne by the respective Contractor causing this extra work.

B. Should it become necessary to change the position of temporarily remove any electric conduits, water pipes, gas pipes, or other pipes or wires so as to permit the use of a particular method of construction, or to clear the structure being built, the Contractor shall notify the Architect of the location and circumstances and working procedures shall be stopped, if necessary, to remove and/or relocate such pipes and wires after consultation with the Owner and/or Architect. The cost of changes or temporary removal shall be borne by the respective Contractor.

15000.17 SEISMIC RESTRAINTS – SUPPORTS AND FASTENINGS

A. It shall be this Contractor's responsibility to ensure that the entire installation conforms with the Seismic Restraint requirements in accordance with STATE Code, based on the Specific Seismic Zone, SMACNA Guidelines for Seismic Restraints of mechanical systems, all Local Codes, and NFPA–13 and 14 (for fire protection systems). If necessary, this Contractor shall employ services of a qualified and licensed Seismic Restraint Engineer. The cost of the entire seismic restraint design and installation shall be included in the primary contract price.

B. Support and fastening of all mechanical and electrical equipment including lighting fixtures shall be furnished by this Contractor. All equipment hung from overhead construction shall have the equipment weight distributed through the application of angle or channeled iron supports, to be approved as necessary, substantially fastened to the load bearing point of the structural support system. This arrangement must be approved by the Architect and Structural Engineer prior to commencement of construction.

Any wall mounted equipment which cannot be supported from architectural or structural materials shall have its own dependent support system furnished by this Contractor.

Proposed installation method shall be as approved by Architect.

15000.18 DAMAGED WORK

A. Each Contractor shall protect and leave in perfect condition all materials, apparatus, fittings, fixtures, and trim in the scope of his Contract. Should any items be damaged or broken, or workmanship disturbed, no matter by whom such damage is caused, the work shall be corrected and damaged items replaced with new materials at no additional cost to the Owner. Any work which needs redoing because of damage shall be done by the skilled trade which originally performed such work.

B. Neither the Owner nor the Architect and/or Consulting Engineer shall be involved in the settling of any dispute between the Contractors relative to the extent and cause of damage to work or materials.

15000.19 ACCESS DOORS

A. Access doors shall be furnished by respective Contractors, set and installed by General Construction Contractor. Access doors shall be provided for valves, cleanouts, dampers, gauges, shock chambers, pull boxes, electrical devices, and adjustment of apparatus, where necessary and required, in portions of building where equipment is concealed (ceilings, walls, floors).

B. Access doors shall be angle frame, cold rolled steel, shaped to provide a recess on four (4) sides to contain door and confine surface.

C. Access doors to be similar to Milcor as manufactured by Inland Steel Products Co., Style K for plastered wall and ceilings, Style DW for drywall, Style M for masonry and tile walls, Style AT for tile ceiling areas. A minimum size of 12"X12" access door shall be furnished. Larger sizes shall be furnished if the nature of inspection or service requires same (example – hung ceiling–mounted cabinet heater). Provide fire–rated doors where required in rated walls and ceilings.

D. Where hung ceilings consist of concealed spline–type ceiling tiles, such tiles in which equipment, valves, dampers, gauges, etc., all as described in subparagraph above, shall be identified with aluminum markers.

E. Where hung ceilings utilize an exposed grid lay–in type, such lay–in ceiling will act as access door but be identified with aluminum markers.

15000.20 IDENTIFICATION

A. Identification shall be in accordance with "Scheme for Identification of Piping System ANSI A13.1" and OSHA safety color regulation.

B. Markers shall be snap–on type as manufactured by Seton Nameplate Corp., New Haven, Conn. (Setmark System), Bunting Stamp Co. Inc., Pittsburgh, P.A. or approved equal. Markers shall completely encircle the pipe with a substantial overlap. No adhesive shall be used. They shall be manufactured of U.L. approved, self–extinguishing plastic. When the pipe including insulation (if any) is larger than six (6) inches diameter and larger, markers shall be strap–on type.

C. Provide identification for all piping and ductwork.

D. All piping (concealed or exposed) shall be stenciled with the service, size of pipes, and directional arrow of flow at the supply side of all junctions, valves, etc., and at intervals of twenty (20) feet on horizontal runs of pipe. Stenciling shall be black, except where finished coat is black, in which case aluminum shall be used. Stencil lettering shall be 1" in height. Marking pen lettering will not be accepted.

E. Sample of Stenciling: A sample of the stenciling information and arrangement is as follows:
> Service Pipe Size Direction
> Heating Hot Water Supply (HWS) 2" Directional Arrow
> Cold Water (CW) 2" Directional Arrow

15000.21 FOUNDATIONS

A. Concrete foundations shall be provided for all apparatus and machinery including, but not limited to, motors, fan equipment, boilers, pumps, compressors. Foundations shall extend at least 6" above the floors. Foundations shall be of 3,000 psi concrete. Anchor bolts and washers shall be furnished and built into the foundation with proper sized sleeves. Foundations shall be finished with beveled edges.

Foundations of compressors shall be isolated from concrete slab with corkboard of equivalent insulation devices which will preclude noise from being communicated to other parts of building beyond the room in which machinery is located. Concrete work shall conform to the same requirements as those included under Section "Concrete Work."

15000.22 NAMEPLATES

A. Provide lamacoid or approved equal nameplates on disconnect switches, motor starters, toggle switches, push button stations, PE, EP switches, and all other equipment and control devices (including pumps, fans and panelboards).

B. Sample of nameplates and schedule of locations shall be submitted for approval prior to fabrication and installation.

15000.23 PAINTING

A. Materials for painting shall be standard brands of ready–mixed paints approved by the Architect. All surfaces to be painted, whether covered or not, shall be done after testing, and prior to covering. All surfaces shall be free of dirt, rust, or other extraneous matter.

B. Related Work not in Contract: Finished painting of all exposed work, piping, electrical equipment, iron work, etc., unless specified below, is not in this Contract.

C. Piping: Piping to be painted – Before covering is applied to piping which is concealed, all ferrous pipe, fittings and hangers furnished and installed under this Contract shall be applied with one (1) coat of asphaltum or other approved heat and moisture–resistant paint.

D. Exposed pipe threads in bare or insulated piping shall be thoroughly cleaned and painted with two (2) coats of metallic paint.

E. Ductwork: Inside of all ducts for a satisfactory distance behind registers and grilles shall be painted with two (2) coats of flat black.

F. Metal surfaces of all equipment supplied without factory prime coat shall be thoroughly cleaned and painted with two (2) coats of rust–proof primer ready for finish coat.

H. All exposed ferrous metal shall be prime coated in accordance with Section 15000.23 Painting.

15000.24 DRIP PANS

A. Drip pans shall be installed under horizontal water pipes where pipe joints occur within two (2) feet, in a horizontal direction of electrical equipment and panels. Pans shall be not less than 1–1/2" deep, suitably reinforced, and rigidly supported. Drains 1/2" in size shall be run to nearest slop sink or floor drain. Material shall be of galvanized steel, sizes as approved. No piping shall be installed above electrical equipment unless specifically indicated on the drawings.

15000.25 MANUFACTURER'S REPRESENTATIVE

A. Each Contractor shall provide, at appropriate time or as directed by Architect/Engineer the services of a competent factory–trained Engineer of the particular manufacturer of equipment or item involved, so as to inspect, adjust, and place in proper operating condition any and all items of manufacturer. No additional compensation shall be allowed to Contractor for such services.

15000.26 MANUFACTURER'S INSTRUCTIONS

A. Each Contractor shall provide for each item of equipment of apparatus furnished, a complete set of printed instructions obtained from manufacturer covering operation, care, lubrication, cleaning, servicing, adjusting, etc., together with particular special safety instructions. Instruct Owner's representative who will operate equipment in all such details.

15000.27 MANUFACTURER'S DIRECTION

A. Manufacturer's directions shall be followed in all case where manufacturer furnishes directions covering points not shown in drawings and specifications.

15000.28 OPERATING MAINTENANCE AND INSTRUCTION DATA

A. Data: Submit to the Architect/Engineer for approval prior to acceptance of the installation, complete and at one time. Partial or separate data will not be accepted. Data shall consist of the following minimum submissions

1. Valve Directory: Indicating valve locations and functions for each numbered valve. Submit four (4) copies. Plumbing, Heating and Sprinkler Directories shall be separate listings.

2. Operating and Maintenance Instructions: Typewritten step–by–step operating and maintenance instructions, catalogs, data and prints covering, pumps, air conditioning equipment, automatic temperature controls, all plumbing equipment, plumbing fixtures (all accessories), electrical equipment, electrical systems, sprinkler systems.

3. The following shall also be included in these manuals: Automatic control wiring diagrams.

4. Furnish to the Owner one (1) frame chart under laminated clear plastic of each of the above; hang in Equipment Room, or as directed by Owner. Provide grommets for mounting on wall.

B. Maintenance Schedule: A list of each item of equipment requiring maintenance showing the exact type of bearing of every component of each item of equipment and the month of the year when each item of equipment should be inspected or serviced.

C. Binders: Three (3) complete sets of the above data in loose–leaf ring–type binders with permanent covers with permanent identification on back for Owner's use.

Plumbing, Sprinkler, Heating, Ventilating, Air Conditioning and Electrical data shall be in separate binders.

D. Instructions: Contractor shall instruct a representative of the Owner as to the operation of all systems. The instructions shall include the operation of the Heating, Ventilating and Air Conditioning System, Temperature Controls, Plumbing Systems, Sprinkler Systems, and Electrical Systems. Contractor shall go over the entire work with the Owner's representative showing him all locations of control valves, motors, etc., instructing him on how to lubricate, how to disconnect motors, etc.

E. Responsibility for HVAC Controls: HVAC Contractor shall bear full responsibility for proper installation and operation of all HVAC controls. He shall bear all expenses which arise due to any changes or additional (including affected work of other trades) necessary for the operation of those controls as required.

15000.29 CLEANING

A. Each Contractor shall keep the work area and its surroundings in an orderly and clean condition and shall, periodically, or when so directed by the Architect/Engineer and Owner clean up and remove from the premises all rubbish resulting from his work.

B. Before acceptance, Contractor shall thoroughly clean all fixtures, machines,, apparatus, or piping of dust, stains grease, oil paint, etc., to satisfaction of the Architect and Tenant.

Chrome–plated parts to piping shall be polished clean in an accepted manner. Marred or scratched sections or units shall be replaced with new materials.

15000.30 FINAL APPROVAL

A. Upon written approval notification by the respective Contractor that his work is completed and ready for acceptance, inspections and tests shall be performed by the Contractor as directed by, and in the presence of the Architect/Engineer. Upon failure to comply with the Contract Requirements, the respective Contractor shall at once remedy all defects and shortcomings, and perform any additional required tests at his expense.

15000.31 GUARANTEE

A. Contractor shall guarantee in writing all labor and materials for a period of one (1) year from date of substantial completion, which guarantee shall include an agreement to repair and make good or replace at his own expense any and all defects which may appear in his work, equipment, apparatus, or materials during that period, which arise from defective workmanship, imperfect or inferior materials. Repair or replacement shall mean materials erected in place.

B. When special guarantees covering installation, operation, or performance of any systems or appliances furnished under Mechanical and Electrical Contracts are herein required, full responsibility for fulfillment of such guarantees must be assumed by the Contractor, who shall obtain written guarantees in triplicate from any and all Subcontractors – two (2) copies to be filed with the Architect/Engineer before final acceptance.

15000.32 ADDITIONAL SECTIONS

A. Refer to individual sections of plumbing, heating, ventilating and air conditioning, sprinkler and electrical for all or any alternate bid proposals.

END OF GENERAL SPECIFICATIONS

1 GENERAL SPECIFICATIONS

ALBERT TAUS
& ASSOCIATES, ARCHITECTS
ALBERT TAUS, A.I.A., ARCHITECT
ARCHITECTURE·PLANNING·INTERIOR DESIGN·ENGINEERING
P H I L A D E L P H I A , P A
PHONE: (215) 698 - 2516 · FAX: (215) 698 - 7398
atausarchitects.com

THESE PLANS ARE THE PROPERTY OF ALBERT TAUS & ASSOCIATES, ARCHITECTS, AND ARE NOT TO BE USED WITHOUT THE EXPRESSED WRITTEN PERMISSION OR CONSENT OF ALBERT A. TAUS, R.A., A.I.A.

STATE OF MISSOURI
ALBERT A. TAUS
NUMBER
A-2015032715
ARCHITECT

SIGNATURE

DOCUMENTS PREPARED FOR
DDW21DOUGLAS, LLC
C/O: MR. HOSSAM SHAHIN
109 E. HALE LAKE RD
WARRENSBURG, MO 64093

ATA200602.10

DATE	04/16/21
SCALE	AS NOTED
DRAWN	
CKD	DJK
APPD	AAT

NO	DESCRIPTION	DATE
6		
5		
4		
3		
2		
1		
–	ISSUED FOR PERMIT	4–29–21

REVISIONS

PROPOSED PROJECT
DUNKIN'
WITH DRIVE THRU
1100 NE DOUGLAS STREET
LEE'S SUMMIT MO, 64086
NEXT GEN (COOL PALAETTE)
GENERAL SPECIFICATIONS

THESE PLANS ARE CONFIDENTIAL PROPERTY OF DUNKIN' BRANDS INC. UNDER RESTRICTED ACCESS.

DUNKIN' BRANDS [eatdrinkthink]

H5.1

HVAC SPECIFICATIONS

15700.01 GENERAL

A. Provisions of the General Conditions and Supplementary General Conditions, whether attached hereto or not, shall govern all work under this Section.

B. All work covered under the following HVAC specifications and contract drawings is to be provided and installed by and is to be the responsibility of the HVAC Contractor, here in referred to as the Contractor.

C. Where manufacturers' names, catalog numbers, or trade names appear in the specifications, it is not the intent to restrict or eliminate competition, but merely to establish quality of material required. Where the words "or approved equal" appear the "equal" item must conform to the requirements of the specifications and must be submitted with complete information to the Engineer for approval. It is important to note that all costs of additional work required of other trades caused by a substitution of equipment and/or materials shall be borne by the Contractor.

D. For further details of the installation requirements, refer to the Fixture Plans, Floor Plans, Plumbing Plans, Electric Plans, Air Conditioning, Heating and Ventilation Plans, manufacturer's installation instructions and all applicable codes and ordinances.

E. The Contractor shall furnish and install all required components and accessories necessary to facilitate a complete installation, including all labor required to complete the installation and perform the service covered by this specification. The Contractor is responsible for unloading, assembling, and installing all HVAC equipment and related items unless otherwise specified.

F. The Contractor shall familiarize himself with the project and shall cooperate with other Contractors doing work in the building. If any conflict, interference or discrepancies come to the attention of the Contractor, he shall notify the Architect immediately, before proceeding any further the installation.

G. No additional payment over and above the contract price will be made unless the Contractor receives a written order by the Tenant or his Representative for the additional work.

H. Prior to submitting the proposals, the Contractor shall examine all drawings, specifications, and other available estimating data, and shall become fully informed as to the extent and character of the work required, and it's relation to the other work in this project. No consideration will be given for any alleged misunderstanding of the materials to be furnished or work to be done; it shall be clearly understood that the submission of a proposal indicates a complete understanding of and agreement to all the items and conditions specified herein, or indicated on the drawings.

I. Plans and specifications are complementary to each other, any discrepancies indicated on different drawings, or between drawings and specifications, or between drawings and actual field conditions, or errors shown on either drawings or specifications shall be promptly brought to the attention of Architect for decision prior to bid submission.

15700.02 DESIGN CONDITIONS

A. Outdoor design conditions are to conform to values for the specific location as outlined in ASHRAE Handbook Fundamentals Volume, listed in Appendix A, from columns of 97-1/2 percent values for heating and 2-1/2 percent values for cooling.

15700.03 SCOPE OF WORK

A. The Contractor shall furnish all labor, materials, equipment, rigging, appliances, tools and accessories required to provide, install, connect, and test the complete heating, ventilating and air conditioning system and associated equipment in accordance with these specifications and the applicable drawings.

B. The HVAC Contractor shall give all necessary notices, obtain all permits and pay all taxes, fees and other costs in connection with his work. The Contractor shall file all necessary approvals of all departments having jurisdiction, and obtain all required certificates of inspection for his work and deliver same to the architect before request for acceptance and final payment for the work. The Contractor shall include in his scope of work, without extra cost to the Owner, all labor, materials, services, apparatus, drawings (in addition to contract drawings and documents), in order to comply with all applicable codes, laws, ordinances, rules and regulations.

All materials furnished and all work installed shall be in strict accordance with the requirements of the Tenant and all applicable codes and regulations, including but not limited to the latest applicable editions of the ASHRAE Guide and Data Book, UL, ASME, NEMA, IBR, AMCA, NEC, NFPA,IEEE,OSHA,SMACNA,INTERNATIONAL Mechanical Code, and Building Code

In addition, the Contractor shall be responsible to ensure that all HVAC work is provided and installed in strict accordance with STATE Seismic Requirement. Refer to related Mechanical Specifications, Section 15160.

Scope of work shall include, but not be limited to:

* HVAC Units
* Exhaust Fans
* Air Devices including diffusers, registers and grilles
* System Test and Balance
* Warranty for One Year

15700.04 CONTRACT DRAWINGS

A. The drawings are intended to show the general arrangement and the extent of the work to be done, however, the exact location and arrangement of all parts shall be determined as the work progresses.

B. The locations of all ducts and equipment as shown on the plans are approximately correct, but they are subject to such modifications as may be necessary at the time of installation to meet any conditions. Such changes shall be immediately reviewed with the Architect and instituted by this Contractor without extra cost.

C. The locations of all parts and equipment shall be coordinated with the work of all other trades prior to submitting shop drawings for fabrication and equipment purchase approvals.

15700.05 SHOP DRAWING REVIEWS AND APPROVALS

A. All detailed equipment cuts, shop drawings, substitutions, changes, etc. must be submitted to Architect, and Owner Representative for final review and approval prior to purchasing, fabricating or installing any portion of the HVAC contract.

B. Shop drawings must show all HVAC components with ductwork drawn in double line, at a scale of 1/4" = 1'-0". These drawings must be fully detailed, dimensioned and coordinated, indicating all other trades and disciplines.

C. Furnish to the Architect for review, six(6) copies of such equipment submittals and setting drawings or diagrams as may be required for the proper execution of the work. Provide one(1) set of reproducible sepias and two(2) sets of blueprints for all sheet metal work to Architect for use in review process

D. Contractors may make necessary adjustments to suit conditions and in order to comply with the guarantee of performance of the systems. Approvals must be obtained from the Architect before proceeding with the installation changes.

E. Approvals must also be obtained from local and state authorities, insurance underwriters, or other agencies having jurisdiction.

F. All wiring diagrams of thermostats, dampers, interlocks etc. shall be included on shop drawings or if submitted separately, six copies shall be provided prior to any installation of the HVAC contract.

G. Contractor is to submit accurate as built mylar sepia shop drawings reflecting all changes to Architect and any Owner Representative prior to request for final payment.

15700.06 DETAILS OF EQUIPMENT

A. Submit for approval six(6) copies of the manufacturer's detailed certified dimensional drawings of all equipment.

15700.07 SUBSTITUTIONS

A. As noted on the plans and described on the schedules, substitutions must satisfy all requirements and must be approved by the Architect.

15700.08 MATERIALS AND LABOR

A. All materials shall be new and must meet the standards as stipulated in the latest edition of ASHRAE Guide and Data Book.

B. Good workmanship and labor shall be performed by qualified mechanics and must comply with ASHRAE Standards.

15700.09 ORDINANCES, SERVICES, PERMITS AND FEES

A. As required for the proper installation, all work shall be provided by the Contractor in full accordance with the requirements of all local, state and national bureaus, board of fire underwriters and authorities having jurisdiction, without additional expense to the Owner.

B. Contractor shall pay for and obtain all necessary permits prior to work commencement.

C. Contractor shall prepare, at his expense, any and all shop drawings as required to obtain permits and approvals.

These documents shall be signed and sealed by a duly licensed engineer as required by the authorities having jurisdiction.

15700.10 CHASES, CUTTING, PATCHING, ETC.

A. All chases, roof openings, cutting and patching shall be the responsibility of the General Contractor. It is the responsibility of the Contractor to furnish full information regarding size and locations, and details of all required openings, chases or other provisions for this work to the General Contractor.

B. Should any cutting and patching be necessary as a result of failure to furnish such information in a timely manner, it will then be done by the General Contractor at the expense of the Contractor.

15700.11 TEMPORARY LIGHT AND POWER

A. The Electrical Contractor arranges for, installs and maintains temporary light and power as described in the Electrical Specifications.

B. It will be the duty of the Contractor to acquaint himself with the limitations of this service by the Electrical Contractor, and to plan his work accordingly.

15700.12 TEMPORARY HEAT

A. Temporary heat for construction purposes and for drying out the building shall be provided when ordered by the General Contractor and costs thereof will be the responsibility of the General Contractor.

B. Refer to the General Conditions wherein temporary heat is provided by the General Contractor at his expense.

C. The use of the permanent heating system for temporary heat is at the direction and expense of the General Contractor and shall not obligate the Tenants in any manner whatever.

15700.13 ELECTRICAL WORK

A. The Electrical Contractor shall furnish all labor and materials for power wiring and connections of all equipment and controls. The Contractor shall provide control components and wiring diagrams for all HVAC equipment to Electrical Contractor as required. The Electrical Contractor shall provide and install all control wiring, and the Contractor shall supervise its installation when requested.

B. The delivery of all control components shall be scheduled so as not to delay the project. The Contractor shall receive a signed, dated receipt of all items delivered to Electrical Contractor.

C. Disconnect switches where required, will be furnished by the HVAC Contractor unless specifically noted to be supplied by the Electrical

D. HVAC Contractor shall provide all motor starters as follows: Motors 1/2 HP and larger shall be provided with combination unfused line switch and cross-the-line magnetic starters with start-stop push buttons and pilot lights unless automatic control is required. In this case, starters are to be provided with H.O.A. selector switch and control transformer.

All motors below 1/2 HP which are not automatically controlled shall be provided with manually operated starters. All starters shall be built and rated in accordance with NEMA and AIEE standards.

All starters to include thermal overload relays and heaters properly sized to protect motor. All poly-phase motors shall be provided with phase protection.

E. The Contractor to verify all electrical power on job site prior to ordering new equipment.

F. The Contractor shall provide all smoke detectors for emergency shutdown to comply to the latest state & NFPA 90A codes.

15700.14 LABELING

A. All control devices shall be clearly labeled with plastic name plates with numbers and letters no less than 3/8" in height. A framed permanent operating wiring diagram shall be located near each system so that operation of that system is readily available at all times. Internal wiring diagram of individual relays, shall all be located in their respective boxes.

15700.15 SCHEDULING REQUIREMENTS

A. The Contractor shall perform his work in the building when and as directed, and generally in accordance with the sequence of construction and operation of the building, so as to cause the least possible inconvenience and disturbance to the other trades, Owner and occupants.

B. Consult with the General Contractor for sequence of construction prior to submitting bid. Some or all of this work may be performed in phases or on an overtime schedule.
Bid shall include all such premium time costs and shall eliminate any subsequent requests for extra compensation.

15700.16 COORDINATION

A. All work shall be coordinated with the structural, mechanical, electrical, plumbing, architectural, fire protection and lighting drawings applying to this project prior to submitting shop drawings for fabrication approval.

B. It is the responsibility of the Contractor to coordinate with all involved parties and prepare a shop drawing which will accurately locate and dimension all required roof openings, curbs and support platforms based upon approved equipment submittals.

C. All diffusers and ceiling returns shall be coordinated with lighting, speakers, sprinkler heads, etc. in field with Owner and Architect.

15700.17 RIGGING

A. The Contractor shall be responsible for the rigging, hoisting and fastening into place all equipment under this contract and shall coordinate with the General Contractor regarding the location of all equipment within, outside and on top of the building to insure proper access, safety and protection of people and building systems.

B. Where equipment must be moved over the roof, the Contractor shall be responsible for reinforcing and protecting the roof structure as required to avoid overloading. Such situations must be approved by the Architect and Structural Engineer prior to moving equipment.

15700.18 ROOF PROTECTION

A. When working on the finished roof, the Contractor must provide plywood sheets to protect roofing, and must take all precautions to avoid damaging the roof. No openings shall be cut in the roof after the roofing has been completed unless they are installed by the Roofing Contractor, paid for by the Contractor and coordinated with the General Contractor.

15700.19 BURGLAR BARS

A. All wall or roof openings 12"x12" or larger are to be equipped with burglar bars. Burglar bars are to be 5/8" round steel rods 6" on center in both directions, welded at all intersecting points. Burglar bars are to be welded in 1-1/2" x 1/4" frame welded to duct, opening, louver, etc. The Contractor must submit details for approval, during the shop drawing review.

15700.20 FLASHING & CURBS

A. All ducts passing through the roof shall be fitted with insulated curbs, flashing collars, rings or similar devices to provide weathertight protection.

B. Provide pre-fab curbs around all roof openings and flashings to make watertight openings. Include pitch collars around all openings which do not have curbs. All curbs to set on roof steel, not decking and all equipment to be set level. The Contractors shall provide tapered curbs as required.

C. Flashings and curb work shall all be installed in coordination with the work of the Roofing and General Contractors.

15700.21 FIRE RATED CONSTRUCTION

A. It is the responsibility of the Contractor to verify from the architectural plans, areas in the building which have been designated as having a fire rating and provide and install the necessary fire dampers with access doors. If any discrepancy exists between the indicated and required fire damper requirements, the Contractor shall notify the Architect prior to bid date

B. The Contractor must provide all fire rated, dampers, diffusers, grilles, registers, fire links, etc., in order to comply with all applicable codes for fire rated construction, even if not explicitly shown on drawings.

15700.22 TEST & INSPECTIONS

A. The Contractor shall perform tests and inspections to the complete duct

B. The Contractor shall make all necessary adjustments and corrections to the heating, ventilating and air conditioning systems for the purpose of equalizing the flow of air. Any dampers, deflectors or diffusers necessary to bring about this adjustment, whether specifically shown and specified or not, shall be provided by the Contractor.

C. Equipment and systems which normally operate during certain seasons of the year shall be tested during the appropriate season. Tests shall be performed on individual equipment, systems, and their respective controls.

D. Whenever the equipment or system under test is interrelated with, and depends upon the operation of other equipment, systems and controls for proper operation, the latter shall be operated simultaneously with the equipment or system being tested.

E. Air Leakage Test -- The complete air handling systems, all ventilating exhaust systems, including all conventional supply and return ductwork shall be tested. Leakage shall not exceed 5% of rated CFM at rated pressure. All the air leaks found shall be corrected within acceptable margin.

F. The Contractor shall demonstrate that all equipment and apparatus fulfills the requirements of the specifications.

G. All work provided under the contract shall operate without any objectionable noise or vibration. Should operation of any one or more of the systems produce noise, or vibration, which is in the opinion of the Architect objectionable,the Contractor shall at his own expense make changes in equipment, etc., and do all work necessary to eliminate the objectionable noise or vibration.

15700.23 OPERATING INSTRUCTIONS

A. Three copies of the operating instructions, sequence of operations and control diagrams for the heating, ventilating and air conditioning system shall be given to the Owner, together with maintenance scheduling and service data.

B. Store operators shall be fully instructed in the proper and economical operation of the systems.

15700.24 OPERATIONS

A. For the first three days after the store opening, the HVAC Contractor shall have competent mechanical personnel present to guarantee proper operation of all equipment.

B. The Contractor shall include and guarantee full maintenance and emergency call service for one year after acceptance of the installation. This shall include inspection and service at least once per month, plus the replacement of all defective parts of improper workmanship to insure continuous operating of all systems as per these specifications.

C. Maintenance shall include the monthly changing of filters for the first year.

15700.25 BALANCING

A. NEBB certified Balancing Contractor must be a company which is independent of the Contractor and be approved for use by the Architect prior to balancing the system.

B. Balance the heating and cooling systems to provide uniform temperatures in all heated or cooled areas and rooms.

C. Balance new air systems to quantities indicated and furnish to Owner a report indicating fan performance, diffuser, register and grille sizes, locations, CFM values, DX coil bypass values, outside air CFM quantities, motor HP, rated AMP, actual AMP, rated voltage, actual voltage etc..

D. The Contractor shall submit balance report prior to final acceptance.

15700.26 WARRANTY

A. The Contractor shall warranty in writing all materials and workmanship for the period of one(1) year from date of final acceptance by Owner. This shall include an agreement to repair and make good or replace at no cost to Tenant any and all defects of his work, equipment, apparatus, or materials during that period, which arise from incorrect workmanship, imperfect or inferior materials, or defective equipment. This warranty shall include replacement of all parts or basic components as required including labor.

B. All new compressors to be provided with a total of five(5) years warranty period, labor and parts for first year, and parts for remaining four(4) years.

C. When special guarantees covering installation, operation or performance of any systems or appliances furnished under the HVAC Contract are herein required, the full responsibility for fulfillment of such guarantees must be assumed by the HVAC Contractor, who shall obtain written guarantees in triplicate from any and all Subcontractors with two(2) copies to be filed with the Architect prior to final acceptance.

D. Certain equipment have been specified with stainless steel heat exchangers. If approved alternates or a design change on the specified equipment renders this option unavailable then an equivalent warranty shall be purchased with the standard heat exchanger.

15700.27 FINAL APPROVAL

A. Upon written approval notification by the Contractor that his work is completed and ready for acceptance, all required inspections and tests shall be performed by the Contractor as directed by, and in the presence of the Architect. If failure to comply with the Contract Requirements are discovered, the HVAC Contractor shall at once remedy all defects and shortcomings and perform any additional required tests at his expense.

15700.28 FILTER CHANGES

A. HVAC Contractor must not operate any HVAC units without filters installed during construction sequence.

B. Filters must be changed two(2) weeks prior to final balancing of the

C. For all HVAC systems, filters must be changed one(1) month after store opening and then once every month until the end of the first year. Refer to operations section 15700.24 for detailed maintenance of all HVAC systems.

15700.29 MISCELLANEOUS

A. The Contractor shall be responsible for removing all of his debris.

B. The Contractor shall field verify project requirements, and existing conditions prior to bid submission.

C. The Contractor shall provide sufficient fireproof tarpaulins, and cover all equipment in work area with same during work operations.

D. Do not scale from the drawings; follow written dimensions where given and field verify all dimensions where necessary.

E. Refer to contract drawings for general HVAC notes.

15700.30 SHEET METAL WORK

A. Furnish and install all sheet metal ductwork, plenums, goosenecks, and all items of metal work as necessary to complete the various air conditioning, ventilating and heating systems of the building so they are ready for satisfactory operation. While the installation should adhere to the plans and specifications as much as possible, the Contractor shall be entitled to modify the runs and sizes of the ductwork and to make offsets, where necessary to accommodate building conditions, only after receipt of written approval from the Architect. All such changes or offsets shall be in the "as-built" drawings submitted at the end of the job.

B. Ductwork shall be constructed according to the "Equipment Handbook" published by ASHRAE and "HVAC Duct Construction Standards" published by SMACNA.

C. Sheet metal gauges, transverse joints, longitudinal seams and intermediate reinforcing must be in conformance with SMACNA standards as follows:

1) Low pressure ducts per SMACNA table 2" w.g.
2) Medium pressure ducts per SMACNA table 4" w.g.
3) High pressure ducts per SMACNA table 6" w.g.

D. All rectangular ductwork shall be constructed of galvanized steel of U.S. standard sheet metal gauge unless noted otherwise on the drawings.

E. All changes in direction, horizontal or vertical, shall be shaped to permit the easiest possible air flow, using centerline radius of 1-1/2 x width. For all cases where 90 degree square elbows are used, approved double thickness turning vanes shall be used. HVAC Contractor to submit details for approval.

F. All exposed single wall round ductwork shall be constructed of galvanized sheet metal with 1" acoustical lining.

G. All ductwork shall be built with approved joints and seams smooth on the inside with laps made in the direction of the air flow and no flanges projecting into the air stream. Outside seams and joints should be as near to air tight as possible with a neat finish. The Contractor to caulk all joints which are not mechanically tight.

H. Volume dampers as shown on drawings and as required for proper operation, shall be installed in the various branches for use in balancing the system. Volume dampers shall be of multi-opposed blade construction for all ducts over 12" in depth. All volume dampers to be of the locking quadrant type with approved locking devices mounted outside of the duct in an accessible place.

I. Fire Dampers - Where ductwork pierces fire rated walls, shafts, stopping or floors type B, UL listed fire dampers should be installed. Fire dampers shall be as manufactured by Air Balance, Inc., Ruskin, or approved equal. Refer to the drawings for specific installation requirements.

J. Access doors shall be provided in the sheet metal ductwork where required for inspection, automatic control dampers, fire dampers, filters, or any other apparatus concealed behind sheet metal work. Access doors in insulated duct shall be double panel and insulated. All access doors to be secured with heavy duty window type latches, complete with gaskets and frames.

K. All ductwork to be located above the hung ceiling space unless otherwise noted.

L. All supply return, and exhaust ductwork shall be hung from the top of structural members.

15700.31 FLEXIBLE CONNECTIONS

A. The intake and discharge collars of all in-line fans, air conditioning units and heaters shall be provided with approved flexible connections to eliminate vibration in the duct work. Use 10 oz. double woven canvas connections and install in close proximity to the HVAC equipment.

15700.32 DUCT INSULATION

A. On all concealed supply and return ductwork, furnish and install Owens Corning foil faced, fiberglass ductwrap with an installed insulating value of R-5. Insulation shall be attached to sheet metal ducts by means of wire, bands or similar fastening. All joints and gaps in the applied insulation shall be filled with mastic to a thickness of the applied insulation. This shall apply to all heating and cooling ducts, unless otherwise noted on the plans.

B. Insulation shall be cut slightly longer than circumference of duct to ensure full thickness at corners. Insulation shall be adhered to duct with fire resistant adhesive, Foster 81-99 or approved equal, applied to duct in 4" wide brush strips, on 12" centers. Insulation shall be further secured with loops of #12 width gauge galvanized steel wire on 12" centers.

C. Duct insulation shall have a vapor barrier facing type FSK (.001 aluminum foil, glass scrim, Kraft) laminate, applied over the insulation. All joints shall be sealed with 2" side vapor barrier tape sealed with Foster 81-99 or equal.

D. All exposed ductwork shall be internally lined. Furnish and install not less than 1" ultra liner with a thermal efficiency of (.24). Apply to metal with adhesive and further secure with welded pins and speed washers 12" o.c. Ensure that imprinted surface faces air stream. Furthermore, install 2" wide sheet metal nosing on leading edges of liner to prevent the liner from being picked up by air flow.

15700.33 CONDENSATE CONNECTIONS

A. The Contractor to supply and install trapped condensate drips and drains to Splash blocks on roof for all roof-top equipment. Splash blocks to be provided by the Contractor and installed by Roofing Contractor.

15700.34 AIR CONDITIONING AND HEATING UNITS.

A. Furnish and install "packaged type" equipment as shown on the Schedules. Equipment to be as manufactured by Trane, Carrier or approved equal. Refer to the drawing for the unit specifications. All refrigeration system components shall be completely factory assembled and shipped fully charged on a common base. All units to be factory tested, completely wired, weather proofed for rooftop use, provided with filters and of capacities as shown on the schedules.

B. Compressors shall be accessible hermetic type, except for units under 15 H.P., with crank case heater, oil sight glass and oil charge connection. Compressors are to be spring isolator mounted. Compressors to have 5 (1 and 4) year warranty.

C. Evaporator coil shall be constructed of seamless copper tubing with rippled and corrugated aluminum fins. Coil to be fed by thermal expansion valve and orifice type distributor.
D. Supply fan to be forward curve, centrifugal design, statically and dynamically balanced for quiet operation. Bearings to be self aligning, lubricatable ball type with extended lubrication lines. Complete fan assembly shall be isolated from unit.

E. Provide differential enthalpy controlled economizers with barometric relief when specified on schedules.

F. Refrigeration cycles must be such that at 40 deg.F. ambient or above, when thermostats call for cooling, the compressor will start and remain in operation until the thermostat is satisfied. Provide two stages control of cooling with two circuit cooling coil when specified on schedules.

G. Filters shall be 1" Fiberglass Farr-Air throwaway or approved equal with media contained in a rigid frame having supporting mesh across both entering and leaving faces of the media. Refer to schedules for any special filter requirement.

H. All controls to be factory wired and enclosed in a weatherproof cabinet. Furnish as standard all motor starters and fusing for single point connection with control transformer, high pressure cut out and fan cycling head pressure control, low pressure cut out, single pump down, freezestat, oil pressure switch, and thermostats with automatic summer winter changeover.

I. Refrigeration piping shall be completely factory installed. Each circuit to have filter and sight glass, moisture indicator, and solenoid valve for 15 ton units and up.

J. All conditioned sections shall be insulated with 1- inch foil faced glass fiber.

K. Roof curbs shall be provided for all units unless structural platform above roof is provided. Curb to be minimum of 14 inches in height 12 gauge continuous galvanized steel.
Provide gaskets for mounting between unit base and curb. Curb to set directly on roof steel with required adjustments for roof pitch to provide a level unit when set. Refer to Section 15160 for Seismic Restraint requirements.

L. See HVAC drawings for exact unit specifications.

15700.35 SUPPORTS

A. All supports and hangers for equipment to be installed under this Contract, shall be provided by the Contractor.

Where excessive loading requires proper distribution of the weight, proper supports must be provided, subject to the Architect's approval. All supports shall be of structural steel.

B. No supporting members may be laid upon the completed roofing. If additional unpredicted supports are required, then they must be installed in accordance with the requirements of the Bonding Company at the expense of the Contractor.

C. Check roof-top supports which are provided by others, and make adjustments as required for the provided equipment. Verify all dimensions of supports and openings with Architect and General Contractor based upon approved submittals.

D. Interior units must be hung from the roof steel and the top chord only of steel joists using proper vibration isolators.

E. All roof openings shall be fitted with round steel bars placed 6" on centers, both ways and welded to this roof construction for burglar protections. See architectural and structural drawings for details of construction. See Section 15700.19 for further details.

15700.36 EXHAUST FANS

A. Furnish and install where shown on the plans, Penn, Greenheck, Jenn Air or equal exhaust fans of type and size as indicated. Fans shall be equipped with housings weatherstripped for wall mounting or with a base for roof mounting and flashing.

B. All fans shall be equipped with the accessories as outlined on the drawings and schedules.

C. Roof openings, if not provided in the structural framing, must be cut and framed by the Contractor.

15700.37 AIR DEVICES

A. Provide where shown on drawings and indicated on schedules, all diffusers, grilles and registers of sizes indicated. All diffusers, grilles and registers shall be manufactured by Anemostat, Barber Colman, Carnes, Titus, Tuttle and Baily or Agitair.

B. Supply registers shall be adjustable, double deflection type with opposed blade dampers.

C. Return grilles and registers shall be fixed single deflection type with opposed blade dampers.

15700.38 VIBRATION ELIMINATORS

A. Approved vibration eliminators shall be provided for all vibrating equipment including motors, compressors, air conditioning units, etc.

15700.39 CONTROLS

A. Miscellaneous Controls -- Provide smoke detectors and all necessary switches, sensors and relays to ensure a complete and operable system, in compliance with all code requirements.

B. Refer to HVAC drawings for controls to be provided for remaining and miscellaneous HVAC equipment.

END OF HVAC SPECIFICATION

1 HVAC SPECIFICATIONS

ALBERT TAUS
& ASSOCIATES, ARCHITECTS
ALBERT TAUS, A.I.A., ARCHITECT
ARCHITECTURE·PLANNING·INTERIOR DESIGN·ENGINEERING
PHILADELPHIA, PA
PHONE: (215) 698 - 2516 . FAX: (215) 698 - 7398
atausarchitects.com

THESE PLANS ARE THE PROPERTY OF ALBERT TAUS & ASSOCIATES, ARCHITECTS, AND ARE NOT TO BE USED WITHOUT THE EXPRESSED WRITTEN PERMISSION OR CONSENT OF ALBERT A. TAUS, R.A., A.I.A.

STATE OF MISSOURI
ALBERT A. TAUS
NUMBER
A-2015032715
ARCHITECT

SIGNATURE

DOCUMENTS PREPARED FOR
DDW21DOUGLAS, LLC
C/O: MR. HOSSAM SHAHIN
109 E. HALE LAKE RD
WARRENSBURG, MO 64093

ATA200602.10

DATE	04/16/21
SCALE	AS NOTED
DRAWN	
CKD	DJK
APPD	AAT

NO	DESCRIPTION	DATE
6		
5		
4		
3		
2		
1		
-	ISSUED FOR PERMIT	4-29-21

REVISIONS

THESE PLANS ARE CONFIDENTIAL PROPERTY OF DUNKIN' BRANDS INC. UNDER RESTRICTED ACCESS.

PROPOSED PROJECT
DUNKIN'
WITH DRIVE THRU
1100 NE DOUGLAS STREET
LEE'S SUMMIT MO. 64086
NEXT GEN (COOL PALAETTE)

HVAC SPECIFICATIONS

DUNKIN' BRANDS
[eatdrinkthink]

H6.1

DIVISION 16 – ELECTRICAL SPECIFICATIONS

PART 1. GENERAL PROVISIONS

1. SCOPE: PROVIDE ALL LABOR, MATERIAL, AND EQUIPMENT IN ACCORDANCE WITH THESE SPECIFICATIONS, AND THE ACCOMPANYING DRAWINGS TO PROVIDE A COMPLETE AND PROPERLY OPERATING ELECTRICAL SYSTEM FOR THE BUILDING.

   1.A. THE CONTRACTOR SHALL FURNISH AND INSTALL ALL OF THE FOLLOWING MATERIAL AND EQUIPMENT UNDER THIS DIVISION OF THE SPECIFICATIONS, UNLESS NOTED OTHERWISE: PANEL BOARDS; LIGHTING FIXTURES, INCLUDING POLES AND POLE BASES; LAMPS RACEWAYS; 600 VOLT WIRE AND CABLE; WIRING DEVICES; DEVICE PLATES; DEVICE, PULL, AND JUNCTION BOXES; SAFETY SWITCHES; MOTOR STARTERS; LIGHTING CONTROLS; CIRCUIT BREAKERS; FUSES; TIME BLOCKS; EQUIPMENT IDENTIFICATION (NAMEPLATES AND DIRECTORIES); WIRE AND CABLE TERMINATIONS; CONNECTIONS TO INDIVIDUAL UNITS OF EQUIPMENT FOR THE WALK–IN FREEZERS AND COOLERS; AND TEMPORARY POWER.

   1.B. THE FOLLOWING MATERIAL AND EQUIPMENT WILL BE FURNISHED AND/OR INSTALLED BY OTHERS, OR UNDER OTHER DIVISIONS OF THE SPECIFICATION, UNLESS NOTED OTHERWISE: LOW VOLTAGE (24 VOLT) WIRE AND CABLE, COMMUNICATION DEVICES, SECURITY EQUIPMENT, POINT OF SALES (POS) EQUIPMENT.

2. GENERAL REQUIREMENTS: ALL WORK SHALL BE PERFORMED BY SKILLED LICENSED ELECTRICIANS IN ACCORDANCE WITH THE BEST PRACTICES OF THE TRADE, MEETING THE REQUIREMENTS OF THE LATEST EDITION OF THE NATIONAL ELECTRICAL CODE, APPLICABLE FEDERAL, STATE AND LOCAL CODES, AND THE REQUIREMENTS OF THE ELECTRICAL UTILITY COMPANY FURNISHING THE SERVICES. ALL NECESSARY CONSTRUCTION PERMITS AND CERTIFICATIONS OF INSPECTION SHALL BE PURCHASED AND OBTAINED UNDER THIS CONTRACT.

   2.A. COORDINATION: ALL OUTLETS MUST BE ACCURATELY LOCATED, PARTICULARLY APPLIANCE OUTLETS WHICH SHALL BE LOCATED FROM THE DIMENSIONS GIVEN ON THE DRAWING AND FIELD VERIFIED. REVIEW THE ARCHITECTURAL, PLUMBING AND HEATING AND VENTILATION PLANS IN ORDER TO COORDINATE THIS WORK WITH OTHER TRADES, AND COOPERATE WITH THEM IN THE ENTIRE INSTALLATION.

3. SERVICE VOLTAGE: THESE DRAWINGS ARE FOR A METERED, UNDERGROUND BUILDING SERVICE OF 120/208 VOLT, THREE PHASE, FOUR WIRE, 60 HERTZ. ALL KITCHEN AND AIR CONDITIONING EQUIPMENT HAS BEEN DESIGNED AND PURCHASED FOR USE OF THIS ELECTRICAL SYSTEM. THE CONTRACTOR SHALL CONTACT THE ELECTRICAL UTILITY AND VERIFY ALL OF THE ABOVE SERVICE CHARACTERISTICS, AND THE AVAILABLE FAULT CURRENT.

4. SERVICE EQUIPMENT: THE SERVICE SHALL BE LOCATED AS SHOWN ON THE SITE PLAN, OR AS INDICATED IN THE INSTRUCTIONS TO BIDDERS. UTILITY POLES, PADS FOR UTILITY TRANSFORMERS, CURRENT TRANSFORMER ENCLOSURES, METERING EQUIPMENT, SERVICE MASTS, AND OTHER RELATED MATERIALS AND EQUIPMENT SHALL BE APPROVED, FURNISHED, AND INSTALLED AS REQUIRED. INCLUDE THE COST OF ALL THE ABOVE ITEMS, SERVICE CONNECTIONS, AND METER CHARGES IN THE BASE BID. MAIN SERVICE SWITCHES AND CURRENT TRANSFORMER CABINETS SHALL BE INCLUDED IN THE BASE BID. UNLESS NOTED OTHERWISE, A MAIN SERVICE SWITCH WITH CURRENT LIMITING FUSES MAY BE USED WHEN THE AVAILABLE FAULT CURRENT (AFC) IS EXCESSIVE, IN ORDER TO USE STOCK PANELBOARDS, WITH 10K OR 22K AIC RATINGS.

PART II. MATERIALS

1. MATERIALS: ALL MATERIAL SHALL BE NEW AND OF QUALITY INDICATED BY THE SPECIFIED BRAND NAMES. SUBSTITUTIONS OF MATERIAL OF EQUAL QUALITY BY OTHER MAJOR MANUFACTURES OF COMMERCIAL EQUIPMENT MAY BE ACCEPTABLE PROVIDED A LIST OF SUCH SUBSTITUTIONS IS APPROVED IN WRITING BY ARCHITECTURE AND ENGINEERING DEPARTMENT. THE CONTRACTOR SHALL SUBMIT A SUBSTITUTION LIST IN TRIPLICATE AT LEAST FIVE DAYS PRIOR TO THE BID OPENING.

   1.A. PANELBOARDS: PANELBOARDS SHALL BE BOLT–IN CIRCUIT BREAKER TYPE, AS SHOWN ON THE PLANS. PANELS SHALL BE OF PANELBOARD CONSTRUCTION, 20 INCHES WIDE (MINIMUM), 5–3/4" TO 6–1/2" DEEP, UL LISTED, AND MEET UL 67, UL 50, AND FEDERAL SPECIFICATION W–P–115B AS TYPE 1, CLASS 1, WITH BOLT–ON CIRCUIT BREAKERS, COPPER BUS BARS, NEUTRAL BUS, GROUND BUS, AND A HINGED LOCKABLE DOOR. CABINETS SHALL BE CODE GAUGE, GALVANIZED STEEL, MOUNTED AS SHOWN. PROVIDE TYPEWRITTEN CIRCUIT DIRECTORIES WITH CLEAR PLASTIC PROTECTORS IN ALL PANELS. ALL WIRES SHALL BE TAGGED WITH PANEL AND CIRCUIT NUMBERS. PANEL "MP" SHALL BE UL LISTED AND LABELED AS SUITABLE FOR USE AS SERVICE ENTRANCE EQUIPMENT. APPROVED MANUFACTURES OF PANELS ARE SQUARE D/TELEMECHANIQUE, CULTER–HAMMER, GENERAL ELECTRIC, WESTINGHOUSE, CHALLENGER, AND SIEMENS (I–T–E).

   1.B. LIGHTING FIXTURES: ALL LIGHTING SHALL BE UL LISTED, COMMERCIAL QUALITY. REFER TO NATIONAL ACCOUNT SCHEDULE.

   1.C. LAMPS: ALL NEW FLUORESCENT LAMPS (F40T8) SHALL BE COOL WHITE, OR COLOR IMPROVED COOL WHITE, WITH A 4100 DEGREE K COLOR TEMPERATURE, 2950 MIN INITIAL LUMENS, 20,000 HOURS RATED LIFE, AND 62 MIN CRI, UNLESS NOTED OTHERWISE.

   1.D. WIRING DEVICES: ALL WIRING DEVICES SHALL BE UL LISTED, COMMERCIAL SPECIFICATION GRADE. SWITCHES SHALL BE RATED 20 AMPS AT 120/277 VOLTS, AC. STANDARD RECEPTACLES SHALL BE 20 AMP, DUPLEX, GROUNDING TYPE, IN NEMA CONFIGURATIONS, UNLESS NOTED OTHERWISE. SWITCHES IN THE SAME LOCATION SHALL BE GANGED BEHIND A SINGLE PLATE. DEVICES PLATES IN THE KITCHEN AREA SHALL BE METAL, ALUMINUM OR STAINLESS STEEL. DEVICE PLATES IN THE DINING AREA SHALL BE THERMOPLASTIC PLASTIC (NYLON) OR METAL, COLOR AS APPROVED BY THE ARCHITECT OR OWNER. APPROVED MANUFACTURES OF SWITCHES AND RECEPTACLES ARE HUBBELL, ARROW HART, BRYANT, LEVITON, PASS & SEYMOUR, GENERAL ELECTRIC, SLATER, OR EQUAL

      1.D.A. SWITCHES:
      1.D.A.A. SINGLE POLE: HUBBELL HBL1221–I, OR EQUAL.
      1.D.A.B. THREE WAY: HUBBELL HBL1223–I, OR EQUAL.

      1.D.B. RECEPTACLES:
      1.D.B.A. NEMA 5–20R: HUBBELL 5362I, OR EQUAL
      1.D.B.B. NE,A 5–20R–IG: HUBBELL IG–5362, OR EQUAL.
      1.D.B.C. NEMA 5–20R–IG/SS: HUBBELL IG–5362–OS, OR EQUAL.
      1.D.B.D. NEMA 5–20R–GFCI: HUBBELL GF5362–I, OR EQUAL
      1.D.B.E. NEMA 6–20R: HUBBELL 5462–I, OR EQUAL.
      1.D.B.F. OTHERS: COMMERCIAL OR INDUSTRIAL GRADE, UL LISTED, FEDERAL SPECIFICATION WC596F.

      1.D.C. WP PLATES: WEATHERPROOF COVERS ARE PERMITTED UNDER NEC ARTICLE 406.8(B)(I).

2. NATIONAL ACCOUNT: REFER TO NATIONAL ACCOUNT DIRECTORY. THE FOLLOWING EQUIPMENT MAY BE AVAILABLE: MAIN SERVICE PANELBOARD WITH BREAKERS INSTALLED, LIGHTING AND DISTRIBUTION PANELBOARDS WITH BREAKERS INSTALLED, ROOF–TOP DISCONNECTS FOR HVAC UNITS AND KITCHEN HOOD FANS, LIGHTING CONTRACTOR PANEL, AND SHUNT TRIP SYSTEMS (IF REQUIRED PER LOCAL CODE).

3. EXCAVATIONS: PERFORM ALL NECESSARY EXCAVATING AND BACK–FILLING REQUIRED FOR THIS INSTALLATION. ALL EXCAVATIONS BELOW THE BOTTOM OF FOOTINGS SHALL BE BACKFILLED WITH 3,000 PSI CONCRETE. WHERE DITCHES ARE CUT FOR OUTSIDE RUNS OF CONDUIT, REPLACE AND TAMP THE EARTH IN 12" LAYERS AND LEAVE THE GROUND LEVEL AND EQUAL TO ITS ORIGINAL CONDITION.

4. CONDUIT AND FITTINGS: CONDUIT PERMITTED: (A) RIGID GALVANIZED STEEL (RGS), (B) EMT, (C) PVC, AND (D) ENT. TYPES UTILIZED SHALL BE RUN ONLY AS PERMITTED PER CODE. ALL WIRING SHALL BE RUN IN CONDUIT. CONDUIT PLACED IN CONCRETE OR RUN UNDERGROUND SHALL BE RIGID GALVANIZED CONDUIT OR PVC. IF PVC IS USED, ALL ELBOWS, SWEEPS AND STUB–UPS SHALL BE RGS. CONDUIT EXPOSED OR RUN IN MASONRY WALLS ABOVE GRADE MAY BE PVC OR EMT WHERE ALLOWED BY LOCAL CODES. IF EMT IS NOT PERMITTED, RIGID SCREWED GALVANIZED PIPE CONDUIT AND FITTINGS SHALL BE USED. IF SHIELDING CABLE IS REQUIRED FOR CONTROL CIRCUITRY, IT SHALL BE TAN, GRAY OR ANY NEUTRAL COLOR OTHER THAN THAT AS SPECIFIED FOR POWER DISTRIBUTION. NO CONDUIT SMALLER THAN 3/4" SHALL BE INSTALLED EXPECT FOR TWO–WIRE SWITCH LEGS. ALL CONDUIT BENDS SHALL BE FREE FROM DENTS AND KINKS. ALL CONDUITS SHALL BE ELECTRICAL CONTINUOUS FROM THE SERVICE EQUIPMENT TO ALL OUTLETS, AND SHALL BE SECURED TO ALL METAL BOXES WITH ONE LOCK NUT OUTSIDE, AND ONE INSIDE THE BOX WITH A REINFORCED BAKELITE BUSHING. IF PVC, OR ENT, IS USED, THEN APPROPRIATE SIZED, ELECTRICALLY CONTINUOUS, BOND WIRES SHALL BE RUN FROM THE SERVICE EQUIPMENT TO ALL OUTLETS, AND SHALL BE SECURED TO EACH WIRING DEVICE PER THE NATIONAL ELECTRICAL CODE. WHERE CONNECTIONS ARE TO BE MADE BETWEEN CONDUIT TERMINATIONS AND MOTORS, EQUIPMENT, OR APPARATUS NECESSITATING FLEXIBLE CONNECTIONS, APPROVED FLEXIBLE CONDUIT SHALL BE USED. OUTDOOR CONNECTIONS TO FANS, HVAC UNITS, OR ROTATING EQUIPMENT SHALL BE MADE WITH HELICAL WOUND, LIQUIDTIGHT, FLEXIBLE STEEL CONDUIT. EXPOSED CONDUIT SHALL BE SUITABLY SUPPORTED AT INTERVALS NOT TO EXCEED FIVE (5) FEET. DURING CONSTRUCTION, CONDUIT SHALL BE KEPT FREE OF ALL FOREIGN MATTER BY USE OF CAPPED BUSHING ON ALL TURNED UP ENDS. PAPER OR WOOD PLUGS ARE NOT ACCEPTABLE FOR THIS PURPOSE.

5. WIRE AND CABLES: ALL WIRE AND CABLES SHALL BE UNDERWRITERS LABORATORIES' LISTED, AND LABELED, AND CONFORM WITH APPLICABLE STANDARDS OF UL (44, AND 83), NEMA (WC–5, AND WC–7), IPCEA (S–61–402, AND S–66–524), FEDERAL SPECIFICATIONS (J–C–30A(1), AND HH–I–595C), ANSI, AND OTHER APPLICABLE INDUSTRY STANDARDS. CONNECTORS AND LUGS SHALL MEET UL PUBLICATION 486. ALL BRANCH CIRCUIT WIRING SHALL BE 600 VOLT, COPPER 75 DEGREE C (MIN), TYPE THHN/THWN WITH A MINIMUM SIZE OF #12 AWG, UNLESS NOTED OTHERWISE. WIRE SIZE OF #8 AWG AND LARGER SHALL BE STRANDED. SERVICE AND FEEDER CABLES SHALL BE 600 VOLT, STRANDED COPPER, 75 DEGREE C (MIN), TPE XHHW. ALL CIRCUITS SHALL HAVE A SEPARATE GROUND CONDUCTOR. PROVIDE GREEN–INSULATED GROUND WIRE IN ALL RACEWAYS, CABLE ASSEMBLIES, AND WHERE NOTED. SIZE EQUIPMENT GROUNDS PER TABLE 250–122 OF THE NATIONAL CODE. INSULATION COLOR CODES SHALL BE BLACK, RED, AND BLUE (PHASE), WHITE (NEUTRAL), AND GREEN (GROUND).

   5.A. ALL WIRING SHALL BE INSTALLED IN CONDUIT, EXPECT WHERE SPECIFICALLY SHOWN ON THE DRAWINGS. NON–METALLIC SHEATHED (TYPE NM) CABLE IS NOT PERMITTED.

   5.B. ALL BRANCH CIRCUIT, COMMUNICATION, SIGNALING, AND CONTROL WIRING TO KITCHEN, FIRE PROTECTION AND OTHER EQUIPMENT SHALL BE ROUTED ABOVE THE CEILING. VERIFY WHETHER OR NOT THE SPACE ABOVE THE CEILING IS USED AS A SPACE FOR RETURN AIR FOR THE ENVIRONMENTAL AIR SYSTEM. IF IT IS USED FOR RETURN AIR, PROVIDE APPROVED RACEWAYS FOR ALL OVERHEAD WIRING PER NEC ARTICLE 300–22(B). IF IT IS NOT "OTHER SPACE USED FOR ENVIRONMENTAL AIR", APPROVED LOW VOLTAGE CABLES MEETING THE REQUIREMENTS OF NEC ARTICLES 725 AND 760 MA BE RUN WITHOUT RACEWAYS, UNO. ALL SAFETY CONTROL WIRING FOR FIRE PROTECTION SYSTEMS, SHUNT TRIPS, ETC. SHALL BE RUN IN A RACEWAY IN ACCORDANCE WITH NEC ARTICLES 725.25 AND 725.28.

6. SITE LIGHTING: THE G.C. WILL FURNISH THE SITE LIGHTING PACKAGE, AS REQUIRED FOR THE SPECIFIC LOCATION. UNDER THIS SPECIFICATION SECTION, PROVIDE 1" RIGID GALVANIZED STEEL ELECTRICAL CONDUIT, AND THE REQUIRED WIRING FROM THE PANEL TO THE POLE. SET FIXTURES AND PILES ON CONCRETE BASED AS PROVIDED UNDER SPECIFICATION SECTION 3A: CONCRETE GROUND/BOND ALL SITE LIGHTING FIXTURES/POLES PER THE NEC. THE BRANCH CIRCUIT CONDUCTORS SHALL BE INCREASED FROM #10 AWG TO #8 AWG IF THE HORIZONTAL DISTANCE FROM THE PANEL TO THE POLE IS GREATER THAN EIGHTY (80) FEET. ALL SITE LIGHTING SHALL BE CONTROLLED THROUGH THE LIGHTING CONTROL SYSTEM SHOWN ON THE DRAWINGS. REFER TO THE SITE PLAN FOR QUANTITY AND LOCATION OF ALL SITE LIGHTING. SET FIXTURES AS SPECIFIED, AND AIM AFTER DARK FOR UNIFORM LIGHT DISTRIBUTION.

7. SIGNAGE LIGHTING: PROVIDE A 1" RIGID GALVANIZED STEEL ELECTRICAL CONDUIT, AND WIRING, FROM THE PANEL TO ALL ILLUMINATED SIGNS AS SHOWN ON THE LIGHTING AND SITE PLANS. GROUND/BOND EACH SIGN. SIGNS WILL BE FURNISHED AND INSTALLED BY THE OWNER, OR UNDER A SEPARATE CONTRACT, UNO. POWER AND WIRING SHALL BE FURNISHED AND INSTALLED UNDER THIS SECTION OF THE SPECIFICATIONS.

8. OTHER WRING:

   8.A. FURNISH AND INSTALL ALL POWER WIRING AND CONDUIT AS INDICATED ON THE DRAWINGS FOR ROOF–TOP HVAC EQUIPMENT, KITCHEN HOOD FANS, AND WALK–IN FREEZER AND COOLER EQUIPMENT. DISCONNECT SWITCHES, AVAILABLE FROM THE NATIONAL ACCOUNT, SHALL BE FURNISHED AND INSTALLED FOR EACH UNIT OF HVAC EQUIPMENT, AND FOR KITCHEN EQUIPMENT WITHOUT A CORD AND PLUG. BEFORE ENERGIZING ANY EQUIPMENT, VERIFY THAT THE CORRECT POWER SUPPLY VOLTAGE, AMPACITY, AND PHASING HAS BEEN PROVIDED A THE LOAD SIDE OF THE DISCONNECT.

   8.B. FURNISH AND INSTALL THE LIGHTING CONTRACTOR PANEL, AND ALL ASSOCIATED POWER WIRING, AS INDICATED. THE LIGHTING CONTRACTOR PANEL IS CUSTOM BUILT, AND AVAILABLE FROM THE NATIONAL ACCOUNT.

9. EMPTY CONDUIT: LEAVE A #12 AWG PULL WIRE IN ALL EMPTY CONDUITS.

10. BOXES AND WIREWAYS: ALL JUNCTION BOXES, PULL BOXES, WIREWAYS, ETC, SHALL BE SIZED IN ACCORDANCE WITH THE NATIONAL ELECTRICAL CODE.

11. EQUIPMENT IDENTIFICATION: PROVIDE NAMEPLATES FOR ALL PANELBOARDS, CONTROLS, AND OTHER ELECTRICAL EQUIPMENT. EQUIPMENT VISIBLE TO THE PUBLIC SHALL BE IDENTIFIED WITH ENGRAVED LAMINATED NAMEPLATES ATTACHED WITH STAINLESS STEEL FASTENERS. ELECTRICAL EQUIPMENT NOT VISIBLE TO THE PUBLIC MAY BE NEATLY IDENTIFIED WITH BLACK PERMANENT MARKERS.

PART III: EXECUTION

1. TESTS: MAKE ALL TESTS NECESSARY TO ENSURE THAT THE ENTIRE INSTALLATION IS FREE FROM IMPROPER GROUNDS, AND FROM SHORTED AND/OR OPEN CONDUCTORS. VOLTAGE, CURRENT, AND ROTATION TESTS SHALL BE MADE BEFORE ANY MOTORS ARE PLACED IN OPERATION. ALL LOADS SHALL BE BALANCED ACROSS PHASES. CHECK TO SEE THAT ALL LIGHTS WORK, AND ARE CONTROLLED BY SWITCHES INDICATED ON DRAWINGS, OR CIRCUIT BREAKERS SO INDICATED ON PANEL SCHEDULE.

2. GUARANTEE: FURNISH A GUARANTEE IN WRITING TO THE OWNER THAT ALL WORK EXECUTED UNDER THIS SECTION IS FREE FROM DEFECTS OF MATERIALS AND WORKMANSHIP FOR A PERIOD OF ONE (1) YEAR FROM DATE OF FINAL ACCEPTANCE. IN ADDITION, DURING THE TERM OF THIS GUARANTEE, THE REPAIR AND/OR REPLACEMENT OF ANY DEFECTIVE WORK, AND ALL RESULTING DAMAGE SHALL BE MADE AT NO ADDITIONAL EXPENSE TO THE OWNER.

3. TEMPORARY POWER: AT THE PROJECT SITE, PROVIDE A 100 AMP, 120/208 VOLT, SINGLE PHASE, SERVICE WITH POWER OUTLETS ADEQUATE FOR TEMPORARY CONSTRUCTION POWER. TEMPORARY LIGHTING SHALL BE MAINTAINED IN ALL AREAS OF THE BUILDING UNTIL PERMANENT POWER SOURCES HAVE BEEN ENERGIZED. TEMPORARY SERVICE SHALL BE PROVIDED UNDER SECTION 1A OF THESE SPECIFICATIONS.

4. CLEAN–UP: LEAVE THE ELECTRICAL PORTION OF THE WORK IN A CLEAN AND FINISHED CONDITION.

5. SHOP DRAWINGS: PROVIDE SHOP DRAWINGS FOR THE FOLLOWING ITEMS: PANELBOARDS, LIGHTING FIXTURES.

6. AS–BUILT DRAWINGS: MAINTAIN AS–BUILT DRAWINGS, UPDATED DAILY DURING CONSTRUCTION, AND PRESENT THE OWNER WITH ONE SET UPON COMPLETION. PROVIDE THE OWNER'S PERSONNEL WITH ON–SITE INSTRUCTION IN THE OPERATION AND MAINTENANCE OF THE COMPLETED ELECTRICAL SYSTEM.

THE END.

1 GENERAL REQUIREMENTS FOR ELECTRICAL WORK

- 2' X 4' FLOURESCENT LIGHTING FIXTURE
- 2' X 2' FLOURESCENT LIGHTING FIXTURE
- 1' X 4' FLOURESCENT LIGHTING FIXTURE
- FLOURESCENT STRIP LIGHT
- CHAIN HUNG LIGHTING FIXTURE
- WALL SCONCE
- DOWNLIGHT
- ILLUMINATED EXIT SIGN
- REMOTE EMERGENCY LIGHTS
- EMERGENCY WALL PACK
- WALL SWITCH
- 3–WAY WALL SWITCH
- 4–WAY WALL SWITCH
- PILOT SWITCH (ATTIC LIGHTS)
- DIMMER SWITCH
- (switches: 54" ℄)
- DUPLEX RECEPTACLE
- GFCI DUPLEX RECEPTACLE
- (receptacles: 18" ℄)
- SPECIAL RECEPTACLE
- FF DENOTES FLUSH FLOOR
- WP DENOTES WEATHER–PROOF
- CABLE/TV OUTLET
- JUNCTION BOX
- FIRE ALARM HORN & STROBE
- WALL MTD FIRE ALARM PULL STATION
- ELECTRICAL DISCONNECT
- COMBINATION STARTER/DISCONNECT
- FIRE ALARM STROBE
- PHOTOELECTRIC SMOKE DETECTOR
- THERMAL DETECTOR
- TELEPHONE OUTLET
- DATA OUTLET
- TELE/DATA OUTLET
- MTD 48" OR ABOVE COUNTER
- SINGLE– TO THREE–PHASE CHANGER WITH HORSEPOWER AS INDICATED
- INTERCOM UNIT STATION W/DOOR RELEASE
- INTERCOM MASTER STATION
- PHOTOCELL
- HVAC DUCT SMOKE DETECTOR
- A2PO 2x2 LAY–IN LIGHT FIXTURE W/ OVERLAY (TYP.)
- A1PO 2x4 LAY–IN LIGHT FIXTURE W/ OVERLAY (TYP.)
- A1 2x4 LAY–IN LIGHT FIXTURE W/ ACRYLIC LENS (TYP.)
- 2x4 SURFACE MOUNTED LIGHT FIXTURE
- B RECESSED CAN LIGHT
- C HALOGEN TRACK +HD
- C8,C12,C16,C24 SURFACE MTD. WALL–WASH LIGHT FIXTURE
- SP, SP1 PENDANT LIGHT FIXTURE
- WP EXTERIOR DECORATIVE WALL PACK LIGHT
- WSC–1 EXTERIOR UP / DOWN SCONCE LIGHT
- WSCX–1 EXTERIOR GOOSENECK LIGHT
- WSCX–2 EXTERIOR WALL MOUNT STEM LIGHT
- EX EXISTING RECESSED LIGHT FIXTURE
- K DOWN LIGHT
- SP SPEAKER (BY MUSIC VENDOR)
- E EXTERIOR DOWN LIGHT
- SURE–LITE #DDCCX–70RWH POLYCARBONATE EXIT LIGHT WITH RED LETTERS AND WHITE FACE LED LAMPS WITH (2) LAMP ADJUSTABLE HEAD EMERGENCY LIGHT WITH SEALED LEAD CALCIUM BATTERY.(WITH REMOTE HEAD AS SHOWN)
- SURE–LITE #DDCC2–V (2) LAMP ADJUSTABLE HEAD EMERGENCY LIGHT WITH SEALED LEAD CALCIUM BATTERY. <u>(E) INDICATED EXISTING EMERGENCY LIGHT TO REMAIN. SEE PLAN.</u>
- EMERGENCY REMOTE HEAD.
- G EXTERIOR WALL PACK LIGHT
- M VAPOR PROOF 100 W LIGHT FIXTURE PROVIDED WITH "PACKAGE COOLER UNIT"/ALL WIRING BY ELECTRICAL CONTRACTOR
- JUNCTION BOX
- SWITCH
- SWITCH (2 WAY)
- TIME CLOCK ON OFF.
- DUSK TO DAWN TIMER.

NOT ALL SYMBOLS APPLY TO THIS PROJECT

2 ELECTRICAL LEGEND

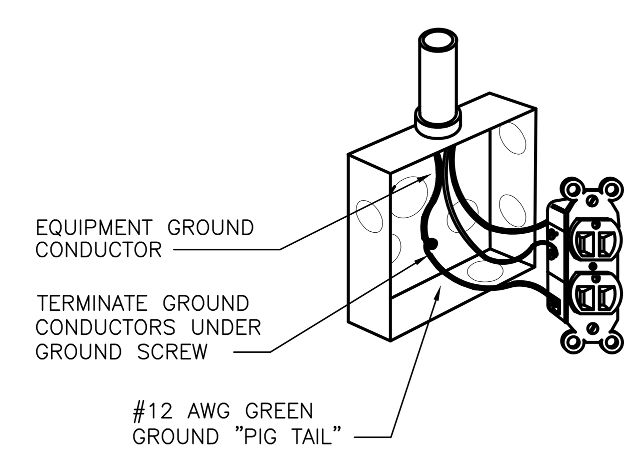

3 RECEPTACLE MOUNTING DETAIL — SCALE: NONE

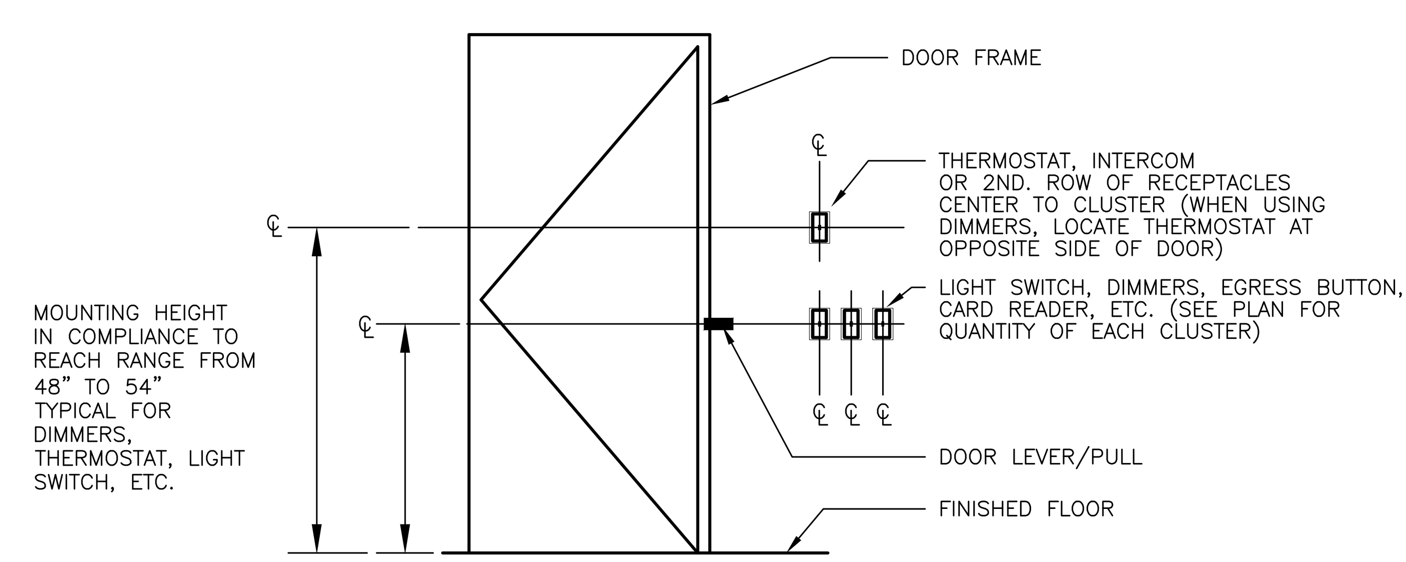

4 TYPICAL LOCATION FOR LIGHT SWITCHES — SCALE: NONE

ALL CONSTRUCTION WORK SHALL BE PERFORMED IN ACCORDANCE WITH THE STATE CONSTRUCTION CODE AND OTHER NATIONAL AND STATE CODES

SHOULD CONFLICT BETWEEN CODES OR REFERENCES AND THE CONTRACT DRAWINGS OR SPECIFICATIONS BE OBSERVED BY THE CONTRACTOR, THE CODE OR REFERENCE SHALL BE REFERRED TO THE ENGINEER AND A WRITTEN OPINION BY THE ENGINEER SHALL BE OBTAINED.

<u>GOVERNING CODES & REFERENCES:</u>

2017 NATIONAL ELECTRICAL CODE (NEC).

5 CODES AND REGULATION INFORMATION

DWG #	DRAWING TITLE
E1.1	ELECTRICAL OVERVIEW
E1.2	ELECTRICAL NOTES & DETAILS
E2.1	ELECTRICAL POWER PLAN & DETAILS
E2.2	ELECTRICAL HVAC POWER PLAN & DETAILS
E3.1	ELECTRICAL COMMUNICATION PLAN & DETAILS
E3.2	ELECTRICAL COMMUNICATION SCHEDULES & NOTES
E4.1	ELECTRICAL LIGHTING PLAN & DETAILS
E5.1	ELECTRICAL PANEL SCHEDULES & RISER DIAGRAM
E6.1	ELECTRICAL SPECIFICATIONS

6 DRAWING INDEX

ALBERT TAUS & ASSOCIATES, ARCHITECTS
ALBERT TAUS, A.I.A., ARCHITECT
ARCHITECTURE·PLANNING·INTERIOR DESIGN·ENGINEERING
P H I L A D E L P H I A, P A
PHONE: (215) 698 - 2516 . FAX: (215) 698 - 7398
atausarchitects.com

THESE PLANS ARE THE PROPERTY OF ALBERT TAUS & ASSOCIATES, ARCHITECTS, AND ARE NOT TO BE USED WITHOUT THE EXPRESSED WRITTEN PERMISSION OR CONSENT OF ALBERT A. TAUS, R.A., A.I.A.

STATE OF MISSOURI · ALBERT A. TAUS · NUMBER A-2015032715 · ARCHITECT

SIGNATURE

DOCUMENTS PREPARED FOR
DDW21DOUGLAS, LLC
C/O: MR. HOSSAM SHAHIN
109 E. HALE LAKE RD
WARRENSBURG, MO 64093

ATA200602.10

DATE	04/16/21
SCALE	AS NOTED
DRAWN	
CKD	DJK
APPD	AAT

NO	DESCRIPTION	DATE
6		
5		
4		
3		
2		
1		
–	ISSUED FOR PERMIT	4–29–21

REVISIONS

THESE PLANS ARE CONFIDENTIAL PROPERTY OF DUNKIN' BRANDS INC. UNDER RESTRICTED ACCESS.

PROPOSED PROJECT
DUNKIN'
WITH DRIVE THRU
1100 NE DOUGLAS STREET
LEE'S SUMMIT MO, 64086
NEXT GEN (COOL PALAETTE)

ELECTRICAL OVERVIEW

DUNKIN' BRANDS [eatdrinkthink]

E1.1

GENERAL REQUIREMENTS FOR ELECTRICAL WORK

1. THE ELECTRICAL CONTRACTOR SHALL VISIT THE SITE AND INSPECT THE PREMISES IN ORDER TO FAMILIARIZE HIMSELF WITH THE EXISTING CONDITIONS WHICH MAY IN ANY WAY AFFECT THE INSTALLATION OF THE WORK SPECIFIED HEREIN. NO ADDITIONAL COMPENSATION WILL BE ALLOWED FOR THE CONTRACTOR'S FAILURE TO COMPLY HEREWITH.
2. COORDINATE WORK WITH ALL OTHER TRADES AFFECTING, OR EFFECTED BY, WORK OF THIS SECTION, COOPERATE WITH SUCH TRADES TO ASSURE THE STEADY PROGRESS OF ALL WORK UNDER THIS CONTRACT.
3. ALL WORK SHALL COMPLY WITH APPLICABLE CODES, ORDINANCES RULES REGULATION, AND LAWS OF LOCAL, MUNICIPAL OR STATE AUTHORITIES HAVING JURISDICTION.
4. PROCURE AND PAY ALL PERMITS, INSPECTION FEES AND LICENSES REQUIRED FOR WORK UNDER THIS SECTION.
5. ALL EQUIPMENT AND MATERIALS INSTALLED ON THIS PROJECT AS WELL AS THE COMPLETE ELECTRICAL INSTALLATION SHALL COMPLY WITH ALL THE REQUIREMENTS OF THE OCCUPATIONAL SAFETY AND HEALTH ADMINISTRATION (OSHA) WHEREVER THEY MAY APPLY.
6. THE ELECTRICAL CONTRACTOR SHALL ASSUME FULL RESPONSIBILITY FOR LAYING OUT HIS WORK AND FOR ANY DAMAGED CAUSED TO THE OWNER OR OTHER CONTRACTORS BY IMPROPER LOCATION OR EXECUTION CARRYING OUT HIS WORK.
7. THE ELECTRICAL CONTRACTOR SHALL SCHEDULE HIS WORK TO AS RAPIDLY AS POSSIBLE IN COOPERATION WITH OTHER PROCEED TRADES AND IN SUCH MANNER AS TO NOT INTERFERE WITH OTHER WORK. THE CONTRACTOR SHALL COOPERATE WITH OTHER TRADES IN ORDER TO HAVE ALL PIPES, CONDUIT, ETC. INSTALLED TO THE BEST ADVANTAGE.
8. THESE SPECIFICATION COVER THE FURNISHING OF MATERIALS, TOOLS, EQUIPMENT, TRANSPORTATION, SERVICES, SCAFFOLDING, SUPERVISION, LABOR, AND OTHER ITEMS WHICH MAY NOT BE MENTIONED, BUT ARE NECESSARY FOR THE FABRICATION, INSTALLATION, OR APPLICATION AND COMPLETION TO THE ELECTRICAL WORK AS SHOWN ON THE DRAWING AND SPECIFIED HEREIN.
9. CORE DRILLING THROUGH FLOOR, WHERE REQUIRED FOR ROUTING OF CONDUIT, SHALL BE THE RESPONSIBILITY OF THE ELECTRICAL CONTRACTOR, SHALL BE THE RESPONSIBILITY OF THE ELECTRICAL CONTRACTOR. COORDINATE ALL CORE DRILLING WITH THE OWNER.
10. BEFORE ENERGIZING AND FACTORY FABRICATED EQUIPMENT, INSPECT EACH UNIT IN DETAIL. BOLTS AND CONNECTIONS SHALL BE TIGHT (TORQUE TIGHT WHERE REQUIRED) PER MANUFACTURES SPECIFICATIONS. COMPONENTS SHALL BE ALIGNED AND THE EQUIPMENT SHALL BE PLACED IN A SAFE OPERATIONAL CONDITION.
11. THE COMPLETE ELECTRICAL SYSTEM SHALL BE SAFE OF GROUNDS AND SHORT CIRCUITS AND SHALL OPERATE SATISFACTORILY UNDER FULL LOAD CONDITIONS WITHOUT EXCESSIVE HEATING AT ANY POINT IN THE SYSTEM.
12. EACH MOTOR SHALL BE TESTED TO INSURE ROTATION IN THE PROPER DIRECTION FOR ITS RESPECTIVE LOAD. PRIOR TO ROTATIONAL TEST, CHECK ALL MOTOR BEARINGS FOR PROPER LUBRICATION AS PER MANUFACTURERS REQUIREMENTS.
13. THE ELECTRICAL CONTRACTOR SHALL COORDINATE WITH THE OWNER AND HAVE WRITTEN APPROVAL PRIOR TO ANY SHUT DOWN THAT IS REQUIRED TO COMPLETE THE WORK.
14. MINIMUM CONDUCTOR SIZE SHALL BE #12 AWG. FOR POWER AND #14. FOR CONTROL UNLESS OTHERWISE NOTED.
15. ALL CONDUITS IN SLABS SHALL BE GALVANIZED RIGID STEEL, MINIMUM 3/4" CONDUIT. ALL ABOVE GRADE INTERIOR CONDUITS SHALL BE EMT, MINIMUM 3/4" CONDUIT.
16. E.C. SHALL FIRE STOP ALL PENETRATIONS AROUND CONDUIT.
17. ALL CONNECTIONS TO MOTORS SHALL BE FLEXIBLE, LIQUID TIGHT, METAL CONDUIT.
18. ALL DISCONNECT SWITCHES, STARTERS, PUSH BUTTONS AND ENCLOSURES SHALL BE UL LISTED AND SHALL BE NEMA 1, UNLESS OTHERWISE NOTED.
19. ALL EXPOSED POWER, CONTROL AND MONITORING CABLES IN CEILING AND ACCESS FLOOR SHALL BE PLENUM RATED PER N.E.C.
20. CONTRACTOR SHALL VERIFY ALL DIMENSIONS AND CLEARANCES IN THE FIELD.
21. CONTRACTOR SHALL FOLLOW OWNER'S SAFETY RULES & SHALL BROOM CLEAN DAILY. ALL DEBRIS SHALL BE REMOVED FROM THE BUILDING AND GROUNDS.
22. NO COMBUSTIBLE MATERIAL WILL BE PERMITTED IN UNDER FLOOR OR CEILING PLENUMS.
23. CONTRACTOR TO SUBMIT SPECIFIC REQUIREMENTS OF ALL EQUIPMENT WHICH DIFFERS FROM THE BASE DESIGN FOR APPROVAL TO THE ENGINEER PRIOR TO START OF WORK.
24. COORDINATE THE LOCATION AND SIZE OF EACH PULL BOX IN THE FIELD. PULL BOXES TO BE SIZED IN ACCORDANCE WITH N.E.C.
25. E.C. SHALL PROVIDE AND INSTALL A NEW UPDATED TYPEWRITTEN PANEL DIRECTORY IN ANY PANEL THAT THE E.C. HAS CHANGED, DELETED OR ADDED CIRCUITS IN. ONE COPY OF EACH DIRECTORY SHALL BE GIVEN TO THE BUILDING MANAGER.
26. CONDUITS ARE SHOWN DIAGRAMMATICALLY, EXACT LOCATIONS TO BE DETERMINED IN THE FIELD TO AVOID ANY CONFLICT WITH EXISTING CONDITIONS.
27. ALL EXISTING ELECTRICAL EQUIPMENT & CONDUITS SHALL REMAIN UNLESS OTHERWISE NOTED.
28. WHERE 120V, 20A CIRCUIT HOME RUNS ARE 100 FEET OR MORE, MINIMUM #10 WIRE SHALL BE USED.
29. ALL CONDUITS INSIDE THE BUILDING SHALL BE EMT AND ALL CONDUITS SHALL HAVE COMPRESSION FITTINGS.
30. COORDINATE ALL WORK WITH ARCHITECT, TENANT AND LANDLORD REPRESENTATIVE.
31. COORDINATE EXACT SCOPE OF WORK WITH ARCHITECT AND TENANT DESIGN CRITERIA PRIOR TO BID.
32. COORDINATE WITH CLIENT/OWNER REGARDING FIRE ALARM REQUIREMENT.

1 GENERAL ELECTRICAL NOTES

GENERAL DEMOLITION NOTES

1. ELECTRICAL CONTRACTOR SHALL BE RESPONSIBLE FOR ALL ELECTRICAL DEMOLITION WORK FOR THIS PROJECT WHETHER OR NOT SPECIFICALLY INDICATED ON THIS OR OTHER DEMOLITION PLANS. THIS WORK SHALL INCLUDE BUT IS NOT LIMITED TO THE DISCONNECTION, REMOVAL AND DISPOSAL OF LIGHTING FIXTURES, PANEL BOARDS, DISCONNECT SWITCHES, RECEPTACLES, JUNCTION BOXES, CABLE, LIGHT SWITCHES, CONDUIT, ELECTRICAL SERVICES ETC. PER SCOPE OF WORK OF THIS PROJECT.
2. EXISTING CONDITIONS, EQUIPMENT, MATERIALS & SIZES ARE SHOWN FOR REFERENCE ONLY. VERIFY EXISTING CONDITIONS & BRING ANY DISCREPANCIES TO THE ARCHITECT ATTENTION IN WRITING PRIOR TO BID SUBMISSION.
3. ELECTRICAL CONTRACTOR SHALL DISCONNECT AND REMOVE ALL ELECTRICAL EQUIPMENT AFFECTED BY THE REMOVAL OF ALL MECHANICAL EQUIPMENT. REMOVE WIRE BACK TO SOURCE AND LEAVE IN SAFE CONDITION.
4. ELECTRICAL CONTRACTOR SHALL PROVIDE AND MAINTAIN AND CONNECTIONS/DISCONNECTION'S AS NEEDED TO INSURE ADEQUATE SAFETY AND PROTECTION OF ALL PERSONS, EQUIPMENT AND MERCHANDISE.
5. WHERE CIRCUITS ARE BEING ABANDONED, E.C. IS RESPONSIBLE FOR PULLING ALL WIRING BACK TO SOURCE.
6. DISCONNECT. RELOCATE OR REMOVE ELECTRICAL EQUIPMENT AS NOTED & AS REQUIRED BY CHANGES IN CONSTRUCTION.
7. DISPOSE OF ALL MATERIALS AS DIRECTED BY ARCHITECT REPRESENTATIVE.
8. WHERE FLOOR SLAB IS TO BE OUT OR CHASED, THE ELECTRICAL CONTRACTOR IS TO OBTAIN THE APPROVAL OF THE BUILDING, STRUCTURAL ENGINEERS & ARCHITECT IN WRITING PRIOR TO INSTALLATION.
9. CONTRACTOR IS TO EXERCISE EXTREME CAUTION WHEN CUTTING SLAB TO AVOID DAMAGE TO ANY EXISTING CONDUITS THAT MAY BE CONCEALED IN OR BENEATH THE SLAB.
10. ALL EQUIPMENT OF VALUE SHALL BE REMOVED CAREFULLY AND ARE TO BE RETURNED TO THE OWNER UPON REQUEST. FIXTURES SHALL BE EITHER REUSED OR NEGOTIATED FOR RESALE OR CREDIT.
11. PROVIDE AS NECESSARY TEMPORARY LIGHTING AND ELECTRICAL FEEDS TO ANY REQUIRED FOR UNINTERRUPTED TRADING TEMPORARY CONNECTIONS FOR RELOCATED EQUIPMENT DURING CONSTRUCTION.
12. DISCONNECT & RELOCATE ANY ELECTRICAL LINES & REPAIR PULLBOXES THAT MAY BE DISTURBED DURING THIS RENOVATION.

2 GENERAL DEMOLITION NOTES

POWER PLAN NOTES:

1. REFER TO FOOD SERVICE DRAWING K1 FOR TAG LOCATIONS NOT SHOWN THIS SHEET.
2. REFER TO HVAC DRAWING M1 FOR EXACT LOCATIONS FOR MECHANICAL HVAC EQUIPMENT.
3. 3 PHASE 30 AMP NEMA 3R FUSED DISCONNECT ON WALK-IN CONDENSER. UNIT LOCATED ON ROOF. FUSE PER EQUIPMENT NAMEPLATE. LIQUID TIGHT FLEX CONNECTION.
4. MAKE FINAL POWER CONNECTION TO WALK-IN COOLER EVAPORATOR, PROVIDE MOTOR SWITCH IN CAST BOX.
5. MAKE FINAL POWER CONNECTION TO WALK-IN FREEZER, FREEZER EVAPORATOR, DEFROSTER, HEAT TAPE AND DOOR HEATER.
6. PROVIDE LOCAL 3 PHASE 60 AMP 3R NON-FUSED DISCONNECT SW. ON A/C/ RTU'S LOCATED ON ROOF EQUIPMENT NAMEPLATE. PROVIDE LIQUID TIGHT FLEX CONNECTION TO UNIT.
7. PROVIDE GFCI PROTECTED 5-20R DUPLEX RECEPTACLE. INSTALLED IN WP BOX WITH WP COVER AT RTU. (TYPICAL).
8. PROVIDE 120V WIRING TO DUCT MOUNTED SMOKE DETECTORS AND REMOTE TEST/INDICATORS. FOR EXACT LOCATIONS OF DUCT DETECTORS, REMOTE INDICATORS AND TEST SW'S. (SEE HVAC PLAN).
9. E.C. SHALL INSTALL AND WIRE RELAY CONTROL PANEL PACKAGE FOR HOOD EXHAUST FANS EF-1 AND EF-2. PROVIDE POWER AND INTERLOCK CONTROL WIRING FOR HP1-F CONTROL PANEL AND HOOD FIRE SUPPRESSION SYSTEM. SEE HOOD FAN CONTROL INTERLOCK WIRING DIAGRAM. SHEET M2. MOUNT STARTERS AND CONTROLS ON WALL.
10. "ON/OFF" SELECTOR SWITCH AND PILOT LIGHT IN NEMA 4X STAINLESS STEEL ENCLOSURE MOUNTED ON THE FACE OF THE HOOD. PROVIDE BY HOOD MFR.
11. PROVIDE 2 PHASE 30 AMPS NEMA 3R FUSED DISCONNECT SWITCH AND L.T. FLEX CONNECTION TO ROOF MTD ICE MAKER CONDENSER UNIT, FUSE SIZE PER MFG'S NAMEPLATE DATA.
12. PROVIDE CEILING OUTLET WITH ISOLATED GROUND RECEPTACLES SUPPORTED FROM BUILDING STRUCTURE FOR VIDEO MONITOR/PRINTER AND OR HEADSET. VERIFY EXACT REQUIREMENTS AND LOCATION.
13. PROVIDE 3/4" X 18" H X 24" W PLYWOOD TELEPHONE BOARD PAINTED WITH 2 COATS OF "LISTED" FIRE RETARDANT LIGHT GRAY COLOR PAINT. AT 96" A.F.F. PROVIDE QUAD RECEPTACLE ADJACENT TO BOARD. PROVIDE # 6 CU, GROUND TO SERVICE ENTRANCE GROUND, SEE DETAIL ARCHITECTURAL ELEVATIONS.
14. PROVIDE CEILING DROPS FOR PRODUCTION COUNTER BRANCH CIRCUITS TO CEILING MOUNTED J-BOXES TO SERVE ALL ELECTRICAL IN CTR.
15. PRODUCTION COUNTER ELECTRICAL POWER CIRCUITS: REFER TO PANEL SCHEDULE FOR CIRCUIT NO'S. REFER TO EQUIPMENT SUPPLIER SHOP DRAWINGS FOR EXACT LOCATIONS AND TYPE OF CONNECTIONS FOR EQUIPMENT AND HEAT LIGHTS IN/OR ON PRODUCTION COUNTER.
16. BRANCH CIRCUIT(S) CONTINUED TO ADDITIONAL OUTLETS, HOMERUN SHOWN FOR CLARITY ONLY.
17. OUTLET AND CONNECTION FOR SECURITY CAMERA. VERIFY EXACT LOCATIONS AND TYPE CONNECTIONS FOR INDOOR AND OUTDOOR CAMERAS WITH G.C..
18. ROUTE ALL CONDUIT ROOF PENETRATIONS THRU (WITH-IN) ROOF CURBS FOR THE EQUIPMENT. REFER TO MECHANICAL PLANS FOR CURB DETAILS. (TYPICAL).
19. PROVIDE 1" CONDUIT TO 6" ABOVE CEILING
20. HOOD ANSUL FIRE SUPPRESSION SYSTEM.
21. MAKE FINAL CONNECTION TO EQUIPMENT.
22. 30 AMP, 120V, 3W RECEPTACLE (NEMA 5-30R).

3 POWER PLAN NOTES

ELECTRICAL NOTES:

1. ALL WORK MUST BE PERFORMED IN ACCORDANCE WITH THE REQUIREMENTS OF AUTHORITY HAVING JURISDICTION AND ALL APPLICABLE CODES AND REGULATIONS.
2. RECEPTACLES ARE TO BE INSTALLED THROUGHOUT AS REQUIRED BY CODE, IN ADDITION TO THOSE CALLED FOR IN THE ARCHITECTURAL PLAN AND THOSE NEEDED FOR SPECIFIC EQUIPMENT SHOWN IN THE LAYOUT.
3. COORDINATE ALL ELECTRICAL SERVICE INSTALLATION REQUIREMENTS WITH LOCAL UTILITY COMPANY PRIOR TO CONSTRUCTION.
4. CONDUIT SHALL BE ROUTED AS HIGH AS POSSIBLE AND PARALLEL TO WALLS. CONDUIT PENETRATION THRU WALLS BE MADE PERPENDICULAR TO THE SURFACE OF THE WALL. SEAL AROUND OPENINGS WITH AN APPROVED FIRESTOPPING MATERIAL WHERE CONDUITS PENETRATE FIRE-RATED WALLS.
5. COORDINATE THE EXACT LOCATION AND POWER REQUIREMENTS OF MECHANICAL & PLUMBING EQUIPMENT WITH THEIR RESPECTIVE TRADES.
6. INSTALL ELECTRICAL DISCONNECTING MEANS AND FINAL POWER TERMINATIONS FOR MECHANICAL AND PLUMBING EQUIPMENT AS REQUIRED BY THE EQUIPMENT MANUFACTURER. SOME MECHANICAL EQUIPMENT HAS BEEN SPECIFIED WITH INTEGRAL ELECTRICAL DISCONNECTING MEANS AND WEATHERPROOF, GFI CONVENIENCE RECEPTACLES. CONFIRM THAT THE EQUIPMENT HAS BEEN PROPERLY MANUFACTURED AS SUCH AND PROVIDE FINAL CONNECTIONS AS REQUIRED.
7. THIS ELECTRICAL PLAN IS INTENDED TO SHOW SCHEMATIC EQUIPMENT CONNECTION LOCATIONS AND THEIR RESPECTIVE WIRING REQUIREMENTS. THE ELECTRICAL CONTRACTOR SHALL FIELD VERIFY ACTUAL CONNECTION REQUIREMENTS FOR EACH PIECE OF EQUIPMENT AND FURNISH AND INSTALL ANY ADDITIONAL OUTLETS, JUNCTION BOXES, DISCONNECT SWITCHES, CONDUIT AND WIRING AS REQUIRED FOR A COMPLETE AND OPERATIONAL INSTALLATION AS REQUIRED BY CODE AND BY THE EQUIPMENT MANUFACTURER'S RECOMMENDATIONS.
8. REFER TO THE ELECTRICAL SINGLE-LINE RISER DIAGRAM AND PANEL SCHEDULES FOR ADDITIONAL INFORMATION INCLUDING CONDUCTOR QUANTITIES AND SIZES, OVERCURRENT PROTECTION SIZES, ETC.
9. EXACT LOCATIONS AND MOUNTING HEIGHT OF ALL RECEPTACLES & LIGHTING SHALL BE COORDINATED WITH THE ARCHITECT AND OWNER PRIOR TO INSTALLATION.
10. SEE DIAGRAMS FOR TYPICAL OUTLET LAYOUTS AT SPECIFIC EQUIPMENT LOCATIONS. THESE ARE IN ADDITION TO OUTLETS REQUIRED BY CODE.
11. PROVIDE "GFI" FEATURES FOR ALL RECEPTACLES IN KITCHEN, SERVICE AREA AND BATHROOMS.
12. ALL RECEPTACLES WITHIN 6 FEET OF A SINK AND A SOURCE OF WATER SHALL BE GROUND FAULT CIRCUIT INTERRUPTER (GFCI) PROTECTED.
13. COORDINATE POWER & DATA REQUIREMENTS FOR SPECIFIC EQUIPMENT WITH MANUFACTURER'S RECOMMENDATIONS PER OWNER SUPPLIED INFORMATION SHEETS.
14. PROVIDE TELEVISION CABLE AND TELEPHONE AND DATA LINES (CAT6). COORDINATE EXACT LOCATION WITH ARCHITECT AND OWNER PRIOR TO INSTALLATION.
15. ALL EXTERIOR RECEPTACLES SHALL BE GROUND FAULT CIRCUIT INTERRUPTER (GFCI) PROTECTED AND HOUSED IN A WEATHERPROOF ENCLOSURE.
16. E.C. TO WIRE EMERGENCY FIXTURE AHEAD OF LOCAL SWITCH.
17. EQUIPMENT LOCATED UNDER THE HOOD, SHALL BE WIRED TO SHUNT TRIP BREAK IN PANEL.
18. IF LIGHT FIXTURE IS TO BE SUBMITTED IT MUST BE SUBMITTED TO THE LOCAL TOWNSHIP FOR REVIEW AND APPROVAL PRIOR TO ANY CHANGES FROM THE APPROVAL
19. BRANCH CIRCUIT CONDUCTORS SHALL NOT BE SMALLER THAN NO. 12 AWG AND WHERE BRANCH CIRCUIT CONDUCTOR RUNS FROM THE SOURCE OR PANEL TO THE LAST DEVICE IN THE BRANCH CIRCUIT EXCEEDS 100 FEET IN LENGTH, THE CIRCUIT CONDUCTORS SHALL BE SIZED NO. 10 AWG MINIMUM AND FOR THE ENTIRE LENGTH OF THE CIRCUIT. FOR RUNS OVER 200 FEET IN LENGTH, THE CONDUCTORS SHALL BE SIZED NO 8. AWG. MINIMUM AND FOR THE ENTIRE LENGTH OF THE CIRCUIT. THE ABOVE APPLIES TO 120 VOLT BRACH CIRCUITS ONLY.

4 ELECTRICAL NOTES

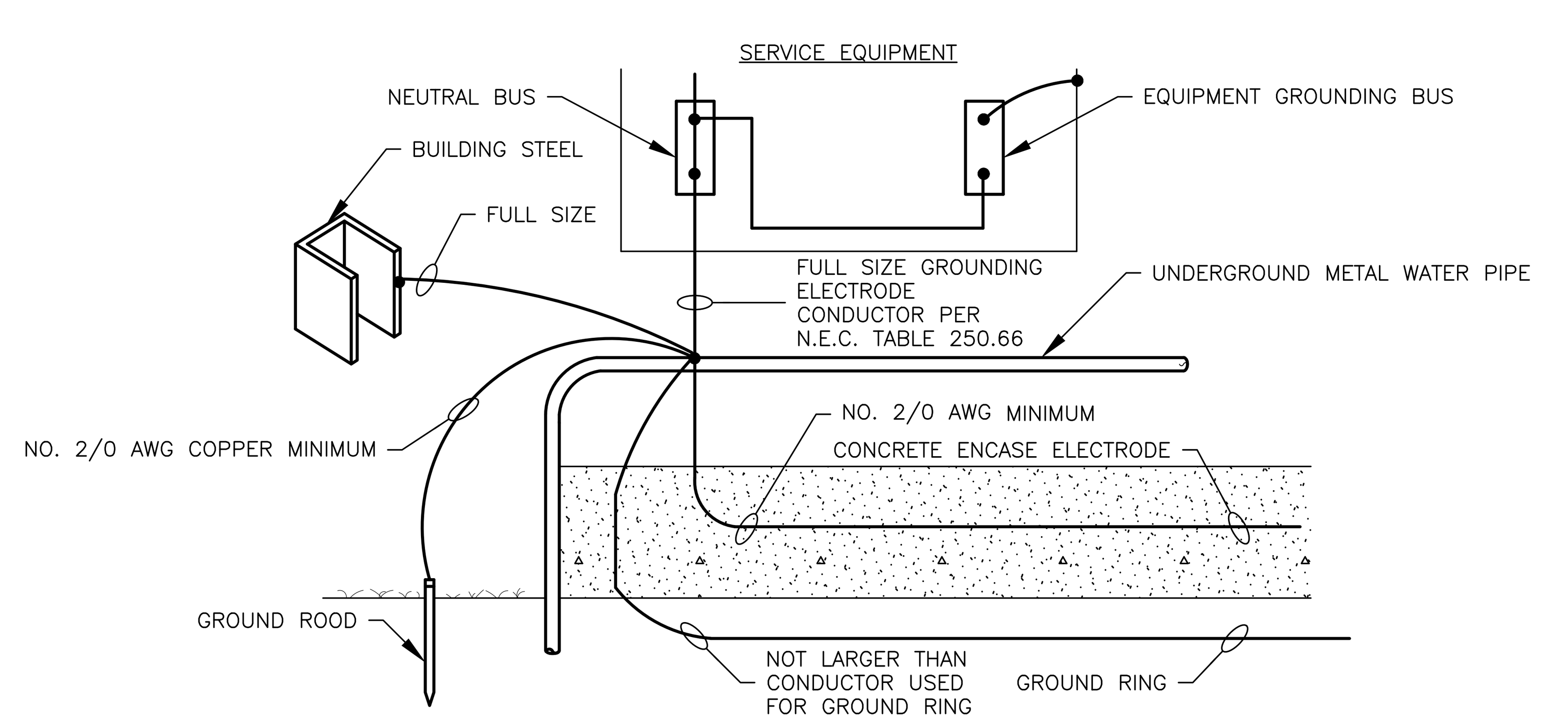

5 SERVICE ENTRANCE GROUNDING DETAIL

SCALE: NONE

ALBERT TAUS & ASSOCIATES, ARCHITECTS
ALBERT TAUS, A.I.A., ARCHITECT
ARCHITECTURE·PLANNING·INTERIOR DESIGN·ENGINEERING
P H I L A D E L P H I A, P A
PHONE: (215) 698 - 2516 · FAX: (215) 698 - 7398
atausarchitects.com

THESE PLANS ARE THE PROPERTY OF ALBERT TAUS & ASSOCIATES, ARCHITECTS, AND ARE NOT TO BE USED WITHOUT THE EXPRESSED WRITTEN PERMISSION OR CONSENT OF ALBERT A. TAUS, R.A., A.I.A.

STATE OF MISSOURI · ALBERT A. TAUS · NUMBER A-2015032715 · ARCHITECT

SIGNATURE

DOCUMENTS PREPARED FOR
DDW21DOUGLAS, LLC
C/O: MR. HOSSAM SHAHIN
109 E. HALE LAKE RD
WARRENSBURG, MO 64093

ATA200602.10

DATE	04/16/21
SCALE	AS NOTED
DRAWN	
CKD	DJK
APPD	AAT

NO	DESCRIPTION	DATE
6		
5		
4		
3		
2		
1		
–	ISSUED FOR PERMIT	4-29-21

REVISIONS

PROPOSED PROJECT
DUNKIN'
WITH DRIVE THRU
1100 NE DOUGLAS STREET
LEE'S SUMMIT MO. 64086
NEXT GEN (COOL PALAETTE)
ELECTRICAL NOTES & DETAILS

THESE PLANS ARE CONFIDENTIAL PROPERTY OF DUNKIN' BRANDS INC. UNDER RESTRICTED ACCESS.

DUNKIN' BRANDS [eatdrinkthink]

E1.2

GENERAL NOTES

1. COORDINATE ALL EQUIPMENT UTILITY INFORMATION SHOWN ON THIS SHEET WITH THE DUNKIN' BRANDS EQUIPMENT SCHEDULE AND EQUIPMENT MANUFACTURER'S CUT SHEETS.
2. ALL ELECTRIC INFORMATION SHOWN ON THIS PAGE IS REQUIRED FOR EQUIPMENT.
3. OUTLETS ARE SHOWN FOR POSITIONING PURPOSES ONLY. REFER TO EQUIPMENT SPECIFICATIONS FOR AMOUNT OF POWER TO EACH PIECE OF EQUIPMENT AND TYPE OF RECEPTACLE REQUIRED
4. ELECTRICAL CONTRACTOR IS RESPONSIBLE TO RE-LABEL ALL ELECTRICAL PANELS AND PROVIDE A TYPED DIRECTOR.

SYMBOL LEGEND

- DUPLEX RECEPTACLE
- GFCI DUPLEX RECEPTACLE
- SPECIAL RECEPTACLE
- GFCI QUAD RECEPTACLE
- ELECTRICAL DISCONNECT
- C.T. COUNTER TOP
- I.C. IN CASEWORK
- TELEPHONE OUTLET, RJ45 , BOX
- DATA OUTLET RJ45
- QUAD DATA OUTLET, RJ45
- BUMP BAR
- VIDEO DISPLAY UNIT
- POINT OF SALE TERMINAL
- PRINTER
- THERMOSTAT
- SWITCH
- (N/A) NOT APPLICABLE
- (E) EXISTING
- (RELO.) RELOCATED

KEY

1. SEE POS AND COMMUNICATIONS. PLAN FOR FURTHER INFORMATION REGARDING POS AND UNDER COUNTER ELECTRICAL SERVICE.
2. CONTRACTOR SHALL PROVIDE POWER AND NECESSARY WIRING FOR THE HOOD CONTROL PANEL. SEE THE CAPTIVE AIRE DRAWINGS FOR WIRING REQUIREMENTS.
3. CONTROL RELAY PANEL. SEE LIGHTING PLAN FOR SCHEDULE AND CONTROL DETAIL DRAWINGS FOR ADDITIONAL INFORMATION.
4. PROVIDE JUNCTION BOXES AT TOILETS AND SINKS.
5. REFER TO POS COMMUNICATIONS FLOOR PLAN FOR LOCATIONS AND ELEVATIONS OF OFFICE RECEPTACLES.
6. SINGLE POINT CONNECTION FOR WALK-IN FREEZER AND REFRIGERATOR. THE CONTRACTOR SHALL CONFIRM ELECTRICAL REQUIREMENTS AND MEANS OF DISCONNECT OF THE ROOF MOUNTED CONDENSING UNITS AND EVAPORATOR UNITS LOCATED WITHIN THE BOXES. ALSO, PROVIDE ELECTRICAL CONNECTION OF DOOR HEATER, CONDENSATE DRAIN AND HEAT TRACE TAPE.
7. MOUNT RECEPTACLES FOR FRONTLINE BAKERY DISPLAY CASES IN MILLWORK AS REQUIRED. PROVIDE FLEXIBLE CONDUIT WHIP FOR FINAL INSTALLATION AFTER MILLWORK IS INSTALLED. COORDINATE AS REQUIRED.
8. CIRCUIT SHALL BE CIRCUITED AND CONTROLLED WITH LIGHTING IN THIS AREA.
9. N/A.
10. ELECTRICAL CONTRACTOR SHALL PROVIDE JUNCTION BOX FOR THE EXTERIOR SIGNAGE. INSTALL THE JUNCTION BOX WITHIN THE BUILDING. THE SIGNS SHOULD BE SUPPLIED WITH WHIPS FOR FINAL CONNECTION TO THIS JUNCTION BOX. WITH COORDINATE WITH THE SIGN VENDOR ON THE QUANTITY AND LOCATION OF THE REQUIRED JUNCTION BOXES. THE CONTRACTOR SHALL PROPERLY SIZE THE JUNCTION BOX BASED ON THE QUANTITY OF CONNECTIONS REQUIRED. VERIFY LOCATION WITH ARCHITECTURAL DRAWINGS AND SIGN VENDOR PRIOR TO INSTALLING. ALL SIGNS SHALL BE CONTROLLED VIA TIME CLOCK.
11. CONTRACTOR TO MOUNT RECEPTACLE IN THE WALL BEHIND DIGITAL MENU BOARD. VERIFIED IN FIELD FOR EXACT LOCATION PRIOR TO INSTALLATION.
12. EQUIPMENT MOUNTED ON ROOF. SEE MECHANICAL PLAN FOR MORE INFORMATION.

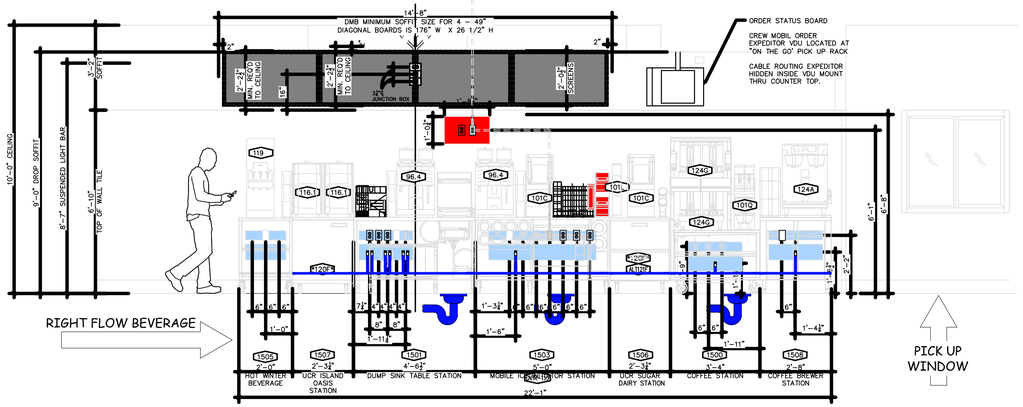

4 E2.1 OMNI ELECTRICAL POWER AT BACKLINE (REFERENCE)
SCALE: NOT TO SCALE

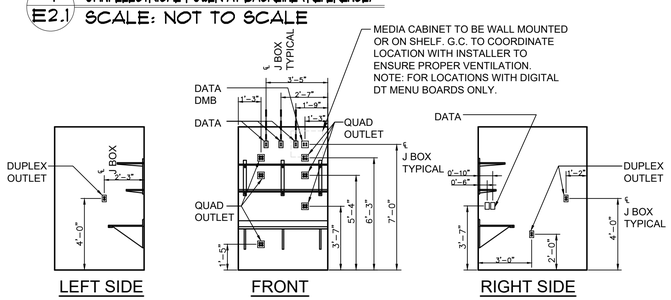

3 E2.1 OFFICE POWER ELEVATION
SCALE: NOT TO SCALE

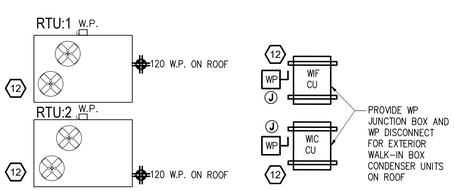

EXISTING HVAC UNITS

2 E2.1 HVAC UNIT POWER
SCALE: NOT TO SCALE

ELECTRICAL GENERAL NOTES:

1. VERIFY ELECTRICAL REQUIREMENTS WITH EQUIPMENT NAMEPLATE. REPORT TO ENGINEER FOR ANY DISCREPANCIES.
2. E.C. SHALL FURNISH AND INSTALL JUNCTION BOX AND TOGGLE SWITCH FOR EXTERIOR, BUILDING MOUNTED SIGN. COORDINATE EXACT LOCATION PRIOR TO INSTALLATION.
3. LIGHTING FIXTURE: REMOVE LIGHTING FIXTURE AND SWITCH CONTROL. WHEN THE FIXTURE TO BE REMOVED IS SERVICED BY A CIRCUIT, THAT SUPPLIES IN OTHER AREAS THAT ARE TO REMAIN, THE E.C. SHALL MAINTAIN THE CONTINUITY OF THE CIRCUIT TO THE REMAINING FIXTURES.
4. POWER RECEPTACLES: REMOVE RECEPTACLE. WHEN THE RECEPTACLE TO BE REMOVED IS SERVICED BY A CIRCUIT THAT SUPPLIES RECEPTACLES IN OTHER AREAS, THAT ARE TO REMAIN, THE E.C. SHALL MAINTAIN THE CONTINUITY OF THE CIRCUIT TO THE REMAINING RECEPTACLES.
5. PANELS: BALANCE PANEL LOAD FOR EACH PHASES, A, B & C. ALLOW FOR RELOCATING CIRCUITS WITHIN PANEL BOARD TO BALANCE THE LOAD.
6. TEST: UPON COMPLETION AND IMMEDIATELY PRIOR TO FINAL INSPECTION AND TAKEOVER, CHECK LOAD BALANCE ON ALL FEEDERS AND AT DISTRIBUTION CENTERS, PANELS, ETC. TEST TO BE CARRIED OUT BY TURNING ON ALL POSSIBLE LOADS AND CHECKING LOAD CURRENT BALANCE. IF LOAD UNBALANCE EXCEEDS 15%, RECONNECT CIRCUITS TO BALANCE LOAD.
7. E.C. TO VERIFY EXISTING ELECTRICAL LOAD/DEMAND IN FIELD PRIOR TO ROUGH IN. CONTACT ENGINEER IF THERE ARE DISCREPANCY OR HARDSHIPS UPON FIELD INSPECTION

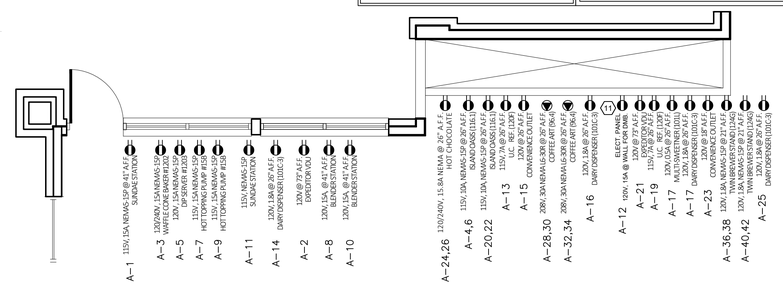

5 E2.1 ELECTRICAL RECEPTACLE LAYOUT
SCALE: 1/4" = 1'-0"

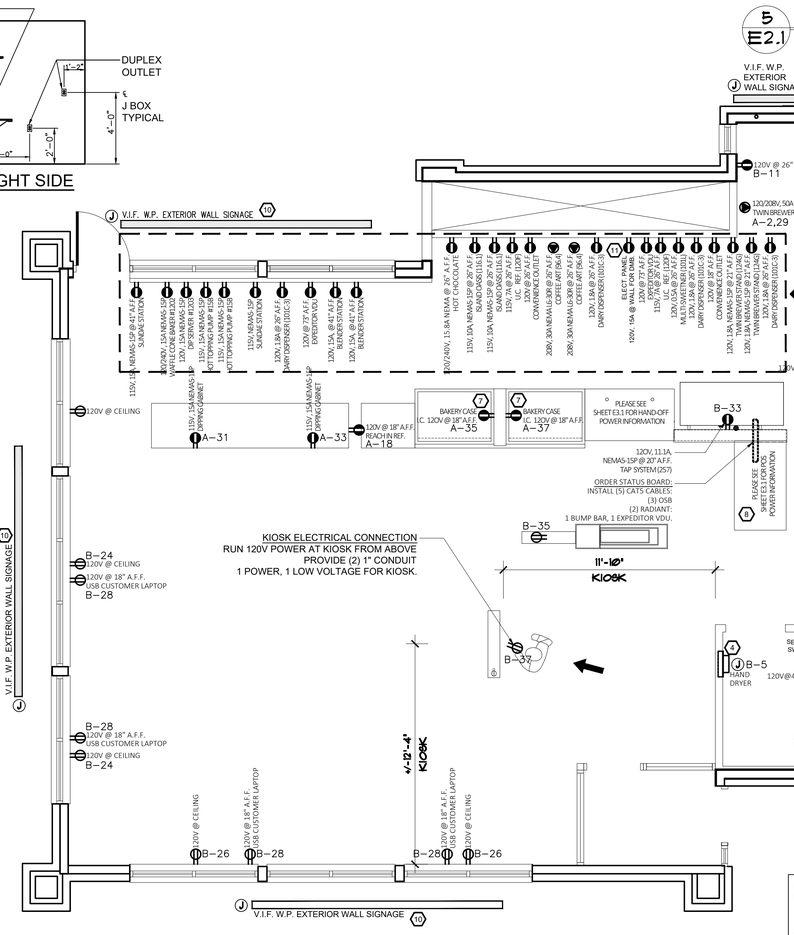

6 E2.1 ELECTRICAL RECEPTACLE LAYOUT
SCALE: 1/4" = 1'-0"

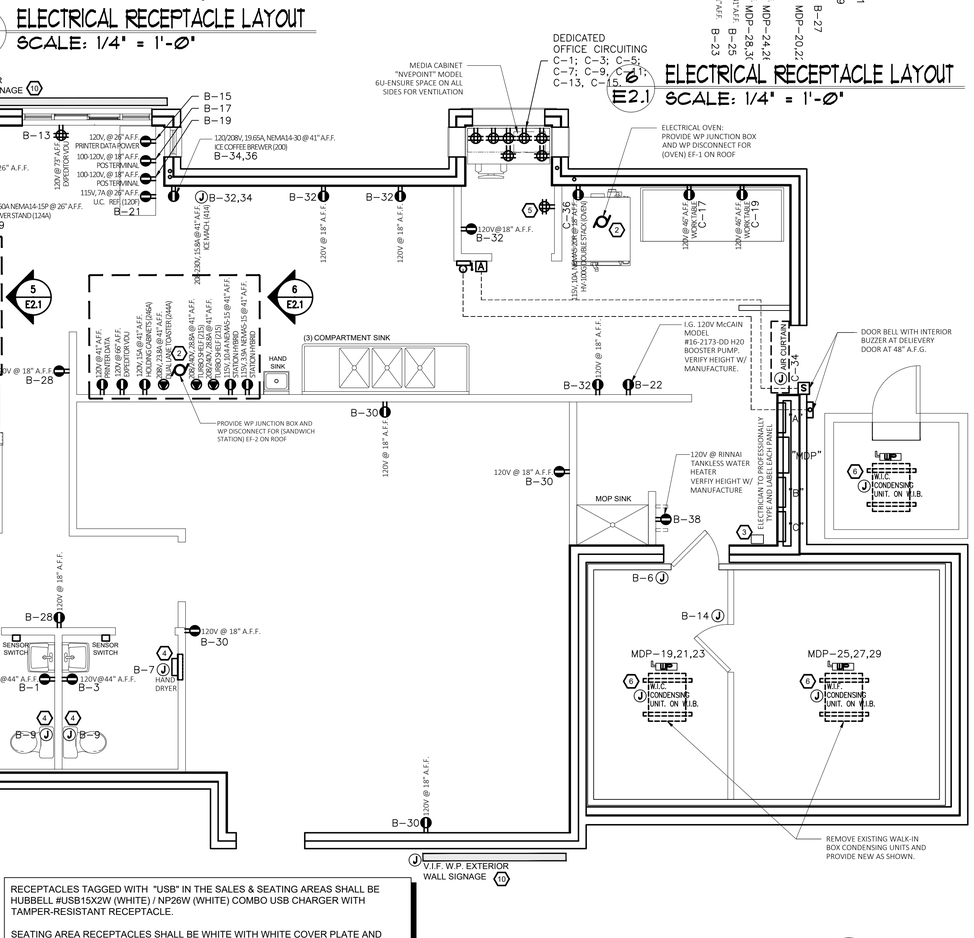

RECEPTACLES TAGGED WITH "USB" IN THE SALES & SEATING AREAS SHALL BE HUBBELL #USB15X2W (WHITE) / NP26W (WHITE) COMBO USB CHARGER WITH TAMPER-RESISTANT RECEPTACLE.

SEATING AREA RECEPTACLES SHALL BE WHITE WITH WHITE COVER PLATE AND ARE TO BE MOUNTED AT 18" AFF.

1 E2.1 ELECTRICAL POWER PLAN
SCALE: 1/4" = 1'-0"

PROJECT NORTH

ALBERT TAUS & ASSOCIATES, ARCHITECTS
ALBERT TAUS, AIA, ARCHITECT
ARCHITECTURE·PLANNING·INTERIOR DESIGN·ENGINEERING
PHONE: (215) 698 - 2516 · FAX: (215) 698 - 7398
atausarchitects.com

THESE PLANS ARE THE PROPERTY OF ALBERT TAUS & ASSOCIATES, ARCHITECTS, AND ARE NOT TO BE USED WITHOUT THE EXPRESSED WRITTEN PERMISSION OR CONSENT OF ALBERT A. TAUS, R.A., A.I.A.

STATE OF MISSOURI — ALBERT A. TAUS — NUMBER A-2015032715 — ARCHITECT — SIGNATURE

DOCUMENTS PREPARED FOR
DOUGLAS, LLC
C/o: MR. HOSSAM SHAHIN
109 E. HALE LAKE RD
WARRENSBURG, MO 64093

DATE	04/16/21
SCALE	AS NOTED
DRAWN	LJ
CKD	DJK
APPD	AAT

NO	DESCRIPTION	DATE
6		
5		
4		
3		
2		
1	ISSUED FOR PERMIT	4-29-21

REVISIONS

PROPOSED PROJECT
DUNKIN' WITH DRIVE THRU
100 NE DOUGLAS STREET
LEE'S SUMMIT MO 64086
NEXT GEN (COOL PALAETTE)

ELECTRICAL POWER PLAN & DETAILS

THESE PLANS ARE CONFIDENTIAL PROPERTY OF DUNKIN' BRANDS, INC. UNDER RESTRICTED ACCESS

DUNKIN' BRANDS [we drink and we know]

E2.1

ATA200602.10

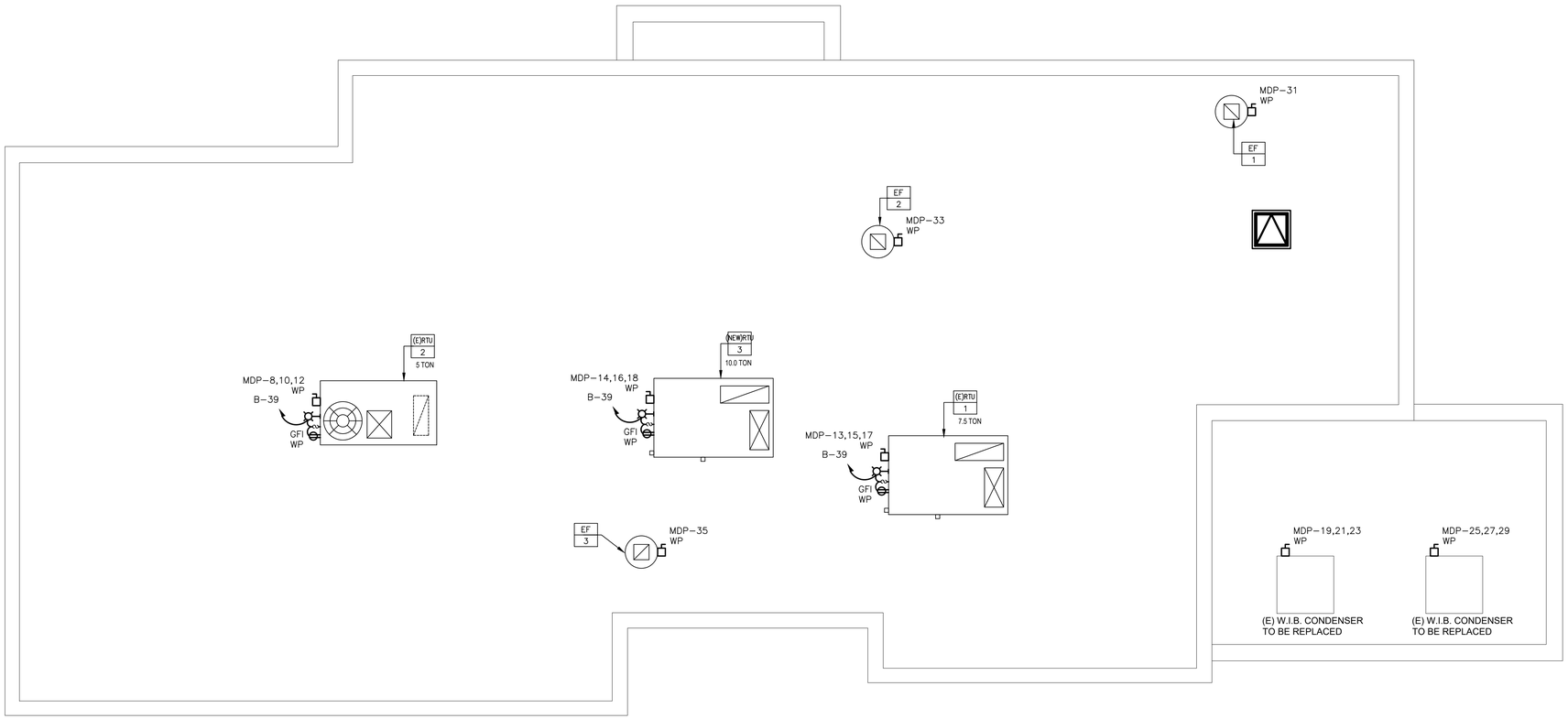

1
E2.2
ELECTRICAL HVAC POWER PLAN
SCALE: 1/4" = 1'-0"

PROJECT NORTH

ALBERT TAUS
& ASSOCIATES, ARCHITECTS
ALBERT TAUS, A.I.A., ARCHITECT
ARCHITECTURE·PLANNING·INTERIOR DESIGN·ENGINEERING
PHILADELPHIA, PA
PHONE: (215) 698-2516 · FAX: (215) 698-7398
atausarchitects.com

THESE PLANS ARE THE PROPERTY OF ALBERT TAUS & ASSOCIATES, ARCHITECTS, AND ARE NOT TO BE USED WITHOUT THE EXPRESSED WRITTEN PERMISSION OR CONSENT OF ALBERT A. TAUS, R.A., A.I.A.

STATE OF MISSOURI
ALBERT A. TAUS
NUMBER
A-2015032715
ARCHITECT

SIGNATURE

DOCUMENTS PREPARED FOR
DDW21DOUGLAS, LLC
C/o: MR. HOSSAM SHAHIN
109 E. HALE LAKE RD
WARRENSBURG, MO 64093

ATA200602.10

NO	DESCRIPTION	DATE
6		
5		
4		
3		
2		
1	ISSUED FOR PERMIT	4-29-21

REVISIONS

DATE	04/16/21
SCALE	AS NOTED
DRAWN	
CKD	DJK
APPD	AAT

PROPOSED PROJECT
DUNKIN'
WITH DRIVE THRU
1100 NE DOUGLAS STREET
LEE'S SUMMIT MO. 64086

NEXT GEN (COOL PALAETTE)

ELECTRICAL HVAC POWER PLAN & DETAILS

DUNKIN' BRANDS
[eat drink & wait]

E2.2

THESE PLANS ARE CONFIDENTIAL PROPERTY OF DUNKIN' BRANDS, INC. UNDER RESTRICTED ACCESS.

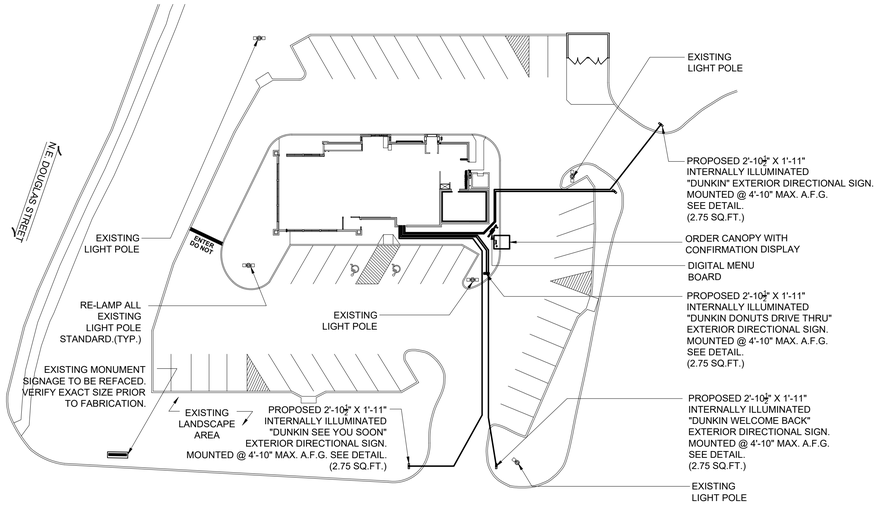

4 E3.1 SITE PLAN
SCALE: NOT TO SCALE

PROJECT NORTH

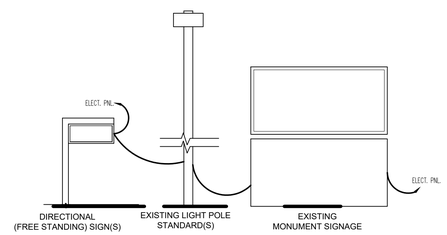

V.I.F. SEE SITE PLAN DRAWINGS FOR MORE INFORMATION AND EXACT QUANTITY AND LOCATION

3 E3.1 DIRECTIONAL/ PYLON
SCALE: NOT TO SCALE

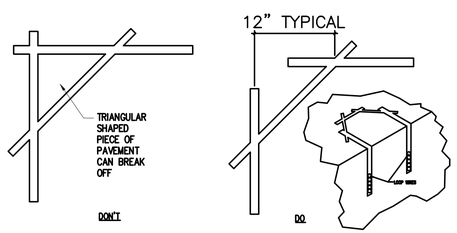

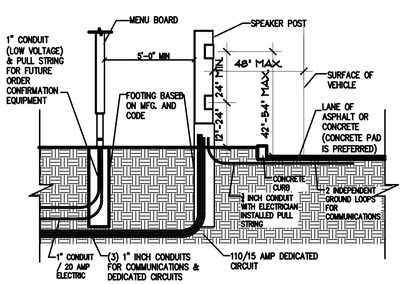

2 E3.1 SECTION AT D/T SPEAKER AND MENUBOARD
SCALE: NOT TO SCALE

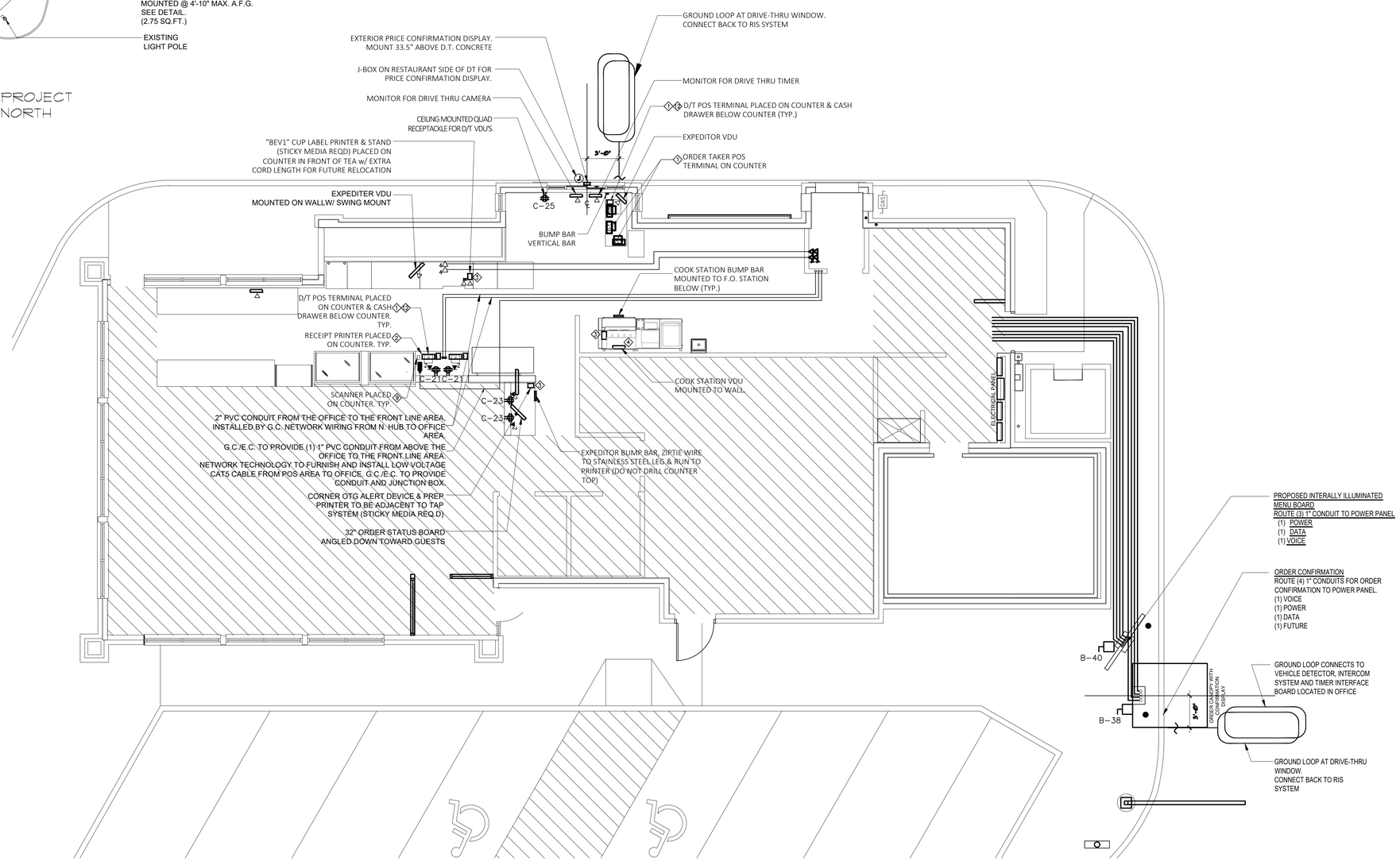

1 E3.1 POS COMMUNICATION PLAN
SCALE: NOT TO SCALE

PROJECT NORTH

ALBERT TAUS & ASSOCIATES, ARCHITECTS
ALBERT TAUS, AIA, ARCHITECT
ARCHITECTURE·PLANNING·INTERIOR DESIGN·ENGINEERING
PHONE: (215) 698-2516 · FAX: (215) 698-7398
PHILADELPHIA
atausarchitects.com

THESE PLANS ARE THE PROPERTY OF ALBERT TAUS & ASSOCIATES, ARCHITECTS, AND ARE NOT TO BE USED WITHOUT THE EXPRESSED WRITTEN PERMISSION OR CONSENT OF ALBERT A. TAUS, R.A., A.I.A.

STATE OF MISSOURI
ALBERT A. TAUS
NUMBER A-2015032715
ARCHITECT

SIGNATURE

DOCUMENTS PREPARED FOR
DDW2DOUGLAS, LLC
C/o: MR. HOSSAM SHAHIN
109 E. HALE LAKE RD
WARENSBURG, MO 64093

ATA200602.10

	DATE	04/16/21
	SCALE	AS NOTED
	DRAWN	LJ
	CKD	DJK
	APPD	AAT

NO	DESCRIPTION	DATE
1	ISSUED FOR PERMIT	4-29-21

REVISIONS

THESE PLANS ARE CONFIDENTIAL PROPERTY OF DUNKIN' BRANDS INC. AND ARE TO BE RECEIVED ACCESS

PROPOSED PROJECT
DUNKIN' WITH DRIVE THRU
1100 NE DOUGLAS STREET
LEE'S SUMMIT, MO 64086
NEXT GEN (COOL PALAETTE)

ELECTRICAL COMMUNICATION PLAN & DETAILS

DUNKIN' BRANDS [and drinkin']

E3.1

POS-COMMUNICATIONS EQUIPMENT SCHEDULE

POS EQUIP & WIRING BY OTHERS

#	QTY	DESCRIPTION	LOCATION	LOAD VOLTS	LOAD AMPS	LOAD CB	TRANS FORMER	LOVO TERM	REMARKS
		POS EQUIPMENT							
1	4	POINT OF SALES TERMINAL (POS)	(2) FRONT COUNTER (1) D/T (1) D/T OT	100-120V	2.0	20A/1P	NO	RJ45	SHARES CIRCUIT WITH POS ITEMS 2 & 12
2	3	RECEIPT PRINTER	(2) FRONT COUNTER (1) D/T	100-240V	2.0	20A/1P	YES	RJ45	SHARE CIRCUIT WITH POS ITEMS 1 & 12
3	5	PREP PRINTER	(1) COFF.STATION (1) BEVERAGE STATION (2) SANDWICH (1) OTGO PRINTER	24/34V	1.2	20A/1P	YES	RJ45	
4	4	VDU	(1) BEVERAGE STA (1) SANDWICH (1) EXPEDITER @ D/T (1) EXPEDITER @ HAND OFF	100-240V	1.5	20A/1P	NO	N/A	SHARES CIRCUIT
5	4	VDU CONTROLLER (PC BASED)		100-120V	1.0	20A/1P	YES	RJ45	
6	1	POS NETWORK HUB/ SWITCH	POS COFFEE FRONT CHASE	100-120V	0.5	20A/1P	YES	RJ45	SHARES CIRCUIT WITH POS ITEMS 1, 2 & 12
7	1	PC SITE CONTROLLER EXTERNAL	OFFICE	100-120V	4.0	20A/1P	NO	RJ45	
7a	1	PC SITE CONTROLLER INTERNAL	OFFICE	100-120V	4.0	20A/1P	NO	RJ45	
8	1	PRINTER/FAX/COPIER (BOH)	OFFICE	100-120V	8.2	20A/1P	NO	N/A	
9	3	SCANNER	(2) FRONT COUNTER (1) D/T				NO	RJ45	CONNECTED TO POS UNITS
10	3	PRICE CONFIRMATION DISPLAY	MOUNT OUTSIDE @ D/T WINDOW & BEHIND FRONT POS UNITS				NO	RJ45	CONNECTED TO D/T POS UNIT
11	0	NOT USED							
12	3	CASH DRAWER	UNDER CTR @ FRONT & D/T	N/A	N/A		NO	RJ45	SHARES CIRCUIT WITH POS ITEMS 1 & 2
13	0	NOT USED		N/A	N/A		NO	RJ45	VERIFY ALL ELECT & POS REQTS w/ MANUF
14	3	PAYMENT TERMINAL	(2) FRONT COUNTER (1) D/T	100-240V	0.5	20A/1P	NO	RJ45	VERIFY ALL ELECT & POS REQTS w/ MANUF
14a	3	VERIFONE SWITCH	(2) FRONT COUNTER (1) D/T						CONNECTED TO POS (1)
30	1	ORDER STATUS BOARD	(1) FRONT COUNTER						VERIFY ALL ELECT & POS REQTS w/ MANUF
		OTHER COMMUNICATION DEVICES							
15	1	DRIVE THROUGH (DT) TIMER CONSOLE	OFFICE	120V	N/A		NO	RS232	MUST BE WITHIN 60FT OF DISPLAY
16	1	DT TIMER VDU DISPLAY		LOW VOLT	N/A		NO		
		PHONE & DATA LINES							
18	0	SPARE	OFFICE	LOW VOLT	N/A		N/A	RJ45	
19A	0	SPARE	OFFICE	LOW VOLT	N/A		N/A	RJ45	
20	1	FAX LINE	OFFICE	LOW VOLT	N/A		N/A	RJ45	FAX LINE FOR OFFICE
21	1	PHONE LINE	OFFICE	LOW VOLT	N/A		N/A	RJ45	PHONE LINE FOR OFFICE
22	0	NOT USED							
23	1	HIGH SPEED INTERNET LINE (MNS)	OFFICE	LOW VOLT	N/A		N/A	RJ45	FOR SITE CONTROLLER & BOH PC
24	1	SYSTEM SECURITY DVR	SECURITY SYSTEM	LOW VOLT	N/A		N/A	RJ45	PLUGS INTO ROUTER PORT#2
25	8	DIGITAL MENU BOARD	OFFICE/SERVICE AREA	LOW VOLT	N/A		N/A	RJ45	PLUGS INTO ROUTER PORT#4
26	1	WIFI	OFFICE	LOW VOLT	N/A		N/A	RJ45	PLUGS INTO ROUTER PORT#5
26a	0	SECONDARY WIFI ACCESS POINT (OPT)	OFFICE	LOW VOLT	N/A		N/A	RJ45	PLUGS INTO ROUTER
27	1	OTT VOIP (PHONE)	OFFICE	LOW VOLT	N/A		N/A	RJ45	PLUGS INTO ROUTER

#	QTY	DESCRIPTION	LOCATION					
		MUSIC SYSTEM						
28	1	MUSIC PLAYER	OFFICE					
29	0	NOT USED						
		WORKSTATION						
31	1	MANAGER'S WORKSTATION	OFFICE					
32	0	MANAGER'S WORKSTATION (OPT)						
		FIREWALL						
33	1	FIREWALL	OFFICE	LOW VOLT	N/A		N/A	RJ45
34	1	BROADBAND MODEM	OFFICE	LOW VOLT	N/A		N/A	RJ45
35		TEMPORARY WIRELESS BROADBAND DIAL-UP DATA SOLUTION	OFFICE					
36		NOT USED						
37		NOT USED						
		SWITCHES						
38	1	SWITCH	OFFICE					
39	1	DD UTILITY SWITCH (OPT)	OFFICE					
40	1	DVR NETWORK SWITCH	OFFICE					
41	1	DIGITAL MENU BOARD SWITCH	OFFICE					
42	1	KIOSK SWITCH	OFFICE					
		MENU BOARD						
45	4	INT DIGITAL MENU BOARDS						
46	2	EXT DIGITAL MENU BOARDS	EXTERIOR DRIVE THRU					
47	0	DRIVE PREVIEW BOARD	EXTERIOR DRIVE THRU					
48	1	ORDER COMFIRMATION BOARD	EXTERIOR DRIVE THRU					
49	0	NOT USED						

GENERAL NOTES

A. REFER TO HTTP://EXTRANET.DUNKINBRANDS.COM FOR A LISTING OF APPROVED POS VENDORS BY CONCEPT.

B. FINAL POS DRAWINGS NEED TO BE PROVIDED TO POS VENDOR THAT IS SELECTED.

C. POS VENDORS REQUIRE DEDICATED ISOLATED GROUNDED (DIG) OUTLETS ON A 20 AMP CIRCUIT DEDICATED ONLY TO POS EQUIPMENT. 60HZ, 120+/-10%. ALL POS TERMINALS AND VIDEO DISPLAY DEVICES REQUIRE A DUPLEX OUTLET. THE BACK OFFICE CONTROLLER REQUIRES A QUAD OUTLET. THE NETWORK SWITCH REQUIRES A DUPLEX. IF FEDERAL, STATE, AND LOCAL WIRING CODES DO NOT MEET THIS REQUIREMENT, CONTACT THE POS VENDOR FOR INFORMATION ON ADDITIONAL EQUIPMENT THAT CAN BE PURCHASED TO MEET THIS REQUIREMENT. IF THIS REQUIREMENT IS NOT MET, THE POS SYSTEM WARRANTY IS INVALID.

D. ALL POWER INDICATED ON THIS PLAN MUST HAVE A THIRD WIRE, ISOLATED GROUND, AND BE TERMINATED WITHIN (4) FEET OF THE DEVICE.

E. IG-5362 RECEPTACLES MUST BE USED FOR ALL POS UNITS. VDU UNITS AND SITE CONTROLLER UNIT (IN OFFICE). LABEL RECEPTACLES "POS ONLY".

F. ALL LOW VOLTAGE WIRE SHALL BE CATEGORY 5e UNLESS OTHER WISE INDICATED.

G. ALL LOW VOLTAGE CABLE TERMINATIONS SHALL BE BY THE ELECTRICAL CONTRACOR

H. LOW VOLTAGE CABLE RUN IN 1½" CONDUIT FOR POS EQUIPMENT ONLY, AND MUST BE TERMINATED WITH RJ45 JACKS. ALL POS EQUIPMENT LINES TERMINATE AT THE FRONT COUNTER CHASE.

I. A 12" MINIMUM SEPARATION MUST BE MAINTAINED BETWEEN LOW VOLTAGE WIRES AND POWER WIRING (TO AVOID ELECTRICAL INTERFERENCE).

J. BRAND REQUIREMENTS DICTATE THAT A MINIMUM OF THREE CONDUITS BE USED FOR DATA LINES BETWEEN THE OFFICE AND OTHER PARTS OF THE STORE- ONE CONDUIT IS TO BE DEDICATED TO POS WIRING, ONE FOR DIGITAL MENUBOARD DATA LINES, AND ANOTHER FOR NON-POS ITEMS (I.E. SECURITY CAMERAS, DT TIMERS, HEAD SET WIRING

K. EXACT # OF RECEPTACLES ON OFFICE MUST BE COORDINATED ON A PROJECT-BY-PROJECT BASIS IN TERMS OF EQUIPMENT LOCATED IN THE OFFICE

L. ALL CEILING MOUNTED VDU'S TO BE SUSPENDED FROM UNISTRUT BY THREADED ROD W/ WHITE PVC SLEEVE. CONNECT UNISTRUT TO ROOF STRUCTURE. VDU BY POS VENDOR; UNITSTRUT & THREADED ROD BY G.C. UNISTRUT TO SUPPORT MINIMUM 50 LB. WEIGHT

M. VDU MOUNTING HEIGHTS (TO BOTTOM OF MONITOR) ARE AS FOLLOWS:
   a. SANDWICH STATION - 68" A.F.F.
   b. DRIVE THRU - 61" A.F.F.

N. DIGITAL MENUBOARD PREP WIRING:
   a. PROVIDE BOX, PLATE AND 1" DIA. CONDUIT FROM FROM (2) QUAD DATA OUTLETS IN MENUBOARD SOFFIT TO (2) QUAD DATA OUTLETS IN OFFICE WALL. EITHER (A) PROVIDE PULL STRING IN EACH CONDUIT (CAT 5 CABLING AND FINAL DATA CONNECTIONS BY DMB VENDOR), OR (B) PROVIDE ALL CAT 5 CABLING AND FINAL CONNECTIONS TO DATA PLATES/BOXES- COORD. W/ F'EE

DIGITAL MENU BOARD RESPONSIBILITIES

GC POWER/DATA RESPONSIBILITY
- EC TO RUN DEDICATED CONDUIT FROM POWER PANEL TO JUNCTION BOX ON BACK SIDE OF MENU BOARD FASCIA AT CENTER LINE OF POS
- EC TO RUN CONDUIT WITH J-BOX FROM BACK SIDE OF MENU BOARD FASCIA AT CENTERLINE OF POS TO OFFICE

DMB VENDOR POWER/DATA RESPONSIBILITY
- CUT HOLE IN MENU BOARD FASCIA FOR POWER/DATA STACK
- IN STALL POWER/DATA STACK IN FASCIA
- RUN ELECTRICAL CONDUCTOR WIRE FROM MENU BOARD FASCIA TO ELECTRICAL PANEL
- MAKE FINAL ELECTRICAL CONNECTION AT POWER/ DATA STACK
- MAKE FINAL ELECTRICAL CONNECTION TO CIRCUIT AT POWER PANEL
- RUN CAT-5E CABLES AND TERMINATE ENDS AT MENU BOARD FASCIA POWER/DATA STACK AND IN OFFICE

*PRIOR TO BIDDING OR PERFORMING WORK GC TO COORDINATE WITH AUTHORITY HAVING JURISDICTION (AHU). AHU MAY REQUIRE FULL WIRE PREP BY EC. GC TO ALERT CM, F'EE AND DMB INSTALLER IF EC MUST PERFORM ALL ELECTRICAL INSTALL WORK.

KIOSK NOTES

- G.C. TO PROVIDE A POWER / POS STUB UP FROM FLOOR OR A UNISTRUT RAIL SUSPENDED FROM ROOF STRUCTURE @ 10'-6" A.F.F. FOR ELECTRICAL/DATA CONNECTIONS AT ORDER KIOSKS.
- 20A CIRCUIT & (3) CAT-6 DATA CABLES EA - ALL WIRING & FINAL LOC'Ns TBD IN FIELD w/ FRANCHISEE & MANUF REQUIREMENTS.
- PROVIDE WIRING FROM KIOSK TO FRONT LINE POS AREA FOR "REMOTE ASSISTANCE" w/ LIGHT AT POS UNIT - CONFIRM ALL REQUIREMENTS w/ MANUF.

CONDUIT NOTES

- DMB: PROVIDE (8) CAT 5 WIRE PULLS FROM (2) QUAD DATA OUTLETS IN MENU BOARD SOFFIT TO (2) QUAD DATA OUTLETS IN OFFICE WALL
- 2 CONDUITS MIN SHALL BE USED BETWEEN OFFICE & OTHER PARTS OF THE STORE
  1 CONDUIT FOR POS WIRING ONLY
  1 CONDUIT FOR NON-POS ITEMS

POS LEGENDS

Symbol	Description	Symbol	Description
POS	POINT OF SALES TERMINAL	OT	ORDER TAKER TERMINAL
VDU	VIDEO DISPLAY UNIT	DTC	DRIVE THROUGH CONSOLE
R	ROUTER	DTT	DRIVE THROUGH TIMER
SC	SITE CONTROL (SELF-MOUNTING) RADIANT ONLY	VS	VERIFONE SWITCH
RP	RECEIPT PRINTER	PT	PAYMENT TERMINAL
PP	PREP PRINTER	CASH DR	CASH DRAWER
FAX	FAX	CD	COIN DISPENSER
BOH PC	BACK-OF-HOUSE PC	MWS	MANAGER'S WORKSTATION
UPS	UPS	DVR	DVR SECURITY SYSTEM
M	MODEM	CAM	SECURITY SYSTEM CAMERA
SW	SWITCH	PCD	PRICE CONFIRMATION DISPLAY
	VIDEO DISPLAY UNIT	PCD	ORDER STATUS BOARD
	PRINTER	KIOSK SW	KIOSK SWITCH
	POINT OF SALE TERMINAL	DMB SW	DIGITAL MENU BOARD SWITCH
	SCANNER	DMB	DIGITAL MENU BOARD
	POS EQUIPMENT TAG	EXT DMB	DRIVE THRU EXTERIOR DIGITAL MENU BOARD
	DUPLEX RECEPTACLE	TEMP M	TEMP WIRELESS DIAL UP
	DATA OUTLET, RJ45	OCB	DRIVE THRU ORDER CONFIRMATION BOARD
	BUMP BAR	DPB	DRIVE THRU DIGITAL PREVIEW BOARD
		DPB	DRIVE THRU DIGITAL PREVIEW BOARD
		OTT VOIP	OTT VOICE OVER-IP VOIP (PHONE)

ALBERT TAUS
& ASSOCIATES, ARCHITECTS
ALBERT TAUS, A.I.A., ARCHITECT
ARCHITECTURE·PLANNING·INTERIOR DESIGN·ENGINEERING
PHILADELPHIA, PA
PHONE: (215) 698 - 2516 · FAX: (215) 698 - 7398
atausarchitects.com

THESE PLANS ARE THE PROPERTY OF ALBERT TAUS & ASSOCIATES, ARCHITECTS, AND ARE NOT TO BE USED WITHOUT THE EXPRESSED WRITTEN PERMISSION OR CONSENT OF ALBERT A. TAUS, R.A., A.I.A.

STATE OF MISSOURI
ALBERT A. TAUS
NUMBER
A-2015032715
ARCHITECT

SIGNATURE

DOCUMENTS PREPARED FOR
DDW21DOUGLAS, LLC
C/O: MR. HOSSAM SHAHIN
109 E. HALE LAKE RD
WARRENSBURG, MO 64093

ATA200602.10

DATE	04/16/21
SCALE	AS NOTED
DRAWN	
CKD	DJK
APPD	AAT

NO	DESCRIPTION	DATE
6		
5		
4		
3		
2		
1		
–	ISSUED FOR PERMIT	4-29-21

REVISIONS

THESE PLANS ARE CONFIDENTIAL PROPERTY OF DUNKIN' BRANDS INC. UNDER RESTRICTED ACCESS.

PROPOSED PROJECT
DUNKIN'
WITH DRIVE THRU
1100 NE DOUGLAS STREET
LEE'S SUMMIT MO. 64086
NEXT GEN (COOL PALAETTE)

ELECTRICAL COMMUNICATION SCHEDULES & NOTES

DUNKIN' BRANDS [eatdrinkthink]

E3.2

MUSIC SYSTEM NOTES

1) STEREO RECEIVER, SPEAKERS & SPEAKER PROVIDED BY OWNER, INSTALLED BY GC.
2) ALL CEILING SPEAKERS TO BE FLUSH MOUNTED.
   SALES AREA: FINISH BLACK
   VESTIBULE/ RESTROOMS: FINISH WHITE
3) MINIMUM QUANTITIES:
   SALES AREA: (2)
   RESTROOMS: (1) IN EACH
   VESTIBULE: (1)
4) HARDWARE TO BE INSTALLED IN THE OFFICE. FIELD VERIFY AND COORDINATE WITH FRANCHISEE FOR THE EXACT LOCATION OF THE UNIT AND VOLUME CONTROLS. PROVIDE SEPARATE VOLUME CONTROLS FOR EA AREA.
5) CONTACT DUNKIN' BRANDS RECOMMENDS FOR MUSIC & SYSTEM SUPPLIER CONTACT INFO.

MECHANICAL/HVAC NOTES

1. PROVIDE GAS FIRED HVAC SPLIT SYSTEMS (WITH THE INSTALLATION OF A NEW GAS SERVICE) AND LOCATION THE AHU'S IN THE ATTIC SPACE TO MATCH SIMILAR EXISTING CONDITION LOCATIONS.
2. PROVIDE CONDENSER UNITS (CU'S) TO MATCH SIMILAR EXISTING CONDITION LOCATIONS.
3. SEE MECHANICAL PLANS FOR MORE INFORMATION.

(#) KEY PLAN NOTES

1. GYPSUM WALL BOARD CEILING AND/OR SOFFIT.
2. HOT AIR CAPTURE EXHAUST HOOD FOR OVEN AND SANDWICH STATION BY GENERAL CONTRACTOR. PROVIDE A HEAT SENSOR OR OTHER DEVICE TO ENSURE THE AUTOMATIC OPERATION OF THE KITCHEN HOOD SYSTEMS UPON ACTIVATION OF THE COOKING DEVICES. PROVIDE A HEAT SENSOR OR OTHER DEVICE TO INSURE THE AUTOMATIC OPERATION OF THE KITCHEN HOOD SYSTEMS UPON ACTIVATION OF THE COOKING DEVICES.
3. "B" VENT FLUE FOR WATER HEATER.
4. DIGITAL MENU BOARDS (NOT SHOWN). SEE INTERIOR ELEVATIONS FOR MORE INFORMATION. COORDINATE EXACT POSITIONING AND LOCATION WITH DMB SUPPLIER. SEE ELECTRICAL PLANS AND INTERIOR ELEVATIONS FOR MORE INFORMATION. ALIGN WITH POS STATION AT FRONT LINE – MAINTAIN 2" CLEAR ON EACH END SO THE UNITS ARE ALLOWED TO VENT PROPERLY.
5. CANOPY. SEE EXTERIOR ELEVATIONS FOR MORE INFORMATION.
6. WIRE ALL NEW LIGHTING TO EXISTING ELECTRICAL PANEL AND PROVIDE SWITCH TO OPERATE IN EXISTING SWITCH BANK VERIFY LOCATION IN FIELD. TYPICAL FOR ALL LIGHT FIXTURES.
7. WALL WASH "A" LIGHTS TO BE CENTERED ON "LROD" PANEL ARTWORK. MOUNTED FLUSH WITH FINISH CEILING HEIGHT. SEE PLAN FOR CEILING HEIGHTS AND SEE INTERIOR ELEVATIONS FOR EXACT WALL LOCATION.
8. **NOT USED**
9. ORANGE LIGHT BAR MOUNTED AT 8'-7"A.F.F. TO ALIGN WITH FRONT OF CASEWORK BELOW. MOUNT SPECIFICATIONS VARY PER CEILING HEIGHT. SEE PLANS FOR MORE INFORMATION.
10. PROVIDE SUSPENDED ACOUSTICAL CLG. GRID THROUGHOUT ALL DROP CEILING AREAS (SEE PLANS). SEE CEILING FINISH SCHEDULE FOR MORE INFORMATION.(TYP)
11. **NOT USED**
12. EXISTING WALK-IN LIGHTS. SEE PLAN FOR MORE INFORMATION.
13. PROVIDE MOTION SENSOR TO ACTIVATE LIGHTING IN RESTROOM & OFFICE.
14. AIR CURTAIN. USE MARS LPV248-1EE6-OB, FINISH BLACK W/ DOOR SWITCH AT DELIVERY DOOR AND DRIVE THRU WINDOW. FURNISHED & INSTALLED BY CONTRACTOR. (HEATED MODEL W/ HEAT ON/OFF SWITCH) OR APPROVED EQUAL.
15. **NOT USED**
16. TRACK LIGHTING TO CENTERED ABOVE ARTWORK.

CEILING LEGEND

Symbol	Description	Symbol	Description
	2x4 LAY-IN LIGHT FIXTURE W/ OVERLAY (TYP.)		INTERIOR FLUSH CEILING SPEAKER
	2x2 LAY-IN LIGHT FIXTURE W/ OVERLAY (TYP.)	S	EXTERIOR SPEAKER
R1	LED RECESSED LIGHT FIXTURE	V	ADJUSTABLE SPEAKER VOLUME CONTROLS
	TRACK LIGHT	EBU-W	EMERGENCY REMOTE HEADS
A	WALL WASH FIXTURE	EBU-B	EMERGENCY REMOTE HEADS USED ON WT-02 WALL ONLY (BLACK)
LED 2	EXTERIOR LINEAR LED FIXTURE USED UNDER ORANGE BAND/CANOPY	EMR	EMERGENCY REMOTE HEAD.
WSCX-2	EXTERIOR WALL MTD LIGHT	EX1	COMBO EXIT
R4	ORANGE LIGHT BAR FIXTURE		GYPSUM BOARD CEILING
P1	INTERIOR LINEAR LED FIXTURE		2'x4' SUSPENDED CEILING GRID SYSTEM WITH 2' x 4' LAY-IN ACOUSTICAL CEILING TILES
LED 11	EXTERIOR LINEAR LED FIXTURE USED ABOVE ORANGE BEAM/ CANOPY		2'x2' SUSPENDED CEILING GRID SYSTEM WITH 2' x 2' LAY-IN ACOUSTICAL CEILING TILES
LED 12	EXTERIOR LINEAR LED FIXTURE USED ON TOP OF LOWER MONOLITH BAND		FLUE
	EXTERIOR WALL PACK LIGHT		RETURN/CEILING EXHAUST REGISTER. SEE MECHANICAL PLANS FOR MORE INFORMATION.
			SUPPLY AIR DIFFUSER-4 WAY. SEE MECHANICAL PLANS FOR MORE INFORMATION.
N/L	NIGHT LIGHT	EF-1	EXHAUST FAN FOR HOT AIR CAPTURE HOOD(S). SEE ELECTRICAL PLANS, MECHANICAL PLANS AND FAN SCHEDULE FOR MORE INFORMATION.
MS	WALL MOUNTED MOTION SENSOR	EF-2	EXHAUST FAN FOR HOT AIR CAPTURE HOOD(S). SEE ELECTRICAL PLANS, MECHANICAL PLANS AND FAN SCHEDULE FOR MORE INFORMATION.
J	JUNCTION BOX		
	DUSK TO DAWN TIMER	EF-3	EXHAUST FAN FOR RESTROOM(S). SEE ELECTRICAL PLANS, MECHANICAL PLANS AND FAN SCHEDULE FOR MORE INFORMATION.
	TIME CLOCK ON/OFF		

LIGHTING SCHEDULE

CODE	DESCRIPTION	MANUFACTURER	PRODUCT
A	WALL-WASH FIXTURE- TO BE USED AT ARTWORK AND LROD SIGN	CONTECH	RL20SA3-35K-12-D/ CTR2002CLR-P
B	PROVIDED BY WALK-IN BOX MANUF.	VARIES	VARIES
C	TRACK LIGHT & HEAD- USED @ WALL W/ ART WORK AND WHERE	JUNO	R600L-35K-BL
EBU-W	ULTRA COMPACT LED EMERGENCY UNIT (WHITE)	EXITRONIX	EBU-W-LED-51-52
EBU-B	ULTRA COMPACT LED EMERGENCY UNIT- USED ON WT-02 WALL ONLY (BLACK)	EXITRONIX	EBU-BL-LED-51-52
EMR	EXTERIOR COMBO LED REMOTE EXIST LIGHT HEAD- USED ABOVE OR ADJACENT TO EXIT DOORS (GRAY)	EXITRONIX	TYPE EMR EXITRONIX MLED-2-G-WP
EWS-1	WALL PACK (GRAY) EXTERIOR- USED ON DARK WALL FINSIH	WAC	WP-LED227-30-AWK-GRAY
EWS-2	WALL PACK (WHITE) EXTERIOR- USED ON LIGHT WALL FINISH	WAC	WP-LED227-30-AWK-WHITE
EX1	COMBO LED EXIT SIGN W/ LIGHT HEADS (WHITE)	EXITRONIX	VEX-U-BP-WB-WH-EL90
BL	BATHROOM SCONCE	SEAGULL	49170
LED 2	EXTERIOR RECESSED LIGHT FIXTURE- USED UNDER ORANGE BEAM/ CANOPY	DMF	DMF-DRDH-R-4/ DRD2M-10-9-40/ DRD2T-R-4-S-W
LED 11	EXTERIOR LIGHT FIXTURE- USED ABOVE ORANGE BEAM/ CANOPY	SOLID STATE LUMINARIES SOLUTIONS OF LIGHTING	LSSL-5165-N
LED 12	EXTERIOR LIGHT FIXTURE- USED ON TOP OF LOWER MONOLITH BAND	SOLID STATE LUMINARIES SOLUTIONS OF LIGHTING	SSL-LSSL-5165-400 LUMENS
OC	WALL MOUNTED OCCUPANCY SENSOR	WATTSTOPPER	WS-250-W
P1	8' SUSPENDED LINEAR LIGHT FIXTURE- USED IN SEATING/ SALES AREA	TEXAS FLUORESCENTS	SES-FR-96L-S62W6200L-DMV-35K-BK
P2	4' SUSPENDED LINEAR LIGHT FIXTURE- USED IN SEATING/ SALES AREA	TEXAS FLUORESCENTS	SES-FR-48L-S62W3100L-DMV-35K-BK
P3	PENDANT CHANDELIER- USED ABOVE COMMUNITY TABLE	TECH LIGHTING	700TD-ALVPMC-BB-LED90
PKL3	PARKING LOT LIGHTING	COOPER LIGHTING	LUMARK PRV-PREVAIL PRV-A40-UNV-T3-SA-BZ
PKL4	PARKING LOT LIGHTING	COOPER LIGHTING	LUMARK PRV-PREVAIL PRV-A40-UNV-T4-SA-BZ
R1	RECESSED LED LIGHT FIXTURE	HALO	PD620-D010-B/ PDM6B835/ 61VCWF
R2	2X2 LAY-IN TROFFER LED LIGHT FIXTURE, USED IN FRONT OF HOUSE	CREE	CR22-32L35K-S-EB14
R3	4" LED ADJ DOWNLIGHT, 400K, 200 LUMEN	NORA	NCH-436-L20-40-D-SF
R4	LED LINEAR LIGHT BAR- USED ABOVE FRONT LINE	PINNACLE ARCHITECTURAL LIGHTING	EX33A-35HO-XX-AC48JB-120-1C-CC-PMS165
R5	2X4 LAY-IN LED LIGHT FIXTURE, USED IN BACK OF HOUSE	LSI	SFP24-LED30-UE-DIM-35
R6	2X2 LAY-IN LED LIGHT FIXTURE, USED OVER SERVICE AREA - REMODELS ONLY	LSI	SFP22-LED30-UE-DIM-35
R7	2X4 LAY-IN TROFFER LED LIGHT FIXTURE, USED IN FRONT OF HOUSE - REMODELS ONLY	LSI	ELFP24 2X4
WSCX-2	EXTERIOR SIGN LIGHT FIXTURE - USED AT ACCENT PANELS	HI-LITE MFG INC.	H-HDMR16/18-1-119/ MR16AD1C293010T-10-S1

LIGHTING SCHEDULE NOTES

1. PROVIDE ALL FIXTURES COMPLETE WITH LAMPS. REFER TO NATIONAL ACCOUNT SOURCE INFO FOR LAMP SPECS & VILLA LIGHTING RE-LAMPING PROGRAM.
2. ALL BALLASTS SHALL BE HIGH POWER FACTOR.
3. PROVIDE HOLD-DOWN CLIPS FOR EACH CORNER OF FLUORESCENT GRID TROFFERS.
4. COORDINATE AND VERIFY ALL FIXTURE INFORMATION, TYPES AND FINAL LOCATIONS WITH THE REFLECTED CEILING PLAN.
5. LAMPS SHALL BE AS MANUFACTURED BY SYLVANIA, WESTINGHOUSE, GENERAL ELECTRIC OR APPROVED EQUAL.

GENERAL NOTES:

1. ALL EMERGENCY AND EXIT LIGHTING FIXTURES SHALL BE CONNECTED AHEAD OF ROOM / AREA SWITCHES PER NATIONAL ELECTRICAL CODE (NEC).

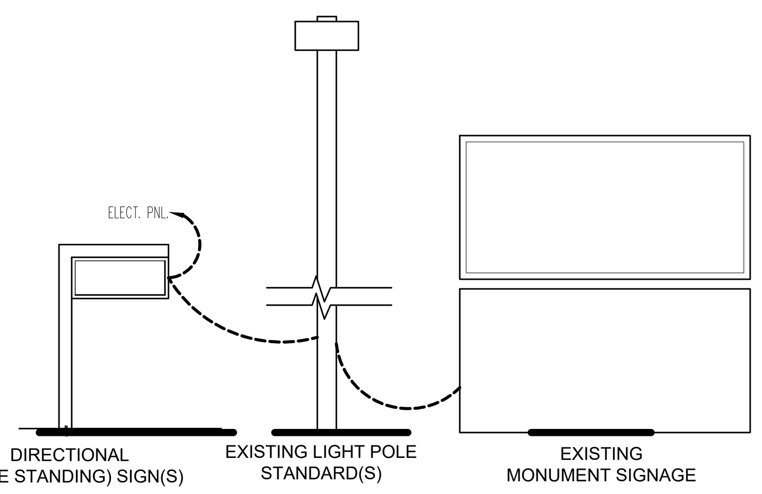

V.I.F. SEE SITE PLAN DRAWINGS FOR MORE INFORMATION AND EXACT QUANTITY AND LOCATION

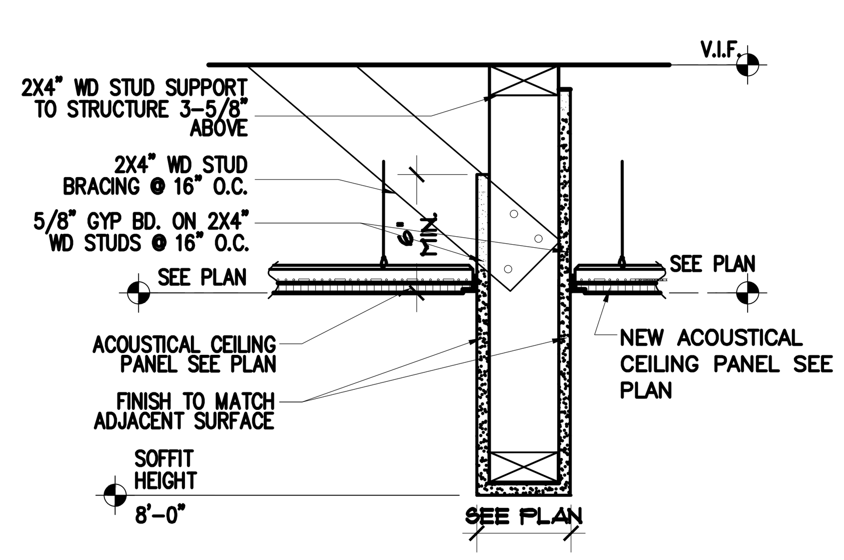

3 / A2.0 HEADER DETAIL
SCALE: NOT TO SCALE

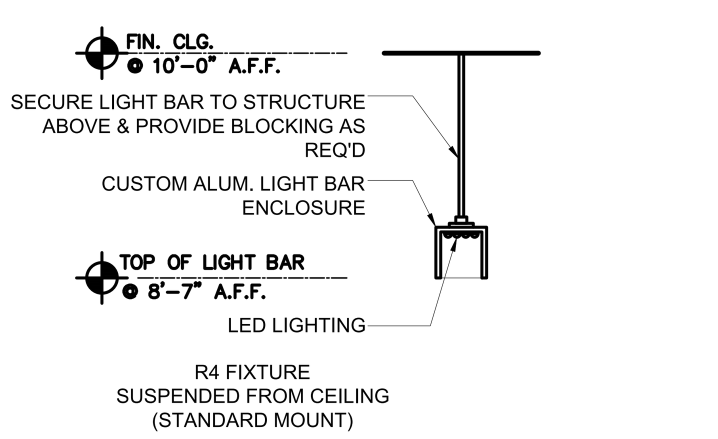

2 / A2.0 LIGHT BAR DETAIL - R4
SCALE: NOT TO SCALE

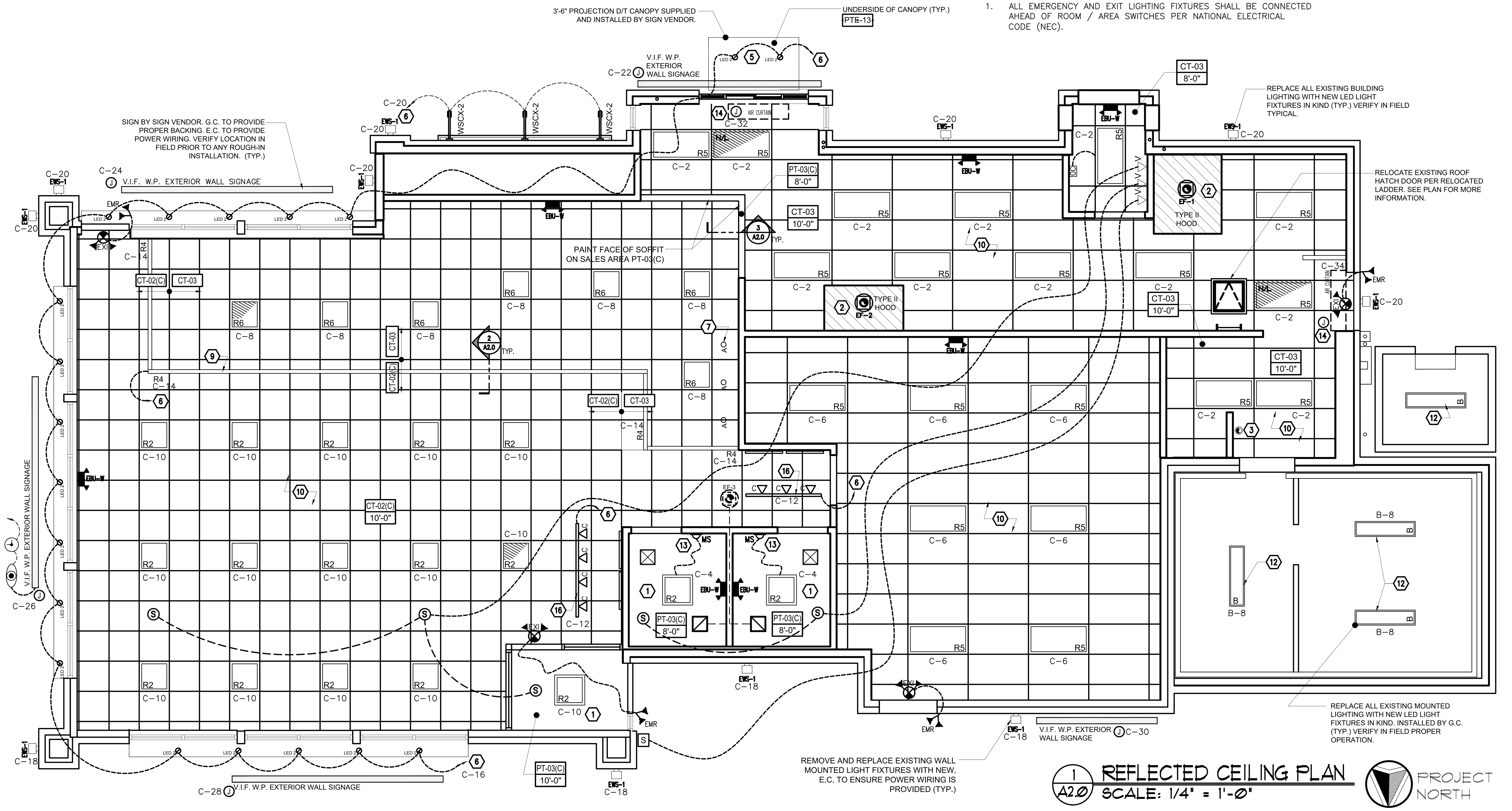

1 / A2.0 REFLECTED CEILING PLAN
SCALE: 1/4" = 1'-0"

ALBERT TAUS
& ASSOCIATES, ARCHITECTS
ALBERT TAUS, A.I.A., ARCHITECT
ARCHITECTURE·PLANNING·INTERIOR DESIGN·ENGINEERING
PHILADELPHIA, PA
PHONE: (215) 698 - 2516 . FAX: (215) 698 - 7398
atausarchitects.com

THESE PLANS ARE THE PROPERTY OF ALBERT TAUS & ASSOCIATES, ARCHITECTS, AND ARE NOT TO BE USED WITHOUT THE EXPRESSED WRITTEN PERMISSION OR CONSENT OF ALBERT A. TAUS, R.A., A.I.A.

STATE OF MISSOURI — ALBERT A. TAUS — NUMBER A-2015032715 — ARCHITECT

SIGNATURE

DOCUMENTS PREPARED FOR
DDW21DOUGLAS, LLC
C/O: MR. HOSSAM SHAHIN
109 E. HALE LAKE RD
WARRENSBURG, MO 64093

ATA200602.10

DATE	04/16/21
SCALE	AS NOTED
DRAWN	
CKD	DJK
APPD	AAT

REVISIONS

NO	DESCRIPTION	DATE
6		
5		
4		
3		
2		
1		
–	ISSUED FOR PERMIT	4-29-21

PROPOSED PROJECT
DUNKIN'
WITH DRIVE THRU
1100 NE DOUGLAS STREET
LEE'S SUMMIT MO. 64086
NEXT GEN (COOL PALAETTE)
ELECTRICAL LIGHTING PLAN & DETAILS

THESE PLANS ARE CONFIDENTIAL PROPERTY OF DUNKIN' BRANDS INC. UNDER RESTRICTED ACCESS.

DUNKIN' BRANDS [eatdrinkthink]

E4.1

PANEL: MDP

RATING: 120/208V, 3 PH, 4W, 600A CB

CKT. DESCRIPTION	WIRE & CONDUIT SIZE	POLE	LOAD VA	BKR. AMP	CIR. NO	PHASE A	PHASE B	PHASE C	CIR. NO	BKR. AMP	LOAD VA	POLE	WIRE & CONDUIT SIZE	CKT. DESCRIPTION
PANEL "A"	4#4/0+1#4G; 3"C	3	18,822	200	1	29,710			2	200	10,888	3	4#4/0+1#4G; 3"C	
			21,239		3		32,971		4		11,732			
			22,298		5			31,718	6		9,420			
PANEL "C"	4#4/0+1#4G; 3"C	3	11,820	200	7	14,604			8	45	2,784	3	3#6+1#10G; 1 1/4"C	
			12,820		9		15,604		10		2,784			
			10,500		11			13,284	12		2,784			
RTU-1	3#6+1#10G; 1 1/4"C	3	3,955	50	13	8,179			14	60	4,224	3	3#4+1#8G; 1 1/4"C	
			3,955		15		8,179		16		4,224			
			3,955		17			8,179	18		4,224			
COOLER COMPRESSOR	3#8+1#10G; 1"C	3	2,040	30	19	4,536			20	30	2,496	2	3#8+1#10G; 1"C	DUAL LANE
			2,040		21		4,536		22		2,496			
			2,040		23			5,035	24	30	2,995	2	3#8+1#10G; 1"C	TU
FREEZER COMPRESSOR	3#8+1#10G; 1"C	3	2,040	30	25	5,035			26		2,995			
			2,040		27		5,035		28	30	2,995	2	3#8+1#10G; 1"C	TU
			2,040		29			5,035	30		2,995			
EF-1	2#12+1#12G; 3/4"C	1	1,000	20	31	2,841			32	30	1,841	2	3#8+1#10G; 1"C	
EF-2	2#12+1#12G; 3/4"C	1	1,000	20	33		2,841		34		1,841			
EF-3	2#12+1#12G; 3/4"C	1	1,000	20	35			1,000	36					
SPARE					37	0			38					
SPARE					39		0		40					
SPARE					41			0	42					
				TOT.	CONN.	64,906	69,166	64,251	VA					

MOUNTING: SURFACE
PNL. SHORT CIR. RATING: 65 KAIC

TOT. CONN. 198,323 VA
TOT. CONN. 198 KVA
TOT. DEM 168 KVA
TOT. DEM 466 Amp at 208 V

DEMAND FACTOR
LIGHTING LOAD 125%
RECEPTACLE & MISCELLANEOUS 70%
HVAC LOAD 100%
KITCHEN LOAD 70%
PLUMBING 100%

PANEL NOTES:
1. PANEL SHORT CIRCUIT RATING SHALL MATCH OR EXCEED AVAILABLE SHORT-CIRCUIT CURRENT FROM UTILITY SERVICE.
2. FIELD VERIFIES ALL EQUIPMENT WITH MANUFACTURER PRIOR TO INSTALLED BREAKERS AND FEEDERS.
3. FIELD VERIFIES EXACT EQUIPMENT WITH OWNER.
4. PROVIDE AND INSTALL AS PER NEC CODE.

PANEL: A

RATING: 120/208V, 3 PH, 4W, 200A CB

CKT. DESCRIPTION	WIRE & CONDUIT SIZE	POLE	LOAD VA	BKR. AMP	CIR. NO	PHASE A	PHASE B	PHASE C	CIR. NO	BKR. AMP	LOAD VA	POLE	WIRE & CONDUIT SIZE	CKT. DESCRIPTION
SUNDAE STATION	2#12+1#12G; 3/4"C	1	1,800	20	1	2,300			2	20	500	1	2#12+1#12G; 3/4"C	EXPEDITOR VDU
WAFFLE CONE BAKER	2#12+1#12G; 3/4"C	1	1,800	20	3		2,840		4	20	1,040	2	3#12+1#12G; 3/4"C	ISLAND OASIS
DIP SERVER	2#12+1#12G; 3/4"C	1	1,800	20	5			2,840	6		1,040			
HOT TOPPING PUMP	2#12+1#12G; 3/4"C	1	1,800	20	7	3,600			8	20	1,800	1	2#12+1#12G; 3/4"C	BLENDER STATION
HOT TOPPING PUMP	2#12+1#12G; 3/4"C	1	1,800	20	9		3,600		10	20	1,800	1	2#12+1#12G; 3/4"C	BLENDER STATION
SUNDAE STATION	2#12+1#12G; 3/4"C	1	1,800	20	11			3,600	12	20	1,800	1	2#12+1#12G; 3/4"C	ELECTRICAL MENUBOARD
U.C. REF	2#12+1#12G; 3/4"C	1	840	20	13	1,056			14	20	216	1	2#12+1#12G; 3/4"C	DAIRY DISPENSER
CONVENIENCE OUTLET	2#12+1#12G; 3/4"C	1	500	20	15		716		16	20	216	1	2#12+1#12G; 3/4"C	DAIRY DISPENSER
MULTI-SWEETNER/DAIRY DISPEN.	2#12+1#12G; 3/4"C	1	1,080	20	17			1,920	18	20	840	1	2#12+1#12G; 3/4"C	REACH IN REF.
U.C. REF	2#12+1#12G; 3/4"C	1	840	20	19	1,880			20	20	1,040	2	3#12+1#12G; 3/4"C	ISLAND OASIS
EXPEDITOR VDU	2#12+1#12G; 3/4"C	1	500	20	21		1,540		22		1,040			
CONVENIENCE OUTLET	2#12+1#12G; 3/4"C	1	500	20	23			2,143	24	20	1,643	2	3#12+1#12G; 3/4"C	HOT CHOCOLATE
DAIRY DISPEN.	2#12+1#12G; 3/4"C	1	500	20	25	2,143			26		1,643			
TWIN BREWER STAND	3#6+1#10G; 1 1/4"C	2	4,004	50	27		6,500		28	30	2,496	2	3#8+1#10G; 1"C	COFFEE ART
			4,004		29			6,500	30		2,496			
DIPPING CABINET	2#12+1#12G; 3/4"C	1	1,800	20	31	4,296			32	30	2,496	2	3#8+1#10G; 1"C	COFFEE ART
DIPPING CABINET	2#12+1#12G; 3/4"C	1	1,800	20	33		4,296		34		2,496			
BAKERY CASE	2#12+1#12G; 3/4"C	1	1,800	20	35			3,547	36	20	1,747	2	3#12+1#12G; 3/4"C	TWIN BREWER
BAKERY CASE	2#12+1#12G; 3/4"C	1	1,800	20	37	3,547			38		1,747			
SPARE					39		1,747		40	20	1,747	2	3#12+1#12G; 3/4"C	TWIN BREWER
SPARE					41			1,747	42		1,747			
				TOT.	CONN.	18,822	21,239	22,298	VA					

MOUNTING: SURFACE
PNL. SHORT CIR. RATING: 65 KAIC

TOT. CONN. 62,359 VA
TOT. CONN. 62 KVA
TOT. DEM 44 KVA
TOT. DEM 121 Amp at 208 V

DEMAND FACTOR
LIGHTING LOAD 125%
RECEPTACLE & MISCELLANEOUS 70%
HVAC LOAD 100%
KITCHEN LOAD 70%
PLUMBING 100%

PANEL NOTES:
1. PANEL SHORT CIRCUIT RATING SHALL MATCH OR EXCEED AVAILABLE SHORT-CIRCUIT CURRENT FROM UTILITY SERVICE.
2. FIELD VERIFIES ALL EQUIPMENT WITH MANUFACTURER PRIOR TO INSTALLED BREAKERS AND FEEDERS.
3. FIELD VERIFIES EXACT EQUIPMENT WITH OWNER.
4. PROVIDE AND INSTALL AS PER NEC CODE.

PANEL: B

RATING: 120/208V, 3 PH, 4W, 200A CB

CKT. DESCRIPTION	WIRE & CONDUIT SIZE	POLE	LOAD VA	BKR. AMP	CIR. NO	PHASE A	PHASE B	PHASE C	CIR. NO	BKR. AMP	LOAD VA	POLE	WIRE & CONDUIT SIZE	CKT. DESCRIPTION
RESTROOM RECEPTACLE	2#12+1#12G; 3/4"C	1	500	20	1	740			2	20	240	1	2#12+1#12G; 3/4"C	COOLER AIR VENT
RESTROOM RECEPTACLE	2#12+1#12G; 3/4"C	1	500	20	3		740		4	20	240	1	2#12+1#12G; 3/4"C	COOLER AIR VENT
RESTROOM EHD	2#10+1#10G; 3/4"C	1	1,300	20	5			1,900	6	20	600	1	2#12+1#12G; 3/4"C	COOLER HEAT TRACE
RESTROOM EHD	2#10+1#10G; 3/4"C	1	1,300	20	7	1,900			8	20	600	1	2#12+1#12G; 3/4"C	COOLER/FREEZER LIGHT
RESTROOM J-BOX	2#12+1#12G; 3/4"C	1	1,300	20	9		1,540		10	20	240	1	2#12+1#12G; 3/4"C	FREEZER AIR VENT
CONVENIENCE OUTLET	2#12+1#12G; 3/4"C	1	500	20	11			740	12	20	240	1	2#12+1#12G; 3/4"C	FREEZER AIR VENT
EXPEDITOR VDU	2#12+1#12G; 3/4"C	1	500	20	13	1,100			14	20	600	1	2#12+1#12G; 3/4"C	FREEZER HEAT TRACE
PRINTER DATA POWER	2#12+1#12G; 3/4"C	1	500	20	15		1,000		16	20	500	1	2#12+1#12G; 3/4"C	CONDENSATE DRAIN
POS TERMINAL	2#12+1#12G; 3/4"C	1	500	20	17			1,500	18	20	1,000	1	2#12+1#12G; 3/4"C	BELL SYSTEM
POS TERMINAL	2#12+1#12G; 3/4"C	1	500	20	19	1,500			20	20	1,000	1	2#12+1#12G; 3/4"C	BUG LIGHT
U.C. REF	2#12+1#12G; 3/4"C	1	840	20	21		1,840		22	20	1,000	1	2#12+1#12G; 3/4"C	BOOSTER PUMP
STATION HYBRID	2#12+1#12G; 3/4"C	1	480	20	23			1,480	24	20	1,000	1	2#12+1#12G; 3/4"C	CEILING RECEPTACLE
STATION HYBRID	2#12+1#12G; 3/4"C	1	1,248	20	25	2,248			26	20	1,000	1	2#12+1#12G; 3/4"C	CEILING RECEPTACLE
HOLDING CABINETS	2#10+1#10G; 3/4"C	1	1,800	30	27		2,700		28	20	900	1	2#12+1#12G; 3/4"C	SEATING RECEPTACLE
EXPEDITOR VDU	2#12+1#12G; 3/4"C	1	500	20	29			1,220	30	20	720	1	2#12+1#12G; 3/4"C	TRAINING RM RECEPTACLE
PRINTER DATA POWER	2#12+1#12G; 3/4"C	1	500	20	31	1,400			32	20	900	1	2#12+1#12G; 3/4"C	KITCHEN RECEPTACLE
TAP SYSTEM	2#12+1#12G; 3/4"C	1	1,332	20	33		3,412		34	30	2,080	2	3#8+1#10G; 1"C	ICE COFFEE BREWER
KITCHEN RECEPTACLE	2#12+1#12G; 3/4"C	1	500	20	35			2,580	36		2,080			
KIOSK	2#12+1#12G; 3/4"C	1	1,000	20	37	2,000			38	20	1,000	1	2#12+1#12G; 3/4"C	TANKLESS WATER HEATER
ROOFTOP RECEPTACLE	2#12+1#12G; 3/4"C	1	500	20	39		500		40					SPARE
SPARE					41			0	42					SPARE
				TOT.	CONN.	10,888	11,732	9,420	VA					

MOUNTING: SURFACE
PNL. SHORT CIR. RATING: 65 KAIC

TOT. CONN. 32,040 VA
TOT. CONN. 32 KVA
TOT. DEM 23 KVA
TOT. DEM 65 Amp at 208 V

DEMAND FACTOR
LIGHTING LOAD 125%
RECEPTACLE & MISCELLANEOUS 70%
HVAC LOAD 100%
KITCHEN LOAD 70%
PLUMBING 100%

PANEL NOTES:
1. PANEL SHORT CIRCUIT RATING SHALL MATCH OR EXCEED AVAILABLE SHORT-CIRCUIT CURRENT FROM UTILITY SERVICE.
2. FIELD VERIFIES ALL EQUIPMENT WITH MANUFACTURER PRIOR TO INSTALLED BREAKERS AND FEEDERS.
3. FIELD VERIFIES EXACT EQUIPMENT WITH OWNER.
4. PROVIDE AND INSTALL AS PER NEC CODE.

PANEL: C

RATING: 120/208V, 3 PH, 4W, 200A CB

CKT. DESCRIPTION	WIRE & CONDUIT SIZE	POLE	LOAD VA	BKR. AMP	CIR. NO	PHASE A	PHASE B	PHASE C	CIR. NO	BKR. AMP	LOAD VA	POLE	WIRE & CONDUIT SIZE	CKT. DESCRIPTION
COMM RECEPTACLE	2#12+1#12G; 3/4"C	1	720	20	1	1,720			2	20	1,000	1	2#12+1#12G; 3/4"C	KITCHEN LIGHT
COMM RECEPTACLE	2#12+1#12G; 3/4"C	1	720	20	3		1,720		4	20	1,000	1	2#12+1#12G; 3/4"C	BATHROOM LIGHT
COMM RECEPTACLE	2#12+1#12G; 3/4"C	1	500	20	5			1,500	6	20	1,000	1	2#12+1#12G; 3/4"C	KITCHEN LIGHT
COMM RECEPTACLE	2#12+1#12G; 3/4"C	1	500	20	7	1,500			8	20	1,000	1	2#12+1#12G; 3/4"C	COUNTER LIGHT
COMM RECEPTACLE	2#12+1#12G; 3/4"C	1	500	20	9		1,500		10	20	1,000	1	2#12+1#12G; 3/4"C	SEATING LIGHT
COMM RECEPTACLE	2#12+1#12G; 3/4"C	1	500	20	11			1,500	12	20	1,000	1	2#12+1#12G; 3/4"C	TRACK LIGHT
COMM RECEPTACLE	2#12+1#12G; 3/4"C	1	500	20	13	1,500			14	20	1,000	1	2#12+1#12G; 3/4"C	TRACK LIGHT
COMM RECEPTACLE	2#12+1#12G; 3/4"C	1	500	20	15		1,500		16	20	1,000	1	2#10+1#10G; 3/4"C	OUTDOOR LIGHT
WORK TABLE	2#12+1#12G; 3/4"C	1	500	20	17			1,000	18	20	500	1	2#10+1#10G; 3/4"C	OUTDOOR LIGHT
WORK TABLE	2#12+1#12G; 3/4"C	1	500	20	19	1,000			20	20	500	1	2#10+1#10G; 3/4"C	OUTDOOR LIGHT
COMM RECEPTACLE	2#12+1#12G; 3/4"C	1	500	20	21		1,700		22	20	1,200	1	2#10+1#10G; 3/4"C	SIGN
COMM RECEPTACLE	2#12+1#12G; 3/4"C	1	500	20	23			1,700	24	20	1,200	1	2#10+1#10G; 3/4"C	SIGN
COMM RECEPTACLE	2#12+1#12G; 3/4"C	1	500	20	25	1,700			26	20	1,200	1	2#10+1#10G; 3/4"C	SIGN
LIGHT POLE	2#10+1#10G; 3/4"C	1	800	20	27		2,000		28	20	1,200	1	2#10+1#10G; 3/4"C	SIGN
LIGHT POLE	2#10+1#10G; 3/4"C	1	800	20	29			2,000	30	20	1,200	1	2#10+1#10G; 3/4"C	SIGN
LIGHT POLE	2#10+1#10G; 3/4"C	1	800	20	31	1,800			32	20	1,000	1	2#12+1#12G; 3/4"C	AIR CURTAIN
LIGHT POLE	2#10+1#10G; 3/4"C	1	800	20	33		1,800		34	20	1,000	1	2#12+1#12G; 3/4"C	AIR CURTAIN
LIGHT POLE	2#10+1#10G; 3/4"C	1	800	20	35			2,000	36	20	1,200	1	2#12+1#12G; 3/4"C	DOUBLE STACK OVEN
MONUMENT SIGN	2#10+1#10G; 3/4"C	1	800	20	37	1,800			38	20	1,000	1	2#10+1#10G; 3/4"C	SPEAKER TOWER
DIRECTIONAL SIGN	2#10+1#10G; 3/4"C	1	800	20	39		1,800		40	20	1,000	1	2#10+1#10G; 3/4"C	DRIVE THRU MENUBOARD
DIRECTIONAL SIGN	2#10+1#10G; 3/4"C	1	800	20	41			800	42					SPARE
DIRECTIONAL SIGN	2#10+1#10G; 3/4"C	1	800	20	43	800			44					SPARE
DIRECTIONAL SIGN	2#10+1#10G; 3/4"C	1	800	20	45		800		46					SPARE
SPARE					47			0	48					SPARE
SPARE					49	0			50					SPARE
SPARE					51		0		52					SPARE
SPARE					53			0	54					SPARE
SPARE					55	0			56					SPARE
SPARE					57		0		58					SPARE
SPARE					59			0	60					SPARE
				TOT.	CONN.	11,820	12,820	10,500	VA					

MOUNTING: SURFACE
PNL. SHORT CIR. RATING: 65 KAIC

TOT. CONN. 35,140 VA
TOT. CONN. 35 KVA
TOT. DEM 38 KVA
TOT. DEM 107 Amp at 208 V

DEMAND FACTOR
LIGHTING LOAD 125%
RECEPTACLE & MISCELLANEOUS 70%
HVAC LOAD 100%
KITCHEN LOAD 70%
PLUMBING 100%

PANEL NOTES:
1. PANEL SHORT CIRCUIT RATING SHALL MATCH OR EXCEED AVAILABLE SHORT-CIRCUIT CURRENT FROM UTILITY SERVICE.
2. FIELD VERIFIES ALL EQUIPMENT WITH MANUFACTURER PRIOR TO INSTALLED BREAKERS AND FEEDERS.
3. FIELD VERIFIES EXACT EQUIPMENT WITH OWNER.
4. PROVIDE AND INSTALL AS PER NEC CODE.

1 ELECTRICAL PANEL SCHEDULES

ELECTRICAL RISER DIAGRAM NOTES

1. ELECTRICAL CONTRACTOR SHALL FIELD VERIFY EXISTING SWITCHBOARD LOCATION PRIOR TO SUBMIT ELECTRICAL BID.
2. ALL NEW CIRCUIT BREAKERS BEING INSTALLED IN EXISTING SWITCHBOARD AND PANELBOARDS SHALL MATCH THE CHARACTERISTICS IN ALL RESPECTS OF THE EXISTING CIRCUIT BREAKERS.
3. THE ELECTRICAL CONTRACTOR SHALL REVIEW AND COORDINATE HIS WORK WITH ALL EQUIPMENT OF OTHER TRADES INDICATED ON THE DRAWINGS. THE ELECTRICAL CONTRACTOR SHALL FURNISH AND INSTALL OVER CURRENT PROTECTION TO MEET THE ACTUAL NAMEPLATE REQUIREMENTS OF ALL MECHANICAL EQUIPMENT AND OTHER DEVICES. THE ELECTRICAL CONTRACTOR SHALL ASSIST IN THE INSTALLATION OF MECHANICAL EQUIPMENT AS REQUIRED BY LOCAL WORK RULES.
4. ELECTRICAL CONTRACTOR MUST INFORM FACILITY MAINTENANCE BEFORE PROCEEDING WITH ANY ELECTRICAL "HOT" WORK ON TIE-INS.
5. ALL WORK SHALL BE IN ACCORDANCE WITH NATIONAL ELECTRIC CODE, O.S.H.A. LATEST EDITIONS, AND ALL APPLICABLE LOCAL CODES.
6. COORDINATE EXACT LOCATION OF ALL FIXTURES AND OUTLETS WITH ARCHITECT DRAWINGS AND EQUIPMENT SUPPLIER'S RECOMMENDATIONS. REVIEW LOCATION OF ALL RACEWAYS WITH ARCHITECT/OWNER.
7. PROVIDE ALL GROUNDING AS REQUIRED BY N.E.C. OR ANY LOCAL CODES.
8. CONTRACTOR SHALL VISIT SITE TO FAMILIARIZE HIM WITH ALL CONDITIONS OF AREA.
9. CONTRACTOR SHALL PROVIDE TEMPORARY POWER AND LIGHT DURING COURSE OF CONSTRUCTION. POWER CONSUMED SHALL BE PAID FOR BY THE OWNER.
10. ALL WIRING INSTALLED UNDER THIS CONTRACT, PRIOR TO TURNING THE WORK AS A COMPLETE UNIT, SHALL BE TESTED FOR PROPER CONNECTIONS, SHORT CIRCUITS AND GROUNDS.
11. ALL WORK SHALL BE GUARANTEED FOR A PERIOD OF ONE YEAR FROM DATE OF ACCEPTANCE BY ARCHITECT/OWNER.
12. COORDINATE INTERRUPTING CAPACITY OF ELECTRICAL PANELS AND ALL BREAKERS WITH UTILITY COMPANY. PROVIDE TYPE WRITTEN DIRECTORIES FOR ALL PANELS PER CIRCUIT USAGE.
13. CONTRACTOR SHALL DO CUTTING, DRILLING AND PATCHING TO A LIKE CONDITION, AS APPROVED BY ARCHITECT FOR INSTALLATION OF HIS WORK. PROVIDE FIREPROOFING COMPOUND ON ALL CONDUITS PASSING THROUGH FIRE RATED PARTITIONS.
14. CONTRACTOR TO REMOVE AND REINSTALL ALL CEILING TILES AS REQUIRED FOR THE INSTALLATION OF HIS WORK. REPLACE ALL CEILING TILES BROKEN DURING REMOVAL.
15. DURING CONSTRUCTION, CONTRACTOR SHALL REMOVE ALL DEBRIS AND STORE AT LOCATION AS DIRECTED BY OWNER. NO ITEMS SHALL BE LEFT AS TO CAUSE HAZARD DURING WORKING HOURS. COORDINATE WITH OWNER AREAS THAT WORK CAN BE DONE IN.
16. ELECTRICAL CONTRACTOR SHALL BE RESPONSIBLE FOR COORDINATE ALL EXISTING PANEL LOCATIONS. IF THE EXISTING PANEL IS TO REMAIN & RENAME AS SHOWN ON FLOOR PLAN. ELECTRICAL CONTRACTOR SHALL FURNISH & INSTALL NEW CIRCUIT BREAKERS AS REQUIRED. NEW BREAKERS MUST MATCH EXISTING PANELS CHARACTERISTIC.
17. PROVIDE AND INSTALL AS PER N.E.C. CODE/PROVIDE AND INSTALL AS PER UTILITY COMPANY.
18. PROVIDE ALTERNATE PRICE FOR NEW ELECTRICAL EQUIPMENT.
19. CONTRACTOR HAS OPTION TO REUSE EXISTING PANEL IF IT IS IN COMPLIANCE WITH N.E.C. CODE.
20. REMOVE UNUSED EXISTING PANELS AND UNUSED WIRING AS PER N.E.C. CODE.
21. DURING THE CONSTRUCTION AND PRIOR TO INSTALLATION LICENSED ELECTRICIAN WILL SUBMIT ACTUAL LOAD FOR EACH PHASE EXISTING MDP AND KAIC RATING TO ELECTRICAL INSPECTOR AND ENGINEER FOR REVIEW AND APPROVAL. NEW PANELS WILL BE PURCHASED BASED UPON ACTUAL KAIC RATING REQUIREMENT.
22. PANELS: BALANCE PANEL LOAD FOR EACH PHASES, A, B & C. ALLOW FOR RELOCATING CIRCUITS WITHIN PANEL BOARD TO BALANCE THE LOAD.
23. TEST: UPON COMPLETION AND IMMEDIATELY PRIOR TO FINAL INSPECTION AND TAKEOVER, CHECK LOAD BALANCE ON ALL FEEDERS AND AT DISTRIBUTION CENTERS, PANELS, ETC. TEST TO BE CARRIED OUT BY TURNING ON ALL POSSIBLE LOADS AND CHECKING LOAD CURRENT BALANCE. IF LOAD UNBALANCE EXCEEDS 15%, RECONNECT CIRCUITS TO BALANCE LOAD.
24. E.C. TO VERIFY EXISTING ELECTRICAL LOAD/DEMAND IN FIELD PRIOR TO ROUGH IN. CONTACT ENGINEER IF THERE ARE DISCREPANCY OR HARDSHIPS UPON FIELD INSPECTION.
25. ELECTRICAL SERVICE OF 400 AMPS AND ABOVE, PROVIDE C/T CABINET.

ALL WORK SHALL BE IN ACCORDANCE WITH NATIONAL ELECTRICAL CODE, O.S.H.A. LATEST EDITIONS, AND ALL APPLICABLE LOCAL CODES

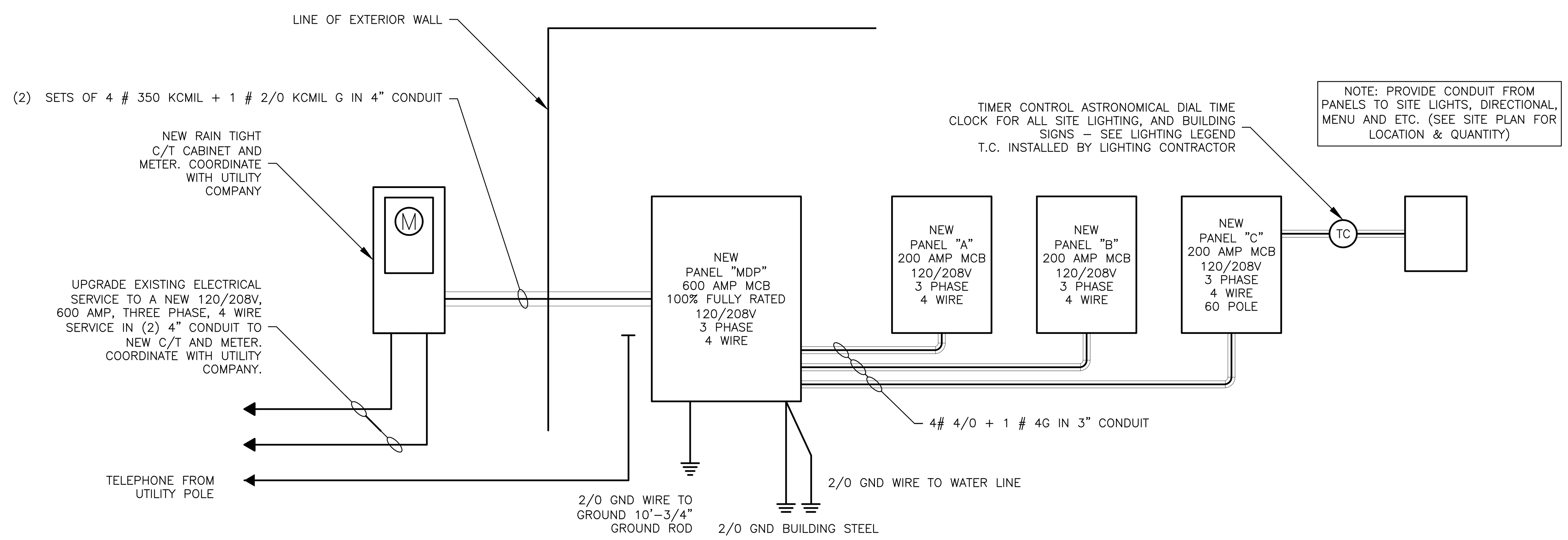

2 ELECTRICAL RISER DIAGRAM

SCALE: NONE

ALBERT TAUS & ASSOCIATES, ARCHITECTS
ALBERT TAUS, A.I.A., ARCHITECT
ARCHITECTURE·PLANNING·INTERIOR DESIGN·ENGINEERING
P H I L A D E L P H I A, P A
PHONE: (215) 698 - 2516 · FAX: (215) 698 - 7398
atausarchitects.com

THESE PLANS ARE THE PROPERTY OF ALBERT TAUS & ASSOCIATES, ARCHITECTS, AND ARE NOT TO BE USED WITHOUT THE EXPRESSED WRITTEN PERMISSION OR CONSENT OF ALBERT A. TAUS, R.A., A.I.A.

STATE OF MISSOURI
ALBERT A. TAUS
NUMBER A-2015032715
ARCHITECT
SIGNATURE

DOCUMENTS PREPARED FOR
DDW21DOUGLAS, LLC
C/O: MR. HOSSAM SHAHIN
109 E. HALE LAKE RD
WARRENSBURG, MO 64093

ATA200602.10

DATE	04/16/21
SCALE	AS NOTED
DRAWN	
CKD	DJK
APPD	AAT

NO	DESCRIPTION	DATE
6		
5		
4		
3		
2		
1		
-	ISSUED FOR PERMIT	4-29-21

REVISIONS

THESE PLANS ARE CONFIDENTIAL PROPERTY OF DUNKIN' BRANDS INC. UNDER RESTRICTED ACCESS.

PROPOSED PROJECT
DUNKIN'
WITH DRIVE THRU
1100 NE DOUGLAS STREET
LEE'S SUMMIT MO. 64086
NEXT GEN (COOL PALAETTE)
ELECTRICAL SCHEDULES & RISER DIAGRAM

DUNKIN' BRANDS [eatdrinkthink]

E5.1

ELECTRICAL SPECIFICATIONS
DIVISION 16 - ELECTRIC
16100.01 DEFINITIONS

A. Instructions in specification or on drawings such as PROVIDE shall mean that the electrical contractor shall furnish and install the item, equipment, wiring, etc., complete with all details. N.E.C. is NATIONAL ELECTRICAL CODE. N.E.S.C. is NATIONAL ELECTRICAL SAFETY CODE. OSHA is OCCUPATIONAL SAFETY AND HEALTH ADMINISTRATION. IBC is BUILDING OFFICIALS AND CODE. ADMINISTRATION. NFPA is NATIONAL FIRE PROTECTION ASSOCIATION. CONTRACTOR where used means electrical contractor responsible for work under this section. OWNER where used shall refer to either the landlord or the tenant.

16100.02 DRAWINGS AND SPECIFICATIONS

A. Drawings and specifications are complementary to each other and what is called for by one shall be as if called for by both.

B. Electrical drawings are diagrammatic and indicate general design, layout, and arrangement of equipment and various systems. However, being diagrammatic the drawings do not necessarily show all details such as junction boxes, pull boxes, conduit runs or sizes, wiring, etc. necessary for a complete and operable system.

C. Do not scale drawings for dimensions.

D. All dimensions and measurements shall be taken from architectural drawings and actual equipment to be furnished. The exact locations of apparatus, fixtures, equipment, conduits, outlets, receptacles, lighting fixtures, etc. shall be ascertained from the OWNER representative in the field, and the work shall be laid out accordingly. The CONTRACTOR shall verify and be responsible for all measurements taken in the field. Should the CONTRACTOR fail to ascertain the above locations, the work shall be changed at his own expense when so ordered by OWNER.

E. OWNER reserves the right to make minor changes in the location of conduit and equipment up to the time of installation, without additional cost.

F. Study and review all contract documents including drawings and specifications for architectural, structural, mechanical, and other portions of the work to avert possible installation conflicts. Adjust electrical work to conform to all conditions indicated therein.

G. Should conflicts arise which require changes in the contract documents, notify OWNER. Secure written approval and agreement on necessary adjustments before the bidding.

H. Discrepancies between drawings, between drawings and specifications, or between drawings and actual field conditions, or errors on either drawings or specifications shall be promptly brought to the attention of Architect and OWNER for a decision before the specific bidding.

16100.03 EXAMINATION OF PROJECT SITE

A. Prior to bidding examine the site carefully and be fully familiar with existing conditions and be fully informed of all utility, state and local requirements and regulations.

16100.04 EXISTING CONDUITS, PIPES, EQUIPMENT, ETC.

A. (Refer to General Specifications for additional requirements). Existing conduits, pipes, utility lines, tanks, equipment or other constructions are not in general indicated on drawings. Locate such obstructions prior to start of work and plan work so as to route and locate all new work to avoid these obstructions. Repair or replace existing installations where damaged during the course of construction.

16100.05 PERMITS, FEES, TAXES AND ROYALTIES

A. Arrange and pay for all necessary permits, fees, taxes, and royalties in connection with electrical work.

16100.06 CODES AND REGULATIONS

A. Comply with the latest applicable requirements of the NEC, NESC, OSHA, the NFPA, and the local Electrical Inspection Authority who shall have final jurisdiction. Comply also with all requirements of local utility and telephone companies.

B. Report to the engineer prior to submitting bids, any part or portion of the electrical design which does not conform to the requirements of the applicable local or state codes or requirements of local utility or telephone companies, otherwise be held responsible to provide installation which will comply with these codes and regulations.

C. Applicable codes and ordinances and local interpretations are to take precedence when they conflict with or are more stringent than the electrical design. Drawings and specifications take precedence where design is more stringent than codes and ordinances.

16100.07 STANDARDS

A. Materials and installation shall also conform to latest standards and practices of the Institute of Electrical and Electronic Engineers (IEEE), the National Electrical Manufacturers Association (NEMA), Insulated Power Cable Engineers Association (IPCEA), American National Standards Institute (ANSI), American Society of Testing Materials (ASTM), and the National Bureau of Standards.

B. The foregoing rules, standards, and regulations shall not relieve the contractor from furnishing and installing higher grades of materials and workmanship which are specified herein or indicated on drawings.

16100.08 PROGRESS OF WORK

A. Schedule the progress of work so as to conform to the schedule of the work of other trades. Complete the entire electrical installation in accordance with schedules as determined for the general completion of the entire building. Cooperate with all other trades so that the installation of all electrical outlets may be properly coordinated and located.

B. Carefully check the location of outlet boxes after the installation of materials and equipment by other trades. Any cost resulting from defective or ill-timed work performed under this division of the specifications shall be borne by this contractor under this section.

16100.09 PRODUCT DATA AND SUBMITTALS

A. Furnish product data and submittals for review by Architect and OWNER prior to installation.

B. Furnish detailed and dimensioned product data, submittals, and shop drawings for all electrical distribution equipment, lighting fixtures and lamps, special equipment, special systems, and special apparatus which are to be provided for installation in this work.

C. Include catalog cuts, dimensional and operating data, wiring diagrams for special systems, and such other data as may be required by Architect Contractor shall review these submittals prior to submission for review. Do not order equipment prior to review of Architect and OWNER. Submit samples of equipment when so requested by Architect and OWNER.

16100.10 MINOR DEVIATIONS AND CHANGES

A. Furnish and install entire electrical installations as designed and in accordance with contract drawings and specifications. Minor deviations necessitated by field conditions or equipment being supplied may be made upon approval of Architect and OWNER. Changes in design and installation shall be done in the manner provided for in the GENERAL CONDITIONS.

16100.11 CUTTING AND REPAIRING

A. Provide all cutting, patching, channeling, core drilling, etc., in building structure necessary for electrical work. Locate holes to be drilled, outlets, etc., coordinate work with all other trades on the job, and make arrangements for necessary openings and chases. Seal all holes cut for wiring runs.

B. No cutting, channeling, core drilling, etc., shall be done without prior approval of the architect. Make necessary repairs to finished building where patching or refinishing is necessary due to electric work. Actual work involved in these repairs shall be done by skilled craftsmen in the trades involved.

16100.12 MATERIALS

A. Furnish and install all material, equipment, and devices which are new, first quality, bear the listed label of the Underwriters Laboratories, Inc. and which are accepted by Architect and OWNER for installation in this project.

B. Replace, in a manner accepted by Architect and OWNER, and pay for all equipment or materials damaged in the course of installation or testing.

C. Basic bid shall include manufacturers and catalog numbers as shown in these specifications or on the drawings with NO EQUALS unless specifically indicated. Specified materials, equipment, and devices shall be furnished and installed under the contract unless changed by mutual agreement between contractor and Architect and OWNER

D. Where several manufacturers are indicated for material, equipment, or devices, contractor shall have the choice of manufacturers listed, but must indicate which is to be used. Equipment of other manufacturers which is equal to or superior than that specified may be proposed in accordance with the General Specification Manufacturers and catalog numbers shown in these specifications or on the drawings followed by OR EQUAL are intended as a guide to quality.

E. Substitute equipment of other manufacturers which is equivalent to or superior than that specified may be proposed. However, such substitutions must be accepted in writing by Architect and OWNER prior to bidding. If substitutions are not requested or granted, the specified materials and equipment must be installed. The decision of OWNER regarding substitutions shall be final.

F. It shall be the electrical contractors responsibility under this section of the specification to notify all related trades of the accepted substitutions and to assume full responsibility for all costs caused as a result of the substitution. prior to start of work, submit to Architect and OWNER a complete list of types, materials, and equipment and manufacturers of these items which are to be furnished for this work.

G. Copper wire must be used. Aluminum wire will not be accepted.

H. Equipment and materials must comply with the requirements of the Utility Company, and where required shall be submitted to them for their approval.

16100.13 PROJECT RECORD DOCUMENTS

A. Hold one set of electrical drawings and specifications on job site and keep up to date with project record data and revisions. Do not use this set for construction. Locate all underground runs including service entrances and feeders, and circuits exterior to building. Upon completion of work, furnish OWNER with one set of marked up mylar sepias of the electrical drawings showing project record installation.

16100.14 OPERATING INSTRUCTIONS AND MANUALS

A. At completion of project provide the OWNER with two sets of written instructions and manuals including manufacturers certificates of warranty, shop drawings, wiring diagrams, and parts lists of all systems and equipment installed. Bind separately in 3-ring binders with hard covers. Indicate to OWNER location and operation of distribution equipment and panel boards. Provide direct instruction to OWNER's representative for operation and maintenance of special systems.

16100.15 GUARANTEE

A. Furnish to OWNER a formal guarantee covering entire electrical system including equipment provided by Others and installed by electrical Contractor, to be free from defective materials and workmanship for a period of one year after date of acceptance of installation by OWNER. During this period provide all labor and new materials where required to repair or replace all defects to the satisfaction of OWNER at no additional cost.

16100.16 FINAL ACCEPTANCE AND WORK CLOSE-OUT

A. Contractor shall inspect the entire electrical installation to assure that all work is completed and all systems are completely operational before calling for a final acceptance of the work. All certificates including acceptance of local inspection authority must be presented at that time.

16100.17 BASIC MATERIALS AND METHODS

A. Furnish and install the basic materials, equipment, and devices for the electrical installation as indicated on the drawings and specified herein.

16100.18 DELIVERY AND STORAGE OF MATERIALS

A. Make own provisions for the delivery and safe storage of materials and equipment. Make arrangements for introduction into the building of equipment too large to pass through finished openings. Arrange to have materials delivered to the job at such stages of the work as will expedite the work as a whole. Mark materials and store in such a manner as to be easily checked or inspected.

B. Store all materials and equipment out of the weather and mechanically protect from damage, theft, and vandalism.

C. Where materials are indicated to be furnished by others for installation by the electrical contractor, make a complete and careful check of all materials delivered and furnish a receipt acknowledging acceptance, assume full responsibility for the safe-keeping of same until such time as the completed installation has been accepted.

16100.19 CLEANING AND PAINTING

A. In general, except where specified otherwise herein, finish painting of conduits, boxes, poles, and equipment where specified to be done in field, shall be done by other trades under another section of the specifications. Protect electrical apparatus, cabinets, boxes, and all other equipment normally furnished on the job with factory applied finish, either painted or galvanized, during storage and installation. Clean all electrical equipment, such as lighting fixtures, lamps, switchboards, panelboards, transformers, etc., of construction dirt, drill chips, debris, dust, paint smears, etc., before completion of work. Clean or touch-up and repaint all scars, blemishes, rust spots, etc., to original state of finish.

16100.20 TRENCHING AND BACK FILL

A. Provide all trenching and back filling required for electrical work.

16100.21 SCOPE OF WORK

A. Work under this Contract comprises the providing of all labor, material, equipment, transportation, scaffolding, rigging, tools and related items and subcontract work for a complete operating electrical system and includes but is not limited to:

Removals, alterations, relocations and connections to existing systems.
Temporary light and power.
Cutting and patching.
Shop drawings.
Testing and adjustments.
Cleaning and painting.
Low Voltage Feeders.
Light and Power Distribution Panels.

Motor Branch Circuit Wiring.
Lighting Branch Circuit Wiring.
Connections to Equipment Furnished by Others.
Lighting Fixtures and Lamps.
Receiving, handling, setting and connecting all motors, motor driven equipment and controls specified to be provided by the Owner.

Miscellaneous Signal and Control Systems.
Plumbing and heating, ventilation and air conditioning wiring, including control wiring.
Emergency electric systems, equipment and lighting,

B. Items mentioned in the above schedule are listed for the purpose of describing basic specification contents and shall not be construed as relieving the Contractor from executing any work described throughout the specification or indicated on drawings because of its detailed omission in this schedule.

16100.22 SHOP DRAWINGS AND MANUFACTURER'S SUPERVISION REQUIRED

A. Provide shop drawings for the following prior to fabrication, including all accessories and manufacturer's supervision where indicated:

Electrical Panels
Lighting Fixtures and Lamps

16100.23 GROUNDING

A. Provide all electrical system grounding in accordance with the NEC and any state and local code requirements even if not shown on the drawings. Include additional grounding conductors in non-metallic race ways even though the drawings show only circuit and/or neutral conductors.

B. Receptacles which do not have their mounting yokes connected to receptacle grounding point shall be grounded with a green insulated grounding jumper connected to outlet box. Provide a separate ground conductor with branch circuit wiring when indicated on drawings or when required by Code.

C. Provide additional grounding where shown on the drawings.

D. Ground cables shall be continuous without joints or splices throughout its length. If bare ground conductors are run through metallic conduit, they shall be securely bonded to each conduit at the entrance and exit. All connections to equipment or conduit shall be made with approved type of solderless connector, and same shall be thoroughly cleaned and bright before connection is made so as to insure a good metal contact. Connections which will be inaccessible after completion of project shall be made by the Cadweld or Thermo Weld process.

E. Grounding connections: Utilize Burndy "Thermoweld" process for all cable-to-cable, cable-to-steel, and cable-to-ground rod connections.

F. Where a grounding electrode is not available, a 3/4" diameter by 10'-0" long copperweld driven ground rod shall be provided for ground connections. This electrode shall have a resistance to ground not exceeding limits as set by State and Local Codes.

G. When the maximum resistance to ground specified above cannot be achieved, the Contractor shall increase the length and quantity of ground rods to achieve this resistance required. Where increased quantity and length of ground rods do not produce the maximum specified resistance, soil treatment around ground rods shall be provided.

16100.24 WIRING-GENERAL

A. All branch circuit wiring run within the building and not exposed to moisture, shall be installed in electrical-metallic tubing; Armored cable "AC" is permitted in concealed walls, partitions, & lights to the extent allowed by code.

B. All branch circuit wiring run outside of the building and exposed to moisture shall be installed in rigid intermediate galvanized conduit and run concealed in new construction, but exposed on existing construction.

C. All wiring for low tension, controls, communications and all other systems shall be in raceway specified for branch circuits unless specifically noted in other sections.

D. All feeder wiring run within the building shall be installed in electrical-metallic tubing. Exceptions are noted on the drawings. Aluminum conduit shall not be installed in concrete containing chloride additives.

E. Flexible metal conduit with approved type fittings may be used in limited lengths of connections to motors and recessed fixtures where it is necessary to provide flexible connections. It may also be used where structural members preclude the use of electrical metallic tubing or conduits.

F. Liquid tight flexible metal conduit in lengths of 3' or less with approved type fittings shall be used for connections to vibrating equipment, motors, and other outlets where wiring will be exposed to weather, moisture or vibrations.

G. Rigid nonmetallic conduit shall not be allowed in structural slabs unless approved by the Structural Engineers.

H. Install raceways from box to box or terminations as shown on the drawings or as required to effect circuiting described with circuit numbers adjacent to equipment. Grouping home runs or combining wires in common raceways will be allowed, with a maximum of four single pole branch circuits in a raceway. Increase wire sizes and raceways where required to avoid loss of ampacity as required by National Electrical Code.

I. Provide 'OZ' or equal conduit seals for all raceways, wires or cables passing through foundations, floors, walls, or footings.

J. All underground wiring and raceways located outside of building shall be a minimum of 24" below finished grade except wiring over 600 volts which shall be 30" below finished grade unless noted otherwise.

K. Exposed wiring within building shall be in E.M.T. with compression fittings. Concealed wiring in walls, partitions and ceilings may be MC for #10 wire and smaller (where allowed by code) and E.M.T. for #8 wire and larger.

L. Wiring in slab shall be rigid galvanized steel or underfloor duct. Short final connections to vibrating equipment shall be Sealtite.

M. All wiring shall be copper. Aluminum is not acceptable.

16100.25 CONDUITS AND RACEWAYS

A. All conduits shall be 3/4" minimum trade size diameter unless specified otherwise.

B. All rigid steel conduits shall have threads painted with Thomas and Betts copper shield where conduit is exposed to weather or dampness.

C. Raceways shall be capped with bushings during construction and swabbed clean before drawing in wire.

D. Conduits shall be cut square and reamed and all terminals shall be made up tight.

E. Rigid conduit system shall be made up with threaded fittings and couplings.

F. Exposed raceways shall run parallel to or at right angles to surfaces wired over and shall be provided with fittings or standard manufactured elbows.

G. Supports on all raceways shall run parallel to or at right angles to surfaces wired over and shall be spaced at a maximum of 10'. Supports on raceways larger than 2" shall be spaced at a maximum of 6'.

H. Fastenings shall be lead shields, rawl plugs, wood screws, lag bolts, beam clamps or toggle bolts. No wooden plugs will be permitted. No nails will be permitted.

I. Conduits and hangers shall be installed in a manner not to interfere with the work of other trades. This shall include trapeze hangers to straddle ducts, pipes or other obstructions where necessary. No perforated strap iron will be permitted.

J. Provide a conduit expansion fitting wherever run crosses an expansion joint in the structure and where conduit is attached to separate structures. Expansion fitting shall be "OZ" type "AX", Thomas and Betts, Steel City or approved equal.

K. Rigid IMC Conduit shall be "ETP Uni-Swivel" or approved equal.

L. Rigid heavy-wall galvanized conduit shall be Republic, National, Triangle, or approved equal.

M. Rigid aluminum conduit shall be Alco, Reynolds, Kaiser or approved equal.

N. Rigid non-metallic conduit shall be polyvinyl chloride Schedule 40 heavy wall made by Carlon or approved equal.

O. Surface metal raceway shall be Wiremold, Kindorf or approved equal.
P. Flexible metallic conduit shall be Anaconda, Columbia, General Cable or National. Liquid-tight type shall be Anaconda, Columbia or American Flexible Conduit Company.
Q. Rigid conduit bushings shall be impact resistant plastic insulating type as made by Thomas & Betts, Appleton, Steel City or approved equal.
R. Electrical-metallic tubing shall be Republic, ETP, National or approved equal with screw-type fittings.
S. All steel conduits in direct contact with earth shall be painted with two (2) coats of black asphalt prior to installation.
T. Provide a continuous red plastic strip 1'-0" above top of all underground raceways.
U. Conduit supports and hangers shall be galvanized by Steel City, Kindorf, or equal.

16100.26 OUTLET BOXES

A. Outlet boxes for ceiling fixtures shall be 4" octagonal galvanized steel boxes not less than 1 1/2" deep provided with 3/8" galvanized malleable iron fixture stud.

B. Outlet boxes set in concrete slabs for ceiling fixtures shall be 4" octagonal galvanized steel boxes of sufficient depth to have conduit entering from the sides clear of reinforcing steel. Box shall have 3/8" galvanized malleable iron fixture stud.

C. Concealed outlet boxes for wall brackets, switches and receptacles shall be 4" square galvanized steel boxes 1 1/2" deep with raised plaster covers of sufficient depth to accommodate wall surface material.

D. Exposed outlet boxes in dry locations for switches and receptacles shall be 4" square galvanized steel boxes not less than 1 1/2" deep with raised covers with rounded corners. If rounded corner covers cannot be provided in proper number of gangs, boxes shall be Wiremold or cast F.S. boxes so that corners of flat plates or covers do not project over box edge.

E. Exposed outlet boxes in damp locations or where exposed to weather shall be case galvanized steel with plates or covers.

F. Outlet boxes for switches and receptacles in tile or other hollow masonry construction shall be 3 1/2" deep galvanized changeable switch boxes. Through-the-wall boxes shall not be used.

G. Concealed outlet boxes shall have all unused knockouts closed with snap- in blanks. Exposed outlet boxes, except cast type with screw plugs, shall have no snap-in blanks or holes. Exposed boxes shall be replaced, if necessary, to achieve this result.

H. Pressed steel boxes shall be Steel City, Raco, Appleton, General Electric, or Thomas and Betts.

I. Cast boxes shall be Crouse Hinds, Pyle-National or General Electric.

J. All outlet boxes shall be of approved size for the number of wires to be accommodated according to NEC requirements.

16100.27 PULL OR JUNCTION BOXES AND WIRING TROUGHS

A. Furnish and install pull or junction boxes where indicated or where necessary to facilitate pulling of conductors. All boxes shall be sized according to NEC requirements.

B. Boxes shall be formed of hot dipped galvanized sheet steel except where specified otherwise.

C. Boxes installed in wet areas or where exposed to weather shall be cast aluminum with cast bolted covers.

D. Provide wiring troughs where indicated or where necessary to neatly interconnect safety switches, starters, relays, controls, etc. Troughs shall be Square D, or approved equal.
E. All covers on boxes and troughs shall be screw cover type, or combination hinged and screwed type.

16100.28 WIRES AND CABLES - 600 VOLT INSULATION

A. Wiring shall be type THWN or THW unless otherwise noted below or on the drawings; for conductors larger than #6 AWG, type XHHW will also be accepted.

B. MC cable shall be UL labeled type "MC" two, three, or four conductor type THWN.
C. Cables in high temperature areas shall have an insulation type suitable for the temperature cables used in spaces for environmental air shall conform with applicable NEC requirements.

D. All wire and cable conductors shall be copper with insulation rated 600 volts. Conductors #10 and smaller shall be solid; larger conductors shall be stranded.

E. Branch circuits for power and lighting shall be not less than #12 AWG or as noted. Wires to be sized for appropriate voltage drop.

F. Fixture wires shall be not less than #14 AWG type SFF-2 and flexible cords shall be not less than #14 type S.

G. Control wiring shall be not less than #14 AWG, unless otherwise noted.

H. Color coding shall be used throughout the system using black, red and blue for phase wires, white for grounded neutral wires and green for equipment grounding conductors. Electrical Contractor shall comply with applicable of the NEC.

I . Where wire or cable is installed in areas with an ambient temperature in excess of 86 degrees F, its current carrying capacity shall be decreased in accordance with the NEC. The wire and cable sizes shall be increased to obtain a current carrying capacity equal to or greater than the trip or fuse rating of the protective device protecting the wire or cable.

J. Copper conductor wires and cables shall be as manufactured by Anaconda, General Cable, General Electric, Hatfield Wire and Cable Company, Phelps-Dodge, Essex or Kerite.

16100.29 WIRE SPLICING AND TERMINATING OF 600 VOLT CONDUCTORS

A. Splices of wires up to 3 #8 conductors shall be made with pressure type connectors. Wire nuts or screw caps will not be permitted. Splices above this size shall be made with approved mechanical connectors, Scotchfill and Scotch #88 vinyl tape.

B. Splices in cables #6 gauge and larger shall be made with cast sleeve type connectors with set screws, Scotchfill and Scotch #88 vinyl tape.

C. Copper conductor terminations shall be made with mechanical, set screw, pressed copper lugs. Two bolt lugs shall be used if necessary to obtain sufficient contact surface of 200 amperes per square inch capacity, to maintain rigidity in terminating large cables.

D. Small wire splices shall be made with Thomas and Betts Wire nuts or approved equal connectors.

E. Large wire splices shall be made with "OZ" type XW and "OZ" type XTP, or approved equal connectors.

F. Terminal lugs shall be pressed copper screw lugs as made by Mac or equal.

16100.30 WIRING DEVICES AND PLATES

A. Provide at every indicated outlet the proper devices and plates as specified herein or on the drawings. Where more than one device is indicated in one location, they shall be ganged together in one box and under one plate as required.

B. Wall plates finish to be selected by OWNER.

C. Devices listed are to establish type, color, operation and capacity. Manufacturers shall be Hubbell, Pass and Seymour, or Arrow Hart.

16100.31 WIRING IN CONNECTION WITH OTHER TRADES AND OWNER'S EQUIPMENT

A. The Mechanical Contractors or OWNER will provide motor drives. Motorized equipment (except control motors), electric heaters and electric controls attached to pipes and/or equipment shall be installed by the Mechanical Contractor who provides this item. All remote buttons, relays, control cabinets, control motors, starters, TMCC, etc. and other electrical equipment not shown or specified to be supplied by the Electrical Contractor shall be turned over to the Electrical Contractor for installation.

B. The plans and specifications as prepared for bidding purposes indicate the work to be done, but are not detailed shop drawings and details of connections will not be available until shop drawings and other pertinent data is supplied by the Mechanical Contractors and Manufacturers of equipment. In submitting a bid, the Electrical Contractor guarantees he has performed similar work and is familiar with the type and scope of work to be done, as all electrical work required to properly operate this equipment, line connections, control connections, installation of starters, remote starting buttons, control motors, relays, wiring interconnections and all associated work shall be provided by the Electrical Contractor.

C. This Contractor shall carefully review the plans and specifications of the other trades, (Kitchen Equipment Contractors), (Heating, Ventilating, Air Conditioning Contractors) and (Plumbing Contractors), and other equipment requiring electrical connections, as all electrical work required for the operation of this equipment not specified as being furnished by others shall be the responsibility of this Contractor.

D. Detailed wiring diagrams, instructions and shop drawings of equipment will be provided to this Contractor by other trades, or by OWNER.

E. Should operation faults be found in the interconnecting of mechanical and electrical equipment, the fault when determined shall be attributed to the Contractor responsible for same. In the event of dispute, the Engineer shall make the final decision as to responsibility for correction. Improper wiring diagrams or shop drawings shall not be the responsibility of the Electrical Contractor.

F. For the nature and extent of control wiring involved, refer to drawings and specifications of other trades, and review the equipment to be provided by OWNER. Any control wiring diagrams shown are for estimating purposes only and must be verified by shop drawings before proceeding with the installation.

G. Motor starters, manual and magnetic, and starter control buttons or switches shall be provided by (other) contractors except as noted on the Electrical Drawings and installed by this Contractor.

H. This Contractor shall receive, place and connect Owner's equipment requiring electrical connections, unless specified otherwise.

I. This Contractor shall furnish all disconnect switches for motors and equipment as required by Code. Lock-out type buttons shall not be permitted. Provide fused disconnect switches wherever manufacturer requires them.

16100.32 LAMPS AND FIXTURES

A. Provide fixtures as shown on the fixture schedule and described below. The fixtures shall be supplied complete with lamps and any auxiliary devices necessary for their function. Fixtures shall be securely fastened to the ceiling structure as well as the outlet box where necessary to maintain proper alignment

B. This Contractor shall provide all stems, rods, supports, hang straight swivels, channel or angle iron bracing, etc., of the proper length and size as required to install fixtures in a neat and secure manner in their proper positions. Regular fixture stem and canopy sets shall be used in all cases unless specified otherwise. A minimum of one stem or support shall be furnished for each four (4') feet of fixture chassis except where the chassis is manufactured in eight (8') foot sections, in which case a stem or support may be placed at eight (8') foot intervals. Provide clips for lay-in fixtures in accordance with Article 410-16C of the NEC.

D. All ballasts for fluorescent fixtures shall be ETL and UL listed, shall be electronic, high frequency, high light output, unless specified otherwise and shall be equipped with an internal, thermal protection system. Ballasts shall be Class P in accordance with UL requirements. Provide low temperature (-20 DEG. C) ballasts in all HID and fluorescent fixtures mounted outside of building, unless specified otherwise. Ballasts shall be Advance with less than 20% total harmonic distortion (THD). Indicate ballasts as specified on drawings.

E. Ballast shall have the following minimum sound ratings:

Trigger Start	- A
Preheat	- A
Circline	- A
Rapid Start - 430 ma	- A
Slimline	- B
High Output - 800 ma	- B
Power Groove - 1500 ma	- C

F. Fixtures shall be designed and applied such that the ballast/fixture combination with all units in place in the room or space shall have an inaudible sound.

G. Fixture/Ballast combination shall be designed to limit maximum ballast case temperature to 90 degrees C.

H. Lighting fixtures shall conform to Articles 410 and 300-22 of the NEC.

I. This Contractor shall verify final types of ceiling construction for each fixture and shall provide plaster frames, special supports or bracing as required for the particular ceiling.

J. This provision shall supersede and take precedence over any type mounting detailed on the drawings, or the drawing schedules, or further delineated in these specifications. No additional compensation will be allowed for failure to observe this provision.

K.. Fixture catalog numbers may be shown for four (4') foot or other modular sections. This represents the series type required, not necessarily the correct length. The plans show the actual length of units or runs required. Fixture catalog numbers or partial numbers for accessories are to be interpreted as requiring a complete and operating fixture unit with all such intended accessories, including mounting, guards, lenses, supports, plaster frames, bodies, lamps, etc.

L. Where lenses, enclosures or other parts of lighting fixtures are specified as "acrylic," it shall be 100 % virgin acrylic.

M. All lighting fixtures, lamps, and lenses shall be cleaned free of dust, dirt, grease, smudges, and loose labels or debris.

N. Where fixture canopies are to be mounted on exposed outlet boxes, the boxes shall be Wiremold fixture boxes of proper size to prevent canopies overhanging the box edges. Where the wiring system is conduit or cable, the proper Wiremold adapter shall be provided at the box to make the transition.

16100.33 WIRING FOR STORE FIXTURES AND EQUIPMENT

GENERAL

A. Furnish and install circuits, feeders, and outlets specified herein. Completely connect and leave cases, store fixtures, and equipment in proper operating condition. A general description of such work follows; however, any omission of details will not relieve the contractor of the responsibility of completely connecting the various items. It shall be the duty of the contractor to familiarize himself with details involved by actual examination of equipment and fixtures.

B. Cases and checkout stands are subject to some relocations, and all dimensions and locations indicated shall be verified with representative of Owner before actual installation. Type of junction box outlet to be provided for each piece of equipment and case shall be determined by the type of fixtures or cases to be installed. Verify location of all electrical requirements with Owner immediately prior to rough-in. Connect wiring between adjacent cases, store fixtures, equipment of all items in each line-up, etc. for complete wiring.

16100.34 WIRING FOR BUILDING MECHANICAL EQUIPMENT AND SYSTEMS
GENERAL
A. Furnish and install all material, equipment, devices, wiring, and connections for mechanical equipment as indicated on drawings and specified herein. In addition, furnish and install all other basic materials, equipment and devices in accordance with other sections of this division of the specification which are applicable to the installation of this equipment.

PLUMBING, HEATING, VENTILATING, AND AIR CONDITIONING EQUIPMENT

B. Furnish and install circuits, outlets, feeders, (disconnect switches, and thermal overload switches), and make all connections to motors and controls for building mechanical equipment such as plumbing, heating, ventilating, and air conditioning equipment as indicated on drawings and herein specified and in accordance with the following SCHEDULE OF WIRING. Refer also to drawings and specifications for HVAC, refrigeration, and plumbing. Provide 120 volt weatherproof receptacle outlet within 25 feet of all heating and air conditioning units located outdoors. Provide UL listed wet location HPS fixture with guard and switch at all unit locations. Provide disconnect switches complete with fusetrons of class of fuses as indicated on drawings, or circuit breakers in panelboard where so indicated on drawings, for all feeder circuits to motors. Provide thermal overload switches with relays in each phase conductor for running protection of fractional horsepower motors unless motors are furnished with built-in thermal protection in which case a toggle switch shall be installed as a disconnect device.

C. Provide disconnect switches or motor rated toggle switches to disconnect main line current for all motors where out of sight, per N.E.C., from main disconnect device and controller. Provide rain tight switches for units located on roof or where exposed to the weather.

D. Provide outlet on separate circuit for control voltage in mechanical rooms. Install and connect magnetic starters.

E. Provide all starters unless otherwise noted or when they are furnished as part of the equipment.

F. Include disconnect switches for all equipment, where they are required by Code, also cutoff switches for all equipment which is automatically controlled from remote points such as unit heaters.

EXHAUST FANS

H. Furnish and install circuits, feeders, and make all connections to motors and motor controls for exhaust fans in locations indicated. Where exhaust fans are switched with lights, provide a TWO- Pole toggle switch. Disconnect switches are factory installed in rain tight enclosure for units on roof or where exposed to the weather. Where exhaust fans are not interlocked with other mechanical equipment, install and connect two-speed switches, magnetic starters, push-button stations, thermostats, or other control devices furnished by others. Where exhaust fans are interlocked with other mechanical equipment, provide interlock wiring and final connections.

16100.35 FINAL TESTS

A. This Contractor shall, upon completion of the work, make all tests and adjustments under the direction of the Engineer to demonstrate that all equipment and wiring under this contract will function satisfactorily in the manner intended.

B. Electrical wiring and equipment shall be free of electrical short circuits and unintentional grounds.

C. Insulation resistance on all conductors shall not be less than those required by the NEC.

D. All equipment shall be free of mechanical and electrical defects and shall perform as designed or intended.

E. This Contractor shall furnish qualified personnel, supplies and equipment to make all tests as may be required. Current and fuel consumption shall be from the Owner's supply, if connected and available at the time of the test.

16100.36 SAFETY AND DISCONNECT SWITCHES

A. Base named Manufacturer - Square D.

B. Provide all safety switches as shown on the drawings and/or required by the NEC for motor and electric heat equipment disconnection.

C. For stationery motors smaller than 1/2 HP, the disconnect switch may be a general use snap switch provided all Code provisions are met.

D. All motor disconnect switches shall be properly sized for the horsepower ratings using time delay fuses where indicated on the drawings.

E. All units in finished areas or where wiring is concealed shall be flush mounted.

F. All disconnect switches shall be lockable in the "ON" or "OFF" position.

16100.37 PHOTO CELLS

A. Provide Tork photo cell #2100 for 120V service. Switch shall be single pole, single throw rated for 1000 volt amperes mercury vapor or fluorescent load.

16100.38 MOLDED CASE CIRCUIT BREAKERS

A. Based named Manufacturer - Square D.

B. Circuit breakers shall be of the molded case bolted in type consisting of the number of poles and ampere ratings as noted on the drawings.

C. Circuit breakers shall be of the indicating type providing "ON," "OFF," and "TRIPPED" positions of the operating handle. When the breaker is TRIPPED, the handle shall assume a position between "ON" and "OFF" positions.

D. Breakers shall be of the quick-make quick- break type with inverse time characteristics secured through the use of a bi-metallic and a magnetic tripping element.

E. Two and three pole breakers shall be the common trip type. Handle extensions providing common manual operation will not be acceptable.

F. Circuit breakers with 225 ampere or larger frame sizes shall have interchangeable trips.

G. Provide locking tabs on all circuit breakers serving emergency lighting, fire alarm system, sound system, security systems, and other emergency or critical equipment.

H. Where the required circuit breaker frame amps is not listed at the minimum interrupting capacity, a listed circuit breaker with a higher interrupting capacity shall be used.

I. Where a circuit breaker is serving an air conditioning unit with multiple motors, breaker shall be "HACR" type.

16100.39 LIGHTING AND POWER PANELS

A. Base named Manufacturer - Square D.

B. The lighting panelboards shall be of the dead front, automatic molded case circuit breaker type.

C. Cabinets shall be code gauge with minimum 4" side, top, and bottom gutters and a minimum of 20" wide. Provide subfeed lugs and a minimum of 8" top, bottom and side gutters for feeder taps within panelboards and when feeders are installed in side gutters. New panels shall be recessed in all areas, except utility & machine room.

D. When indicated, a separate gutter compartment of the required size shall be provided for these feeder taps and the sub-feed lugs shall not be provided. Front and trim shall be sheet steel with ANSI 61 light gray finish over a cleaned, treated, primed surface. Include door and directory frame, combination lock and latch with two milled-type keys. Lock shall be flush with face of panel trim. Front shall be furnished with concealed adjustable trim clamps so that trim will fit flush and square. All panels shall be keyed alike. Doors shall be provided for access to contactors, time clocks, relays, etc.

E. Special fronts and trims embracing two or more panels located side by side shall be provided as shown on the drawings so that tops, bottoms, and doors line up in a horizontal direction for a neat and uniform appearance. Boxes shall be made correspondingly larger where required to meet this provision.

F. The panels shall be factory assembled complete with breakers. Any circuit breaker shall be capable of replacement without disturbing any other breaker, the main bus bars or branch wire connectors. The panels shall be capable of having branch circuits added without additional machining, drilling, or tapping. Branch circuits shall be sequenced phased on the main bus bars and the main bus carrying capacity shall be determined on a basis of not more than 750 amperes per square inch of cross sectional area for aluminum buses.

G. The panels shall be arranged for (3) phase, (4) wire, 277/480 volt or (3) phase, (4) wire, 120/208 volt service as required.

H. Circuit breakers shall be as specified in "Molded Case Circuit Breaker" section of the specifications.

I. Minimum interrupting capacity to be coordinated with local utility companies so as to interrupt the available fault current.

J.. All panels shall be provided with a complete type written directory of all connected and spare circuits.

K. In addition to any spare conduits shown, provide (1) 3/4" empty conduit for each 4 spare circuits or fraction thereof from all panels recessed in walls or partitions to the hung ceiling immediately adjacent, or just below. Terminate conduits in bushings in hung ceilings or flush mounted junction boxes 6" high by 12" long at the finished ceiling where hung ceilings do not exist.
L. Circuit numbers on the drawings are for identification only and do not indicate the position in the panelboard. Connect the circuits near the top of panel and the more heavily loaded circuits near the bottom. Balance all circuits evenly between phases so feeder wires carry approximately equal current. Rebalance if necessary.

M. The panels shall be located and sized as indicated on prints and connected as shown on the riser diagram. All panels must be recessed in finished areas. Panels must be set plumb with tops at one level, approximately 7'-6" to top maximum.

N. All new panels shall have fully rated copper bus bars.

16100.40 TEMPORARY LIGHT AND POWER

A. The Electrical Contractor shall provide, maintain, and operate a suitable temporary electric distribution system for light and power.

B. All necessary materials, i.e., panelboards, switches, fuses, cables, receptacle outlets, supports and over current protection including ground fault circuit interrupters, 20 amp. single-phase receptacles, 30 amp single-phase outlets, and all other accessories required for the temporary distribution system shall be provided by the Electrical Contractor.

C. All necessary labor and materials required for the installation and maintenance and subsequent removal of the temporary distribution system including all fuses and lamps shall be provided by the Electrical Contractor.

D. All necessary sleeves, and supports, as may be required for the temporary distribution system shall be provided by Electrical Contractor.

E. Minimum temporary lighting within all portions of the building shall be based upon a lighting intensity of five (25) foot candles throughout. Properly guarded left hand threaded lamps for meeting OSHA requirements and the following minimum lamping requirements shall be provided by the Electrical Contractor:

1. All wiring, outlets, and lamps as required shall be provided to create proper adequate lighting in stairs, corridors, and passages.

2. For security reasons lighting in stairs, corridors, and passages shall remain energized constantly, 24 hours of each day.

3. The Electrical Contractor shall maintain higher lighting intensities, as necessary, in areas where concrete finishing and work of similar nature is in progress, at no additional cost to the Contractor.

F. Minimum temporary power within all buildings provided by Electrical Contractor for electrically operated small tools shall be based on a minimum of 0.50 watts per square foot. All power outlets shall be properly grounded conforming to NEC and rules and regulations prescribed by OSHA, as well as all other agencies having jurisdiction within locale. When such codes, or regulations, are inconsistent, the more stringent shall prevail.

G. Electrical Contractor shall furnish and install feeders and lighting/power distribution centers of sufficient capacity for the requirements of the entire space, with sufficient number of outlets at such convenient locations so that grounded extension cords of not over 100 feet in length will reach all work areas requiring temporary power or light.

H. Feeders and branch circuits shall be extended to keep pace with construction.

I. Any subcontractor requiring temporary power in excess of the type and capacity specified herein shall provide the same at his expense.

J. No subcontractor shall allow, provide, or make available for use by any employees, any apparatus, equipment or cord sets not meeting OSHA requirements.

K. Electrical Contractor shall provide and maintain a central facility conforming to OSHA requirements, for the use of the Construction Manager and his subcontractors to test cord sets for continuity.

L. Electrical Contractor shall be responsible for obtaining all wiring permits required; prior to, as well as during construction, and adjust the temporary wiring system as needed to accommodate the construction of new building elements such as walls, ceiling, architectural work, etc.

M. Electrical Contractor shall maintain the temporary light and power system until its use is no longer required as determined by the Construction Manager. Electrical Contractor shall keep the system in good repair and shall promptly replace burned-out, defective, missing or broken lamps. Permanent fixtures may be used for temporary lighting when specifically approved by the Construction Manager. All lamps used for temporary lighting purposes in permanent fixtures shall be replaced with new unused lamps immediately prior to final acceptance of the permanent system.

N. Electrical Contractor shall alter and relocate temporary wiring as required when such interferes with construction as determined by the Construction Manager. Upon notification the Electrical Contractor shall disconnect and completely remove the temporary electrical system or portions thereof in a neat workmanlike manner without cost to the Tenant.

O. Electrical Contractor shall not disrupt electric power whether temporary or permanent during normal working hours. Any switching, splicing, or other work performed by the Electrical Contractor, necessitating an interruption of power shall be performed during hours other than which temporary light and power are required, as set forth herein, and the cost thereof shall be borne entirely by the Electrical Contractor.

P. Electrical Contractor shall provide 208V/3 phase 60 amp. welding outlets for this Project as required.

16100.41 SERVICE ENTRANCE PANEL BOARDS

FURNISH AND INSTALL CIRCUIT BREAKER TYPE PANEL BOARDS AS INDICATED IN THE PANEL BOARD SCHEDULES WITH BREAKERS OF FRAME AND TRIP RATINGS AS SHOWN ON THE SCHEDULES. WHERE PANEL BOARDS ARE SURFACE MOUNTED, IN FINISHED AREAS, PROVIDE SKIRT AND CAP FROM BOTTOM OF PANEL TO FLOOR AND FROM TOP OF PANEL TO CEILING.

CIRCUIT BREAKERS SHALL BE QUICK-MAKE, THERMAL-MAGNETIC, TRIP INDICATING AND HAVE COMMON TRIP ON ALL MULTIPLE BREAKERS, TRIP INDICATION SHALL BE CLEARLY SHOWN BY THE BREAKER HANDLE TAKING POSITION BETWEEN "ON" AND "OFF" WHEN THE BREAKER IS TRIPPED AND BY INDICATION. THE INDICATION SHALL CONSIST OF A HIGHLY VISIBLE RED TRIPPED CIRCUIT INDICATOR. CONNECTION TO THE BUS SHALL BE BOLT-ON.

BUS BAR CONNECTIONS TO THE BRANCH CIRCUIT SHALL BE "PHASE SEQUENCE" TYPE. THREE(3) PHASE, FOUR(4) WIRE BUSSING SHALL BE SUCH THAT ANY THREE(3) ADJACENT SINGLE POLE BREAKERS ARE INDIVIDUALLY CONNECTED TO EACH OF THE THREE(3) DIFFERENT PHASES IN SUCH A MANNER THAT TWO(2) OR THREE(3) POLE BREAKERS CAN BE INSTALLED AT ANY LOCATION. ALL CURRENT CARRYING PARTS OF THE BUS ASSEMBLY SHALL BE COPPER. MAINS RATINGS SHALL BE AS SHOWN IN THE PANEL BOARD SCHEDULE OR ON THE PLANS.

TERMINALS FOR FEEDER CONDUCTORS TO THE PANELBOARD MAINS AND NEUTRAL SHALL BE UL LISTED AS SUITABLE FOR THE TYPE OF CONDUCTOR SPECIFIED. TERMINALS FOR BRANCH CIRCUIT WIRING BOTH BREAKER AND NEUTRAL, SHALL BE UL LISTED AS SUITABLE FOR TYPE OF CONDUCTOR SPECIFIED.

ALL ELECTRICAL PANELBOARDS SHALL BE OF THE RECESSED OR SURFACE MOUNTED TYPE, AS PER THE DRAWINGS. IF FLUSH MOUNTED, IT SHALL BE SET INTO WALL AND ALL CONDUIT SHALL BE FLUSH INTO WALL. IN GENERAL, ALL EXISTING CONDUIT WIRING, ETC. WHICH ARE NOT SCHEDULED FOR REUSE, SHALL BE REMOVED, CAPPED AND FINISHED OFF IN A WORKMANLIKE MANNER TO PROVIDE ACCEPTABLE APPEARANCE. COORDINATE ROUGH-IN WORK WITH OTHER TRADES, IF PANEL BOARD IS RECESSED MOUNTED.

THE PANELBOARD BUS ASSEMBLY SHALL BE ENCLOSED IN A STEEL CABINET. THE SIZE OF THE WIRING GUTTERS AND GAUGE OF STEEL SHALL BE IN ACCORDANCE WITH NEMA STANDARDS AND UL STANDARD FOR PANEL BOARDS. THE BOX SHALL BE FABRICATED FROM GALVANIZED STEEL OR EQUIVALENT RUST RESISTANT STEEL. FRONTS SHALL INCLUDE DOORS AND HAVE FLUSH, CYLINDER TUMBLER-TYPE LOCKS WITH CATCHES AND SPRING LOADED STAINLESS STEEL DOOR PULLS. THE FLUSH LOCK SHALL NOT PROTRUDE BEYOND THE FRONT OF THE DOOR. FRONT SHALL HAVE ADJUSTABLE INDICATING TRIM CLAMPS WHICH SHALL BE COMPLETELY CONCEALED WHEN THE DOORS ARE CLOSED. DOORS SHALL BE MOUNTED WITH COMPLETELY CONCEALED STEEL HINGES. FRONTS SHALL NOT BE REMOVABLE WITH DOOR IN THE LOCKED POSITION. A CIRCUIT DIRECTORY FRAME AND CARD WITH A CLEAR PLASTIC COVERING SHALL BE PROVIDED ON THE INSIDE OF THE DOOR. THE DIRECTORY CARD SHALL PROVIDE A SPACE AT LEAST 5" HIGH x 3" WIDE AND SHALL BE TYPE WRITTEN TO IDENTIFY ALL EQUIPMENT TO AS-BUILT CONDITIONS AT COMPLETION OF JOB. FRONTS SHALL BE OF CODE GAUGE STEEL.

PANEL BOARDS SHALL HAVE A SHORT CIRCUIT CURRENT RATING EQUAL TO OR GREATER THAN THE INTEGRATED EQUIPMENT RATING. 5.8 PANEL BOARDS SHALL BE LISTED BY UNDERWRITERS LABORATORIES AND BEAR THE UL LABEL. PANELBOARDS SHALL BE SQUARE 'D' TYPE NQOD BOLT ON TYPE OR APPROVED EQUAL.

NEW CIRCUIT BREAKERS BEING INSTALLED IN EXISTING PANELBOARDS OR SWITCHGEAR SHALL BE OF THE SAME MANUFACTURER AND KAIC RATING AS THE EXISTING BREAKERS. 5.10 ALL RELOCATED EQUIPMENT SHALL BE PROPERLY MOUNTED. ALL DEFECTIVE PARTS SHALL BE REPLACED WITH NEW.

END OF ELECTRICAL SPECIFICATIONS

1 ELECTRICAL SPECIFICATIONS

ALBERT TAUS
& ASSOCIATES, ARCHITECTS
ALBERT TAUS, A.I.A., ARCHITECT
ARCHITECTURE·PLANNING·INTERIOR DESIGN·ENGINEERING
PHILADELPHIA, PA
PHONE: (215) 698 - 2516 · FAX: (215) 698 - 7398
atausarchitects.com

THESE PLANS ARE THE PROPERTY OF ALBERT TAUS & ASSOCIATES, ARCHITECTS, AND ARE NOT TO BE USED WITHOUT THE EXPRESSED WRITTEN PERMISSION OR CONSENT OF ALBERT A. TAUS, R.A., A.I.A.

STATE OF MISSOURI
ALBERT A. TAUS
NUMBER
A-2015032715
ARCHITECT

SIGNATURE

DOCUMENTS PREPARED FOR
DDW21DOUGLAS, LLC
C/O: MR. HOSSAM SHAHIN
109 E. HALE LAKE RD
WARRENSBURG, MO 64093

ATA200602.10

DATE	04/16/21
SCALE	AS NOTED
DRAWN	
CKD	DJK
APPD	AAT

NO	DESCRIPTION	DATE
6		
5		
4		
3		
2		
1		
–	ISSUED FOR PERMIT	4-29-21

REVISIONS

PROPOSED PROJECT
DUNKIN'
WITH DRIVE THRU
1100 NE DOUGLAS STREET
LEE'S SUMMIT MO. 64086
NEXT GEN (COOL PALAETTE)
ELECTRICAL SPECIFICATIONS

THESE PLANS ARE CONFIDENTIAL PROPERTY OF DUNKIN' BRANDS INC. UNDER RESTRICTED ACCESS.

DUNKIN' BRANDS [eatdrinkthink]

E6.1

1 GENERAL PLUMBING NOTES

1. DO NOT SCALE FROM THESE DRAWINGS.
2. DO NOT MAKE ANY CHANGES OR SUBSTITUTIONS WITHOUT SPECIFIC WRITTEN APPROVAL FROM THE ARCHITECT OR ENGINEER.
3. ALL INDICATED WORK SHALL BE PERFORMED BY THE PLUMBING CONTRACTOR UNLESS OTHERWISE NOTED.
4. REFER TO THE WRITTEN SPECIFICATIONS IN CONJUNCTION WITH THE PLANS FOR FULL PROJECT SCOPE.
5. IT IS THE RESPONSIBILITY OF THE PLUMBING CONTRACTOR TO REVIEW THESE PLANS AND SPECIFICATIONS, AS WELL AS THE RELATED HVAC, FIRE PROTECTION, ELECTRICAL, STRUCTURAL, ARCHITECTURAL, INTERIOR DECOR AND SITE ENGINEERING DRAWING TO BECOME FAMILIAR WITH THE FULL PROJECT SCOPE. IN ADDITION, THIS CONTRACTOR MUST COORDINATE WITH A TENANT REPRESENTATIVE TO FULLY UNDERSTAND ALL REQUIREMENTS WHICH MAY NOT BE SPECIFIED HEREIN AND WHICH THE TENANT MAY CONSIDER PART OF THIS CONTRACT. DURING THE COURSE OF CONSTRUCTION COORDINATION AND ACTUAL CONSTRUCTION, IT IS THE RESPONSIBILITY OF THE PLUMBING CONTRACTOR TO WORK CLOSELY WITH ALL ACCOMPANYING CONTRACTORS AND TRADESMEN IN ORDER TO ENSURE A SMOOTH RUNNING AND CAREFULLY COORDINATED INSTALLATION.
6. ANY DISCREPANCIES OR INADEQUACIES WITHIN THESE BID DOCUMENTS OR BETWEEN THESE BID DOCUMENTS AND THE RELATED HVAC, FIRE PROTECTION, ELECTRICAL, STRUCTURAL, ARCHITECTURAL, INTERIOR DECOR AND SITE ENGINEERING DRAWINGS, OR BETWEEN THESE BID DOCUMENTS AND FIELD CONDITIONS MUST BE BROUGHT TO THE ATTENTION OF THE TENANT, ARCHITECT AND ENGINEER PRIOR TO BID SUBMISSION.
7. ALL WORK SHALL BE PERFORMED IN ACCORDANCE WITH ALL APPLICABLE REGULATIONS INCLUDING BUT NOT LIMITED TO NATIONAL, CITY, STATE, LOCAL CODES AND ORDINANCES WHICH MAY BE IN EFFECT. ALL PLUMBING MATERIALS, INSTALLATION PROCEDURES AND SYSTEM LAYOUTS SHALL BE APPROVED BY ALL APPLICABLE CODE ENFORCEMENT AUTHORITIES HAVING JURISDICTION, AND IT SHALL BE THE PLUMBING CONTRACTOR'S RESPONSIBILITY TO OBTAIN AND PAY FOR ALL NECESSARY PERMITS AND APPROVALS FOR THIS INSTALLATION.
8. THE PLUMBING CONTRACTOR MUST VISIT THE SITE AND NOTE ALL EXISTING CONDITIONS AS WELL AS ALL CONDITIONS TO BE MET, PRIOR TO BID SUBMISSION. LACK OF A THOROUGH UNDERSTANDING OF THE PROJECT SCOPE AND CONDITIONS SHALL NOT CONSTITUTE AN EXCUSE FOR ERRORS OR OMISSIONS, NOR FOR A REQUEST FOR EXTRA COMPENSATION.
9. IT IS CRITICAL THAT THE PLUMBING CONTRACTOR FIELD VERIFIES ALL EXISTING INVERTS PRIOR TO BID SUBMISSION. IF ANY CONFLICTS EXIST BETWEEN THE NEW PLUMBING SYSTEMS AND THE EXISTING SITE LEVEL SYSTEMS, THEY SHOULD BE BROUGHT TO THE ATTENTION OF AN OWNER'S REPRESENTATIVE AND THE ENGINEER PRIOR TO BID SUBMISSION. EXTRA COMPENSATION WILL NOT BE ALLOWED FOR ANY EXTRA WORK WHICH RESULTS FROM AN INABILITY TO MEET THE INVERTS OF THE EXISTING SITE LEVEL PIPING SYSTEMS.
10. THE PLUMBING CONTRACTOR SHALL PROVIDE A COMPLETE SET OF RECORD "AS-BUILT" DRAWINGS INDICATING THE PRECISE LOCATION OF ALL SYSTEMS, EQUIPMENT CONCEALED OR EMBEDDED PIPING, PIPING CONNECTIONS AND ACCESS DOORS. THESE DRAWINGS SHALL ALSO INCLUDE ALL CHANGES AND DEVIATIONS FROM BID DOCUMENTS.
11. RUN ALL DOMESTIC WATER, WASTE, VENT AND GAS PIPING AS HIGH AS POSSIBLE THROUGHOUT ENTIRE BUILDING. INSTALL LONG RUNS OF PIPING WITHIN STEEL (JOIST) SPACE AND OTHER PIPING TIGHT TO BOTTOM OF STEEL. COORDINATE AND VERIFY WITH OTHER CONTRACTORS AS NOT TO INTERFERE WITH DUCTWORK, FIRE PROTECTION PIPING, LIGHTING SYSTEMS, ETC.
12. ALL EXPOSED HORIZONTAL AND VERTICAL PIPING SHALL BE INSTALLED IN A NEAT ARRANGEMENT IN LOCATIONS WHICH ARE THE MOST INCONSPICUOUS. VERTICAL DROPS SHALL BE KEPT TO AN ABSOLUTE MINIMUM AND THEIR FINAL LOCATIONS SHALL BE COORDINATED AND RUN WITHIN CHASES, WALLS, SOFFITS WITH OTHER MECHANICAL / ELECTRICAL FEEDS. ALL SUCH LOCATIONS ARE TO BE REVIEWED WITH A TENANT REPRESENTATIVE AND ARCHITECT PRIOR TO INSTALLATION.
13. FINAL CONNECTIONS TO ALL GAS FIRED APPLIANCES TO BE BY THE PLUMBING CONTRACTOR, REGARDLESS OF WHO PROVIDES APPLIANCE. THIS SHALL INCLUDE BUT NOT BE LIMITED TO HVAC EQUIPMENT, COOKING EQUIPMENT, EMERGENCY GENERATORS AND DOMESTIC HOT WATER HEATERS. EACH PIECE OF EQUIPMENT SHALL BE PROVIDED WITH A DIRT LEG, LUBRICATED PLUG VALVE, UNION AND GAS SHUT-OFF VALVE.
14. ALL PLUMBING FIXTURES / APPLIANCES SHALL HAVE THEIR OWN INDEPENDANT SHUT-OFF VALVES, INSTALLED IN AN EASILY ACCESSIBLE AND CONVENIENT LOCATION.
15. ALL DOMESTIC WATER BRANCH LINES SHALL HAVE THEIR OWN RESPECTIVE SHUT-OFF VALVES.
16. DOMESTIC HOT WATER HEATER TEMPERATURE / PRESSURE RELIEF VALVES SHALL BE PIPED FULL SIZE TO THE NEAREST APPROVED STANDPIPE OR FLOOR DRAIN. THIS REQUIREMENT SHALL BE APPLICABLE TO ALL DOMESTIC WATER HEATERS EXCEPT INSTANTANEOUS WATER HEATERS.
17. ALL HANDSINKS SHALL HAVE IN-LINE WATER TEMPERING VALVES INSTALLED SO AS TO BE EASILY ACCESSIBLE. THESE TEMPERING VALVES SHALL BE SET TO DELIVER HOT WATER AT 105° F.
18. ALL PLUMBING VENT LINES NOTED AS "V. UP" OR "VENT UP" SHALL BE CONNECTED TO THE NEAREST APPROVED "V.T.R." OR "VENT THRU ROOF."
19. WHERE APPLICABLE, DO NOT RUN VENTS THROUGH ROOF AT PRE-FINISH METAL ROOFING SYSTEMS, INSTEAD DIVERT VENT PIPING TO RUN UP THROUGH FLAT MEMBRANE ROOF. VENTS THROUGH ROOF SHALL NOT BE VISIBLE TO STORE CLIENTELE. VENTS THROUGH ROOF SHALL TERMINATE A MINIMUM OF 10'-0" FROM ALL FRESH AIR INTAKES, COORDINATE EXACT LOCATION WITH MECHANICAL DRAWING.
20. THE PLUMBING CONTRACTOR SHALL RUN OUT ALL BUILDING DRAINAGE AND WASTE LINES AND MAKE ALL CONNECTIONS TO SITE SYSTEMS AS INDICATED ON BID DOCUMENTS.
21. ALL REFRIGERATED CASES AND WALK-IN REFRIGERATION / FREEZER COIL CONDENSATE PIPING SHALL BE PIPED TO HUB DRAINS AND/OR STANDPIPES BY THE PLUMBING CONTRACTOR. CONDENSATE PIPING SHALL BE COPPER. ALL AIR HANDLER UNIT CONDENSATE PIPING SHALL ALSO BE FURNISHED AND INSTALLED BY THIS CONTRACTOR.
22. PRIOR TO INSTALLING SYSTEMS, THE PLUMBING CONTRACTOR SHALL MEET WITH A TENANT'S REPRESENTATIVE TO FIELD VERIFY THE EXACT LOCATION OF ALL PROPOSED EQUIPMENT WHICH MAY NOT BE CLEARLY INDICATED ON THE DRAWINGS.
23. THE PLUMBING CONTRACTOR SHALL COORDINATE THE ENTIRE UNDERGROUND PLUMBING PIPING SYSTEM LOCATIONS AND INVERTS WITH THE REFRIGERATION TRENCHING, INCLUDING PITS AND PULL BOXES AS WELL AS ALL OTHER UNDERGROUND SYSTEMS.
24. COORDINATE ALL APPLIANCE / FIXTURE SCHEDULE I.D. NUMBERS WITH THE ARCHITECTURAL DRAWINGS FOR THE EXACT QUANITY AND LOCATIONS.
25. ALL FOOD PREPERATION EQUIPMENT WITH DIRECT CONNECTIONS TO THE DOMESTIC WATER SYSTEM SHALL BE EQUIPPED WITH WATTS, No.7 DUAL CHECK VALVE TYPE BACKFLOW PREVENTION DEVICE.
26. THE PLUMBING CONTRACTOR SHALL FURNISH AND INSTALL WASH DOWN FAUCET (WDF) EQUIPPED WITH INTEGRAL VACUUM BREAKER BENEATH ALL COMPARTMENT SINKS.
27. ALL FLOOR DRAINS IN KITCHENS, MECHANICAL ROOM AND TOILET ROOMS SHALL BE EQUIPPED WITH AUTOMATIC TRAP PRIMERS.

2 SYMBOLS LEGEND

DESCRIPTION	SYMBOL
SANITARY PIPING	S
WASTE PIPING	W
VENT PIPING	
NATURAL GAS	G
COLD WATER	
HOT WATER	
GREASE WASTE	SN
CONDENSATE DRAIN	
SANITARY PIPING	EX.SAN
FLOOR SINK	
EXISTING FLOOR SINK	
FLOOR DRAIN	
EXISTING FLOOR DRAIN	
FLOOR CLEAN OUT	
FILTERED WATER	FW

DESCRIPTION	SYMBOL
EXISTING FLOOR CLEAN OUT	
WALL CLEAN OUT	
HORIZONTAL CLEAN OUT	
P TRAP	
PIPE DOWN, DROP & RISE	
PIPE UP	
HOSE BIBB ELEV.	
HOSE BIBB PLAN	
WASH DOWN FAUCET / HOSE BIBB	
GATE VALVE	
CHECK VALVE	
SOLENOID VALVE	
PRESS. RED. VALVE	
GAS COCK	
GREASE INTERCEPTOR	
FLOW ARROW	
WATER FILTER	

3 ABBREVIATION LEGEND

SYMBOL	DESCRIPTION
AFF	ABOVE FINISHED FLOOR
AFG	ABOVE FINISHED GRADE
ASSY	ASSEMBLY
BFF	BELOW FINISHED FLOOR
BFG	BELOW FINISHED GRADE
?	CENTER LINE
CLG	CEILING
CO	CLEAN OUT
COMP	COMPARTMENT
CW	COLD WATER
DN	DOWN
DOM	DOMESTIC WATER
DW	DISH WASHER
DWH	DOMESTIC WATER HEATER
EWH	ELECTRIC WATER HEATER
EWC	ELECTRIC WATER COOLER
FAI	FRESH AIR INTAKE
FCO	FLOOR CLEAN OUT
FD	FLOOR DRAIN
FFD	FUNNEL FLOOR DRAIN
FP	FROST PROOF
FPWH	FROST PROOF WALL HYDRANT
FS	FLOOR SINK

SYMBOL	DESCRIPTION
FW	FILTERED WATER
G	GAS
GI	GREASE INTERCEPTOR
HB	HOSE BIBB
HS	HAND SINK
HW	HOT WATER
MS	MOP SINK
OC	ON CENTER
PC	PLUMBING CONTRACTOR
S	SANITARY
SPR	SPRINKLER
SF	SQUARE FEET
SP	STAND PIPE
SS	STAINLESS STEEL
TP	TRAP PRIMER
TYP	TYPICAL
U/C	UNDER COUNTER
V	VENT
VIF	VERIFY IN FIELD
W	WASTE
WF	WATER FILTER
WP	WEATHERPROOF
WCO	WALL CLEAN OUT

4 KEY PLAN

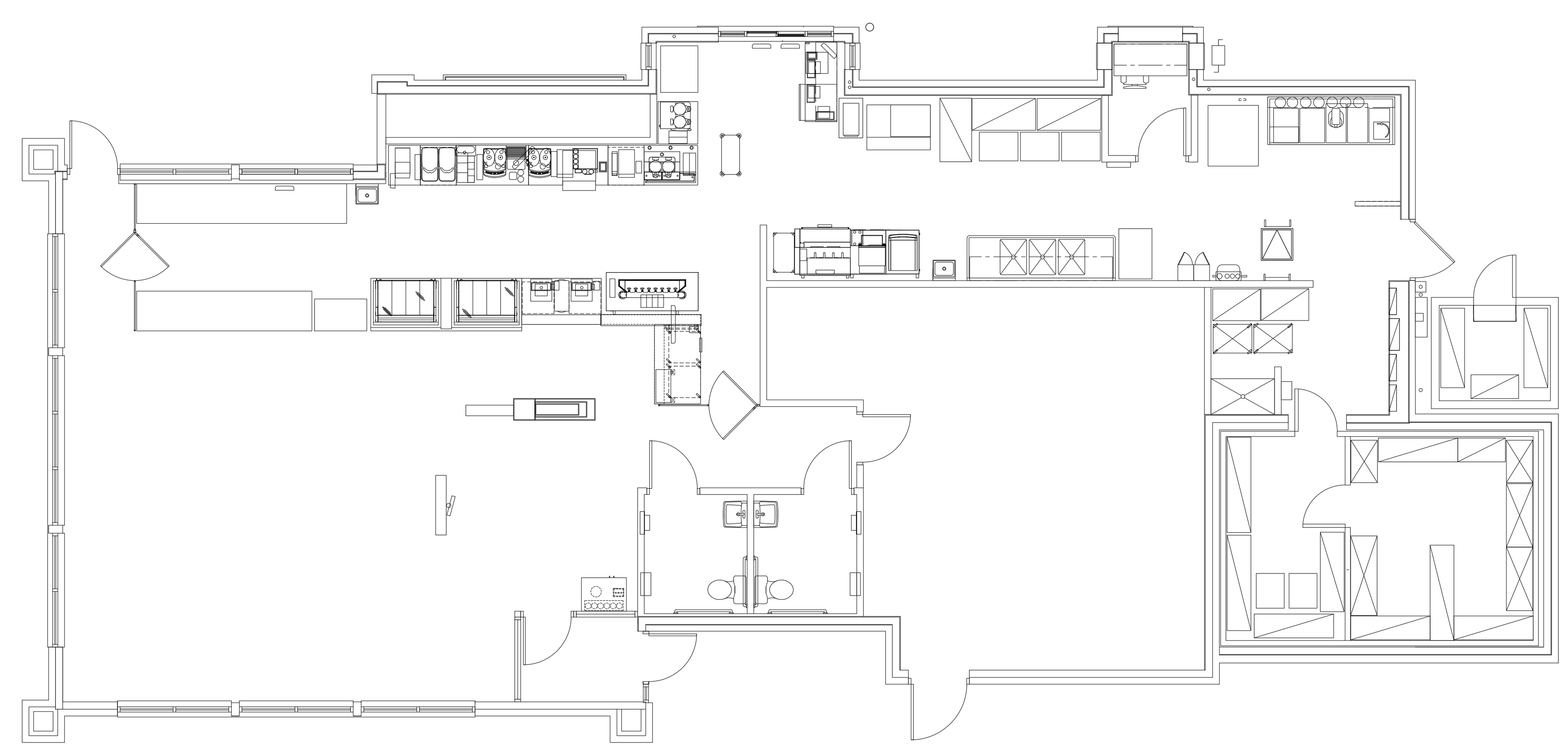

SCALE:NONE

5 CODES AND REGULATIONS INFORMATION

ALL CONSTRUCTION WORK SHALL BE PERFORMED IN ACCORDANCE WITH THE STATE CONSTRUCTION CODE AND OTHER NATIONAL AND STATE CODES INCLUDING:

NATIONAL FIRE PROTECTION ASSOCIATION (NFPA)

SHOULD CONFLICT BETWEEN CODES OR REFERENCES AND THE CONTRACT DRAWINGS OR SPECIFICATIONS BE OBSERVED BY THE CONTRACTOR, THE CODE OR REFERENCE SHALL BE REFERRED TO THE ENGINEER AND A WRITTEN OPINION BY THE ENGINEER SHALL BE OBTAINED.

GOVERNING CODES & REFERENCES:

2018 INTERNATIONAL BUILDING CODE.
2018 INTERNATIONAL MECHANICAL CODE.
2018 INTERNATIONAL FIRE CODE.
2018 INTERNATIONAL PLUMBING CODE.

6 DRAWING INDEX

DWG #	DRAWING TITLE
P1.1	PLUMBING OVERVIEW
P2.1	PLUMBING PLANS
P3.1	PLUMBING DETAILS
P4.1	REVERSE OSMOSIS SYSTEM
P5.1	PLUMBING SCHEDULES
P6.1	PLUMBING SPECS. & RISER DIAGRAM

ALBERT TAUS
& ASSOCIATES, ARCHITECTS
ALBERT TAUS, A.I.A., ARCHITECT
ARCHITECTURE·PLANNING·INTERIOR DESIGN·ENGINEERING
PHILADELPHIA, PA
PHONE: (215) 698-2516 . FAX: (215) 698-7398
atausarchitects.com

THESE PLANS ARE THE PROPERTY OF ALBERT TAUS & ASSOCIATES, ARCHITECTS, AND ARE NOT TO BE USED WITHOUT THE EXPRESSED WRITTEN PERMISSION OR CONSENT OF ALBERT A. TAUS, R.A., A.I.A.

STATE OF MISSOURI ALBERT A. TAUS NUMBER A-2015032715 ARCHITECT

SIGNATURE

DOCUMENTS PREPARED FOR
DDW21DOUGLAS, LLC
C/O: MR. HOSSAM SHAHIN
109 E. HALE LAKE RD
WARRENSBURG, MO 64093

ATA200602.10

DATE	04/16/21
SCALE	AS NOTED
DRAWN	
CKD	DJK
APPD	AAT

REVISIONS

NO	DESCRIPTION	DATE
6		
5		
4		
3		
2		
1		
–	ISSUED FOR PERMIT	4-29-21

PROPOSED PROJECT
DUNKIN'
WITH DRIVE THRU
1100 NE DOUGLAS STREET
LEE'S SUMMIT MO. 64086
NEXT GEN (COOL PALAETTE)

PLUMBING OVERVIEW

THESE PLANS ARE CONFIDENTIAL PROPERTY OF DUNKIN' BRANDS INC. UNDER RESTRICTED ACCESS.

DUNKIN' BRANDS [eatdrinkthink]

P1.1

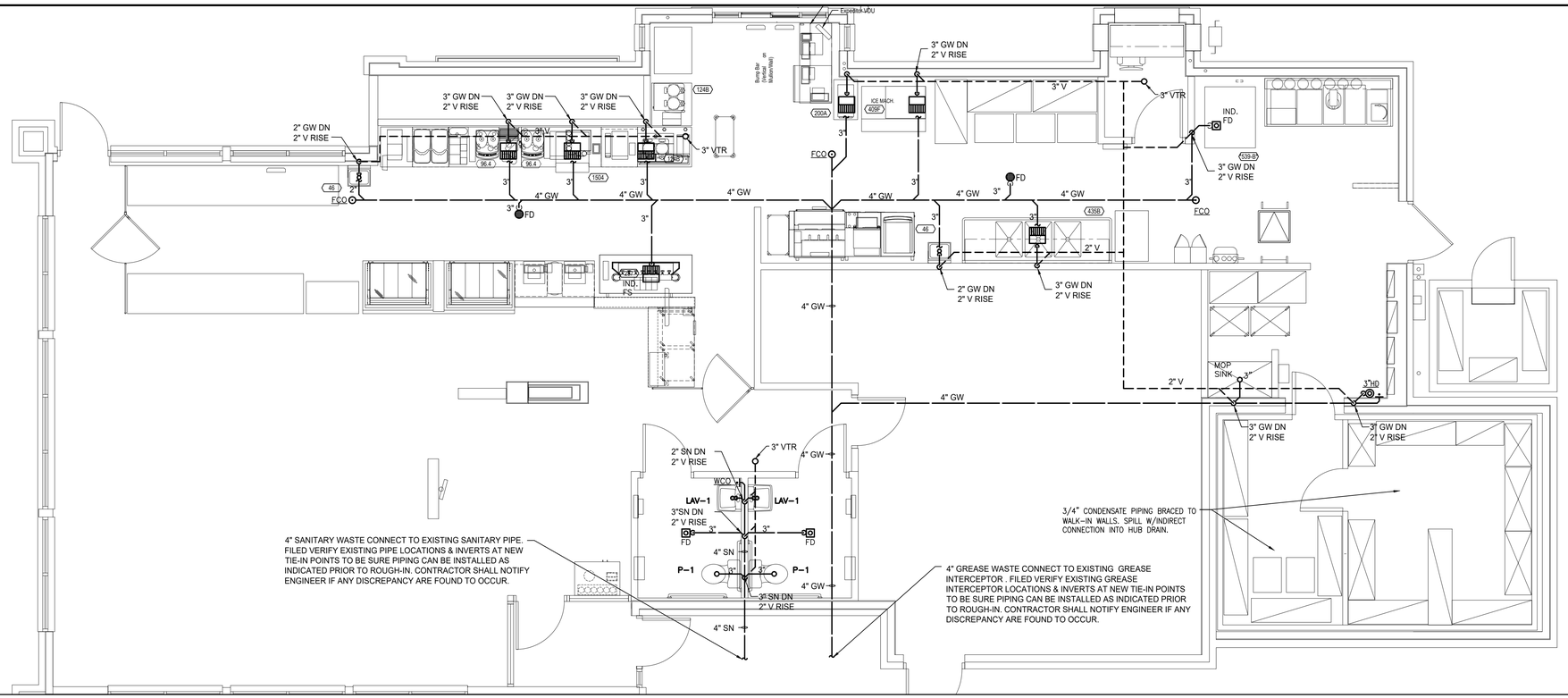

1 PLUMBING FLOOR SANITARY PLAN

SCALE: 1/4"=1'-0"

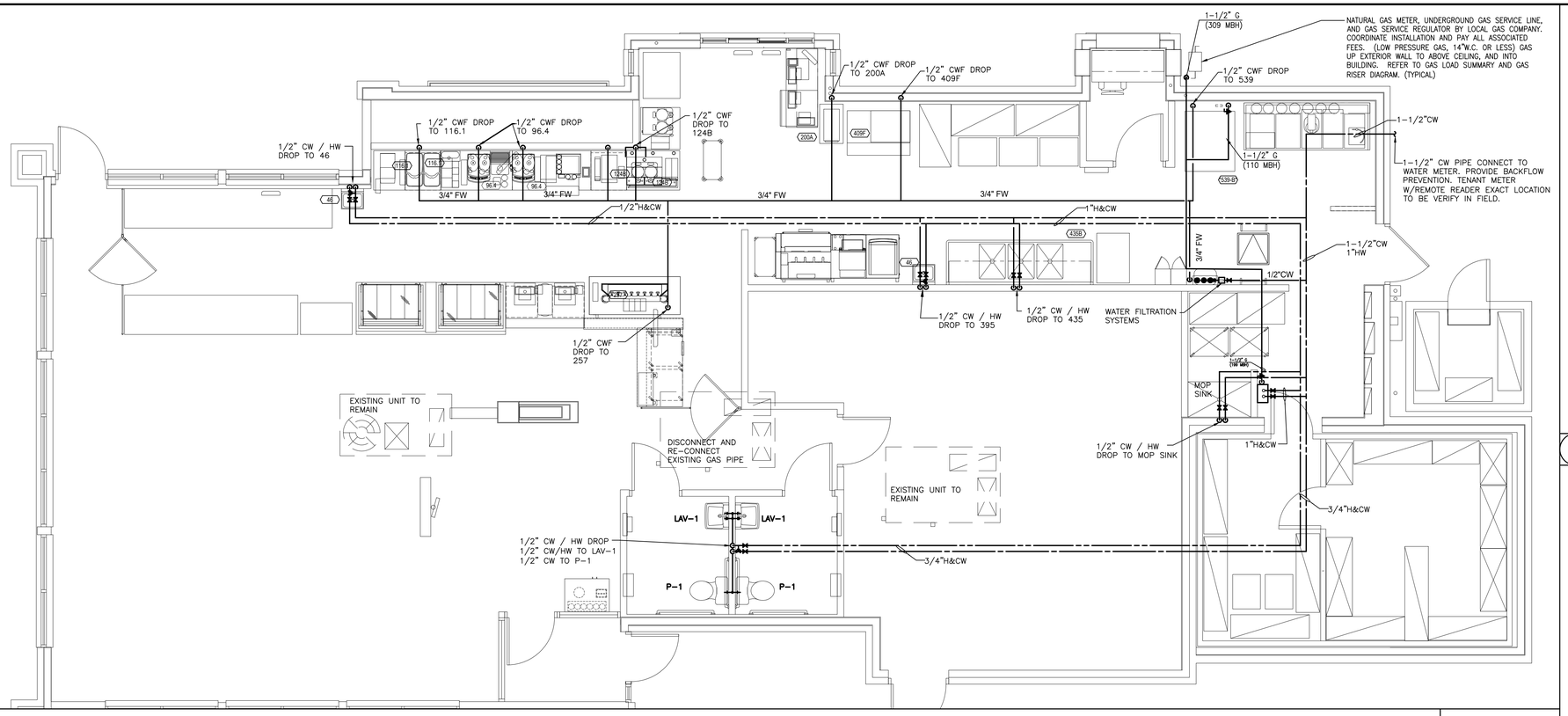

2 PLUMBING FLOOR WATER & GAS PLAN

SCALE: 1/4"=1'-0"

GENERAL NOTES:

1. AS APPLICABLE ALL PIPING IN CRAWL SPACES, UNHEATED AREAS AND AREAS SUBJECT TO FREEZING SHALL BE INSULATED AND HEAT-TRACED.

2. CONTRACTOR SHALL COORDINATE AND HAVE VERIFIED THE ENTIRE GAS PIPING SYSTEM WITH THE LANDLORDS METER READING CONTRACTOR. CONTRACTOR SHALL CONTACT LANDLORD FOR FURTHER INFORMATION.

3. ALL TRAPS AND BRANCHES RECEIVING CONDENSATE OR ICE DISCHARGE SHALL BE INSULATED TO THE MAIN.

4. PROVIDE A MINIMUM 24"X24" ACCESS PANEL EQUIPPED WITH A LOCK FOR ALL HIDDEN VALVES AND EQUIPMENT.

5. PROVIDE SLEEVES AT ALL FLOOR AND WALL PENETRATIONS.

6. PROVIDE AN APPROVED FIRESTOP AND SMOKE SEAL WHERE ALL PIPING OR CONDUITS PENETRATE VERTICAL SHAFTS, FLOORS, AND ALL WALLS ABOVE OR BELOW ALL CLASS A ACOUSTICAL TILE CEILINGS AND ALL SPACES WITHOUT ANY TYPE OF FINISHED CEILING.

7. P.C. SHALL SET & INSTALL ALL OWNER SUPPLIED FIXTURES & ALSO FURNISH & INSTALL ALL LETTERED FIXTURES. SEE ARCHITECTURAL DRAWING FOR PLUMBING FIXTURE RESPONSIBLITY. SEE PLUMBING DRAWING SCHEDULES & DETAILS FOR ALL P.C. SUPPLIED FIXTURES.

8. PROVIDE & INSTALL TRAP PRIMER PER SCHEDULE DRAWING.

9. RECESSED GREASE TRAP TO BE LOCATED AS TO NOT INTERFERE WITH THE LEGS OF THE (3) COMPARTMENT SINK

10. THE FLOOD RIM ELEVATION OF THE FLOOR DRAINS BE LOWER THAT THE NEAREST UPSTREAM MANHOLE, A BACK WATER VALVE MUST BE INSTALLED.

11. THE WATER SUPPLY CONNECTION TO COFFEE MACHINES AND NONCARBONATED BEVERAGE DISPENSERS SHALL BE PROTECTED AGAINST BACKFLOW BY A BACKFLOW PREVENTER CONFORMING TO ASSE 1022 OR BY AN AIR GAP. REFER TO SHEET P5.1 FOR BACKFLOW SCHEDULE

3 GENERAL NOTES

ALBERT TAUS & ASSOCIATES, ARCHITECTS
ALBERT TAUS, AIA, ARCHITECT
ARCHITECTURE·PLANNING·INTERIOR DESIGN·ENGINEERING
PHONE: (215) 698-2516 - FAX: (215) 698-7398
ATAUSARCHITECTS.COM

THESE PLANS ARE THE PROPERTY OF ALBERT TAUS & ASSOCIATES, ARCHITECTS, AND ARE NOT TO BE USED WITHOUT THE EXPRESSED WRITTEN PERMISSION OR CONSENT OF ALBERT A. TAUS, R.A., A.I.A.

STATE OF MISSOURI
ALBERT A. TAUS
NUMBER A-2015032715
ARCHITECT

SIGNATURE

DOCUMENTS PREPARED FOR
DDW DOUGLAS, LLC
C/O: MR. HOSSAM SHAHIN
109 E. HALE LAKE RD
WARRENSBURG, MO 64093

ATA200602.10

NO	DESCRIPTION	DATE
6		
5		
4		
3		
2		
1	ISSUED FOR PERMIT	4-29-21
–		

REVISIONS

DATE	04/16/21
SCALE	AS NOTED
DRAWN	
CKD	DJK
APPD	AAT

THESE PLANS ARE CONFIDENTIAL PROPERTY & PLANS MAY NOT BE REPRODUCED WITHOUT WRITTEN PERMISSION

PROPOSED PROJECT
DUNKIN'
WITH DRIVE THRU
100 NE DOUGLAS STREET
LEE'S SUMMIT, MO 64086

NEXT GEN (COOL PALAETTE)

PLUMBING PLANS

DUNKIN' BRANDS
[enDrinkinME]

P2.1

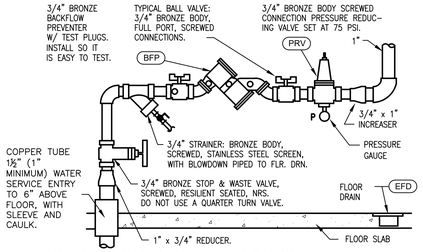

PROVIDE BACKFLOW PREVENTER OF TYPE AND MANUFACTURE APPROVED BY LOCAL AUTHORITIES AND DEPARTMENT OF NATURAL RESOURCES. INSTALL BACKFLOW PREVENTER IN HORIZONTAL UPRIGHT POSITION. SUPPORT ASSEMBLY FROM WALL BRACKET OR FLOOR STAND. PROVIDE REGULATOR ONLY IF PRESSURE EXCEEDS 80 PSI – VERIFY. STRAINER AND REDUCING VALVE MAY BE INSTALLED IN VERTICAL PIPE IF SPACE LIMITATIONS REQUIRE IT. CLEAN STRAINER BEFORE TURNING BUILDING OVER TO OWNER. PROVIDE ANY REQUIRED CERTIFICATION OF TEST OF BACKFLOW PREVENTER TO LOCAL AUTHORITIES.

1 DOMESTIC WATER SERVICE ENTRY — SCALE: NONE

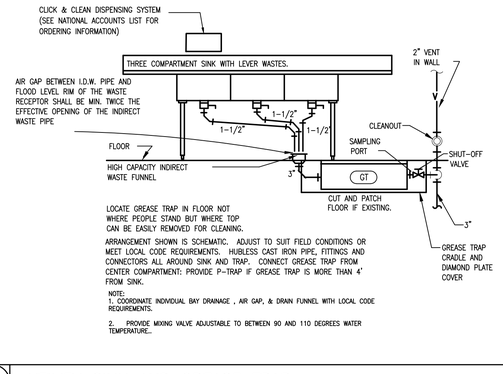

LOCATE GREASE TRAP IN FLOOR NOT WHERE PEOPLE STAND BUT WHERE TOP CAN BE EASILY REMOVED FOR CLEANING.

ARRANGEMENT SHOWN IS SCHEMATIC. ADJUST TO SUIT FIELD CONDITIONS OR MEET LOCAL CODE REQUIREMENTS. HUBLESS CAST IRON PIPE, FITTINGS AND CONNECTORS ALL AROUND SINK AND TRAP. CONNECT GREASE TRAP FROM CENTER COMPARTMENT: PROVIDE P-TRAP IF GREASE TRAP IS MORE THAN 4' FROM SINK.

NOTE:
1. COORDINATE INDIVIDUAL BAY DRAINAGE , AIR GAP, & DRAIN FUNNEL WITH LOCAL CODE REQUIREMENTS.
2. PROVIDE MIXING VALVE ADJUSTABLE TO BETWEEN 90 AND 110 DEGREES WATER TEMPERATURE..

2 UTILITY SINK AND GREASE TRAP — SCALE: NONE

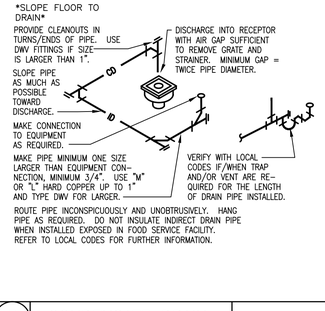

ROUTE PIPE INCONSPICUOUSLY AND UNOBTRUSIVELY. HANG PIPE AS REQUIRED. DO NOT INSULATE INDIRECT DRAIN PIPE WHEN INSTALLED EXPOSED IN FOOD SERVICE FACILITY. REFER TO LOCAL CODES FOR FURTHER INFORMATION.

3 CONDENSATE DRAIN — SCALE: NONE

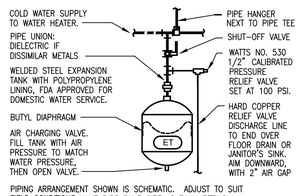

PIPING ARRANGEMENT SHOWN IS SCHEMATIC. ADJUST TO SUIT FIELD CONDITIONS. MAKE PIPE SAME SIZE AS TANK FITTING. FOLLOW MANUFACTURER'S INSTRUCTIONS FOR INSTALLATION PROCEDURE. VERIFY PROPER OPERATION WHEN INSTALLED.

4 EXPANSION TANK — SCALE: NONE

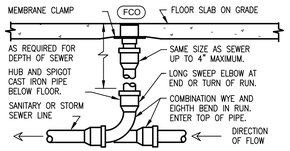

ROUND SECURED GASKETED NICKEL BRONZE ADJUSTABLE TOP WITH "CO" CAST IN COVER. PROVIDE CLEANOUT TOP WITH VARIATIONS SUITABLE FOR FLOOR COVERING (CARPET MARKER, RECESSED FOR TILE, SCORIATED FOR UNFINISHED FLOORS). PROVIDE GASKETED PLASTIC PLUG IN CAST IRON BODY. USE TEFLON JOINT COMPOUND ON PLUG THREADS. CLEAN THE TOP OF EXPOSED FCO AFTER INSTALLATION.

LOCATE AT BUILDING EXIT, AT ENDS OF RUNS, AT TURNS OF PIPE GREATER THAN 45 DEGREES, AT 50' INTERVALS ON STRAIGHT RUNS, AND/OR WHERE SHOWN ON PLANS. PROVIDE BACK FILL PER ARCHITECTURAL SPECIFICATIONS. LOCATE CLEANOUTS WHERE THERE IS 18" CLEAR AROUND. CONSULT LOCAL CODES FOR OTHER FCO REQUIREMENTS.

5 FLOOR CLEANOUT — SCALE: NONE

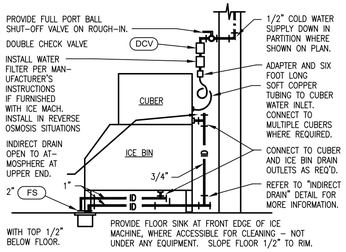

PROVIDE COLD WATER ROUGH-IN AT TOP OF ICE MACHINE. ARRANGEMENT SHOWN IS SCHEMATIC. ADJUST AS REQUIRED TO SUIT CONDITIONS. VERIFY CONNECTIONS WITH MANUFACTURER.

6 ICE MACHINE CONNECTIONS — SCALE: NONE

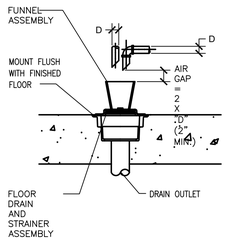

7 FLOOR DRAIN DETAIL — SCALE: NONE

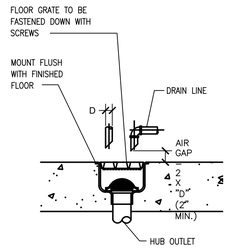

NOTE:
A. FLOOR SINK COVER FLUSH WITH TILE OR FLUSH WITH CONCRETE FLOOR IN AREA WITH NO TILE

8 FLOOR SINK DETAIL — SCALE: NONE

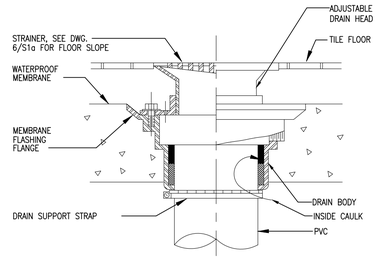

9 HUB DRAIN DETAIL — SCALE: NONE

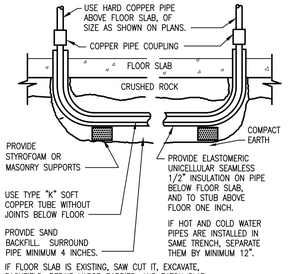

IF FLOOR SLAB IS EXISTING, SAW CUT IT, EXCAVATE, BACKFILLED, REPAIR VAPOR BARRIER, AND PATCH SLAB. PIPE SHALL HAVE LONG RADIUS TURNS WITHOUT KINKS. THERE SHALL BE NO CONTACT OF COPPER TUBE WITH OTHER PIPE, CONDUIT, OR REINFORCING STEEL.

10 WATER PIPE UNDER SLAB — SCALE: NONE

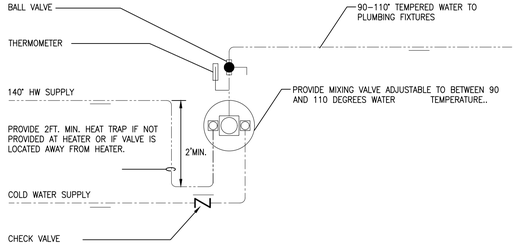

DETAIL NOTES:
1. SURFACE MOUNTED THERMOSTATIC MIXING VALVE ASSEMBLY TO BE SYMMONS SERIES 5 OR APPROVED EQUAL. 15 PSI MAXIMUM PRESSURE DROP. COORDINATE FINAL SELECTION WITH FLOW AND PRESSURE TESTS TO ENSURE PROPER OPERATION.
2. SEE PLANS FOR HW SIZES FROM WATER HEATER SYSTEM TO MIXING VALVE ASSEMBLY. REDUCE AT ASSEMBLY AS REQUIRED.
3. INSTALL PER MANUFACTURERS PUBLISHED RECOMMENDATIONS.

11 THERMOSTATIC MIXING VALVE — SCALE: NONE

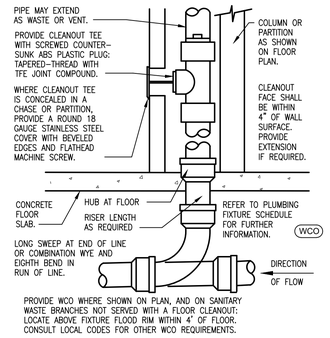

PROVIDE WCO WHERE SHOWN ON PLAN, AND ON SANITARY WASTE BRANCHES NOT SERVED WITH A FLOOR CLEANOUT: LOCATE ABOVE FIXTURE FLOOD RIM WITHIN 4" OF FLOOR. CONSULT LOCAL CODES FOR OTHER WCO REQUIREMENTS.

12 WALL CLEANOUT — SCALE: NONE

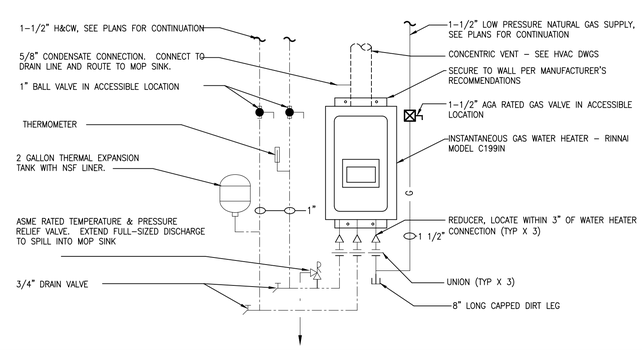

12 WATER HEATER DETAILS — SCALE: NONE

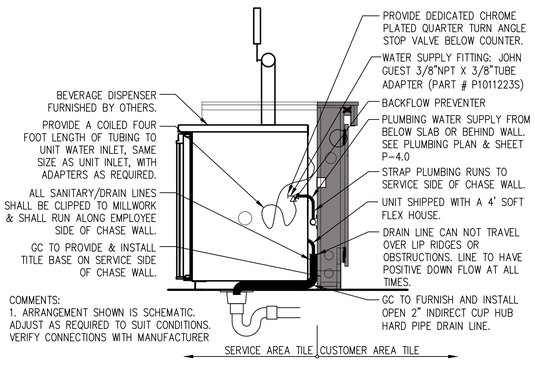

COMMENTS:
1. ARRANGEMENT SHOWN IS SCHEMATIC. ADJUST AS REQUIRED TO SUIT CONDITIONS. VERIFY CONNECTIONS WITH MANUFACTURER

13 TAB SYSTEM SECTION VIEW — SCALE: NONE

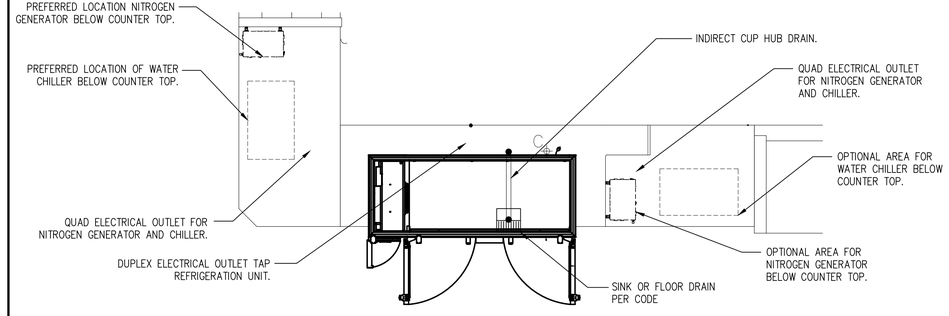

14 TAB SYSTEM PLAN VIEW (SIMILAR) — SCALE: NONE

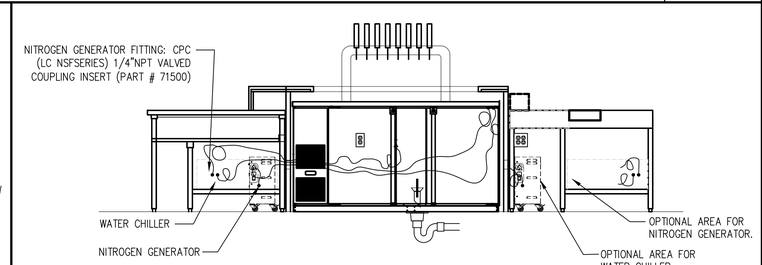

15 TAB SYSTEM AT REAR VIEW

ALBERT TAUS & ASSOCIATES, ARCHITECTS
ALBERT TAUS, AIA, ARCHITECT
ARCHITECTURE·PLANNING·INTERIOR DESIGN·ENGINEERING
PHONE: (215) 698-2516 FAX: (215) 698-7398
atausarchitects.com

THESE PLANS ARE THE PROPERTY OF ALBERT TAUS & ASSOCIATES, ARCHITECTS, AND ARE NOT TO BE USED WITHOUT THE EXPRESSED WRITTEN PERMISSION OR CONSENT OF ALBERT A. TAUS, R.A., A.I.A.

STATE OF MISSOURI — ALBERT A. TAUS — NUMBER A-2015032715 — ARCHITECT

SIGNATURE

DOCUMENTS PREPARED FOR
DDW2DOUGLAS, LLC
C/o: MR. HOSSAM SHAHIN
109 E. HALE LAKE RD
WARRENSBURG, MO 64093

ATA200602.10

NO	DESCRIPTION	DATE
6		
5		
4		
3		
2		
1	ISSUED FOR PERMIT	4-29-21
–		

REVISIONS

DATE	04/16/21
SCALE	AS NOTED
DRAWN	
CKD	DJK
APPD	AAT

PROPOSED PROJECT
DUNKIN'
WITH DRIVE THRU
100 NE DOUGLAS STREET
LEE'S SUMMIT, MO 64086

NEXT GEN (COOL PALAETTE)

PLUMBING DETAILS

THESE PLANS ARE CONFIDENTIAL PROPERTY OF DUNKIN BRANDS, INC. UNLESS OTHERWISE RESTRICTED ACCESS

DUNKIN' BRANDS [enjoydunkin'nut]

P3.1

DUNKIN' DONUTS WATER SPECIFICATION & TREATMENT REQUIREMENTS

CHARACTERISTIC	UNITS	DUNKIN DONUTS SPECIFICATION		WATER TREATMENT SOLUTIONS	
		IDEAL RANGE	LIMIT	A) WATER FILTER	B) REVERSE OSMOSIS
HARDNESS	PPM	80-120	< 200	> 200	NA
ALKALINITY	PPM	70-110	0-150	> 150	NA
TOTAL DISSOLVED SOLIDS (TDS)	PPM	100-175	< 250	NA	> 250
pH	pH	6.7-7.4	6.7-7.4	< 6.7 OR >7.4	NA
SODIUM	PPM	0-20	< 40	> 40	NA
CHLORIDE	PPM	0	< 40	> 40	NA
CHLORAMINES	PPM	0	0	> 0	NA
CHLORINE	PPM	0	0	> 0	NA
TURBIDITY	NTU	0-1	< 1	> 1	NA
PRESSURE	PSI	>65 PSI		BOOSTER PUMP IS REQUIRED	

* IN ADDITION TO THE ABOVE SPECIFICATIONS, WATER MUST MEET NSF42 AND NSF53 STANDARDS
PPM = PARTS PER MILLION
100 PPM = 5.8 GRAINS PER GALLON

NOTES:
1) PRIOR TO CONSTRUCTION, GC SHALL PROVIDE A WATER QUALITY TEST, PERFORMED IN THE CITY IN WHICH THE STORE WILL BE RECEIVING WATER. TESTING TO BE DONE ON A LIVE LINE CONNECTED TO THE SAME SUPPLY LINE FEEDING THE FUTURE STORE.

2) UPON RECEIPT OF THE WATER QUALITY TEST, THE GC SHALL PROVIDE A FILTRATION SYSTEM OR RO SYSTEM THAT WILL TREAT THE INCOMING WATER TO ALLOW IT TO MEET THE REQUIREMENTS IN THE TABLE ABOVE.

3) UPON COMPLETE OF CONSTRUCTION, GC SHALL SUBMIT A SECOND WATER QUALITY TEST TAKEN FROM A TREATED WATER OUTLET TO VERIFY THE PROPER WATER QUALITY IS BEING ACHIEVED.

SYMBOL LEGEND

DESCRIPTION	SYMBOL
COLD WATER PIPING (UNFILTERED)	CW
FILTERED WATER	FW
RO WATER	RO
BALL VALVE	BV
UNION	
STRAINER	
CHECK VALVE	CV

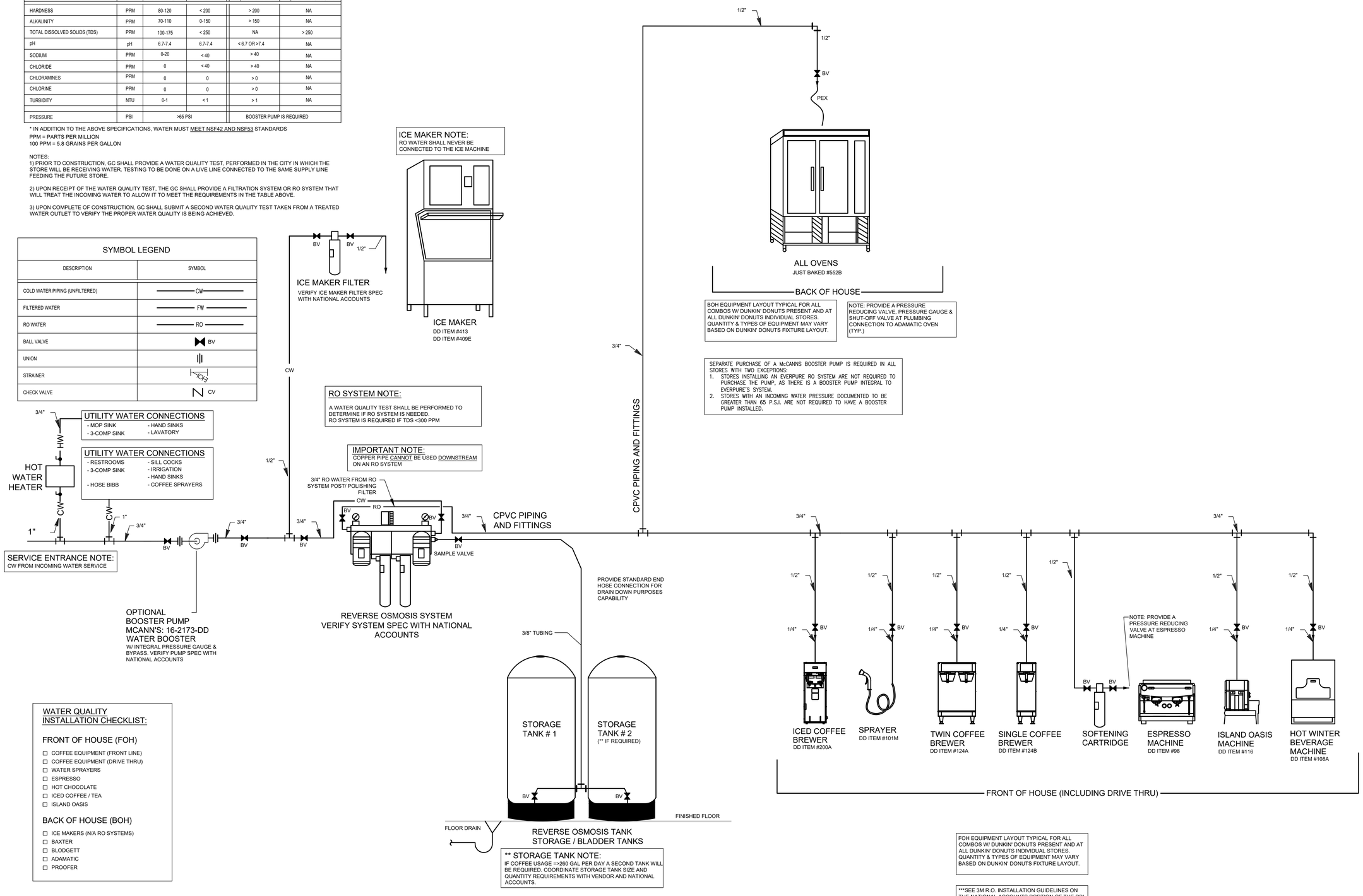

WATER QUALITY INSTALLATION CHECKLIST:

FRONT OF HOUSE (FOH)

- ☐ COFFEE EQUIPMENT (FRONT LINE)
- ☐ COFFEE EQUIPMENT (DRIVE THRU)
- ☐ WATER SPRAYERS
- ☐ ESPRESSO
- ☐ HOT CHOCOLATE
- ☐ ICED COFFEE / TEA
- ☐ ISLAND OASIS

BACK OF HOUSE (BOH)

- ☐ ICE MAKERS (N/A RO SYSTEMS)
- ☐ BAXTER
- ☐ BLODGETT
- ☐ ADAMATIC
- ☐ PROOFER

ALBERT TAUS & ASSOCIATES, ARCHITECTS
ALBERT TAUS, AIA, ARCHITECT
ARCHITECTURE-PLANNING-INTERIOR DESIGN-ENGINEERING
PHILADELPHIA
PHONE: (215) 698-2516 - FAX: (215) 698-7398
atausarchitects.com

THESE PLANS ARE THE PROPERTY OF ALBERT TAUS & ASSOCIATES, ARCHITECTS, AND ARE NOT TO BE USED WITHOUT THE EXPRESSED WRITTEN PERMISSION OR CONSENT OF ALBERT A. TAUS, R.A., A.I.A.

STATE OF MISSOURI
ALBERT A. TAUS
NUMBER A-2015032715
ARCHITECT
SIGNATURE

DOCUMENTS PREPARED FOR
DDW2 DOUGLAS, LLC
C/o: MR. HOSSAM SHAHIN
109 E. HALE LAKE RD
WARRENSBURG, MO 64093
ATA200602.10

	DATE	SCALE	DRAWN	CKD	APPD
	04/16/21	AS NOTED		DJK	AAT

REVISIONS

NO	DESCRIPTION	DATE
6		
5		
4		
3		
2		
1	ISSUED FOR PERMIT	4-29-21

THESE PLANS ARE CONFIDENTIAL PROPERTY OF DUNKIN' BRANDS, INC. UNDER RESTRICTED ACCESS

PROPOSED PROJECT
DUNKIN'
WITH DRIVE THRU
100 NE DOUGLAS STREET
LEE'S SUMMIT, MO. 64086

NEXT GEN (COOL PALAETTE)

REVERSE OSMOSIS SYSTEM

DUNKIN' BRANDS
[enrdrinkkind]

P4.1

ITEM		DESCRIPTION	MECHANICAL SERVICE CONNECTION						
			WATER			WASTE		GAS	
			CW.	HW.	F.W.	DIR.	IND.		BTU.
41		18"W X 34"D HAND SINK w/ 12" SPLASH GUARDS & DD GREEN FAUCET – SEE PLUMB DWGS	1/2"	1/2"		●	–		–
45		18"W X 34"D DUMP SINK w/ 12" SPLASH GUARDS	1/2"	1/2"		●	–		–
98		ESPRESSO MACHINE (BARISTA)	–	–	1/2"		–		
108A	108A–1	HOT WINTER BEVERAGE MACHINE	–	–	1/2"		–		
	108A–2	HOT WINTER BEVERAGE MACHINE	–	–	–		–		
116		MAGNABLEND BLENDER / ISLAND OASIS	–	–	1/2"		–		
124A		TWIN SH BREWER	–	–	1/2"				
124E		SINGLE SH BREWER	–	–	1/2"				
200A		ICED COFFEE BREWER IC3–DD			1/2"				
203A		ICE CADDY			–	●	–		
257		8 TAP SYSTEM WITH GENERATOR	–	–	1/2"				
259		DISHWASHER	5/8"	–	–	–	●		
395		HAND SINK w/ SIDE SPLASHES & DD GREEN FAUCET SEE PLUMBING DRAWINGS	1/2"	1/2"		●			
1504		ICE BIN 1375 LB CAPACITY	–	–			●		
413		PRODIGY ICE MAKER UP TO 1077 LBS PRODUCTION/24 HRS.	–	–	1/2"				
435B		108" SINK TRAX SHELVING WORKSTATION.	1/2"	1/2"			●		
539–B		GAS CONVECTION OVEN	–	–	3/4"		●		110 GAS INPUT
P–1		WATER CLOSET	1/2"	1/2"		●			ADA COMPLIANT
LAV–1		LAVATORY	1/2"	1/2"			●		ADA COMPLIANT – PROVIDE TEMPERED WATER

G.C. TO PROVIDE PLUMBING FIXTURE EXCEPT WHERE NOTED. REFER TO ARCHITECTURAL EQUIPMENT PLAN (K1) & LIST (K2,3) FOR SPECIFICATIONS.

2 PLUMBING EQUIPMENT SCHEDULE

TAG	DWH–1
SERVICING	RESTAURANT
MANUFACTURER	COMMERCIAL RINNAI TANKLESS
MODEL No.	C199IN –COMMERCIAL MCC–91 CONTROLLER
TYPE	TANKLESS
MBH / KW INPUT	199 MBH
VOLTAGE / PHASE /AMPS	120/1/6.2
NOTES / ACCESSORIES	1 THRU 9

NOTES / ACCESSORIES
(1) NSF and/or AGA APPROVED (2) ASME TEMP. & PRESS. RELIEF VALVE (3) HIGH TEMPERATURE & LOW WATER CUT–OFFS (4) CATHODIC PROTEC– TION (5) AUTOMATIC CONTROLS W/ ENERGY CUTOFF (6). DRAIN VALVE (7) HAND–HOLE CLEANOUT (8) PC TO PROVIDE AND INSTALL INCLUDING ALL NECESSARY VALVES, ETC.

4 WATER HEATER SCHEDULE

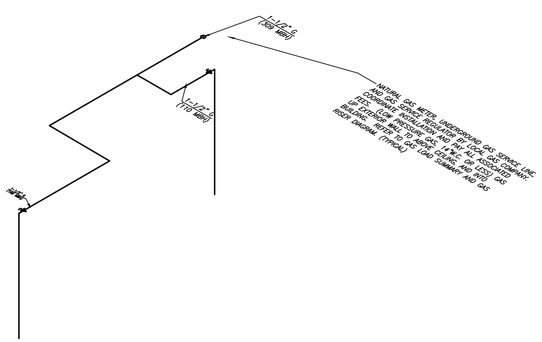

4 GAS RISER

TAG	TYPE	SERVING	MANUFACTURER	MODEL #	OUTLET	ACCESSORIES
FD	FLOOR DRAIN	TOILETS/KITCHEN	ZURN	Z–415 "B" STRAINER	3"	1,4
TD–1	TRENCH DRAIN	KITCHEN	ZURN	Z–895–KC	3"	1
FS–1	FLOOR SINK	COMP SINKS	WATTS	FS–850	3"	1,3
WCO	WALL CLEAN OUT					
FCO	CLEAN OUT		ZURN	ZS–1400	3"	5
TP	TRAP PRIMER		ZURN	ZS–1022		6

NOTES/ACCESSORIES:
(1) SEDIMENT BUCKET (2) VANDAL–PROOF TOP (3) IRON GRATE (4) TRAP PRIMER FITTING
(5) SS COVER AND SCREW (6) INSTALL WITH ACESS AT TOILET/KITCHEN

3 DRAIN SCHEDULE

FIXTURE	BACKFLOW PREVENTION DEVICE
INCOMING DOMESTIC WATER SERVICE	WATTS 009 REDUCED PRESSORE ZONE ASSEMBLY
HAND WASHING SINKS / LAVATORIES	AIR GAP
WATER CLOSET	FLUSH VALVE FURNISHED WITH AN INTEGRAL VACUUM BREAKER
HAND WASHING SINKS / LAVATORIES	AIR GAP
SERVICE / MOP SINK	FAUCET FURNISHED WITH AN INTEGRAL VACUUM BREAKER
COMPARTMENT SINKS	FAUCET FURNISHED WITH AN INTEGRAL VACUUM BREAKER
CARBONATED BEVERAGE MACHINES	SD3
BEVERAGE DISPENSING MACHINES	SD3
WALL HYDRANTS, HOSE BIBB, WASH DOWN FAUCET	FURNISHED WITH AN INTEGRAL VACUUM BREAKER
TRAP PRIMER	FURNISHED WITH INTEGRAL BACKFLOW PREVENTER AND VACUUM BREAKER PORT.

NOTES

1. CONTRACTOR SHALL FURNISH AND INSTALL BACKFLOW PREVENTION DEVICES AT THE EQUIPMENT LISTED ABOVE.

2. DEVICES LISTED ARE MANUFACTURED BY WATTS REGULATOR COMPANY. CONTRACTOR MAY SUBMIT AN EQUAL FROM ANOTHER MANUFACTURER FOR REVIEW.

3. CONTRACTOR TO VERIFY REQUIREMENTS WITH LOCAL AUTHORITIES HAVING JURISDICTION.

4. BACKFLOW PREVENTERS LISTED ABOVE ARE THE MINIMUM ACCEPTABLE BACKFLOW REQUIREMENTS. PROVIDE ADDITIONAL BACKFLOW PREVENTER DEVICES AS REQUIRED BY ANY OTHER LOCAL AND STATE AGENCIES HAVING JURISDICTION.

5 BACKFLOW PREVENTER SCHEDULE

TAG	DESCRIPTION	MBH INPUT
DWH–1	DOMESTIC WATER HEATER	199
539–B	RACK OVEN	110
	*COORDINATE WITH THE HVAC DRAWINGS. TOTAL MBH	309

6 GAS LOAD

ALBERT TAUS & ASSOCIATES, ARCHITECTS
ALBERT TAUS, AIA, ARCHITECT
ARCHITECTURE·PLANNING·INTERIOR DESIGN·ENGINEERING
PHONE: (215) 698-2516 · FAX: (215) 698-7398
PHILADELPHIA, PA
atausarchitects.com

THESE PLANS ARE THE PROPERTY OF ALBERT TAUS & ASSOCIATES, ARCHITECTS, AND ARE NOT TO BE USED WITHOUT THE EXPRESSED WRITTEN PERMISSION OR CONSENT OF ALBERT A. TAUS, R.A., A.I.A.

STATE OF MISSOURI
ALBERT A. TAUS
NUMBER
A-2015032715
ARCHITECT

SIGNATURE

DOCUMENTS PREPARED FOR
DDW2 DOUGLAS, LLC
C/o: MR. HOSSAM SHAHIN
109 E. HALE LAKE RD
WARRENSBURG, MO 64093

ATA200602.10

NO	DESCRIPTION	DATE
6		
5		
4		
3		
2		
1	ISSUED FOR PERMIT	4-29-21
–		

REVISIONS

DATE	04/16/21
SCALE	AS NOTED
DRAWN	
CKD	DJK
APPD	AAT

THESE PLANS ARE CONFIDENTIAL PROPERTY OF DUNKIN' BRANDS, INC. UNDER RESTRICTED ACCESS

PROPOSED PROJECT
DUNKIN'
WITH DRIVE THRU
1100 NE DOUGLAS STREET
LEE'S SUMMIT MO. 64086

NEXT GEN (COOL PALAETTE)

PLUMBING SCHEDULES

DUNKIN' BRANDS
[ordinkin]

P5.1

PLUMBING SPECIFICATION
DIVISION 15 – MECHANICAL
SECTION 15100 – PLUMBING

15100.01 GENERAL

A. PROVISIONS OF THE GENERAL CONDITIONS AND SUPPLEMENTARY GENERAL CONDITIONS FOR MECHANICAL AND ELECTRICAL CONTRACTS, WHETHER ATTACHED HERETO OR NOT, SHALL GOVERN ALL WORK UNDER THIS SECTION.

15100.02 INTENT

A. THE DRAWINGS SHOW THE GENERAL ARRANGEMENT AND EXTENT OF THE WORK TO BE DONE. EXACT LOCATION AND ARRANGEMENT OF ALL PARTS SHALL BE DETERMINED AS THE WORK PROGRESSES.

B. PLANS ARE SUBJECT TO SUCH MODIFICATIONS AS MAY BE NECESSARY AT THE TIME OF INSTALLATION IN ORDER TO MEET CONSTRUCTION CONDITIONS. ANY ADJUSTMENTS SHALL BE MADE BY THE PLUMBING CONTRACTOR WITHOUT EXTRA CHARGE AFTER OBTAINING APPROVALS.

15100.03 SCOPE OF THE WORK

A. FURNISH, INSTALL, TEST AND WARRANTY A COMPLETELY OPERABLE PLUMBING SYSTEM AS INDICATED ON THE DRAWINGS, DESCRIBED HEREIN, OR AS OTHERWISE REQUIRED.

1. WATER

A. CITY WATER SHALL BE BROUGHT TO THE SPACE WHERE SHOWN ON THE DRAWINGS. PROVIDE WATER METER IN ACCORDANCE WITH THE WATER DEPARTMENT'S RULES AND REGULATIONS.

PROVIDE AND INSTALL REDUCED PRESSURE ZONE DEVICE (RPZ) OR ANY OTHER BACKFLOW PREVENTION DEVICE IN ACCORDANCE WITH THE REQUIREMENTS/REGULATIONS OF THE LOCAL WATER AUTHORITY/COMPANY.

PROVIDE ALL NECESSARY INFORMATION AND OBTAIN APPROVALS AND PERMITS FOR THE INSTALLATION OF THE RPZ.

RUN CERTIFIED FLOW TEST AS REQUIRED BY NFPA 13, APPENDIX B TO DETERMINE THE ADEQUACY OF WATER PRESSURE. PRIOR TO BID, COORDINATE WITH ARCHITECT/ IF RESIDUAL PRESSURE IS LOWER THAN THE DESIGN PRESSURE SPECIFIED ON DRAWINGS. PROVIDE ALTERNATE PRICE FOR PRESSURE BOOSTER SYSTEM IF REQUIRED.

B. PIPE SIZES AS INDICATED ON THE DRAWING ARE MINIMUM SIZES ACCEPTABLE.

C. SHOCK ABSORBERS AND SHUT-OFF VALVES ARE TO BE PROVIDED AT EACH FIXTURE, OR GROUP OF FIXTURES.

D. VALVES SHALL BE INSTALLED AT EACH RISER, EACH BRANCH TO EQUIPMENT, AT FIXTURES NOT EQUIPPED WITH STOP VALVES AND WHERE SHOWN ON DRAWINGS.

E. ALL DOMESTIC WATER PIPING SHALL BE THOROUGHLY TREATED AND STERILIZED WITH A LIQUID CHLORINE SOLUTION OR DIRECT CHLORINE GAS PLACED IN THE UPSTREAM SIDE IN AMOUNTS TO GIVE A DOSAGE OF 250 PPM CHLORINE CALCULATED OR THE VOLUME OF WATER THE PIPING WILL CONTAIN, OR AS DIRECTED BY THE LOCAL HEALTH AUTHORITIES. A RESIDUAL OF 5 PPM SHALL BE PRODUCED IN ALL PARTS OF THE LINE AFTER A PERIOD OF TWENTY-FOUR HOURS. AFTER STERILIZING, FLUSH ALL LINES THOROUGHLY.

2. SANITARY, INDIRECT WASTE AND STORM SEWERS

A. SANITARY, INDIRECT WASTE AND STORM SEWERS SHALL BE PROVIDED AS SHOWN ON DRAWING.

B. VERIFY ALL INVERTS OF SITE LEVEL GREASE INTERCEPTOR (IF PROVIDED) AND SEWER LINE PRIOR TO BID SUBMISSION. IF ANY CONFLICTS EXIST BETWEEN THE NEW EQUIPMENT/PLUMBING SYSTEM AND SITE LEVEL SYSTEMS THEY SHALL BE BROUGHT TO THE ATTENTION OF A TENANT REPRESENTATIVE AND THE ARCHITECT/ PRIOR TO BID. PROVIDE ALTERNATE PRICE FOR SEWAGE EJECTOR OR SUMP PUMP SYSTEM THAT MAY BE NECESSARY.

C. ALL SANITARY OR WASTE LINES BELOW FLOOR SHALL BE 3" MINIMUM. SANITARY LINE LEAVING BUILDING SHALL BE AS INDICATED ON DRAWING. ALL UNDERGROUND PIPING IN UNHEATED AREAS SHALL BE INSTALLED 3'-0" BELOW FINISHED FLOOR (BELOW FREEZE LINE).

RISERS EXPOSED TO FREEZING TEMPERATURES SHALL BE HEAT TRACED AND INSULATED ENTIRELY, AND TO A POINT 3'-0" BELOW FLOOR.

D. PROVIDE A COMPLETE VENT SYSTEM AS SHOWN ON DRAWING. ALL VENTS THROUGH ROOF (VTR) SHALL BE 3" MINIMUM OR LARGER AS MAY BE REQUIRED BY LOCAL CODE. THEY SHALL TERMINATE 24" MINIMUM ABOVE ROOF LINE.

E. OFFSET VENTS, AS REQUIRED, SO V.T.R. IS MINIMUM OF 4'-0" FROM EDGE OF BUILDING.

3. GAS

A. GAS MAIN SHALL BE BROUGHT TO TENANT'S SPACE, WHERE SHOWN ON DRAWING; ROUGH-IN FOR ALL REQURIEMENTS AND MAKE FINAL CONNECTIONS. PROVIDE PROPER IDENTIFICATION OF MAIN GAS SHUT-OFF VALVE.

B. THE ENTIRE GAS PIPING SYSTEM SHALL BE INSTALLED IN COMPLIANCE WITH NFPA 54 AND ALL LOCAL CODES AND ORDINANCES.

C. PROVIDE DRIP LEGS AND CAPS FOR MOISTRUE REMOVAL. PROVIDE UNIONS AND LUBRICATED PLUG VALVES TO ALL EQUIPMENT USING GAS.

D. ALL GAS PIPING 4" AND SMALLER INSTALLED ON THE ROOF (IF ROOF INSTALLATION IS ACCEPTABLE BY LOCAL AUTHORITIES) SHALL BE GALVANIZED WELDED OR SEAMLESS STEEL PIPE (ASTM A53; ASTM 120).

E. ALL CUSTOMARY EQUIPMENT AND DEVICES NECESSARY FOR PROPER AND CONVENIENT OPERATION OF THE VARIOUS SYSTEMS, WHETHER SPECIFICALLY MENTIONED OR NOT, SHALL BE FURNISHED AND INSTALLED AS PART OF THIS WORK.

F. ALL ADDITIONAL PLUMBING WORK, AS SPECIFIED IN THE FOLLOWING SECTIONS OR AS SHOWN ON THE DRAWINGS, INCLUDING BUT NOT LIMITED TO, ROUGHING AND FINAL CONNECTIONS TO SINKS AND EQUIPMENT FURNISHED BY TENANT.

15100.04 WORK NOT INCLUDED

A. EXTERIOR STORM DRAINAGE SYSTEM, CATCH BASINS AND MANHOLES FARTHER THAN 5'-0" BEYOND BUILDING OR EDGE OF SIDEWALK.

B. EXTERIOR SANITARY SEWERS, MANHOLES, SEPTIC SYSTEMS AND GREASE INTERCEPTORS DESIGNATED AS SITE LEVEL SYSTEMS "BY OTHERS."

C. EXTERIOR WATER DESIGNATED AS SITE LEVEL WATER MAIN "BY OTHERS."

D. EXTERIOR SPRINKLER MAIN, AND INTERIOR SPRINKLER RISER AND BUILDING DISTRIBUTION SYSTEM.

E. TEMPORARY WATER AND DRAINAGE UNDER GENERAL CONDITIONS.

F. PAINTING, EXCEPT FOR GENERAL TOUCH-UP OF FACTORY FINISHED EQUIPMENT.

G. TOILET ROOM ACCESSORIES.

15100.05 PIPING, VALVES, HANGERS AND SUPPORTS, AND SPECIALTIES

A. GENERAL

1. ALL PIPING IN FINISHED AREAS SHALL BE CONCEALED. EXPOSED PIPING ACCEPTABLE ONLY WHERE ABSOLUTELY NECESSARY.

A. UNLESS OTHERWISE INDICATED, INSTALL ALL PIPING PARALLEL OR AT RIGHT ANGLES WITH BEAMS, WALLS, CEILINGS, OR OTHER BUILDING LINES. PIPES SHALL BE STRAIGHT, TRUE, AND PLUMB TO LINE. INSTALL ALL EXPOSED PIPE WORK AS CLOSE AS PRACTICAL TO WALLS, COLUMNS, CEILINGS OR OVERHEAD CONSTRUCTION TO PROVIDE MAXIMUM HEAD ROOM AND MINIMUM INTERFERENCE WITH USABLE BUILDING SPACE.

B. INSTALL ALL PIPING TO PERMIT EASY DRAINING. ADJUST HANGERS AND SUPPORTS TO ELIMINATE SAG POCKETS. PROVIDE HOSE END DRAIN VALVES AT ALL LOW POINTS TO PERMIT DRAINING OF THE ENTIRE DOMESTIC WATER SYSTEM.

C. INSTALL PIPING TO PERMIT EXPANSION AND CONTRACTION WITHOUT UNDUE STRESS, PARTICULARLY AT FLASHINGS AND EQUIPMENT.

D. ALL COPPER LINES UNDER CONCRETE FLOOR SHALL BE CONTINUOUS AND SHALL BE COVERED WITH SAND SO THAT LINES WILL NOT BECOME EMBEDDED IN THE CONCRETE.

2. WASTE LINES 3" AND SMALLER SHALL PITCH NOT LESS THAN 1/4" TO THE FOOT. LARGER PIPE SHALL PITCH NOT LESS THAN 1/8" TO THE FOOT. CHANGES IN DIRECTION SHALL BE MADE WITH EIGHT BENDS OR LONG SWEEP QUARTER BENDS. MINIMUM SIZE UNDERGROUND LINES TO BE 3" OR LARGER AS REQUIRED BY LOCAL CODE. RUN OTHER LINES LEVEL UNLESS OTHERWISE NOTED.

3. A CLEANOUT SHALL BE INSTALLED AT THE BASE OF ALL STACKS AND AT EVERY CHANGE OF DIRECTION GREATER THAN 45 DEGREES. CLEANOUTS SHALL BE INSTALLED NOT MORE THAN FIFTY FEET (50') APART IN HORIZONTAL DRAINAGE LINES OF FOUR INCH (4") NOMINAL DIAMETER OR LESS, AND NOT MORE THAN ONE HUNDRED FEET (100') APART FOR LARGER PIPES.

A. CLEANOUTS SHALL BE THE SAME SIZE AS THE PIPE THEY SERVE, EXCEPT THEY NEED NOT BE LARGER THAN SIX INCHES (6").

4. ALL PIPE PASSING THROUGH WALLS, FLOORS OR CEILING IN FINISHED ROOM SHALL BE FITTED WITH STEEL OR BRASS ESCUTCHEONS WITH SET SCREW. WHERE SURFACE IS TO RECEIVE A PAINT FINISH, THE ESCUTCHEONS SHALL BE NICKEL OR CHROMIUM PLATED. WHERE PIPING IS INSULATED, THE ESCUTCHEONS SHALL BE OUTSIDE THE INSULATION.

A. PROVIDE AND INSTALL PIPE SLEEVES WHEREVER PIPES PENETRATE MASONRY OR CONCRETE. CUT SLEEVES FROM STEEL PIPE LARGE ENOUGH TO PASS INSULATED PIPE, AT LEAST TWO (2) SIZES LARGER THAN LINE SIZE. CAULK GAPS AROUND PIPE. EXTEND SLEEVES COMPLETELY THROUGH WALLS OR FLOORS.

5. INCLUDE ALL NECESSARY ANCHORS, BRACES, GUIDES, MISCELLANEOUS STEEL, WALL BRACKETS, RISER CLAMPS, BEAM CLAMPS, CONCRETE INSERTS, ROLLERS AND SADDLES REQUIRED FOR A PROPER INSTALLATION. SUPPORT ALL RISERS AT BASE.

A. INCLUDE SUPPORT SLEEVES WHERE INSULATION IS CONTINUOUS THROUGH HANGERS. USE 16 GAUGE SHEET STEEL, 2 PIPE DIAMTERS LONG, 120 DEGREES SUPPORT.

B. DO NOT HANG OR SUPPORT PIPING FROM ROOF DECK.

C. IT SHALL BE THIS CONTRACTOR'S RESPONSIBILITY TO ENSURE THAT THE ENTIRE INSTALLATION CONFORMS WITH THE SEISMIC RESTRAINT REQUIREMENTS IN ACCORDANCE WITH BOCA 1987-90 SECTION 1113.0, BASED ON THE SPECIFIC SEISMIC ZONE, SMACA GUIDELINES FOR SEISMIC RESTRAINTS OF MECHANICAL SYSTEMS, ALL STATE AND LOCAL CODES, AND NFPA-13 AND 14 (FOR FIRE PROTECTION SYSTEMS). IF NECESSARY, THIS CONTRACTOR SHALL EMPLOY SERVICES OF A QUALIFIED AND LICENSED SEISMIC RESTRAINT ENGINEER. THE COST OF THE ENTIRE SEISMIC RESTRAINT DESIGN AND INSTALLATION SHALL BE INCLUDED IN THE PRIMARY CONTRACT PRICE.

B. ALL PIPING SHALL BE FURNISHED PER FOLLOWING SCHEDULES:
(SEE SECTION 15200 FOR PIPING, VALVES, ETC., IN SPRINKLER SYSTEM).

SERVICE SIZE PIPE FITTINGS UNIONS & FLANGES JOINTS UNDERGROUND SEWERS, DRAINS AND VENTS INSIDE BUILDING TO 5'-0" OUTSIDE 3" AND LARGER SERVICE WEIGHT CAST IRON ASTM A74; C1SP1 301. WASTE AND VENT (ABOVE GRADE) ALL SERVICE WEIGHT CAST IRON ASTM A74; C1SP1 301 DOMESTIC COLD WATER OUTSIDE BUILDING (BELOW GRADE) ALL COPPER TUBE SEAMLESS TYPE "K" OR "L" SOFT TEMPER ASTM B75 ASTM B88 ASTM 251 ASTM B306 CAST BRONZE SOLDER JOINT PRESSURE FITTINGS – SOLDERED TO SUITE THE PIPE ASTM B32 DOMESTIC COLD WATER AND HOT WATER INSIDE BUILDING (BELOW GRADE) ALL COPPER TUBE SEAMLESS TYPE "K" ASTM B75 ASTM B88 ASTM B251 NO FITTINGS ALLOWED BELOW GRADE NO FITTINGS ALLOWED BELOW GRADE NO FITTINGS ALLOWED BELOW GRADE DOMESTIC COLD WATER AND HOT WATER INSIDE (ABOVE GRADE) 3" & SMALLER COPPER TUBE SEAMLESS TYPE "L" HARD TEMPER ASTM B-88 COPPER ASA B16.22 CAST BRONZE #150 B16.18 OR WROUGHT CONNECT TO STEEL OR IRON WITH DIELECTRIC ADAPTORS. SWEAT ENDS UNION, ANTIMONY BRASS GROUND JOINT. SOLDERED 95-5 TIN (LEAD CONTENT CERTIFIED LESS THAN 0.2%) ASTM B32
GAS PIPING (ABOVE GRADE) 4" AND UNDER BLACK STEEL SCH. 40 WELDED OR SEAMLESS ASTM A120 150# BLACK MALLEABLE IRON SCREWED ANSI B16.3 BUSHINGS PROHIBITED DART #0832 UNIONS THREADED ANSI/ASME B1.20.1 GAS PIPING (ABOVE GRADE) 5" AND LARGER BLACK STEEL SCHED. 40 ASTM A120 BUTT WELDED FORGED STEEL BUTT WELDED SCHED. 40 ANSI B16.9 150# FORGED STEEL, FLAT FACED, WELDNECK TYPE FLANGES ANSI B16.5 BUTT WELDED

C. VALVES
1. VALVES SHALL BE AS MANUFACTURED BY CRANE, NIBCO OR GRINNNELL. VALVES SHALL BE BRONZE, SCREWED, GATE PATTERN, FOR 175# W.W.P.

2. SOLDERED OR SWEAT TYPE VALVES SHALL BE BRONZE WITH COPPER TO COPPER FOR TYPE "L" AND "K" COPPER TUBING FOR 150 # W.W.P.

3. VALVES SHALL BE INSTALLED AHEAD OF EACH GROUP OF FIXTURES, ON BOTH SIDES OF ALL WATER METERS, ON ALL SUPPLY LINES AND CONNECTIONS FOR EACH FIXTURE.

D. PIPE HANGERS AND SUPPORTS

1. HORIZONTAL PIPING SHALL BE SUPPORTED AT SUFFICIENTLY CLOSE INTERVALS TO KEEP IT IN ALIGNMENT AND PREVENT SAGGING.

A. COPPER TUBING SHALL BE SUPPORTED AT APPROXIMATELY 6'-0" INTERVALS FOR PIPING 1-1/2" INCHES AND SMALLER.

B. PLASTIC PIPING SHALL BE SUPPORTED AT NOT MORE THAN 4'-0" INTERVALS.

2. VERTICAL PIPING SHALL BE SECURED AT SUFFICIENTLY CLOSE INTERVALS TO KEEP PIPE IN ALIGNMENT AND CARRY THE WEIGHT OF PIPE AND CONTENTS.

3. GAS PIPING IN BUILDINGS SHALL BE SUPPORTED WITH PIPE HOOKS, METAL PIPE STRAPS, BANDS OR HANGERS SUITABLE FOR THE SIZE OF PIPING AND OF ADEQUATE ST RENGTH AND QUALITY, AND LOCATED AT PROPER INTERVALS SO THAT THE PIPING CANNOT BE MOVED ACCIDENTALLY FROM THE INSTALLED POSITION. GAS PIPING SHALL NOT BE SUPPORTED BY OTHER PIPING.

VERTICAL GAS PIPING SHALL BE SUPPORTED AT EVERY FLOOR LEVEL. SPACING OF SUPPORTS IN HORIZONTAL GAS PIPING INSTALLATIONS SHALL NOT BE GREATER THAN THE FOLLOWING:

SIZE IN PIPE (IN) SPACING (FT)
1/2 – 6'-0"
3/4 – 8'-0"
1-1/4 OR LARGER 10'-0"

E. PRESSURE GAUGES

1. WEKSLER INSTRUMENTS CORPORATION "REGAL" BA1 SERIES, 3-1/2" DIAL, RANGE: 1 TO 60 LBS. ACCEPTABLE ALTERNATE MANUFACTURERS ARE ASHCROFT OR U.S. GAUGE.

F. THERMOMETERS

1. WEKSLER INSTRUMENTS CORPORATION TYPE 3, WITH BRASS THERMO-WELL, RANGE 30 DEGREES TO 240 DEGREES F. ACCEPTABLE ALTERNATE MANUFACTURERS ARE ASHCROFT OR U.S. GAUGE.

15100.06 INSULATION

A. GENERAL
1. CLEAN AND DRY SURFACES TO BE INSULATED.
2. STAGGER AND TIGHTLY BUTT JOINTS.
3. INSULATE PIPES ONLY AFTER "TESTS".
4. INSULATE PIPE FITTINGS TO SAME THICKNESS AS ADJACENT PIPE INSULATION. FITTINGS SHALL BE COVERED WITH WOVEN GLASS FABRIC OR PREMOLDED P.V.C. SNAP-ON COVERS.
5. RUN INSULATION CONTINUOUS THROUGH HANGERS.

B. PIPE COVERING
1. INSULATION SHALL BE ONE PIECE TYPE, SELF-SEALING LAP WITH FACTORY APPLIED UNIVERSAL JACKET AND SHALL HAVE A THERMAL RESISTANCE OF 4.0 TO 4.6.
2. DOMESTIC COLD WATER; 1/2" THICK.
3. DOMESTIC HOT WATER; 1" THICK.
4. INSULATION SHALL BE OWENS-CORNING, MANVILLE, CERTAIN-TEED, PPG INDUSTRIES CAREY CO. OR ARMSTRONG HEAVY DENSITY SECTIONAL TYPE.

C. ALL DRAIN PIPES UNDER LAVATORIES SHALL BE INSULATED AS ABOVE, 1/2" THICK.

D. ALL HORIZONTAL STORM DRAINS ABOVE CEILINGS, AND ALL VERTICAL STORM LEADERS, SHALL BE INSULATED AS ABOVE, 1" THICK.

E. ALL SANITARY, INDIRECT WASTE AND WATER DISTRIBUTION PIPING IN AREAS EXPOSED TO FREEZING TEMPERATURES SHALL BE HEAT TRACED AND INSULATED AS REQUIRED. HEAT TRACE AND INSULATION GUIDE BY RAYCHEM OR EQUAL.

15100.07 FLOOR DRAINS AND ROOF DRAINS

A. F.D. #1: JOSAM #30003-6A, IN TOILET ROOMS AND GENERAL DRAINS.

B. ALTERNATES: WADE, ZURN OR J.R. SMITH OF EQUAL TYPE.

C. RD: PROVIDE ROOF DRAINS J.R. SMITH OR EQUAL, HAVING: OVERFLOW DRAINAGE, HIGH DENSITY POLYETHYLENE DOME, DEBRIS GUARD SLOTS, BAYONET LOCKING DEVICE, RUST RESISTANT BOLTS, COMBINED FLASHING CLAMP AND GRAVEL STOP, SEEPAGE OPENINGS, EXTENSION W/GASKET, TAPPED BOSSES, SMOOTH SUMP, UNDERDECK CLAMP BOSSES, SUMP RECEIVER AND UNDER DECK CLAMPS.

15100.08 PENETRATIONS

A. ALL PENETRATIONS THROUGH THE FLOOR-CEILING ASSEMBLY LEADING TO ANOTHER FIRE DEPARTMENT SHALL BE PROTECTED IN ACCORDANCE WITH 6-2.3.6.1* AND 6-2.3.6.2* OF NFPA 101 LIFE SAFETY CODE AND ANY OTHER LOCAL CODE IN EFFECT. CONSULT ARCHITECT AND LOCAL FIRE MARSHAL FOR DETAILS.

15100.09 CLEANOUTS

A. FOR GENERAL USE : POLISHED BRONZE TOP AND BRASS C.O. PLUG. JOSAM 56010-12-2; WADE, ZURN OR J.R. SMITH OF EQUAL TYPE.

B. FOR TILED FLOORS : POLISHED BRONZE TOP AND BRASS C.O. PLUG. JOSAM 56010-12-2; WADE, ZURN OR J.R. SMITH OF EQUAL TYPE.

C. ROUND ACCESS COVER AND SCREW : STAINLESS STEEL JOSAM 58600; WADE, ZURN OR J.R. SMITH OF EQUAL TYPE.

15100.10 PLUMBING FIXTURES

A. FURNISH AND INSTALL PLUMBING FIXTURES AND EQUIPMENT OF DESIGN AND QUALITY AS SHOWN ON THE PLANS OR AS SPECIFIED HEREIN, COMPLETE WITH ALL TRAPS AND FITTINGS. ALL TOILET FIXTURES SHALL BE WHITE ENAMEL OR CHINA AND ALL EXPOSED TRIM SHALL BE CHROME. PROVIDE HANGER BRACKETS AND SUPPORTS AS NEEDED FOR THE PROPER INSTALLATION OR FIXTURES.

B. REFER TO THE FOLLOWING SPECIFICATION AND THE DRAWINGS FOR EXTENT OF CONTRACTOR'S RESPONSIBILILTY REGARDING THE FURNISHING OF FIXTURES; HOWEVER, ALL FIXTURES MUST BE ASSEMBLED, INSTALLED, ROUGHED-IN AND CONNECTED BY THIS CONTRACTOR, EXCEPT AS EXPRESSLY NOTED ON THE P LANS AS "BY OTHERS".

15100.11 WATER HEATERS

A. PROVIDE DOMESTIC WATER HEATERS AND ACCESSORIES AS SCHEDULED AND DETAILED ON THE DRAWINGS.

B. PROVIDE ALL PIPING AND ACCESSORIES TO CONNECT DOMESTIC HOT WATER SYSTEM TO HEAT RECLAIM DEVICES PROVIDED BY OTHERS.

15100.13 DETAILS OF EQUIPMENT/SHOP DRAWINGS

A. THE CONTRACTOR SHALL PROMPTLY SUBMIT MINIMUM OF SIX (6) COPIES OF ALL SHOP DRAWINGS AND SCHEDULES TO THE ARCHITECTS. THE ARCHITECT'S APPROVAL OF SUCH DRAWINGS SHALL NOT RELIEVE THE CONTRACTOR FROM RESPONSIBILITY FOR DEVIATIONS FROM PLANS OR SPECIFICATIONS.

B. CHECKING OF SHOP DRAWINGS IS ONLY FOR CONFORMANCE WITH THE DESIGN CONCEPT OF THE PROJECT AND COMPLIANCE WITH THE INFORMATION GIVEN IN THE CONTRACT DOCUMENTS. CONTRACTOR IS RESPONSIBLE FOR DIMENSIONS TO BE CONFIRMED AND CORRELATED AT THE JOB SITE (NOT FOR INFORMATION THAT PERTAINS SOLELY TO THE FABRICATION PROCESSES OR TO TECHNIQUES OF CONSTRUCTION), AND FOR COORDINATION OF THE WORK BY ALL TRADES.

C. NO SHOP DRAWINGS SHALL BE SUBMITTED TO THE ARCHITECTS UNTIL THEY HAVE FIRST BEEN CHECKED AND APPROVED BY THE CONTRACTOR.

D. APPROVALS FROM ARCHITECT MUST BE OBTAINED PRIOR TO COMMENCING WORK.

E. THE FOLLOWING ITEMS SHALL BE SUBMITTED:
1. INSULATION
2. ALL DRAINS
3. VALVES
4. ALL ITEMS CONSIDERED PLUMBING FIXTURES AND ACCESSORIES UNLESS INDICATED "N.I.C." ON THE DRAWINGS.

15100.14 SUBSTITUTIONS

A. WHERE MANUFACTURER'S NAMES, CATALOG NUMBERS, OR TRADE NAMES APPEAR IN THE DRAWINGS AND SPECIFICATIONS, IT IS NOT THE INTENT TO RESTRICT OR ELIMINATE COMPETITION, BUT MERELY TO ESTABLISH THE QUALITY OR MATERIAL REQUIRED.

B. PRIOR TO BID SUBMISSION, ANY PROPOSED SUBSTITUTIONS WHICH ARE INTENDED MUST CONFORM WITH THE REQUIREMENTS OF THE SPECIFICATIONS. THESE SUBSTITUTIONS MUST BE SUBMITTED, WITH COMPLETE INFORMATION, TO THE ARCHITECT FOR APPROVAL.

15100.15 GUARANTEES

A. THE PLUMBING CONTRACTOR SHALL BE HELD RESPONSIBLE FOR PROPER INSTALLATION OF ALL WORK IN ACCORDANCE WITH THE REQUIREMENTS OF LOCAL AND STATE BUREAUS AND AUTHORITIES HAVING JURISDICTION WITHOUT ADDITIONAL EXPENSE OF THE OWNER.

B. CHANGES OR ADDITIONS TO THE PLUMBING WORK SHOWN ON THE PLANS AS MAY BE REQUIRED IN ORDER TO ACHIEVE COMPLETE COMPLIANCE WITH THE CODES SHALL BE PART OF THIS CONTRACT.

C. SECURE AND PAY FOR ALL APPLICATIONS, PERMITS AND LICENSING AS MAY BE REQUIRED BY GOVERNMENTAL AGENCIES FOR THE PERFORMANCE OF WORK UNDER THIS DIVISION. THIS REQUIREMENT SHALL NOT INCLUDE THE BUILDING PERMIT, WHICH SHALL BE OBTAINED AND PAID FOR BY THE OWNER.

15100.16 TESTS, INSPECTIONS, AND APPROVAL

A. MAKE SUCH TESTS OF THIS WORK AS ARE REQUIRED BY THE PLUMBING CODE OF THE AUTHORITIES HAVING JURISDICTION. ANY LEAKS, DEFECTS, OR DEFICIENCIES SHALL BE IMMEDIATELY REPAIRED OR MADE GOOD, AND TEST SHALL BE REPEATED UNTIL THE TEST REQUIREMENTS ARE FULLY COMPLIED WITH.

B. A CERTIFICATE OF COMPLETION AND ACCEPTANCE FROM LOCAL AUTHORITIES SHALL BE OBTAINED BY THE PLUMBING CONTRACTOR UPON COMPLETION OF ALL WORK PERFORMED UNDER THIS CONTRACT, AND SUCH CERTIFICATES SHALL BE THEN GIVEN TO THE OWNERS.

FIRE PROTECTION AND SPRINKLER SYSTEM SPECIFICATION
DIVISION 15 – MECHANICAL
SECTION 15200 – FIRE PROTECTION AND SPRINKLER SYSTEM

15200.01 GENERAL
A. PROVISIONS OF THE GENERAL CONDITIONS AND SUPPLEMENTARY GENERAL CONDITIONS, WHETHER ATTACHED HERETO OR NOT, SHALL GOVERN ALL WORK UNDER THIS SECTION.

15200.02 SCOPE OF WORK

A. IT IS THE INTENT OF THESE SPECIFICATIONS, FOR THE CONTRACTOR TO FURNISH AND INSTALL COMPLETE WET PIPE SPRINKLER PROTECTION SYSTEMS FOR THE DEMISED SPACE INCLUDING: VALVES, RISERS, AND ALARMS AS REQUIRED. THIS SYSTEM SHALL BE A MODIFICATION TO THE EXISTING BUILDING SPRINKLER SYSTEM. THE CONTRACTOR SHALL BE RESPONSIBLE FOR THE FULL DESIGN ASPECT OF THE SPRINKLER SYSTEM.

B. ALL AREAS WILL BE SPRINKLERED WITH WET-PIPE SYSTEMS.

C. ALL UNHEATED SPACES WITHIN THE BUILDING SHALL BE PROTECTED WITH A DRY PIPE SYSTEM. THIS CONTRACTOR SHALL COMPLY WITH NFPA 13 5-2 DRY PIPE SYSTEMS. NOT MORE THAN 750 GAL SYSTEM SHALL BE CONTROLLED BY ONE DRY-PIPE VALVE.

THE DRY-PIPE VALVE AND SUPPLY PIPE SHALL BE PROTECTED AGAINST FREEZING AND MECHANICAL INJURY. HEAT TAPE SHALL NOT BE USED IN LIEU OF PERMANENTLY INSTALLED TYPE SOURCE OF HEAT. CONTRACTOR SHALL PROVIDE AN APPROVED AIR COMPRESSOR CAPABLE OF RESTORING NORMAL AIR PRESSURE IN THE SYSTEM AUTOMATICALLY.

THE DRY-PIPE SYSTEM SHALL BE PROVIDED WITH ALL THE ALARM SYSTEMS REQUIRED BY CODE.

D. SYSTEMS SHALL BE DESIGNED AND INSTALLED IN STRICT COMPLIANCE WITH NFPA STANDARD NO. 13.

E. ALL ELECTRICAL REQUIREMENTS FOR FIRE PROTECTION AND SPRINKLER SYSTEM ARE TO BE INCLUDED AS PART OF THIS CONTRACTOR'S RESPONSIBILITY. THIS CONTRACTOR SHALL SUB-CONTRACT FOR ALL WIRING AND RELATED COMPONENT REQUIREMENTS WITH SEPARATE ELECTRICAL CONTRACTOR. ALARM WIRING REQUIREMENTS FOR THE FIRE PROTECTION AND ALARM SYSTEM ARE TO BE INCLUDED IN THIS WORK.

15200.03 DESIGN CONSIDERATIONS

A. THE ENTIRE INSTALLATION SHALL BE IN ACCORDANCE WITH THE LATEST RULES AND REGULATIONS OF THE AUTHORITIES HAVING JURISDICTION INCLUDING BUT NOT LIMITED TO, THE CONSTRUCTION CODE IN JURISDICTION, THE LATEST NATIONAL FIRE PROTECTION ASSOCIATION STANDARD NO. 13, OWNER'S INSURANCE UNDERWRITERS.

B. THE SYSTEM SHALL BE HYDRAULICALLY CALCULATED IN ACCORDANCE WITH CHAPTER 7 NFPA 13, DENSITIES SHALL BE AS DIRECTED BY THE INSURANCE UNDERWRITER(S). SPRINKLER PLANS AND CALCULATIONS ARE TO BE PROVIDED TO THE INSURANCE CARRIER FOR APPROVAL PRIOR TO FABRICATION.

15200.04 SHOP DRAWINGS

A. DETAILED DRAWINGS AND CALCULATIONS OF THE SPRINKLER SYSTEM(S), AND SHOP DRAWINGS OF EQUIPMENT, STAMPED AND APPROVED BY AUTHORITIES HAVING JURISDICTION, INCLUDING FIRE MARSHAL AND INSURANCE UNDERWRITERS, ARE REQUIRED FOR THIS WORK. DRAWINGS AND CALCULATIONS, IF REQUIRED, SHALL BE PREPARED, SIGNED AND SEALED BY A LICENSED PROFESSIONAL ENGINEER, SHALL COMPLY WITH NFPA 13, CHAPTER 1-9: "WORKING PLANS."

B. INDICATE ALL DUCTWORK, LIGHTS AND OTHER OBSTRUCTIONS ON SHOP DRAWINGS TO SHOW PROPER INSTALLATION OF ALL SPRINKLER WORK.

C. SUBMIT SUFFICIENT COPIES OF ALL DETAILED SHOP DRAWINGS TO ALL GOVERNING AUTHORITIES AND INSURANCE UNDERWRITERS TO ALLOW A FINAL SUBMITTAL TO TENANT OF SIX(6) COMPLETE SETS BEARING ALL APPROVAL STAMPS.

D. NO WORK SHALL BE INSTALLED UNTIL SHOP DRAWINGS, AS DESCRIBED ABOVE, HAVE BEEN REVIEWED AND APPROVED BY OWNER.

15200.05 WORKMANSHIP AND INSTALLATION

A. ALL SPRINKLER WORK MUST BE DONE BY A QUALIFIED SPRINKLER CONTRACTOR, APPROVED BY THE INSURANCE CARRIER.

B. FURNISH ALL MATERIALS, LABOR, TOOLS, EQUIPMENT AND SUPERVISION REQUIRED FOR THE INSTALLATION OF COMPLETE SYSTEMS AND ALL NECESSARY PIPING, SPRINKLER HEADS, TEST CONNECTIONS, VALVES, DRAINS AND SPRINKLER ALARMS, FLOW SWITCHES, HORNS OR GONGS, DETECTOR CHECK VALVES, SIAMESE FIRE DEPARTMENT CONNECTIONS, PRESSURE GAUGES, AND OTHER REQUIRED COMPONENTS.

C. THE SPRINKLER CONTRACTOR SHALL PROVIDE ALL INTERIOR PIPING, VALVES EQUIPMENT ETC., INCLUDING APPROPRIATE TRANSITION FITTINGS TO ACCOMMODATE CHANGE OF PIPING MATERIAL.

D. ALL SPRINKLER PIPING SHALL BE CONCEALED IN ALL FINISHED AREAS, AVOIDING INTERFERENCE WITH LIGHTS, DUCTS, PIPES, ETC.. BALANCE MAY BE RUN EXPOSED.

E. CUTTING AND NOTCHING OF JOISTS IS NOT ACCEPTABLE.

F. SPRINKLER PIPING SHALL BE INSTALLED AT MAXIMUM HEIGHT ABOVE FLOOR IN ALL LOCATIONS THROUGHOUT ENTIRE BUILDING, UNLESS OTHERWISE SHOWN.

G. DO NOT HANG OR SUPPORT PIPE FROM ROOF DECK.

H. WHEN WELDED AND SEAMLESS STEEL PIPE LISTED IN TABLE 3-1.1.1 OF NFPA 13 IS USED AND JOINED BY WELDING AS REFERENCED IN 3-7.2 (NFPA 13) OR BY ROLL GROOVED PIPE AND COUPLINGS AS REFERENCED IN 3-7.3 (NFPA 13), THE MINIMUM NOMINAL WALL THICKNESS FOR PRESSURES UP TO 300 PSI SHALL BE IN ACCORDANCE WITH SCHEDULE 10 FOR SIZES UP TO 5 IN., 0.134 IN FOR 6 IN., AND 0.188 IN. FOR 8 AND 10 IN. PIPE. WHEN STEEL PIPE (TABLE 3-111) IS USED AND JOINED BY THREADED FITTINGS REFERENCED IN 3-7.1 (NFPA 13) OR BY COUPLINGS USED WITH PIPE HAVING CUT GROOVES, THE MINIMUM WALL THICKNESS SHALL BE IN ACCORDANCE WITH SCHEDULE 40 FOR SIZES LESS THAN 8 IN.

I. ALL INTERIOR PIPING AND FITTINGS TO BE OF TYPE AS RECOMMENDED BY THE INSURANCE UNDERWRITER. ALL MATERIALS SHALL BE NEW, OF THE BEST QUALITY, AND WITH THE SAME BRAND OR MANUFACTURER USED FOR EACH CLASS OF MATERIAL. ALL VALVES SHALL BE U.L. LISTED AND FACTORY MUTUAL APPROVED.

J. ALL NEW SPRINKLER HEADS SHALL BE INSTALLED IN THE CENTER OF THE TILE.

15200.06 SPRINKLER HEADS

A. HEADS IN CUSTOMER AREAS SHALL BE OF CONCEALED TYPE WITH COVER PLATES IN FINISH COLOR AS DETERMINED BY ARCHITECT. HEADS IN FINISHED AREA, AND THEIR ESCUTCHEONS, SHALL BE CHROME PLATED. HEADS IN OTHER AREAS TO BE NATURAL BRASS FINISH. ESCUTCHEONS SHALL HAVE 2" TO 3" ADJUSTABLE DEPTH, 3-1/4" DIAMETER COVERAGE.

B. SPRINKLER HEADS IN CUSTOMER AREA AND OFFICE AREA SHALL BE RATED AT 165 DEGREES F. SPRINKLER HEADS IN STORAGE AREA SHALL BE 212 DEGREES F. RATED HEADS.

C. MAXIMUM COVERAGE FOR EACH CHROME PENDANT SPRINKLER HEAD SHALL NOT EXCEED 130 SQ. FT.

D. A UNIFORM RECTANGULAR PATTERN OF SPRINKLER HEADS SHALL BE MAINTAINED WHEREVER POSSIBLE.

E. INSTALL DEFLECTOR PLATES ON HEADS WHICH ARE LOCATED ADJACENT TO ELECTRICAL EQUIPMENT, TO DIRECT WATER FLOW AWAY FROM EQUIPMENT.

F. ADJACENT TO SUPERVISORY PANEL OR AS DIRECTED, LOCATE STEEL CABINETS CONTAINING TWELVE(12) SPARE CHROME PLATED PENDANT HEADS, TWELVE(12) SPARE NATURAL FINISH UPRIGHT HEADS, AND SIX(6) OTHER TYPE SPRINKLER HEADS (IF INSTALLED).

1. PROVIDE ONE(1) SPRINKLER WRENCH FOR EACH SIZE AND TYPE OF HEAD.

G. SPRINKLERS LOCATED 7'-6" OR LESS FROM FLOOR TO BE PROTECTED WITH APPROVED GUARDS.

15200.7 CERTIFICATION

A. WHEN COMPLETED, THE ENTIRE PIPING SYSTEM SHALL BE TESTED AS REQUIRED BY THE RULES AND REGULATIONS OF THE AUTHORITIES HAVING JURISDICTION, AND MUST BE FREE OF LEAKS AND OTHER DEFECTS.

B. SPRINKLER CONTRACTOR MUST SUBMIT CERTIFICATION FROM THE INSURANCE CARRIER AND ANY OTHER AGENCIES HAVING JURISDICTION, INDICATING THAT THE SYSTEMS ARE APPROVED AS INSTALLED.

15200.8 GUARANTEE

A. ALL EQUIPMENT AND WORKMANSHIP SHALL BE GUARANTEED FOR A PERIOD OF ONE(1) YEAR AFTER ACCEPTANCE BY THE OWNER AND ARCHITECT, AGAINST DEFECTIVE MATERIALS AND LABOR AND IMPROPER DESIGN.

END OF FIRE PROTECTION AND SPRINKLER SYSTEM SPECIFICATION

END OF PLUMBING SPECIFICATIONS

1 PLUMBING SPECIFICATIONS.

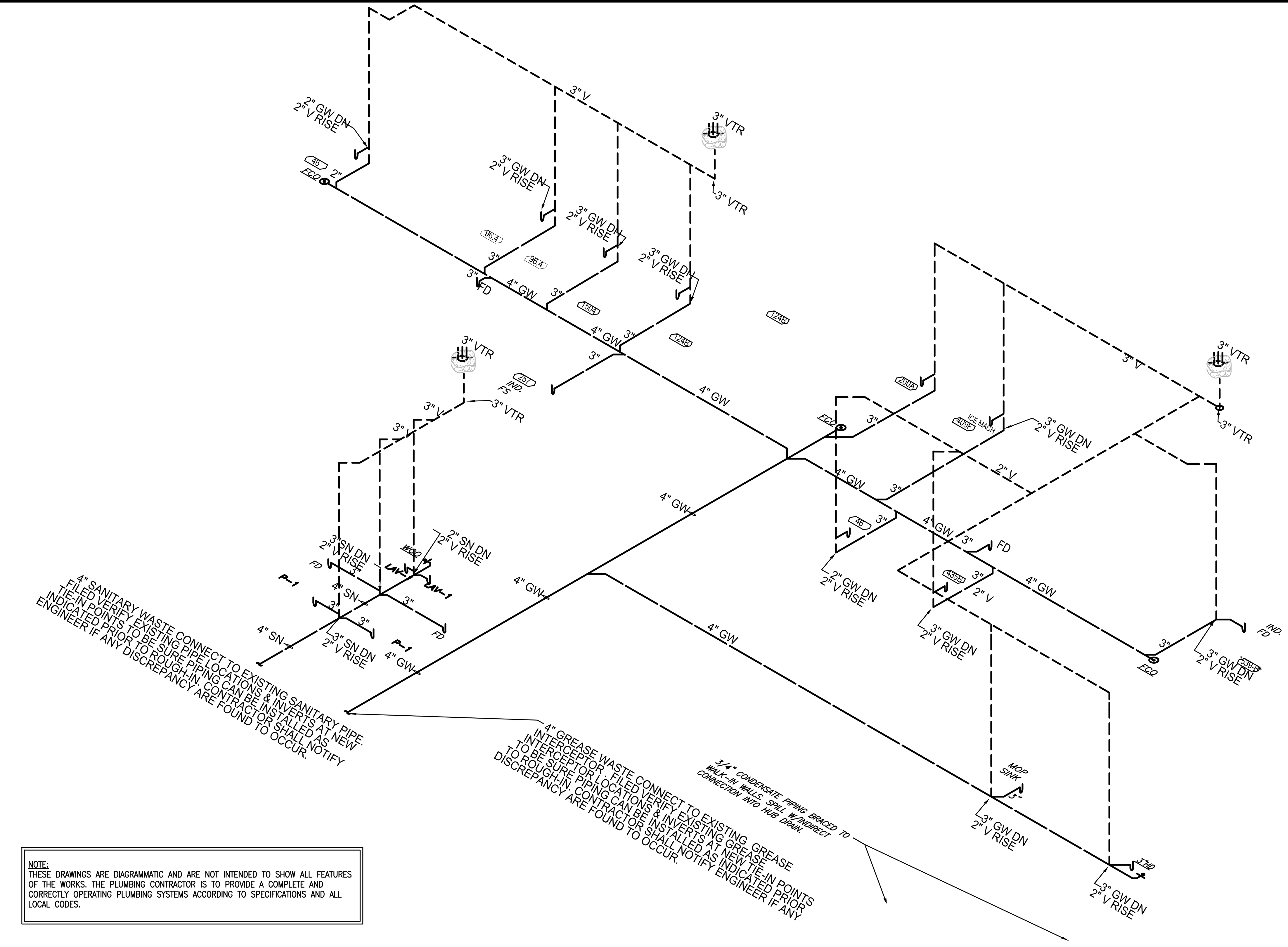

NOTE:
THESE DRAWINGS ARE DIAGRAMMATIC AND ARE NOT INTENDED TO SHOW ALL FEATURES OF THE WORKS. THE PLUMBING CONTRACTOR IS TO PROVIDE A COMPLETE AND CORRECTLY OPERATING PLUMBING SYSTEMS ACCORDING TO SPECIFICATIONS AND ALL LOCAL CODES.

2 SANITARY AND VENTING ISOMETRIC RISER DIAGRAM SCALE: NONE

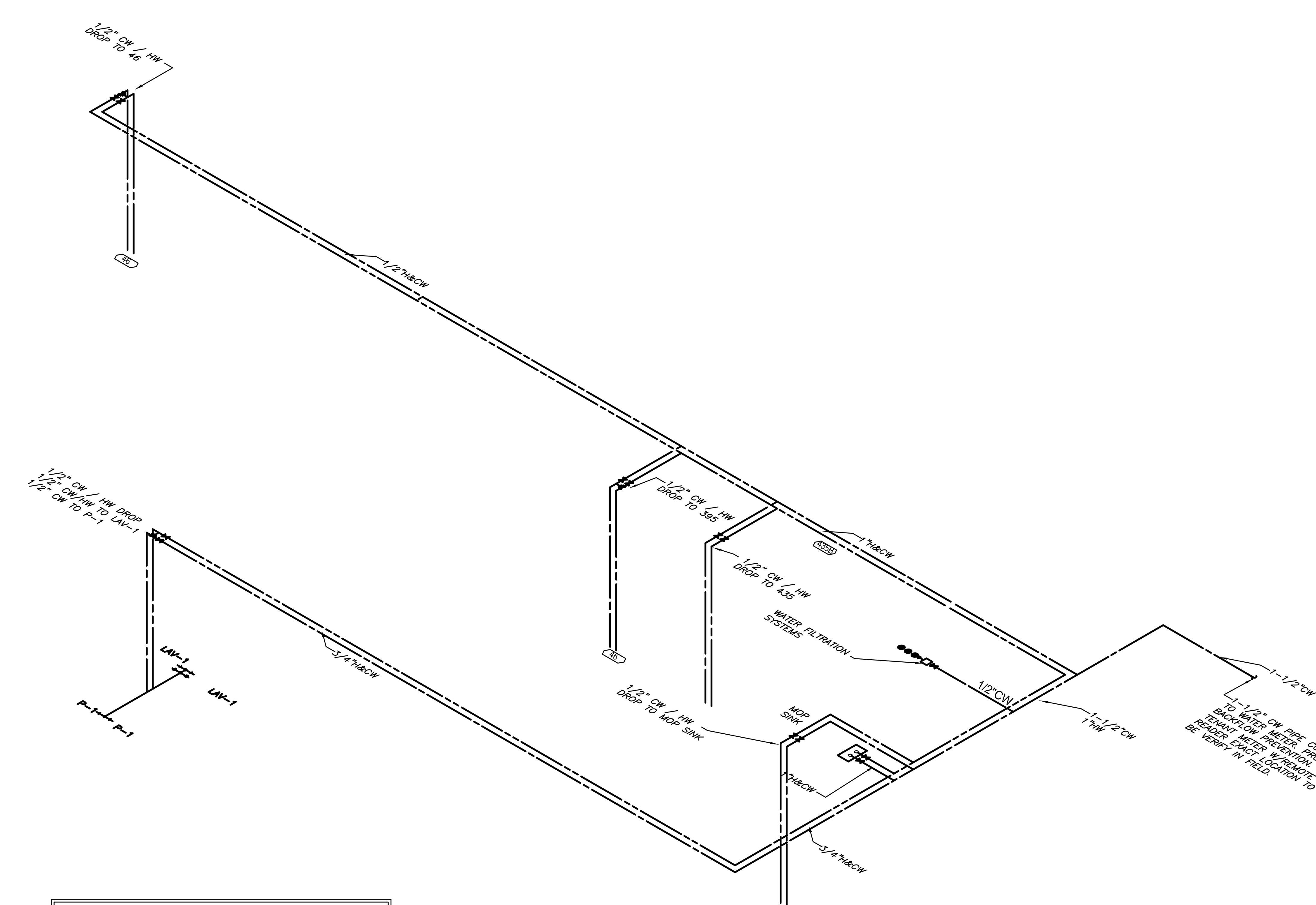

NOTE:
THESE DRAWINGS ARE DIAGRAMMATIC AND ARE NOT INTENDED TO SHOW ALL FEATURES OF THE WORKS. THE PLUMBING CONTRACTOR IS TO PROVIDE A COMPLETE AND CORRECTLY OPERATING PLUMBING SYSTEMS ACCORDING TO SPECIFICATIONS AND ALL LOCAL CODES.

3 HOT & COLD WATER ISOMETRIC DIAGRAM. SCALE: NONE

ALBERT TAUS & ASSOCIATES, ARCHITECTS
ALBERT TAUS, A.I.A., ARCHITECT
ARCHITECTURE·PLANNING·INTERIOR DESIGN·ENGINEERING
PHILADELPHIA, PA
PHONE: (215) 698-2516 · FAX: (215) 698-7398
atausarchitects.com

THESE PLANS ARE THE PROPERTY OF ALBERT TAUS & ASSOCIATES, ARCHITECTS, AND ARE NOT TO BE USED WITHOUT THE EXPRESSED WRITTEN PERMISSION OR CONSENT OF ALBERT A. TAUS, R.A., A.I.A.

STATE OF MISSOURI — ALBERT A. TAUS — NUMBER A-2015032715 — ARCHITECT
SIGNATURE

DOCUMENTS PREPARED FOR
DDW21DOUGLAS, LLC
C/O: MR. HOSSAM SHAHIN
109 E. HALE LAKE RD
WARRENSBURG, MO 64093
ATA200602.10

DATE	04/16/21
SCALE	AS NOTED
DRAWN	
CKD	DJK
APPD	AAT

NO	DESCRIPTION	DATE
6		
5		
4		
3		
2		
1		
–	ISSUED FOR PERMIT	4-29-21

REVISIONS

PROPOSED PROJECT
DUNKIN'
WITH DRIVE THRU
1100 NE DOUGLAS STREET
LEE'S SUMMIT MO. 64086
NEXT GEN (COOL PALAETTE)
PLUMBING SPECIFICATIONS & RISER DIAGRAMS

THESE PLANS ARE CONFIDENTIAL PROPERTY OF DUNKIN' BRANDS INC. UNDER RESTRICTED ACCESS.

DUNKIN' BRANDS [eatdrinkthink]

P6.1