RE: 210319
Lot 64 W2

MiTek USA, Inc.
16023 Swingley Ridge Rd
Chesterfield, MO 63017
314-434-1200

Site Information:

Customer: Project Name: 210319
Lot/Block: Model:
Address: Subdivision:
City: State:

RELEASE FOR CONSTRUCTION
AS NOTED ON PLANS REVIEW
DEVELOPMENT SERVICES
LEE'S SUMMIT, MISSOURI
04/19/2021

General Truss Engineering Criteria & Design Loads (Individual Truss Design Drawings Show Special Loading Conditions):

Design Code: IRC2018/TPI2014 Design Program: MiTek 20/20 8.4
Wind Code: N/A Wind Speed: 115 mph
Roof Load: 45.0 psf Floor Load: N/A psf

This package includes 49 individual, dated Truss Design Drawings and 0 Additional Drawings.

No.	Seal#	Truss Name	Date	No.	Seal#	Truss Name	Date
1	I45078941	A1	3/5/2021	21	I45078961	C5	3/5/2021
2	I45078942	A2	3/5/2021	22	I45078962	C5A	3/5/2021
3	I45078943	A3	3/5/2021	23	I45078963	C6	3/5/2021
4	I45078944	A4	3/5/2021	24	I45078964	C7	3/5/2021
5	I45078945	B1	3/5/2021	25	I45078965	C8	3/5/2021
6	I45078946	B2	3/5/2021	26	I45078966	C9	3/5/2021
7	I45078947	B3	3/5/2021	27	I45078967	D1	3/5/2021
8	I45078948	B4	3/5/2021	28	I45078968	D2	3/5/2021
9	I45078949	B5	3/5/2021	29	I45078969	E1	3/5/2021
10	I45078950	B6	3/5/2021	30	I45078970	E2	3/5/2021
11	I45078951	B7	3/5/2021	31	I45078971	E3	3/5/2021
12	I45078952	B8	3/5/2021	32	I45078972	J1	3/5/2021
13	I45078953	B9	3/5/2021	33	I45078973	J2	3/5/2021
14	I45078954	B10	3/5/2021	34	I45078974	J3	3/5/2021
15	I45078955	B11	3/5/2021	35	I45078975	J4	3/5/2021
16	I45078956	B12	3/5/2021	36	I45078976	J5	3/5/2021
17	I45078957	C1	3/5/2021	37	I45078977	J6	3/5/2021
18	I45078958	C2	3/5/2021	38	I45078978	J7	3/5/2021
19	I45078959	C3	3/5/2021	39	I45078979	J8	3/5/2021
20	I45078960	C4	3/5/2021	40	I45078980	LAY1	3/5/2021

The truss drawing(s) referenced above have been prepared by MiTek USA, Inc under my direct supervision based on the parameters provided by Wheeler - Waverly.

Truss Design Engineer's Name: Garcia, Juan
My license renewal date for the state of Kansas is April 30, 2022.
Kansas COA: E-943

IMPORTANT NOTE: The seal on these truss component designs is a certification that the engineer named is licensed in the jurisdiction(s) identified and that the designs comply with ANSI/TPI 1. These designs are based upon parameters shown (e.g., loads, supports, dimensions, shapes and design codes), which were given to MiTek. Any project specific information included is for MiTek customers file reference purpose only, and was not taken into account in the preparation of these designs. MiTek has not independently verified the applicability of the design parameters or the designs for any particular building. Before use, the building designer should verify applicability of design parameters and properly incorporate these designs into the overall building design per ANSI/TPI 1, Chapter 2.

JUAN GARCIA
LICENSED
16952
KANSAS
PROFESSIONAL ENGINEER

March 05, 2021

Garcia, Juan

RE: 210319 - Lot 64 W2

MiTek USA, Inc.
16023 Swingley Ridge Rd
Chesterfield, MO 63017
314-434-1200

Site Information:

Project Customer: Project Name: 210319
Lot/Block: Subdivision:
Address:
City, County: State:

No.	Seal#	Truss Name	Date
41	I45078981	V1A	3/5/2021
42	I45078982	V2	3/5/2021
43	I45078983	V3	3/5/2021
44	I45078984	V4	3/5/2021
45	I45078985	V5	3/5/2021
46	I45078986	V6	3/5/2021
47	I45078987	V7	3/5/2021
48	I45078988	V8	3/5/2021
49	I45078989	V9	3/5/2021

RE: 210319
Lot 64 W2

MiTek USA, Inc.
16023 Swingley Ridge Rd
Chesterfield, MO 63017
314-434-1200

Site Information:

Customer: Project Name: 210319
Lot/Block: Model:
Address: Subdivision:
City: State:

General Truss Engineering Criteria & Design Loads (Individual Truss Design Drawings Show Special Loading Conditions):

Design Code: IRC2018/TPI2014 Design Program: MiTek 20/20 8.4
Wind Code: N/A Wind Speed: 115 mph
Roof Load: 45.0 psf Floor Load: N/A psf

This package includes 49 individual, dated Truss Design Drawings and 0 Additional Drawings.

No.	Seal#	Truss Name	Date	No.	Seal#	Truss Name	Date
1	I45078941	A1	3/5/2021	21	I45078961	C5	3/5/2021
2	I45078942	A2	3/5/2021	22	I45078962	C5A	3/5/2021
3	I45078943	A3	3/5/2021	23	I45078963	C6	3/5/2021
4	I45078944	A4	3/5/2021	24	I45078964	C7	3/5/2021
5	I45078945	B1	3/5/2021	25	I45078965	C8	3/5/2021
6	I45078946	B2	3/5/2021	26	I45078966	C9	3/5/2021
7	I45078947	B3	3/5/2021	27	I45078967	D1	3/5/2021
8	I45078948	B4	3/5/2021	28	I45078968	D2	3/5/2021
9	I45078949	B5	3/5/2021	29	I45078969	E1	3/5/2021
10	I45078950	B6	3/5/2021	30	I45078970	E2	3/5/2021
11	I45078951	B7	3/5/2021	31	I45078971	E3	3/5/2021
12	I45078952	B8	3/5/2021	32	I45078972	J1	3/5/2021
13	I45078953	B9	3/5/2021	33	I45078973	J2	3/5/2021
14	I45078954	B10	3/5/2021	34	I45078974	J3	3/5/2021
15	I45078955	B11	3/5/2021	35	I45078975	J4	3/5/2021
16	I45078956	B12	3/5/2021	36	I45078976	J5	3/5/2021
17	I45078957	C1	3/5/2021	37	I45078977	J6	3/5/2021
18	I45078958	C2	3/5/2021	38	I45078978	J7	3/5/2021
19	I45078959	C3	3/5/2021	39	I45078979	J8	3/5/2021
20	I45078960	C4	3/5/2021	40	I45078980	LAY1	3/5/2021

The truss drawing(s) referenced above have been prepared by
MiTek USA, Inc under my direct supervision
based on the parameters provided by Wheeler - Waverly.

Truss Design Engineer's Name: Garcia, Juan

My license renewal date for the state of Missouri is December 31, 2022.

Missouri COA: 001193

IMPORTANT NOTE: The seal on these truss component designs is a certification that the engineer named is licensed in the jurisdiction(s) identified and that the designs comply with ANSI/TPI 1. These designs are based upon parameters shown (e.g., loads, supports, dimensions, shapes and design codes), which were given to MiTek. Any project specific information included is for MiTek customers file reference purpose only, and was not taken into account in the preparation of these designs. MiTek has not independently verified the applicability of the design parameters or the designs for any particular building. Before use, the building designer should verify applicability of design parameters and properly incorporate these designs into the overall building design per ANSI/TPI 1, Chapter 2.

STATE OF MISSOURI
JUAN GARCIA
NUMBER E-2000162101
PROFESSIONAL ENGINEER

March 05, 2021

Garcia, Juan

RE: 210319 - Lot 64 W2

MiTek USA, Inc.
16023 Swingley Ridge Rd
Chesterfield, MO 63017
314-434-1200

Site Information:

Project Customer: Project Name: 210319
Lot/Block: Subdivision:
Address:
City, County: State:

No.	Seal#	Truss Name	Date
41	I45078981	V1A	3/5/2021
42	I45078982	V2	3/5/2021
43	I45078983	V3	3/5/2021
44	I45078984	V4	3/5/2021
45	I45078985	V5	3/5/2021
46	I45078986	V6	3/5/2021
47	I45078987	V7	3/5/2021
48	I45078988	V8	3/5/2021
49	I45078989	V9	3/5/2021

Job	Truss	Truss Type	Qty	Ply	Lot 64 W2
210319	A1	Hip Girder	1	2	I45078941 Job Reference (optional)

Wheeler Lumber, Waverly, KS - 66871, 8.430 s Feb 12 2021 MiTek Industries, Inc. Fri Mar 5 13:50:03 2021 Page 1
ID:pq50?Ycap6WpLXoTu4wfY2za1nE-6SlC8weAtUisKlL3M5UvuhFy9mFM8OJufTTi5ZzdyMI

-0-10-8	2-0-0	3-10-8	10-1-8	12-0-0	14-0-0	14-10-8
0-10-8	2-0-0	1-10-8	6-3-0	1-10-8	2-0-0	0-10-8

Scale = 1:26.5

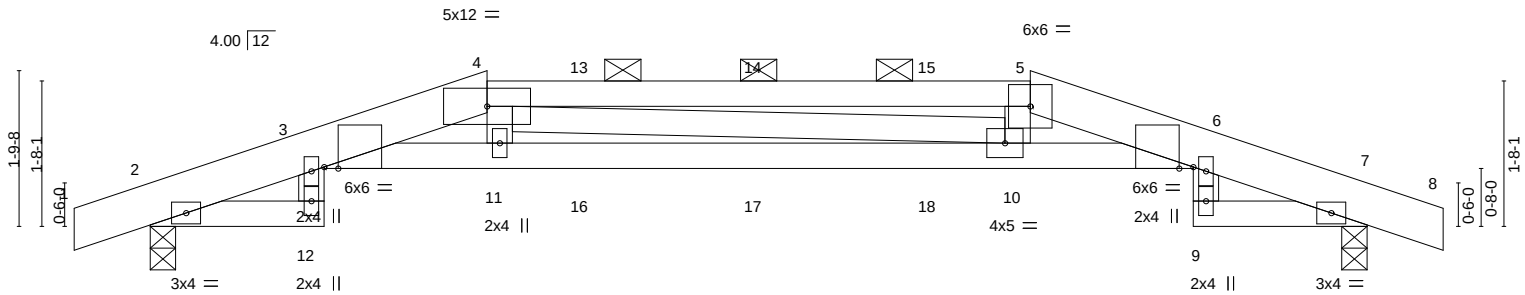

2-0-0	3-10-8	10-1-8	12-0-0	14-0-0
2-0-0	1-10-8	6-3-0	1-10-8	2-0-0

Plate Offsets (X,Y)-- [3:0-1-15,Edge], [6:0-1-15,Edge]

LOADING (psf)		SPACING- 2-0-0		CSI.		DEFL.	in	(loc)	l/defl	L/d	PLATES	GRIP
TCLL	25.0	Plate Grip DOL	1.15	TC	0.80	Vert(LL)	-0.18	10-11	>925	360	MT20	197/144
TCDL	10.0	Lumber DOL	1.15	BC	0.72	Vert(CT)	-0.34	10-11	>490	240		
BCLL	0.0 *	Rep Stress Incr	NO	WB	0.03	Horz(CT)	0.18	7	n/a	n/a		
BCDL	10.0	Code IRC2018/TPI2014		Matrix-S		Wind(LL)	0.16	10-11	>999	240	Weight: 100 lb	FT = 10%

LUMBER-
TOP CHORD 2x6 SPF No.2 *Except*
4-5: 2x4 SPF No.2
BOT CHORD 2x4 SPF No.2
WEBS 2x4 SPF No.2

BRACING-
TOP CHORD Structural wood sheathing directly applied or 6-0-0 oc purlins, except 2-0-0 oc purlins (4-6-12 max.): 4-5.
BOT CHORD Rigid ceiling directly applied or 10-0-0 oc bracing.

REACTIONS. (size) 2=0-3-8, 7=0-3-8
Max Horz 2=-28(LC 9)
Max Uplift 2=-261(LC 4), 7=-261(LC 5)
Max Grav 2=1052(LC 1), 7=1052(LC 1)

FORCES. (lb) - Max. Comp./Max. Ten. - All forces 250 (lb) or less except when shown.
TOP CHORD 2-3=-431/118, 3-4=-4367/973, 4-5=-4350/946, 5-6=-4321/939, 6-7=-431/115
BOT CHORD 3-11=-947/4352, 10-11=-938/4395, 6-10=-900/4304
WEBS 4-11=0/283, 5-10=0/294

NOTES-
1) 2-ply truss to be connected together with 10d (0.131"x3") nails as follows:
Top chords connected as follows: 2x6 - 2 rows staggered at 0-9-0 oc, 2x4 - 1 row at 0-9-0 oc.
Bottom chords connected as follows: 2x4 - 1 row at 0-9-0 oc.
Webs connected as follows: 2x4 - 1 row at 0-9-0 oc.
2) All loads are considered equally applied to all plies, except if noted as front (F) or back (B) face in the LOAD CASE(S) section. Ply to ply connections have been provided to distribute only loads noted as (F) or (B), unless otherwise indicated.
3) Unbalanced roof live loads have been considered for this design.
4) Wind: ASCE 7-16; Vult=115mph (3-second gust) Vasd=91mph; TCDL=6.0psf; BCDL=6.0psf; h=25ft; Cat. II; Exp C; Enclosed; MWFRS (envelope) gable end zone; cantilever left and right exposed ; end vertical left and right exposed; Lumber DOL=1.60 plate grip DOL=1.60
5) Provide adequate drainage to prevent water ponding.
6) This truss has been designed for a 10.0 psf bottom chord live load nonconcurrent with any other live loads.
7) * This truss has been designed for a live load of 20.0psf on the bottom chord in all areas where a rectangle 3-6-0 tall by 2-0-0 wide will fit between the bottom chord and any other members.
8) Provide mechanical connection (by others) of truss to bearing plate capable of withstanding 100 lb uplift at joint(s) except (jt=lb) 2=261, 7=261.
9) This truss is designed in accordance with the 2018 International Residential Code sections R502.11.1 and R802.10.2 and referenced standard ANSI/TPI 1.
10) Graphical purlin representation does not depict the size or the orientation of the purlin along the top and/or bottom chord.
11) Hanger(s) or other connection device(s) shall be provided sufficient to support concentrated load(s) 97 lb down and 60 lb up at 3-10-8, 97 lb down and 60 lb up at 5-0-0, 97 lb down and 60 lb up at 7-0-0, and 97 lb down and 60 lb up at 9-0-0, and 97 lb down and 60 lb up at 10-1-8 on top chord, and 195 lb down and 68 lb up at 3-10-8, 12 lb down at 5-0-0, 12 lb down at 7-0-0, and 12 lb down at 9-0-0, and 195 lb down and 68 lb up at 10-0-12 on bottom chord. The design/selection of such connection device(s) is the responsibility of others.

Continued on page 2

LOAD CASE(S) Standard

STATE OF MISSOURI
JUAN GARCIA
NUMBER E-2000162101
PROFESSIONAL ENGINEER

JUAN GARCIA
LICENSED
16952
KANSAS
PROFESSIONAL ENGINEER

March 5,2021

MiTek
16023 Swingley Ridge Rd
Chesterfield, MO 63017

LOAD CASE(S) Standard

1) Dead + Roof Live (balanced): Lumber Increase=1.15, Plate Increase=1.15
   Uniform Loads (plf)
   Vert: 1-3=-70, 3-4=-70, 4-5=-70, 5-6=-70, 6-8=-70, 2-12=-20, 3-6=-20, 7-9=-20
   Concentrated Loads (lb)
   Vert: 4=-65(F) 5=-65(F) 11=-195(F) 10=-195(F) 13=-65(F) 14=-65(F) 15=-65(F) 16=-4(F) 17=-4(F) 18=-4(F)

Job	Truss	Truss Type	Qty	Ply	Lot 64 W2
210319	A2	Hip	1	1	I45078942 Job Reference (optional)

Wheeler Lumber, Waverly, KS - 66871, 8.430 s Feb 12 2021 MiTek Industries, Inc. Fri Mar 5 13:50:04 2021 Page 1
ID:pq50?Ycap6WpLXoTu4wfY2za1nE-aeJaMGfoeoqiyvwFwo?8Quo4zAXOtqs1u7CGd?zdyMH

1-7-8	5-6-0	7-9-0	11-7-8	13-7-8	14-6-0
1-7-8	3-10-8	2-3-0	3-10-8	2-0-0	0-10-8

Scale = 1:24.9

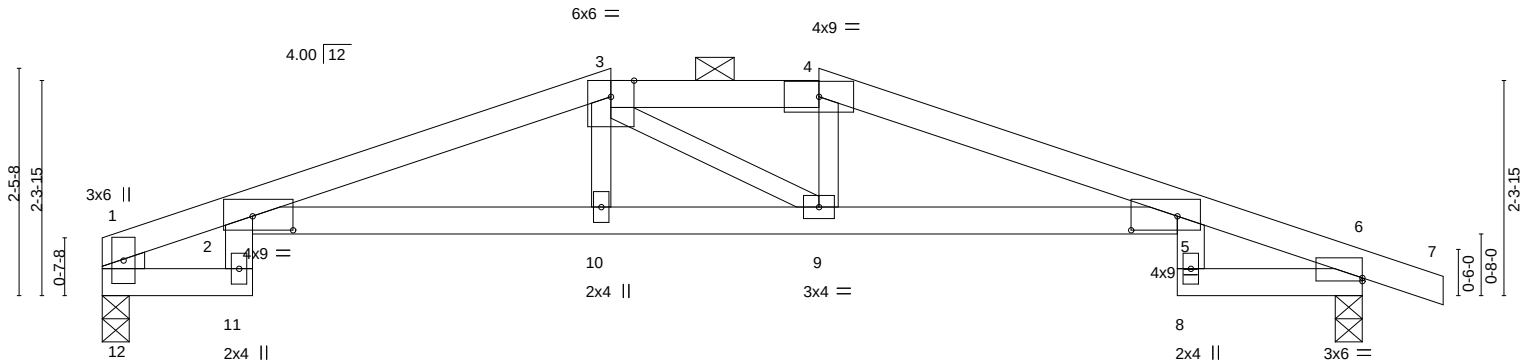

1-7-8	5-6-0	7-9-0	11-7-8	13-7-8
1-7-8	3-10-8	2-3-0	3-10-8	2-0-0

Plate Offsets (X,Y)-- [2:0-5-4,0-1-13], [5:0-6-0,0-1-13], [6:0-0-0,0-0-6]

LOADING (psf)		**SPACING-** 2-0-0	**CSI.**		**DEFL.** in (loc) l/defl L/d	**PLATES**	**GRIP**
TCLL	25.0	Plate Grip DOL 1.15	TC	0.99	Vert(LL) -0.27 5-9 >581 360	MT20	197/144
TCDL	10.0	Lumber DOL 1.15	BC	0.99	Vert(CT) -0.50 5-9 >321 240		
BCLL	0.0 *	Rep Stress Incr YES	WB	0.08	Horz(CT) 0.40 6 n/a n/a		
BCDL	10.0	Code IRC2018/TPI2014	Matrix-S		Wind(LL) 0.19 5-9 >824 240	Weight: 39 lb	FT = 10%

LUMBER-
TOP CHORD 2x4 SPF 2100F 1.8E *Except*
3-4: 2x4 SPF No.2
BOT CHORD 2x4 SPF No.2
WEBS 2x3 SPF No.2 *Except*
2-11,5-8: 2x4 SPF No.2, 1-12: 2x6 SPF No.2

BRACING-
TOP CHORD Structural wood sheathing directly applied, except end verticals, and 2-0-0 oc purlins (4-7-2 max.): 3-4.
BOT CHORD Rigid ceiling directly applied or 10-0-0 oc bracing, Except: 2-2-0 oc bracing: 5-9.

REACTIONS. (size) 12=0-3-8, 6=0-3-8
Max Horz 12=-41(LC 13)
Max Uplift 12=-93(LC 4), 6=-140(LC 5)
Max Grav 12=593(LC 1), 6=670(LC 1)

FORCES. (lb) - Max. Comp./Max. Ten. - All forces 250 (lb) or less except when shown.
TOP CHORD 2-3=-1495/215, 3-4=-1478/224, 4-5=-1549/205, 5-6=-285/64, 1-12=-644/113
BOT CHORD 2-10=-169/1425, 9-10=-171/1419, 5-9=-133/1483

NOTES-
1) Unbalanced roof live loads have been considered for this design.
2) Wind: ASCE 7-16; Vult=115mph (3-second gust) Vasd=91mph; TCDL=6.0psf; BCDL=6.0psf; h=25ft; Cat. II; Exp C; Enclosed; MWFRS (envelope) gable end zone; cantilever left and right exposed ; end vertical left and right exposed; Lumber DOL=1.60 plate grip DOL=1.60
3) Provide adequate drainage to prevent water ponding.
4) This truss has been designed for a 10.0 psf bottom chord live load nonconcurrent with any other live loads.
5) * This truss has been designed for a live load of 20.0psf on the bottom chord in all areas where a rectangle 3-6-0 tall by 2-0-0 wide will fit between the bottom chord and any other members.
6) Provide mechanical connection (by others) of truss to bearing plate capable of withstanding 100 lb uplift at joint(s) 12 except (jt=lb) 6=140.
7) This truss is designed in accordance with the 2018 International Residential Code sections R502.11.1 and R802.10.2 and referenced standard ANSI/TPI 1.
8) Graphical purlin representation does not depict the size or the orientation of the purlin along the top and/or bottom chord.

STATE OF MISSOURI
JUAN GARCIA
NUMBER E-2000162101
PROFESSIONAL ENGINEER

JUAN GARCIA
LICENSED
16952
KANSAS
PROFESSIONAL ENGINEER

March 5,2021

MiTek
16023 Swingley Ridge Rd
Chesterfield, MO 63017

Job	Truss	Truss Type	Qty	Ply	Lot 64 W2
210319	A3	Roof Special	1	1	I45078943 Job Reference (optional)

Wheeler Lumber, Waverly, KS - 66871, 8.430 s Feb 12 2021 MiTek Industries, Inc. Fri Mar 5 13:50:05 2021 Page 1
ID:pq50?Ycap6WpLXoTu4wfY2za1nE-2rtyZcgQP6yZZ3VRUWWNz6LFjayocHpB7nypASzdyMG

1-7-8	6-7-8	11-7-8	13-7-8	14-6-0
1-7-8	5-0-0	5-0-0	2-0-0	0-10-8

Scale = 1:24.3

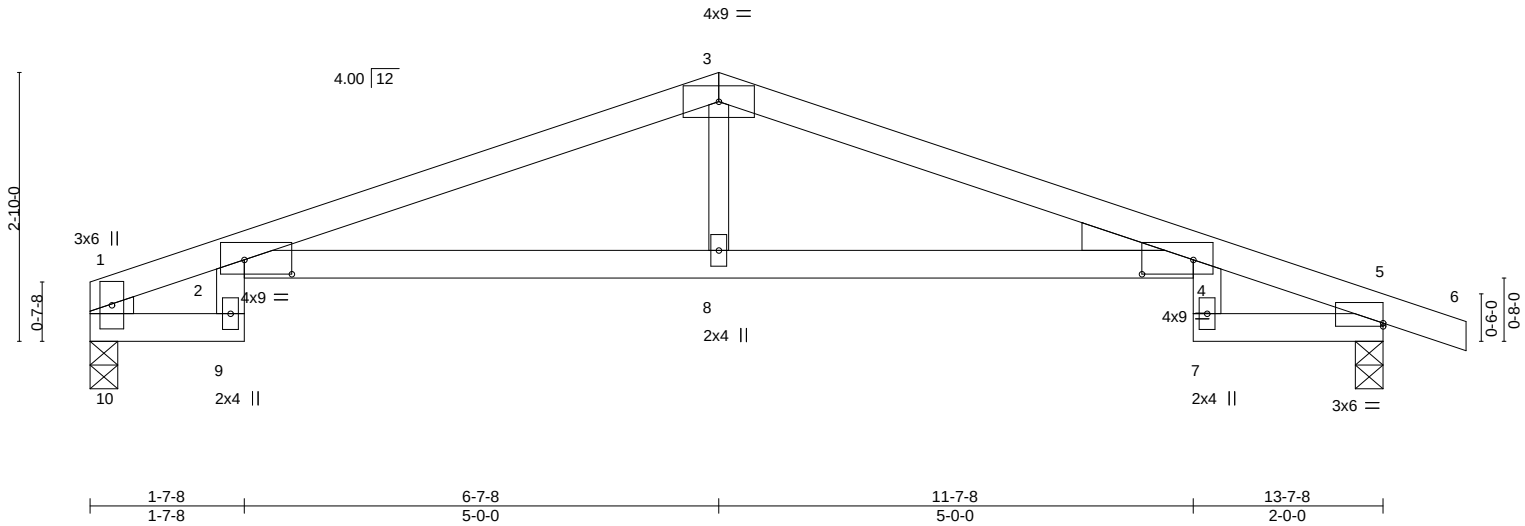

Plate Offsets (X,Y)-- [2:0-6-0,0-1-13], [4:0-6-8,0-1-13], [5:0-0-0,0-0-6]

LOADING (psf)		SPACING- 2-0-0		CSI.		DEFL.	in	(loc)	l/defl	L/d	PLATES	GRIP
TCLL	25.0	Plate Grip DOL	1.15	TC	0.99	Vert(LL)	-0.30	4-8	>527	360	MT20	197/144
TCDL	10.0	Lumber DOL	1.15	BC	0.66	Vert(CT)	-0.55	4-8	>292	240		
BCLL	0.0 *	Rep Stress Incr	YES	WB	0.10	Horz(CT)	0.43	5	n/a	n/a		
BCDL	10.0	Code IRC2018/TPI2014		Matrix-S		Wind(LL)	0.21	4-8	>747	240	Weight: 37 lb	FT = 10%

LUMBER-
TOP CHORD 2x4 SPF 2100F 1.8E
BOT CHORD 2x4 SPF No.2 *Except*
2-4: 2x4 SPF 2100F 1.8E
WEBS 2x4 SPF No.2 *Except*
3-8: 2x3 SPF No.2, 1-10: 2x6 SPF No.2
WEDGE
Right: 2x4 SP No.3

BRACING-
TOP CHORD Structural wood sheathing directly applied, except end verticals.
BOT CHORD Rigid ceiling directly applied or 10-0-0 oc bracing.

REACTIONS. (size) 10=0-3-8, 5=0-3-8
Max Horz 10=-49(LC 9)
Max Uplift 10=-85(LC 4), 5=-133(LC 5)
Max Grav 10=593(LC 1), 5=670(LC 1)

FORCES. (lb) - Max. Comp./Max. Ten. - All forces 250 (lb) or less except when shown.
TOP CHORD 2-3=-1362/150, 3-4=-1355/162, 4-5=-285/60, 1-10=-644/105
BOT CHORD 2-8=-100/1283, 4-8=-100/1283
WEBS 3-8=0/304

NOTES-
1) Unbalanced roof live loads have been considered for this design.
2) Wind: ASCE 7-16; Vult=115mph (3-second gust) Vasd=91mph; TCDL=6.0psf; BCDL=6.0psf; h=25ft; Cat. II; Exp C; Enclosed; MWFRS (envelope) gable end zone; cantilever left and right exposed ; end vertical left and right exposed; Lumber DOL=1.60 plate grip DOL=1.60
3) This truss has been designed for a 10.0 psf bottom chord live load nonconcurrent with any other live loads.
4) * This truss has been designed for a live load of 20.0psf on the bottom chord in all areas where a rectangle 3-6-0 tall by 2-0-0 wide will fit between the bottom chord and any other members.
5) Provide mechanical connection (by others) of truss to bearing plate capable of withstanding 100 lb uplift at joint(s) 10 except (jt=lb) 5=133.
6) This truss is designed in accordance with the 2018 International Residential Code sections R502.11.1 and R802.10.2 and referenced standard ANSI/TPI 1.

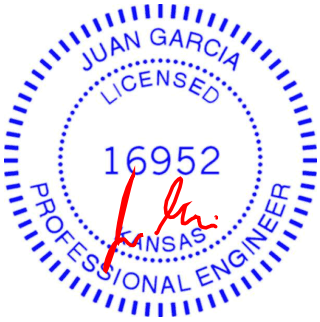

March 5,2021

MiTek
16023 Swingley Ridge Rd
Chesterfield, MO 63017

Job	Truss	Truss Type	Qty	Ply	Lot 64 W2
210319	A4	Common	1	1	I45078944 Job Reference (optional)

Wheeler Lumber, Waverly, KS - 66871, 8.430 s Feb 12 2021 MiTek Industries, Inc. Fri Mar 5 13:50:06 2021 Page 1
ID:pq50?Ycap6WpLXoTu4wfY2za1nE-X1RKnyg3AP4QBD4e1D2cWJtTizKHLj8KLRhNiuzdyMF

6-7-8 | 13-7-8 | 14-6-0
6-7-8 | 7-0-0 | 0-10-8

Scale: 1/2"=1'

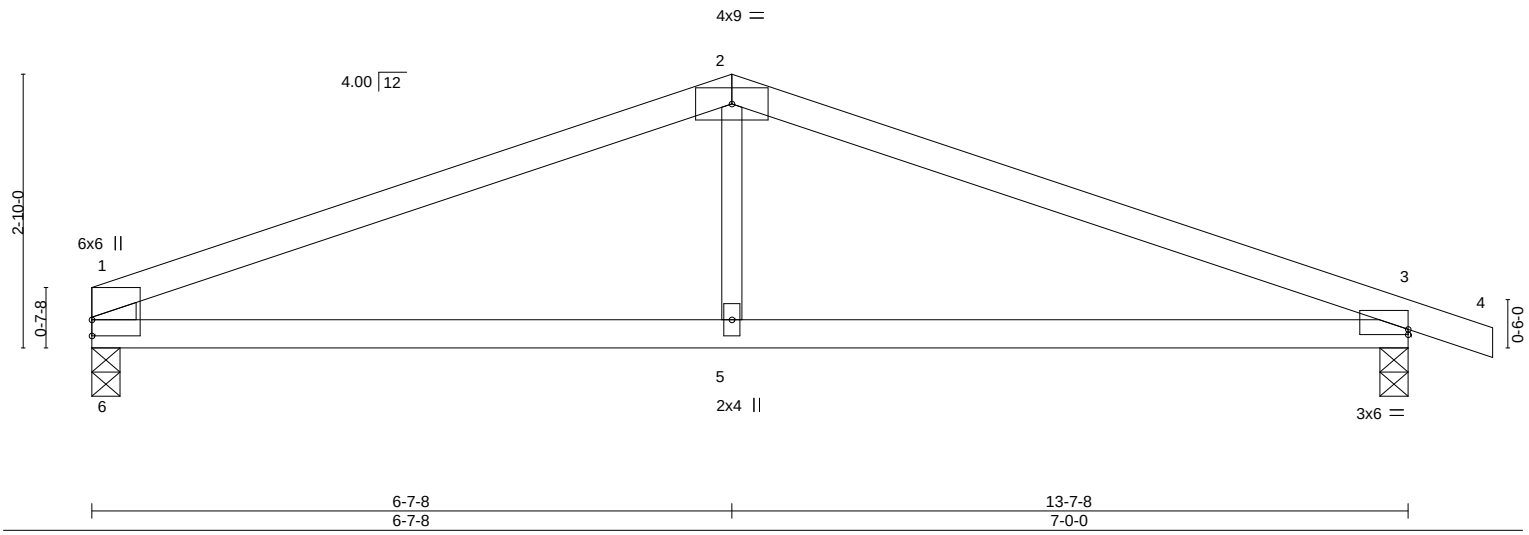

Plate Offsets (X,Y)-- [3:0-0-0,0-0-10]

LOADING (psf)		SPACING- 2-0-0		CSI.		DEFL.	in	(loc)	l/defl	L/d	PLATES	GRIP
TCLL	25.0	Plate Grip DOL	1.15	TC	0.78	Vert(LL)	-0.08	3-5	>999	360	MT20	197/144
TCDL	10.0	Lumber DOL	1.15	BC	0.51	Vert(CT)	-0.19	3-5	>854	240		
BCLL	0.0 *	Rep Stress Incr	YES	WB	0.09	Horz(CT)	0.02	3	n/a	n/a		
BCDL	10.0	Code IRC2018/TPI2014		Matrix-S		Wind(LL)	0.07	3-5	>999	240	Weight: 35 lb	FT = 10%

LUMBER-
TOP CHORD 2x4 SPF No.2
BOT CHORD 2x4 SPF No.2
WEBS 2x3 SPF No.2 *Except*
1-6: 2x6 SP DSS

BRACING-
TOP CHORD Structural wood sheathing directly applied or 2-11-15 oc purlins, except end verticals.
BOT CHORD Rigid ceiling directly applied or 10-0-0 oc bracing.

REACTIONS. (size) 6=0-3-8, 3=0-3-8
Max Horz 6=-49(LC 13)
Max Uplift 6=-85(LC 4), 3=-133(LC 5)
Max Grav 6=593(LC 1), 3=670(LC 1)

FORCES. (lb) - Max. Comp./Max. Ten. - All forces 250 (lb) or less except when shown.
TOP CHORD 1-2=-985/125, 2-3=-1002/123, 1-6=-524/123
BOT CHORD 5-6=-65/864, 3-5=-65/864
WEBS 2-5=0/290

NOTES-
1) Unbalanced roof live loads have been considered for this design.
2) Wind: ASCE 7-16; Vult=115mph (3-second gust) Vasd=91mph; TCDL=6.0psf; BCDL=6.0psf; h=25ft; Cat. II; Exp C; Enclosed; MWFRS (envelope) gable end zone; cantilever left and right exposed ; end vertical left and right exposed; Lumber DOL=1.60 plate grip DOL=1.60
3) This truss has been designed for a 10.0 psf bottom chord live load nonconcurrent with any other live loads.
4) * This truss has been designed for a live load of 20.0psf on the bottom chord in all areas where a rectangle 3-6-0 tall by 2-0-0 wide will fit between the bottom chord and any other members.
5) Provide mechanical connection (by others) of truss to bearing plate capable of withstanding 100 lb uplift at joint(s) 6 except (jt=lb) 3=133.
6) This truss is designed in accordance with the 2018 International Residential Code sections R502.11.1 and R802.10.2 and referenced standard ANSI/TPI 1.

March 5,2021

MiTek
16023 Swingley Ridge Rd
Chesterfield, MO 63017

Job	Truss	Truss Type	Qty	Ply	Lot 64 W2
210319	B1	Monopitch Supported Gable	1	1	I45078945 Job Reference (optional)

Wheeler Lumber, Waverly, KS - 66871, 8.430 s Feb 12 2021 MiTek Industries, Inc. Fri Mar 5 13:50:07 2021 Page 1
ID:pq50?Ycap6WpLXoTu4wfY2za1nE-?D?j_lhhxjCHpMfqbxZr2XQoWNou4BTUa5RwEKzdyME

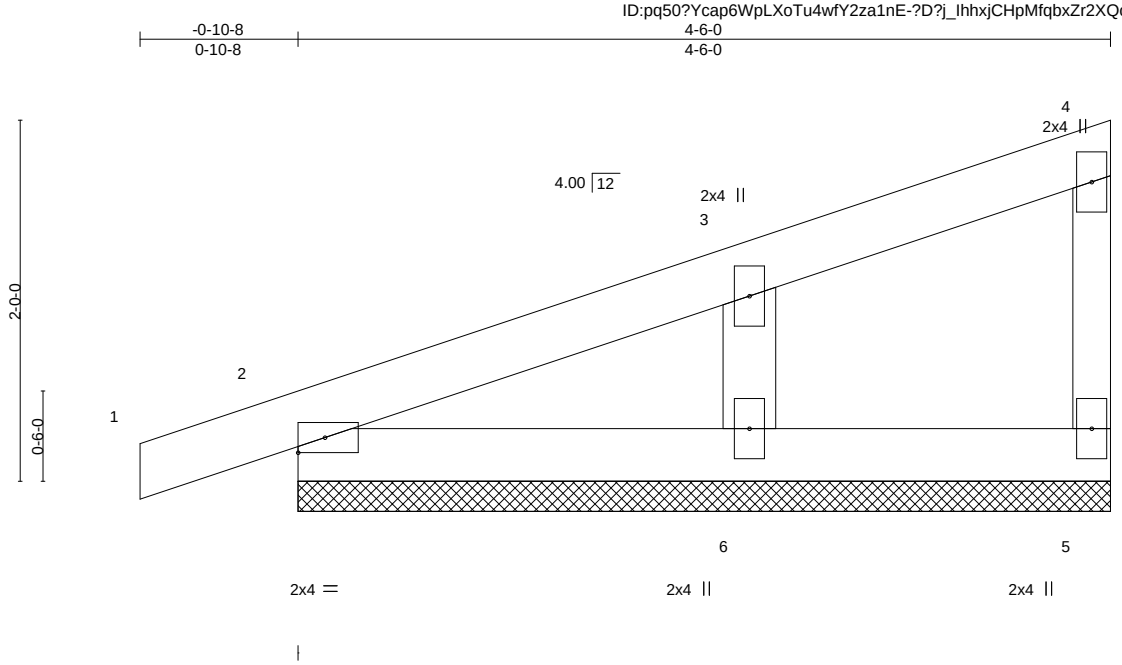

LOADING (psf)		SPACING-	2-0-0	CSI.		DEFL.	in	(loc)	l/defl	L/d	PLATES	GRIP
TCLL	25.0	Plate Grip DOL	1.15	TC	0.07	Vert(LL)	0.00	1	n/r	120	MT20	197/144
TCDL	10.0	Lumber DOL	1.15	BC	0.04	Vert(CT)	0.00	1	n/r	120		
BCLL	0.0 *	Rep Stress Incr	YES	WB	0.02	Horz(CT)	-0.00	5	n/a	n/a		
BCDL	10.0	Code IRC2018/TPI2014		Matrix-P							Weight: 14 lb	FT = 10%

LUMBER-
TOP CHORD 2x4 SPF No.2
BOT CHORD 2x4 SPF No.2
WEBS 2x3 SPF No.2
OTHERS 2x4 SPF No.2

BRACING-
TOP CHORD Structural wood sheathing directly applied or 4-6-0 oc purlins, except end verticals.
BOT CHORD Rigid ceiling directly applied or 10-0-0 oc bracing.

REACTIONS. (size) 5=4-6-0, 2=4-6-0, 6=4-6-0
Max Horz 2=76(LC 5)
Max Uplift 5=-9(LC 5), 2=-49(LC 4), 6=-58(LC 8)
Max Grav 5=59(LC 1), 2=165(LC 1), 6=233(LC 1)

FORCES. (lb) - Max. Comp./Max. Ten. - All forces 250 (lb) or less except when shown.

NOTES-
1) Wind: ASCE 7-16; Vult=115mph (3-second gust) Vasd=91mph; TCDL=6.0psf; BCDL=6.0psf; h=25ft; Cat. II; Exp C; Enclosed; MWFRS (envelope) gable end zone; cantilever left and right exposed ; end vertical left and right exposed; Lumber DOL=1.60 plate grip DOL=1.60
2) Truss designed for wind loads in the plane of the truss only. For studs exposed to wind (normal to the face), see Standard Industry Gable End Details as applicable, or consult qualified building designer as per ANSI/TPI 1.
3) Gable requires continuous bottom chord bearing.
4) Gable studs spaced at 2-0-0 oc.
5) This truss has been designed for a 10.0 psf bottom chord live load nonconcurrent with any other live loads.
6) * This truss has been designed for a live load of 20.0psf on the bottom chord in all areas where a rectangle 3-6-0 tall by 2-0-0 wide will fit between the bottom chord and any other members.
7) Provide mechanical connection (by others) of truss to bearing plate capable of withstanding 100 lb uplift at joint(s) 5, 2, 6.
8) This truss is designed in accordance with the 2018 International Residential Code sections R502.11.1 and R802.10.2 and referenced standard ANSI/TPI 1.

STATE OF MISSOURI
JUAN GARCIA
NUMBER E-2000162101
PROFESSIONAL ENGINEER

JUAN GARCIA
LICENSED
16952
KANSAS
PROFESSIONAL ENGINEER

March 5,2021

MiTek
16023 Swingley Ridge Rd
Chesterfield, MO 63017

Job	Truss	Truss Type	Qty	Ply	Lot 64 W2
210319	B2	Monopitch	7	1	I45078946 Job Reference (optional)

Wheeler Lumber, Waverly, KS - 66871, 8.430 s Feb 12 2021 MiTek Industries, Inc. Fri Mar 5 13:50:09 2021 Page 1
ID:pq50?Ycap6WpLXoTu4wfY2za1nE-xc7TP_jxTKS?2goDjLbJ7yV5RBR9Y5Jn2Pw1JDzdyMC

-0-10-8 / 0-10-8 — 4-6-0 / 4-6-0

Scale = 1:12.8

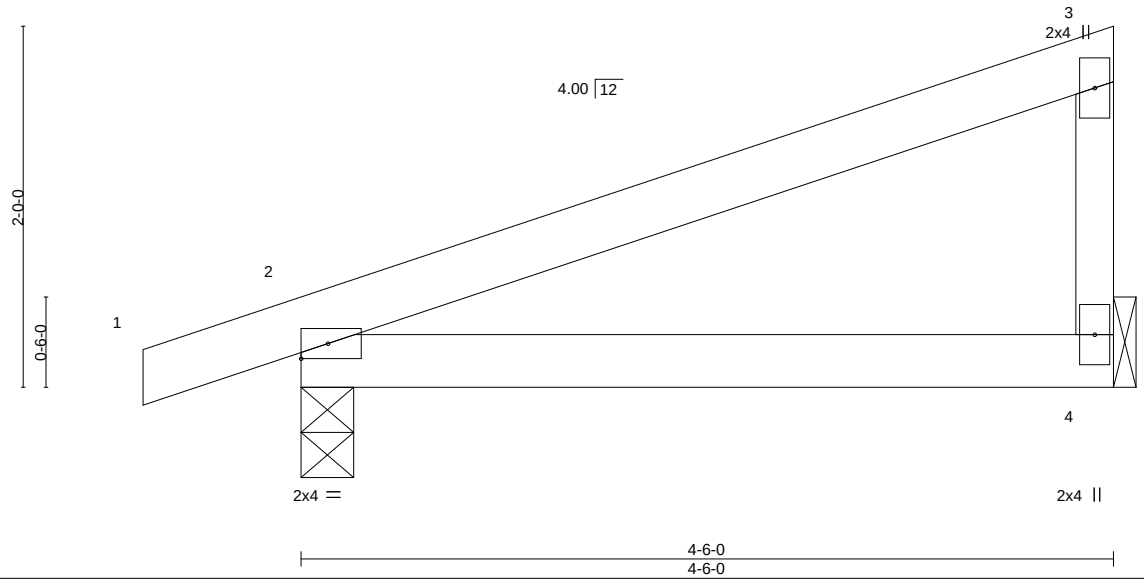

LOADING (psf)		SPACING- 2-0-0		CSI.		DEFL.	in	(loc)	l/defl	L/d	PLATES	GRIP
TCLL	25.0	Plate Grip DOL	1.15	TC	0.30	Vert(LL)	-0.02	2-4	>999	360	MT20	197/144
TCDL	10.0	Lumber DOL	1.15	BC	0.18	Vert(CT)	-0.04	2-4	>999	240		
BCLL	0.0 *	Rep Stress Incr	YES	WB	0.00	Horz(CT)	-0.00	4	n/a	n/a		
BCDL	10.0	Code IRC2018/TPI2014		Matrix-P		Wind(LL)	0.00	2	****	240	Weight: 13 lb	FT = 10%

LUMBER-
TOP CHORD 2x4 SPF No.2
BOT CHORD 2x4 SPF No.2
WEBS 2x3 SPF No.2

BRACING-
TOP CHORD Structural wood sheathing directly applied or 4-6-0 oc purlins, except end verticals.
BOT CHORD Rigid ceiling directly applied or 10-0-0 oc bracing.

REACTIONS. (size) 4=Mechanical, 2=0-3-8
Max Horz 2=76(LC 5)
Max Uplift 4=-40(LC 8), 2=-78(LC 4)
Max Grav 4=183(LC 1), 2=271(LC 1)

FORCES. (lb) - Max. Comp./Max. Ten. - All forces 250 (lb) or less except when shown.

NOTES-
1) Wind: ASCE 7-16; Vult=115mph (3-second gust) Vasd=91mph; TCDL=6.0psf; BCDL=6.0psf; h=25ft; Cat. II; Exp C; Enclosed; MWFRS (envelope) gable end zone; cantilever left and right exposed ; end vertical left and right exposed; Lumber DOL=1.60 plate grip DOL=1.60
2) This truss has been designed for a 10.0 psf bottom chord live load nonconcurrent with any other live loads.
3) * This truss has been designed for a live load of 20.0psf on the bottom chord in all areas where a rectangle 3-6-0 tall by 2-0-0 wide will fit between the bottom chord and any other members.
4) Refer to girder(s) for truss to truss connections.
5) Provide mechanical connection (by others) of truss to bearing plate capable of withstanding 100 lb uplift at joint(s) 4, 2.
6) This truss is designed in accordance with the 2018 International Residential Code sections R502.11.1 and R802.10.2 and referenced standard ANSI/TPI 1.

STATE OF MISSOURI
JUAN GARCIA
NUMBER E-2000162101
PROFESSIONAL ENGINEER

JUAN GARCIA
LICENSED
16952
KANSAS
PROFESSIONAL ENGINEER

March 5,2021

MiTek
16023 Swingley Ridge Rd
Chesterfield, MO 63017

Job	Truss	Truss Type	Qty	Ply	Lot 64 W2
210319	B3	Monopitch	7	1	I45078947 Job Reference (optional)

Wheeler Lumber, Waverly, KS - 66871, 8.430 s Feb 12 2021 MiTek Industries, Inc. Fri Mar 5 13:50:09 2021 Page 1
ID:pq50?Ycap6WpLXoTu4wfY2za1nE-xc7TP_jxTKS?2goDjLbJ7yV7JBSAY3on2Pw1JDzdyMC

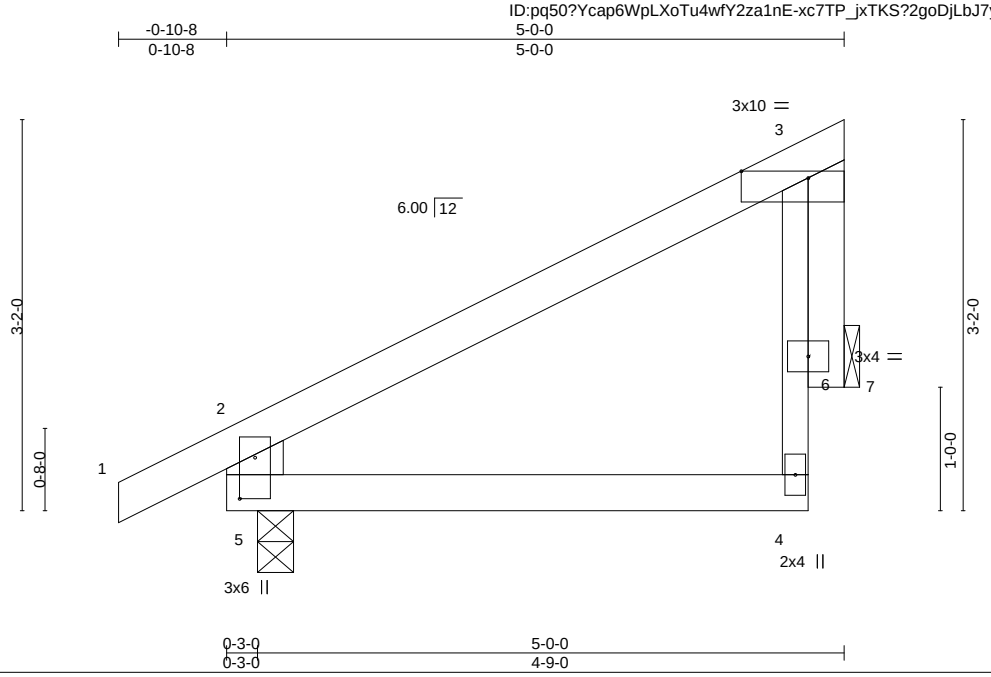

Plate Offsets (X,Y)-- [3:0-6-8,Edge], [5:0-4-0,0-1-8]

LOADING (psf)		SPACING- 2-0-0		CSI.		DEFL. in (loc) l/defl L/d		PLATES GRIP
TCLL	25.0	Plate Grip DOL	1.15	TC	0.18	Vert(LL) -0.01 4-5 >999 360		MT20 197/144
TCDL	10.0	Lumber DOL	1.15	BC	0.12	Vert(CT) -0.02 4-5 >999 240		
BCLL	0.0 *	Rep Stress Incr	YES	WB	0.16	Horz(CT) -0.00 7 n/a n/a		
BCDL	10.0	Code IRC2018/TPI2014		Matrix-R		Wind(LL) 0.01 4-5 >999 240		Weight: 18 lb FT = 10%

LUMBER-

TOP CHORD	2x4 SPF No.2
BOT CHORD	2x4 SPF No.2
WEBS	2x3 SPF No.2 *Except* 2-5: 2x6 SPF No.2
OTHERS	2x4 SPF No.2

BRACING-

TOP CHORD	Structural wood sheathing directly applied or 5-0-0 oc purlins, except end verticals.
BOT CHORD	Rigid ceiling directly applied or 10-0-0 oc bracing.

REACTIONS. (size) 5=0-3-8, 7=Mechanical
Max Horz 5=90(LC 5)
Max Uplift 5=-39(LC 8), 7=-60(LC 8)
Max Grav 5=297(LC 1), 7=174(LC 1)

FORCES. (lb) - Max. Comp./Max. Ten. - All forces 250 (lb) or less except when shown.
TOP CHORD 2-5=-265/80

NOTES-

1) Wind: ASCE 7-16; Vult=115mph (3-second gust) Vasd=91mph; TCDL=6.0psf; BCDL=6.0psf; h=25ft; Cat. II; Exp C; Enclosed; MWFRS (envelope) gable end zone; cantilever left and right exposed ; end vertical left and right exposed; Lumber DOL=1.60 plate grip DOL=1.60
2) This truss has been designed for a 10.0 psf bottom chord live load nonconcurrent with any other live loads.
3) * This truss has been designed for a live load of 20.0psf on the bottom chord in all areas where a rectangle 3-6-0 tall by 2-0-0 wide will fit between the bottom chord and any other members.
4) Refer to girder(s) for truss to truss connections.
5) Provide mechanical connection (by others) of truss to bearing plate capable of withstanding 100 lb uplift at joint(s) 5, 7.
6) This truss is designed in accordance with the 2018 International Residential Code sections R502.11.1 and R802.10.2 and referenced standard ANSI/TPI 1.

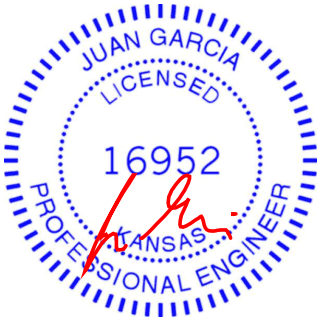

March 5,2021

MiTek
16023 Swingley Ridge Rd
Chesterfield, MO 63017

Job	Truss	Truss Type	Qty	Ply	Lot 64 W2
210319	B4	Monopitch	1	1	I45078948 Job Reference (optional)

Wheeler Lumber, Waverly, KS - 66871, 8.430 s Feb 12 2021 MiTek Industries, Inc. Fri Mar 5 13:50:10 2021 Page 1
ID:pq50?Ycap6WpLXoTu4wfY2za1nE-PogrcKkZEeasgqNPG36Yg92JAboDHXKwG3farfzdyMB

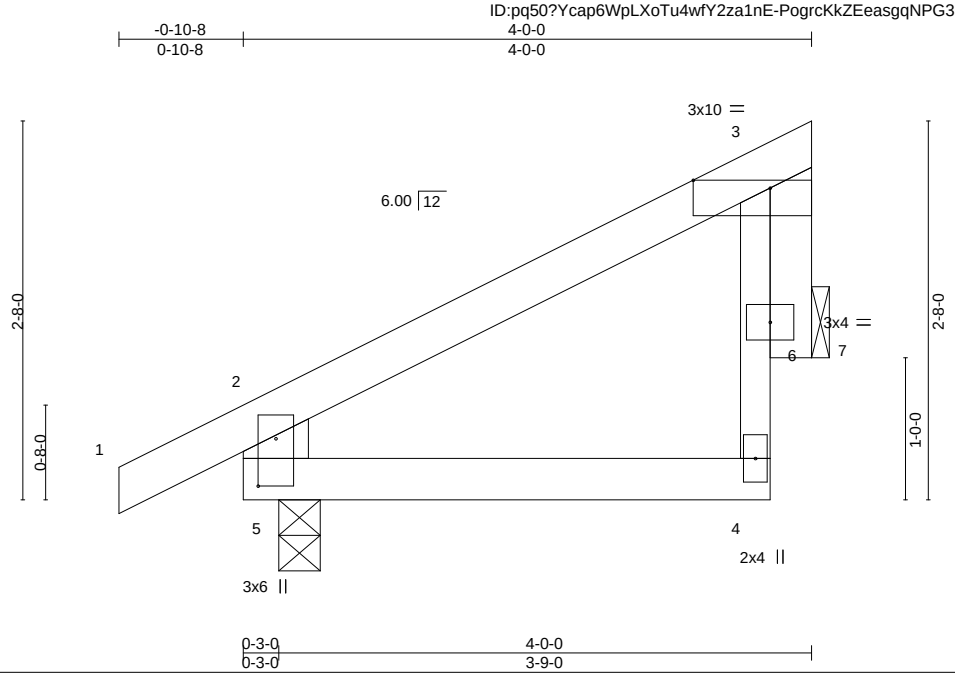

Plate Offsets (X,Y)-- [3:0-6-8,Edge], [5:0-4-0,0-1-8]

LOADING (psf)		SPACING- 2-0-0		CSI.		DEFL. in (loc) l/defl L/d		PLATES GRIP
TCLL	25.0	Plate Grip DOL	1.15	TC	0.11	Vert(LL) -0.00 4-5 >999 360		MT20 197/144
TCDL	10.0	Lumber DOL	1.15	BC	0.07	Vert(CT) -0.01 4-5 >999 240		
BCLL	0.0 *	Rep Stress Incr	YES	WB	0.08	Horz(CT) 0.00 7 n/a n/a		
BCDL	10.0	Code IRC2018/TPI2014		Matrix-R		Wind(LL) 0.00 4-5 >999 240		Weight: 14 lb FT = 10%

LUMBER-

TOP CHORD	2x4 SPF No.2
BOT CHORD	2x4 SPF No.2
WEBS	2x3 SPF No.2 *Except* 2-5: 2x6 SPF No.2
OTHERS	2x4 SPF No.2

BRACING-

TOP CHORD	Structural wood sheathing directly applied or 4-0-0 oc purlins, except end verticals.
BOT CHORD	Rigid ceiling directly applied or 10-0-0 oc bracing.

REACTIONS. (size) 5=0-3-8, 7=Mechanical
Max Horz 5=77(LC 5)
Max Uplift 5=-37(LC 8), 7=-45(LC 8)
Max Grav 5=254(LC 1), 7=127(LC 1)

FORCES. (lb) - Max. Comp./Max. Ten. - All forces 250 (lb) or less except when shown.

NOTES-

1) Wind: ASCE 7-16; Vult=115mph (3-second gust) Vasd=91mph; TCDL=6.0psf; BCDL=6.0psf; h=25ft; Cat. II; Exp C; Enclosed; MWFRS (envelope) gable end zone; cantilever left and right exposed ; end vertical left and right exposed; Lumber DOL=1.60 plate grip DOL=1.60
2) This truss has been designed for a 10.0 psf bottom chord live load nonconcurrent with any other live loads.
3) * This truss has been designed for a live load of 20.0psf on the bottom chord in all areas where a rectangle 3-6-0 tall by 2-0-0 wide will fit between the bottom chord and any other members.
4) Refer to girder(s) for truss to truss connections.
5) Provide mechanical connection (by others) of truss to bearing plate capable of withstanding 100 lb uplift at joint(s) 5, 7.
6) This truss is designed in accordance with the 2018 International Residential Code sections R502.11.1 and R802.10.2 and referenced standard ANSI/TPI 1.

March 5,2021

MiTek
16023 Swingley Ridge Rd
Chesterfield, MO 63017

Job	Truss	Truss Type	Qty	Ply	Lot 64 W2
210319	B5	Roof Special Girder	1	1	I45078949 Job Reference (optional)

Wheeler Lumber, Waverly, KS - 66871, 8.430 s Feb 12 2021 MiTek Industries, Inc. Fri Mar 5 13:50:11 2021 Page 1
ID:pq50?Ycap6WpLXoTu4wfY2za1nE-t_EDqfkB?yijH_ybqmdnDNaRd_7t0zk3VjP8N5zdyMA

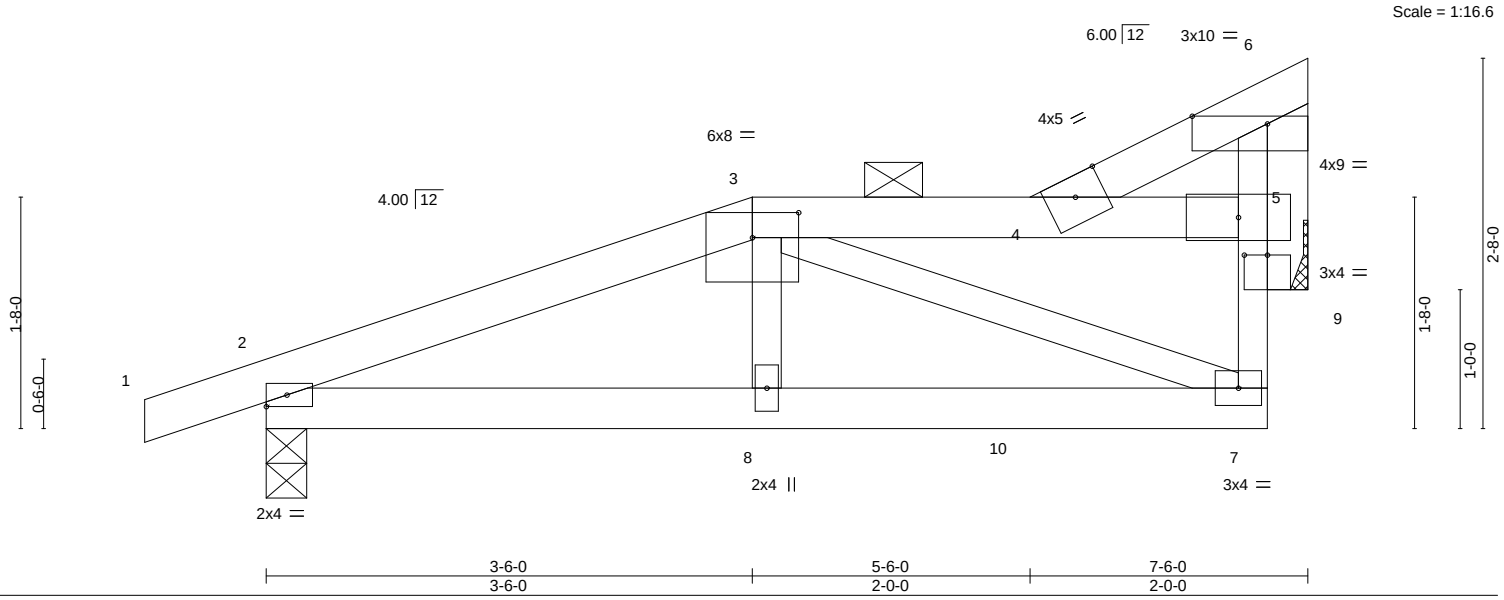

Plate Offsets (X,Y)-- [3:0-4-0,0-2-3], [6:0-6-8,Edge], [9:0-2-0,0-0-0]

LOADING (psf)		SPACING- 2-0-0		CSI.		DEFL. in (loc) l/defl L/d		PLATES GRIP
TCLL	25.0	Plate Grip DOL	1.15	TC	0.26	Vert(LL) -0.01 8 >999 360		MT20 197/144
TCDL	10.0	Lumber DOL	1.15	BC	0.17	Vert(CT) -0.02 2-8 >999 240		
BCLL	0.0 *	Rep Stress Incr	NO	WB	0.13	Horz(CT) 0.01 9 n/a n/a		
BCDL	10.0	Code IRC2018/TPI2014		Matrix-S		Wind(LL) 0.01 8 >999 240		Weight: 27 lb FT = 10%

LUMBER-
TOP CHORD 2x4 SPF No.2
BOT CHORD 2x4 SPF No.2
WEBS 2x3 SPF No.2
OTHERS 2x4 SPF No.2

BRACING-
TOP CHORD Structural wood sheathing directly applied or 6-0-0 oc purlins, except end verticals, and 2-0-0 oc purlins (6-0-0 max.): 3-5.
BOT CHORD Rigid ceiling directly applied or 10-0-0 oc bracing.

REACTIONS. (size) 2=0-3-8, 9=Mechanical
Max Horz 2=98(LC 24)
Max Uplift 2=-114(LC 4), 9=-99(LC 8)
Max Grav 2=388(LC 1), 9=364(LC 1)

FORCES. (lb) - Max. Comp./Max. Ten. - All forces 250 (lb) or less except when shown.
TOP CHORD 2-3=-490/106
BOT CHORD 2-8=-133/412, 7-8=-129/417
WEBS 3-7=-358/109

NOTES-
1) Wind: ASCE 7-16; Vult=115mph (3-second gust) Vasd=91mph; TCDL=6.0psf; BCDL=6.0psf; h=25ft; Cat. II; Exp C; Enclosed; MWFRS (envelope) gable end zone; cantilever left and right exposed ; end vertical left and right exposed; Lumber DOL=1.60 plate grip DOL=1.60
2) Provide adequate drainage to prevent water ponding.
3) This truss has been designed for a 10.0 psf bottom chord live load nonconcurrent with any other live loads.
4) * This truss has been designed for a live load of 20.0psf on the bottom chord in all areas where a rectangle 3-6-0 tall by 2-0-0 wide will fit between the bottom chord and any other members.
5) Refer to girder(s) for truss to truss connections.
6) Provide mechanical connection (by others) of truss to bearing plate capable of withstanding 100 lb uplift at joint(s) 9 except (jt=lb) 2=114.
7) This truss is designed in accordance with the 2018 International Residential Code sections R502.11.1 and R802.10.2 and referenced standard ANSI/TPI 1.
8) Graphical purlin representation does not depict the size or the orientation of the purlin along the top and/or bottom chord.
9) Hanger(s) or other connection device(s) shall be provided sufficient to support concentrated load(s) 141 lb down and 115 lb up at 3-6-0, and 59 lb down and 43 lb up at 5-6-7, and 42 lb down and 45 lb up at 7-2-8 on top chord, and 15 lb down and 5 lb up at 3-6-0, and 9 lb down at 5-4-8, and 22 lb down at 7-1-4 on bottom chord. The design/selection of such connection device(s) is the responsibility of others.
10) In the LOAD CASE(S) section, loads applied to the face of the truss are noted as front (F) or back (B).

LOAD CASE(S) Standard
1) Dead + Roof Live (balanced): Lumber Increase=1.15, Plate Increase=1.15
Uniform Loads (plf)
Vert: 1-3=-70, 3-4=-70, 4-6=-70, 2-7=-20

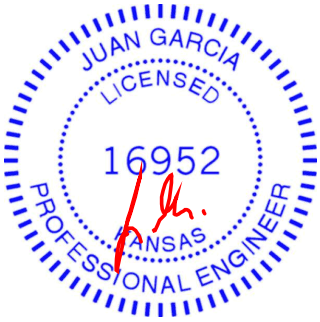

March 5,2021

Continued on page 2

MiTek
16023 Swingley Ridge Rd
Chesterfield, MO 63017

LOAD CASE(S) Standard
Concentrated Loads (lb)
Vert: 5=-33(B) 7=-15(B) 8=5(B) 10=-3(B)

Job	Truss	Truss Type	Qty	Ply	Lot 64 W2
210319	B6	Roof Special	1	1	I45078950 Job Reference (optional)

Wheeler Lumber, Waverly, KS - 66871, 8.430 s Feb 12 2021 MiTek Industries, Inc. Fri Mar 5 13:50:11 2021 Page 1
ID:pq50?Ycap6WpLXoTu4wfY2za1nE-t_EDqfkB?yijH_ybqmdnDNaKE_1?0?13VjP8N5zdyMA

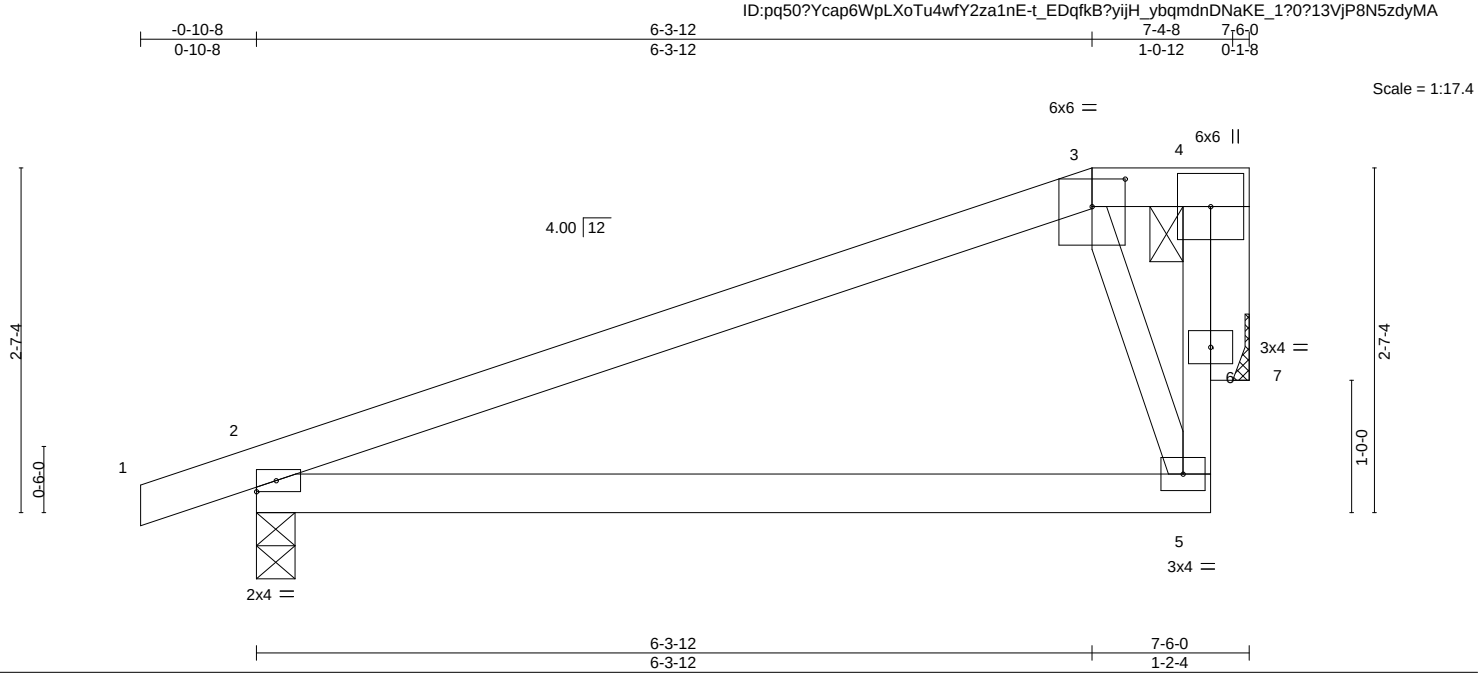

Plate Offsets (X,Y)-- [3:0-3-0,0-2-8]

LOADING (psf)		SPACING- 2-0-0		CSI.		DEFL. in (loc) l/defl L/d		PLATES GRIP
TCLL	25.0	Plate Grip DOL	1.15	TC	0.73	Vert(LL) -0.14 2-5 >620 360		MT20 197/144
TCDL	10.0	Lumber DOL	1.15	BC	0.54	Vert(CT) -0.28 2-5 >310 240		
BCLL	0.0 *	Rep Stress Incr	YES	WB	0.05	Horz(CT) 0.01 7 n/a n/a		
BCDL	10.0	Code IRC2018/TPI2014		Matrix-P		Wind(LL) 0.00 5 >999 240		Weight: 23 lb FT = 10%

LUMBER-
TOP CHORD 2x4 SPF No.2
BOT CHORD 2x4 SPF No.2
WEBS 2x3 SPF No.2
OTHERS 2x4 SPF No.2

BRACING-
TOP CHORD Structural wood sheathing directly applied or 6-0-0 oc purlins, except end verticals, and 2-0-0 oc purlins (6-0-0 max.): 3-4.
BOT CHORD Rigid ceiling directly applied or 10-0-0 oc bracing.

REACTIONS. (size) 2=0-3-8, 7=Mechanical
Max Horz 2=81(LC 4)
Max Uplift 2=-94(LC 4), 7=-67(LC 4)
Max Grav 2=404(LC 1), 7=294(LC 1)

FORCES. (lb) - Max. Comp./Max. Ten. - All forces 250 (lb) or less except when shown.
TOP CHORD 5-6=-52/285, 4-6=-52/285
WEBS 4-7=-301/69

NOTES-
1) Wind: ASCE 7-16; Vult=115mph (3-second gust) Vasd=91mph; TCDL=6.0psf; BCDL=6.0psf; h=25ft; Cat. II; Exp C; Enclosed; MWFRS (envelope) gable end zone; cantilever left and right exposed ; end vertical left and right exposed; Lumber DOL=1.60 plate grip DOL=1.60
2) Provide adequate drainage to prevent water ponding.
3) This truss has been designed for a 10.0 psf bottom chord live load nonconcurrent with any other live loads.
4) * This truss has been designed for a live load of 20.0psf on the bottom chord in all areas where a rectangle 3-6-0 tall by 2-0-0 wide will fit between the bottom chord and any other members.
5) Refer to girder(s) for truss to truss connections.
6) Provide mechanical connection (by others) of truss to bearing plate capable of withstanding 100 lb uplift at joint(s) 2, 7.
7) This truss is designed in accordance with the 2018 International Residential Code sections R502.11.1 and R802.10.2 and referenced standard ANSI/TPI 1.
8) Graphical purlin representation does not depict the size or the orientation of the purlin along the top and/or bottom chord.

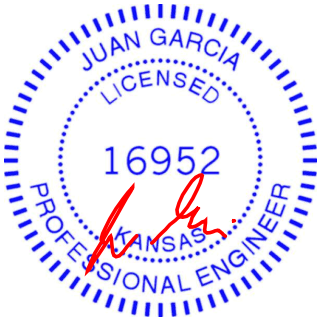

March 5,2021

MiTek
16023 Swingley Ridge Rd
Chesterfield, MO 63017

Job	Truss	Truss Type	Qty	Ply	Lot 64 W2
210319	B7	Monopitch	2	1	I45078951 Job Reference (optional)

Wheeler Lumber, Waverly, KS - 66871, 8.430 s Feb 12 2021 MiTek Industries, Inc. Fri Mar 5 13:50:12 2021 Page 1
ID:pq50?Ycap6WpLXoTu4wfY2za1nE-LBoc1?lpmFrav8XoOU80la7YZOQDlNXDkN8hwYzdyM9

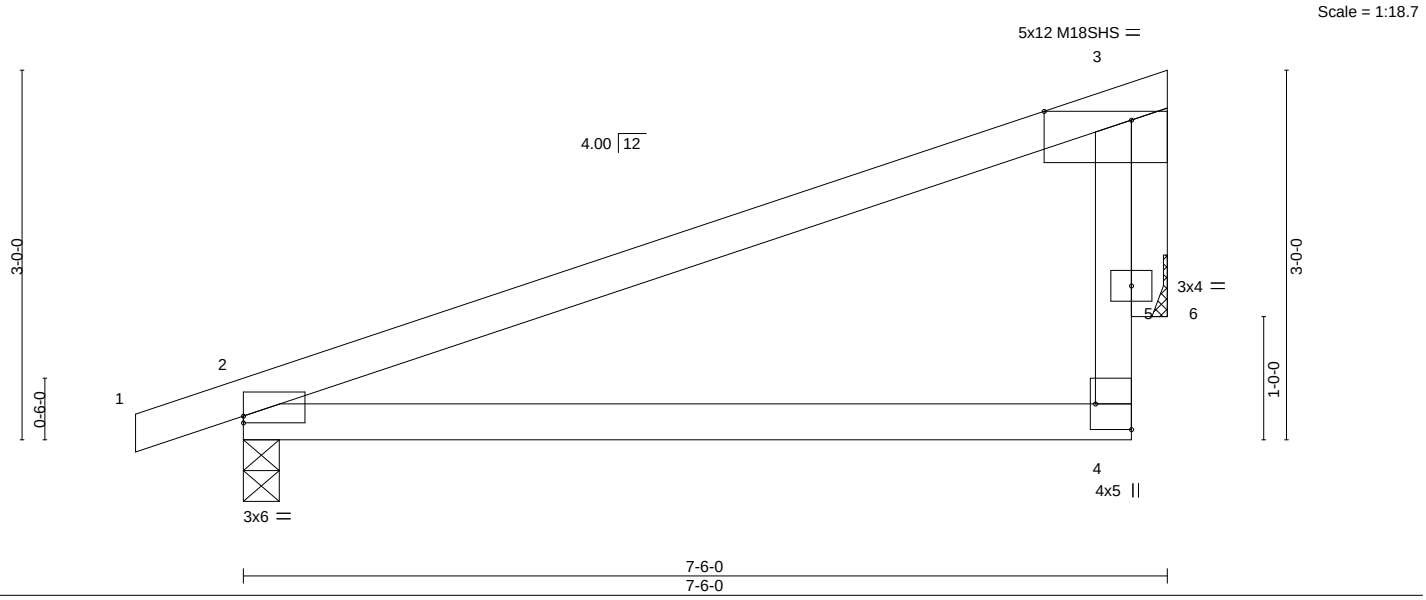

Plate Offsets (X,Y)-- [2:0-0-0,0-0-10], [3:0-8-8,Edge], [4:Edge,0-3-8]

LOADING (psf)			SPACING-	2-0-0	CSI.		DEFL.	in	(loc)	l/defl	L/d	PLATES	GRIP
TCLL	25.0		Plate Grip DOL	1.15	TC	0.56	Vert(LL)	-0.05	2-4	>999	360	MT20	197/144
TCDL	10.0		Lumber DOL	1.15	BC	0.35	Vert(CT)	-0.12	2-4	>726	240	M18SHS	197/144
BCLL	0.0	*	Rep Stress Incr	YES	WB	0.35	Horz(CT)	-0.01	6	n/a	n/a		
BCDL	10.0		Code IRC2018/TPI2014		Matrix-R		Wind(LL)	0.04	2-4	>999	240	Weight: 23 lb	FT = 10%

LUMBER-
TOP CHORD 2x4 SPF No.2
BOT CHORD 2x4 SPF No.2
WEBS 2x4 SPF No.2
OTHERS 2x4 SPF No.2

BRACING-
TOP CHORD Structural wood sheathing directly applied or 6-0-0 oc purlins, except end verticals.
BOT CHORD Rigid ceiling directly applied or 10-0-0 oc bracing.

REACTIONS. (size) 2=0-3-8, 6=Mechanical
Max Horz 2=91(LC 4)
Max Uplift 2=-90(LC 4), 6=-71(LC 8)
Max Grav 2=404(LC 1), 6=290(LC 1)

FORCES. (lb) - Max. Comp./Max. Ten. - All forces 250 (lb) or less except when shown.
TOP CHORD 2-3=-315/23, 3-5=-285/223

NOTES-
1) Wind: ASCE 7-16; Vult=115mph (3-second gust) Vasd=91mph; TCDL=6.0psf; BCDL=6.0psf; h=25ft; Cat. II; Exp C; Enclosed; MWFRS (envelope) gable end zone; cantilever left and right exposed ; end vertical left and right exposed; Lumber DOL=1.60 plate grip DOL=1.60
2) All plates are MT20 plates unless otherwise indicated.
3) This truss has been designed for a 10.0 psf bottom chord live load nonconcurrent with any other live loads.
4) * This truss has been designed for a live load of 20.0psf on the bottom chord in all areas where a rectangle 3-6-0 tall by 2-0-0 wide will fit between the bottom chord and any other members.
5) Refer to girder(s) for truss to truss connections.
6) Provide mechanical connection (by others) of truss to bearing plate capable of withstanding 100 lb uplift at joint(s) 2, 6.
7) This truss is designed in accordance with the 2018 International Residential Code sections R502.11.1 and R802.10.2 and referenced standard ANSI/TPI 1.

March 5,2021

MiTek
16023 Swingley Ridge Rd
Chesterfield, MO 63017

Job	Truss	Truss Type	Qty	Ply	Lot 64 W2
210319	B8	Monopitch	8	1	I45078952 Job Reference (optional)

Wheeler Lumber, Waverly, KS - 66871, 8.430 s Feb 12 2021 MiTek Industries, Inc. Fri Mar 5 13:50:13 2021 Page 1
ID:pq50?Ycap6WpLXoTu4wfY2za1nE-pNM_FLmSXZzRXH6_yBgFloglwoo_UsPMy1uES_zdyM8

-0-10-8 / 0-10-8 — 6-6-0 / 6-6-0

Scale = 1:17.0

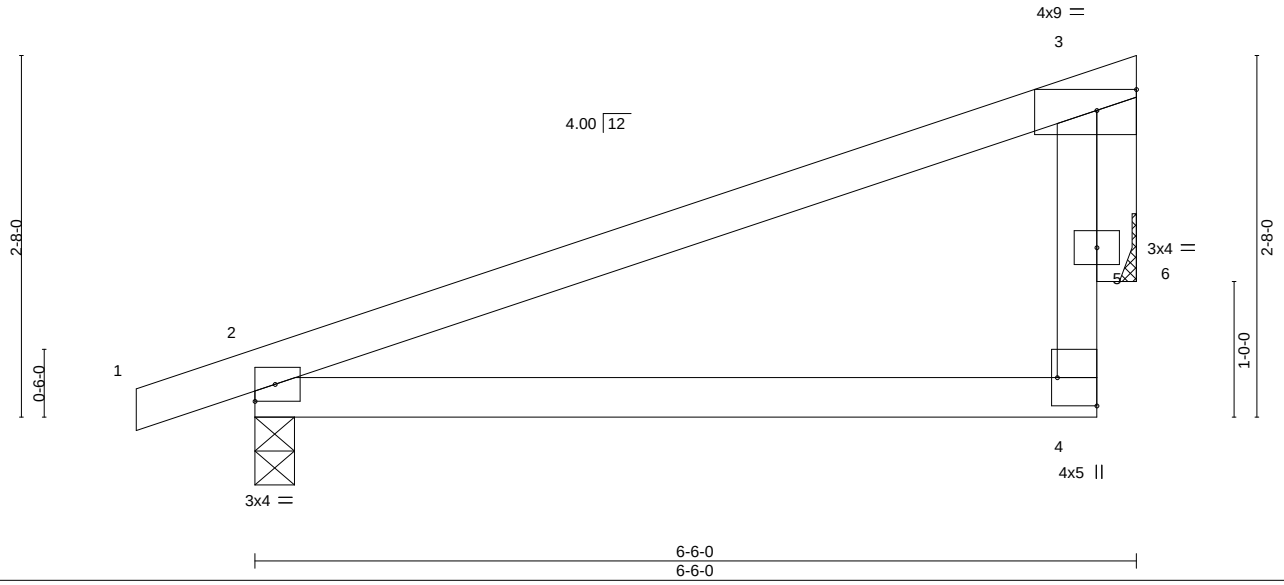

Plate Offsets (X,Y)-- [3:Edge,0-1-14], [4:Edge,0-3-8]

LOADING (psf)			SPACING- 2-0-0		CSI.		DEFL.	in	(loc)	l/defl	L/d	PLATES	GRIP
TCLL	25.0		Plate Grip DOL	1.15	TC	0.40	Vert(LL)	-0.03	2-4	>999	360	MT20	197/144
TCDL	10.0		Lumber DOL	1.15	BC	0.25	Vert(CT)	-0.06	2-4	>999	240		
BCLL	0.0	*	Rep Stress Incr	YES	WB	0.25	Horz(CT)	-0.00	6	n/a	n/a		
BCDL	10.0		Code IRC2018/TPI2014		Matrix-R		Wind(LL)	0.02	2-4	>999	240	Weight: 20 lb	FT = 10%

LUMBER-
TOP CHORD 2x4 SPF No.2
BOT CHORD 2x4 SPF No.2
WEBS 2x4 SPF No.2
OTHERS 2x4 SPF No.2

BRACING-
TOP CHORD Structural wood sheathing directly applied or 6-0-0 oc purlins, except end verticals.
BOT CHORD Rigid ceiling directly applied or 10-0-0 oc bracing.

REACTIONS. (size) 2=0-3-8, 6=Mechanical
Max Horz 2=78(LC 5)
Max Uplift 2=-85(LC 4), 6=-60(LC 8)
Max Grav 2=359(LC 1), 6=245(LC 1)

FORCES. (lb) - Max. Comp./Max. Ten. - All forces 250 (lb) or less except when shown.
TOP CHORD 2-3=-271/20

NOTES-
1) Wind: ASCE 7-16; Vult=115mph (3-second gust) Vasd=91mph; TCDL=6.0psf; BCDL=6.0psf; h=25ft; Cat. II; Exp C; Enclosed; MWFRS (envelope) gable end zone; cantilever left and right exposed ; end vertical left and right exposed; Lumber DOL=1.60 plate grip DOL=1.60
2) This truss has been designed for a 10.0 psf bottom chord live load nonconcurrent with any other live loads.
3) * This truss has been designed for a live load of 20.0psf on the bottom chord in all areas where a rectangle 3-6-0 tall by 2-0-0 wide will fit between the bottom chord and any other members.
4) Refer to girder(s) for truss to truss connections.
5) Provide mechanical connection (by others) of truss to bearing plate capable of withstanding 100 lb uplift at joint(s) 2, 6.
6) This truss is designed in accordance with the 2018 International Residential Code sections R502.11.1 and R802.10.2 and referenced standard ANSI/TPI 1.

STATE OF MISSOURI
JUAN GARCIA
NUMBER E-2000162101
PROFESSIONAL ENGINEER

JUAN GARCIA
LICENSED
16952
KANSAS
PROFESSIONAL ENGINEER

March 5,2021

MiTek
16023 Swingley Ridge Rd
Chesterfield, MO 63017

Job	Truss	Truss Type	Qty	Ply	Lot 64 W2
210319	B9	Roof Special Girder	1	1	I45078953 Job Reference (optional)

Wheeler Lumber, Waverly, KS - 66871, 8.430 s Feb 12 2021 MiTek Industries, Inc. Fri Mar 5 13:50:14 2021 Page 1
ID:pq50?Ycap6WpLXoTu4wfY2za1nE-IZwMShn4Ht5I8RhAVvBUq?CzWC9yDLWWBhdo_QzdyM7

-0-10-8	3-6-0	5-6-0	6-6-0
0-10-8	3-6-0	2-0-0	1-0-0

Scale = 1:14.7

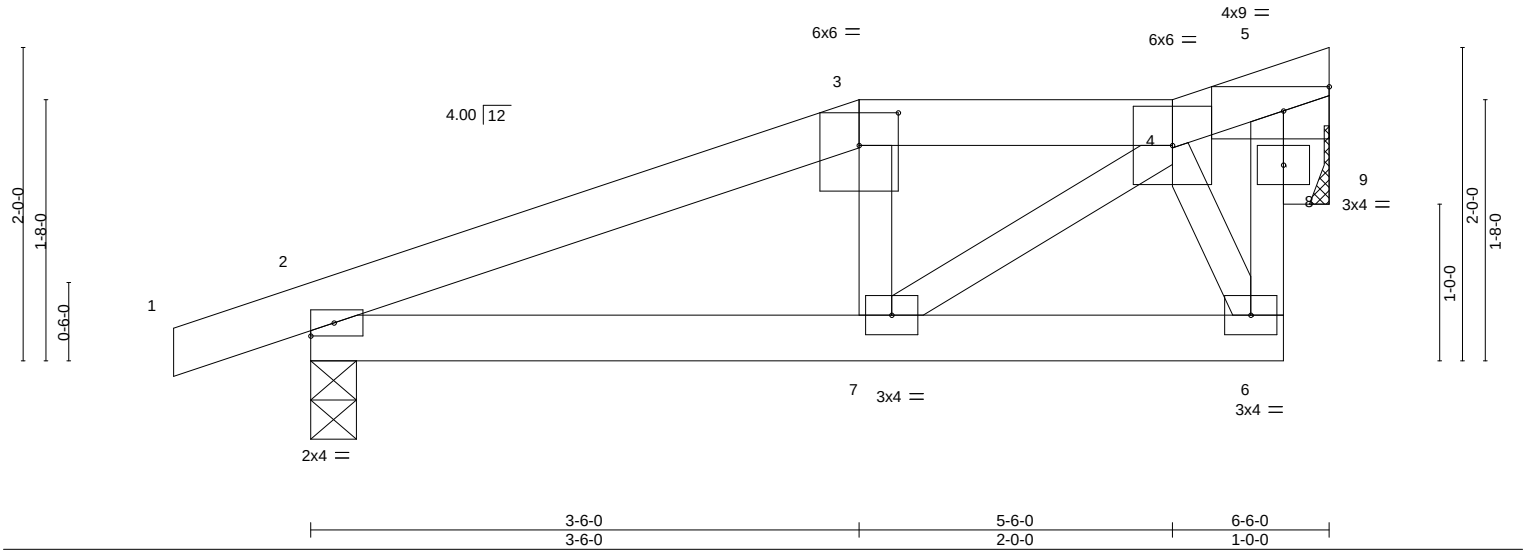

Plate Offsets (X,Y)-- [3:0-3-0,0-2-8], [5:Edge,0-1-14]

LOADING (psf)		SPACING- 2-0-0		CSI.		DEFL.	in	(loc)	l/defl	L/d	PLATES	GRIP
TCLL	25.0	Plate Grip DOL	1.15	TC	0.21	Vert(LL)	-0.01	2-7	>999	360	MT20	197/144
TCDL	10.0	Lumber DOL	1.15	BC	0.14	Vert(CT)	-0.01	2-7	>999	240		
BCLL	0.0 *	Rep Stress Incr	NO	WB	0.07	Horz(CT)	0.00	9	n/a	n/a		
BCDL	10.0	Code IRC2018/TPI2014		Matrix-P		Wind(LL)	0.00	7	>999	240	Weight: 21 lb	FT = 10%

LUMBER-
TOP CHORD 2x4 SPF No.2
BOT CHORD 2x4 SPF No.2
WEBS 2x3 SPF No.2
OTHERS 2x4 SPF No.2

BRACING-
TOP CHORD Structural wood sheathing directly applied or 6-0-0 oc purlins, except end verticals, and 2-0-0 oc purlins (6-0-0 max.): 3-4.
BOT CHORD Rigid ceiling directly applied or 10-0-0 oc bracing.

REACTIONS. (size) 2=0-3-8, 9=Mechanical
Max Horz 2=60(LC 5)
Max Uplift 2=-101(LC 4), 9=-62(LC 8)
Max Grav 2=357(LC 1), 9=246(LC 1)

FORCES. (lb) - Max. Comp./Max. Ten. - All forces 250 (lb) or less except when shown.
TOP CHORD 2-3=-384/62, 3-4=-307/73, 6-8=-62/280, 5-8=-62/280
BOT CHORD 2-7=-71/311
WEBS 4-6=-284/77, 5-9=-265/69

NOTES-
1) Wind: ASCE 7-16; Vult=115mph (3-second gust) Vasd=91mph; TCDL=6.0psf; BCDL=6.0psf; h=25ft; Cat. II; Exp C; Enclosed; MWFRS (envelope) gable end zone; cantilever left and right exposed ; end vertical left and right exposed; Lumber DOL=1.60 plate grip DOL=1.60
2) Provide adequate drainage to prevent water ponding.
3) This truss has been designed for a 10.0 psf bottom chord live load nonconcurrent with any other live loads.
4) * This truss has been designed for a live load of 20.0psf on the bottom chord in all areas where a rectangle 3-6-0 tall by 2-0-0 wide will fit between the bottom chord and any other members.
5) Refer to girder(s) for truss to truss connections.
6) Provide mechanical connection (by others) of truss to bearing plate capable of withstanding 100 lb uplift at joint(s) 9 except (jt=lb) 2=101.
7) This truss is designed in accordance with the 2018 International Residential Code sections R502.11.1 and R802.10.2 and referenced standard ANSI/TPI 1.
8) Graphical purlin representation does not depict the size or the orientation of the purlin along the top and/or bottom chord.
9) Hanger(s) or other connection device(s) shall be provided sufficient to support concentrated load(s) 86 lb down and 78 lb up at 3-6-0 on top chord, and 7 lb down and 5 lb up at 3-6-0 on bottom chord. The design/selection of such connection device(s) is the responsibility of others.
10) In the LOAD CASE(S) section, loads applied to the face of the truss are noted as front (F) or back (B).

LOAD CASE(S) Standard
1) Dead + Roof Live (balanced): Lumber Increase=1.15, Plate Increase=1.15
Uniform Loads (plf)
Vert: 1-3=-70, 3-4=-70, 4-5=-70, 2-6=-20

STATE OF MISSOURI
JUAN GARCIA
NUMBER E-2000162101
PROFESSIONAL ENGINEER

JUAN GARCIA
LICENSED
16952
KANSAS
PROFESSIONAL ENGINEER

March 5,2021

Continued on page 2

MiTek
16023 Swingley Ridge Rd
Chesterfield, MO 63017

LOAD CASE(S) Standard
Concentrated Loads (lb)
Vert: 7=5(F)

Job	Truss	Truss Type	Qty	Ply	Lot 64 W2
210319	B10	Monopitch	1	1	I45078954 Job Reference (optional)

Wheeler Lumber, Waverly, KS - 66871, 8.430 s Feb 12 2021 MiTek Industries, Inc. Fri Mar 5 13:50:07 2021 Page 1
ID:pq50?Ycap6WpLXoTu4wfY2za1nE-?D?j_IhhxjCHpMfqbxZr2XQmFNmV49eUa5RwEKzdyME

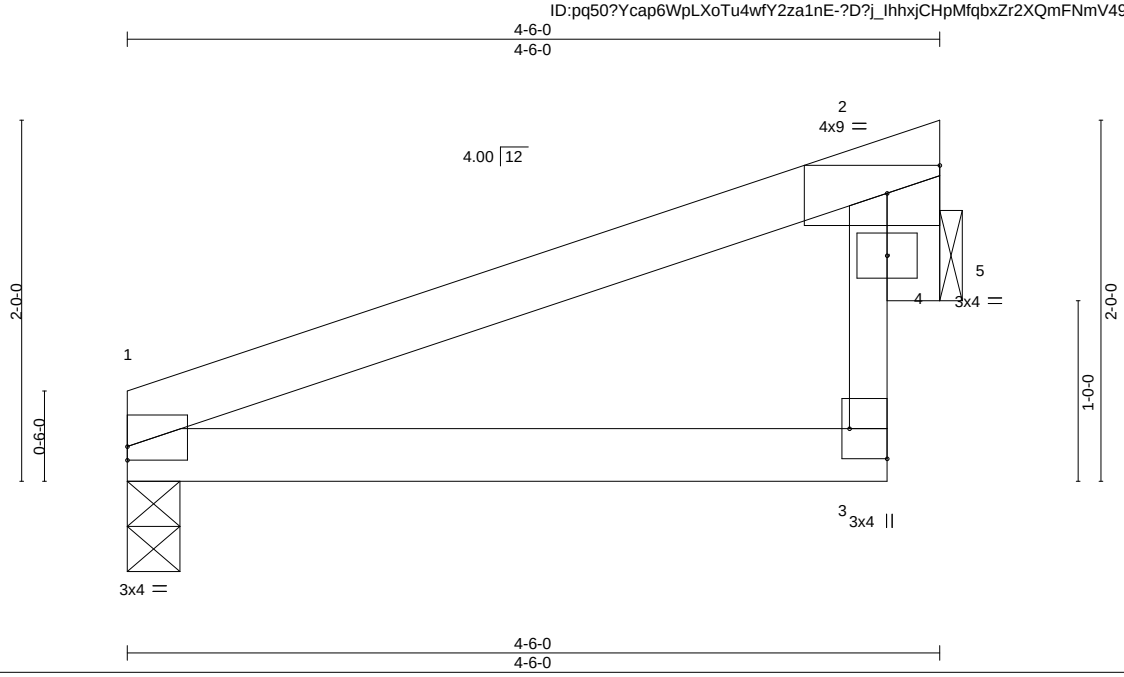

Plate Offsets (X,Y)-- [1:0-0-0,0-0-14], [2:Edge,0-1-14], [3:Edge,0-2-8]

LOADING (psf)		SPACING- 2-0-0		CSI.		DEFL. in (loc) l/defl L/d		PLATES GRIP
TCLL	25.0	Plate Grip DOL	1.15	TC	0.22	Vert(LL) -0.01 1-3 >999 360		MT20 197/144
TCDL	10.0	Lumber DOL	1.15	BC	0.13	Vert(CT) -0.02 1-3 >999 240		
BCLL	0.0 *	Rep Stress Incr	YES	WB	0.14	Horz(CT) 0.00 5 n/a n/a		
BCDL	10.0	Code IRC2018/TPI2014		Matrix-R		Wind(LL) 0.00 1-3 >999 240		Weight: 12 lb FT = 10%

LUMBER-

TOP CHORD	2x4 SPF No.2
BOT CHORD	2x4 SPF No.2
WEBS	2x3 SPF No.2
OTHERS	2x4 SPF No.2

BRACING-

TOP CHORD	Structural wood sheathing directly applied or 4-6-0 oc purlins, except end verticals.
BOT CHORD	Rigid ceiling directly applied or 10-0-0 oc bracing.

REACTIONS. (size) 1=0-3-8, 5=Mechanical
Max Horz 1=58(LC 5)
Max Uplift 1=-26(LC 4), 5=-41(LC 8)
Max Grav 1=192(LC 1), 5=164(LC 1)

FORCES. (lb) - Max. Comp./Max. Ten. - All forces 250 (lb) or less except when shown.

NOTES-

1) Wind: ASCE 7-16; Vult=115mph (3-second gust) Vasd=91mph; TCDL=6.0psf; BCDL=6.0psf; h=25ft; Cat. II; Exp C; Enclosed; MWFRS (envelope) gable end zone; cantilever left and right exposed ; end vertical left and right exposed; Lumber DOL=1.60 plate grip DOL=1.60
2) This truss has been designed for a 10.0 psf bottom chord live load nonconcurrent with any other live loads.
3) * This truss has been designed for a live load of 20.0psf on the bottom chord in all areas where a rectangle 3-6-0 tall by 2-0-0 wide will fit between the bottom chord and any other members.
4) Refer to girder(s) for truss to truss connections.
5) Provide mechanical connection (by others) of truss to bearing plate capable of withstanding 100 lb uplift at joint(s) 1, 5.
6) This truss is designed in accordance with the 2018 International Residential Code sections R502.11.1 and R802.10.2 and referenced standard ANSI/TPI 1.

March 5,2021

MiTek
16023 Swingley Ridge Rd
Chesterfield, MO 63017

Job	Truss	Truss Type	Qty	Ply	Lot 64 W2
210319	B11	Monopitch	1	1	I45078955 Job Reference (optional)

Wheeler Lumber, Waverly, KS - 66871, 8.430 s Feb 12 2021 MiTek Industries, Inc. Fri Mar 5 13:50:08 2021 Page 1
ID:pq50?Ycap6WpLXoTu4wfY2za1nE-TPZ5CeiJi1K8QWD09e44bkyxBn74pd4dplATmmzdyMD

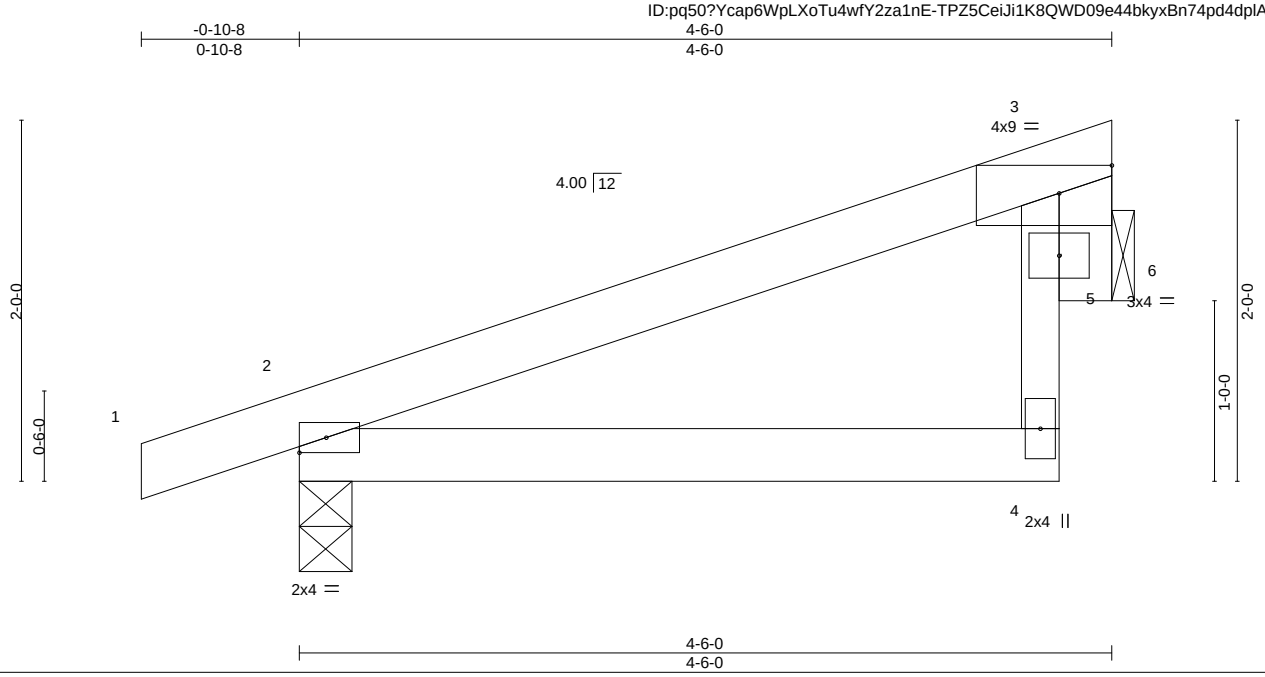

Plate Offsets (X,Y)-- [3:Edge,0-1-14]

LOADING (psf)		SPACING- 2-0-0		CSI.		DEFL. in (loc) l/defl L/d		PLATES GRIP
TCLL	25.0	Plate Grip DOL	1.15	TC	0.20	Vert(LL) -0.01 2-4 >999 360		MT20 197/144
TCDL	10.0	Lumber DOL	1.15	BC	0.11	Vert(CT) -0.01 2-4 >999 240		
BCLL	0.0 *	Rep Stress Incr	YES	WB	0.13	Horz(CT) 0.00 6 n/a n/a		
BCDL	10.0	Code IRC2018/TPI2014		Matrix-R		Wind(LL) 0.00 2-4 >999 240		Weight: 13 lb FT = 10%

LUMBER-

TOP CHORD	2x4 SPF No.2
BOT CHORD	2x4 SPF No.2
WEBS	2x3 SPF No.2
OTHERS	2x4 SPF No.2

BRACING-

TOP CHORD	Structural wood sheathing directly applied or 4-6-0 oc purlins, except end verticals.
BOT CHORD	Rigid ceiling directly applied or 10-0-0 oc bracing.

REACTIONS. (size) 2=0-3-8, 6=Mechanical
Max Horz 2=60(LC 5)
Max Uplift 2=-74(LC 4), 6=-38(LC 8)
Max Grav 2=272(LC 1), 6=156(LC 1)

FORCES. (lb) - Max. Comp./Max. Ten. - All forces 250 (lb) or less except when shown.

NOTES-

1) Wind: ASCE 7-16; Vult=115mph (3-second gust) Vasd=91mph; TCDL=6.0psf; BCDL=6.0psf; h=25ft; Cat. II; Exp C; Enclosed; MWFRS (envelope) gable end zone; cantilever left and right exposed ; end vertical left and right exposed; Lumber DOL=1.60 plate grip DOL=1.60
2) This truss has been designed for a 10.0 psf bottom chord live load nonconcurrent with any other live loads.
3) * This truss has been designed for a live load of 20.0psf on the bottom chord in all areas where a rectangle 3-6-0 tall by 2-0-0 wide will fit between the bottom chord and any other members.
4) Refer to girder(s) for truss to truss connections.
5) Provide mechanical connection (by others) of truss to bearing plate capable of withstanding 100 lb uplift at joint(s) 2, 6.
6) This truss is designed in accordance with the 2018 International Residential Code sections R502.11.1 and R802.10.2 and referenced standard ANSI/TPI 1.

March 5,2021

MiTek
16023 Swingley Ridge Rd
Chesterfield, MO 63017

Job	Truss	Truss Type	Qty	Ply	Lot 64 W2
210319	B12	Monopitch Supported Gable	1	1	I45078956 Job Reference (optional)

Wheeler Lumber, Waverly, KS - 66871, 8.430 s Feb 12 2021 MiTek Industries, Inc. Fri Mar 5 13:50:08 2021 Page 1
ID:pq50?Ycap6WpLXoTu4wfY2za1nE-TPZ5CeiJi1K8QWD09e44bkyzMn8ApeldplATmmzdyMD

-0-10-8 6-6-0
0-10-8 6-6-0

Scale = 1:17.0

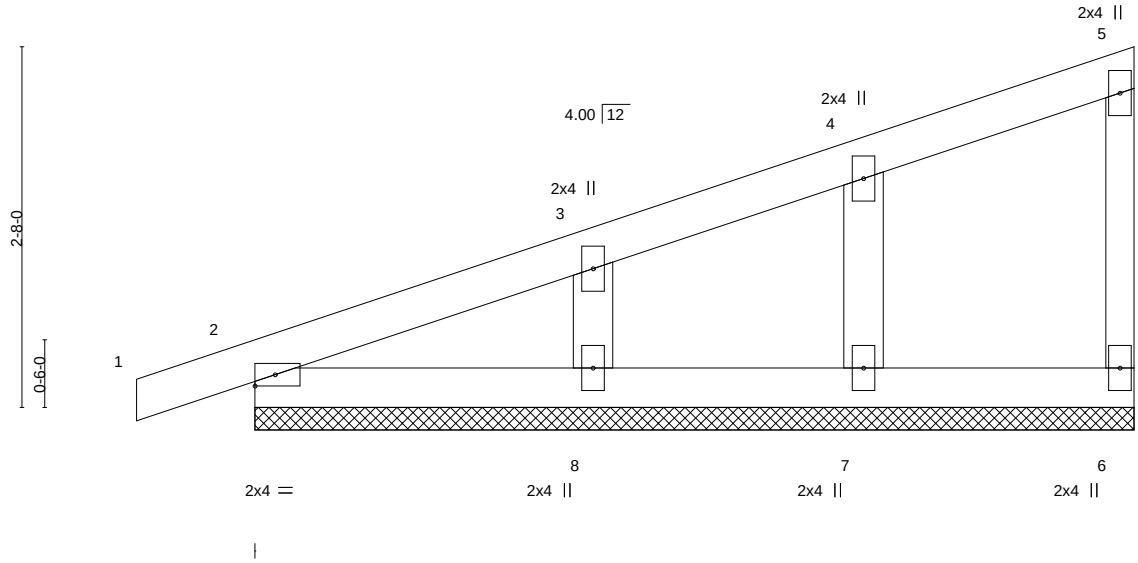

LOADING (psf)		SPACING-	2-0-0	CSI.		DEFL.	in	(loc)	l/defl	L/d	PLATES	GRIP
TCLL	25.0	Plate Grip DOL	1.15	TC	0.07	Vert(LL)	0.00	1	n/r	120	MT20	197/144
TCDL	10.0	Lumber DOL	1.15	BC	0.04	Vert(CT)	0.00	1	n/r	120		
BCLL	0.0 *	Rep Stress Incr	YES	WB	0.02	Horz(CT)	-0.00	6	n/a	n/a		
BCDL	10.0	Code IRC2018/TPI2014		Matrix-P							Weight: 21 lb	FT = 10%

LUMBER-
TOP CHORD 2x4 SPF No.2
BOT CHORD 2x4 SPF No.2
WEBS 2x3 SPF No.2
OTHERS 2x4 SPF No.2

BRACING-
TOP CHORD Structural wood sheathing directly applied or 6-0-0 oc purlins, except end verticals.
BOT CHORD Rigid ceiling directly applied or 10-0-0 oc bracing.

REACTIONS. All bearings 6-6-0.
(lb) - Max Horz 2=106(LC 5)
Max Uplift All uplift 100 lb or less at joint(s) 6, 2, 7, 8
Max Grav All reactions 250 lb or less at joint(s) 6, 2, 7, 8

FORCES. (lb) - Max. Comp./Max. Ten. - All forces 250 (lb) or less except when shown.

NOTES-
1) Wind: ASCE 7-16; Vult=115mph (3-second gust) Vasd=91mph; TCDL=6.0psf; BCDL=6.0psf; h=25ft; Cat. II; Exp C; Enclosed; MWFRS (envelope) gable end zone; cantilever left and right exposed ; end vertical left and right exposed; Lumber DOL=1.60 plate grip DOL=1.60
2) Truss designed for wind loads in the plane of the truss only. For studs exposed to wind (normal to the face), see Standard Industry Gable End Details as applicable, or consult qualified building designer as per ANSI/TPI 1.
3) Gable requires continuous bottom chord bearing.
4) Gable studs spaced at 2-0-0 oc.
5) This truss has been designed for a 10.0 psf bottom chord live load nonconcurrent with any other live loads.
6) * This truss has been designed for a live load of 20.0psf on the bottom chord in all areas where a rectangle 3-6-0 tall by 2-0-0 wide will fit between the bottom chord and any other members.
7) Provide mechanical connection (by others) of truss to bearing plate capable of withstanding 100 lb uplift at joint(s) 6, 2, 7, 8.
8) This truss is designed in accordance with the 2018 International Residential Code sections R502.11.1 and R802.10.2 and referenced standard ANSI/TPI 1.

STATE OF MISSOURI
JUAN GARCIA
NUMBER E-2000162101
PROFESSIONAL ENGINEER

JUAN GARCIA
LICENSED
16952
KANSAS
PROFESSIONAL ENGINEER

March 5,2021

MiTek
16023 Swingley Ridge Rd
Chesterfield, MO 63017

Job	Truss	Truss Type	Qty	Ply	Lot 64 W2
210319	C1	Common Supported Gable	1	1	I45078957 Job Reference (optional)

Wheeler Lumber, Waverly, KS - 66871, 8.430 s Feb 12 2021 MiTek Industries, Inc. Fri Mar 5 13:50:17 2021 Page 1
ID:pq50?Ycap6WpLXoTu4wfY2za1nE-i8cV4jpyaoTs?vPlA1kBSeqWwPCCQhrytfsSblzdyM4

-0-10-8 14-6-0 29-0-0 29-10-8
0-10-8 14-6-0 14-6-0 0-10-8

Scale = 1:53.4

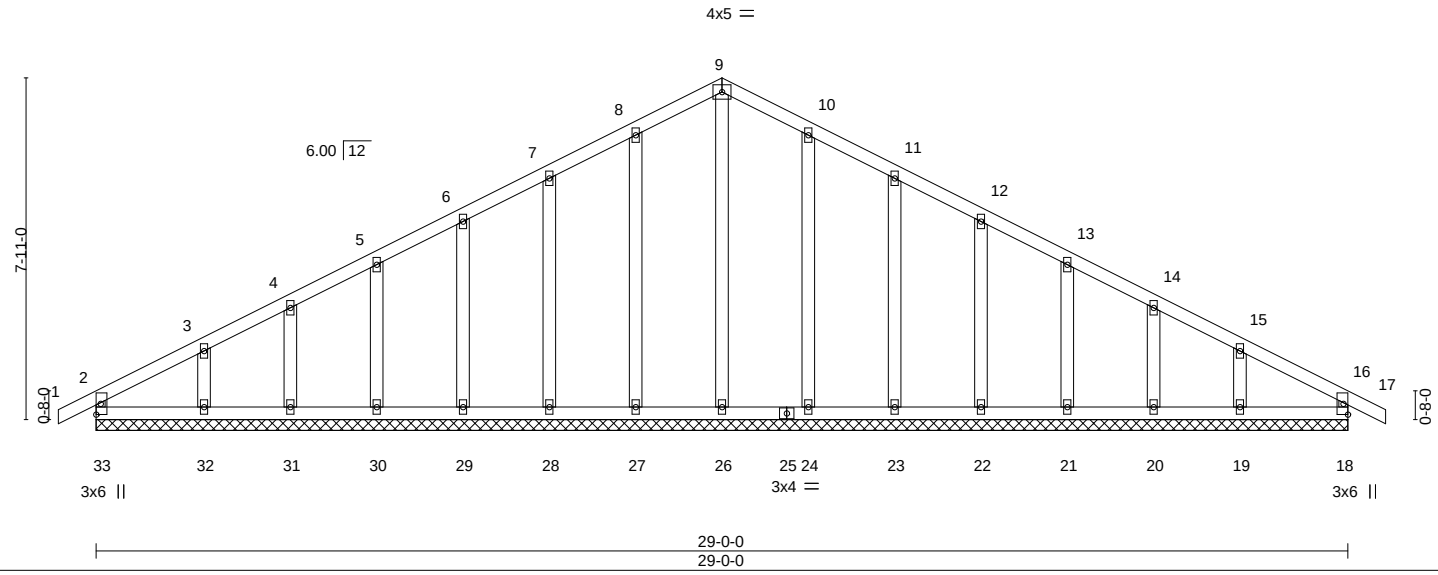

LOADING (psf)		SPACING-	2-0-0	CSI.		DEFL.	in	(loc)	l/defl	L/d	PLATES	GRIP
TCLL	25.0	Plate Grip DOL	1.15	TC	0.08	Vert(LL)	-0.00	16	n/r	120	MT20	197/144
TCDL	10.0	Lumber DOL	1.15	BC	0.04	Vert(CT)	-0.00	17	n/r	120		
BCLL	0.0 *	Rep Stress Incr	YES	WB	0.16	Horz(CT)	0.00	18	n/a	n/a		
BCDL	10.0	Code IRC2018/TPI2014		Matrix-R							Weight: 134 lb	FT = 10%

LUMBER-
TOP CHORD 2x4 SPF No.2
BOT CHORD 2x4 SPF No.2
WEBS 2x3 SPF No.2
OTHERS 2x4 SPF No.2

BRACING-
TOP CHORD Structural wood sheathing directly applied or 6-0-0 oc purlins, except end verticals.
BOT CHORD Rigid ceiling directly applied or 10-0-0 oc bracing.

REACTIONS. All bearings 29-0-0.
(lb) - Max Horz 33=122(LC 8)
Max Uplift All uplift 100 lb or less at joint(s) 33, 18, 27, 28, 29, 30, 31, 32, 24, 23, 22, 21, 20, 19
Max Grav All reactions 250 lb or less at joint(s) 33, 18, 26, 27, 28, 29, 30, 31, 32, 24, 23, 22, 21, 20, 19

FORCES. (lb) - Max. Comp./Max. Ten. - All forces 250 (lb) or less except when shown.

NOTES-
1) Unbalanced roof live loads have been considered for this design.
2) Wind: ASCE 7-16; Vult=115mph (3-second gust) Vasd=91mph; TCDL=6.0psf; BCDL=6.0psf; h=25ft; Cat. II; Exp C; Enclosed; MWFRS (envelope) gable end zone; cantilever left and right exposed ; end vertical left and right exposed; Lumber DOL=1.60 plate grip DOL=1.60
3) Truss designed for wind loads in the plane of the truss only. For studs exposed to wind (normal to the face), see Standard Industry Gable End Details as applicable, or consult qualified building designer as per ANSI/TPI 1.
4) All plates are 2x4 MT20 unless otherwise indicated.
5) Gable requires continuous bottom chord bearing.
6) Truss to be fully sheathed from one face or securely braced against lateral movement (i.e. diagonal web).
7) Gable studs spaced at 2-0-0 oc.
8) This truss has been designed for a 10.0 psf bottom chord live load nonconcurrent with any other live loads.
9) * This truss has been designed for a live load of 20.0psf on the bottom chord in all areas where a rectangle 3-6-0 tall by 2-0-0 wide will fit between the bottom chord and any other members.
10) Provide mechanical connection (by others) of truss to bearing plate capable of withstanding 100 lb uplift at joint(s) 33, 18, 27, 28, 29, 30, 31, 32, 24, 23, 22, 21, 20, 19.
11) This truss is designed in accordance with the 2018 International Residential Code sections R502.11.1 and R802.10.2 and referenced standard ANSI/TPI 1.

March 5,2021

MiTek
16023 Swingley Ridge Rd
Chesterfield, MO 63017

Job	Truss	Truss Type	Qty	Ply	Lot 64 W2
210319	C2	Common	6	1	I45078958 Job Reference (optional)

Wheeler Lumber, Waverly, KS - 66871, 8.430 s Feb 12 2021 MiTek Industries, Inc. Fri Mar 5 13:50:19 2021 Page 1
ID:pq50?Ycap6WpLXoTu4wfY2za1nE-eXjFVOrD6PjaFCZ8ISnfX3whpDihuPZFLyLZfezdyM2

-0-10-8	7-9-9	14-6-0	21-2-7	29-0-0	29-10-8
0-10-8	7-9-9	6-8-7	6-8-7	7-9-9	0-10-8

Scale = 1:54.2

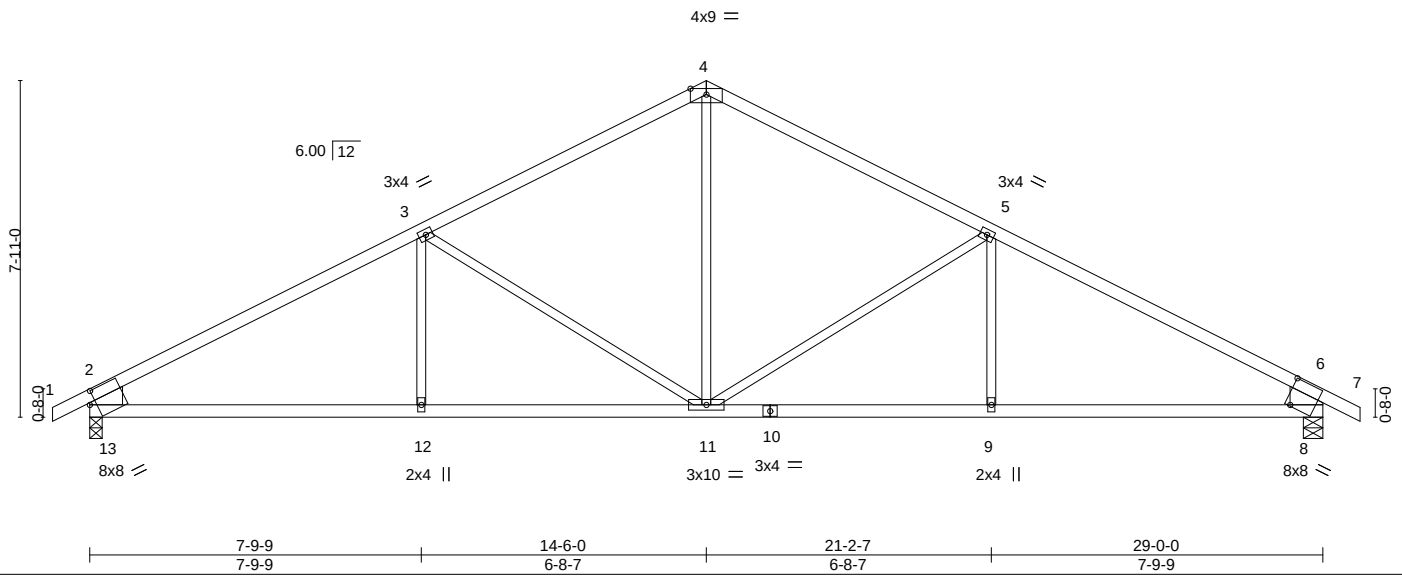

Plate Offsets (X,Y)-- [8:0-1-8,0-7-10], [13:0-1-13,0-3-8]

LOADING (psf)		SPACING- 2-0-0		CSI.		DEFL.	in	(loc)	l/defl	L/d	PLATES	GRIP
TCLL	25.0	Plate Grip DOL	1.15	TC	0.82	Vert(LL)	-0.18	9-11	>999	360	MT20	197/144
TCDL	10.0	Lumber DOL	1.15	BC	0.81	Vert(CT)	-0.35	9-11	>975	240		
BCLL	0.0 *	Rep Stress Incr	YES	WB	0.91	Horz(CT)	0.08	8	n/a	n/a		
BCDL	10.0	Code IRC2018/TPI2014		Matrix-S		Wind(LL)	0.10	9-11	>999	240	Weight: 101 lb	FT = 10%

LUMBER-
TOP CHORD 2x4 SPF 2100F 1.8E
BOT CHORD 2x4 SPF No.2
WEBS 2x3 SPF No.2 *Except*
2-13,6-8: 2x10 SP DSS

BRACING-
TOP CHORD Structural wood sheathing directly applied or 3-9-12 oc purlins, except end verticals.
BOT CHORD Rigid ceiling directly applied or 10-0-0 oc bracing.

REACTIONS. (size) 13=0-3-8, 8=0-5-8
Max Horz 13=-120(LC 6)
Max Uplift 13=-186(LC 8), 8=-186(LC 9)
Max Grav 13=1359(LC 1), 8=1359(LC 1)

FORCES. (lb) - Max. Comp./Max. Ten. - All forces 250 (lb) or less except when shown.
TOP CHORD 2-3=-2002/246, 3-4=-1456/229, 4-5=-1456/229, 5-6=-2002/246, 2-13=-1252/230, 6-8=-1252/230
BOT CHORD 12-13=-232/1657, 11-12=-232/1657, 9-11=-116/1657, 8-9=-116/1657
WEBS 4-11=-63/735, 5-11=-586/227, 5-9=0/261, 3-11=-586/227, 3-12=0/261

NOTES-
1) Unbalanced roof live loads have been considered for this design.
2) Wind: ASCE 7-16; Vult=115mph (3-second gust) Vasd=91mph; TCDL=6.0psf; BCDL=6.0psf; h=25ft; Cat. II; Exp C; Enclosed; MWFRS (envelope) gable end zone; cantilever left and right exposed ; end vertical left and right exposed; Lumber DOL=1.60 plate grip DOL=1.60
3) This truss has been designed for a 10.0 psf bottom chord live load nonconcurrent with any other live loads.
4) * This truss has been designed for a live load of 20.0psf on the bottom chord in all areas where a rectangle 3-6-0 tall by 2-0-0 wide will fit between the bottom chord and any other members.
5) Provide mechanical connection (by others) of truss to bearing plate capable of withstanding 100 lb uplift at joint(s) except (jt=lb) 13=186, 8=186.
6) This truss is designed in accordance with the 2018 International Residential Code sections R502.11.1 and R802.10.2 and referenced standard ANSI/TPI 1.

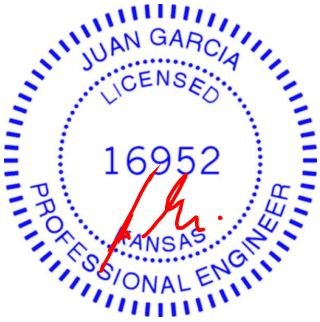

March 5,2021

MiTek
16023 Swingley Ridge Rd
Chesterfield, MO 63017

Job	Truss	Truss Type	Qty	Ply	Lot 64 W2
210319	C3	Common	6	1	I45078959 Job Reference (optional)

Wheeler Lumber, Waverly, KS - 66871, 8.430 s Feb 12 2021 MiTek Industries, Inc. Fri Mar 5 13:50:20 2021 Page 1
ID:pq50?Ycap6WpLXoTu4wfY2za1nE-6jHdjkrrtjrRsM8Ks9Iu4GSrPc1_dslOZc46C4zdyM1

-0-10-8	7-9-9	14-6-0	21-2-6	29-10-8
0-10-8	7-9-9	6-8-7	6-8-6	8-8-2

Scale = 1:54.2

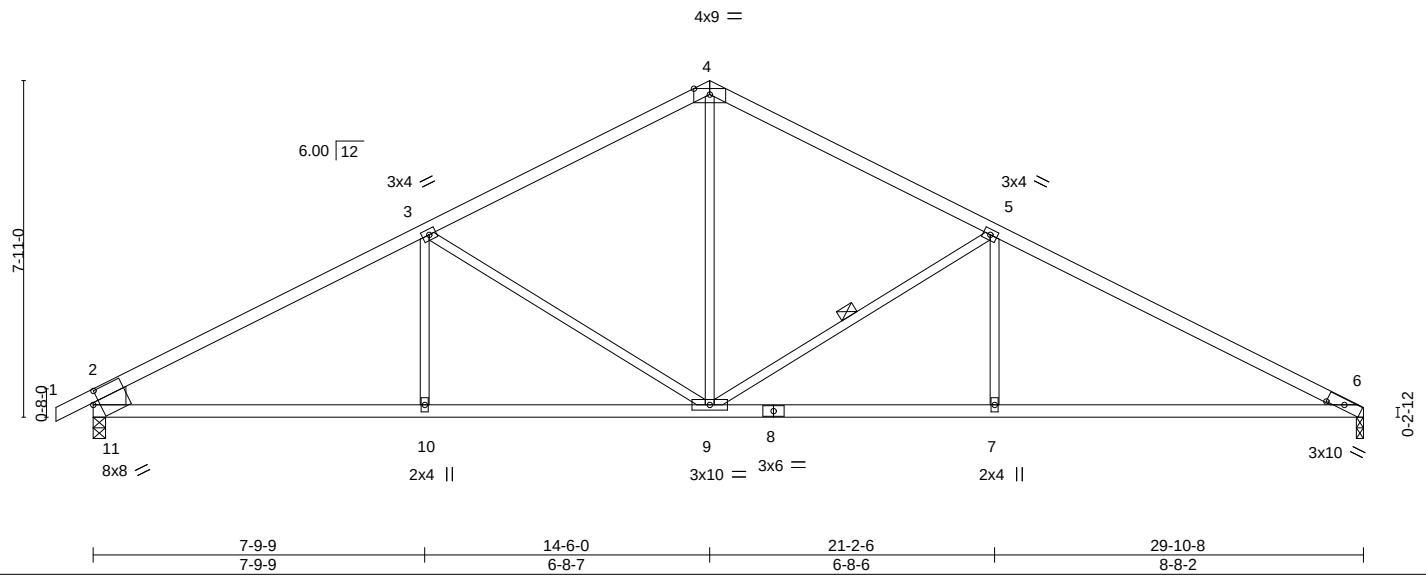

7-9-9	14-6-0	21-2-6	29-10-8
7-9-9	6-8-7	6-8-6	8-8-2

Plate Offsets (X,Y)-- [6:0-5-0,0-1-7], [11:0-1-13,0-3-8]

LOADING (psf)		SPACING- 2-0-0		CSI.		DEFL.	in	(loc)	l/defl	L/d	PLATES	GRIP
TCLL	25.0	Plate Grip DOL	1.15	TC	0.89	Vert(LL)	-0.18	6-7	>999	360	MT20	197/144
TCDL	10.0	Lumber DOL	1.15	BC	0.87	Vert(CT)	-0.42	6-7	>833	240		
BCLL	0.0 *	Rep Stress Incr	YES	WB	0.91	Horz(CT)	0.09	6	n/a	n/a		
BCDL	10.0	Code IRC2018/TPI2014		Matrix-S		Wind(LL)	0.11	6-7	>999	240	Weight: 100 lb	FT = 10%

LUMBER-
TOP CHORD 2x4 SPF 2100F 1.8E
BOT CHORD 2x4 SPF No.2
WEBS 2x3 SPF No.2 *Except*
2-11: 2x10 SP DSS

BRACING-
TOP CHORD Structural wood sheathing directly applied, except end verticals.
BOT CHORD Rigid ceiling directly applied or 10-0-0 oc bracing.
WEBS 1 Row at midpt 5-9

REACTIONS. (size) 6=0-2-0 (req. 0-2-1), 11=0-3-8
Max Horz 11=126(LC 12)
Max Uplift 6=-170(LC 9), 11=-189(LC 8)
Max Grav 6=1321(LC 1), 11=1413(LC 1)

FORCES. (lb) - Max. Comp./Max. Ten. - All forces 250 (lb) or less except when shown.
TOP CHORD 2-3=-2111/251, 3-4=-1561/244, 4-5=-1581/237, 5-6=-2348/286, 2-11=-1304/233
BOT CHORD 10-11=-246/1752, 9-10=-246/1752, 7-9=-157/2026, 6-7=-157/2026
WEBS 3-10=0/265, 3-9=-588/226, 4-9=-89/883, 5-9=-873/270, 5-7=0/348

NOTES-
1) Unbalanced roof live loads have been considered for this design.
2) Wind: ASCE 7-16; Vult=115mph (3-second gust) Vasd=91mph; TCDL=6.0psf; BCDL=6.0psf; h=25ft; Cat. II; Exp C; Enclosed; MWFRS (envelope) gable end zone; cantilever left and right exposed ; end vertical left and right exposed; Lumber DOL=1.60 plate grip DOL=1.60
3) This truss has been designed for a 10.0 psf bottom chord live load nonconcurrent with any other live loads.
4) * This truss has been designed for a live load of 20.0psf on the bottom chord in all areas where a rectangle 3-6-0 tall by 2-0-0 wide will fit between the bottom chord and any other members.
5) WARNING: Required bearing size at joint(s) 6 greater than input bearing size.
6) Provide mechanical connection (by others) of truss to bearing plate capable of withstanding 100 lb uplift at joint(s) except (jt=lb) 6=170, 11=189.
7) This truss is designed in accordance with the 2018 International Residential Code sections R502.11.1 and R802.10.2 and referenced standard ANSI/TPI 1.

March 5,2021

MiTek
16023 Swingley Ridge Rd
Chesterfield, MO 63017

Job	Truss	Truss Type	Qty	Ply	Lot 64 W2
210319	C4	Common	1	1	I45078960 Job Reference (optional)

Wheeler Lumber, Waverly, KS - 66871, 8.430 s Feb 12 2021 MiTek Industries, Inc. Fri Mar 5 13:50:21 2021 Page 1
ID:pq50?Ycap6WpLXoTu4wfY2za1nE-awr?w4sTe0zIUWjWPtp7cU?0f0MQLJ_YoGqfkWzdyM0

-0-10-8	7-9-9	14-6-0	21-2-6	29-8-14
0-10-8	7-9-9	6-8-7	6-8-6	8-6-8

Scale = 1:54.1

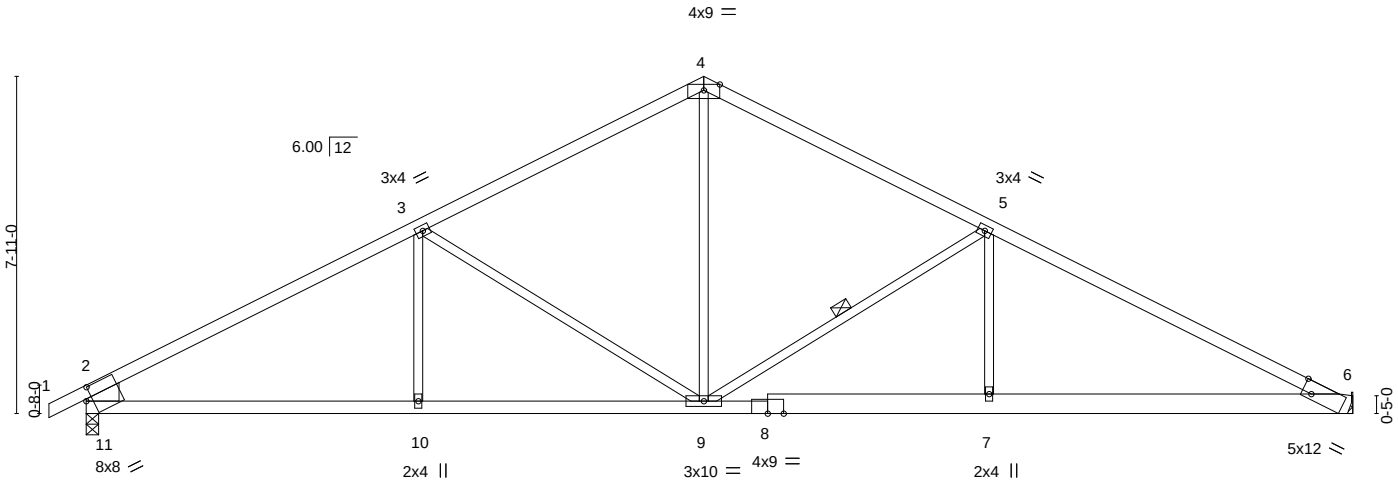

7-9-9	14-6-0	21-2-6	29-8-14
7-9-9	6-8-7	6-8-6	8-6-8

Plate Offsets (X,Y)-- [6:0-2-11,Edge], [11:0-1-13,0-3-8]

LOADING (psf)		SPACING- 2-0-0		CSI.		DEFL.	in	(loc)	l/defl	L/d	PLATES	GRIP
TCLL	25.0	Plate Grip DOL	1.15	TC	0.86	Vert(LL)	-0.17	9-10	>999	360	MT20	197/144
TCDL	10.0	Lumber DOL	1.15	BC	0.86	Vert(CT)	-0.34	9-10	>999	240		
BCLL	0.0 *	Rep Stress Incr	YES	WB	0.92	Horz(CT)	0.07	6	n/a	n/a		
BCDL	10.0	Code IRC2018/TPI2014		Matrix-S		Wind(LL)	0.07	9-10	>999	240	Weight: 108 lb	FT = 10%

LUMBER-

TOP CHORD	2x4 SPF 2100F 1.8E
BOT CHORD	2x4 SPF No.2 *Except* 6-8: 2x6 SPF No.2
WEBS	2x3 SPF No.2 *Except* 2-11: 2x10 SP DSS

BRACING-

TOP CHORD	Structural wood sheathing directly applied or 2-4-4 oc purlins, except end verticals.
BOT CHORD	Rigid ceiling directly applied or 10-0-0 oc bracing.
WEBS	1 Row at midpt 5-9

REACTIONS. (size) 6=Mechanical, 11=0-3-8
Max Horz 11=-95(LC 6)
Max Uplift 6=-19(LC 9), 11=-27(LC 8)
Max Grav 6=1316(LC 1), 11=1408(LC 1)

FORCES. (lb) - Max. Comp./Max. Ten. - All forces 250 (lb) or less except when shown.
TOP CHORD 2-3=-2101/37, 3-4=-1550/73, 4-5=-1568/68, 5-6=-2373/41, 2-11=-1300/72
BOT CHORD 10-11=-32/1743, 9-10=-32/1743, 7-9=0/2025, 6-7=0/2023
WEBS 3-10=0/267, 3-9=-589/112, 4-9=0/867, 5-9=-877/116, 5-7=0/363

NOTES-
1) Unbalanced roof live loads have been considered for this design.
2) Wind: ASCE 7-16; Vult=115mph (3-second gust) Vasd=91mph; TCDL=6.0psf; BCDL=6.0psf; h=25ft; Cat. II; Exp C; Enclosed; MWFRS (envelope); cantilever left and right exposed ; end vertical left and right exposed; Lumber DOL=1.60 plate grip DOL=1.60
3) This truss has been designed for a 10.0 psf bottom chord live load nonconcurrent with any other live loads.
4) * This truss has been designed for a live load of 20.0psf on the bottom chord in all areas where a rectangle 3-6-0 tall by 2-0-0 wide will fit between the bottom chord and any other members.
5) Refer to girder(s) for truss to truss connections.
6) Provide mechanical connection (by others) of truss to bearing plate capable of withstanding 100 lb uplift at joint(s) 6, 11.
7) This truss is designed in accordance with the 2018 International Residential Code sections R502.11.1 and R802.10.2 and referenced standard ANSI/TPI 1.

STATE OF MISSOURI
JUAN GARCIA
NUMBER E-2000162101
PROFESSIONAL ENGINEER

JUAN GARCIA
LICENSED
16952
KANSAS
PROFESSIONAL ENGINEER

March 5,2021

MiTek
16023 Swingley Ridge Rd
Chesterfield, MO 63017

Job	Truss	Truss Type	Qty	Ply	Lot 64 W2
210319	C5	Roof Special	3	1	I45078961 Job Reference (optional)

Wheeler Lumber, Waverly, KS - 66871, 8.430 s Feb 12 2021 MiTek Industries, Inc. Fri Mar 5 13:50:23 2021 Page 1
ID:pq50?Ycap6WpLXoTu4wfY2za1nE-XlzmLmujAeD0jqtvXIrbiv4LCq2rpCNqGaJmoPzdyM_

-0-10-8	7-9-9	14-6-0	17-9-8	25-0-0	28-8-8	29-8-14
0-10-8	7-9-9	6-8-7	3-3-8	7-2-8	3-8-8	1-0-6

Scale = 1:64.7

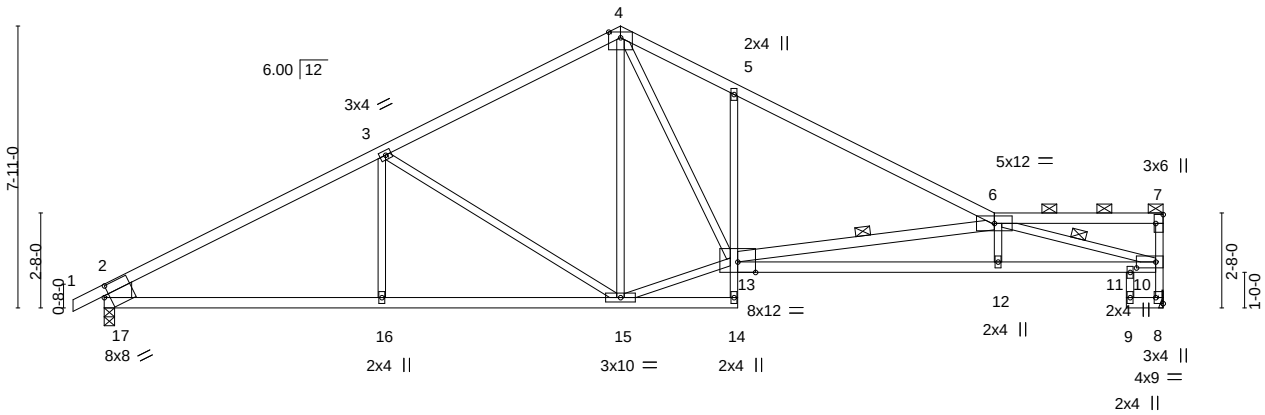

7-9-9	14-6-0	17-9-8	25-0-0	28-8-8	29-8-14
7-9-9	6-8-7	3-3-8	7-2-8	3-8-8	1-0-6

Plate Offsets (X,Y)-- [7:Edge,0-2-8], [8:Edge,0-2-8], [10:0-6-8,0-2-0], [17:0-1-13,0-3-8]

LOADING (psf)		**SPACING-** 2-0-0	**CSI.**		**DEFL.** in (loc) l/defl L/d	**PLATES**	**GRIP**
TCLL	25.0	Plate Grip DOL 1.15	TC	0.86	Vert(LL) -0.28 12-13 >999 360	MT20	197/144
TCDL	10.0	Lumber DOL 1.15	BC	0.86	Vert(CT) -0.57 12-13 >612 240		
BCLL	0.0 *	Rep Stress Incr YES	WB	0.99	Horz(CT) 0.21 8 n/a n/a		
BCDL	10.0	Code IRC2018/TPI2014	Matrix-S		Wind(LL) 0.14 12-13 >999 240	Weight: 119 lb	FT = 10%

LUMBER-

TOP CHORD 2x4 SPF 2100F 1.8E *Except*
6-7: 2x4 SPF No.2
BOT CHORD 2x4 SPF No.2 *Except*
5-14: 2x3 SPF No.2, 10-13: 2x4 SPF 2100F 1.8E
WEBS 2x3 SPF No.2 *Except*
6-13: 2x4 SPF No.2, 2-17: 2x10 SP DSS

BRACING-

TOP CHORD Structural wood sheathing directly applied or 3-1-0 oc purlins, except end verticals, and 2-0-0 oc purlins (6-0-0 max.): 6-7.
BOT CHORD Rigid ceiling directly applied or 10-0-0 oc bracing, Except: 6-0-0 oc bracing: 14-15.
WEBS 1 Row at midpt 6-13, 6-10

REACTIONS. (size) 8=Mechanical, 17=0-3-8
Max Horz 17=145(LC 5)
Max Uplift 8=-22(LC 9), 17=-26(LC 8)
Max Grav 8=1314(LC 1), 17=1406(LC 1)

FORCES. (lb) - Max. Comp./Max. Ten. - All forces 250 (lb) or less except when shown.
TOP CHORD 2-3=-2097/36, 3-4=-1548/65, 4-5=-2196/122, 5-6=-2249/37, 8-10=-1288/28, 2-17=-1297/72
BOT CHORD 16-17=-37/1741, 15-16=-37/1741, 5-13=-460/157, 12-13=-49/3758, 11-12=-42/3763, 10-11=-42/3763
WEBS 3-16=0/266, 3-15=-585/112, 13-15=0/1355, 4-13=-103/1416, 6-13=-1867/66, 6-10=-3768/23

NOTES-

1) Unbalanced roof live loads have been considered for this design.
2) Wind: ASCE 7-16; Vult=115mph (3-second gust) Vasd=91mph; TCDL=6.0psf; BCDL=6.0psf; h=25ft; Cat. II; Exp C; Enclosed; MWFRS (envelope); cantilever left and right exposed ; end vertical left and right exposed; Lumber DOL=1.60 plate grip DOL=1.60
3) Provide adequate drainage to prevent water ponding.
4) This truss has been designed for a 10.0 psf bottom chord live load nonconcurrent with any other live loads.
5) * This truss has been designed for a live load of 20.0psf on the bottom chord in all areas where a rectangle 3-6-0 tall by 2-0-0 wide will fit between the bottom chord and any other members.
6) Refer to girder(s) for truss to truss connections.
7) Provide mechanical connection (by others) of truss to bearing plate capable of withstanding 100 lb uplift at joint(s) 8, 17.
8) This truss is designed in accordance with the 2018 International Residential Code sections R502.11.1 and R802.10.2 and referenced standard ANSI/TPI 1.
9) Graphical purlin representation does not depict the size or the orientation of the purlin along the top and/or bottom chord.

STATE OF MISSOURI
JUAN GARCIA
NUMBER E-2000162101
PROFESSIONAL ENGINEER

JUAN GARCIA
LICENSED
16952
KANSAS
PROFESSIONAL ENGINEER

March 5,2021

MiTek
16023 Swingley Ridge Rd
Chesterfield, MO 63017

Job	Truss	Truss Type	Qty	Ply	Lot 64 W2
210319	C5A	Roof Special	1	1	I45078962 Job Reference (optional)

Wheeler Lumber, Waverly, KS - 66871, 8.430 s Feb 12 2021 MiTek Industries, Inc. Fri Mar 5 13:50:25 2021 Page 1
ID:pq50?Ycap6WpLXoTu4wfY2za1nE-Th4WmSvziFTkz71Heit3nKAhjdlsH6S7juotsHzdyLy

-0-10-8	7-9-10	13-1-8	14-6-0	15-10-0	21-2-6	25-0-0	28-8-8	29-8-14
0-10-8	7-9-10	5-3-15	1-4-8	1-4-0	5-4-6	3-9-10	3-8-8	1-0-6

Scale = 1:53.6

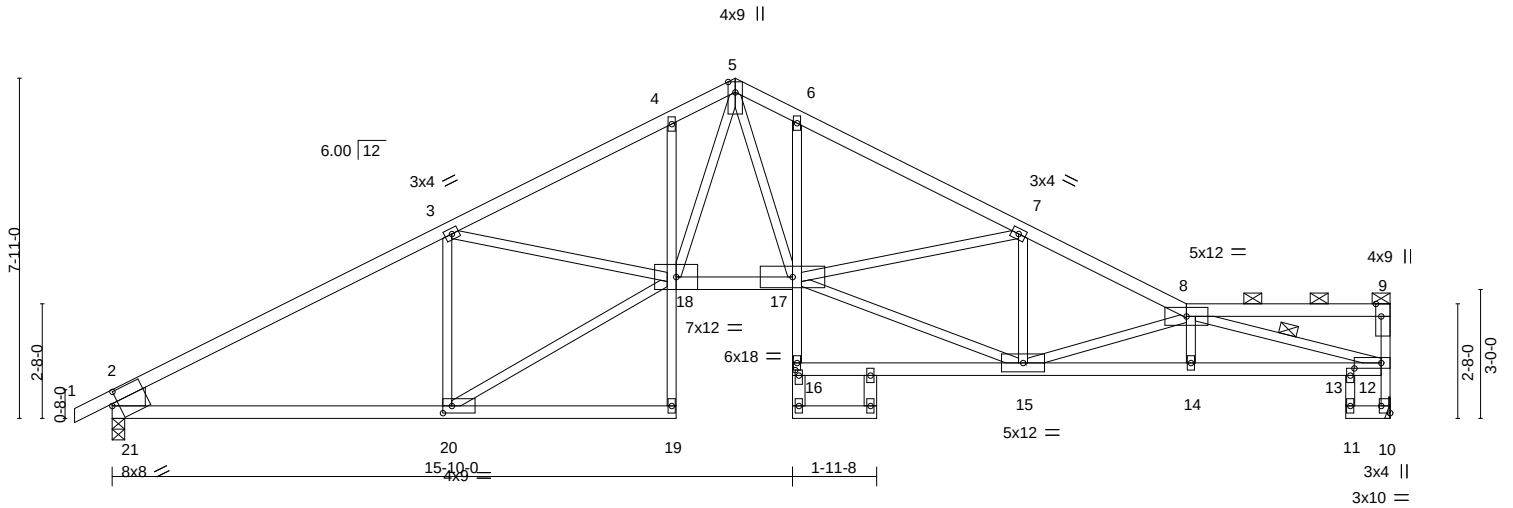

7-9-10	13-1-8	15-10-0	21-2-6	25-0-0	28-8-8	29-8-14
7-9-10	5-3-15	2-8-8	5-4-6	3-9-10	3-8-8	1-0-6

Plate Offsets (X,Y)-- [9:0-3-8,Edge], [10:Edge,0-2-8], [12:0-7-8,0-1-8], [16:0-1-8,0-1-0], [20:0-2-8,0-2-0], [21:0-1-13,0-3-8]

LOADING (psf)		SPACING-	2-0-0	CSI.		DEFL.	in	(loc)	l/defl	L/d	PLATES	GRIP
TCLL	25.0	Plate Grip DOL	1.15	TC	0.86	Vert(LL)	-0.30	6	>999	360	MT20	197/144
TCDL	10.0	Lumber DOL	1.15	BC	0.83	Vert(CT)	-0.54	17-18	>653	240		
BCLL	0.0 *	Rep Stress Incr	YES	WB	0.95	Horz(CT)	0.30	10	n/a	n/a		
BCDL	10.0	Code IRC2018/TPI2014		Matrix-S		Wind(LL)	0.14	6	>999	240	Weight: 130 lb	FT = 10%

LUMBER-

TOP CHORD 2x4 SPF No.2 *Except*
1-5: 2x4 SPF 2100F 1.8E
BOT CHORD 2x4 SPF No.2 *Except*
4-19,6-16: 2x3 SPF No.2, 12-16: 2x4 SPF 2100F 1.8E
WEBS 2x3 SPF No.2 *Except*
2-21: 2x10 SP DSS, 16-22,23-24: 2x4 SPF No.2

BRACING-

TOP CHORD Structural wood sheathing directly applied or 3-0-14 oc purlins, except end verticals, and 2-0-0 oc purlins (6-0-0 max.): 8-9.
BOT CHORD Rigid ceiling directly applied or 10-0-0 oc bracing.
WEBS 1 Row at midpt 8-12

REACTIONS. (size) 10=Mechanical, 21=0-3-8
Max Horz 21=145(LC 5)
Max Uplift 10=-22(LC 9), 21=-26(LC 8)
Max Grav 10=1314(LC 1), 21=1406(LC 1)

FORCES. (lb) - Max. Comp./Max. Ten. - All forces 250 (lb) or less except when shown.
TOP CHORD 2-3=-2082/34, 3-4=-2824/28, 4-5=-2773/66, 5-6=-2790/74, 6-7=-2850/22, 7-8=-2801/34, 10-12=-1286/28, 2-21=-1299/74
BOT CHORD 20-21=-34/1722, 4-18=-256/70, 17-18=0/2081, 6-17=-256/105, 14-15=-53/3648, 13-14=-49/3647, 12-13=-49/3647
WEBS 3-20=-892/101, 18-20=-40/1966, 3-18=0/752, 5-18=-75/1210, 5-17=-89/1302, 15-17=-20/2615, 7-15=-366/55, 8-15=-1240/39, 8-12=-3623/33

NOTES-

1) Unbalanced roof live loads have been considered for this design.
2) Wind: ASCE 7-16; Vult=115mph (3-second gust) Vasd=91mph; TCDL=6.0psf; BCDL=6.0psf; h=25ft; Cat. II; Exp C; Enclosed; MWFRS (envelope); cantilever left and right exposed ; end vertical left and right exposed; Lumber DOL=1.60 plate grip DOL=1.60
3) Provide adequate drainage to prevent water ponding.
4) All plates are 2x4 MT20 unless otherwise indicated.
5) This truss has been designed for a 10.0 psf bottom chord live load nonconcurrent with any other live loads.
6) * This truss has been designed for a live load of 20.0psf on the bottom chord in all areas where a rectangle 3-6-0 tall by 2-0-0 wide will fit between the bottom chord and any other members.
7) Refer to girder(s) for truss to truss connections.
8) Provide mechanical connection (by others) of truss to bearing plate capable of withstanding 100 lb uplift at joint(s) 10, 21.
9) This truss is designed in accordance with the 2018 International Residential Code sections R502.11.1 and R802.10.2 and referenced standard ANSI/TPI 1.
10) Graphical purlin representation does not depict the size or the orientation of the purlin along the top and/or bottom chord.

STATE OF MISSOURI
JUAN GARCIA
NUMBER E-2000162101
PROFESSIONAL ENGINEER

JUAN GARCIA
LICENSED
16952
KANSAS
PROFESSIONAL ENGINEER

March 5,2021

MiTek
16023 Swingley Ridge Rd
Chesterfield, MO 63017

Job	Truss	Truss Type	Qty	Ply	Lot 64 W2
210319	C6	Roof Special	1	1	I45078963 Job Reference (optional)

Wheeler Lumber, Waverly, KS - 66871, 8.430 s Feb 12 2021 MiTek Industries, Inc. Fri Mar 5 13:50:26 2021 Page 1
ID:pq50?Ycap6WpLXoTu4wfY2za1nE-xteuzowcTZbbbHcUCQPIJXiss16z0YvHyYXQOkzdyLx

-0-10-8	2-8-5	7-9-10	14-6-0	21-2-7	25-0-0	28-8-8	29-8-14
0-10-8	2-8-5	5-1-5	6-8-6	6-8-7	3-9-9	3-8-8	1-0-6

Scale = 1:65.6

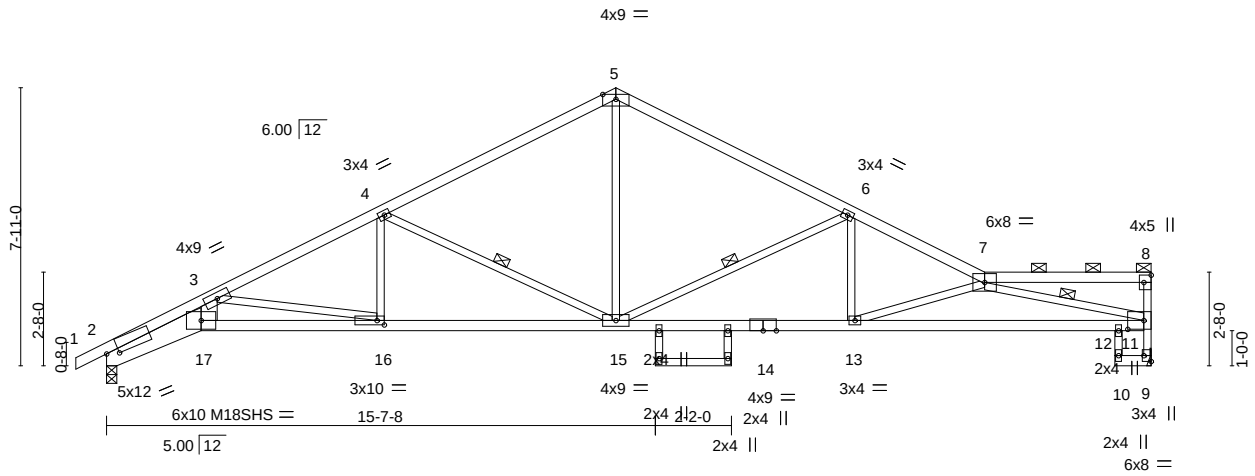

2-8-5	7-9-10	14-6-0	21-2-7	25-0-0	28-8-8	29-8-14
2-8-5	5-1-5	6-8-6	6-8-7	3-9-9	3-8-8	1-0-6

Plate Offsets (X,Y)-- [2:0-4-3,0-1-5], [8:Edge,0-2-8], [9:Edge,0-2-8], [11:0-5-8,0-3-0], [16:0-2-8,0-1-8]

LOADING (psf)		SPACING-	2-0-0	CSI.		DEFL.	in	(loc)	l/defl	L/d	PLATES	GRIP
TCLL	25.0	Plate Grip DOL	1.15	TC	0.89	Vert(LL)	-0.29	13-15	>999	360	MT20	197/144
TCDL	10.0	Lumber DOL	1.15	BC	0.71	Vert(CT)	-0.52	13-15	>683	240	M18SHS	197/144
BCLL	0.0 *	Rep Stress Incr	YES	WB	1.00	Horz(CT)	0.34	9	n/a	n/a		
BCDL	10.0	Code IRC2018/TPI2014		Matrix-S		Wind(LL)	0.15	16-17	>999	240	Weight: 119 lb	FT = 10%

LUMBER-
TOP CHORD 2x4 SPF No.2
BOT CHORD 2x4 SPF 2100F 1.8E *Except*
2-17: 2x8 SP DSS, 9-10: 2x4 SPF No.2, 18-19: 2x3 SPF No.2
WEBS 2x3 SPF No.2 *Except*
3-17: 2x6 SPF No.2

BRACING-
TOP CHORD Structural wood sheathing directly applied or 2-1-2 oc purlins, except end verticals, and 2-0-0 oc purlins (6-0-0 max.): 7-8.
BOT CHORD Rigid ceiling directly applied or 10-0-0 oc bracing.
WEBS 1 Row at midpt 4-15, 6-15, 7-11

REACTIONS. (size) 9=Mechanical, 2=0-3-8
Max Horz 2=139(LC 7)
Max Uplift 9=-22(LC 9), 2=-25(LC 8)
Max Grav 9=1326(LC 1), 2=1400(LC 1)

FORCES. (lb) - Max. Comp./Max. Ten. - All forces 250 (lb) or less except when shown.
TOP CHORD 2-3=-5461/135, 3-4=-2724/49, 4-5=-1803/53, 5-6=-1800/56, 6-7=-2846/27, 9-11=-1300/32
BOT CHORD 2-17=-181/4887, 16-17=-160/4030, 15-16=-38/2416, 13-15=-13/2534, 12-13=-95/3680, 11-12=-95/3680
WEBS 3-17=-21/1841, 3-16=-1637/123, 4-16=0/425, 4-15=-1005/116, 5-15=0/1073, 6-15=-1136/92, 6-13=0/552, 7-13=-1219/87, 7-11=-3673/110

NOTES-
1) Unbalanced roof live loads have been considered for this design.
2) Wind: ASCE 7-16; Vult=115mph (3-second gust) Vasd=91mph; TCDL=6.0psf; BCDL=6.0psf; h=25ft; Cat. II; Exp C; Enclosed; MWFRS (envelope); cantilever left and right exposed ; end vertical left and right exposed; Lumber DOL=1.60 plate grip DOL=1.60
3) Provide adequate drainage to prevent water ponding.
4) All plates are MT20 plates unless otherwise indicated.
5) This truss has been designed for a 10.0 psf bottom chord live load nonconcurrent with any other live loads.
6) * This truss has been designed for a live load of 20.0psf on the bottom chord in all areas where a rectangle 3-6-0 tall by 2-0-0 wide will fit between the bottom chord and any other members.
7) Refer to girder(s) for truss to truss connections.
8) Bearing at joint(s) 2 considers parallel to grain value using ANSI/TPI 1 angle to grain formula. Building designer should verify capacity of bearing surface.
9) Provide mechanical connection (by others) of truss to bearing plate capable of withstanding 100 lb uplift at joint(s) 9, 2.
10) This truss is designed in accordance with the 2018 International Residential Code sections R502.11.1 and R802.10.2 and referenced standard ANSI/TPI 1.
11) Graphical purlin representation does not depict the size or the orientation of the purlin along the top and/or bottom chord.

STATE OF MISSOURI
JUAN GARCIA
NUMBER E-2000162101
PROFESSIONAL ENGINEER

JUAN GARCIA
LICENSED
16952
KANSAS
PROFESSIONAL ENGINEER

March 5,2021

MiTek
16023 Swingley Ridge Rd
Chesterfield, MO 63017

Job	Truss	Truss Type	Qty	Ply	Lot 64 W2
210319	C7	Roof Special	1	1	I45078964 Job Reference (optional)

Wheeler Lumber, Waverly, KS - 66871, 8.430 s Feb 12 2021 MiTek Industries, Inc. Fri Mar 5 13:50:27 2021 Page 1
ID:pq50?Ycap6WpLXoTu4wfY2za1nE-P3CGB8xEEsjSCRAgm7wXslF1bRSyl0rQBCH_wAzdyLw

-0-10-8	2-8-5	7-9-10	14-6-0	15-7-8	21-2-7	29-8-14
0-10-8	2-8-5	5-1-5	6-8-6	1-1-8	5-6-15	8-6-7

Scale = 1:54.1

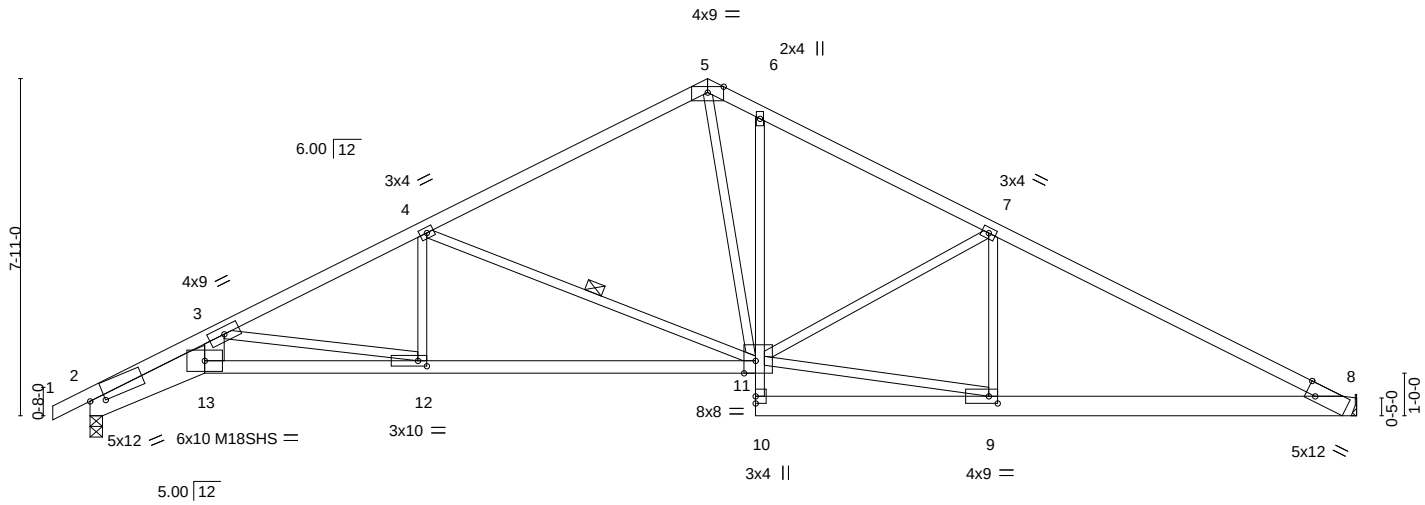

2-8-5	7-9-10	15-7-8	21-2-7	29-8-14
2-8-5	5-1-5	7-9-14	5-6-15	8-6-7

Plate Offsets (X,Y)-- [2:0-4-3,0-1-5], [8:0-2-11,Edge], [9:0-2-8,0-2-0], [11:0-3-4,Edge], [12:0-2-8,0-1-8]

LOADING (psf)		**SPACING-** 2-0-0		**CSI.**		**DEFL.**	in	(loc)	l/defl	L/d	**PLATES**	**GRIP**
TCLL	25.0	Plate Grip DOL	1.15	TC	0.90	Vert(LL)	-0.25	12-13	>999	360	MT20	197/144
TCDL	10.0	Lumber DOL	1.15	BC	0.72	Vert(CT)	-0.47	11-12	>759	240	M18SHS	197/144
BCLL	0.0 *	Rep Stress Incr	YES	WB	0.96	Horz(CT)	0.25	8	n/a	n/a		
BCDL	10.0	Code IRC2018/TPI2014		Matrix-S		Wind(LL)	0.14	12-13	>999	240	Weight: 125 lb	FT = 10%

LUMBER-

TOP CHORD 2x4 SPF No.2 *Except*
5-8: 2x4 SPF 2100F 1.8E
BOT CHORD 2x4 SPF 2100F 1.8E *Except*
2-13: 2x8 SP DSS, 6-10: 2x3 SPF No.2, 8-10: 2x6 SPF No.2
WEBS 2x3 SPF No.2 *Except*
3-13: 2x6 SPF No.2

BRACING-

TOP CHORD Structural wood sheathing directly applied or 2-1-3 oc purlins.
BOT CHORD Rigid ceiling directly applied or 10-0-0 oc bracing, Except:
6-0-0 oc bracing: 9-10.
WEBS 1 Row at midpt 4-11

REACTIONS. (size) 8=Mechanical, 2=0-3-8
Max Horz 2=88(LC 7)
Max Uplift 8=-19(LC 9), 2=-25(LC 8)
Max Grav 8=1328(LC 1), 2=1402(LC 1)

FORCES. (lb) - Max. Comp./Max. Ten. - All forces 250 (lb) or less except when shown.
TOP CHORD 2-3=-5450/138, 3-4=-2744/40, 4-5=-1698/60, 5-6=-1785/68, 6-7=-1937/45, 7-8=-2400/39
BOT CHORD 2-13=-180/4875, 12-13=-156/4027, 11-12=-25/2434, 8-9=0/2047
WEBS 3-13=-28/1821, 3-12=-1615/132, 4-12=0/480, 4-11=-1100/102, 5-11=-14/1161, 9-11=0/1993, 7-11=-549/118

NOTES-

1) Unbalanced roof live loads have been considered for this design.
2) Wind: ASCE 7-16; Vult=115mph (3-second gust) Vasd=91mph; TCDL=6.0psf; BCDL=6.0psf; h=25ft; Cat. II; Exp C; Enclosed; MWFRS (envelope); cantilever left and right exposed ; end vertical left and right exposed; Lumber DOL=1.60 plate grip DOL=1.60
3) All plates are MT20 plates unless otherwise indicated.
4) This truss has been designed for a 10.0 psf bottom chord live load nonconcurrent with any other live loads.
5) * This truss has been designed for a live load of 20.0psf on the bottom chord in all areas where a rectangle 3-6-0 tall by 2-0-0 wide will fit between the bottom chord and any other members.
6) Refer to girder(s) for truss to truss connections.
7) Bearing at joint(s) 2 considers parallel to grain value using ANSI/TPI 1 angle to grain formula. Building designer should verify capacity of bearing surface.
8) Provide mechanical connection (by others) of truss to bearing plate capable of withstanding 100 lb uplift at joint(s) 8, 2.
9) This truss is designed in accordance with the 2018 International Residential Code sections R502.11.1 and R802.10.2 and referenced standard ANSI/TPI 1.

STATE OF MISSOURI
JUAN GARCIA
NUMBER E-2000162101
PROFESSIONAL ENGINEER

JUAN GARCIA
LICENSED
16952
KANSAS
PROFESSIONAL ENGINEER

March 5,2021

MiTek
16023 Swingley Ridge Rd
Chesterfield, MO 63017

Job	Truss	Truss Type	Qty	Ply	Lot 64 W2
210319	C8	Roof Special	1	1	I45078965 Job Reference (optional)

Wheeler Lumber, Waverly, KS - 66871, 8.430 s Feb 12 2021 MiTek Industries, Inc. Fri Mar 5 13:50:29 2021 Page 1
ID:pq50?Ycap6WpLXoTu4wfY2za1nE-LSK1cpyUlU_9SlK3tYy?xAKNZF5PDwnjeWm4?3zdyLu

-0-10-8	2-8-5	7-9-10	14-6-0	15-7-8	21-2-7	29-0-0
0-10-8	2-8-5	5-1-5	6-8-6	1-1-8	5-6-15	7-9-9

Scale = 1:53.6

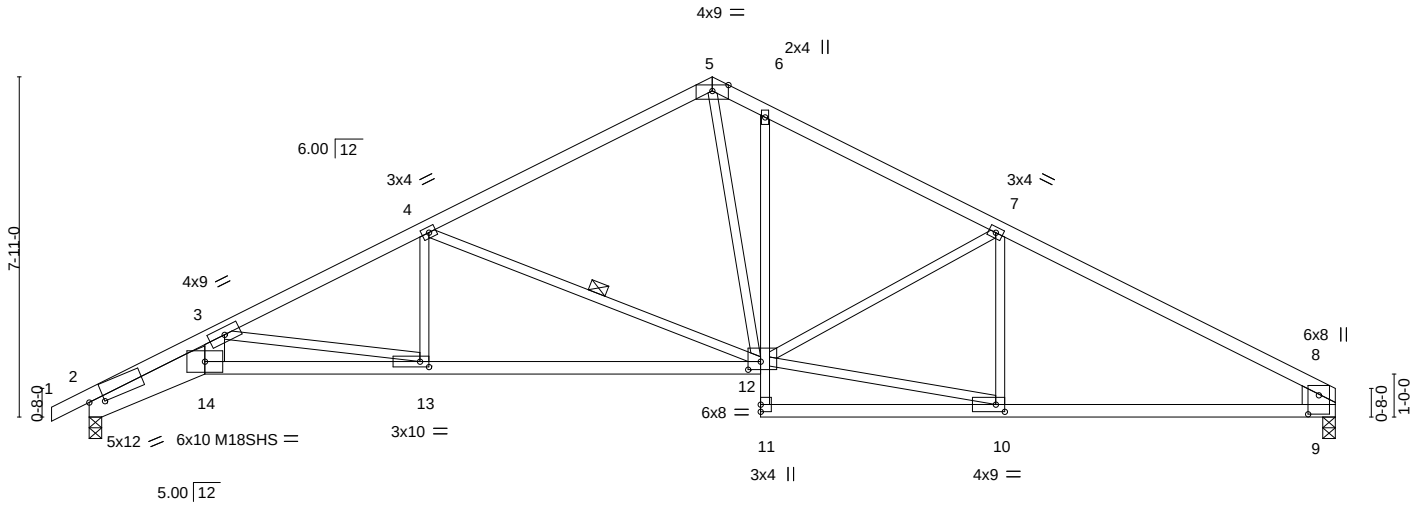

2-8-5	7-9-10	15-7-8	21-2-7	29-0-0
2-8-5	5-1-5	7-9-14	5-6-15	7-9-9

Plate Offsets (X,Y)-- [2:0-4-3,0-1-5], [8:0-5-5,0-3-0], [10:0-2-8,0-2-0], [12:0-3-8,0-2-4], [13:0-2-8,0-1-8]

LOADING (psf)		**SPACING-** 2-0-0	**CSI.**		**DEFL.** in (loc) l/defl L/d	**PLATES**	**GRIP**
TCLL	25.0	Plate Grip DOL 1.15	TC	0.87	Vert(LL) -0.27 10-11 >999 360	MT20	197/144
TCDL	10.0	Lumber DOL 1.15	BC	0.85	Vert(CT) -0.54 12-13 >628 240	M18SHS	197/144
BCLL	0.0 *	Rep Stress Incr YES	WB	0.93	Horz(CT) 0.24 9 n/a n/a		
BCDL	10.0	Code IRC2018/TPI2014	Matrix-S		Wind(LL) 0.20 13-14 >999 240	Weight: 117 lb	FT = 10%

LUMBER-
TOP CHORD 2x4 SPF No.2
BOT CHORD 2x4 SPF 2100F 1.8E *Except*
2-14: 2x8 SP DSS, 6-11: 2x3 SPF No.2
WEBS 2x3 SPF No.2 *Except*
3-14: 2x6 SPF No.2, 8-9: 2x10 SP DSS

BRACING-
TOP CHORD Structural wood sheathing directly applied, except end verticals.
BOT CHORD Rigid ceiling directly applied or 9-6-4 oc bracing.
WEBS 1 Row at midpt 4-12

REACTIONS. (size) 2=0-3-8, 9=0-3-8
Max Horz 2=139(LC 12)
Max Uplift 2=-184(LC 8), 9=-158(LC 9)
Max Grav 2=1354(LC 1), 9=1280(LC 1)

FORCES. (lb) - Max. Comp./Max. Ten. - All forces 250 (lb) or less except when shown.
TOP CHORD 2-3=-5236/785, 3-4=-2619/333, 4-5=-1582/228, 5-6=-1695/275, 6-7=-1792/236, 7-8=-1998/243, 8-9=-1131/198
BOT CHORD 2-14=-811/4683, 13-14=-679/3867, 12-13=-310/2321, 9-10=-136/1669
WEBS 3-14=-258/1752, 3-13=-1567/374, 4-13=0/475, 4-12=-1090/278, 5-12=-167/1135, 10-12=-112/1624, 7-12=-278/185, 7-10=-268/112

NOTES-
1) Unbalanced roof live loads have been considered for this design.
2) Wind: ASCE 7-16; Vult=115mph (3-second gust) Vasd=91mph; TCDL=6.0psf; BCDL=6.0psf; h=25ft; Cat. II; Exp C; Enclosed; MWFRS (envelope) gable end zone; cantilever left and right exposed ; end vertical left and right exposed; Lumber DOL=1.60 plate grip DOL=1.60
3) All plates are MT20 plates unless otherwise indicated.
4) This truss has been designed for a 10.0 psf bottom chord live load nonconcurrent with any other live loads.
5) * This truss has been designed for a live load of 20.0psf on the bottom chord in all areas where a rectangle 3-6-0 tall by 2-0-0 wide will fit between the bottom chord and any other members.
6) Bearing at joint(s) 2 considers parallel to grain value using ANSI/TPI 1 angle to grain formula. Building designer should verify capacity of bearing surface.
7) Provide mechanical connection (by others) of truss to bearing plate capable of withstanding 100 lb uplift at joint(s) except (jt=lb) 2=184, 9=158.
8) This truss is designed in accordance with the 2018 International Residential Code sections R502.11.1 and R802.10.2 and referenced standard ANSI/TPI 1.

March 5,2021

MiTek
16023 Swingley Ridge Rd
Chesterfield, MO 63017

Job	Truss	Truss Type	Qty	Ply	Lot 64 W2
210319	C9	GABLE	1	1	I45078966 Job Reference (optional)

Wheeler Lumber, Waverly, KS - 66871, 8.430 s Feb 12 2021 MiTek Industries, Inc. Fri Mar 5 13:50:30 2021 Page 1
ID:pq50?Ycap6WpLXoTu4wfY2za1nE-qeuPp9z6Wn603vvFRGTEUNtcpeYOyXTstAVeXVzdyLt

-0-10-8 | 14-6-0 | 15-7-12 | 21-2-7 | 29-0-0 | 29-10-8
0-10-8 | 14-6-0 | 1-1-12 | 5-6-11 | 7-9-9 | 0-10-8

Scale = 1:54.6

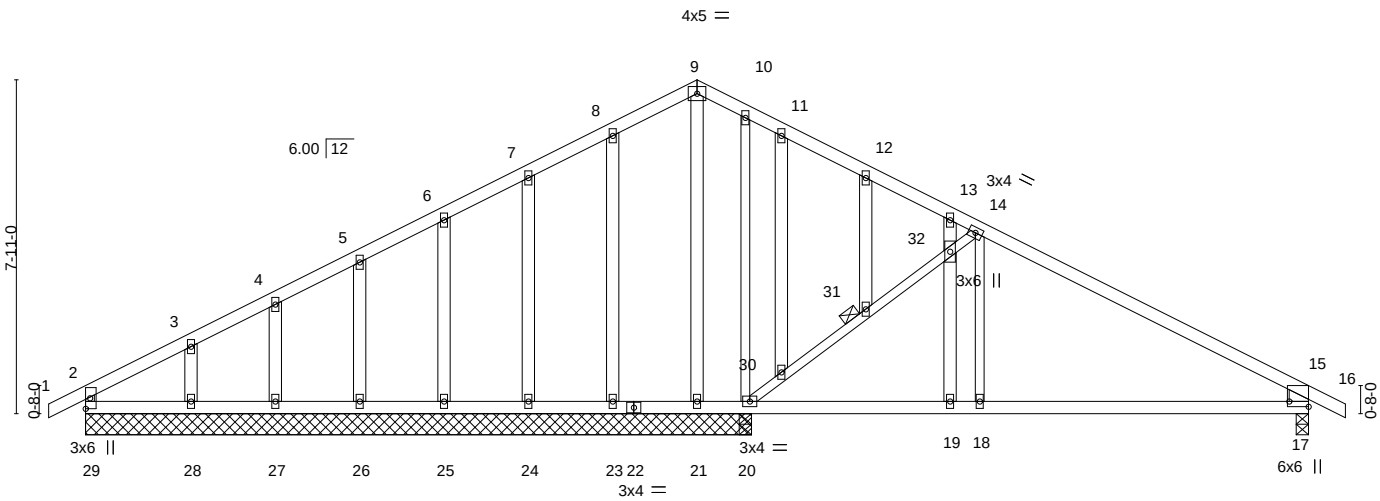

Plate Offsets (X,Y)-- [17:Edge,0-5-8]

LOADING (psf)		SPACING- 2-0-0		CSI.		DEFL. in (loc) l/defl L/d		PLATES GRIP
TCLL 25.0		Plate Grip DOL 1.15		TC 0.58		Vert(LL) -0.08 17-18 >999 360		MT20 197/144
TCDL 10.0		Lumber DOL 1.15		BC 0.42		Vert(CT) -0.17 17-18 >951 240		
BCLL 0.0	*	Rep Stress Incr YES		WB 0.26		Horz(CT) 0.01 17 n/a n/a		
BCDL 10.0		Code IRC2018/TPI2014		Matrix-S		Wind(LL) 0.03 17-18 >999 240		Weight: 138 lb FT = 10%

LUMBER-

TOP CHORD	2x4 SPF No.2
BOT CHORD	2x4 SPF No.2
WEBS	2x3 SPF No.2 *Except* 15-17: 2x6 SPF No.2
OTHERS	2x4 SPF No.2

BRACING-

TOP CHORD	Structural wood sheathing directly applied or 5-11-1 oc purlins, except end verticals.
BOT CHORD	Rigid ceiling directly applied or 6-0-0 oc bracing, Except: 10-0-0 oc bracing: 19-20,18-19,17-18.
JOINTS	1 Brace at Jt(s): 31

REACTIONS. All bearings 15-9-8 except (jt=length) 17=0-3-8.
(lb) - Max Horz 29=121(LC 8)
Max Uplift All uplift 100 lb or less at joint(s) 29, 21, 23, 24, 25, 26, 27, 28 except 20=-185(LC 9), 17=-172(LC 9)
Max Grav All reactions 250 lb or less at joint(s) 29, 21, 23, 24, 25, 26, 27, 28 except 20=725(LC 22), 20=721(LC 1), 17=664(LC 1)

FORCES. (lb) - Max. Comp./Max. Ten. - All forces 250 (lb) or less except when shown.

TOP CHORD	8-9=-35/250, 9-10=-43/259, 14-15=-703/226, 15-17=-600/220
BOT CHORD	19-20=-97/525, 18-19=-97/525, 17-18=-97/525
WEBS	20-30=-685/222, 30-31=-661/212, 31-32=-635/197, 14-32=-706/235, 14-18=0/325

NOTES-

1) Unbalanced roof live loads have been considered for this design.
2) Wind: ASCE 7-16; Vult=115mph (3-second gust) Vasd=91mph; TCDL=6.0psf; BCDL=6.0psf; h=25ft; Cat. II; Exp C; Enclosed; MWFRS (envelope) gable end zone; cantilever left and right exposed ; end vertical left and right exposed; Lumber DOL=1.60 plate grip DOL=1.60
3) Truss designed for wind loads in the plane of the truss only. For studs exposed to wind (normal to the face), see Standard Industry Gable End Details as applicable, or consult qualified building designer as per ANSI/TPI 1.
4) All plates are 2x4 MT20 unless otherwise indicated.
5) Gable studs spaced at 2-0-0 oc.
6) This truss has been designed for a 10.0 psf bottom chord live load nonconcurrent with any other live loads.
7) * This truss has been designed for a live load of 20.0psf on the bottom chord in all areas where a rectangle 3-6-0 tall by 2-0-0 wide will fit between the bottom chord and any other members.
8) Provide mechanical connection (by others) of truss to bearing plate capable of withstanding 100 lb uplift at joint(s) 29, 21, 23, 24, 25, 26, 27, 28 except (jt=lb) 20=185, 17=172.
9) This truss is designed in accordance with the 2018 International Residential Code sections R502.11.1 and R802.10.2 and referenced standard ANSI/TPI 1.

STATE OF MISSOURI
JUAN GARCIA
NUMBER E-2000162101
PROFESSIONAL ENGINEER

JUAN GARCIA
LICENSED
16952
KANSAS
PROFESSIONAL ENGINEER

March 5,2021

MiTek
16023 Swingley Ridge Rd
Chesterfield, MO 63017

Job	Truss	Truss Type	Qty	Ply	Lot 64 W2
210319	D1	Common	2	1	I45078967 Job Reference (optional)

Wheeler Lumber, Waverly, KS - 66871, 8.430 s Feb 12 2021 MiTek Industries, Inc. Fri Mar 5 13:50:31 2021 Page 1
ID:pq50?Ycap6WpLXoTu4wfY2za1nE-IrSn1V_kH5Eth2UR?z_T0bPoY2vah1L05qFB3xzdyLs

-0-10-8 | 6-10-0 | 13-8-0 | 14-6-8
0-10-8 | 6-10-0 | 6-10-0 | 0-10-8

Scale = 1:27.7

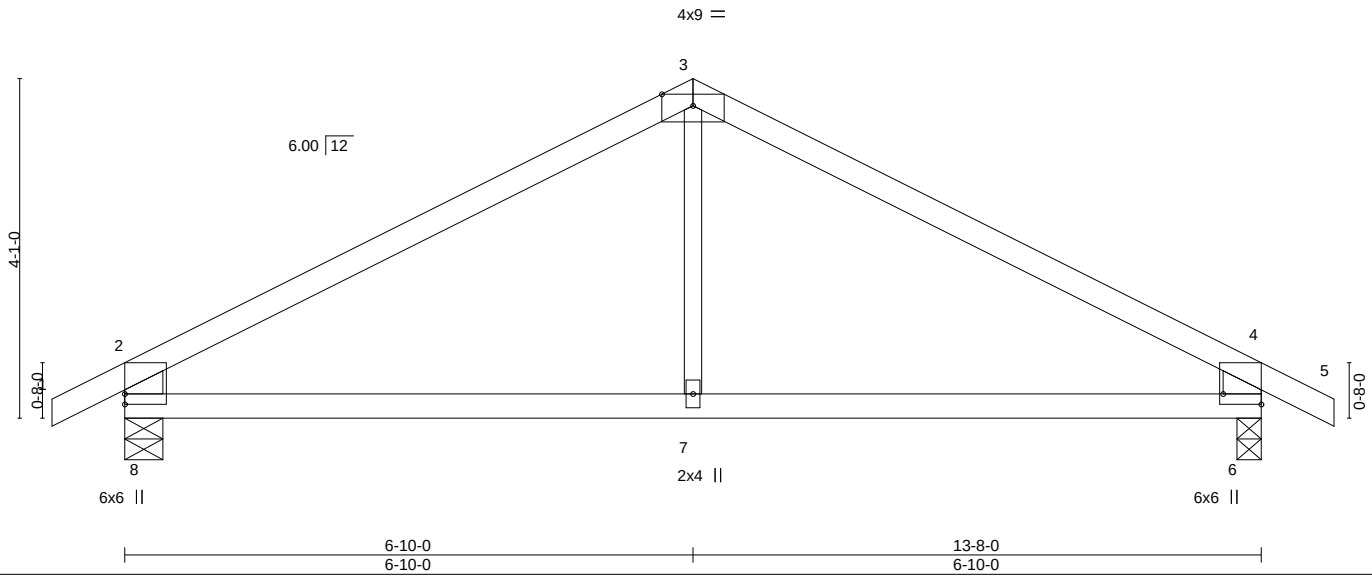

Plate Offsets (X,Y)-- [6:Edge,0-5-8]

LOADING (psf)			SPACING- 2-0-0		CSI.		DEFL. in (loc) l/defl L/d				PLATES GRIP
TCLL	25.0		Plate Grip DOL	1.15	TC	0.51	Vert(LL)	-0.04	6-7	>999	360	MT20 197/144
TCDL	10.0		Lumber DOL	1.15	BC	0.36	Vert(CT)	-0.08	6-7	>999	240	
BCLL	0.0	*	Rep Stress Incr	YES	WB	0.09	Horz(CT)	0.01	6	n/a	n/a	
BCDL	10.0		Code IRC2018/TPI2014		Matrix-R		Wind(LL)	0.02	7-8	>999	240	Weight: 39 lb FT = 10%

LUMBER-
TOP CHORD 2x4 SPF No.2
BOT CHORD 2x4 SPF No.2
WEBS 2x6 SPF No.2 *Except*
3-7: 2x3 SPF No.2

BRACING-
TOP CHORD Structural wood sheathing directly applied or 5-11-9 oc purlins, except end verticals.
BOT CHORD Rigid ceiling directly applied or 10-0-0 oc bracing.

REACTIONS. (size) 8=0-5-8, 6=0-3-8
Max Horz 8=-68(LC 6)
Max Uplift 8=-99(LC 8), 6=-99(LC 9)
Max Grav 8=672(LC 1), 6=672(LC 1)

FORCES. (lb) - Max. Comp./Max. Ten. - All forces 250 (lb) or less except when shown.
TOP CHORD 2-3=-749/102, 3-4=-749/102, 2-8=-616/146, 4-6=-616/146
BOT CHORD 7-8=-19/568, 6-7=-19/568
WEBS 3-7=0/288

NOTES-
1) Unbalanced roof live loads have been considered for this design.
2) Wind: ASCE 7-16; Vult=115mph (3-second gust) Vasd=91mph; TCDL=6.0psf; BCDL=6.0psf; h=25ft; Cat. II; Exp C; Enclosed; MWFRS (envelope) gable end zone; cantilever left and right exposed ; end vertical left and right exposed; Lumber DOL=1.60 plate grip DOL=1.60
3) This truss has been designed for a 10.0 psf bottom chord live load nonconcurrent with any other live loads.
4) * This truss has been designed for a live load of 20.0psf on the bottom chord in all areas where a rectangle 3-6-0 tall by 2-0-0 wide will fit between the bottom chord and any other members.
5) Provide mechanical connection (by others) of truss to bearing plate capable of withstanding 100 lb uplift at joint(s) 8, 6.
6) This truss is designed in accordance with the 2018 International Residential Code sections R502.11.1 and R802.10.2 and referenced standard ANSI/TPI 1.

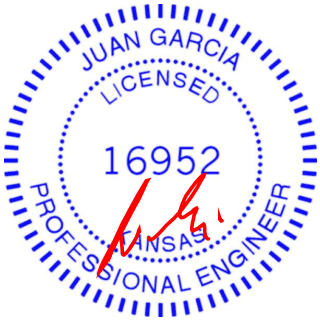

March 5,2021

MiTek
16023 Swingley Ridge Rd
Chesterfield, MO 63017

Job	Truss	Truss Type	Qty	Ply	Lot 64 W2
210319	D2	GABLE	1	1	I45078968 Job Reference (optional)

Wheeler Lumber, Waverly, KS - 66871, 8.430 s Feb 12 2021 MiTek Industries, Inc. Fri Mar 5 13:50:32 2021 Page 1
ID:pq50?Ycap6WpLXoTu4wfY2za1nE-m109Er?M2PMkJC3eZhViZoy4JSK1QVT9KU_lcNzdyLr

-0-10-8 | 6-10-0 | 13-8-0 | 14-6-8
0-10-8 | 6-10-0 | 6-10-0 | 0-10-8

Scale = 1:27.5

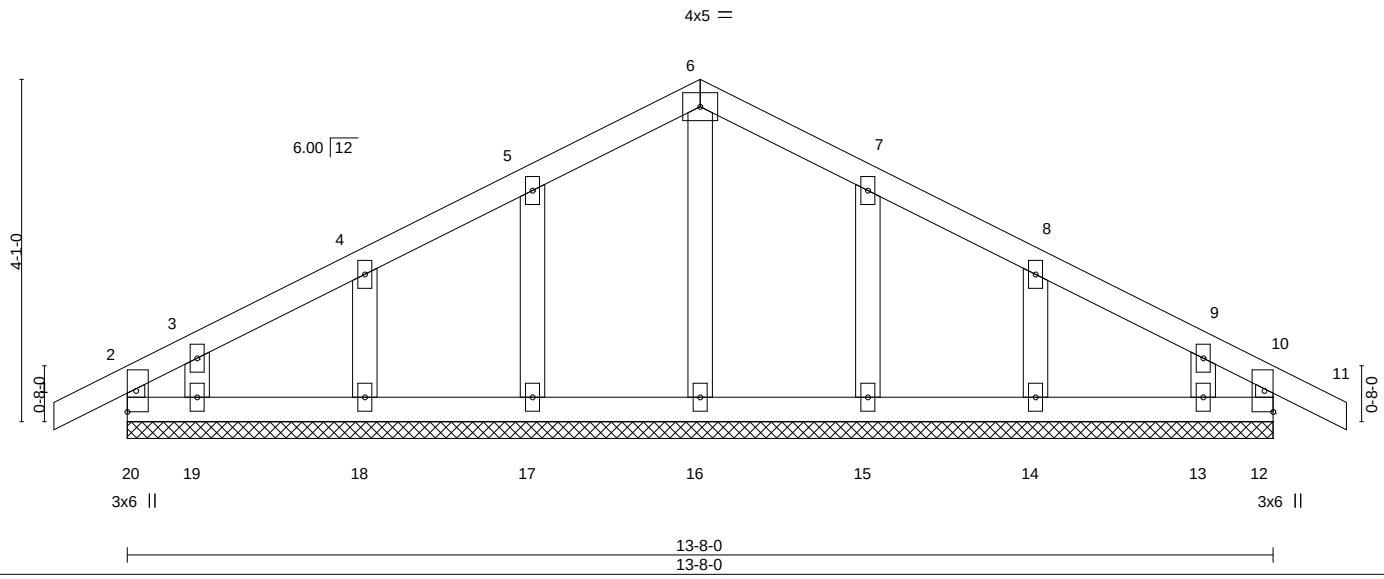

LOADING (psf)		SPACING- 2-0-0		CSI.		DEFL. in (loc) l/defl L/d		PLATES GRIP
TCLL	25.0	Plate Grip DOL	1.15	TC	0.07	Vert(LL) -0.00 11 n/r 120		MT20 197/144
TCDL	10.0	Lumber DOL	1.15	BC	0.02	Vert(CT) -0.00 11 n/r 120		
BCLL	0.0 *	Rep Stress Incr	YES	WB	0.03	Horz(CT) 0.00 12 n/a n/a		
BCDL	10.0	Code IRC2018/TPI2014		Matrix-R				Weight: 50 lb FT = 10%

LUMBER-

TOP CHORD	2x4 SPF No.2
BOT CHORD	2x4 SPF No.2
WEBS	2x3 SPF No.2
OTHERS	2x4 SPF No.2

BRACING-

TOP CHORD	Structural wood sheathing directly applied or 6-0-0 oc purlins, except end verticals.
BOT CHORD	Rigid ceiling directly applied or 6-0-0 oc bracing.

REACTIONS. All bearings 13-8-0.
(lb) - Max Horz 20=65(LC 7)
Max Uplift All uplift 100 lb or less at joint(s) 20, 12, 17, 18, 19, 15, 14, 13
Max Grav All reactions 250 lb or less at joint(s) 20, 12, 16, 17, 18, 19, 15, 14, 13

FORCES. (lb) - Max. Comp./Max. Ten. - All forces 250 (lb) or less except when shown.

NOTES-

1) Unbalanced roof live loads have been considered for this design.
2) Wind: ASCE 7-16; Vult=115mph (3-second gust) Vasd=91mph; TCDL=6.0psf; BCDL=6.0psf; h=25ft; Cat. II; Exp C; Enclosed; MWFRS (envelope) gable end zone; cantilever left and right exposed ; end vertical left and right exposed; Lumber DOL=1.60 plate grip DOL=1.60
3) Truss designed for wind loads in the plane of the truss only. For studs exposed to wind (normal to the face), see Standard Industry Gable End Details as applicable, or consult qualified building designer as per ANSI/TPI 1.
4) All plates are 2x4 MT20 unless otherwise indicated.
5) Gable requires continuous bottom chord bearing.
6) Truss to be fully sheathed from one face or securely braced against lateral movement (i.e. diagonal web).
7) Gable studs spaced at 2-0-0 oc.
8) This truss has been designed for a 10.0 psf bottom chord live load nonconcurrent with any other live loads.
9) * This truss has been designed for a live load of 20.0psf on the bottom chord in all areas where a rectangle 3-6-0 tall by 2-0-0 wide will fit between the bottom chord and any other members.
10) Provide mechanical connection (by others) of truss to bearing plate capable of withstanding 100 lb uplift at joint(s) 20, 12, 17, 18, 19, 15, 14, 13.
11) This truss is designed in accordance with the 2018 International Residential Code sections R502.11.1 and R802.10.2 and referenced standard ANSI/TPI 1.

March 5,2021

MiTek
16023 Swingley Ridge Rd
Chesterfield, MO 63017

Job	Truss	Truss Type	Qty	Ply	Lot 64 W2
210319	E1	Common Supported Gable	1	1	I45078969 Job Reference (optional)

Wheeler Lumber, Waverly, KS - 66871, 8.430 s Feb 12 2021 MiTek Industries, Inc. Fri Mar 5 13:50:33 2021 Page 1
ID:pq50?Ycap6WpLXoTu4wfY2za1nE-EDZYRB??piUbwMeq6O1x60VF2sgH9ycJZ8kI8qzdyLq

-0-10-8 | 7-8-0 | 15-4-0 | 16-2-8
0-10-8 | 7-8-0 | 7-8-0 | 0-10-8

Scale = 1:30.4

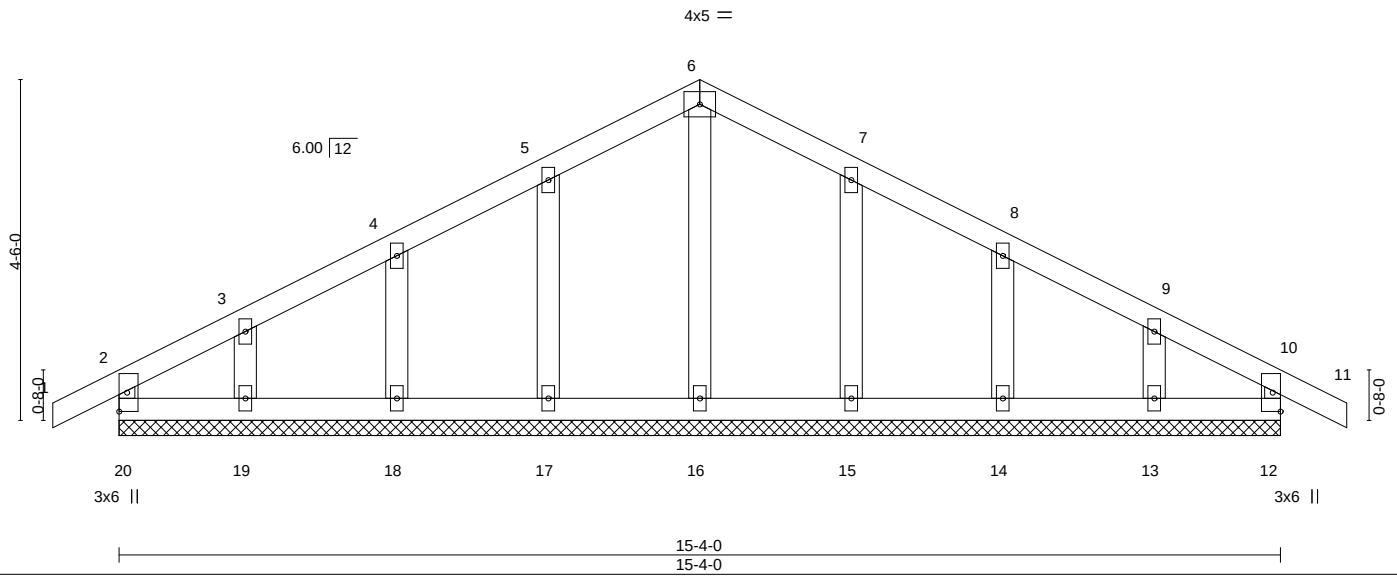

LOADING (psf)		SPACING- 2-0-0		CSI.		DEFL. in (loc) l/defl L/d		PLATES GRIP
TCLL	25.0	Plate Grip DOL	1.15	TC	0.07	Vert(LL) -0.00 11 n/r 120		MT20 197/144
TCDL	10.0	Lumber DOL	1.15	BC	0.02	Vert(CT) -0.00 11 n/r 120		
BCLL	0.0 *	Rep Stress Incr	YES	WB	0.04	Horz(CT) 0.00 12 n/a n/a		
BCDL	10.0	Code IRC2018/TPI2014		Matrix-R				Weight: 58 lb FT = 10%

LUMBER-
TOP CHORD 2x4 SPF No.2
BOT CHORD 2x4 SPF No.2
WEBS 2x3 SPF No.2
OTHERS 2x4 SPF No.2

BRACING-
TOP CHORD Structural wood sheathing directly applied or 6-0-0 oc purlins, except end verticals.
BOT CHORD Rigid ceiling directly applied or 6-0-0 oc bracing.

REACTIONS. All bearings 15-4-0.
(lb) - Max Horz 20=-71(LC 6)
Max Uplift All uplift 100 lb or less at joint(s) 20, 12, 17, 18, 19, 15, 14, 13
Max Grav All reactions 250 lb or less at joint(s) 20, 12, 16, 17, 18, 19, 15, 14, 13

FORCES. (lb) - Max. Comp./Max. Ten. - All forces 250 (lb) or less except when shown.

NOTES-
1) Unbalanced roof live loads have been considered for this design.
2) Wind: ASCE 7-16; Vult=115mph (3-second gust) Vasd=91mph; TCDL=6.0psf; BCDL=6.0psf; h=25ft; Cat. II; Exp C; Enclosed; MWFRS (envelope) gable end zone; cantilever left and right exposed ; end vertical left and right exposed; Lumber DOL=1.60 plate grip DOL=1.60
3) Truss designed for wind loads in the plane of the truss only. For studs exposed to wind (normal to the face), see Standard Industry Gable End Details as applicable, or consult qualified building designer as per ANSI/TPI 1.
4) All plates are 2x4 MT20 unless otherwise indicated.
5) Gable requires continuous bottom chord bearing.
6) Truss to be fully sheathed from one face or securely braced against lateral movement (i.e. diagonal web).
7) Gable studs spaced at 2-0-0 oc.
8) This truss has been designed for a 10.0 psf bottom chord live load nonconcurrent with any other live loads.
9) * This truss has been designed for a live load of 20.0psf on the bottom chord in all areas where a rectangle 3-6-0 tall by 2-0-0 wide will fit between the bottom chord and any other members.
10) Provide mechanical connection (by others) of truss to bearing plate capable of withstanding 100 lb uplift at joint(s) 20, 12, 17, 18, 19, 15, 14, 13.
11) This truss is designed in accordance with the 2018 International Residential Code sections R502.11.1 and R802.10.2 and referenced standard ANSI/TPI 1.

March 5,2021

MiTek
16023 Swingley Ridge Rd
Chesterfield, MO 63017

Job	Truss	Truss Type	Qty	Ply	Lot 64 W2
210319	E2	GABLE	1	2	I45078970 Job Reference (optional)

Wheeler Lumber, Waverly, KS - 66871, 8.430 s Feb 12 2021 MiTek Industries, Inc. Fri Mar 5 13:50:35 2021 Page 1
ID:pq50?Ycap6WpLXoTu4wfY2za1nE-AchIst1FLKkJAgoCEp3PBRaShfDrdjMb0SDPDizdyLo

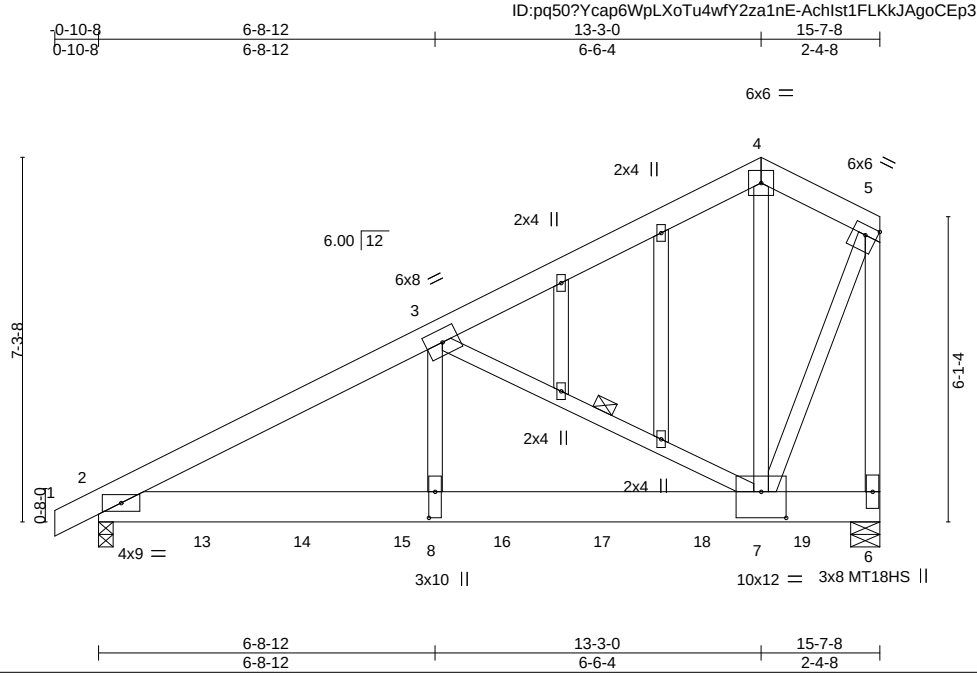

Plate Offsets (X,Y)-- [5:Edge,0-2-4], [7:0-6-0,0-6-4], [8:0-6-4,0-1-8]

LOADING (psf)		SPACING-	2-0-0	CSI.		DEFL.	in	(loc)	l/defl	L/d	PLATES	GRIP
TCLL	25.0	Plate Grip DOL	1.15	TC	0.70	Vert(LL)	-0.09	7-8	>999	360	MT20	197/144
TCDL	10.0	Lumber DOL	1.15	BC	0.53	Vert(CT)	-0.16	7-8	>999	240	MT18HS	197/144
BCLL	0.0 *	Rep Stress Incr	NO	WB	0.60	Horz(CT)	0.03	6	n/a	n/a		
BCDL	10.0	Code IRC2018/TPI2014		Matrix-S		Wind(LL)	0.05	2-8	>999	240	Weight: 240 lb	FT = 10%

LUMBER-

TOP CHORD	2x6 SPF No.2
BOT CHORD	2x8 SP DSS
WEBS	2x4 SPF No.2
OTHERS	2x4 SPF No.2

BRACING-

TOP CHORD	Structural wood sheathing directly applied or 5-1-14 oc purlins, except end verticals.
BOT CHORD	Rigid ceiling directly applied or 10-0-0 oc bracing.
WEBS	1 Row at midpt 3-7

REACTIONS. (size) 2=0-3-8 (req. 0-4-1), 6=0-7-0
Max Horz 2=254(LC 28)
Max Uplift 2=-232(LC 8), 6=-240(LC 8)
Max Grav 2=5166(LC 1), 6=5372(LC 1)

FORCES. (lb) - Max. Comp./Max. Ten. - All forces 250 (lb) or less except when shown.

TOP CHORD	2-3=-7790/312, 3-4=-2135/123, 4-5=-2044/160, 5-6=-5471/257
BOT CHORD	2-8=-331/6846, 7-8=-331/6846
WEBS	3-8=-45/4834, 3-7=-5705/356, 4-7=-70/1560, 5-7=-196/4864

NOTES-

1) 2-ply truss to be connected together with 10d (0.131"x3") nails as follows:
Top chords connected as follows: 2x6 - 2 rows staggered at 0-9-0 oc, 2x4 - 1 row at 0-9-0 oc.
Bottom chords connected as follows: 2x8 - 2 rows staggered at 0-7-0 oc.
Webs connected as follows: 2x4 - 1 row at 0-9-0 oc.
2) All loads are considered equally applied to all plies, except if noted as front (F) or back (B) face in the LOAD CASE(S) section. Ply to ply connections have been provided to distribute only loads noted as (F) or (B), unless otherwise indicated.
3) Unbalanced roof live loads have been considered for this design.
4) Wind: ASCE 7-16; Vult=115mph (3-second gust) Vasd=91mph; TCDL=6.0psf; BCDL=6.0psf; h=25ft; Cat. II; Exp C; Enclosed; MWFRS (envelope) gable end zone; cantilever left and right exposed ; end vertical left and right exposed; Lumber DOL=1.60 plate grip DOL=1.60
5) Truss designed for wind loads in the plane of the truss only. For studs exposed to wind (normal to the face), see Standard Industry Gable End Details as applicable, or consult qualified building designer as per ANSI/TPI 1.
6) All plates are MT20 plates unless otherwise indicated.
7) Gable studs spaced at 2-0-0 oc.
8) This truss has been designed for a 10.0 psf bottom chord live load nonconcurrent with any other live loads.
9) * This truss has been designed for a live load of 20.0psf on the bottom chord in all areas where a rectangle 3-6-0 tall by 2-0-0 wide will fit between the bottom chord and any other members.
10) WARNING: Required bearing size at joint(s) 2 greater than input bearing size.
11) Provide mechanical connection (by others) of truss to bearing plate capable of withstanding 100 lb uplift at joint(s) except (jt=lb) 2=232, 6=240.
12) This truss is designed in accordance with the 2018 International Residential Code sections R502.11.1 and R802.10.2 and referenced standard ANSI/TPI 1.

March 5,2021

Continued on page 2

MiTek
16023 Swingley Ridge Rd
Chesterfield, MO 63017

NOTES-

13) Hanger(s) or other connection device(s) shall be provided sufficient to support concentrated load(s) 1308 lb down and 39 lb up at 2-0-12, 1306 lb down and 42 lb up at 4-0-12, 1294 lb down and 42 lb up at 6-0-12, 1294 lb down and 42 lb up at 8-0-12, 1294 lb down and 42 lb up at 10-0-12, and 1294 lb down and 42 lb up at 12-0-12, and 1296 lb down and 39 lb up at 14-0-12 on bottom chord. The design/selection of such connection device(s) is the responsibility of others.

LOAD CASE(S) Standard

1) Dead + Roof Live (balanced): Lumber Increase=1.15, Plate Increase=1.15
   Uniform Loads (plf)
   Vert: 1-4=-70, 4-5=-70, 2-6=-20
   Concentrated Loads (lb)
   Vert: 13=-1308(F) 14=-1306(F) 15=-1294(F) 16=-1294(F) 17=-1294(F) 18=-1294(F) 19=-1296(F)

Job	Truss	Truss Type	Qty	Ply	Lot 64 W2
210319	E3	GABLE	1	1	I45078971 Job Reference (optional)

Wheeler Lumber, Waverly, KS - 66871, 8.430 s Feb 12 2021 MiTek Industries, Inc. Fri Mar 5 13:50:36 2021 Page 1
ID:pq50?Ycap6WpLXoTu4wfY2za1nE-eoFg4C2t6dsAnqMPoWaeje7l63hPMJ5lF6yyl9zdyLn

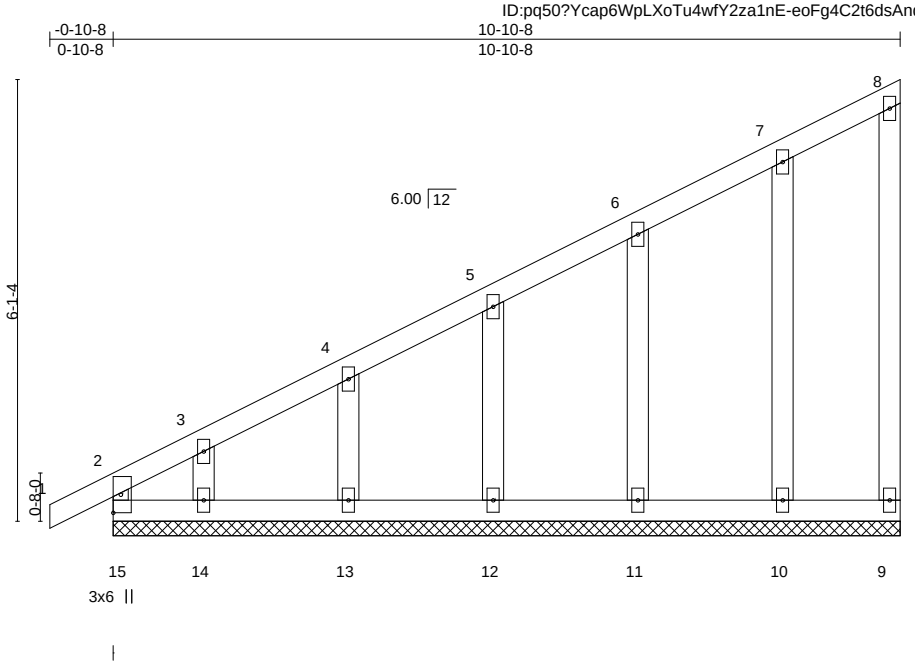

LOADING (psf)		SPACING-	2-0-0	CSI.		DEFL.	in	(loc)	l/defl	L/d	PLATES	GRIP
TCLL	25.0	Plate Grip DOL	1.15	TC	0.14	Vert(LL)	0.00	2	n/r	120	MT20	197/144
TCDL	10.0	Lumber DOL	1.15	BC	0.06	Vert(CT)	-0.00	1	n/r	120		
BCLL	0.0 *	Rep Stress Incr	YES	WB	0.06	Horz(CT)	-0.00	9	n/a	n/a		
BCDL	10.0	Code IRC2018/TPI2014		Matrix-R							Weight: 50 lb	FT = 10%

LUMBER-

TOP CHORD	2x4 SPF No.2
BOT CHORD	2x4 SPF No.2
WEBS	2x3 SPF No.2 *Except* 8-9: 2x4 SPF No.2
OTHERS	2x4 SPF No.2

BRACING-

TOP CHORD	Structural wood sheathing directly applied or 6-0-0 oc purlins, except end verticals.
BOT CHORD	Rigid ceiling directly applied or 10-0-0 oc bracing.

REACTIONS. All bearings 10-10-8.
(lb) - Max Horz 15=246(LC 5)
Max Uplift All uplift 100 lb or less at joint(s) 15, 9, 10, 11, 12, 13 except 14=-112(LC 8)
Max Grav All reactions 250 lb or less at joint(s) 15, 9, 10, 11, 12, 13, 14

FORCES. (lb) - Max. Comp./Max. Ten. - All forces 250 (lb) or less except when shown.

NOTES-
1) Wind: ASCE 7-16; Vult=115mph (3-second gust) Vasd=91mph; TCDL=6.0psf; BCDL=6.0psf; h=25ft; Cat. II; Exp C; Enclosed; MWFRS (envelope) gable end zone; cantilever left and right exposed ; end vertical left and right exposed; Lumber DOL=1.60 plate grip DOL=1.60
2) Truss designed for wind loads in the plane of the truss only. For studs exposed to wind (normal to the face), see Standard Industry Gable End Details as applicable, or consult qualified building designer as per ANSI/TPI 1.
3) All plates are 2x4 MT20 unless otherwise indicated.
4) Gable requires continuous bottom chord bearing.
5) Truss to be fully sheathed from one face or securely braced against lateral movement (i.e. diagonal web).
6) Gable studs spaced at 2-0-0 oc.
7) This truss has been designed for a 10.0 psf bottom chord live load nonconcurrent with any other live loads.
8) * This truss has been designed for a live load of 20.0psf on the bottom chord in all areas where a rectangle 3-6-0 tall by 2-0-0 wide will fit between the bottom chord and any other members.
9) Provide mechanical connection (by others) of truss to bearing plate capable of withstanding 100 lb uplift at joint(s) 15, 9, 10, 11, 12, 13 except (jt=lb) 14=112.
10) This truss is designed in accordance with the 2018 International Residential Code sections R502.11.1 and R802.10.2 and referenced standard ANSI/TPI 1.

March 5,2021

MiTek
16023 Swingley Ridge Rd
Chesterfield, MO 63017

Job	Truss	Truss Type	Qty	Ply	Lot 64 W2
210319	J1	Diagonal Hip Girder	2	1	I45078972 Job Reference (optional)

Wheeler Lumber, Waverly, KS - 66871, 8.430 s Feb 12 2021 MiTek Industries, Inc. Fri Mar 5 13:50:37 2021 Page 1
ID:pq50?Ycap6WpLXoTu4wfY2za1nE-6?p2HY2Vtx_1PzxbLE5tGsfrKTzE5mtuUmiWHbzdyLm

-1-2-14 | 2-8-7 | 5-4-4
1-2-14 | 2-8-7 | 2-7-13

Scale = 1:12.8

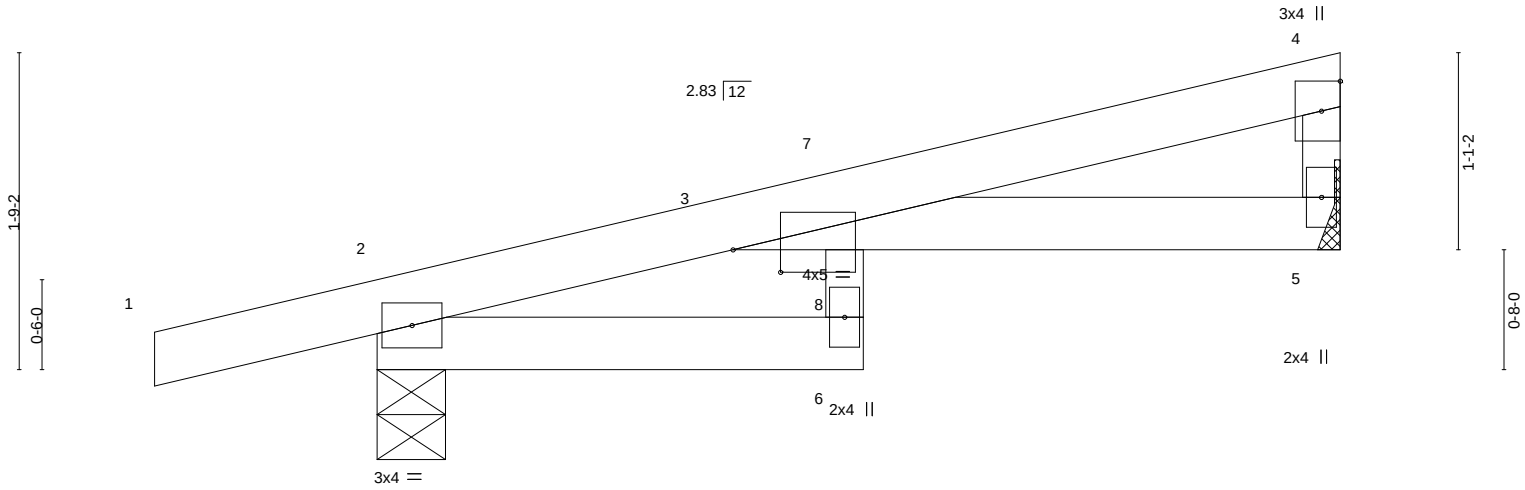

2-8-7 | 5-4-4
2-8-7 | 2-7-13

Plate Offsets (X,Y)-- [3:0-3-3,0-1-8]

LOADING (psf)			SPACING-	2-0-0	CSI.		DEFL.	in	(loc)	l/defl	L/d	PLATES	GRIP
TCLL	25.0		Plate Grip DOL	1.15	TC	0.50	Vert(LL)	-0.06	6	>944	360	MT20	197/144
TCDL	10.0		Lumber DOL	1.15	BC	0.28	Vert(CT)	-0.13	6	>475	240		
BCLL	0.0	*	Rep Stress Incr	NO	WB	0.02	Horz(CT)	0.04	5	n/a	n/a		
BCDL	10.0		Code IRC2018/TPI2014		Matrix-S		Wind(LL)	0.06	6	>999	240	Weight: 15 lb	FT = 10%

LUMBER-
TOP CHORD 2x4 SPF No.2
BOT CHORD 2x4 SPF No.2
WEBS 2x3 SPF No.2

BRACING-
TOP CHORD Structural wood sheathing directly applied or 5-4-4 oc purlins, except end verticals.
BOT CHORD Rigid ceiling directly applied or 6-0-0 oc bracing.

REACTIONS. (size) 5=Mechanical, 2=0-4-9
Max Horz 2=52(LC 5)
Max Uplift 5=-40(LC 8), 2=-102(LC 4)
Max Grav 5=219(LC 1), 2=349(LC 1)

FORCES. (lb) - Max. Comp./Max. Ten. - All forces 250 (lb) or less except when shown.

NOTES-
1) Wind: ASCE 7-16; Vult=115mph (3-second gust) Vasd=91mph; TCDL=6.0psf; BCDL=6.0psf; h=25ft; Cat. II; Exp C; Enclosed; MWFRS (envelope) gable end zone; cantilever left and right exposed ; end vertical left and right exposed; Lumber DOL=1.60 plate grip DOL=1.60
2) This truss has been designed for a 10.0 psf bottom chord live load nonconcurrent with any other live loads.
3) * This truss has been designed for a live load of 20.0psf on the bottom chord in all areas where a rectangle 3-6-0 tall by 2-0-0 wide will fit between the bottom chord and any other members.
4) Refer to girder(s) for truss to truss connections.
5) Provide mechanical connection (by others) of truss to bearing plate capable of withstanding 100 lb uplift at joint(s) 5 except (jt=lb) 2=102.
6) This truss is designed in accordance with the 2018 International Residential Code sections R502.11.1 and R802.10.2 and referenced standard ANSI/TPI 1.
7) Hanger(s) or other connection device(s) shall be provided sufficient to support concentrated load(s) 67 lb down and 31 lb up at 2-7-6, and 67 lb down and 31 lb up at 2-7-6 on top chord, and 0 lb down at 2-7-3, and 0 lb down at 2-7-3 on bottom chord. The design/selection of such connection device(s) is the responsibility of others.
8) In the LOAD CASE(S) section, loads applied to the face of the truss are noted as front (F) or back (B).

LOAD CASE(S) Standard
1) Dead + Roof Live (balanced): Lumber Increase=1.15, Plate Increase=1.15
Uniform Loads (plf)
Vert: 1-4=-70, 2-6=-20, 3-5=-20

March 5,2021

MiTek
16023 Swingley Ridge Rd
Chesterfield, MO 63017

Job	Truss	Truss Type	Qty	Ply	Lot 64 W2
210319	J2	Jack-Open	5	1	I45078973 Job Reference (optional)

Wheeler Lumber, Waverly, KS - 66871, 8.430 s Feb 12 2021 MiTek Industries, Inc. Fri Mar 5 13:50:38 2021 Page 1
ID:pq50?Ycap6WpLXoTu4wfY2za1nE-bBNRVu37eF6u17Wnvxc6p3C4ttNzqDH2iQR3p1zdyLI

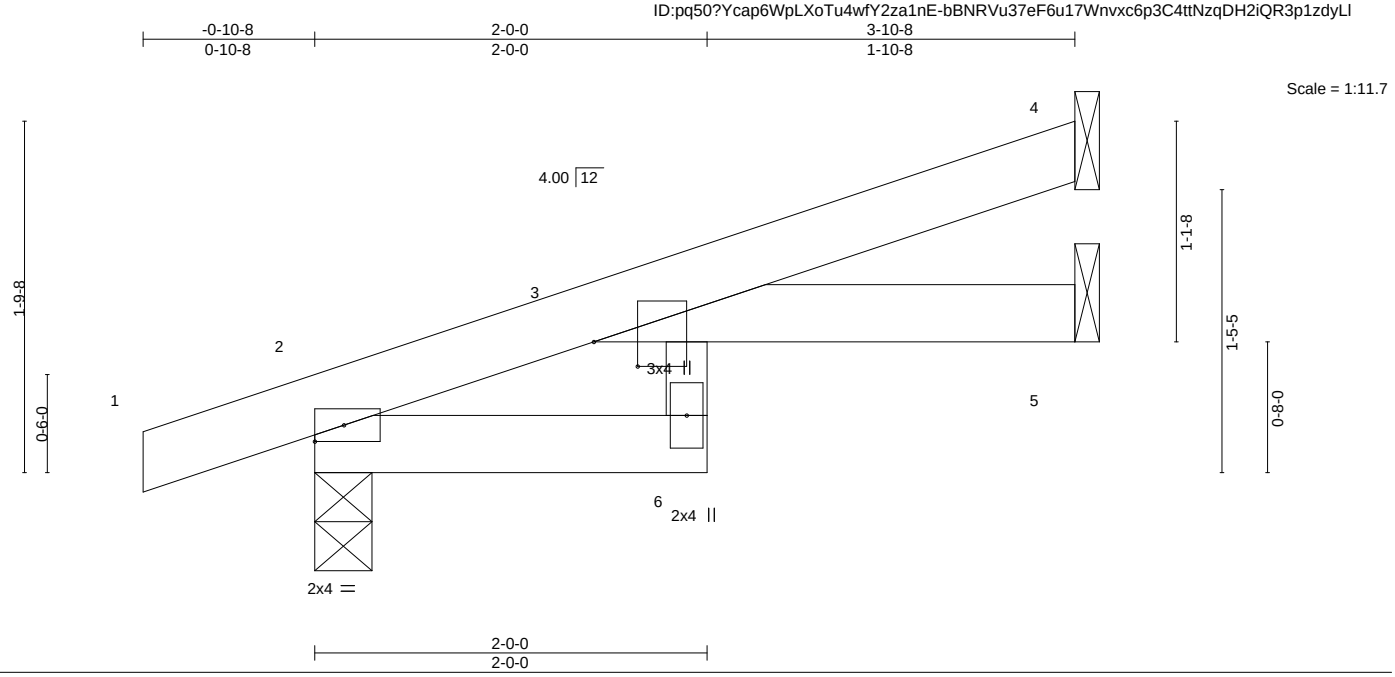

Plate Offsets (X,Y)-- [3:0-1-8,0-2-11]

LOADING (psf)		SPACING- 2-0-0		CSI.		DEFL. in (loc) l/defl L/d					PLATES	GRIP
TCLL	25.0	Plate Grip DOL	1.15	TC	0.25	Vert(LL)	-0.03	6	>999	360	MT20	197/144
TCDL	10.0	Lumber DOL	1.15	BC	0.05	Vert(CT)	-0.05	6	>820	240		
BCLL	0.0 *	Rep Stress Incr	YES	WB	0.01	Horz(CT)	0.02	5	n/a	n/a		
BCDL	10.0	Code IRC2018/TPI2014		Matrix-P		Wind(LL)	0.03	6	>999	240	Weight: 11 lb	FT = 10%

LUMBER-
TOP CHORD 2x4 SPF No.2
BOT CHORD 2x4 SPF No.2
WEBS 2x3 SPF No.2

BRACING-
TOP CHORD Structural wood sheathing directly applied or 3-10-8 oc purlins.
BOT CHORD Rigid ceiling directly applied or 6-0-0 oc bracing.

REACTIONS. (size) 4=Mechanical, 2=0-3-8, 5=Mechanical
Max Horz 2=65(LC 4)
Max Uplift 4=-52(LC 8), 2=-65(LC 4)
Max Grav 4=135(LC 1), 2=252(LC 1), 5=48(LC 3)

FORCES. (lb) - Max. Comp./Max. Ten. - All forces 250 (lb) or less except when shown.

NOTES-
1) Wind: ASCE 7-16; Vult=115mph (3-second gust) Vasd=91mph; TCDL=6.0psf; BCDL=6.0psf; h=25ft; Cat. II; Exp C; Enclosed; MWFRS (envelope) gable end zone; cantilever left and right exposed ; end vertical left and right exposed; Lumber DOL=1.60 plate grip DOL=1.60
2) This truss has been designed for a 10.0 psf bottom chord live load nonconcurrent with any other live loads.
3) * This truss has been designed for a live load of 20.0psf on the bottom chord in all areas where a rectangle 3-6-0 tall by 2-0-0 wide will fit between the bottom chord and any other members.
4) Refer to girder(s) for truss to truss connections.
5) Provide mechanical connection (by others) of truss to bearing plate capable of withstanding 100 lb uplift at joint(s) 4, 2.
6) This truss is designed in accordance with the 2018 International Residential Code sections R502.11.1 and R802.10.2 and referenced standard ANSI/TPI 1.

March 5,2021

MiTek
16023 Swingley Ridge Rd
Chesterfield, MO 63017

Job	Truss	Truss Type	Qty	Ply	Lot 64 W2
210319	J3	Jack-Open	4	1	I45078974 Job Reference (optional)

Wheeler Lumber, Waverly, KS - 66871, 8.430 s Feb 12 2021 MiTek Industries, Inc. Fri Mar 5 13:50:39 2021 Page 1
ID:pq50?Ycap6WpLXoTu4wfY2za1nE-3NxpiE4lPYEleH5_Tf7LLHlHmHjdZgkBx4BcMTzdyLk

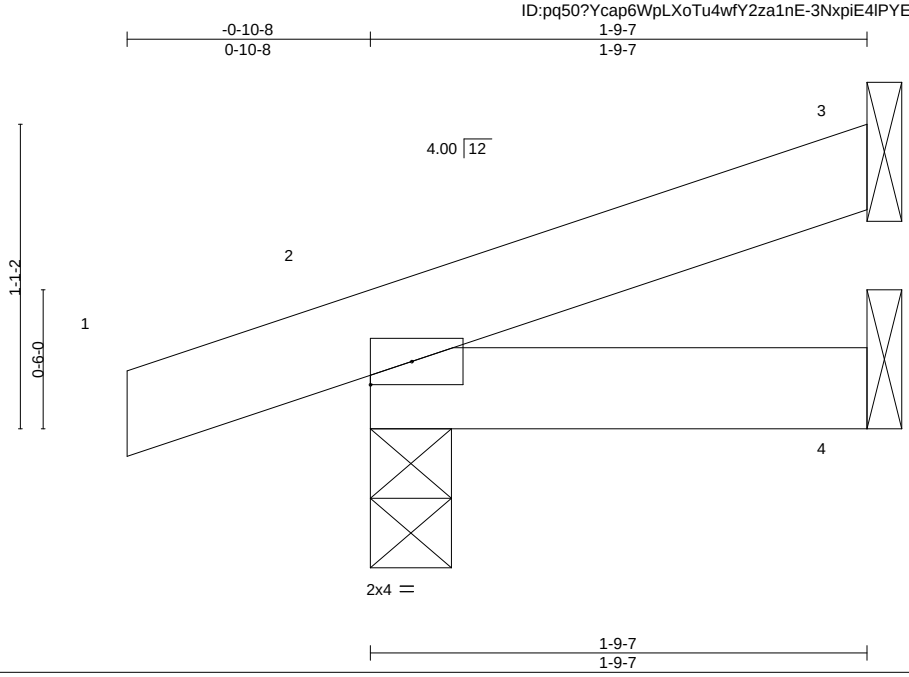

LOADING (psf)		SPACING- 2-0-0		CSI.		DEFL.	in	(loc)	l/defl	L/d	PLATES	GRIP
TCLL	25.0	Plate Grip DOL	1.15	TC	0.05	Vert(LL)	-0.00	2	>999	360	MT20	197/144
TCDL	10.0	Lumber DOL	1.15	BC	0.03	Vert(CT)	-0.00	2-4	>999	240		
BCLL	0.0 *	Rep Stress Incr	YES	WB	0.00	Horz(CT)	-0.00	3	n/a	n/a		
BCDL	10.0	Code IRC2018/TPI2014		Matrix-P		Wind(LL)	0.00	2	****	240	Weight: 5 lb	FT = 10%

LUMBER-
TOP CHORD 2x4 SPF No.2
BOT CHORD 2x4 SPF No.2

BRACING-
TOP CHORD Structural wood sheathing directly applied or 1-9-7 oc purlins.
BOT CHORD Rigid ceiling directly applied or 10-0-0 oc bracing.

REACTIONS. (size) 3=Mechanical, 2=0-3-8, 4=Mechanical
Max Horz 2=37(LC 4)
Max Uplift 3=-27(LC 8), 2=-56(LC 4)
Max Grav 3=45(LC 1), 2=158(LC 1), 4=35(LC 3)

FORCES. (lb) - Max. Comp./Max. Ten. - All forces 250 (lb) or less except when shown.

NOTES-
1) Wind: ASCE 7-16; Vult=115mph (3-second gust) Vasd=91mph; TCDL=6.0psf; BCDL=6.0psf; h=25ft; Cat. II; Exp C; Enclosed; MWFRS (envelope) gable end zone; cantilever left and right exposed ; end vertical left and right exposed; Lumber DOL=1.60 plate grip DOL=1.60
2) This truss has been designed for a 10.0 psf bottom chord live load nonconcurrent with any other live loads.
3) * This truss has been designed for a live load of 20.0psf on the bottom chord in all areas where a rectangle 3-6-0 tall by 2-0-0 wide will fit between the bottom chord and any other members.
4) Refer to girder(s) for truss to truss connections.
5) Provide mechanical connection (by others) of truss to bearing plate capable of withstanding 100 lb uplift at joint(s) 3, 2.
6) This truss is designed in accordance with the 2018 International Residential Code sections R502.11.1 and R802.10.2 and referenced standard ANSI/TPI 1.

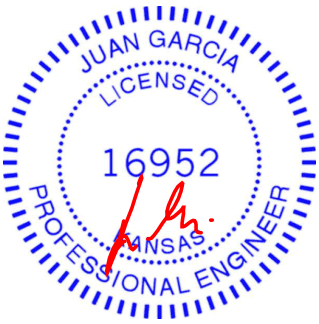

March 5,2021

MiTek
16023 Swingley Ridge Rd
Chesterfield, MO 63017

Job	Truss	Truss Type	Qty	Ply	Lot 64 W2
210319	J4	JACK-CLOSED SUPPORTE	2	1	I45078975 Job Reference (optional)

Wheeler Lumber, Waverly, KS - 66871, 8.430 s Feb 12 2021 MiTek Industries, Inc. Fri Mar 5 13:50:41 2021 Page 1
ID:pq50?Ycap6WpLXoTu4wfY2za1nE-?m2Z7w60wAUSubFMa4ApQiqde4OF1aEUPOgjQMzdyLi

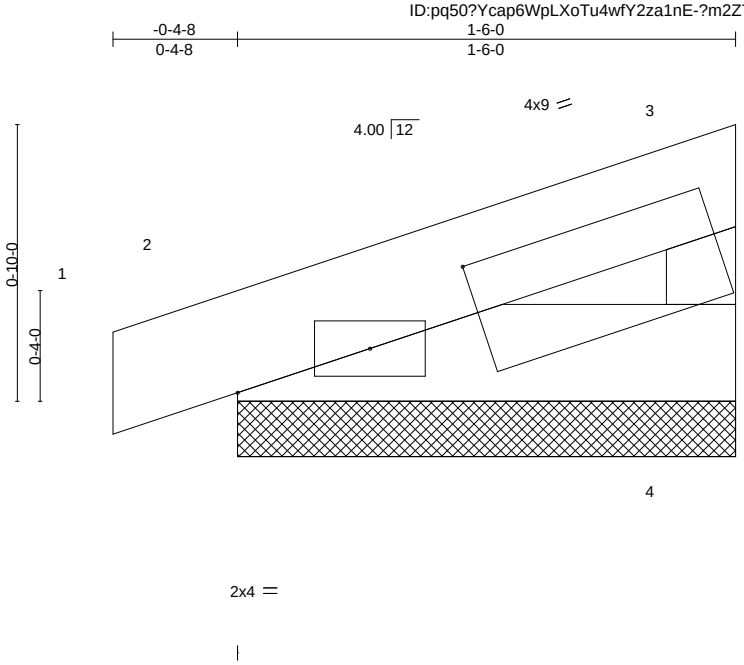

Plate Offsets (X,Y)-- [3:0-9-2,0-1-12]

LOADING (psf)		SPACING- 2-0-0		CSI.		DEFL. in (loc) l/defl L/d		PLATES GRIP
TCLL	25.0	Plate Grip DOL	1.15	TC	0.03	Vert(LL) -0.00 1 n/r 120		MT20 197/144
TCDL	10.0	Lumber DOL	1.15	BC	0.02	Vert(CT) 0.00 1 n/r 120		
BCLL	0.0 *	Rep Stress Incr	YES	WB	0.00	Horz(CT) -0.00 4 n/a n/a		
BCDL	10.0	Code IRC2018/TPI2014		Matrix-P				Weight: 4 lb FT = 10%

LUMBER-
TOP CHORD 2x4 SPF No.2
BOT CHORD 2x4 SPF No.2
WEBS 2x3 SPF No.2

BRACING-
TOP CHORD Structural wood sheathing directly applied or 1-6-0 oc purlins, except end verticals.
BOT CHORD Rigid ceiling directly applied or 10-0-0 oc bracing.

REACTIONS. (size) 4=1-6-0, 2=1-6-0
Max Horz 2=24(LC 5)
Max Uplift 4=-12(LC 8), 2=-28(LC 4)
Max Grav 4=59(LC 1), 2=93(LC 1)

FORCES. (lb) - Max. Comp./Max. Ten. - All forces 250 (lb) or less except when shown.

NOTES-
1) Wind: ASCE 7-16; Vult=115mph (3-second gust) Vasd=91mph; TCDL=6.0psf; BCDL=6.0psf; h=25ft; Cat. II; Exp C; Enclosed; MWFRS (envelope) gable end zone; cantilever left and right exposed ; end vertical left and right exposed; Lumber DOL=1.60 plate grip DOL=1.60
2) Truss designed for wind loads in the plane of the truss only. For studs exposed to wind (normal to the face), see Standard Industry Gable End Details as applicable, or consult qualified building designer as per ANSI/TPI 1.
3) Gable requires continuous bottom chord bearing.
4) Gable studs spaced at 2-0-0 oc.
5) This truss has been designed for a 10.0 psf bottom chord live load nonconcurrent with any other live loads.
6) * This truss has been designed for a live load of 20.0psf on the bottom chord in all areas where a rectangle 3-6-0 tall by 2-0-0 wide will fit between the bottom chord and any other members.
7) Provide mechanical connection (by others) of truss to bearing plate capable of withstanding 100 lb uplift at joint(s) 4, 2.
8) This truss is designed in accordance with the 2018 International Residential Code sections R502.11.1 and R802.10.2 and referenced standard ANSI/TPI 1.

STATE OF MISSOURI
JUAN GARCIA
NUMBER E-2000162101
PROFESSIONAL ENGINEER

JUAN GARCIA
LICENSED
16952
KANSAS
PROFESSIONAL ENGINEER

March 5,2021

MiTek
16023 Swingley Ridge Rd
Chesterfield, MO 63017

Job	Truss	Truss Type	Qty	Ply	Lot 64 W2
210319	J5	JACK-CLOSED	2	1	I45078976 Job Reference (optional)

Wheeler Lumber, Waverly, KS - 66871, 8.430 s Feb 12 2021 MiTek Industries, Inc. Fri Mar 5 13:50:41 2021 Page 1
ID:pq50?Ycap6WpLXoTu4wfY2za1nE-?m2Z7w60wAUSubFMa4ApQiqdg4OG1aEUPOgjQMzdyLi

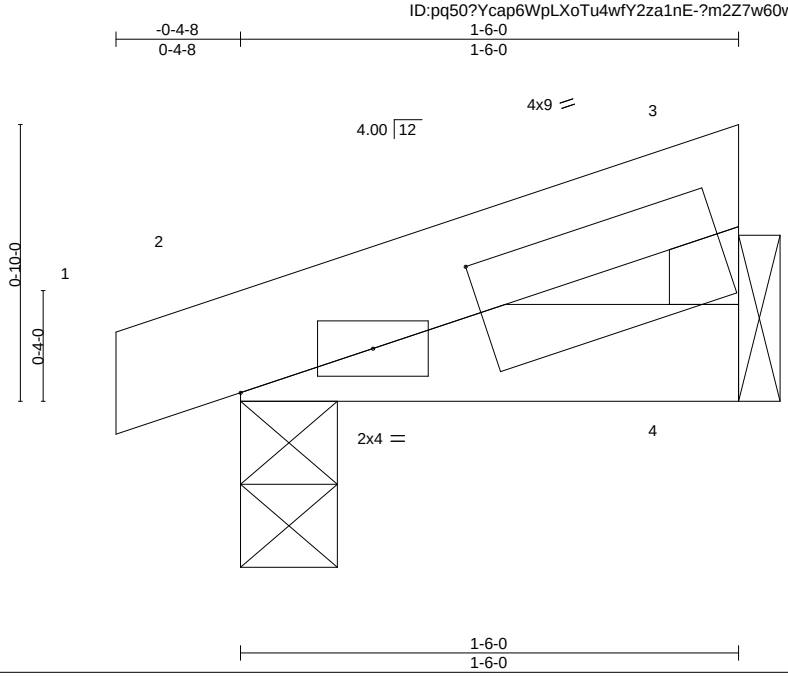

Plate Offsets (X,Y)-- [3:0-9-2,0-1-12]

LOADING (psf)			SPACING- 2-0-0		CSI.		DEFL. in (loc) l/defl L/d					PLATES	GRIP
TCLL	25.0		Plate Grip DOL	1.15	TC	0.02	Vert(LL)	-0.00	2	>999	360	MT20	197/144
TCDL	10.0		Lumber DOL	1.15	BC	0.02	Vert(CT)	-0.00	2	>999	240		
BCLL	0.0	*	Rep Stress Incr	YES	WB	0.00	Horz(CT)	-0.00	4	n/a	n/a		
BCDL	10.0		Code IRC2018/TPI2014		Matrix-P		Wind(LL)	0.00	2	****	240	Weight: 4 lb	FT = 10%

LUMBER-
TOP CHORD 2x4 SPF No.2
BOT CHORD 2x4 SPF No.2
WEBS 2x3 SPF No.2

BRACING-
TOP CHORD Structural wood sheathing directly applied or 1-6-0 oc purlins, except end verticals.
BOT CHORD Rigid ceiling directly applied or 10-0-0 oc bracing.

REACTIONS. (size) 4=Mechanical, 2=0-3-8
Max Horz 2=24(LC 5)
Max Uplift 4=-12(LC 8), 2=-30(LC 4)
Max Grav 4=57(LC 1), 2=94(LC 1)

FORCES. (lb) - Max. Comp./Max. Ten. - All forces 250 (lb) or less except when shown.

NOTES-
1) Wind: ASCE 7-16; Vult=115mph (3-second gust) Vasd=91mph; TCDL=6.0psf; BCDL=6.0psf; h=25ft; Cat. II; Exp C; Enclosed; MWFRS (envelope) gable end zone; cantilever left and right exposed ; end vertical left and right exposed; Lumber DOL=1.60 plate grip DOL=1.60
2) This truss has been designed for a 10.0 psf bottom chord live load nonconcurrent with any other live loads.
3) * This truss has been designed for a live load of 20.0psf on the bottom chord in all areas where a rectangle 3-6-0 tall by 2-0-0 wide will fit between the bottom chord and any other members.
4) Refer to girder(s) for truss to truss connections.
5) Provide mechanical connection (by others) of truss to bearing plate capable of withstanding 100 lb uplift at joint(s) 4, 2.
6) This truss is designed in accordance with the 2018 International Residential Code sections R502.11.1 and R802.10.2 and referenced standard ANSI/TPI 1.

March 5,2021

MiTek
16023 Swingley Ridge Rd
Chesterfield, MO 63017

Job	Truss	Truss Type	Qty	Ply	Lot 64 W2
210319	J6	Jack-Open Girder	2	1	I45078977 Job Reference (optional)

Wheeler Lumber, Waverly, KS - 66871, 8.430 s Feb 12 2021 MiTek Industries, Inc. Fri Mar 5 13:50:43 2021 Page 1
ID:pq50?Ycap6WpLXoTu4wfY2za1nE-x8AKYc7GSnkA7uPliUCHW7vvUu3xVTjnsh9qVFzdyLg

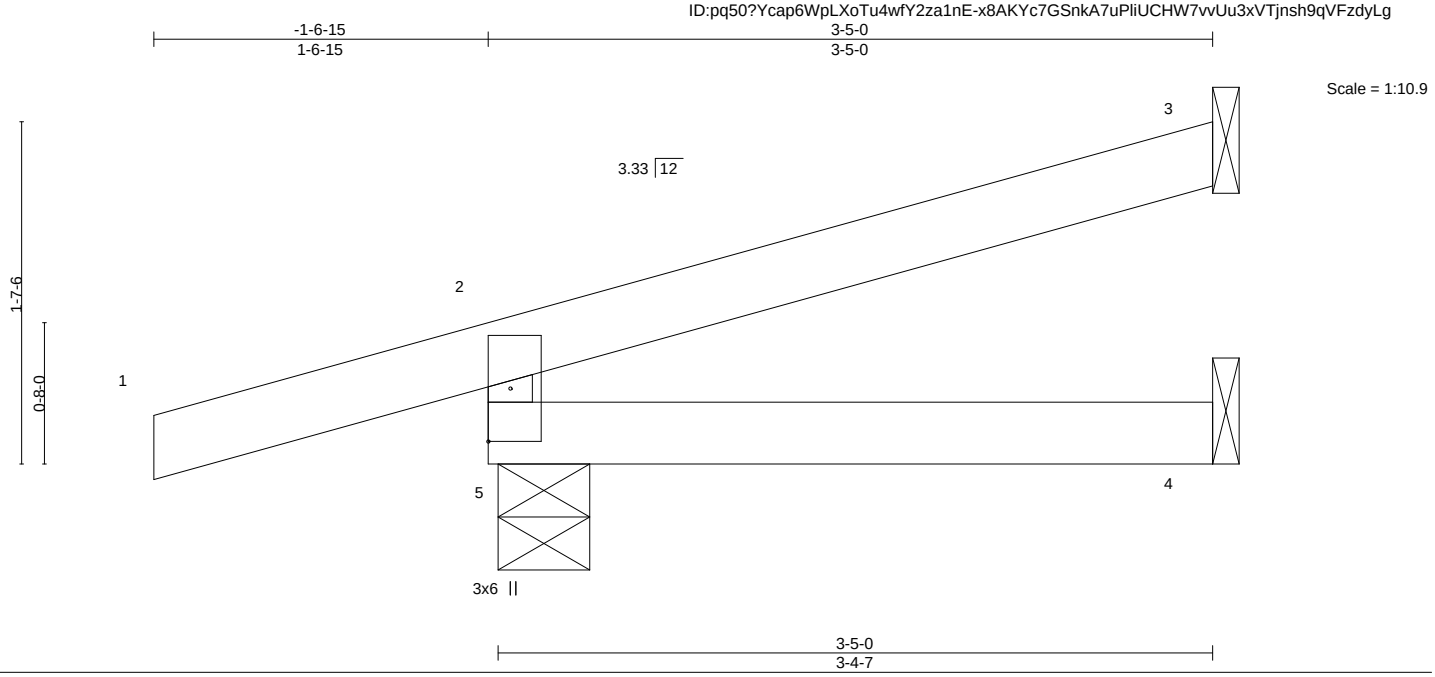

LOADING (psf)		SPACING-	2-0-0	CSI.		DEFL.	in	(loc)	l/defl	L/d	PLATES	GRIP
TCLL	25.0	Plate Grip DOL	1.15	TC	0.26	Vert(LL)	-0.01	4-5	>999	360	MT20	197/144
TCDL	10.0	Lumber DOL	1.15	BC	0.07	Vert(CT)	-0.01	4-5	>999	240		
BCLL	0.0 *	Rep Stress Incr	NO	WB	0.00	Horz(CT)	-0.00	3	n/a	n/a		
BCDL	10.0	Code IRC2018/TPI2014		Matrix-R		Wind(LL)	0.00	4-5	>999	240	Weight: 10 lb	FT = 10%

LUMBER-
TOP CHORD 2x4 SPF No.2
BOT CHORD 2x4 SPF No.2
WEBS 2x3 SPF No.2

BRACING-
TOP CHORD Structural wood sheathing directly applied or 3-5-0 oc purlins, except end verticals.
BOT CHORD Rigid ceiling directly applied or 10-0-0 oc bracing.

REACTIONS. (size) 5=0-5-3, 3=Mechanical, 4=Mechanical
Max Horz 5=58(LC 12)
Max Uplift 5=-83(LC 4), 3=-53(LC 12), 4=-2(LC 19)
Max Grav 5=176(LC 1), 3=38(LC 1), 4=45(LC 3)

FORCES. (lb) - Max. Comp./Max. Ten. - All forces 250 (lb) or less except when shown.

NOTES-
1) Wind: ASCE 7-16; Vult=115mph (3-second gust) Vasd=91mph; TCDL=6.0psf; BCDL=6.0psf; h=25ft; Cat. II; Exp C; Enclosed; MWFRS (envelope) gable end zone; cantilever left and right exposed ; end vertical left and right exposed; Lumber DOL=1.60 plate grip DOL=1.60
2) This truss has been designed for a 10.0 psf bottom chord live load nonconcurrent with any other live loads.
3) * This truss has been designed for a live load of 20.0psf on the bottom chord in all areas where a rectangle 3-6-0 tall by 2-0-0 wide will fit between the bottom chord and any other members.
4) Refer to girder(s) for truss to truss connections.
5) Provide mechanical connection (by others) of truss to bearing plate capable of withstanding 100 lb uplift at joint(s) 5, 3, 4.
6) This truss is designed in accordance with the 2018 International Residential Code sections R502.11.1 and R802.10.2 and referenced standard ANSI/TPI 1.
7) Hanger(s) or other connection device(s) shall be provided sufficient to support concentrated load(s) 39 lb down and 14 lb up at -1-6-15, and 39 lb down and 14 lb up at -1-6-15 on top chord. The design/selection of such connection device(s) is the responsibility of others.
8) In the LOAD CASE(S) section, loads applied to the face of the truss are noted as front (F) or back (B).

LOAD CASE(S) Standard
1) Dead + Roof Live (balanced): Lumber Increase=1.15, Plate Increase=1.15
Concentrated Loads (lb)
Vert: 1=-60(F=-30, B=-30)
Trapezoidal Loads (plf)
Vert: 1=0(F=35, B=35)-to-2=-42(F=14, B=14), 2=-2(F=34, B=34)-to-3=-60(F=5, B=5), 5=-0(F=10, B=10)-to-4=-17(F=1, B=1)

March 5,2021

MiTek
16023 Swingley Ridge Rd
Chesterfield, MO 63017

Job	Truss	Truss Type	Qty	Ply	Lot 64 W2
210319	J7	Jack-Open	1	1	I45078978 Job Reference (optional)

Wheeler Lumber, Waverly, KS - 66871, 8.430 s Feb 12 2021 MiTek Industries, Inc. Fri Mar 5 13:50:46 2021 Page 1
ID:pq50?Ycap6WpLXoTu4wfY2za1nE-MjsSAd98li7l_M7KNdm_7lXTm56FiqTDYfNU5ZzdyLd

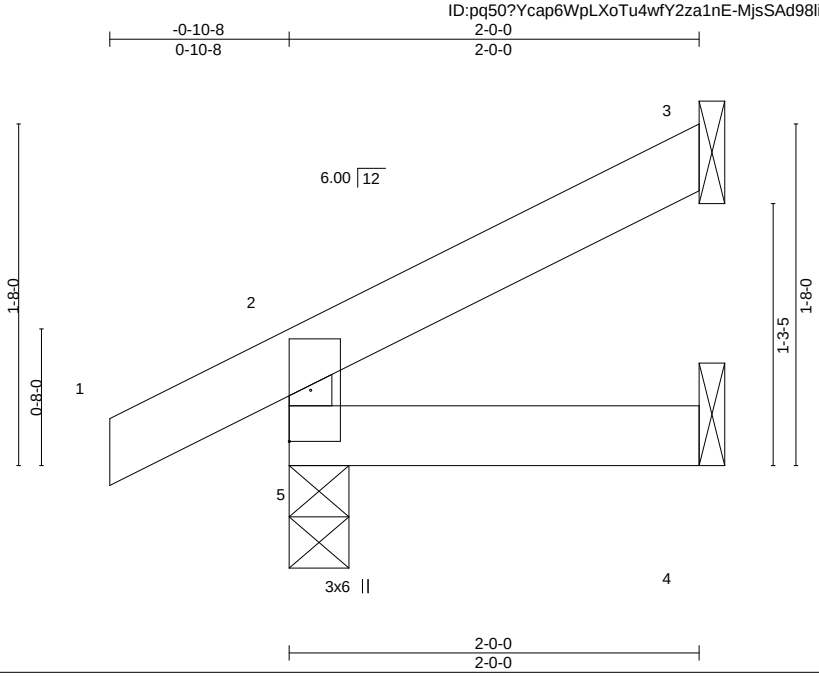

LOADING (psf)		SPACING- 2-0-0		CSI.		DEFL. in (loc) l/defl L/d		PLATES GRIP
TCLL	25.0	Plate Grip DOL	1.15	TC	0.07	Vert(LL) -0.00 5 >999 360		MT20 197/144
TCDL	10.0	Lumber DOL	1.15	BC	0.03	Vert(CT) -0.00 4-5 >999 240		
BCLL	0.0 *	Rep Stress Incr	YES	WB	0.00	Horz(CT) -0.00 3 n/a n/a		
BCDL	10.0	Code IRC2018/TPI2014		Matrix-R		Wind(LL) 0.00 5 >999 240		Weight: 6 lb FT = 10%

LUMBER-
TOP CHORD 2x4 SPF No.2
BOT CHORD 2x4 SPF No.2
WEBS 2x3 SPF No.2

BRACING-
TOP CHORD Structural wood sheathing directly applied or 2-0-0 oc purlins, except end verticals.
BOT CHORD Rigid ceiling directly applied or 10-0-0 oc bracing.

REACTIONS. (size) 5=0-3-8, 3=Mechanical, 4=Mechanical
Max Horz 5=50(LC 8)
Max Uplift 5=-25(LC 8), 3=-33(LC 8)
Max Grav 5=171(LC 1), 3=50(LC 1), 4=35(LC 3)

FORCES. (lb) - Max. Comp./Max. Ten. - All forces 250 (lb) or less except when shown.

NOTES-
1) Wind: ASCE 7-16; Vult=115mph (3-second gust) Vasd=91mph; TCDL=6.0psf; BCDL=6.0psf; h=25ft; Cat. II; Exp C; Enclosed; MWFRS (envelope) gable end zone; cantilever left and right exposed ; end vertical left and right exposed; Lumber DOL=1.60 plate grip DOL=1.60
2) This truss has been designed for a 10.0 psf bottom chord live load nonconcurrent with any other live loads.
3) * This truss has been designed for a live load of 20.0psf on the bottom chord in all areas where a rectangle 3-6-0 tall by 2-0-0 wide will fit between the bottom chord and any other members.
4) Refer to girder(s) for truss to truss connections.
5) Provide mechanical connection (by others) of truss to bearing plate capable of withstanding 100 lb uplift at joint(s) 5, 3.
6) This truss is designed in accordance with the 2018 International Residential Code sections R502.11.1 and R802.10.2 and referenced standard ANSI/TPI 1.

March 5,2021

MiTek
16023 Swingley Ridge Rd
Chesterfield, MO 63017

Job	Truss	Truss Type	Qty	Ply	Lot 64 W2
210319	J8	Jack-Open	2	1	I45078979 Job Reference (optional)

Wheeler Lumber, Waverly, KS - 66871, 8.430 s Feb 12 2021 MiTek Industries, Inc. Fri Mar 5 13:50:52 2021 Page 1
ID:pq50?Ycap6WpLXoTu4wfY2za1nE-AtDjRhEvLYtviHbUktsON0nWTW9d6Yy6wbroJDzdyLX

Scale = 1:11.2

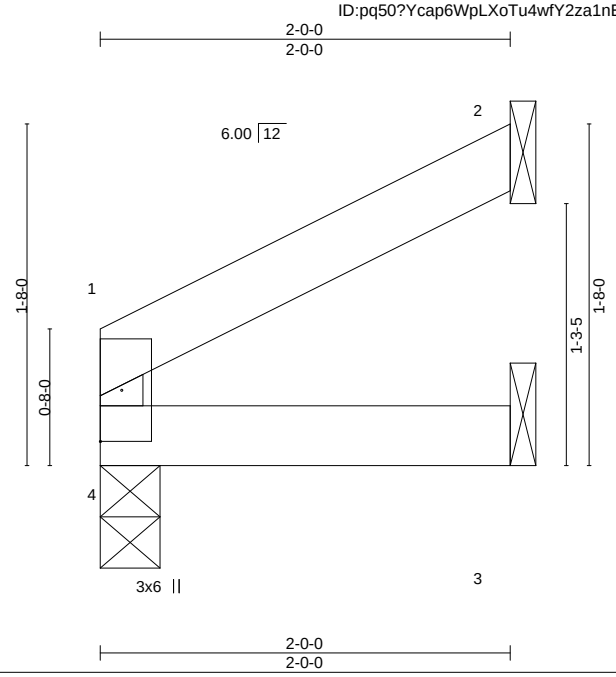

LOADING (psf)		SPACING- 2-0-0		CSI.		DEFL. in (loc) l/defl L/d		PLATES GRIP
TCLL	25.0	Plate Grip DOL	1.15	TC	0.05	Vert(LL) -0.00 4 >999 360		MT20 197/144
TCDL	10.0	Lumber DOL	1.15	BC	0.03	Vert(CT) -0.00 3-4 >999 240		
BCLL	0.0 *	Rep Stress Incr	YES	WB	0.00	Horz(CT) -0.00 2 n/a n/a		
BCDL	10.0	Code IRC2018/TPI2014		Matrix-R		Wind(LL) 0.00 4 >999 240		Weight: 5 lb FT = 10%

LUMBER-
TOP CHORD 2x4 SPF No.2
BOT CHORD 2x4 SPF No.2
WEBS 2x3 SPF No.2

BRACING-
TOP CHORD Structural wood sheathing directly applied or 2-0-0 oc purlins, except end verticals.
BOT CHORD Rigid ceiling directly applied or 10-0-0 oc bracing.

REACTIONS. (size) 4=0-3-8, 2=Mechanical, 3=Mechanical
Max Horz 4=33(LC 8)
Max Uplift 2=-37(LC 8)
Max Grav 4=85(LC 1), 2=62(LC 1), 3=37(LC 3)

FORCES. (lb) - Max. Comp./Max. Ten. - All forces 250 (lb) or less except when shown.

NOTES-
1) Wind: ASCE 7-16; Vult=115mph (3-second gust) Vasd=91mph; TCDL=6.0psf; BCDL=6.0psf; h=25ft; Cat. II; Exp C; Enclosed; MWFRS (envelope) gable end zone; cantilever left and right exposed ; end vertical left and right exposed; Lumber DOL=1.60 plate grip DOL=1.60
2) This truss has been designed for a 10.0 psf bottom chord live load nonconcurrent with any other live loads.
3) * This truss has been designed for a live load of 20.0psf on the bottom chord in all areas where a rectangle 3-6-0 tall by 2-0-0 wide will fit between the bottom chord and any other members.
4) Refer to girder(s) for truss to truss connections.
5) Provide mechanical connection (by others) of truss to bearing plate capable of withstanding 100 lb uplift at joint(s) 2.
6) This truss is designed in accordance with the 2018 International Residential Code sections R502.11.1 and R802.10.2 and referenced standard ANSI/TPI 1.

March 5,2021

MiTek
16023 Swingley Ridge Rd
Chesterfield, MO 63017

Job	Truss	Truss Type	Qty	Ply	Lot 64 W2
210319	LAY1	Lay-In Gable	1	1	I45078980 Job Reference (optional)

Wheeler Lumber, Waverly, KS - 66871, 8.430 s Feb 12 2021 MiTek Industries, Inc. Fri Mar 5 13:50:56 2021 Page 1
ID:pq50?Ycap6WpLXoTu4wfY2za1nE-3eSEG2HQOmNKBuuFzjxKXsyBU7Wc2MXhrDp0S_zdyLT

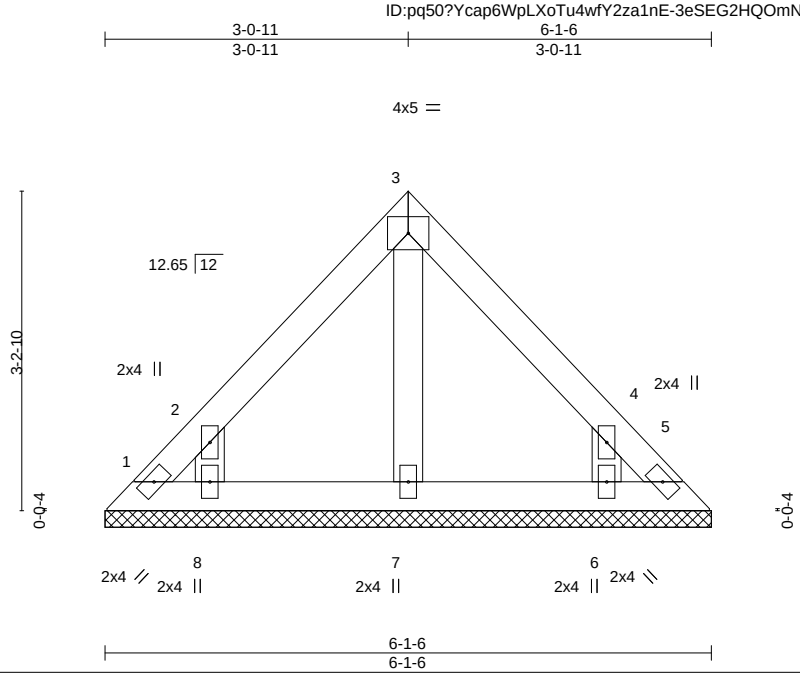

LOADING (psf)		SPACING-	2-0-0	CSI.		DEFL.	in	(loc)	l/defl	L/d	PLATES	GRIP
TCLL	25.0	Plate Grip DOL	1.15	TC	0.05	Vert(LL)	n/a	-	n/a	999	MT20	197/144
TCDL	10.0	Lumber DOL	1.15	BC	0.03	Vert(CT)	n/a	-	n/a	999		
BCLL	0.0 *	Rep Stress Incr	YES	WB	0.03	Horz(CT)	0.00	5	n/a	n/a		
BCDL	10.0	Code IRC2018/TPI2014		Matrix-P							Weight: 20 lb	FT = 10%

LUMBER-
TOP CHORD 2x4 SPF No.2
BOT CHORD 2x4 SPF No.2
OTHERS 2x4 SPF No.2

BRACING-
TOP CHORD Structural wood sheathing directly applied or 6-0-0 oc purlins.
BOT CHORD Rigid ceiling directly applied or 10-0-0 oc bracing.

REACTIONS. All bearings 6-1-6.
(lb) - Max Horz 1=-76(LC 4)
Max Uplift All uplift 100 lb or less at joint(s) 1, 5 except 8=-132(LC 8), 6=-131(LC 9)
Max Grav All reactions 250 lb or less at joint(s) 1, 5, 7, 8, 6

FORCES. (lb) - Max. Comp./Max. Ten. - All forces 250 (lb) or less except when shown.

NOTES-
1) Unbalanced roof live loads have been considered for this design.
2) Wind: ASCE 7-16; Vult=115mph (3-second gust) Vasd=91mph; TCDL=6.0psf; BCDL=6.0psf; h=25ft; Cat. II; Exp C; Enclosed; MWFRS (envelope) gable end zone; cantilever left and right exposed ; end vertical left and right exposed; Lumber DOL=1.60 plate grip DOL=1.60
3) Gable requires continuous bottom chord bearing.
4) This truss has been designed for a 10.0 psf bottom chord live load nonconcurrent with any other live loads.
5) * This truss has been designed for a live load of 20.0psf on the bottom chord in all areas where a rectangle 3-6-0 tall by 2-0-0 wide will fit between the bottom chord and any other members.
6) Provide mechanical connection (by others) of truss to bearing plate capable of withstanding 100 lb uplift at joint(s) 1, 5 except (jt=lb) 8=132, 6=131.
7) This truss is designed in accordance with the 2018 International Residential Code sections R502.11.1 and R802.10.2 and referenced standard ANSI/TPI 1.

STATE OF MISSOURI
JUAN GARCIA
NUMBER E-2000162101
PROFESSIONAL ENGINEER

JUAN GARCIA
LICENSED
16952
KANSAS
PROFESSIONAL ENGINEER

March 5,2021

MiTek
16023 Swingley Ridge Rd
Chesterfield, MO 63017

Job	Truss	Truss Type	Qty	Ply	Lot 64 W2
210319	V1A	Valley	1	1	I45078981 Job Reference (optional)

Wheeler Lumber, Waverly, KS - 66871, 8.430 s Feb 12 2021 MiTek Industries, Inc. Fri Mar 5 13:50:59 2021 Page 1
ID:pq50?Ycap6WpLXoTu4wfY2za1nE-TD8Nv4JIhhmv2MdqerU19VahbLXgFjh8XB1g3JzdyLQ

3-8-8
3-8-8

Scale = 1:8.9

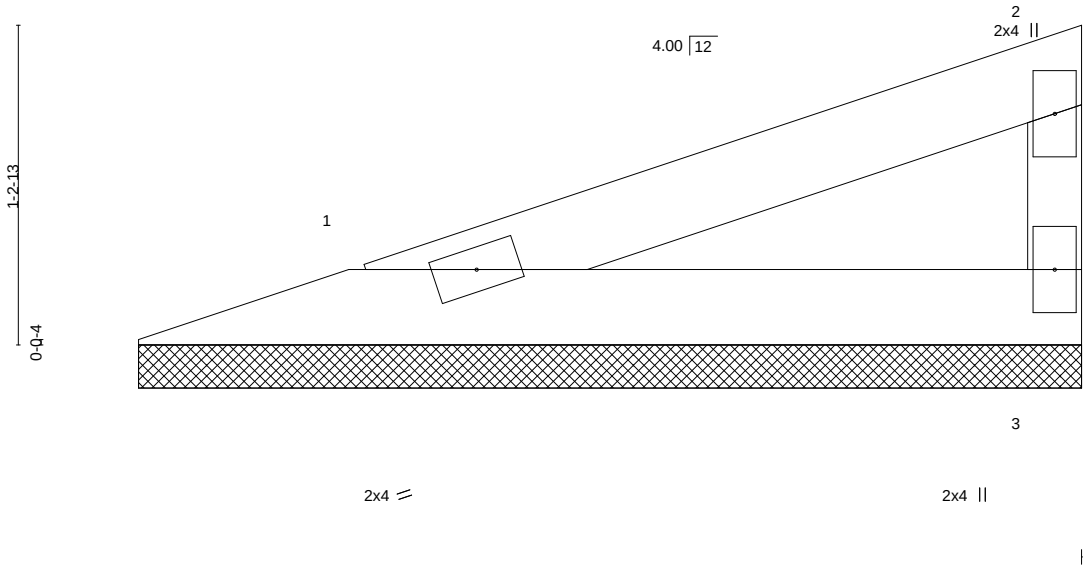

LOADING (psf)		SPACING- 2-0-0		CSI.		DEFL.	in	(loc)	l/defl	L/d	PLATES	GRIP
TCLL	25.0	Plate Grip DOL	1.15	TC	0.12	Vert(LL)	n/a	-	n/a	999	MT20	197/144
TCDL	10.0	Lumber DOL	1.15	BC	0.07	Vert(CT)	n/a	-	n/a	999		
BCLL	0.0 *	Rep Stress Incr	YES	WB	0.00	Horz(CT)	-0.00	3	n/a	n/a		
BCDL	10.0	Code IRC2018/TPI2014		Matrix-P							Weight: 8 lb	FT = 10%

LUMBER-
TOP CHORD 2x4 SPF No.2
BOT CHORD 2x4 SPF No.2
WEBS 2x3 SPF No.2

BRACING-
TOP CHORD Structural wood sheathing directly applied or 3-8-8 oc purlins, except end verticals.
BOT CHORD Rigid ceiling directly applied or 10-0-0 oc bracing.

REACTIONS. (size) 1=3-7-12, 3=3-7-12
Max Horz 1=40(LC 5)
Max Uplift 1=-19(LC 4), 3=-26(LC 8)
Max Grav 1=120(LC 1), 3=120(LC 1)

FORCES. (lb) - Max. Comp./Max. Ten. - All forces 250 (lb) or less except when shown.

NOTES-
1) Wind: ASCE 7-16; Vult=115mph (3-second gust) Vasd=91mph; TCDL=6.0psf; BCDL=6.0psf; h=25ft; Cat. II; Exp C; Enclosed; MWFRS (envelope) gable end zone; cantilever left and right exposed ; end vertical left and right exposed; Lumber DOL=1.60 plate grip DOL=1.60
2) Gable requires continuous bottom chord bearing.
3) This truss has been designed for a 10.0 psf bottom chord live load nonconcurrent with any other live loads.
4) * This truss has been designed for a live load of 20.0psf on the bottom chord in all areas where a rectangle 3-6-0 tall by 2-0-0 wide will fit between the bottom chord and any other members.
5) Provide mechanical connection (by others) of truss to bearing plate capable of withstanding 100 lb uplift at joint(s) 1, 3.
6) This truss is designed in accordance with the 2018 International Residential Code sections R502.11.1 and R802.10.2 and referenced standard ANSI/TPI 1.

March 5,2021

MiTek
16023 Swingley Ridge Rd
Chesterfield, MO 63017

Job	Truss	Truss Type	Qty	Ply	Lot 64 W2
210319	V2	Valley	1	1	I45078982 Job Reference (optional)

Wheeler Lumber, Waverly, KS - 66871, 8.430 s Feb 12 2021 MiTek Industries, Inc. Fri Mar 5 13:51:03 2021 Page 1
ID:pq50?Ycap6WpLXoTu4wfY2za1nE-M?NtkRNplwGLXzxbthZzJLkMlyu9BWgjSp?uC4zdyLM

3-10-8
3-10-8

Scale = 1:12.5

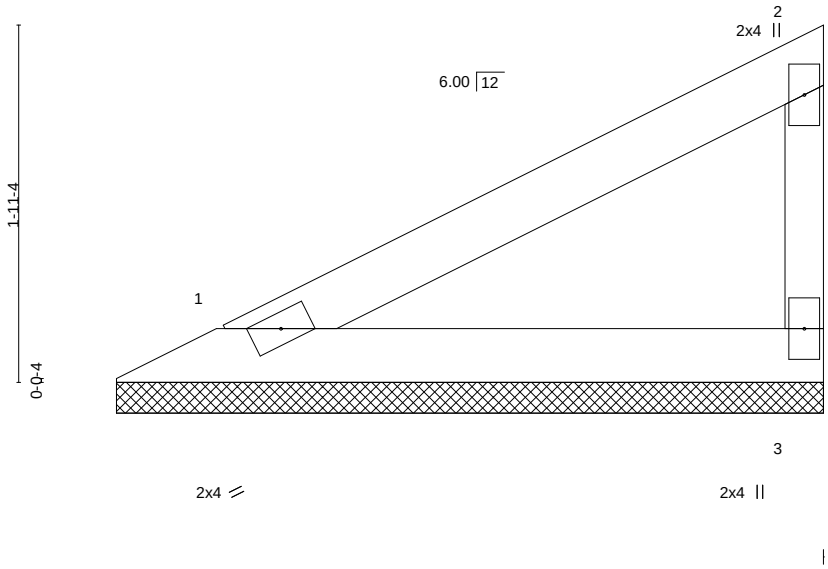

LOADING (psf)		SPACING-	2-0-0	CSI.		DEFL.	in	(loc)	l/defl	L/d	PLATES	GRIP
TCLL	25.0	Plate Grip DOL	1.15	TC	0.18	Vert(LL)	n/a	-	n/a	999	MT20	197/144
TCDL	10.0	Lumber DOL	1.15	BC	0.10	Vert(CT)	n/a	-	n/a	999		
BCLL	0.0 *	Rep Stress Incr	YES	WB	0.00	Horz(CT)	-0.00	3	n/a	n/a		
BCDL	10.0	Code IRC2018/TPI2014		Matrix-P							Weight: 10 lb	FT = 10%

LUMBER-
TOP CHORD 2x4 SPF No.2
BOT CHORD 2x4 SPF No.2
WEBS 2x3 SPF No.2

BRACING-
TOP CHORD Structural wood sheathing directly applied or 3-10-8 oc purlins, except end verticals.
BOT CHORD Rigid ceiling directly applied or 10-0-0 oc bracing.

REACTIONS. (size) 1=3-10-0, 3=3-10-0
Max Horz 1=66(LC 5)
Max Uplift 1=-18(LC 8), 3=-35(LC 8)
Max Grav 1=141(LC 1), 3=141(LC 1)

FORCES. (lb) - Max. Comp./Max. Ten. - All forces 250 (lb) or less except when shown.

NOTES-
1) Wind: ASCE 7-16; Vult=115mph (3-second gust) Vasd=91mph; TCDL=6.0psf; BCDL=6.0psf; h=25ft; Cat. II; Exp C; Enclosed; MWFRS (envelope) gable end zone; cantilever left and right exposed ; end vertical left and right exposed; Lumber DOL=1.60 plate grip DOL=1.60
2) Gable requires continuous bottom chord bearing.
3) This truss has been designed for a 10.0 psf bottom chord live load nonconcurrent with any other live loads.
4) * This truss has been designed for a live load of 20.0psf on the bottom chord in all areas where a rectangle 3-6-0 tall by 2-0-0 wide will fit between the bottom chord and any other members.
5) Provide mechanical connection (by others) of truss to bearing plate capable of withstanding 100 lb uplift at joint(s) 1, 3.
6) This truss is designed in accordance with the 2018 International Residential Code sections R502.11.1 and R802.10.2 and referenced standard ANSI/TPI 1.

STATE OF MISSOURI
JUAN GARCIA
NUMBER E-2000162101
PROFESSIONAL ENGINEER

JUAN GARCIA
LICENSED
16952
KANSAS
PROFESSIONAL ENGINEER

March 5,2021

MiTek
16023 Swingley Ridge Rd
Chesterfield, MO 63017

Job	Truss	Truss Type	Qty	Ply	Lot 64 W2
210319	V3	Valley	1	1	I45078983 Job Reference (optional)

Wheeler Lumber, Waverly, KS - 66871, 8.430 s Feb 12 2021 MiTek Industries, Inc. Fri Mar 5 13:51:04 2021 Page 1
ID:pq50?Ycap6WpLXoTu4wfY2za1nE-qBxGynNRWEOC87VnRP4CsYHY2MFEwzwthTlRkXzdyLL

2-10-8
2-10-8

Scale = 1:10.0

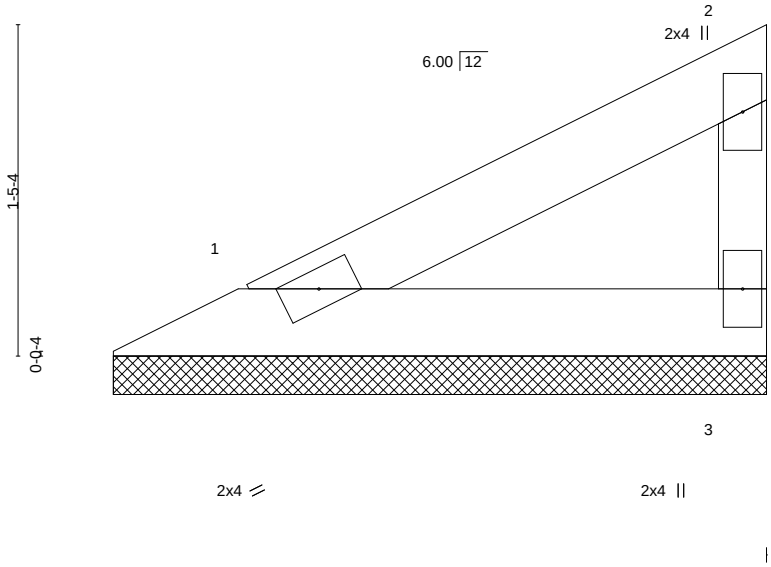

LOADING (psf)		SPACING-	2-0-0	CSI.		DEFL.	in	(loc)	l/defl	L/d	PLATES	GRIP
TCLL	25.0	Plate Grip DOL	1.15	TC	0.08	Vert(LL)	n/a	-	n/a	999	MT20	197/144
TCDL	10.0	Lumber DOL	1.15	BC	0.04	Vert(CT)	n/a	-	n/a	999		
BCLL	0.0 *	Rep Stress Incr	YES	WB	0.00	Horz(CT)	-0.00	3	n/a	n/a		
BCDL	10.0	Code IRC2018/TPI2014		Matrix-P							Weight: 7 lb	FT = 10%

LUMBER-
TOP CHORD 2x4 SPF No.2
BOT CHORD 2x4 SPF No.2
WEBS 2x3 SPF No.2

BRACING-
TOP CHORD Structural wood sheathing directly applied or 2-10-8 oc purlins, except end verticals.
BOT CHORD Rigid ceiling directly applied or 10-0-0 oc bracing.

REACTIONS. (size) 1=2-10-0, 3=2-10-0
Max Horz 1=45(LC 5)
Max Uplift 1=-12(LC 8), 3=-24(LC 8)
Max Grav 1=96(LC 1), 3=96(LC 1)

FORCES. (lb) - Max. Comp./Max. Ten. - All forces 250 (lb) or less except when shown.

NOTES-
1) Wind: ASCE 7-16; Vult=115mph (3-second gust) Vasd=91mph; TCDL=6.0psf; BCDL=6.0psf; h=25ft; Cat. II; Exp C; Enclosed; MWFRS (envelope) gable end zone; cantilever left and right exposed ; end vertical left and right exposed; Lumber DOL=1.60 plate grip DOL=1.60
2) Gable requires continuous bottom chord bearing.
3) This truss has been designed for a 10.0 psf bottom chord live load nonconcurrent with any other live loads.
4) * This truss has been designed for a live load of 20.0psf on the bottom chord in all areas where a rectangle 3-6-0 tall by 2-0-0 wide will fit between the bottom chord and any other members.
5) Provide mechanical connection (by others) of truss to bearing plate capable of withstanding 100 lb uplift at joint(s) 1, 3.
6) This truss is designed in accordance with the 2018 International Residential Code sections R502.11.1 and R802.10.2 and referenced standard ANSI/TPI 1.

March 5,2021

MiTek
16023 Swingley Ridge Rd
Chesterfield, MO 63017

Job	Truss	Truss Type	Qty	Ply	Lot 64 W2
210319	V4	Valley	1	1	I45078984 Job Reference (optional)

Wheeler Lumber, Waverly, KS - 66871, 8.430 s Feb 12 2021 MiTek Industries, Inc. Fri Mar 5 13:51:06 2021 Page 1
ID:pq50?Ycap6WpLXoTu4wfY2za1nE-ma30NTPh2revORfAYq6gxzMrP9utOsiA8mEYpPzdyLJ

12-1-8 | 21-4-8
12-1-8 | 9-3-0

Scale = 1:37.5

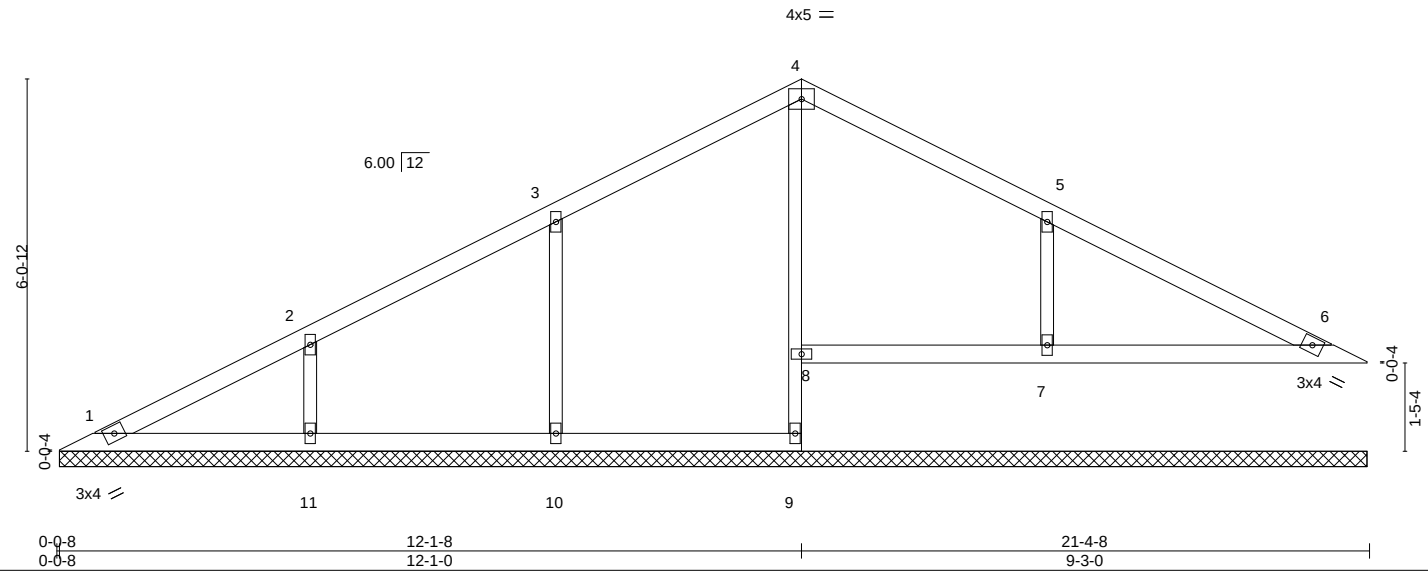

LOADING (psf)		SPACING-	2-0-0	CSI.		DEFL.	in	(loc)	l/defl	L/d	PLATES	GRIP
TCLL	25.0	Plate Grip DOL	1.15	TC	0.28	Vert(LL)	n/a	-	n/a	999	MT20	197/144
TCDL	10.0	Lumber DOL	1.15	BC	0.16	Vert(CT)	n/a	-	n/a	999		
BCLL	0.0 *	Rep Stress Incr	YES	WB	0.11	Horz(CT)	0.00	6	n/a	n/a		
BCDL	10.0	Code IRC2018/TPI2014		Matrix-S							Weight: 60 lb	FT = 10%

LUMBER-
TOP CHORD 2x4 SPF No.2
BOT CHORD 2x4 SPF No.2 *Except*
4-9: 2x3 SPF No.2
OTHERS 2x3 SPF No.2

BRACING-
TOP CHORD Structural wood sheathing directly applied or 6-0-0 oc purlins.
BOT CHORD Rigid ceiling directly applied or 10-0-0 oc bracing.

REACTIONS. All bearings 21-3-8.
(lb) - Max Horz 1=135(LC 8)
Max Uplift All uplift 100 lb or less at joint(s) 1, 6 except 10=-115(LC 8), 11=-111(LC 8), 7=-139(LC 9)
Max Grav All reactions 250 lb or less at joint(s) 1, 6, 9 except 8=264(LC 18), 10=433(LC 23), 11=375(LC 2), 7=490(LC 24)

FORCES. (lb) - Max. Comp./Max. Ten. - All forces 250 (lb) or less except when shown.
WEBS 3-10=-302/168, 2-11=-282/155, 5-7=-359/195

NOTES-
1) Unbalanced roof live loads have been considered for this design.
2) Wind: ASCE 7-16; Vult=115mph (3-second gust) Vasd=91mph; TCDL=6.0psf; BCDL=6.0psf; h=25ft; Cat. II; Exp C; Enclosed; MWFRS (envelope) gable end zone; cantilever left and right exposed ; end vertical left and right exposed; Lumber DOL=1.60 plate grip DOL=1.60
3) All plates are 2x4 MT20 unless otherwise indicated.
4) Gable requires continuous bottom chord bearing.
5) This truss has been designed for a 10.0 psf bottom chord live load nonconcurrent with any other live loads.
6) * This truss has been designed for a live load of 20.0psf on the bottom chord in all areas where a rectangle 3-6-0 tall by 2-0-0 wide will fit between the bottom chord and any other members, with BCDL = 10.0psf.
7) Bearing at joint(s) 8 considers parallel to grain value using ANSI/TPI 1 angle to grain formula. Building designer should verify capacity of bearing surface.
8) Provide mechanical connection (by others) of truss to bearing plate capable of withstanding 100 lb uplift at joint(s) 1, 6 except (jt=lb) 10=115, 11=111, 7=139.
9) Beveled plate or shim required to provide full bearing surface with truss chord at joint(s) 6, 7.
10) This truss is designed in accordance with the 2018 International Residential Code sections R502.11.1 and R802.10.2 and referenced standard ANSI/TPI 1.

March 5,2021

MiTek
16023 Swingley Ridge Rd
Chesterfield, MO 63017

Job	Truss	Truss Type	Qty	Ply	Lot 64 W2
210319	V5	Valley	1	1	I45078985 Job Reference (optional)

Wheeler Lumber, Waverly, KS - 66871, 8.430 s Feb 12 2021 MiTek Industries, Inc. Fri Mar 5 13:51:08 2021 Page 1
ID:pq50?Ycap6WpLXoTu4wfY2za1nE-iyBmo9QyaSuddkpYgE980OSAGzZfsmOSc4jftIzdyLH

10-1-8 | 19-4-8
10-1-8 | 9-3-0

Scale = 1:34.6

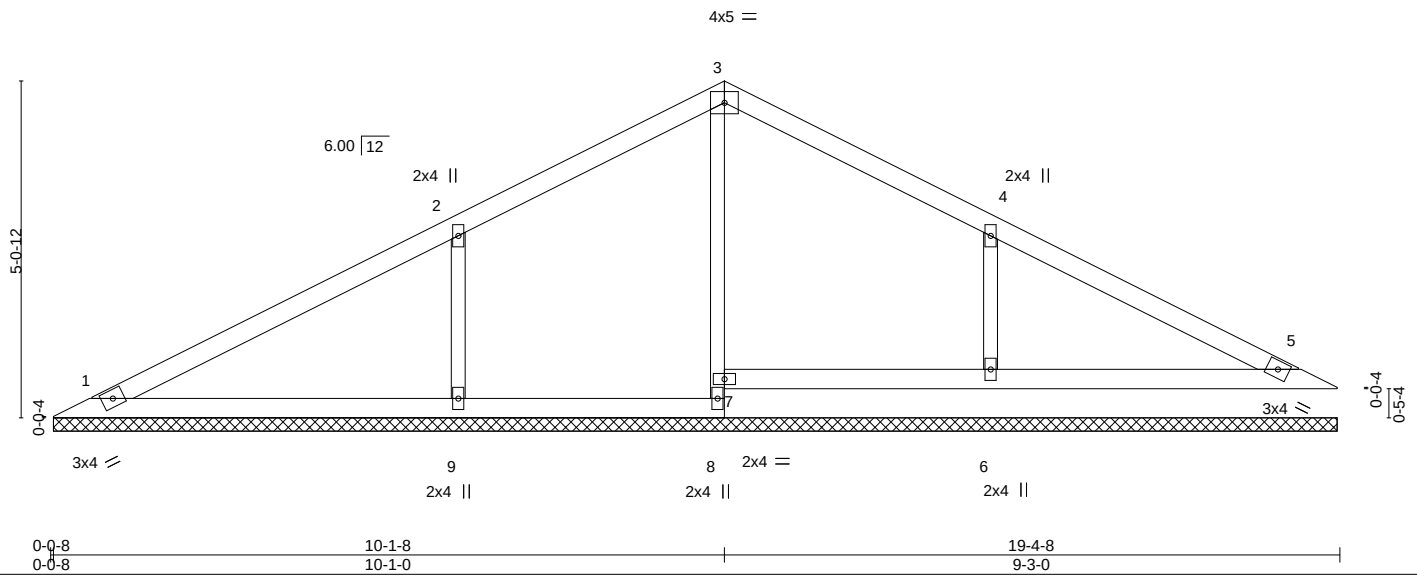

LOADING (psf)		SPACING-	2-0-0	CSI.		DEFL.	in	(loc)	l/defl	L/d	PLATES	GRIP
TCLL	25.0	Plate Grip DOL	1.15	TC	0.38	Vert(LL)	n/a	-	n/a	999	MT20	197/144
TCDL	10.0	Lumber DOL	1.15	BC	0.20	Vert(CT)	n/a	-	n/a	999		
BCLL	0.0 *	Rep Stress Incr	YES	WB	0.10	Horz(CT)	0.00	5	n/a	n/a		
BCDL	10.0	Code IRC2018/TPI2014		Matrix-S							Weight: 52 lb	FT = 10%

LUMBER-
TOP CHORD 2x4 SPF No.2
BOT CHORD 2x4 SPF No.2 *Except*
3-8: 2x3 SPF No.2
OTHERS 2x3 SPF No.2

BRACING-
TOP CHORD Structural wood sheathing directly applied or 6-0-0 oc purlins.
BOT CHORD Rigid ceiling directly applied or 6-0-0 oc bracing, Except:
10-0-0 oc bracing: 7-8.

REACTIONS. All bearings 19-3-8.
(lb) - Max Horz 1=94(LC 8)
Max Uplift All uplift 100 lb or less at joint(s) 1, 5 except 9=-161(LC 8), 6=-139(LC 9)
Max Grav All reactions 250 lb or less at joint(s) 1, 5, 8, 7 except 9=536(LC 21), 6=477(LC 22)

FORCES. (lb) - Max. Comp./Max. Ten. - All forces 250 (lb) or less except when shown.
WEBS 2-9=-405/220, 4-6=-360/196

NOTES-
1) Unbalanced roof live loads have been considered for this design.
2) Wind: ASCE 7-16; Vult=115mph (3-second gust) Vasd=91mph; TCDL=6.0psf; BCDL=6.0psf; h=25ft; Cat. II; Exp C; Enclosed; MWFRS (envelope) gable end zone; cantilever left and right exposed ; end vertical left and right exposed; Lumber DOL=1.60 plate grip DOL=1.60
3) Gable requires continuous bottom chord bearing.
4) This truss has been designed for a 10.0 psf bottom chord live load nonconcurrent with any other live loads.
5) * This truss has been designed for a live load of 20.0psf on the bottom chord in all areas where a rectangle 3-6-0 tall by 2-0-0 wide will fit between the bottom chord and any other members.
6) Bearing at joint(s) 7 considers parallel to grain value using ANSI/TPI 1 angle to grain formula. Building designer should verify capacity of bearing surface.
7) Provide mechanical connection (by others) of truss to bearing plate capable of withstanding 100 lb uplift at joint(s) 1, 5 except (jt=lb) 9=161, 6=139.
8) Beveled plate or shim required to provide full bearing surface with truss chord at joint(s) 5, 6.
9) This truss is designed in accordance with the 2018 International Residential Code sections R502.11.1 and R802.10.2 and referenced standard ANSI/TPI 1.

STATE OF MISSOURI
JUAN GARCIA
NUMBER E-2000162101
PROFESSIONAL ENGINEER

JUAN GARCIA
LICENSED
16952
KANSAS
PROFESSIONAL ENGINEER

March 5,2021

MiTek
16023 Swingley Ridge Rd
Chesterfield, MO 63017

Job	Truss	Truss Type	Qty	Ply	Lot 64 W2
210319	V6	Valley	1	1	I45078986
					Job Reference (optional)

Wheeler Lumber, Waverly, KS - 66871, 8.430 s Feb 12 2021 MiTek Industries, Inc. Fri Mar 5 13:51:08 2021 Page 1
ID:pq50?Ycap6WpLXoTu4wfY2za1nE-iyBmo9QyaSuddkpYgE980OSCAzbKsmgSc4jftIzdyLH

8-1-8 | 16-3-0
8-1-8 | 8-1-8

Scale = 1:27.6

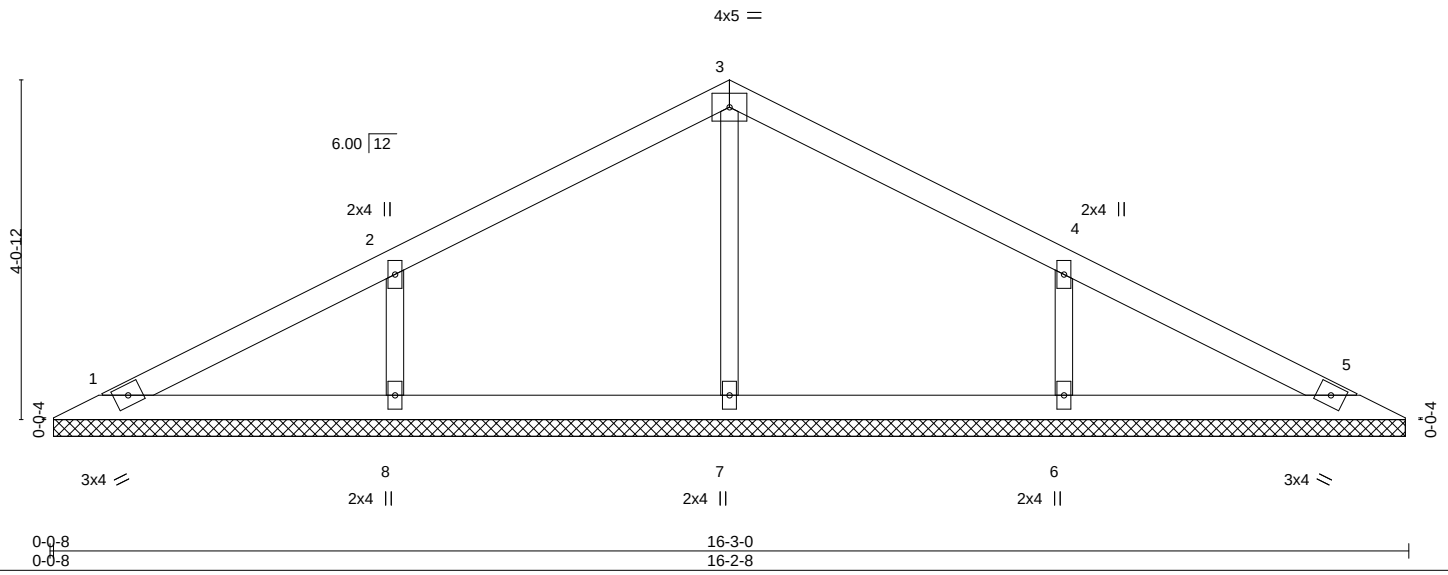

LOADING (psf)		SPACING-	2-0-0	CSI.		DEFL.	in	(loc)	l/defl	L/d	PLATES	GRIP
TCLL	25.0	Plate Grip DOL	1.15	TC	0.20	Vert(LL)	n/a	-	n/a	999	MT20	197/144
TCDL	10.0	Lumber DOL	1.15	BC	0.10	Vert(CT)	n/a	-	n/a	999		
BCLL	0.0 *	Rep Stress Incr	YES	WB	0.08	Horz(CT)	0.00	5	n/a	n/a		
BCDL	10.0	Code IRC2018/TPI2014		Matrix-S							Weight: 43 lb	FT = 10%

LUMBER-
TOP CHORD 2x4 SPF No.2
BOT CHORD 2x4 SPF No.2
OTHERS 2x3 SPF No.2

BRACING-
TOP CHORD Structural wood sheathing directly applied or 6-0-0 oc purlins.
BOT CHORD Rigid ceiling directly applied or 10-0-0 oc bracing.

REACTIONS. All bearings 16-2-0.
(lb) - Max Horz 1=-66(LC 13)
Max Uplift All uplift 100 lb or less at joint(s) 1, 5 except 8=-125(LC 8), 6=-125(LC 9)
Max Grav All reactions 250 lb or less at joint(s) 1, 5 except 7=293(LC 1), 8=401(LC 21), 6=401(LC 22)

FORCES. (lb) - Max. Comp./Max. Ten. - All forces 250 (lb) or less except when shown.
WEBS 2-8=-312/170, 4-6=-312/170

NOTES-
1) Unbalanced roof live loads have been considered for this design.
2) Wind: ASCE 7-16; Vult=115mph (3-second gust) Vasd=91mph; TCDL=6.0psf; BCDL=6.0psf; h=25ft; Cat. II; Exp C; Enclosed; MWFRS (envelope) gable end zone; cantilever left and right exposed ; end vertical left and right exposed; Lumber DOL=1.60 plate grip DOL=1.60
3) Gable requires continuous bottom chord bearing.
4) This truss has been designed for a 10.0 psf bottom chord live load nonconcurrent with any other live loads.
5) * This truss has been designed for a live load of 20.0psf on the bottom chord in all areas where a rectangle 3-6-0 tall by 2-0-0 wide will fit between the bottom chord and any other members.
6) Provide mechanical connection (by others) of truss to bearing plate capable of withstanding 100 lb uplift at joint(s) 1, 5 except (jt=lb) 8=125, 6=125.
7) This truss is designed in accordance with the 2018 International Residential Code sections R502.11.1 and R802.10.2 and referenced standard ANSI/TPI 1.

STATE OF MISSOURI
JUAN GARCIA
NUMBER E-2000162101
PROFESSIONAL ENGINEER

JUAN GARCIA
LICENSED
16952
KANSAS
PROFESSIONAL ENGINEER

March 5,2021

MiTek
16023 Swingley Ridge Rd
Chesterfield, MO 63017

Job	Truss	Truss Type	Qty	Ply	Lot 64 W2
210319	V7	Valley	1	1	I45078987 Job Reference (optional)

Wheeler Lumber, Waverly, KS - 66871, 8.430 s Feb 12 2021 MiTek Industries, Inc. Fri Mar 5 13:51:09 2021 Page 1
ID:pq50?Ycap6WpLXoTu4wfY2za1nE-A9l9?VRaKm0UFuOlDygNZc_KGNv6bDpcrkSCPkzdyLG

6-1-8 / 6-1-8 | 12-3-0 / 6-1-8

Scale = 1:20.8

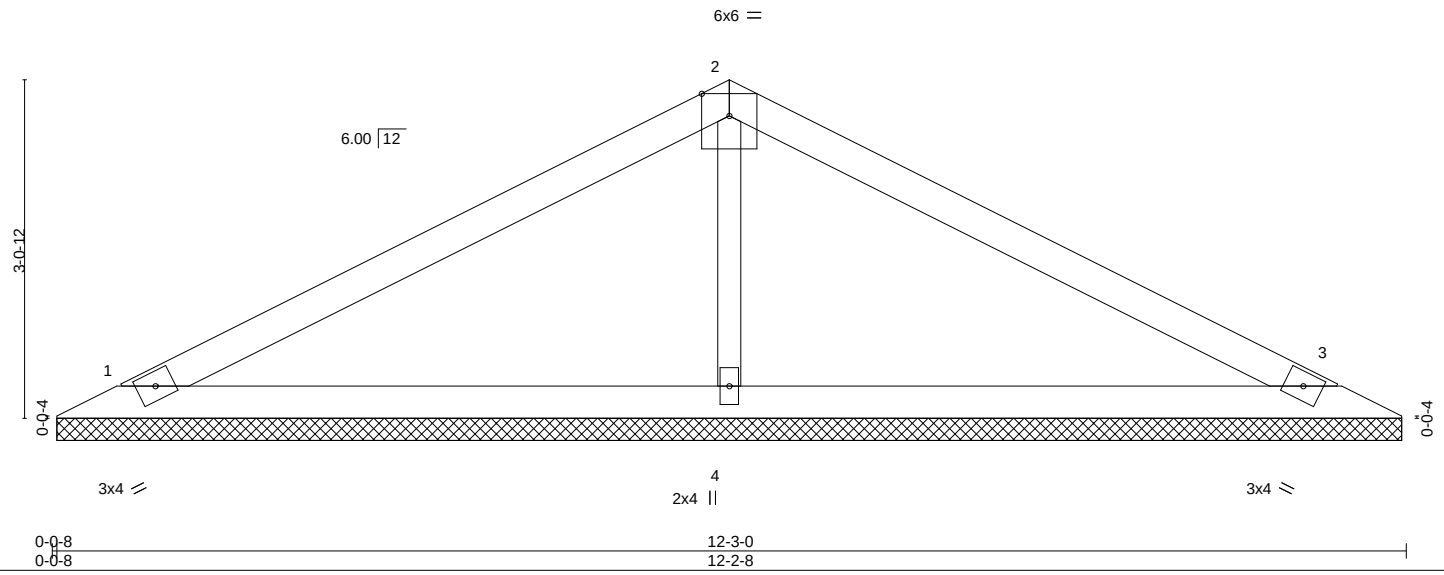

LOADING (psf)		SPACING- 2-0-0		CSI.		DEFL. in (loc) l/defl L/d		PLATES	GRIP
TCLL	25.0	Plate Grip DOL	1.15	TC	0.43	Vert(LL) n/a - n/a 999		MT20	197/144
TCDL	10.0	Lumber DOL	1.15	BC	0.25	Vert(CT) n/a - n/a 999			
BCLL	0.0 *	Rep Stress Incr	YES	WB	0.09	Horz(CT) 0.00 3 n/a n/a			
BCDL	10.0	Code IRC2018/TPI2014		Matrix-S				Weight: 30 lb	FT = 10%

LUMBER-
TOP CHORD 2x4 SPF No.2
BOT CHORD 2x4 SPF No.2
OTHERS 2x3 SPF No.2

BRACING-
TOP CHORD Structural wood sheathing directly applied or 6-0-0 oc purlins.
BOT CHORD Rigid ceiling directly applied or 10-0-0 oc bracing.

REACTIONS. (size) 1=12-2-0, 3=12-2-0, 4=12-2-0
Max Horz 1=49(LC 12)
Max Uplift 1=-47(LC 8), 3=-56(LC 9), 4=-29(LC 8)
Max Grav 1=233(LC 21), 3=233(LC 22), 4=525(LC 1)

FORCES. (lb) - Max. Comp./Max. Ten. - All forces 250 (lb) or less except when shown.
WEBS 2-4=-359/94

NOTES-
1) Unbalanced roof live loads have been considered for this design.
2) Wind: ASCE 7-16; Vult=115mph (3-second gust) Vasd=91mph; TCDL=6.0psf; BCDL=6.0psf; h=25ft; Cat. II; Exp C; Enclosed; MWFRS (envelope) gable end zone; cantilever left and right exposed ; end vertical left and right exposed; Lumber DOL=1.60 plate grip DOL=1.60
3) Gable requires continuous bottom chord bearing.
4) This truss has been designed for a 10.0 psf bottom chord live load nonconcurrent with any other live loads.
5) * This truss has been designed for a live load of 20.0psf on the bottom chord in all areas where a rectangle 3-6-0 tall by 2-0-0 wide will fit between the bottom chord and any other members.
6) Provide mechanical connection (by others) of truss to bearing plate capable of withstanding 100 lb uplift at joint(s) 1, 3, 4.
7) This truss is designed in accordance with the 2018 International Residential Code sections R502.11.1 and R802.10.2 and referenced standard ANSI/TPI 1.

STATE OF MISSOURI
JUAN GARCIA
NUMBER E-2000162101
PROFESSIONAL ENGINEER

JUAN GARCIA
LICENSED
16952
KANSAS
PROFESSIONAL ENGINEER

March 5,2021

MiTek
16023 Swingley Ridge Rd
Chesterfield, MO 63017

Job	Truss	Truss Type	Qty	Ply	Lot 64 W2
210319	V8	Valley	1	1	I45078988 Job Reference (optional)

Wheeler Lumber, Waverly, KS - 66871, 8.430 s Feb 12 2021 MiTek Industries, Inc. Fri Mar 5 13:51:10 2021 Page 1
ID:pq50?Ycap6WpLXoTu4wfY2za1nE-fLIXCrSC548Ls2zxnfBc6pXXGmHgKhnl3OClyAzdyLF

4-1-8 | 8-3-0
4-1-8 | 4-1-8

Scale = 1:15.5

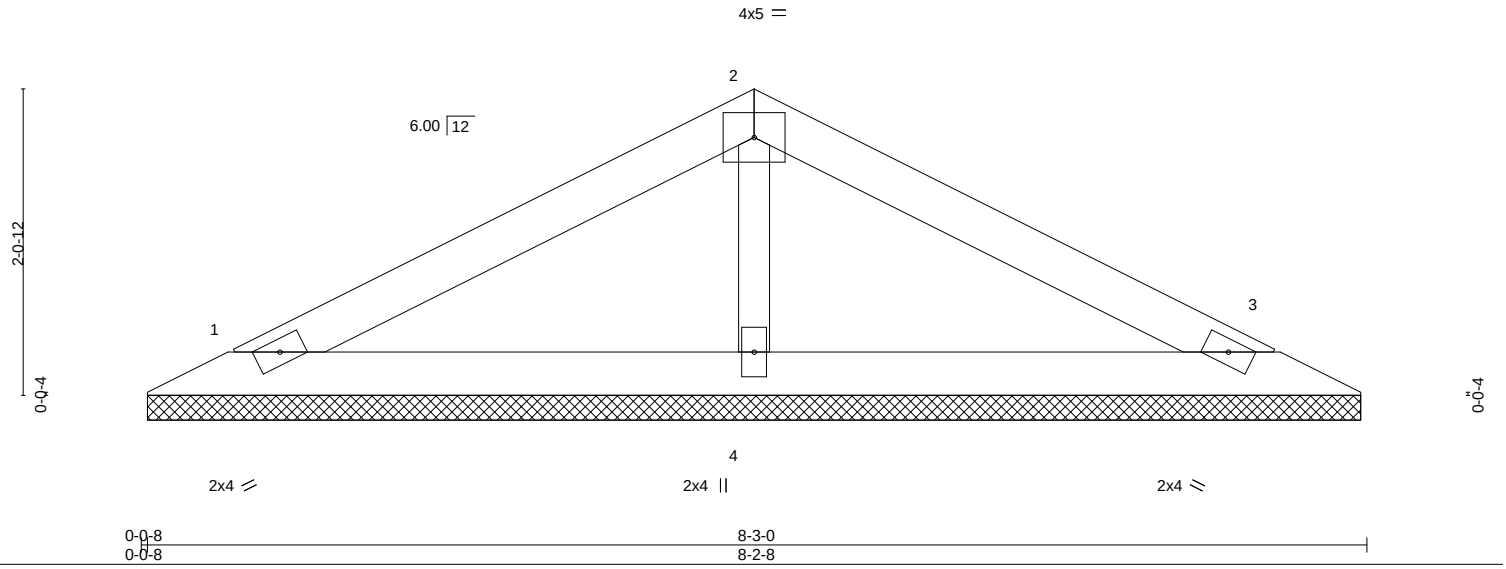

LOADING (psf)		SPACING- 2-0-0		CSI.		DEFL. in (loc) l/defl L/d		PLATES GRIP
TCLL	25.0	Plate Grip DOL	1.15	TC	0.22	Vert(LL) n/a - n/a 999		MT20 197/144
TCDL	10.0	Lumber DOL	1.15	BC	0.10	Vert(CT) n/a - n/a 999		
BCLL	0.0 *	Rep Stress Incr	YES	WB	0.04	Horz(CT) 0.00 3 n/a n/a		
BCDL	10.0	Code IRC2018/TPI2014		Matrix-P				Weight: 19 lb FT = 10%

LUMBER-
TOP CHORD 2x4 SPF No.2
BOT CHORD 2x4 SPF No.2
OTHERS 2x3 SPF No.2

BRACING-
TOP CHORD Structural wood sheathing directly applied or 6-0-0 oc purlins.
BOT CHORD Rigid ceiling directly applied or 10-0-0 oc bracing.

REACTIONS. (size) 1=8-2-0, 3=8-2-0, 4=8-2-0
Max Horz 1=-31(LC 13)
Max Uplift 1=-38(LC 8), 3=-43(LC 9), 4=-4(LC 8)
Max Grav 1=164(LC 1), 3=164(LC 1), 4=301(LC 1)

FORCES. (lb) - Max. Comp./Max. Ten. - All forces 250 (lb) or less except when shown.

NOTES-
1) Unbalanced roof live loads have been considered for this design.
2) Wind: ASCE 7-16; Vult=115mph (3-second gust) Vasd=91mph; TCDL=6.0psf; BCDL=6.0psf; h=25ft; Cat. II; Exp C; Enclosed; MWFRS (envelope) gable end zone; cantilever left and right exposed ; end vertical left and right exposed; Lumber DOL=1.60 plate grip DOL=1.60
3) Gable requires continuous bottom chord bearing.
4) This truss has been designed for a 10.0 psf bottom chord live load nonconcurrent with any other live loads.
5) * This truss has been designed for a live load of 20.0psf on the bottom chord in all areas where a rectangle 3-6-0 tall by 2-0-0 wide will fit between the bottom chord and any other members.
6) Provide mechanical connection (by others) of truss to bearing plate capable of withstanding 100 lb uplift at joint(s) 1, 3, 4.
7) This truss is designed in accordance with the 2018 International Residential Code sections R502.11.1 and R802.10.2 and referenced standard ANSI/TPI 1.

March 5,2021

MiTek
16023 Swingley Ridge Rd
Chesterfield, MO 63017

Job	Truss	Truss Type	Qty	Ply	Lot 64 W2
210319	V9	Valley	1	1	I45078989 Job Reference (optional)

Wheeler Lumber, Waverly, KS - 66871, 8.430 s Feb 12 2021 MiTek Industries, Inc. Fri Mar 5 13:51:13 2021 Page 1
ID:pq50?Ycap6WpLXoTu4wfY2za1nE-3w_frsU4O?WwjWhWSolJjS95Q_IZX29BlMQQYVzdyLC

Scale: 1.5"=1'

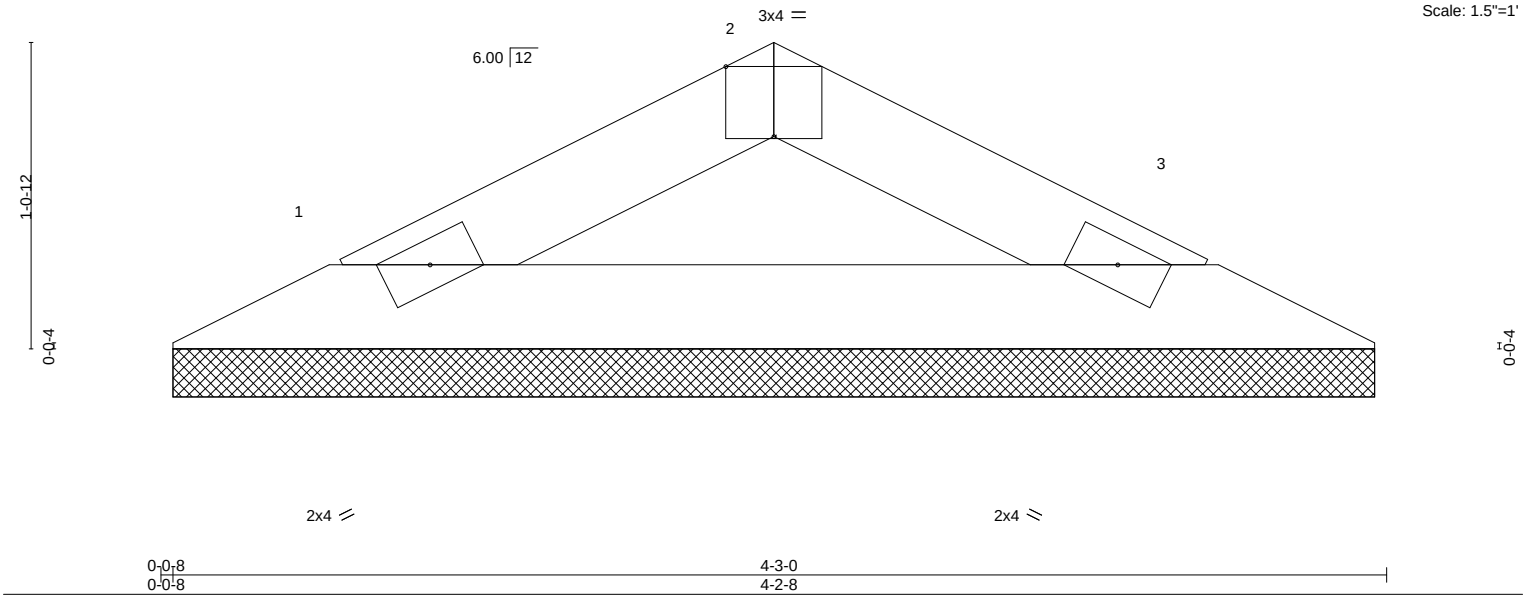

Plate Offsets (X,Y)-- [2:0-2-0,Edge]

LOADING (psf)		SPACING- 2-0-0		CSI.		DEFL. in (loc) l/defl L/d		PLATES GRIP
TCLL	25.0	Plate Grip DOL	1.15	TC	0.04	Vert(LL) n/a - n/a 999		MT20 197/144
TCDL	10.0	Lumber DOL	1.15	BC	0.09	Vert(CT) n/a - n/a 999		
BCLL	0.0 *	Rep Stress Incr	YES	WB	0.00	Horz(CT) 0.00 3 n/a n/a		
BCDL	10.0	Code IRC2018/TPI2014		Matrix-P				Weight: 9 lb FT = 10%

LUMBER-
TOP CHORD 2x4 SPF No.2
BOT CHORD 2x4 SPF No.2

BRACING-
TOP CHORD Structural wood sheathing directly applied or 4-3-0 oc purlins.
BOT CHORD Rigid ceiling directly applied or 10-0-0 oc bracing.

REACTIONS. (size) 1=4-2-0, 3=4-2-0
Max Horz 1=13(LC 12)
Max Uplift 1=-17(LC 8), 3=-17(LC 9)
Max Grav 1=135(LC 1), 3=135(LC 1)

FORCES. (lb) - Max. Comp./Max. Ten. - All forces 250 (lb) or less except when shown.

NOTES-
1) Unbalanced roof live loads have been considered for this design.
2) Wind: ASCE 7-16; Vult=115mph (3-second gust) Vasd=91mph; TCDL=6.0psf; BCDL=6.0psf; h=25ft; Cat. II; Exp C; Enclosed; MWFRS (envelope) gable end zone; cantilever left and right exposed ; end vertical left and right exposed; Lumber DOL=1.60 plate grip DOL=1.60
3) Gable requires continuous bottom chord bearing.
4) This truss has been designed for a 10.0 psf bottom chord live load nonconcurrent with any other live loads.
5) * This truss has been designed for a live load of 20.0psf on the bottom chord in all areas where a rectangle 3-6-0 tall by 2-0-0 wide will fit between the bottom chord and any other members.
6) Provide mechanical connection (by others) of truss to bearing plate capable of withstanding 100 lb uplift at joint(s) 1, 3.
7) This truss is designed in accordance with the 2018 International Residential Code sections R502.11.1 and R802.10.2 and referenced standard ANSI/TPI 1.

STATE OF MISSOURI
JUAN GARCIA
NUMBER E-2000162101
PROFESSIONAL ENGINEER

JUAN GARCIA
LICENSED
16952
KANSAS
PROFESSIONAL ENGINEER

March 5,2021

MiTek
16023 Swingley Ridge Rd
Chesterfield, MO 63017

Symbols

PLATE LOCATION AND ORIENTATION

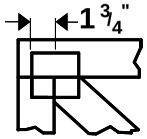

Center plate on joint unless x, y offsets are indicated. Dimensions are in ft-in-sixteenths. Apply plates to both sides of truss and fully embed teeth.

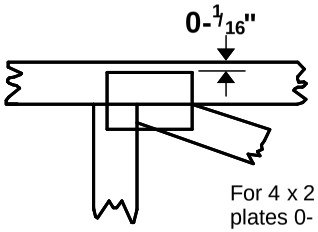

For 4 x 2 orientation, locate plates 0- 1/16" from outside edge of truss.

This symbol indicates the required direction of slots in connector plates.

*** Plate location details available in MiTek 20/20 software or upon request.**

PLATE SIZE

4 x 4

The first dimension is the plate width measured perpendicular to slots. Second dimension is the length parallel to slots.

LATERAL BRACING LOCATION

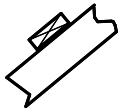

Indicated by symbol shown and/or by text in the bracing section of the output. Use T or I bracing if indicated.

BEARING

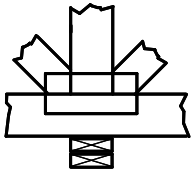

Indicates location where bearings (supports) occur. Icons vary but reaction section indicates joint number where bearings occur. Min size shown is for crushing only.

Industry Standards:

ANSI/TPI1: National Design Specification for Metal Plate Connected Wood Truss Construction.
DSB-89: Design Standard for Bracing.
BCSI: Building Component Safety Information, Guide to Good Practice for Handling, Installing & Bracing of Metal Plate Connected Wood Trusses.

Numbering System

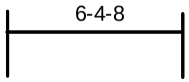

dimensions shown in ft-in-sixteenths
(Drawings not to scale)

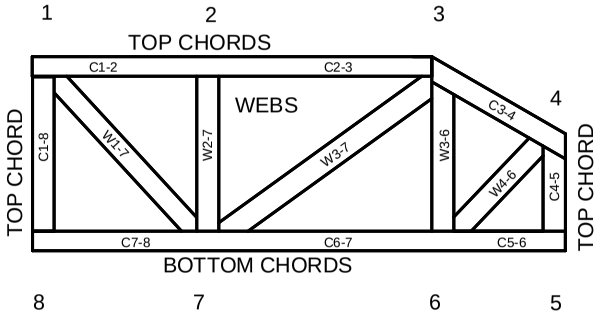

JOINTS ARE GENERALLY NUMBERED/LETTERED CLOCKWISE AROUND THE TRUSS STARTING AT THE JOINT FARTHEST TO THE LEFT.

CHORDS AND WEBS ARE IDENTIFIED BY END JOINT NUMBERS/LETTERS.

PRODUCT CODE APPROVALS

ICC-ES Reports:

ESR-1311, ESR-1352, ESR1988
ER-3907, ESR-2362, ESR-1397, ESR-3282

Trusses are designed for wind loads in the plane of the truss unless otherwise shown.

Lumber design values are in accordance with ANSI/TPI 1 section 6.3 These truss designs rely on lumber values established by others.

MiTek Engineering Reference Sheet: MII-7473 rev. 5/19/2020

General Safety Notes

Failure to Follow Could Cause Property Damage or Personal Injury

1. Additional stability bracing for truss system, e.g. diagonal or X-bracing, is always required. See BCSI.
2. Truss bracing must be designed by an engineer. For wide truss spacing, individual lateral braces themselves may require bracing, or alternative Tor I bracing should be considered.
3. Never exceed the design loading shown and never stack materials on inadequately braced trusses.
4. Provide copies of this truss design to the building designer, erection supervisor, property owner and all other interested parties.
5. Cut members to bear tightly against each other.
6. Place plates on each face of truss at each joint and embed fully. Knots and wane at joint locations are regulated by ANSI/TPI 1.
7. Design assumes trusses will be suitably protected from the environment in accord with ANSI/TPI 1.
8. Unless otherwise noted, moisture content of lumber shall not exceed 19% at time of fabrication.
9. Unless expressly noted, this design is not applicable for use with fire retardant, preservative treated, or green lumber.
10. Camber is a non-structural consideration and is the responsibility of truss fabricator. General practice is to camber for dead load deflection.
11. Plate type, size, orientation and location dimensions indicated are minimum plating requirements.
12. Lumber used shall be of the species and size, and in all respects, equal to or better than that specified.
13. Top chords must be sheathed or purlins provided at spacing indicated on design.
14. Bottom chords require lateral bracing at 10 ft. spacing, or less, if no ceiling is installed, unless otherwise noted.
15. Connections not shown are the responsibility of others.
16. Do not cut or alter truss member or plate without prior approval of an engineer.
17. Install and load vertically unless indicated otherwise.
18. Use of green or treated lumber may pose unacceptable environmental, health or performance risks. Consult with project engineer before use.
19. Review all portions of this design (front, back, words and pictures) before use. Reviewing pictures alone is not sufficient.
20. Design assumes manufacture in accordance with ANSI/TPI 1 Quality Criteria.
21. The design does not take into account any dynamic or other loads other than those expressly stated.