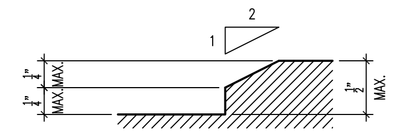

4 BEVELED CHANGE IN ELEVATION
FULL SCALE

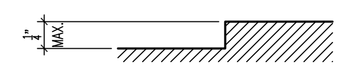

3 VERTICAL CHANGE IN ELEVATION
FULL SCALE

DOOR AND TRIM NOTES:
1. SIGN & TRANSOM INSTALLED AT CORRIDOR SIDE ALL DOORS.
2. DELETE DOOR STOP @ LUXE LOUNGE OPENING.
3. WOOD TRIM SHALL BE SQUARE EDGE CASING – LIGHTLY SANDED OR KNOCKED DOWN.
5. ALL WOOD TRIM SHALL BE PAINT GRADE RED OR WHITE OAK TO MATCH DOOR PANELS.

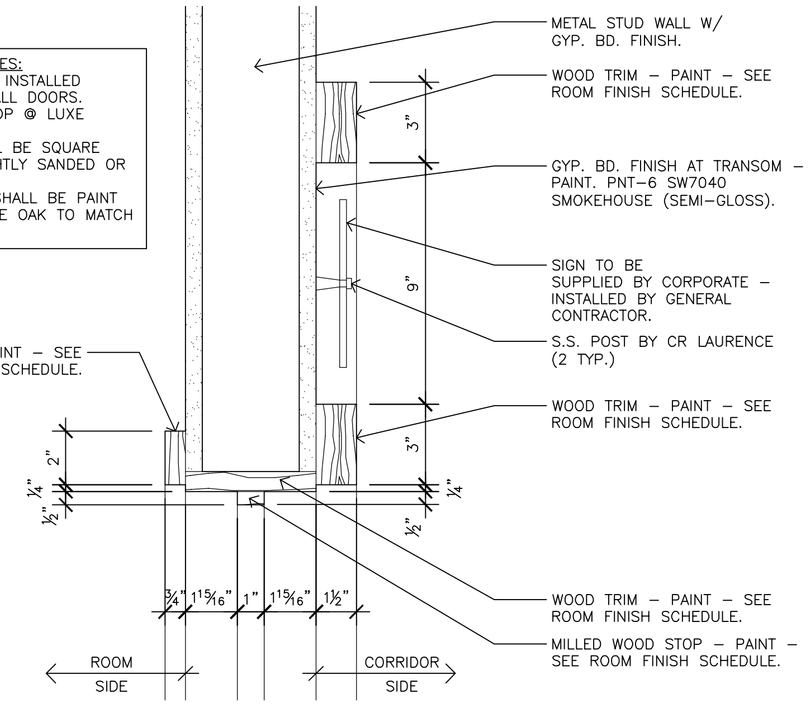

2 HEAD DETAIL @ DOOR
3" = 1'–0"

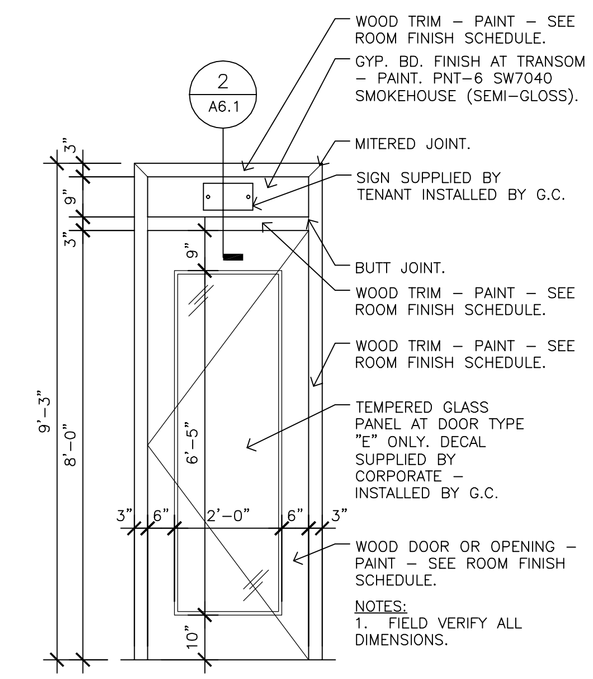

NOTES:
1. FIELD VERIFY ALL DIMENSIONS.

1 DOOR ELEVATION @ CORRIDOR
1/2" = 1'–0"

ROOM FINISH SCHEDULE

ROOM NO	ROOM NAME	FLOOR	BASE	WALLS NORTH	WALLS EAST	WALLS SOUTH	WALLS WEST	CEILING MATL	CEILING HEIGHT	NOTES
101	RECEPTION	TILE 45" TO WALL	TILE 4" BASE	PNT–1	PNT–2	SEE ELEV 13/A4.1	CLT–STN PNT–1 SEE 12/A4.1	GYP. BD. PNT–7	SCS 12'–0" GB 10'–0"	WG–3 EXPANDED VINYL WALL COVERING INSTALLED @ G.B. WALL PORTION BEHIND DESK. INSTALL CULTURED STONE @ WEST WALL BEHIND DESK – SEE ELEVATION. PNT–1 AT WALLS FLANKING STONE, SEE SOFFIT DETAIL FOR PNT–2 AT SOFFIT
102	OFFICE	CARPET	VINYL	PNT–5	PNT–5	PNT–5	PNT–5	ACT	9'–10"	
103	HYDRO LUXE	CARPET	VINYL	PNT–4	PNT–4	PNT–4	PNT–3	ACT	9'–10"	
104	CORRIDOR	CARPET	VINYL	PNT–5	PNT–5	PNT–5	PNT–5	ACT	9'–10"	
105	LUXE LOUNGE	CARPET	VINYL	WC–1	WC–1	WC–1	WC–1	ACT	9'–10"	WG–3 EXPANDED VINYL WALL COVERING INSTALLED @ NORTH WALL ACCENT PANEL
106	MASSAGE 1	CARPET	VINYL	PNT–3	PNT–4	PNT–4	PNT–4	ACT	9'–10"	
107	MASSAGE 2	CARPET	VINYL	PNT–3	PNT–4	PNT–4	PNT–4	ACT	9'–10"	
108	STAFF/WORK AREA	TILE 90" TO WALL	TILE–4"	PNT–5	PNT–5	PNT–5	PNT–5	ACT	9'–10"	
109	WOMENS RESTROOM	TILE 45" TO WALL	TILE 9" BASE	TILE & WC–2, SEE: NOTES				ACT	9'–10"	TILE TO 5'–3" A.F.F. – TERMINATE W/ STAINLESS STEEL SCHLUTER–SCHEIENE STRIP. WC–2 @ 5'–3" A.F.F. TO FINISHED CEILING
110	MENS RESTROOM	TILE 45" TO WALL	TILE 9" BASE	TILE & WC–2, SEE: NOTES				ACT	9'–10"	TILE TO 5'–3" A.F.F. – TERMINATE W/ STAINLESS STEEL SCHLUTER–SCHEIENE STRIP. WC–2 @ 5'–3" A.F.F. TO FINISHED CEILING
111	AESTHETICIAN	TILE 90" TO WALL	TILE–4"	PNT–4	PNT–3	PNT–4	PNT–4	ACT	9'–10"	
112	MASSAGE 3	CARPET	VINYL	PNT–4	PNT–4	PNT–4	PNT–3	ACT	9'–10"	
113	MASSAGE 4	CARPET	VINYL	PNT–4	PNT–4	PNT–4	PNT–3	ACT	9'–10"	
114	MASSAGE 5	CARPET	VINYL	PNT–4	PNT–4	PNT–4	PNT–3	ACT	9'–10"	
115	MASSAGE 6	CARPET	VINYL	PNT–4	PNT–4	PNT–4	PNT–3	ACT	9'–10"	
116	STORAGE	CARPET	VINYL	PNT–5	PNT–5	PNT–5	PNT–5	ACT	9'–10"	
117	MASSAGE 7	CARPET	VINYL	PNT–4	PNT–4	PNT–3	PNT–4	ACT	9'–10"	

FLOOR TILE
MANUFACTURER: AMERICAN OLEAN
PRODUCT: KENDAL SLATE
COLOR: CARLISLE BLACK KS03
SIZE: 18.0 X 18.0
THICKNESS: 5/16"
NOTE: INSTALL 45 DEGREES TO WALL AT RECEPTION AND RESTROOMS –90 DEGRESS TO WALL AT AESTHETICIAN, STAFF AREA AND WORK AREAS.

BASE TILE
MANUFACTURER: AMERICAN OLEAN
PRODUCT: KENDAL SLATE
COLOR: CARLISLE BLACK KS03
SIZE: 4.0 X 18.0
THICKNESS: 5/16"
NOTE: INSTALL SCHLUTER TRIM NOT BULLNOSE.

WALL TILE
MANUFACTURER: AMERICAN OLEAN
PRODUCT: KENDAL SLATE
COLOR: CARLISLE BLACK KS03
SIZE: 18.0 X 18.0
THICKNESS: 5/16"
NOTE: INSTALL 90 DEGRESS TO FLOOR IN STACK BOND PATTERN

TILE – REQUIRED VENDOR:
DETRI ANDERSON
VIRGINIA TILE
(314) 812–5915
www.virginiatile.com

GROUT
CUSTOM BUILDING PRODUCTS
SABLE BROWN #95
RECOMMENDED 3/16" WIDTH

NOTE: ALL TILE STOPS @ TOP OF WALL & TOP OF BASE SHALL RECEIVE THE FOLLOWING: SCHLUTER–SCHEIENE STRIP – STAINLESS STEEL OR BRUSHED ALUMINUM.

CARPET
MANUFACTURER: SHAW
PRODUCT: FEEDBACK
STYLE: 54565
COLOR: 00103
NAME: RECEIVER
SIZE: 24" X 24"
CLASS: CLASS I
NOTE: INSTALL 1/4 TURN

CARPET – REQUIRED VENDOR:
GREG NAVE
PH: (314) 941–6247
PURCHASE DIRECT THROUGH FROM SHAW THROUGH GREG NAVE

~~VCT~~
~~VINYL COMPOSITION TILE~~
~~MANUFACTURER: ARMSTRONG~~
~~PRODUCT: STANDARD EXCELON IMPERIAL TEXTURE~~
~~STYLE: 51942~~
~~NAME: CURRIED CARAMEL~~
~~CLASS: CLASS II~~
~~NOTE: INSTALL 1/4 TURN~~

FLOORING ACCESSORIES:
1. S.S. TERAZZO REDUCER STRIP @ TILE/CPT. TRANSITION.
2. VINYL REDUCER STRIP @ VCT/CPT. & SV/CPT TRANSITION TO MATCH VINYL BASE.

PNT–1 INTERIOR PAINT
MANUFACTURER: SHERWIN WILLIAMS
COLOR: SW6356 COPPER MOUNTAIN
FINISH: EGG SHELL

PNT–2 INTERIOR PAINT
MANUFACTURER: SHERWIN WILLIAMS
COLOR: SW6228 REFUGE
FINISH: EGG SHELL

PNT–3 INTERIOR PAINT
MANUFACTURER: SHERWIN WILLIAMS
COLOR: SW6221 MOODY BLUE
FINISH: EGG SHELL
NOTE: SHERWIN WILLIAMS PROMAR 200 ZERO VOC INTERIOR LATEX PAINT WITH ANTI–MICROBIAL AGENTS

PNT–4 INTERIOR PAINT
MANUFACTURER: SHERWIN WILLIAMS
COLOR: SW6220 INTERESTING AQUA
FINISH: EGG SHELL
NOTE: SHERWIN WILLIAMS PROMAR 200 ZERO VOC INTERIOR LATEX PAINT WITH ANTI–MICROBIAL AGENTS

PNT–5 INTERIOR PAINT
MANUFACTURER: SHERWIN WILLIAMS
COLOR: SW7038 TONY TAUPE
FINISH: EGG SHELL
NOTE: SHERWIN WILLIAMS PROMAR 200 ZERO VOC INTERIOR LATEX PAINT WITH ANTI–MICROBIAL AGENTS

1

PNT–6
MANUFACTURER: SHERWIN WILLIAMS
LOCATION: QUOINS, TRANSOMS AND NICHES
COLOR: SW7040 SMOKEHOUSE
FINISH: SEMI GLOSS

PNT–7 INTERIOR PAINT
MANUFACTURER: SHERWIN WILLIAMS
COLOR: SW6119 ANTIQUE WHITE
FINISH: EGG SHELL

PAINT–8 INTERIOR PAINT
LOCATION: DOORS, TRIM AND CASING
MANUFACTURER: SHERWIN WILLIAMS
COLOR: SW6041 OTTER
FINISH: PRECATALIZED WATER BORN SEMI–GLOSS EPOXY

NOTE: GENERAL CONTRACTOR SHALL PROVIDE A FINISHED DOOR AND TRIM SAMPLE FOR APPROVAL PRIOR TO APPLICATION AND INSTALLATION.

PAINT @ RECEPTION DESK SOFFIT
PNT–7 @ HORIZONTAL SURFACES
PNT–2 @ VERTICAL SURFACES

PAINT @ FEATURE WALL SOFFIT
PNT–7 @ HORIZONTAL SURFACES
PNT–1 @ VERTICAL SURFACES

WC–1 EXPANDED VINYL WALL COVERING
MANUFACTURER: WOLF GORDON
NAME: CAPELLA / ESPRESSO
NUMBER: GOH 12019537
FIRE RATING: CLASS A

WC–2 EXPANDED VINYL WALL COVERING
MANUFACTURER: WOLF GORDON
NAME: ORANGE CUSTOM
NUMBER: WG 09869672

WC–3 EXPANDED VINYL WALL COVERING
MANUFACTURER: WOLF GORDON
NAME: NOCTURNE / AZURE
NUMBER: GOH 11829091

WALL COVERING CONTACT:
ALFREDO ORTIZ
PH: (718) 391–5452

CUSTOM GRAPHIC WALL PAPER
(CONTACT MASSAGE LUXE CORPORATE)
MANUFACTURER:
PRODUCT:
COLOR: CUSTOM GRAPHICS
FIRE RATING: CLASS I (A)

ACT – ACOUSTIC CEILING TILE
MANUFACTURER: ARMSTRONG
PRODUCT: CIRRUS 584, SQUARE LAY–IN, ANGLED TEGULAR, FINE TEXTURE
SIZE: 2'x2'x3/4"
COLOR: WHITE
FIRE CLASS: CLASS A

ACT – SUSPENSION SYSTEM
MANUFACTURER: ARMSTRONG
PRODUCT: PRELUDE XL 15/16" EXPOSED TEE SYSTEM
COLOR: WHITE

V–BASE:
VINYL COVE BASE
REQUIRED VENDOR:
JEN KING
E.J. WELCH COMPANY
(314) 739–7948 #1057
REFERENCE QUOTE #018993

~~WOOD–BASE:~~
~~WOOD WALL BASE~~
~~3/4" x 4" PAINT GRADE RED OR WHITE OAK~~
~~FINISH: WOOD FINISH TO MATCH DOORS AND TRIM THROUGHOUT~~

CLT–STN – CULTURED STONE
MANUFACTURER: BORAL
PRODUCT: PRO–FIT LEDGESTONE
COLOR: SOUTHWEST BLEND, PF–8019

GRANITE COUNTERTOP
PROVIDED AND INSTALLED BY GENERAL CONTRACTOR. SEE 2/A5.1 NICHE DETAIL AND A4.2 CASEWORK DETAILS.

DOOR SCHEDULE

#	DOOR IN OPENING	DOOR WIDTH	DOOR HEIGHT	DOOR TYPE	DOOR MAT.	FRAME MAT.	FRAME FINISH #	HARDWARE LOCKSET	HARDWARE SET #	REMARKS
01	1	3'–0"	7'–0"	A	ALUM	ALUM	1	ENTRANCE	1,7	INSTALL NEW OR EXIST. ADA COMPLIANT EXIT HDW. W/ CLOSER
02	1	3'–0"	7'–0"	D	MTL	MTL	3	ENTRANCE	1,7	INSTALL NEW OR EXIST. ADA COMPLIANT EXIT HDW. W/ CLOSER
03	1	3'–0"	8'–0"	E	WD	WD	4	PASSAGE	4	TEMP. GLASS LITE W/ APPLIED DECAL DESIGN
04	1	3'–0"	8'–0"	E	WD	WD	4	KEYED	5	TEMP. GLASS LITE W/ APPLIED DECAL DESIGN
05	1	3'–0"	8'–0"	B	GLASS	GB	2	–––––	2	W/APPLIED DECAL, 37" FIN. WIDE OPEN'G X 100.5" A.F.F. HEAD R.O.
06	–––	3'–6"	8'–0"	–––	–––	WD	4	–––––	–––	OPENING DETAIL SIMILAR TO 1/A6.1 & 2/A6.1 W/O STOP
07	1	3'–0"	8'–0"	C	WD	WD	4	PASSAGE	4	
08	1	3'–0"	8'–0"	C	WD	WD	4	PASSAGE	4	
09	1	3'–0"	8'–0"	C	WD	WD	4	PASSAGE	4	
10	1	3'–0"	8'–0"	C	WD	WD	4	PRIVACY	6	
11	1	3'–0"	8'–0"	C	WD	WD	4	PRIVACY	6	
12	1	3'–0"	8'–0"	C	WD	WD	4	PASSAGE	4	
13	1	3'–0"	8'–0"	C	WD	WD	4	PASSAGE	4	
14	1	3'–0"	8'–0"	C	WD	WD	4	PASSAGE	4	
15	1	3'–0"	8'–0"	C	WD	WD	4	PASSAGE	4	
16	1	3'–0"	8'–0"	C	WD	WD	4	PASSAGE	4	
17	1	3'–0"	8'–0"	C	WD	WD	4	KEYED	5	
18	1	3'–0"	8'–0"	C	WD	WD	4	PASSAGE	4	

1

DOOR TYPES
A. EXISTING ALUMINUM STOREFRONT STYLE W/ ADA COMPLIANT EXIT HARDWARE.
B. TEMPERED GLASS DOOR – SUPPLIED BY CORPORATE AND INSTALLED BY GENERAL CONTRACTOR. COORDINATE WITH CORPORATE AND TENANT. DECAL SUPPLIED BY CORPORATE – INSTALLED BY GENERAL CONTRACTOR.
C. WOOD DOOR, SOLID CORE, PLAIN SLICED, PAINT GRADE RED OR WHITE OAK; GRADE 'A' BOOKMATCHED. COLOR: SEE ROOM FINISH SCHEDULE.
D. EXISTING METAL DOOR TO REMAIN – PAINT INTERIOR SIDE DOOR – SEE ROOM FINISH SCHEDULE.
E. WOOD DOOR, SOLID CORE, PLAIN SLICED, PAINT GRADE RED OR WHITE OAK; GRADE 'A' BOOKMATCHED. COLOR: SEE ROOM FINISH SCHEDULE. TEMPERED GLASS LITE AND APPLIED LOGO. DOOR WITH CUTOUT SUPPLIED AND INSTALLED BY GENERAL CONTRACTOR. TEMPERED CLASS LITE SUPPLIED & INSTALLED BY GENERAL CONTRACTOR. DECAL SUPPLIED BY CORP. INSTALLED BY G.C.

FRAME FINISHES
1. EXISTING ALUMINUM STOREFRONT STYLE.
2. GYPSUM BOARD RETURN @ JAMB – PAINT SAME COLOR AS ADJACENT RECEPTION WALL.
3. EXISTING METAL FRAME. PAINT INTERIOR SIDE FRAME. SEE ROOM FINISH SCHEDULE.
4. WOOD FRAME – PAINT GRADE RED OR WHITE OAK TO MATCH DOOR – PAINT – SEE ROOM FINISH SCHEDULE AND 1/A6.1 & 2/A6.1.

DOOR HARDWARE/LOCKSET
1. EXISTING HARDWARE TO REMAIN OR NEW ADA AND CODE COMPLIANT HARDWARE INSTALLED BY OTHERS. COORDINATE W/ BUILDING OWNER.
2. ADA COMPLIANT CONCEALED HINGE SYSTEM, ADA COMPLIANT DOOR CLOSER. ALL COMPONENTS TO HAVE 625 BRIGHT CHROME FINISH. ADA COMPLIANT PUSH/PULL HANDLES SUPPLIED BY TENANT. ALL COMPONENTS TO BE INSTALLED BY GENERAL CONTRACTOR. NO LATCH. DOUBLE ACTING DOOR HARDWARE, ADA COMPLIANT PUSH/PULL HANDLE.
3. HINGES (4), SCHLAGE, "MERANO" #F40 MER 626, SATIN CHROME FINISH, LEVER HANDLE, CLASSROOM LOCKSET FUNCTION.
4. HINGES (4), SCHLAGE, "MERANO" #F40 MER 626, SATIN CHROME FINISH, LEVER HANDLE, PASSAGE LOCKSET FUNCTION.
5. HINGES (4), SCHLAGE, "MERANO" #F40 MER 626, SATIN CHROME FINISH, LEVER HANDLE, KEYED ENTRANCE LOCKSET FUNCTION.
6. HINGES (4), SCHLAGE, "MERANO" #F40 MER 626, SATIN CHROME FINISH, LEVER HANDLE, PRIVACY LOCKSET FUNCTION.
7. FIELD VERIFY COMPLIANCE OF EXISTING THRESHOLDS. INSTALL THRESHOLD PER DETAIL 3 OR 4/A6.1 AT DOORS 01 & 03 IF REQUIRED.

ACCESSORIES
1. INSTALL (4) CLEAR DOOR SILENCERS AT ALL DOORS EXCEPT FULL GLASS DOOR.
2. INSTALL #409 CONCAVE WROUGHT WALL STOP BY ROCKWOOD W/ 625 SATIN CHROME FINISH AT DOOR/WALL LOCATIONS AS REQUIRED TO PROTECT WALL FROM DOOR HANDLE.
3. INSTALL COMMERCIAL STYLE STRIKE PLATES W/ 626 SATIN CHROME FINISH.
4. SUPPLY MOUNTING AND ADA COMPLIANT CLOSER HARDWARE FOR RECEPTION GLASS DOOR W/626 SATIN CHROME FINISH.
5. INSTALL HEAVY DUTY BALL HINGES W/ 626 SATIN CHROME FINISH (4 HINGES TYPICAL AT EACH DOOR).

STATE OF MISSOURI
BRADLEY COLLINS PETERSON
NUMBER A-006865
REGISTERED ARCHITECT
02.25.21
SEAL

CERTIFICATE OF AUTHORITY
MISSOURI LIC. #2014008379

BRADLEY COLLINS PETERSON
MISSOURI LIC. #006865

bradleycollins, llc
architecture
131 east drake avenue
st. louis, mo 63119
phone: 314.968.2899 or 314.402.7265
www.bradley-collins.com

ISSUES / REVISIONS :

NO.	DATE	REMARKS
1	03.22.21	CITY OF LEE'S SUMMIT REVIEW

TENANT BUILD OUT
MassageLuXe - Summit at West Pryor
940 NW Pryor Road, Unit: H
Lee's Summit, MO 64081
SCHEDULES

PROJECT NUMBER
20022

PROJECT PHASE
CONTRACT DOCUMENTS

DRAWN BY:
BCP

CHECKED BY:
BCP

DATE:
02.25.2021

SHEET NO.
A6.1