RELEASE FOR CONSTRUCTION
AS NOTED ON PLANS REVIEW
DEVELOPMENT SERVICES
LEE'S SUMMIT, MISSOURI
03/10/2021

# NEW GROUND UP AND DRIVE THRU OF QUICK SERVICE RESTAURANT

1348 - LEE'S SUMMIT

SHAKE SHACK®

2051 NW LOWENSTEIN DRIVE
LEE'S SUMMIT, MISSOURI 64081
SHACK #1348

## PERMIT/BID SET: 2021-01-11

## PERSPECTIVE VIEW

## PROJECT TEAM


**OWNER'S DESIGN PROJECT MANAGER**
SHAKE SHACK
225 VARICK ST, SUITE 301
NEW YORK, NY 10014
CONTACT: THEA WILLIAMSON
T: 347.640.0982

**OWNER'S CONSTRUCTION PROJECT MANAGER**
SHAKE SHACK
225 VARICK ST, SUITE 301
NEW YORK, NY 10014
CONTACT: CHRIS PIPER
T: 646.661.0958

**LANDLORD**
DRAKE DEVELOPMENT
7200 W. 132ND ST., SUITE 150
OVERLAND PARK, KS 66213
CONTACT: IAN MUSSMAN
T: 913.662.2630

**ARCHITECT**
BERGMEYER ASSOCIATES, INC.
51 SLEEPER STREET, 6TH FLOOR
BOSTON, MA 02210
PRINCIPAL IN CHARGE: MIKE DAVIS
PROJECT MANAGER: CHRISTINA SANDORE
T: 617.542.1025

**MEP ENGINEER**
SCHNACKEL ENGINEERS, INC.
3035 SOUTH 72ND STREET
OMAHA, NE 68124
CONTACT: DUSTIN WOLLENBURG
T: 531.329.6292

**STRUCTURAL ENGINEER**
H+O STRUCTURAL ENGINEERING
51 MELCHER ST FLR 1
BOSTON, MA 02210
CONTACT: RENS HAYES
T: 617.938.3349 x 7011

**KITCHEN CONSULTANT**
TRIMARK UNITED EAST FOOD SERVICE DESIGN
505 COLLINS STREET
SOUTH ATTLEBORO, MA 02703
CONTACT: MICHAEL HENDERSON
T: 508.399.2392

**CIVIL ENGINEER**
SW ENGINEERING
5507 HIGH MEADOW CIRCLE
MANHATTAN, KS 66503
CONTACT: SAM MALINOWSKY
T: 785.341.9747

**GENERAL CONTRACTOR**
TBD


## PROJECT NARRATIVE

THIS PROJECT IS NEW CONSTRUCTION, FREE STANDING SINGLE STORY QUICK SERVICE RESTAURANT. THE INTENDED USE GROUP IS A2. NEW STRUCTURAL, CIVIL, MECHANICAL, ELECTRICAL, PLUMBING, AND FIRE PROTECTION COMPONENTS ARE PROPOSED

THE BUILDING WILL BE SPRINKLERED.

| SEAT COUNT | |
|---|---|
| INTERIOR SEATS | 125 |
| EXTERIOR SEATS | 50 |
| TOTAL SEATS | 175 |
| **SQUARE FOOTAGE** | |
| INTERIOR SF | 3360 SF |
| EXTERIOR SF | 1039 SF |
| TOTAL SF | 4399 SF |

## SHEET INDEX AND ISSUE MATRIX

| SHEET NO. | SHEET NAME | PERMIT/BID ISSUE DATE | REVISION NO. | REVISION ISSUE DATE | REVISION DESCRIPTION |
|---|---|---|---|---|---|
| 00 GENERAL | | | | | |
| T001 | TITLE SHEET | 2021-01-11 | 1 | 2021-03-09 | ADDENDUM 1 |
| T002 | RESPONSIBILITY SCHEDULE & VENDOR CONTACTS | 2021-01-11 | | | |
| T003 | SYMBOLS, GENERAL NOTES & ABBREVIATIONS | 2021-01-11 | | | |
| T004 | CODE ANALYSIS, OCCUPANCY & EGRESS | 2021-01-11 | | | |
| 01 CIVIL | | | | | |
| C-1 | SITE PLAN | 2021-01-11 | 1 | 2021-03-09 | ADDENDUM 1 |
| C-2 | UTILITY PLAN | 2021-01-11 | 1 | 2021-03-09 | ADDENDUM 1 |
| C-3 | GRADING PLAN | 2021-01-11 | 1 | 2021-03-09 | ADDENDUM 1 |
| 02 SITE | | | | | |
| AS101 | ARCHITECTURAL SITE PLAN | 2021-01-11 | | | |
| AS102 | ENLARGED PATIO PLAN AND EXTERIOR DETAILS | 2021-01-11 | 1 | 2021-03-09 | ADDENDUM 1 |
| 03 STRUCTURAL | | | | | |
| S000 | ISOMETRIC VIEWS | 2021-01-11 | | | |
| S001 | GENERAL NOTES I | 2021-01-11 | | | |
| S002 | GENERAL NOTES II | 2021-01-11 | | | |
| S003 | LOADING PLANS | 2021-01-11 | | | |
| S100 | FOUNDATION PLAN | 2021-01-11 | | | |
| S101 | CANOPY FRAMING PLAN | 2021-01-11 | | | |
| S102 | ROOF FRAMING PLAN | 2021-01-11 | | | |
| S200 | COLUMN SCHEDULE | 2021-01-11 | | | |
| S201 | BUILDING SECTIONS | 2021-01-11 | | | |
| S300 | LATERAL FRAME ELEVATIONS | 2021-01-11 | | | |
| S400 | CONCRETE DETAILS I | 2021-01-11 | | | |
| S401 | CONCRETE DETAILS II | 2021-01-11 | | | |
| S500 | STEEL DETAILS I | 2021-01-11 | | | |
| S501 | STEEL DETAILS II | 2021-01-11 | | | |
| S502 | STEEL DETAILS III | 2021-01-11 | | | |
| S601 | CMU DETAILS I | 2021-01-11 | | | |
| 04 ARCHITECTURAL | | | | | |
| A100 | CURB & FOUNDATION PLAN | 2021-01-11 | | | |
| A101 | GENERAL ARRANGEMENT PLAN | 2021-01-11 | 1 | 2021-03-09 | ADDENDUM 1 |
| A102 | DIMENSIONED PLAN | 2021-01-11 | | | |
| A103 | FLOOR FINISH PLAN | 2021-01-11 | | | |
| A104 | FURNITURE & EQUIPMENT PLAN | 2021-01-11 | | | |
| A105 | SIGNAGE AND GRAPHICS PLAN | 2021-01-11 | 1 | 2021-03-09 | ADDENDUM 1 |
| A120 | REFLECTED CEILING PLAN | 2021-01-11 | | | |
| A150 | ROOF PLAN | 2021-01-11 | | | |
| A201 | EXTERIOR ELEVATIONS | 2021-01-11 | 1 | 2021-03-09 | ADDENDUM 1 |
| A210 | INTERIOR ELEVATIONS | 2021-01-11 | | | |
| A211 | INTERIOR ELEVATIONS | 2021-01-11 | | | |
| A301 | BUILDING SECTIONS | 2021-01-11 | | | |
| A302 | EXTERIOR WALL SECTIONS | 2021-01-11 | | | |
| A303 | EXTERIOR WALL SECTIONS | 2021-01-11 | | | |
| A304 | EXTERIOR WALL SECTIONS | 2021-01-11 | | | |
| A305 | EXTERIOR WALL SECTIONS | 2021-01-11 | | | |
| A310 | INTERIOR SECTIONS | 2021-01-11 | | | |
| A401 | ENLARGED MANAGER'S OFFICE PLAN | 2021-01-11 | | | |
| A402 | ENLARGED WOMENS RESTROOM PLAN | 2021-01-11 | 1 | 2021-03-09 | ADDENDUM 1 |
| A403 | ENLARGED MENS RESTROOM PLAN | 2021-01-11 | 1 | 2021-03-09 | ADDENDUM 1 |
| A501 | EXTERIOR DETAILS - PLAN | 2021-01-11 | | | |
| A502 | EXTERIOR DETAILS - SECTION | 2021-01-11 | | | |
| A503 | EXTERIOR DETAILS - SECTION | 2021-01-11 | | | |
| A504 | EXTERIOR DETAILS - ROOF | 2021-01-11 | | | |
| A510 | WALL TYPES | 2021-01-11 | | | |
| A520 | ATAS METAL PANEL TRIM DETAILS | 2021-01-11 | | | |
| A530 | INTERIOR DETAILS | 2021-01-11 | | | |
| A540 | MILLWORK DETAILS | 2021-01-11 | | | |
| A601 | FINISH SCHEDULE | 2021-01-11 | | | |
| A602 | DOOR, HARDWARE & SCHEDULES | 2021-01-11 | | | |
| A603 | STOREFRONT SCHEDULES & ELEVATIONS | 2021-01-11 | | | |
| A701 | ARCHITECTURAL SPECIFICATIONS | 2021-01-11 | | | |
| A702 | ARCHITECTURAL SPECIFICATIONS | 2021-01-11 | | | |
| A703 | ARCHITECTURAL SPECIFICATIONS | 2021-01-11 | | | |
| A704 | ARCHITECTURAL SPECIFICATIONS | 2021-01-11 | | | |
| A705 | ARCHITECTURAL SPECIFICATIONS | 2021-01-11 | | | |
| A801 | EXTERIOR RENDERINGS | 2021-01-11 | | | |
| A802 | INTERIOR RENDERINGS | 2021-01-11 | | | |
| 05 KITCHEN EQUIPMENT | | | | | |
| QF001 | FOODSERVICE GENERAL NOTES, LEGENDS, SHEET INDEX | 2021-01-11 | | | |
| QF101 | FOODSERVICE EQUIPMENT PLAN | 2021-01-11 | | | |
| QF102 | FOODSERVICE SCHEDULES | 2021-01-11 | | | |
| QF102A | FOODSERVICE UTILITY SCHEDULES | 2021-01-11 | | | |
| QF102B | FOODSERVICE UTILITY SCHEDULES | 2021-01-11 | | | |
| QF201 | FOODSERVICE PLUMBING IN-SLAB ROUGH-IN PLAN | 2021-01-11 | | | |
| QF202 | FOODSERVICE PLUMBING ABOVE SLAB ROUGH-IN PLAN | 2021-01-11 | | | |
| QF301 | FOODSERVICE ELECTRICAL ROUGH-IN PLAN | 2021-01-11 | | | |
| QF401 | FOODSERVICE SPECIAL CONDITIONS PLAN | 2021-01-11 | | | |
| QF501 | FOODSERVICE ELEVATIONS | 2021-01-11 | | | |
| 06 FIRE PROTECTION | | | | | |
| F001 | FIRE PROTECTION ABBREVIATIONS & SYMBOLS | 2021-01-11 | | | |
| F101 | FIRE PROTECTION PLAN | 2021-01-11 | 1 | 2021-03-09 | ADDENDUM 1 |
| F501 | FIRE PROTECTION DETAILS | 2021-01-11 | | | |
| F590 | FIRE PROTECTION SPECIFICATIONS | 2021-01-11 | | | |
| F591 | FIRE PROTECTION SPECIFICATIONS | 2021-01-11 | | | |
| 07 MECHANICAL | | | | | |
| M001 | MECHANICAL ABBREVIATIONS & SYMBOLS | 2021-01-11 | | | |
| M101 | MECHANICAL FLOOR PLAN | 2021-01-11 | | | |
| M102 | MECHANICAL REFRIGERANT PIPING LAYOUT PLAN | 2021-01-11 | | | |
| M150 | MECHANICAL ROOF PLAN | 2021-01-11 | | | |
| M501 | MECHANICAL DETAILS | 2021-01-11 | | | |
| M502 | MECHANICAL DETAILS | 2021-01-11 | | | |
| M590 | MECHANICAL SPECIFICATIONS | 2021-01-11 | | | |
| M591 | MECHANICAL SPECIFICATIONS | 2021-01-11 | | | |
| M592 | MECHANICAL SPECIFICATIONS | 2021-01-11 | | | |
| M593 | MECHANICAL SPECIFICATIONS | 2021-01-11 | | | |
| M601 | MECHANICAL SCHEDULES | 2021-01-11 | | | |
| M701 | HALTON DRAWINGS | 2021-01-11 | | | |
| M702 | HALTON DRAWINGS | 2021-01-11 | | | |
| M703 | HALTON DRAWINGS | 2021-01-11 | | | |
| M704 | HALTON DRAWINGS | 2021-01-11 | | | |
| M705 | HALTON DRAWINGS | 2021-01-11 | | | |
| 08 PLUMBING | | | | | |
| P001 | PLUMBING ABBREVIATIONS & SYMBOLS | 2021-01-11 | | | |
| P101 | PLUMBING WASTE & VENT PLAN | 2021-01-11 | | | |
| P120 | PLUMBING WATER & GAS | 2021-01-11 | | | |
| P150 | PLUMBING ROOF PLAN | 2021-01-11 | | | |
| P501 | PLUMBING DETAILS | 2021-01-11 | | | |
| P502 | PLUMBING DETAILS | 2021-01-11 | | | |
| P590 | PLUMBING SPECIFICATIONS | 2021-01-11 | | | |
| P591 | PLUMBING SPECIFICATIONS | 2021-01-11 | | | |
| P592 | PLUMBING SPECIFICATIONS | 2021-01-11 | | | |
| P601 | PLUMBING SCHEDULE | 2021-01-11 | | | |
| P901 | PLUMBING RISER DIAGRAM | 2021-01-11 | | | |
| 09 ELECTRICAL | | | | | |
| E001 | ELECTRICAL ABBREVIATION & SYMBOL LEGEND | 2021-01-11 | | | |
| E100 | SITE ELECTRICAL PLAN | 2021-01-11 | | | |
| E101 | ELECTRICAL POWER PLAN | 2021-01-11 | 1 | 2021-03-09 | ADDENDUM 1 |
| E102 | LOW VOLTAGE SYSTEMS PLAN | 2021-01-11 | 1 | 2021-03-09 | ADDENDUM 1 |
| E120 | ELECTRICAL LIGHTING PLAN | 2021-01-11 | | | |
| E150 | ELECTRICAL ROOF PLAN | 2021-01-11 | | | |
| E501 | ELECTRICAL DETAILS | 2021-01-11 | | | |
| E590 | ELECTRICAL SPECIFICATIONS | 2021-01-11 | | | |
| E591 | ELECTRICAL SPECIFICATIONS | 2021-01-11 | | | |
| E601 | ELECTRICAL SCHEDULES & ONE-LINE | 2021-01-11 | 1 | 2021-03-09 | ADDENDUM 1 |
| E620 | LIGHTING SCHEDULES | 2021-01-11 | | | |
| E621 | LUTRON VIVE ONE-LINE | 2021-01-11 | | | |
| E622 | LUTRON VIVE ONE-LINE | 2021-01-11 | | | |

## AREA / LOCATION MAP

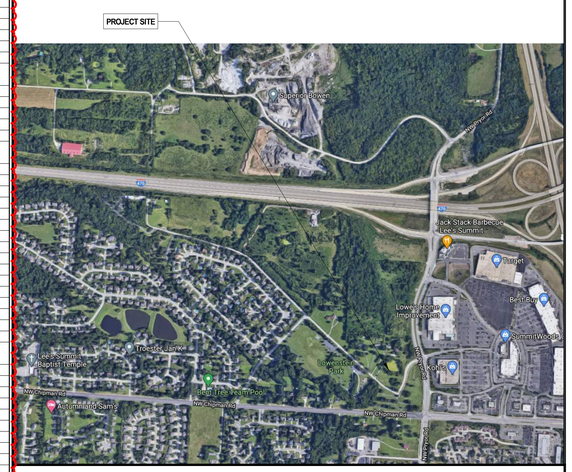


## KEY MAP

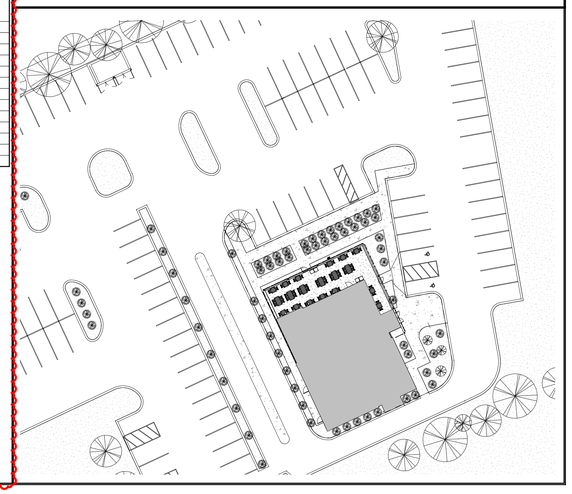


Joe Froggé
Bergmeyer
BOS - 51 Sleeper St. 6th Floor Boston, MA 02210 617.542.1025
LA - 800 South Figueroa St. Suite 1060 Los Angeles, CA 90017 212.337.1090
www.bergmeyer.com


CONSULTANTS:

SEAL/ SIGNATURE:

| NO. | BY | DATE | DESCRIPTION |
|---|---|---|---|
| 1 | | 2021-03-09 | ADDENDUM 1 |
| | | 2021-01-11 | PERMIT/BID SET |
| | | 2020-12-21 | 75% SET |
| | | 2020-10-12 | DD SET |

SHAKE SHACK®

SHAKE SHACK - LEE'S SUMMIT MO

2051 NW LOWENSTEIN DRIVE
LEE'S SUMMIT, MISSOURI 64081
SHACK #1348

PERMIT/BID SET

TITLE SHEET

| | |
|---|---|
| DRAWN BY: | CS & WQL |
| CHECKED BY: | JS |
| JOB NO: | 20068.00 |

T001

3/8/2021 2:33:17 PM C:\Users\jdevine\Documents\008_Shake Shack-Lee's Summit_Central_jdevine@bergmeyer.com.rvt

# NATIONAL ACCOUNTS & VENDOR LIST

GC TO CONFIRM ALL REQUIRED CONTRACTORS WITH SHAKE SHACK AND LANDLORD.

## GC PROVIDED ITEMS

LIGHTING ( 1 )
SPECIALTY LIGHTING GROUP
CONTACT: SANDY KINNE
T: 860.767.0110 x 210
E: SANDY.KINNE@SSLIGHTING.COM
CONTACT: ANUSH KAZARIAN
T: 860.767.0110 x 252
E: ANUSH.KAZARIAN@SSLIGHTING.COM

HVAC EQUIPMENT ( 2 )
CARRIER STRATEGIC ACCOUNTS
CONTACT: BOB ECKWEILER
T: 973.222.6742
E: BOB.ECKWEILER@CARRIER.UTC.COM

ALUMINUM PANELS ( 3 )
ATAS INTERNATIONAL INC.
CONTACT: DAVID WEIDL
T: 484.553.5409
E: DWEIDL@ATAS.COM

TILE ( 4 )
CREATIVE MATERIALS CORPORATION (CMC)
CONTACT: DOUG SALATINO
T: 518.713.5371
E: DSALATINO@CREATIVEMATERIALSCORP.COM
CONTACT: ALLISON PICHE
T: 518.713.5395
E: APICHE@CREATIVEMATERIALSCORP.COM

SAFE VENDOR ( 5 )
ACME SAFE COMPANY
CONTACT: DINA OLIVERI
T: 212.226.2500 x284
E: DOLIVERI@ACMESAFENEWYORK.COM

BLACK IRON WATER LEAK TEST ( 10 )
ENVIROMATIC
CONTACT: DON PFLEDERER
T: 800.325.8476
E: INSPECTIONS@ENVIROMATIC.COM

TESTING AND BALANCING ( 12 )
NATIONAL TAB
CONTACT: WILL TURNBOUGH
T: 314.954.6244
E: WILL@NATIONALTAB.COM

SHADES ( 14 )
ROLL-A-SHADE
CONTACT: ALLIE SMITH
T: 951.245.5077 x123
E: ALLIE.SMITH@ROLLASHADE.COM

INSTAKEY KEY CONTROL & LOCKS ( 16 )
CUSHMAN WAKEFIELD
CONTACT: HALEY D'ANNA
T: 603.362.7500
T: 978.284.2029
E: HDANNA@CUSHWAKE.COM

KITCHEN EPOXY FLOORING ( 17 )
DURAFLEX
CONTACT: JOHN CONWAY
T: 609.238.1265
E: JOHNC@DUR-A-FLEX.COM

SPECIAL / DEPUTY / 3RD-PARTY INSPECTIONS ( 18 )
TERRACON
CONTACT: ALICIA H. DUNSTAN, PE
T: 603-361-9048
E: ALICIA.DUNSTAN@TERRACON.COM

WELDED SEAM FLOORING (WALK-IN) ( 19 )
PROTECT-ALL
CONTACT: JERRY LEE
T: 989-739-6900 x6000
E: JLEE@PROTECT-ALLFLOORING.COM

ROOFING MEMBRANE SYSTEM ( 20 )
DURO-LAST
CONTACT: MIKE SUMAN
T: 617.370.5569
E: MSUMAN@DURO-LAST.COM

RESTROOM ACCESSORIES ( 21 )
HAINES, JONES, & CADBURY
CONTACT: WHITNEY ASHBRIDGE
T: 954.588.8194
E: WHITNEY.ASHBRIDGE@HJCINC.COM

## OWNER PROVIDED ITEMS

CO2 AND N2 EQUIPMENT ( 25 )
NUCO2
CONTACT: DEBBIE OLIVER
T: 770.833.0802
E: DOLIVER@NUCO2.COM
CONTACT: BRENT FAIRCHILD
T: 772.323.3693
E: BFAIRCHILD@NUCO2.COM

EXHAUST HOOD & FANS ( 26 )
HALTON
CONTACT: DAVID HARPRING
T: 502.445.6239
E: DAVID.HARPRING@HALTON.COM

KITCHEN EQUIPMENT CONTRACTOR ( 27 )
TRIMARK UNITED EAST
CONTACT: STEPHEN DUNGEY
T: 508.431.3410
E: STEPHEN.DUNGEY@TRIMARKUSA.COM

SODA SYSTEM ( 28 )
COCA-COLA
CONTACT: BRIGGETTE MOORE
T: 800.304.2652 EXT 2648
E: BRIGGMOORE@COCA-COLA.COM

OIL RECOVERY SYSTEM ( 29 )
RESTAURANT TECHNOLOGIES, INC (RTI)
CONTACT: AIMEE KRUEGER
T: 850.525.9366
E: AKRUEGER@RTI-INC.COM

SPECIALTY BEVERAGE EQUIPMENT ( 30 )
HARNEY TEA
CONTACT: ANDREW WILSON
T: 845.233.0255
E: ANDREW@HARNEYTEAS.COM

LOW VOLTAGE CONTRACTOR ( 31 )
SPENCER TECHNOLOGIES
CONTACT: LYNDIE THOMPSON
T: 440.417.4666
E: LYTHOMPSON@SPENCERTECH.COM
CONTACT: BRITTANY WINCHELL
T: 508.618.9524
E: BWINCHELL@SPENCERTECH.COM

SECURITY SYSTEM ( 33 )
PROTECTION 1 (ADT SECURITY)
CONTACT: CHRYSTAL KAUJA
T: 214.277.7206
E: CKAUJA@ADT.COM
CONTACT: MICHAEL KREY
T: 973.885.6092
E: MICHAELKREY@ADT.COM

SIGNAGE CONTRACTOR ( 35 )
JONES SIGN
CONTACT: SARA KOSTKA
T: 414.687.3175
E: SKOSTKA@JONESSIGN.COM

DINING TABLES (INDOOR) ( 36 )
COUNTER EVOLUTION
CONTACT: JIM MALONE
T: 917.297.9737
E: JIM@COUNTEREV.COM

DINING CHAIRS, STOOLS & OUTDOOR TABLES ( 37 )
UHURU
CONTACT: JASON HORVATH
T: 718.885.6519
E: JASON@UHURUDESIGN.COM

DINING BOOTHS & PICNIC TABLES ( 38 )
STAACH
CONTACT: BEN GORDON
C: 585.319.6627
E: BEN@STAACH.COM

CABLE ( 40 )
DIRECTV
CONTACT: JEROME HAWKES
T: 303.264.0020
E:JH231E@ATT.COM

## OWNER PROVIDED ITEMS CONT.

TRASH & RECYCLING BINS (OUTDOOR) ( 41 )
FACILITY CONCEPTS INC
CONTACT: WILLIAM DAY
T: 800.915.8890 x 117
E: WDAY@FCIUS.COM

CHEMICALS / DISHWASHER / WATER SOFTENER ( 43 )
SSOC / KAY CHEMICAL
CONTACT: MARTIN BRADSHAW
T: 612.220.6266
E: MARTIN.BRADSHAW@ECOLAB.COM

SITE CAMERA ( 44 )
EARTH CAM
CONTACT: MARIA CURY
T: 201.488.1111 x1031
E: MARIA@EARTHCAM.COM

# SUBMITTAL MATRIX

GC TO ALSO REVIEW ARCHITECTURAL SPECIFICATIONS (A700s) FOR REQUIRED SUBMITTALS THAT MIGHT NOT BE LISTED BELOW.

| SUBMITTAL | REQ'D REVIEW TIME | ARCHITECT | SHAKE SHACK | COMMISSIONING AGENT | PHYSICAL SAMPLE REQ'D | SUBMITTAL FOR RECORD | SUBMITTAL FOR RECORD ONLY |
|---|---|---|---|---|---|---|---|
| ANCHOR BOLTS SHOP DRAWINGS | 5 | X | | | | X | |
| ATAS - DETAILED SHOP DRAWINGS (SUBMITTED BY OWNER VENDOR DIRECTLY TO OWNER / AOR PRIOR TO CONSTRUCTION) | 5 | X | | | | | X |
| CONCRETE MIX DESIGN | 5 | X | | | | X | |
| CONSTRUCTION PREFUNCTIONAL CHECKLISTS | 5 | X | | X | | | X |
| DECORATIVE METAL SHOP DRAWINGS | 5 | X | | | | X | |
| DIFFUSERS, GRILLS & REGISTERS | 5 | X | | | | | |
| DOORS, FRAMES & HARDWARE | 7 | X | | | | X | |
| DUCTWORK LAYOUT (IF THERE ARE SIGNIFICANT CHANGES IN FIELD) | 5 | X | | X | | X | |
| ELECTRICAL DISTRIBUTION EQUIPMENT | 5 | X | | X | | | |
| ELEVATOR & VERTICAL TRANSPORTATION SHOP DRAWINGS | 5 | X | | | | | X |
| EPOXY FLOOR | 5 | X | | | | | X |
| FIRE ALARM SHOP DRAWINGS & DEVICE CUT SHEETS | 5 | X [2] | | X | | X | |
| FIRE SPRINKLER SHOP DRAWINGS, HYDRAULIC CALCULATIONS & DEVICE CUT SHEETS | 5 | X [2] | | X | | | X |
| HVAC EQUIPMENT (IF CARRIER - SUBMITTED BY OWNER VENDOR DIRECTLY TO OWNER/AOR PRIOR TO CONSTRUCTION) | 5 | X [2] | | X | | X | |
| LIGHT FIXTURES (SUBMITTED BY OWNER VENDOR DIRECTLY TO OWNER / AOR PRIOR TO CONSTRUCTION) | 5 | X | | X | | X | |
| MEP TESTS, START-UP, AND PROGRAMMING REPORTS | 5 | X | | X | | X | |
| MILLWORK - MATERIAL SUBMITTALS (IF DIFFERS FROM SPEC) | 5 | X | X | | X [1] | | |
| MILLWORK - SHOP DRAWINGS (CUSTOM ITEMS & DESIGN FEATURES ONLY) | 5 | X | | | | | |
| PLUMBING FIXTURES | 5 | X | | X | | X | |
| RAILING SHOP DRAWINGS | 5 | X | | | | X | |
| REBAR | 5 | X | | | | X | |
| RESTROOM PARTITIONS | 5 | X | | | | X | |
| STAIR SHOP DRAWINGS | 5 | X [2] | | | | | X |
| STOREFRONT - PRODUCT DATA SUBMITTAL (IF DIFFERS FROM SPEC) | 5 | X | | | | | |
| STOREFRONT - SHOP DRAWINGS | 5 | X | | | | | |
| STRUCTURAL STEEL SHOP DRAWINGS | 7 | X [2] | | | | X | |
| TILE (IF DIFFERS FROM SPEC) | 5 | X | | | X [1] | X | |
| WINDOW FILM | 5 | X | | | | | |

NOTES

- SOME ITEMS MAY NOT APPLY TO THIS PROJECT
- REQ'D REVIEW TIME IS IN BUSINESS DAYS
- PLEASE SEND ALL PHYSICAL SAMPLES DIRECTLY TO SHAKE SHACK FOR APPROVAL:

SHAKE SHACK - DESIGN TEAM
ATTN: ALLISON PALMADESSO
ATTN: MO-1348-LEES SUMMIT
225 VARICK ST, SUITE 301
NEW YORK, NY 10014

- FOR ARCHITECT SAMPLES SEND TO:

BERGMEYER ASSOCIATES
ATTN: QUINN LEVINE
ATTN: MO-1348-LEES SUMMIT
51 SLEEPER STREET, 6TH FLOOR
BOSTON, MA 02210

X [1] - SHIP PHYSICAL SAMPLE DIRECT TO ARCHITECT AT THE ADDRESS LISTED ABOVE

X [2] - SHOPS & CALCULATIONS TO BE SIGNED & SEALED BY A REGISTERED PROFESSIONAL ENGINEER LICENSED IN THE STATE IN WHICH THE PROJECT IS LOCATED

# RESPONSIBILITY SCHEDULE

LL = LANDLORD
GC = GENERAL CONTRACTOR
O = OWNER / OWNER'S VENDOR

THIS SCHEDULE IS PROVIDED FOR QUICK REFERENCE ONLY.
THE GENERAL CONTRACTOR IS RESPONSIBLE FOR ALL WORK DESCRIBED IN THE CONSTRUCTION DOCUMENTS.
CONFLICTS BETWEEN THIS SCHEDULE AND THE REST OF THE CONTRACT DOCUMENTS SHALL BE BROUGHT TO THE ARCHITECT'S ATTENTION PRIOR TO BEGINNING WORK.

| DESCRIPTION | FURNISHED: GENERAL CONTRACTOR | FURNISHED: OWNER | FURNISHED: LANDLORD | INSTALLED: GENERAL CONTRACTOR | INSTALLED: OWNER | INSTALLED: LANDLORD | REMARKS |
|---|---|---|---|---|---|---|---|
| **DIVISION 01: GENERAL REQUIREMENTS** | | | | | | | |
| 1.1 PERMITS AND FEES | | | | | | | |
| 1.1.1 PERMIT FEES | | ● | | | ● | | GENERAL CONTRACTOR TO PULL PERMITS FOR THE BUILDING, MECHANICAL, ELECTRICAL, PLUMBING, HEALTH, AND/OR ENVIRONMENT |
| 1.1.2 OTHER PERMITS AND FEES | ● | | | ● | | | GENERAL CONTRACTOR TO SECURE AND PAY FOR OTHER REQUIRED PERMITS AND FEES NOT NOTED IN LINE ITEM 1.1.1 |
| 1.2 TEMPORARY UTILITIES | | | ● | | | ● | |
| 1.3 TEMPORARY BARRICADES OR SITE FENCING | | | ● | | | ● | |
| 1.3.1 BARRICADE GRAPHICS | | ● | | | ● | | |
| 1.4 CONSTRUCTION DUMPSTERS AND TRASH BINS | ● | | | ● | | | GENERAL CONTRACTOR TO COORDINATE WITH LANDLORD, WASTE MANAGEMENT, CITY AND COUNTY |
| 1.5 FINAL CLEANING | ● | | | ● | | | SITE TO BE PROFRESSIONALLY CLEANED PRIOR TO STOCKING, TRAINING AND OPENING |
| 1.6 CERTIFICATE OF OCCUPANCY | ● | | | ● | | | TO INCLUDE BUILDING, FIRE AND HEALTH INSPECTIONS |
| 1.7 SITE PREPERATION FOR NEW PAD | | | ● | | | ● | |
| **DIVISION 02: EXISTING CONDITIONS** | | | | | | | |
| 2.1 DEMOLITION | | | ● | | | ● | |
| **DIVISION 03: CONCRETE** | | | | | | | |
| 3.1 CONCRETE SLAB AND FOUNDATION | ● | | | ● | | | REFER TO STRUCTUAL DRAWINGS AND ARCHITECTURALS FOR ADDITIONAL INFORMATION |
| 3.2 CONCRETE CUTTING AND CORING | ● | | | ● | | | SCOPE OF WORK INCLUDES ALL CORING REQUIRED BY OWNER-VENDOR SCOPE<br>COORDINATE WITH OWNER-VENDOR<br>INCLUDE SCAN OR X-RAY AS NEEDED |
| **DIVISION 04: MASONRY** | | | | | | | |
| 4.1 MASONRY AND STUCCO | ● | | | ● | | | |
| **DIVISION 05: METALS** | | | | | | | |
| 5.1 STRUCTURAL STEEL | ● | | | ● | | | SCOPE OF WORK INCLUDES ROOF AND WALL PENETRATIONS |
| 5.2 SIGN STEEL BEAM | ● | | | ● | | | SCOPE OF WORK TO INCLUDE INTERIOR AND EXTERIOR BEAMS |
| 5.3 ROOF LADDER AND HATCH | ● | | | ● | | | |
| 5.4 FRAMING | ● | | | ● | | | |
| 5.5 REVEALS AND TRIMS | ● | | | ● | | | |
| 5.6 UNISTRUT, THREADED ROD AND AIRCRAFT CABLE | ● | | | ● | | | |
| 5.7 STEEL STAIRS AND RAILINGS | ● | | | ● | | | |
| **DIVISION 06: WOOD, PLASTICS AND COMPOSITES** | | | | | | | |
| 6.1 STURCTURAL FRAMING | ● | | | ● | | | SCOPE OF WORK TO INCLUDE REINFORCEMENT IN ROOF PENETRATIONS |
| 6.2 PATIO TRELLIS | ● | | | ● | | | |
| 6.3 FINISH CARPENTRY | | | | | | | |
| 6.3.1 WOOD TRIM, WAINSCOT, MILLWORKS WALLS | ● | | | ● | | | |
| 6.3.2 RECLAIMED WOOD | ● | | | ● | | | |
| 6.4 ARCHITECTURAL WOODWORK | | | | | | | |
| 6.4.1 MILLWORK CASEWORK | ● | | | ● | | | |
| 6.4.2 REQUIRED WALL AND CEILING BACKING | ● | | | ● | | | |
| 6.5 WOOD PANELING | ● | | | ● | | | |
| **DIVISION 07: THERMAL AND MOISTURE PROTECTION** | | | | | | | |
| 7.1 INSULATION | ● | | | ● | | | |
| 7.2 ROOF PENETRATIONS | ● | | | ● | | | |
| 7.3 PRE-FINISHED PARAPET COPING | ● | | | ● | | | |
| 7.3 SEALANTS AND CAULKING | ● | | | ● | | | |
| 7.4 EXTERIOR INSULATION AND FINISH SYSTEM (EIFS) | ● | | | ● | | | |
| **DIVISION 08: OPENINGS** | | | | | | | |
| 8.1 DOORS AND FRAMES | ● | | | ● | | | |
| 8.2 METAL CEILING ACCESS PANELS | ● | | | ● | | | |
| 8.3 STOREFRONT SYSTEMS AND CURTAIN WALL | ● | | | ● | | | |
| 8.4 DOOR HARDWARE | ● | | | ● | | | |
| 8.5 INTERIOR BUTT GLAZING AND METAL CHANNEL FRAME | ● | | | ● | | | |
| **DIVISION 09: FINISHES** | | | | | | | |
| 9.1 GYPSUM WALLBOARD AND ACCESSORIES | ● | | | ● | | | |
| 9.2 SUSPENDED GYPSUM BOARD CEILING AND FRAMING | ● | | | ● | | | |
| 9.3 SUSPENDED "T" BAR LAY0IN CEILING | ● | | | ● | | | |
| 9.4 WALL TILES | ● | | | ● | | | GENERAL CONTRACTOR TO PURCHASE FROM VENDOR NO. 4<br>VENDOR SUBSTITUTION IS NOT PERMITTED |
| 9.5 PRE-FINISHED CORRUGATED METAL PANELING AND FLAT STOCK | ● | | | ● | | | GENERAL CONTRACTOR TO PURCHASE FROM VENDOR NO. 3<br>VENDOR SUBSTITUTION IS NOT PERMITTED |
| 9.6 FLOORING | | | | | | | |
| 9.6.1 TILE FLOORING | ● | | | ● | | | GENERAL CONTRACTOR TO PURCHASE FROM VENDOR NO. 4<br>VENDOR SUBSTITUTION IS NOT PERMITTED |
| 9.6.2 CONCRETE POLISHING AND SEALER | ● | | | ● | | | |
| 9.6.3 THRESHOLDS | ● | | | ● | | | |
| 9.6.4. REDUCERS | ● | | | ● | | | |
| 9.6.5 PRE-FINISHED WALK-IN COOLER AND FREEZER | | ● | | | ● | | PROVIDED BY VENDOR NO. 27 |
| 9.7 INTERIOR PAINT | ● | | | ● | | | |

| DESCRIPTION | FURNISHED: GENERAL CONTRACTOR | FURNISHED: OWNER | FURNISHED: LANDLORD | INSTALLED: GENERAL CONTRACTOR | INSTALLED: OWNER | INSTALLED: LANDLORD | REMARKS |
|---|---|---|---|---|---|---|---|
| **DIVISION 10: SPECIALTIES** | | | | | | | |
| 10.1 IDENTIFICATION DEVICES | | | | | | | |
| 10.1.1 EXTERIOR BUILDING MOUNTED SIGNAGE | | ● | | | ● | | GENERAL CONTRACTOR TO COORDINATE AND REVIEW SIGN PACKAGE WITH VENDOR NO. 35 FOR ADDITIONAL SCOPE OF WORK (E.G. PROVIDING POWER AND BLOCKING) |
| 10.1.2 TACTILE SIGNAGE | | ● | | | ● | | SUPPLIED BY VENDOR NO. 35 |
| 10.1.3 SERVICE DOOR IDENTIFICATION | | ● | | ● | | | |
| 10.1.4 ACCESSIBILITY AND MISCELLANEOUS RESTROOM SIGNAGE | | ● | | ● | | | SUPPLIED BY VENDOR NO. 35 |
| 10.1.5 BAND LETTERS | | ● | | | ● | | GENERAL CONTRACTOR TO COORDINATE AND REVIEW SIGN PACKAGE WITH VENDOR NO. 35 FOR ADDITIONAL SCOPE OF WORK (E.G. PROVIDING POWER, BLOCKING, AND SUPPORT) |
| 10.1.6 ARTWORK AND ARTIFACTS | | ● | | ● | | | GENERAL CONTRACTOR TO COORDINATE LOCATIONS WITH OTHER FOR ADDITIONAL SCOPE OF WORK (E.G. PROVIDING BLOCKING) |
| 10.1.7 MENU BOARD, WINE RACK, AND MERCHANDISE DISPLAYS | | ● | | | ● | | GENERAL CONTRACTOR TO COORDINATE WITH VENDOR NO. 35 FOR ADDITIONAL SCOPE OF WORK (E.G. PROVIDING BLOCKING) |
| 10.2 FIRE PROTECTION DEVICES | | | | | | | |
| 10.2.1 FIRE EXTINGUISHERS AND CABINETS | ● | | | ● | | | |
| 10.2.2 RISER ROOM IDENTIFICATION | ● | | | ● | | | GENERAL CONTRACTOR TO COORDINATE WITH THE FIRE DEPARTMENT |
| 10.3 TOILET ROOMS | | | | | | | |
| 10.3.1 TOILET ROOM ACCESSORIES | ● | | | ● | | | SUPPLIED BY VENDOR NO. 21 |
| 10.3.2 TOILET ROOM HARDWARE | ● | | | ● | | | |
| 10.3.3 HAND DRYERS | ● | | | ● | | | SUPPLIED BY VENDOR NO. 21 |
| 10.4 KITCHEN DISPLAY SYSTEM (KDS) MOUNTS | | ● | | | ● | | SUPPLIED AND INSTALLED BY VENDOR NO. 27 |
| 10.5 GLOVE BOXES | | ● | | ● | | | |
| 10.6 OFFICE SAFE | ● | | | ● | | | GENERAL CONTRACTOR TO PURCHASE FROM VENDOR NO. 5 AND TO INCLUDE BOLT-DOWN SERVICES<br>VENDOR SUBSTITUTION IS NOT PERMITTED<br>REFER TO ARCHITECTURAL DETAILS FOR ADDITIONAL INFORMATION |
| 10.7 FIBERGLASS REINFORCED PANELS (FRP) AND ACCESSORIES | ● | | | ● | | | |
| 10.8 STAINLESS STEEL KITCHEN WALL PANELS | | ● | | | ● | | SUPPLIED AND INSTALLED BY VENDOR NO. 27<br>GENERAL CONTRACTOR TO PROVIDE SUBSTRATE STAINLESS |
| 10.9 STAINLESS STEEL KITCHEN CORNER GUARDS AND END CAPS | | ● | | | ● | | SUPPLIED AND INSTALLED BY VENDOR NO. 27 |
| **DIVISION 11: EQUIPMENT** | | | | | | | |
| 11.1 FOOD SERVICE EQUIPMENT | | ● | | | ● | | SUPPLIED AND INSTALLED BY VENDOR NO. 27<br>GENERAL CONTRACTOR SCOPE OF WORK TO INCLUDE FINAL UTILITY CONNECTIONS |
| 11.2 STAINLESS STEEL FABRICATED COUNTERS AND SHELVING | | ● | | | ● | | SUPPLIED AND INSTALLED BY VENDOR NO. 27 |
| 11.3 CONDIMENT COUNTER | | ● | | | ● | | SUPPLIED AND INSTALLED BY VENDOR NO. 27<br>GENERAL CONTRACTOR SCOPE OF WORK TO INCLUDE FINAL UTILITY CONNECTIONS |
| 11.4 STORAGE RACKS AND SHELVING | | ● | | | ● | | GENERAL CONTRACTOR TO COORDINATE WITH VENDOR NO. 27 FOR ADDITIONAL SCOPE OF WORK (E.G. PROVIDING BLOCKING) |
| 11.5 SODA SYSTEM | | | | | | | SUPPLIED AND INSTALLED BY VENDOR NO. 28 |
| 11.5.1 SYSTEM COMPONENTS | | ● | | | ● | | |
| 11.5.2 CONDUIT | ● | | | ● | | | GENERAL CONTRACTOR TO COORDINATE WITH VENDOR NO.28 |
| 11.6 CARBON DIOXIDE (CO2) SYSTEM | | | | | | | SUPPLIED AND INSTALLED BY VENDOR NO. 25 |
| 11.6.1 CO2 TANKS | | ● | | | ● | | |
| 11.6.2 CO2 LINES | | ● | | | ● | | |
| 11.6.3 CONDUIT | ● | | | ● | | | |
| 11.6.4 EXTERIOR FILL BOX | | ● | | ● | | | |
| 11.7 OIL RECOVERY SYSTEM | | | | | | | SUPPLIED AND INSTALLED BY VENDOR NO. 29 |
| 11.7.1 OIL TANKS | | ● | | | ● | | |
| 11.7.2 OIL LINES | | ● | | | ● | | |
| 11.7.3 CONDUIT | ● | | | ● | | | GENERAL CONTRACTOR TO COORDINATE WITH VENDOR NO.29 |
| 11.7.4 EXTERIOR FILL BOX | | ● | | ● | | | |
| **DIVISION 12: FURNISHINGS** | | | | | | | |
| 12.1 FIXED SEATING (BOOTHS, BENCHES, ETC.) | | ● | | ● | | | SUPPLIED BY VENDORS NO. 36, 37, AND 38<br>GENERAL CONTRACTOR SCOPE OF WORK TO INCLUDE DELIVERY COORDINATION AND STAGING OF MATERIALS, TABLE ASSEMBLY, BOTH AND HIGHT-TOP ANCHORING, AND INSTALLATION OF HOOKS AND BRACKETS |
| 12.2 TABLE TOP BASES | | ● | | ● | | | SUPPLIED BY VENDOR NO. 36 |
| 12.3 CHAIRS AND STOOLS | | ● | | ● | | | SUPPLIED BY VENDOR NO. 37 |
| 12.4 OFFICE MILLWORK | ● | | | ● | | | |
| 12.5 WINDOW SHADES | ● | | | ● | | | GENERAL CONTRACTOR TO PURCHASE FROM VENDOR NO. 14<br>VENDOR SUBSTITUTION IS NOT PERMITTED |
| 12.6 OFFICE AND BACK OF HOUSE MISCELLANEOUS SUPPLIES | ● | | | ● | | | |
| 12.7 KIOSK TABLE | | ● | | ● | | | GENERAL CONTRACTOR SCOPE OF WORK TO INCLUDE RECEIPT AND INSTALLATION OF MATERIALS |
| 12.8 KIOSK PADS | | ● | | | ● | | |
| 12.9 INTERIOR TRASH RECEPTACLES | | ● | | | ● | | SUPPLIED AND INSTALLED BY VENDOR NO. 27 |
| 12.10 SITE FURNISHINGS | | | | | | | |
| ~~12.10.1 UMBREALLAS AND BASES~~ | | ● | | ● | | | SUPPLIED BY VENDOR NO. 39<br>GENERAL CONTRACTOR SCOPE OF WORK TO INCLUDE RECEIPT, ASSEMBLY, AND INSTALLATION OF MATERIALS |
| 12.10.2 PATIO CEILING FANS | ● | | | ● | | | GENERAL CONTRACTOR TO PURCHASE FROM VENDOR NO. 1<br>VENDOR SUBSTITUTION IS NOT PERMITTED |
| ~~12.10.3 MOBILE PLANTER BOXES~~ | | ● | | ● | | | SUPPLIED BY VENDOR NO. 37<br>GENERAL CONTRACTOR SCOPE OF WORK TO INCLUDE RECEIPT, ASSEMBLY, AND INSTALLATION OF MATERIALS |
| 12.10.4 FIXED PLANTER BOXES AND LINERS | ● | | | ● | | | |
| 12.10.5 PATIO RAILING AND GATES | ● | | | ● | | | |
| 12.10.6 EXTERIOR TRASH RECEPTACLES | | ● | | | ● | | |
| 12.11 WALK-OFF MATTS | | ● | | | ● | | |
| 12.12 EMPLOYEE LOCKERS | ● | | | ● | | | |
| **DIVISION 13: SPECIAL CONSTRUCTION** | | | | | | | |
| 13.1 WALK-IN FREEZER AND COOLER | | ● | | | ● | | GENERAL CONTRACTOR TO COORDINATE INSTALLATION DETAILS WITH VENDOR NO. 27 |
| 13.2 REFRIGERATED TRASH ENCLOSURE | | ● | | | ● | | GENERAL CONTRACTOR TO COORDINATE INSTALLATION DETAILS WITH VENDOR NO. 27 |
| **DIVISION 32: EXTERIOR IMPROVEMENTS** | | | | | | | |
| 32.1 IRRIGATION SYSTEM | ● | | | ● | | | GENERAL CONTRACTOR TO COORDINATE WITH LANDLORD FOR POINT OF CONNECTION |
| 32.2 PARKING LOT PATCH SEAL, AND STRIP | | | ● | | | ● | |
| 32.3 RAMPS | ● | | | ● | | | SCOPE OF WORK IS LIMITED TO THE CONSTRUCTION LINE<br>REFER TO CIVIL PLANS FOR ADDITIONAL INFORMATION |
| 32.4 PAVING AND HARDSCAPE | ● | | | ● | | | SCOPE OF WORK IS LIMITED TO THE CONSTRUCTION LINE<br>REFER TO CIVIL PLANS FOR ADDITIONAL INFORMATION |
| 32.5 CONCRETE CURBS | ● | | | ● | | | SCOPE OF WORK IS LIMITED TO THE CONSTRUCTION LINE<br>REFER TO CIVILE PLANS FOR ADDITIONAL INFORMATION |
| 32.6 TRASH ENCLOSURE | | | ● | | | ● | |
| 32.7 LANDSCAPE PLANT MATERIAL | ● | | | ● | | | SCOPE OF WORK IS LIMITED TO THE CONSTRUCTION LINE<br>REFER TO CIVILPLANS FOR ADDITIONAL INFORMATION<br>PROVIDE LANDSCAPE MAINTENANCE CONTRACT PROPOSAL TO OWNER FOR REVIEW AND APPROVAL |

RELEASE FOR CONSTRUCTION
AS NOTED ON PLANS REVIEW
DEVELOPMENT SERVICES
LEE'S SUMMIT, MISSOURI
03/10/2021


Bergmeyer
BOS - 51 Sleeper St. 6th Floor Boston, MA 02210 617.542.1025
LA - 800 South Figueroa St. Suite 1060 Los Angeles, CA 90017 212.337.1090
www.bergmeyer.com


CONSULTANTS:

SEAL/ SIGNATURE:

| NO. | BY | DATE | DESCRIPTION |
|---|---|---|---|
| | | 2021-01-11 | PERMIT/BID SET |
| | | 2020-12-21 | 75% SET |

SHAKE SHACK

SHAKE SHACK - LEE'S SUMMIT MO

2051 NW LOWENSTEIN DRIVE
LEE'S SUMMIT, MISSOURI 64081
SHACK #1348

PERMIT/BID SET

RESPONSIBILITY SCHEDULE & VENDOR CONTACTS

DRAWN BY: CS & WQL
CHECKED BY: JS
JOB NO: 20068.00

T002

C:\Users\qlevine\Documents\006_Shake Shack Lee's Summit_Central_qlevine@bergmeyer.com.rvt

10/1/2021 6:03:48 PM

## NOT USED

## MATERIALS

- CONCRETE
- GROUT
- FINISH LUMBER
- TILE
- STEEL & OTHER METALS
- WOOD BLOCKING, SHIM
- PLYWOOD, PL FACE
- SOLID SURFACE
- GROUND FILL
- CRUSHED STONE
- INSULATION, LOOSE
- INSULATION, RIGID
- SEALANT, BACKER
- GYP. BD.

## SYMBOLS

- ? — ROOM NAME
- ? — ROOM NUMBER
- 01 — KEYNOTE
- ? — DOOR NUMBER
- ? A.F.F. / ? PTD ? — CEILING HEIGHT / CEILING TYPE AND FINISH
- LEVEL / HEIGHT — ELEVATION DATUM
- ? — REVISION
- ℄ — CENTERLINE
- FINISH TAG
- EIFS / A-510 — EXTERIOR WALL SYSTEM TAG / REFERENCE SHEET
- ? ? — FIXTURE TAG
- POINT OF BEGINNING
- DTL / SHT — SECTION
- DTL / SHT — DETAIL CALLOUT
- SHT DTL — ELEVATION
- DTL / SHT — PLAN DETAIL
- COLUMN GRID
- A — ALIGN
- X — 3D VIEW DIRECTION
- DIRECTION OF WOOD GRAIN

## ABBREVIATIONS

| | | | | | | | |
|---|---|---|---|---|---|---|---|
| @ | AT | EA | EACH | L | LONG (LENGTH) | SC | SOLID CORE |
| ABV | ABOVE | ELEC | ELECTRICAL | L/T | LIGHT TRACK | SCHED | SCHEDULE |
| AFF | ABOVE FINISHED FLOOR | EL | ELEVATION | LAM | LAMINATE | SCN | SCREEN |
| AP | ACCESS PANEL | ELEV | ELEVATOR | LAV | LAVATORY | SD | SMOKE DETECTOR |
| ACT | ACOUSTICAL CEILING TILE | EMER | EMERGENCY | LBS | POUNDS | SECT | SECTION |
| ADA | AMERICANS W/ DISABILITIES ACT | EQ | EQUAL | LF | LINEAR FOOT | SF | SQUARE FOOT (FEET) |
| ADJ | ADJACENT | EQUIP | EQUIPMENT | LGL | LAMINATED GLASS | SHT | SHEET |
| ADJT | ADJUSTABLE | ETR | EXISTING TO REMAIN | LH | LEFT-HANDED | SIM | SIMILAR |
| AGG | AGGREGATE | EWC | ELECTRIC WATER COOLER | LL | LANDLORD | SIPS | STRUCTURAL INSULATED PANEL |
| A/C | AIR CONDITIONING | EXH | EXHAUST | L.O.D. | LEASE OUTLINE DRAWING | SND INS | SOUND INSULATION |
| ALT | ALTERNATE | EXT | EXTERIOR | L.P. | LOW POINT | SPEC | SPECIFICATION |
| AL | ALUMINUM | | | LT | LIGHT | SPK | SPEAKER |
| ANC | ANCHOR, ANCHORAGE | FA | FIRE ALARM | LTL | LINTEL | SPL | SPECIAL |
| AB | ANCHOR BOLT | FD | FLOOR DRAIN | | | SQ | SQUARE |
| ANOD | ANODIZED | FE | FIRE EXTINGUISHER | MAT | MATERIAL | SS | STAINLESS STEELOUP |
| ARCH | ARCHITECT, ARCHITECTURAL | FEC | FIRE EXTINGUISHER CABINET | MAX | MAXIMUM | STD | STANDARD |
| AD | AREA DRAIN | FF | FINISH FACE | MBR | MEMBER | STG | SEATING |
| ASPH | ASPHALT | FF EL | FINISH FLOOR ELEVATION | MDO | MEDIUM DENSITY OVERLAY | STL | STEEL |
| AT | ASPHALT TILE | FIN | FINISH | MECH | MECHANICAL | STN | STAIN |
| | | FIXT | FIXTURE | MFR | MANUFACTURER | STO | STONE TILE |
| BL | BASE LINE | FLR | FLOOR | MIN | MINIMUM | SYM | SYMMETRY, (ICAL) |
| BM | BEAM | FLUOR | FLUORESCENT | MISC | MISCELLANEOUS | SYS | SYSTEM |
| BRG | BEARING | FOC | FACE OF CONCRETE | MOD | MODIFIED | SUSP | SUSPENDED |
| BPL | BEARING PLATE | FOF | FACE OF FINISH | MTD | MOUNTED | | |
| BEL | BELOW | FOS | FACE OF STUD | MTL | METAL | T | TREAD |
| BM | BENCH MARK | FRT | FIRE RETARDANT TREATED | | | T&G | TONGUE & GROOVE |
| BLK | BLOCK | FT | FOOT (FEET) | NAT | NATURAL | THK | THICKNESS |
| BLKG | BLOCKING | FTG | FOOTING | NIC | NOT IN CONTRACT | THR | THRESHOLD |
| BD | BOARD | | | NO | NUMBER | TO | TOP OF |
| BS | BOTH SIDES | GA | GAGE, GAUGE | NOM | NOMINAL | TOB | TOP OF BEAM |
| BO | BOTTOM OF | GALV | GALVANIZED | NR | NOISE REDUCTION | TOC | TOP OF CONCRETE |
| BRKT | BRACKET | GC | GENERAL CONTRACTOR | NTS | NOT TO SCALE | TOJ | TOP OF JOIST |
| BRS | BRASS | GL | GLASS, GLAZING | | | TOM | TOP OF MASONRY |
| BRK | BRICK | GCMU | GLAZED CONCRETE MASONRY | OA | OVERALL | TOS | TOP OF SLAB |
| BRZ | BRONZE | GLAM | GLUED LAMINATE | OC | ON CENTER | TOS | TOP OF STEEL |
| BLDG | BUILDING | GD | GRADE, GRADING | OD | OUTSIDE DIAMETER | TOW | TOP OF WALL |
| BUR | BUILT UP ROOFING | GMB | GYPSUM WALL BOARD | OPP | OPPOSITE | TPG | TOPPING |
| | | GYP | GYPSUM | ORD | OVERFLOW ROOF DRAIN | TYP | TYPICAL |
| CPT | CARPET | | | | | | |
| CSMT | CASEMENT | HC | HOLLOW CORE | P | PAINT | UC | UNDERCUT |
| CLG | CEILING | HCWD | HOLLOW CORE WOOD DOOR | PBD | PARTICLE BOARD | UNF | UNFINISHED |
| CLG HT | CEILING HEIGHT | HDWD | HARDWOOD | PERF | PERFORATED) | UNO | UNLESS NOTED OTHERWISE |
| CEM | CEMENT | HDWR | HARDWARE | PLAM | PLASTIC LAMINATE | UTL | UTILITY |
| CL | CENTER LINE | HM | HOLLOW METAL | PLBG | PLUMBING | | |
| CLR | CLEAR, CLEARANCE | HMF | HOLLOW METAL FRAME | PLT | PLATE | VCT | VINYL COMPOSITE TILE |
| COL | COLUMN | HORIZ | HORIZONTAL | PLYWD | PLYWOOD | VERT | VERTICAL |
| CONC | CONCRETE | H.P. | HIGH POINT | POS | POINT OF SALE | VIF | VERIFY IN FIELD |
| CMU | CONCRETE MASONRY UNIT | HT | HEIGHT | PPL | PEOPLE | VG | VERTICAL GRAIN |
| CONN | CONNECTION | HVAC | HEATING, VENTILATION & COOLING | PR | PAIR | VF | VINYL FABRIC |
| CONST | CONSTRUCTION | HW | HOT WATER | PTD | PAINTED | VT | VINYL TILE |
| CONT | CONTINUE, CONTINUOUS | | | P.T. | PRESSURE TREATED | | |
| CONTR | CONTRACT(OR) | IN | INCH | PTN | PARTITION | W/ | WITH |
| CG | CORNER GUARD | INCL | INCLUDE, (ED), (ING) | PVC | POLYVINYL CHLORIDE | W/O | WITHOUT |
| CORR | CORRUGATED | ID | INSIDE DIAMETER | | | WA | WALL ANCHOR |
| CTR | COUNTER | INSUL | INSULATION | R | RISER | WC | WATER CLOSET |
| | | INT | INTERIOR | RAD | RADIUS | WD | WOOD |
| DTL | DETAIL | | | RD | ROOF DRAIN | WF | WIDE FLANGE |
| DIAG | DIAGONAL | JC | JANITOR'S CLOSET | REC | RECESSED | WFAB | WALL FABRIC |
| DIA | DIAMETER | JT | JOINT | REQD | REQUIRED | WH | WATER HEATER |
| DIM | DIMENSION | JF | JOINT FILLER | REF | REFERENCE | WIN | WINDOW |
| DIV | DIVISION | | | RESIL | RESILIENT | WP | WORKING POINT |
| DR | DOOR | KEC | KITCHEN EQUIPMENT CONTRACTOR | REV | REVISION | WWF | WELDED WIRE FABRIC |
| DN | DOWN | KPL | KICK PLATE | RH | RIGHT HAND | | |
| DWG | DRAWING | KIT | KITCHEN | RM | ROOM | | |
| | | | | RO | ROUGH OPENING | | |

## TYPICAL MOUNTING HEIGHTS

ALL DEVICES SHALL BE INSTALLED AT MOUNTING HEIGHTS AS INDICATED ON THIS DETAIL, U.N.O.
ALSO REFER TO E-SHEETS FOR TYPICAL MOUNTING HEIGHTS

DEVICES SHALL BE INSTALLED ON A COMMON VERTICAL CENTERLINE WHEREVER POSSIBLE

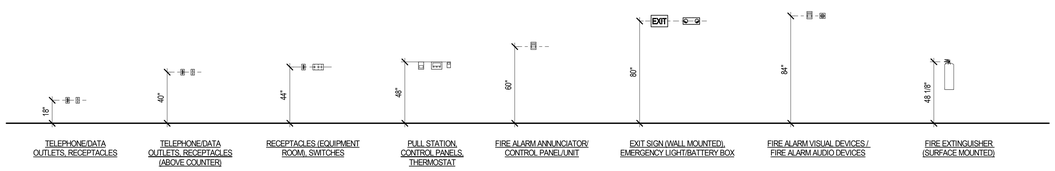


## NOT USED

RELEASE FOR CONSTRUCTION
AS NOTED ON PLANS REVIEW
DEVELOPMENT SERVICES
LEE'S SUMMIT, MISSOURI
03/10/2021


Bergmeyer
www.bergmeyer.com
BOS - 51 Sleeper St. 6th Floor Boston, MA 02210 617.542.1025
LA - 800 South Figueroa St. Suite 1060 Los Angeles, CA 90017 212.337.1090


CONSULTANTS:

SEAL/ SIGNATURE:

| NO. | BY | DATE | DESCRIPTION |
|---|---|---|---|
| | | 2021-01-11 | PERMIT/BID SET |
| | | 2020-12-21 | 75% SET |

SHAKE SHACK

SHAKE SHACK - LEE'S SUMMIT MO

2051 NW LOWENSTEIN DRIVE
LEE'S SUMMIT, MISSOURI 64081
SHACK #1348

PERMIT/BID SET

SYMBOLS, GENERAL NOTES & ABBREVIATIONS

DRAWN BY: CS & WQL
CHECKED BY: JS
JOB NO: 20068.00

T003


1/11/2021 6:03:49 PM C:\Users\djevine\Documents\008_Shake Shack-Lee's Summit_Central_djevine@bergmeyer.com.rvt

RELEASE FOR CONSTRUCTION
AS NOTED ON PLANS REVIEW
DEVELOPMENT SERVICES
LEE'S SUMMIT, MISSOURI
03/10/2021

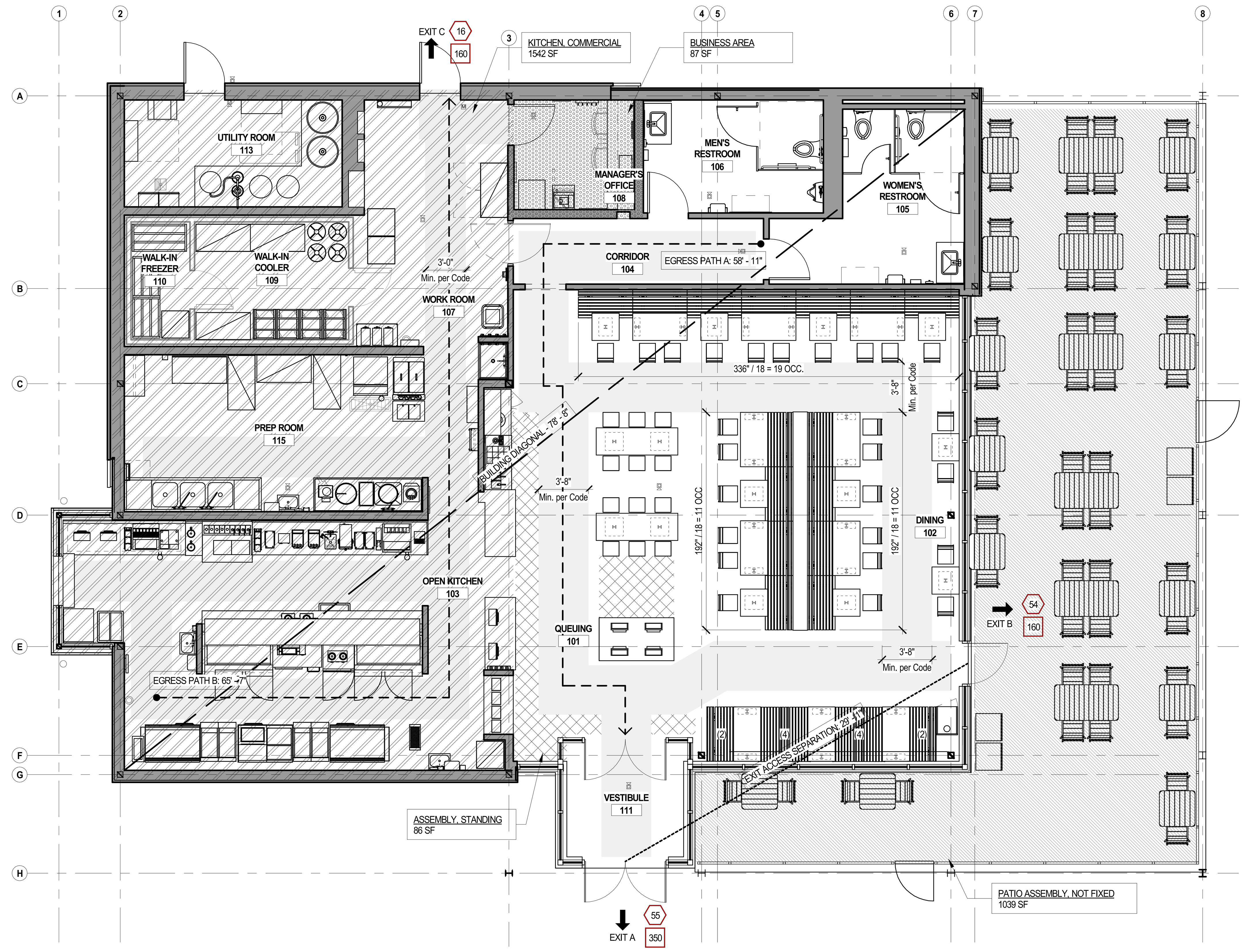


## EMERGENCY EGRESS & OCCUPANCY PLAN

3/16" = 1'-0" 2

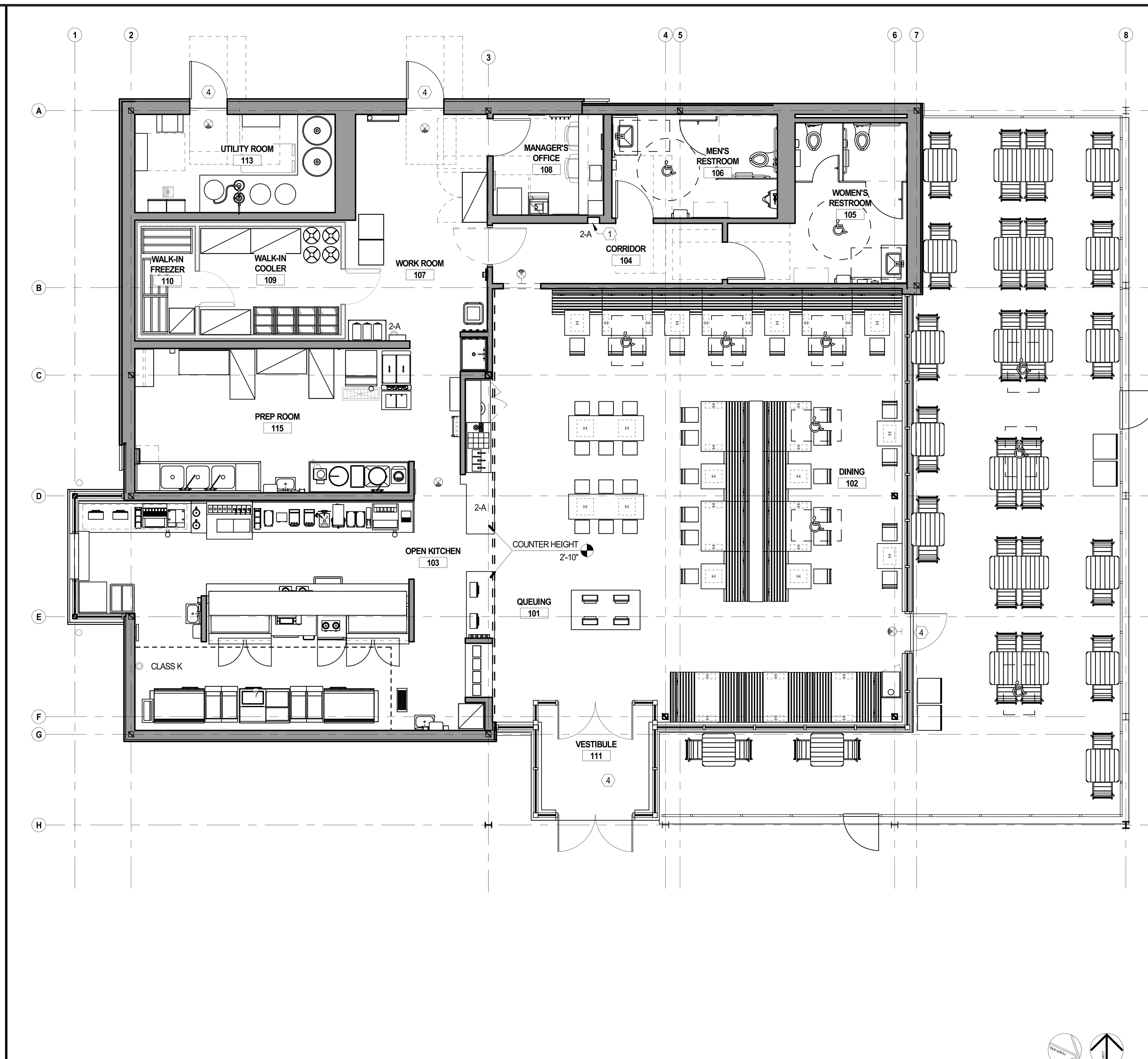


## ACCESSIBILITY & LIFE SAFETY ANALYSIS PLAN

3/16" = 1'-0" 1

## BUILDING CODES

**STATE BUILDING CODE:** 2018 INTERNATIONAL BUILDING CODE WITH ORDINANCE 8536
**FIRE / LIFE SAFETY CODE:** 2018 INTERNATIONAL FIRE CODE WITH ORDINANCE 8537
**ACCESSIBILITY CODE:** ICC/ANSI A117.1-2009. ACCESSIBLE AND USABLE BUILDINGS AND FACILITIES
**PLUMBING CODE:** 2018 INTERNATIONAL PLUMBING CODE
**FUEL GAS CODE:** 2018 INTERNATIONAL FUEL GAS CODE
**MECHANICAL CODE:** 2018 INTERNATIONAL MECHANICAL CODE
**ENERGY CODE:** ASHRAE 90.1 2016
**ELECTRICAL CODE:** 2017 NATIONAL ELECTRIC CODE

## BUILDING DEPARTMENT

**BUILDING DEPARTMENT ADDRESS:**

220 SE GREEN
LEE'S SUMMIT, MO 64063

T: 816.969.1200

HOURS OF OPERATION:
MONDAY-FRIDAY: 8:00AM - 5:00PM (EXCEPT HOLIDAYS)

## SUMMARY OF BUILDING / SEATS

NEW CONSTRUCTION 1 STORY BUILDING

HEIGHT: 16' T.O. ROOF, 20'-2" T.O. HIGHEST PARAPET

AREA: 3,360 SF

| SEAT COUNT | |
|---|---|
| INTERIOR SEATS | 125 |
| EXTERIOR SEATS | 50 |
| TOTAL SEATS | 175 |
| **SQUARE FOOTAGE** | |
| INTERIOR SF | 3360 SF |
| EXTERIOR SF | 1039 SF |
| TOTAL SF | 4399 SF |

## TRAVEL DISTANCE CALCULATIONS

| TRAVEL PATH | TRAVEL DISTANCE |
|---|---|
| BUILDING DIAGONAL | 78' - 8" |
| EXIT ACCESS SEPARATION | 29' - 1" |
| PATH A | 58' - 1" |
| PATH B | 65' - 7" |

## CODE ANALYSIS

### GENERAL

| DESCRIPTION | CODE REF. | REQUIREMENT | PROPOSED |
|---|---|---|---|
| CONSTRUCTION TYPE | TABLE 601 | - | II-B |
| USE GROUP | 303.3 | A-2 | A-2 |
| SPRINKLERED | 903.2.1.2 | NOT REQUIRED IF FIRE AREA IS LESS THAN 5,000 SF | YES |

### DESIGN OCCUPANCY LOAD

| DESCRIPTION | CODE REF. | AREA | FACTOR (SQ FT / person) | TOTAL OCCUPANTS |
|---|---|---|---|---|
| ASSEMBLY, STANDING | TABLE 1004.1.2 | 86 SF | 5 NET | 18 OCCUPANTS |
| ASSEMBLY, SEATING - FIXED | 1004.6 | - | 1 PER 24" OF BOOTH SEAT LENGTH, 1 PER 18" BENCH LENGTH | 53 FIXED SEATS |
| ASSEMBLY, SEATING - NOT FIXED | TABLE 1004.5 | - | 15 NET | 38 LOOSE SEATS |
| KITCHENS, COMMERCIAL | NFPA 101 TABLE 7.3.1.2 | 1542 SF | 200 GROSS | 8 (ACTUAL: 15 EMPLOYEES) |
| BUSINESS AREA | TABLE 1004.1.2 | 87 SF | 150 GROSS | 1 OCCUPANT |
| PATIO SEATING - FIXED | 1004.4 | - | 1 PER 24" OF BOOTH SEAT LENGTH, 1 PER 18" BENCH LENGTH | - |
| PATIO SEATING - NOT FIXED | TABLE 1004.5 | 1039 SF | 15 NET | 50 LOOSE SEATS (ACTUAL: 70 OCCUPANTS) |
| TOTAL OCCUPANCY COUNTS | ACCESSIBLE SEATING REQUIREMENT: IBC 2018 - 1108.2.9.1<br>INTERIOR: 90 SEATS @ 5% ACCESSIBLE 5 ACCESSIBLE SEATS<br>EXTERIOR: 50 SEATS @ 5% ACCESSIBLE 3 ACCESSIBLE SEATS | | INTERIOR OCCUPANT LOAD:<br>EXTERIOR OCCUPANT LOAD:<br>TOTAL DESIGN OCCUPANT LOAD:<br>PLUMBING FIXTURE COUNT DESIGNED FOR: | 125 OCCUPANTS<br>70 OCCUPANTS<br>195 OCCUPANTS<br>300 OCCUPANTS (SEE PLUMBING FACILITIES BELOW) |

### EGRESS

| DESCRIPTION | CODE REF. | REQUIREMENT | PROPOSED |
|---|---|---|---|
| REQUIRED NUMBER OF EXITS | TABLE 1006.2.1 | 2 EXITS SHALL BE PROVIDED WHERE THE DESIGN OCCUPANT LOAD EXCEEDS 49 | 3 EXITS |
| MAXIMUM TRAVEL DISTANCE | TABLE 1017.2 | SPRINKLERED: 250' | 65' - 7" |
| EXIT ACCESS DOORWAY ARRANGEMENT | 1007.1.1 | 78' - 8" MAX OVERALL DIM / 3 = 26'-4" MIN SEPARATION | 29' - 1" |
| MINIMUM AISLE WIDTH | 1029.9.1 | 42" AISLES HAVING SEATS ON BOTH SIDES; 36" WHEN AISLE SERVES LESS THAN 50 SEATS | 36" MIN |
| CORRIDOR WIDTH | TABLE 1020.2 | 44" MIN | 44" MIN |
| DOOR WIDTH | 1010.1.1 | 32" MIN CLR OPENING (OR 36" DOOR) | 32" MIN CLR OPENING (36" DOOR) |

### FINISHES

| DESCRIPTION | CODE REF. | REQUIREMENT | PROPOSED |
|---|---|---|---|
| INTERIOR WALL & CEILING FINISH CLASSIFICATION | TABLE 803.11 | ROOMS AND ENCLOSED SPACES (SPRINKLERED): CLASS C | CLASS C |

### FIRE RESISTIVE SEPARATIONS

| DESCRIPTION | CODE REF. | REQUIREMENT | PROPOSED |
|---|---|---|---|
| BUILDING ELEMENTS | TABLE 601 / 602 | PRIMARY STRUCTURAL FRAME 0 HR<br>BEARING WALLS - EXTERIOR 0 HR<br>BEARING WALLS - INTERIOR 0 HR<br>NON BEARING WALLS & PARTITIONS - EXTERIOR:<br>5 ≤ X < 10: 0 HR<br>X ≥ 30: 0 HR<br>NON BEARING WALLS & PARTITIONS - INTERIOR: 0 HR<br>FLOOR CONSTRUCTION 0 HR<br>ROOF CONSTRUCTION 0 HR | PRIMARY STRUCTURAL FRAME 0 HR<br>BEARING WALLS - EXTERIOR 0 HR<br>BEARING WALLS - INTERIOR 0 HR<br>NON BEARING WALLS & PARTITIONS - EXTERIOR:<br>5 ≤ X < 10: 0 HR<br>X ≥ 30: 0 HR<br>NON BEARING WALLS & PARTITIONS - INTERIOR: 0 HR<br>FLOOR CONSTRUCTION 0 HR<br>ROOF CONSTRUCTION 0 HR |
| REQ'D SEPARATION OF OCCUPANCIES (HOURS) | TABLE 508.4 | 1 HR BETWEEN ASSEMBLY AND BUSINESS OR MERCANTILE IF SPRINKLERED | N/A |

### PLUMBING FACILITIES

| DESCRIPTION | CODE REF. | REQUIREMENT | PROPOSED |
|---|---|---|---|
| WATER CLOSETS | TABLE 2902.1 | MALE: 1 PER 75; FEMALE: 1 PER 75 | 1 MALE; 1 URINAL; 2 FEMALE |
| LAVATORIES | TABLE 2902.1 | 1 PER 200 | 1 MALE; 1 FEMALE |
| OTHER | TABLE 2902.1 | 1 SERVICE SINK | 1 SERVICE SINK |
| DRINKING FOUNTAINS | IPC 2018 410.4 | WHERE WATER IS SERVED IN RESTAURANTS, DRINKING FOUNTAINS SHALL NOT BE REQUIRED | 0 (WATER IS SERVED IN RESTAURANT) |

## ACCESSIBLE CLEARANCES

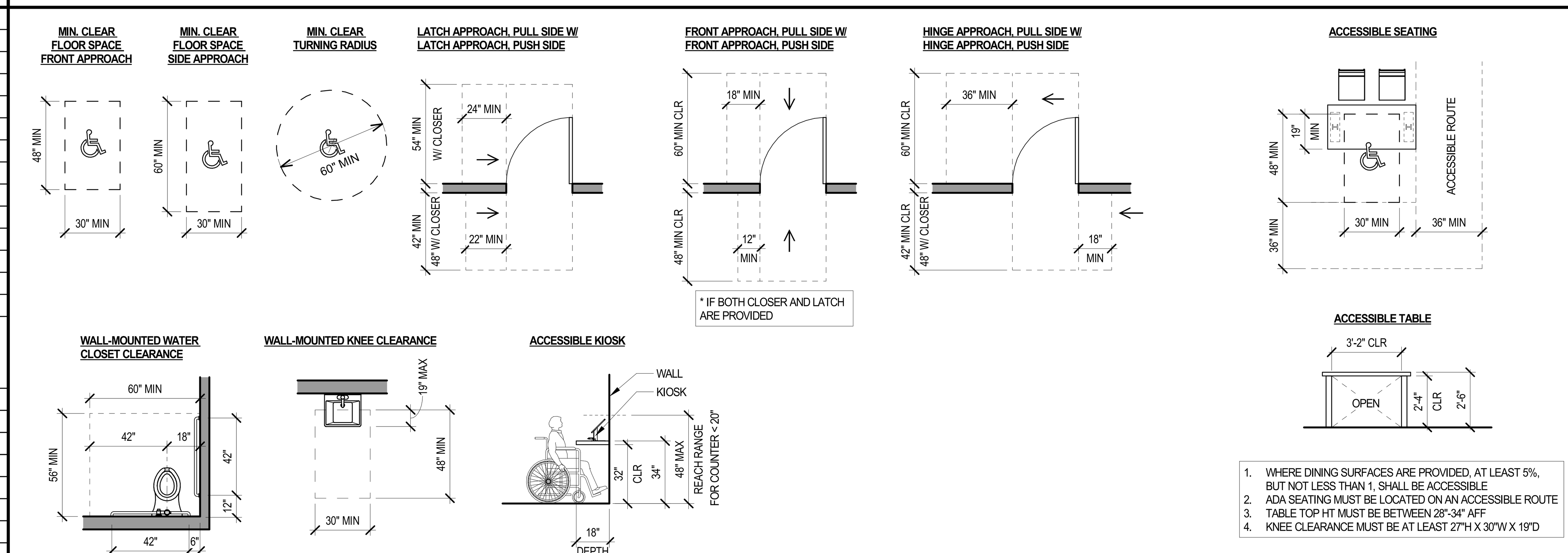


1. WHERE DINING SURFACES ARE PROVIDED, AT LEAST 5%, BUT NOT LESS THAN 1, SHALL BE ACCESSIBLE
2. ADA SEATING MUST BE LOCATED ON AN ACCESSIBLE ROUTE
3. TABLE TOP HT MUST BE BETWEEN 28"-34" AFF
4. KNEE CLEARANCE MUST BE AT LEAST 27"H X 30"W X 19"D

## SYMBOL LEGEND

| SYMBOL | DESCRIPTION | SYMBOL | DESCRIPTION |
|---|---|---|---|
| | NEW PARTITION (FULL HEIGHT) | | CLEAR EGRESS PATH 3'-0" TYP, U.N.O. |
| | NEW PARTITION (PARTIAL HEIGHT - SEE ELEV. FOR MORE INFO) | | OCCUPANCY LOAD HATCH ASSEMBLY (STANDING) 1 OCCUPANT PER 5 SF (NET) |
| | PREFAB WALLS BY KEC | | OCCUPANCY LOAD HATCH KITCHEN, COMMERCIAL 1 OCCUPANT PER 200 SF (GROSS) |
| | NEW DOOR | | OCCUPANCY LOAD HATCH BUSINESS AREA 1 OCCUPANT PER 150 SF (NET) |
| 01 | KEYNOTE | | OCCUPANCY LOAD HATCH ASSEMBLY (LOOSE) - EXTERIOR 1 OCCUPANT PER 15 SF (NET) |
| FE | FIRE EXTINGUISHER (SEE FIRE EXTINGUISHER SCHEDULE) | | EMERGENCY EXIT |
| | FIRE ALARM DEVICE; REFER TO FP | 00 | REQUIRED CAPACITY OF MEANS OF EGRESS BASED ON OCCUPANT LOAD |
| | EXIT SIGN | 000 | MAXIMUM CAPACITY OF MEANS OF EGRESS |
| | PULL STATION | | |

## FIRE EXTINGUISHER SCHEDULE

**(VERIFY WITH LOCAL FIRE DEPARTMENT)**
(PER IBC 906 AND NFPA 1-13.6)

| SYMBOL | DESCRIPTION |
|---|---|
| 2-A | TYPE 2-A EXTINGUISHER (PER NFPA 10):<br>FOR CLASS A HAZARDS IN ORDINARY (MODERATE) HAZARD OCCUPANCY, (1) EXTINGUISHER PROVIDES 1,500 SF OF PROTECTION IN DINING AREAS - DISTANCE TO EXTINGUISHER NOT TO EXCEED 75'-0" |
| K | TYPE K EXTINGUISHER (PER NFPA 10):<br>PROVIDED FOR HAZARDS WHERE THERE IS A POTENTIAL FOR FIRES INVOLVING COMBUSTIBLE COOKING MEDIA - DISTANCE TO EXTINGUISHER NOT TO EXCEED 30'-0" |

## EGRESS COMPONENT CALCULATIONS

**EXIT A:** 70" CLEAR WIDTH
70 / .2 = 350 MAX OCC
(2) DOORS W/ PANIC HARDWARE

**EXIT B:** 32" CLEAR WIDTH
32 / .2 = 160 MAX OCC
(1) DOOR W/ PANIC HARDWARE

**EXIT C:** 32" CLEAR WIDTH
32 / .2 = 160 MAX OCC
(1) DOOR W/ PANIC HARDWARE

## KEYNOTES

1. RECESSED FIRE EXTINGUISHER CABINET.
2. FIRE EXTINGUISHER LOCATED UNDER COUNTER
3. SURFACE MOUNTED FIRE EXTINGUISHER
4. ACCESSIBLE ENTRANCE WITH LEVEL ENTRY

## GENERAL NOTES

A. ALL EXIT DOORS SHALL BE OPERABLE FROM INSIDE WITHOUT USE OF A KEY OR ANY SPECIAL KNOWLEDGE OR EFFORT. SPECIAL LOCKING DEVICES SHALL BE OF AN APPROVED TYPE.
B. DOOR MUST OPEN OVER A LANDING NOT MORE THAN 1/2" BELOW THRESHOLD & THE THRESHOLD SHALL BE BEVELED SUCH THAT THERE IS A 1/4" MAX DROP
C. GC TO VERIFY AND COORDINATE FIRE EXTINGUISHER TYPES, LOCATIONS & QUANTITIES WITH LOCAL FIRE PREVENTION OFFICIAL AND OWNER PRIOR TO INSTALLATION.

Bergmeyer
BOS - 51 Sleeper St. 6th Floor Boston, MA 02210 617.542.1025
LA - 800 South Figueroa St. Suite 1080 Los Angeles, CA 90017 212.337.1090
www.bergmeyer.com

CONSULTANTS:

SEAL/ SIGNATURE:

| NO. | BY | DATE | DESCRIPTION |
|---|---|---|---|
| | | 2021-01-11 | PERMIT/BID SET |
| | | 2020-12-21 | 75% SET |

SHAKE SHACK

SHAKE SHACK - LEE'S SUMMIT MO

2051 NW LOWENSTEIN DRIVE
LEE'S SUMMIT, MISSOURI 64081
SHACK #1348

PERMIT/BID SET

CODE ANALYSIS, OCCUPANCY & EGRESS

DRAWN BY: CS & WQL
CHECKED BY: JS
JOB NO: 20068.00

T004

C:\Users\qlevine\Documents\068_Shake Shack-Lee's Summit_Central_qlevine@bergmeyer.com.rvt
1/11/2021 6:04:02 PM

RELEASE FOR CONSTRUCTION
AS NOTED ON PLANS REVIEW
DEVELOPMENT SERVICES
LEE'S SUMMIT, MISSOURI
03/10/2021

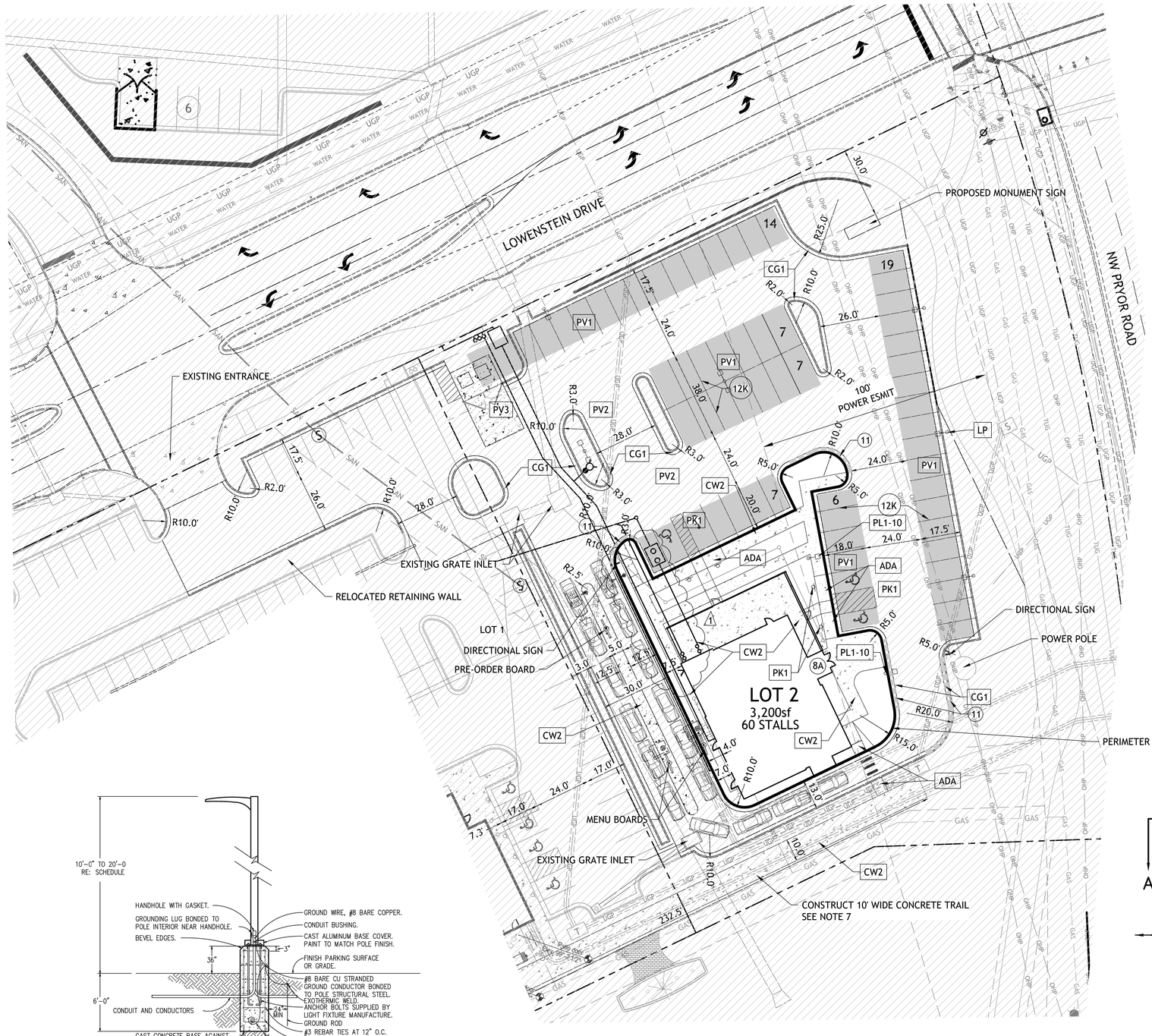


## SITE DATA

| | |
|---|---|
| TOTAL SITE | 1.63ac (71,216sf) |
| TOTAL IMPERVIOUS AREA | 34,469sf |
| OPEN SPACE | 36,747sf (51.5%) |
| TOTAL BUILDING | 3,200sf |
| FAR | 0.044 |
| TOTAL REQUIRED | |
| 3,200 @ 14/1000 | 45 |
| PARKING PROVIDED | 61* |

* THE REQUIRED PARKING IS SUPPLEMENTED BY OVERALL SHARED PARKING PROVISIONS.

## CONSTRUCTION NOTES:

1. COORDINATE START-UP AND ALL CONSTRUCTION ACTIVITIES WITH OWNER.

2. CONSTRUCTION METHODS AND MATERIALS NOT SPECIFIED IN THESE PLANS ARE TO MEET OR EXCEED THE STANDARD SPECIFICATIONS.

3. ALL CONSTRUCTION WORK AND UTILITY WORK OUTSIDE OF PROPERTY BOUNDARIES SHALL BE PERFORMED IN COOPERATION WITH AND IN ACCORDANCE WITH REGULATIONS OF THE AUTHORITIES CONCERNED.

4. PUBLIC CONVENIENCE AND SAFETY: THE CONTRACTOR SHALL CONDUCT THE WORK IN A MANNER THAT WILL INSURE, AS FAR AS PRACTICABLE, THE LEAST OBSTRUCTION TO TRAFFIC, AND SHALL PROVIDE FOR TI-1E CONVENIENCE AND SAFETY OF THE GENERAL PUBLIC AND RESIDENTS ALONG AND ADJACENT TO STREETS IN THE CONSTRUCTION AREA.

5. ALL DIMENSIONS SHOWN ARE TO THE BACK OF CURB UNLESS OTHERWISE NOTED.

6. ACCESSIBLE STALLS SHOWN WITH A "VAN" SHALL BE 16'-0" MIN. AND SHALL HAVE A SIGN DESIGNATING "VAN-ACCESSIBLE". SEE DETAIL102.

7. CONCRETE TRAIL TO BE 6" CONCRETE ON 6" TYPE 5 MoDOT BASE ROCK

## NOTE:

1. CONTRACTOR SHALL REFER TO ARCHITECTURAL PLANS FOR EXACT LOCATIONS AND DIMENSIONS OF ENTRANCE. SLOPED PAVING, EXIT PORCHES AND RAMPS, PRECISE BUILDING DIMENSIONS AND EXACT BUILDING UTILITY ENTRANCE LOCATIONS.

2. THESE PLANS HAVE NOT BEEN VERIFIED WITH FINAL ARCHITECTURAL CONTRACT DRAWINGS. CONTRACTOR SHALL VERIFY AND NOTIFY THE ENGINEER OF ANY DISCREPANCIES. CONTRACTOR IS FULLY RESPONSIBLE FOR REVIEW AND COORDINATION OF ALL DRAWINGS AND CONTRACTOR DOCUMENTS.

3. ALL DIMENSIONS ARE PERPENDICULAR TO PROPERTY LINE.

4. ACTUAL SIGN LOCATIONS TO BE COORDINATED WITH CONSTRUCTION MANAGER.

LEGEND

CONSTRUCTION BY OTHERS

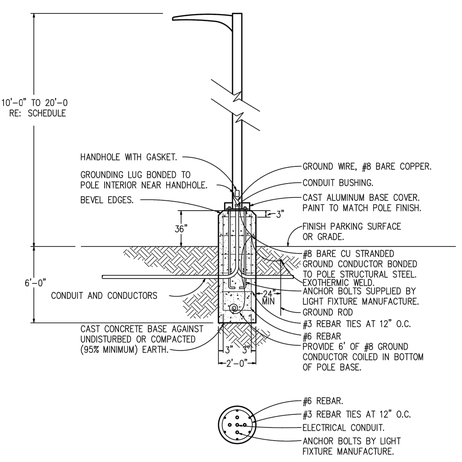


## 1 LIGHT POLE BASE DETAIL
NO SCALE

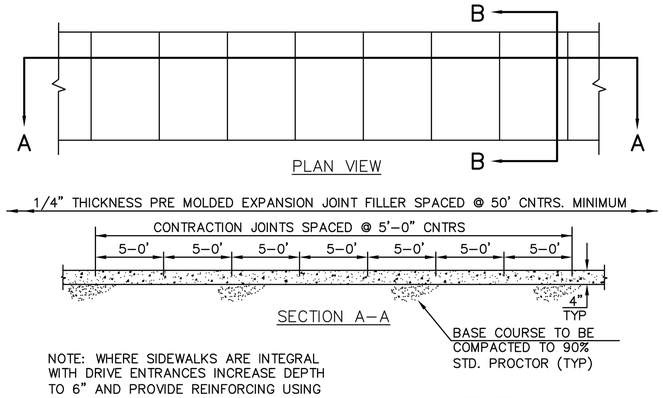


## CONCRETE SIDEWALK CW2

NOTE: CONCRETE SHALL BE CLASS A WITH f'c = 3000 PSI.

## LIGHTING FIXTURE SCHEDULE

| MARK | MANUFACTURER * | FIXTURE DESCRIPTION | MODEL NUMBER | MOUNTING | COLOR | LAMP QTY | LAMP TYPE | LAMP CODE | DRIVE CURRENT (QUANTITY/TYPE) | VOLTS | WATTS PER/POLE | NOTES |
|---|---|---|---|---|---|---|---|---|---|---|---|---|
| PL1 | McGRAW-EDISON | DARK SKY COMPLIANT AREA LIGHT FIXTURE WITH DIRECT ARM MOUNT AT 90 DEGREES, 10FT ABOVE FINISHED GRADE, 8FT ALUMINUM POLE WITH VIBRATION DAMPER | FIXTURE: GLEON-AF-01-LED-E1-SL4-BZ POLE: SSA4M8WCN10V | POLE | 4000K | 1 PER POLE | LED | – | (1) 1000mA | MVOLT | 59 | 1-2 |


Bergmeyer
LA –
BOS –
800 South Figueroa St.
Suite 1080
Los Angeles, CA 90017
213.337.1080
51 Sleeper St.
5th Floor
Boston, MA 02210
617.542.1025
www.bergmeyer.com


CONSULTANTS:
SM Engineering
5507 High Meadow Circle
Manhattan Kansas, 66503
smcivilengr@gmail.com
785.341.9747

SEAL/ SIGNATURE:

STATE OF MISSOURI
SAM MOORE
NUMBER PE-2004020233
PROFESSIONAL ENGINEER
03-10-21

REVISIONS
3-9-21 ADDENDUM 1

| NO. | BY | DATE | DESCRIPTION |
|---|---|---|---|
| 1 | | 2021-03-09 | ADDENDUM #1 |
| 0 | | 2021-01-11 | PERMIT/BID SET |
| | | 2021-3-4 | 75% SET |

SHAKE SHACK

SHAKE SHACK - LEE'S SUMMIT MO

2051 NW LOWENSTEIN DRIVE
LEE'S SUMMIT, MISSOURI 64081
SHACK #1348

PERMIT SET

SITE PLAN

DRAWN BY: GO
CHECKED BY: SM
JOB NO: 20068.00

C-1

RELEASE FOR CONSTRUCTION
AS NOTED ON PLANS REVIEW
DEVELOPMENT SERVICES
LEE'S SUMMIT, MISSOURI
03/10/2021

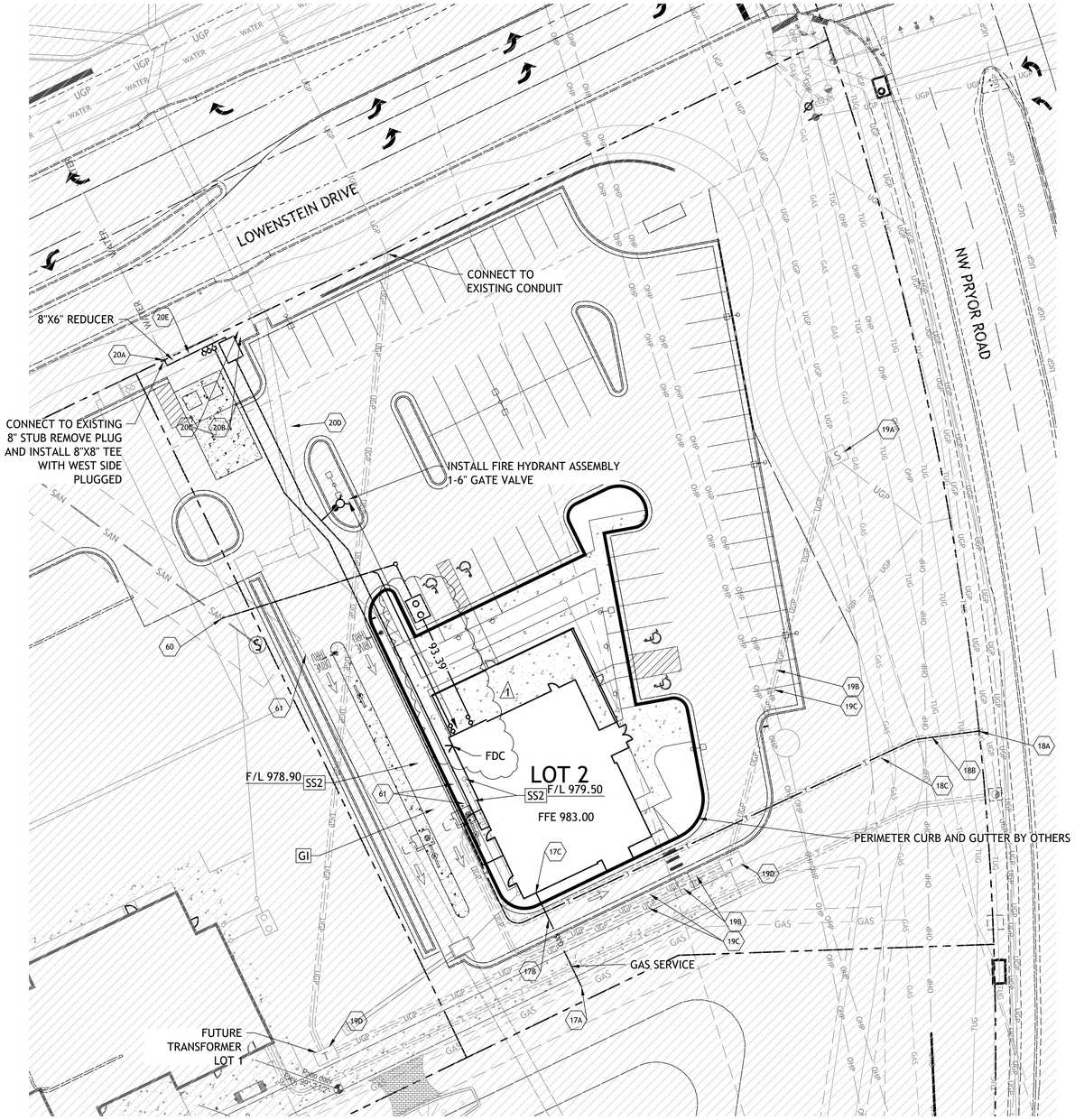


## UTILITY NOTES:

1. ALL UTILITY AND STORM SEWER TRENCHES CONSTRUCTED UNDER AREAS THAT RECEIVE PAVING SHALL BE BACKFILLED TO 18 INCHES ABOVE THE TOP OF THE PIPE WITH SELECT GRANULAR MATERIAL PLACED ON EIGHT-INCH LIFTS, AND COMPACTED TO 95% MODIFIED PROCTOR DENSITY.

2. CONTRACTOR SHALL NOT OPEN, TURN OFF, INTERFERE WITH, OR ATTACH ANY PIPE OR HOSE TO OR TAP ANY WATER MAIN BELONGING TO THE CITY UNLESS DULY AUTHORIZED TO DO SO BY THE CITY. ANY ADVERSE CONSEQUENCE OF ANY SCHEDULED OR UNSCHEDULED DISRUPTIONS OF SERVICE TO THE PUBLIC ARE TO BE THE LIABILITY OF THE CONTRACTOR. SM ENGINEERING AND OWNER ARE TO BE HELD HARMLESS.

3. ALL WATER AND SANITARY SEWER SYSTEMS THAT ARE TO BE PUBLIC LINES SHALL BE CONSTRUCTED IN ACCORDANCE WITH SPECIFICATIONS PREVIOUSLY APPROVED BY THE CITY OF LEE'S SUMMIT AND THE STATE OF MISSOURI AND SHALL BE INSPECTED BY THE CITY. IT IS THE CONTRACTOR'S RESPONSIBILITY TO ASSURE THAT THIS INSPECTION OCCURS.

4. LOCATIONS SHOWN FOR PROPOSED WATER LINES ARE APPROXIMATE. VARIATIONS MAY BE MADE, WITH APPROVAL OF THE ENGINEER, TO AVOID CONFLICTS.

5. CONTRACTOR TO INSTALL TRACING TAPE ALONG ALL NON-METALLIC WATER MAINS AND SERVICE LINES PER SPECIFICATIONS.

6. CONTRACTOR SHALL EXPOSE EXISTING UTILITIES AT LOCATIONS OF POSSIBLE CONFLICT AND POINTS OF CONNECTION PRIOR TO ANY CONSTRUCTION OF NEW UTILITIES.

7. WATER LINES SHALL HAVE A MINIMUM COVER OF 42 INCHES. ALL VALVES ON MAINS AND FIRE HYDRANT LEADS SHALL BE WITH VALVE BOX ASSEMBLIES. THE SIZE OF VALVE BOX ASSEMBLY TO BE INSTALLED IS DETERMINED BY THE TYPE AND SIZE OF VALVE. VALVE BOX CAPS SHALL HAVE THE WORD "WATER".

8. A MINIMUM HORIZONTAL DISTANCE OF 10 FEET SHALL BE MAINTAINED BETWEEN PARALLEL WATER AND SANITARY SEWER LINES. WHEN IT IS NECESSARY FOR ANY WATER LINE TO CROSS A SANITARY SEWER LINE, THE SEWER LINE SHALL BE CONSTRUCTED OF DUCTILE IRON PIPE AT LEAST 10 FEET EITHER SIDE OF THE WATER LINE UNLESS THE WATER LINE IS AT LEAST 2 FEET CLEAR DISTANCE ABOVE THE SANITARY SEWER LINE.

9. INSTALL 2" TYPE "K" COPPER FROM THE MAIN TO THE METER AND EITHER TYPE "K" OR POLYETHYLENE PLASTIC TUBING (PE 3608) FROM METER TO STOP AND WASTE VALVE INSIDE BUILDING.

10. CONTRACTOR RESPONSIBLE FOR PROVIDING CASEMENT FOR ELECTRICAL SERVICE PER KCP&L

## NOTES

| | | |
|---|---|---|
| 17A | POINT OF CONNECTION - GAS SERVICE |
| 17B | GAS SERVICE (BY GAS COMPANY) |
| 17C | GAS METER |
| 18A | POINT OF CONNECTION - TELEPHONE SERVICE - COORDINATE WITH TELEPHONE COMPANY |
| 18B | UNDERGROUND TELEPHONE SERVICE PER LOCAL TELEPHONE COMPANY |
| 18C | 2-2" CONDUIT INSTALLED BY CONTRACTOR - TELEPHONE SERVICE |
| 19A | POINT OF CONNECTION - ELECTRICAL SERVICE |
| 19B | ELECTRICAL SERVICE (SEE NOTE 10) |
| 19C | 4" CONDUIT INSTALLED BY CONTRACTOR - ELECTRIC SERVICE |
| 19D | TRANSFORMER - PER EVERGY DETAIL 700-103 |
| 20A | POINT OF CONNECTION - WATER SERVICE |
| 20B | 2" TAP WITH 2" SERVICE LINE |
| 20C | 2" METER |
| 20D | 6" FIRE LINE |
| 60 | 6" SANITARY SEWER SERVICE LINE SDR-26 PVC CONNECTION SHALL BE A CUT-IN WYE |
| 61 | 4" SANITARY SEWER SERVICE LINE SDR 26 PVC |
| 20E | INSTALL 6" BACKFLOW PREVENTION ASSEMBLY IN 8'X6' VAULT OR AS REQUIRED PER CLEARANCE SEE DETAIL WAT-5 |

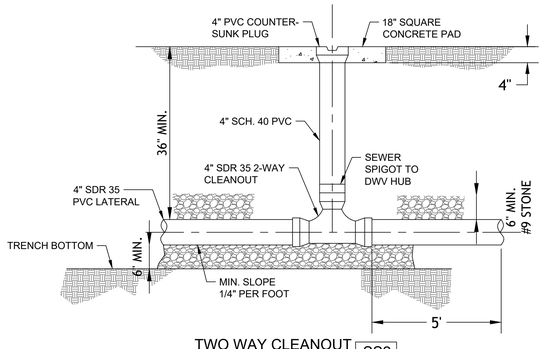


TWO WAY CLEANOUT SS2

## LEGEND

CONSTRUCTION BY OTHERS

## UTILITY STATEMENT:

THE UNDERGROUND UTILITIES SHOWN HEREON ARE FROM FIELD SURVEY INFORMATION OF ONE-CALL LOCATED UTILITIES, FIELD SURVEY INFORMATION OF ABOVE GROUND OBSERVABLE EVIDENCE, AND/OR THE SCALING AND PLOTTING OF EXISTING UTILITY MAPS AND DRAWINGS AVAILABLE TO THE SURVEYOR AT THE TIME OF SURVEY. THE SURVEYOR MAKES NO GUARANTEE THAT THE UNDERGROUND UTILITIES SHOWN COMPRISE ALL SUCH UTILITIES IN THE AREA, EITHER IN SERVICE OR ABANDONED. FURTHERMORE, THE SURVEYOR DOES NOT WARRANT THAT THE UNDERGROUND UTILITIES SHOWN ARE IN THE EXACT LOCATION INDICATED ALTHOUGH HE DOES CERTIFY THAT THEY ARE LOCATED AS ACCURATELY AS POSSIBLE FROM INFORMATION AVAILABLE. THE SURVEYOR HAS NOT PHYSICALLY LOCATED THE UNDERGROUND UTILITIES BY EXCAVATION UNLESS OTHERWISE NOTED ON THIS SURVEY.

1"=20'
0 10' 20'

Bergmeyer
BOS
51 Sleeper St.
6th Floor
Boston, MA 02210
617.542.1025
LA
800 South Figueroa St.
Suite 1080
Los Angeles, CA 90017
212.337.1080
www.bergmeyer.com

CONSULTANTS:
SM Engineering
5507 High Meadow Circle
Manhattan Kansas, 66503
smcivilengr@gmail.com
785.341.9747

SEAL/ SIGNATURE:

STATE OF MISSOURI
SAMUEL D. MCCULLOUGH
NUMBER PE-2004027750
PROFESSIONAL ENGINEER
03-9-21

REVISIONS
3-9-21 ADDENDUM 1

| NO. | BY | DATE | DESCRIPTION |
|---|---|---|---|
| 1 | | 2021-03-09 | ADDENDUM #1 |
| 0 | | 2021-01-11 | PERMIT/BID SET |
| | | 2021-3-4 | 75% SET |

SHAKE SHACK

SHAKE SHACK - LEE'S SUMMIT MO

2051 NW LOWENSTEIN DRIVE
LEE'S SUMMIT, MISSOURI 64081
SHACK #1348

PERMIT SET

UTILITY PLAN

| | |
|---|---|
| DRAWN BY: | GO |
| CHECKED BY: | SM |
| JOB NO: | 20068.00 |

C-2

RELEASE FOR CONSTRUCTION
AS NOTED ON PLANS REVIEW
DEVELOPMENT SERVICES
LEE'S SUMMIT, MISSOURI
03/10/2021

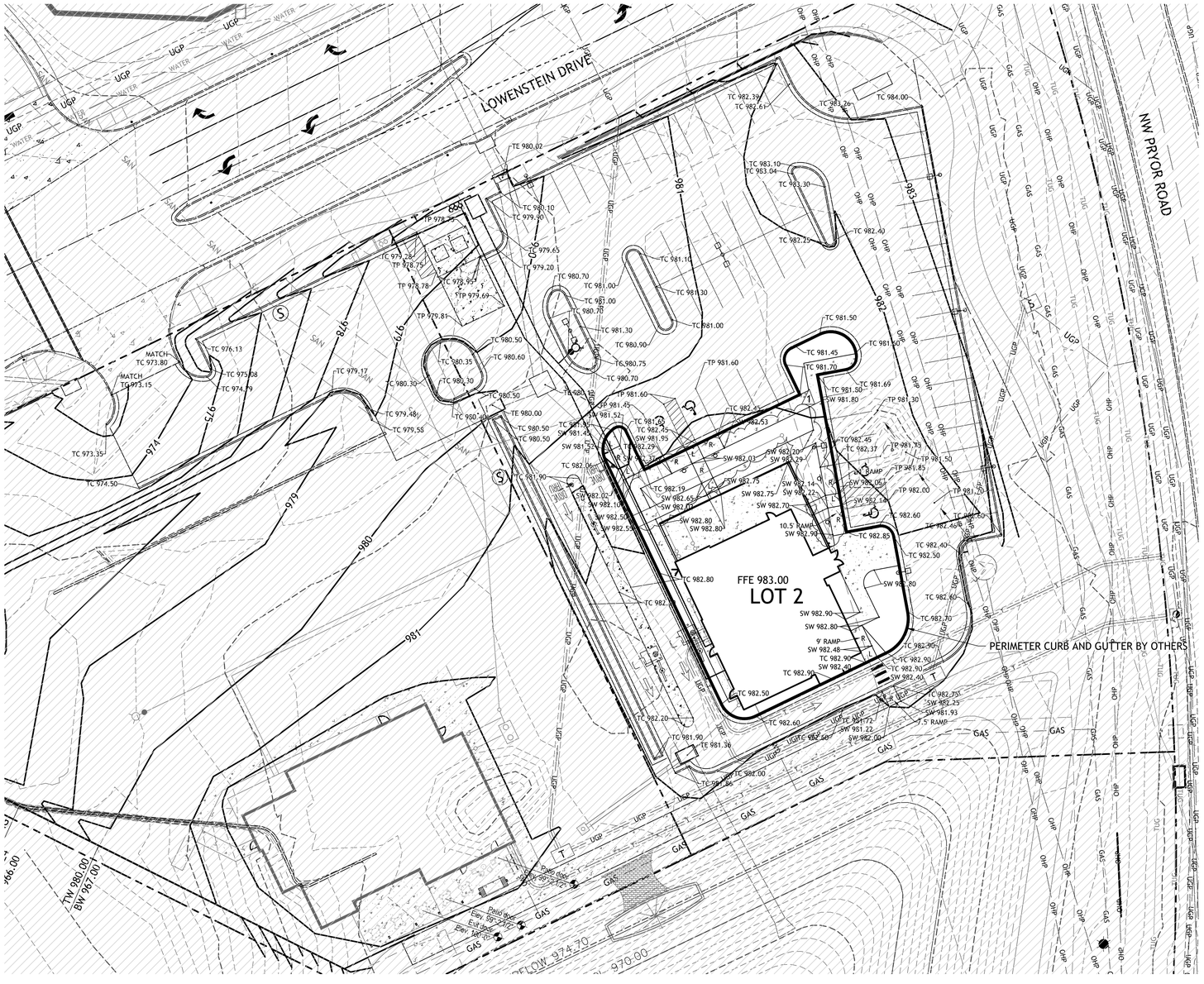


## GRADING NOTES:

1. EARTHWORK UNDER THE BUILDING SHALL COMPLY WITH THE PROJECT ARCHITECTURAL PLANS. OTHER FILL MATERIAL SHALL BE MADE IN LIFTS NOT TO EXCEED EIGHT INCHES DEPTH COMPACTED TO 95% STANDARD PROCTOR DENSITY. FILL MATERIAL MAY INCLUDE ROCK FROM ON-SITE EXCAVATION IF CAREFULLY PLACED SO THAT LARGE STONES ARE WELL DISTRIBUTED AND VOIDS ARE COMPLETELY FILLED WITH SMALLER STONES, EARTH, SAND OR GRAVEL TO FURNISH A SOLID EMBANKMENT. NO ROCK LARGER THAN THREE INCHES IN ANY DIMENSION NOR ANY SHALE SHALL BE PLACED IN THE TOP 12 INCHES OF EMBANKMENT.

2. AREAS THAT ARE TO BE CUT TO SUBGRADE LEVELS SHALL BE PROOF ROLLED WITH A MODERATELY HEAVY LOADED DUMP TRUCK OR SIMILAR APPROVED CONSTRUCTION EQUIPMENT TO DETECT UNSUITABLE SOIL CONDITIONS.

3. IN ALL AREAS OF EXCAVATION, IF UNSUITABLE SOIL CONDITIONS ARE ENCOUNTERED. A QUALIFIED GEOTECHNICAL ENGINEER SHALL RECOMMEND TO THE OWNER THE METHODS OF UNDERCUTTING AND REPLACEMENT OF PROPERLY COMPACTED, APPROVED FILL MATERIAL. ALL PROOF ROLLING AND UNDERCUTTING SHOULD BE PERFORMED DURING A PERIOD OF DRY WEATHER.

4. CONTRACTOR SHALL USE SILT FENCE OR OTHER MEANS OF CONTROLLING EROSION ALONG THE EDGE OF THE PROPERTY OR OTHER BOTTOM OF SLOPE LOCATIONS.

5. CONTRACTOR IS TO REMOVE AND DISPOSE OF ALL DEBRIS, RUBBISH AND OTHER MATERIALS RESULTING FROM PREVIOUS AND CURRENT DEMOLITION OPERATIONS.

6. THE CONTRACTOR SHALL TAKE ALL PRECAUTIONS NECESSARY TO AVOID PROPERTY DAMAGE TO ADJACENT PROPERTIES DURING THE CONSTRUCTION PHASES OF THIS PROJECT. THE CONTRACTOR WILL BE HELD SOLELY RESPONSIBLE FOR ANY DAMAGES TO THE ADJACENT PROPERTIES OCCURRING DURING THE CONSTRUCTION PHASES OF THIS PROJECT.

7. IT IS NOT THE DUTY OF THE ENGINEER OR THE OWNER TO REVIEW THE ADEQUACY OF THE CONTRACTOR'S SAFETY MEASURES, IN, ON OR NEAR THE CONSTRUCTION SITE AT ANY TIME DURING CONSTRUCTION.

8. PIPE LENGTHS ARE CENTER TO CENTER OF STRUCTURE OR TO END OF END SECTIONS.

9. HANDICAP STALLS SHALL MEET ADA REQUIREMENTS AND SHALL NOT EXCEED 2% SLOPE IN ANY DIRECTION AT THE BUILDING ENTRY AND ACCESSIBLE PARKING STALLS. SLOPES EXCEEDING 2.0% WILL BE REPLACED AT THE CONTRACTOR'S EXPENSE.

10. CONTRACTOR TO ADJUST DEPTHS OF EXISTING SERVICE LINES AS NECESSARY

11. ALL CONSTRUCTION TRAFFIC, TEMPORARY TRAFFIC CONTROL DEVICES AND PAVEMENT MARKINGS SHALL CONFORM TO REQUIREMENTS OF THE LATEST MANUAL OF UNIFORM TRAFFIC CONTROL DEVICES.

12. SITE BEING ROUGH GRADED TO 12.5" BELOW FINISHED GRADE

13. CONTRACTOR TO PLACE 8" LOW PERMEABILITY LVC FOR BUILDING PAD

LEGEND

CONSTRUCTION BY OTHERS

1"=20'
0 10' 20'


Bergmeyer

BOS
51 Sleeper St.
6th Floor
Boston, MA 02210
617.542.1025

LA
800 South Figueroa St.
Suite 1080
Los Angeles, CA 90017
212.337.1080

www.bergmeyer.com

CONSULTANTS:
SM Engineering
5507 High Meadow Circle
Manhattan Kansas, 66503
smcivilengr@gmail.com
785.341.9747


SEAL/ SIGNATURE:

STATE OF MISSOURI
SAM D. MARTIN
NUMBER 2013012729
PROFESSIONAL ENGINEER

REVISIONS
3-9-21 ADDENDUM 1

| NO. | BY | DATE | DESCRIPTION |
|---|---|---|---|
| 1 | | 2021-03-09 | ADDENDUM #1 |
| 0 | | 2021-01-11 | PERMIT/BID SET |
| | | 2020-3-4 | 75% SET |

SHAKE SHACK

SHAKE SHACK - LEE'S SUMMIT MO

2051 NW LOWENSTEIN DRIVE
LEE'S SUMMIT, MISSOURI 64081
SHACK #1348

PERMIT SET

GRADING PLAN

| | |
|---|---|
| DRAWN BY: | GO |
| CHECKED BY: | SM |
| JOB NO: | 20068.00 |

C-3

RELEASE FOR CONSTRUCTION
AS NOTED ON PLANS REVIEW
DEVELOPMENT SERVICES
LEE'S SUMMIT, MISSOURI

03/10/2021

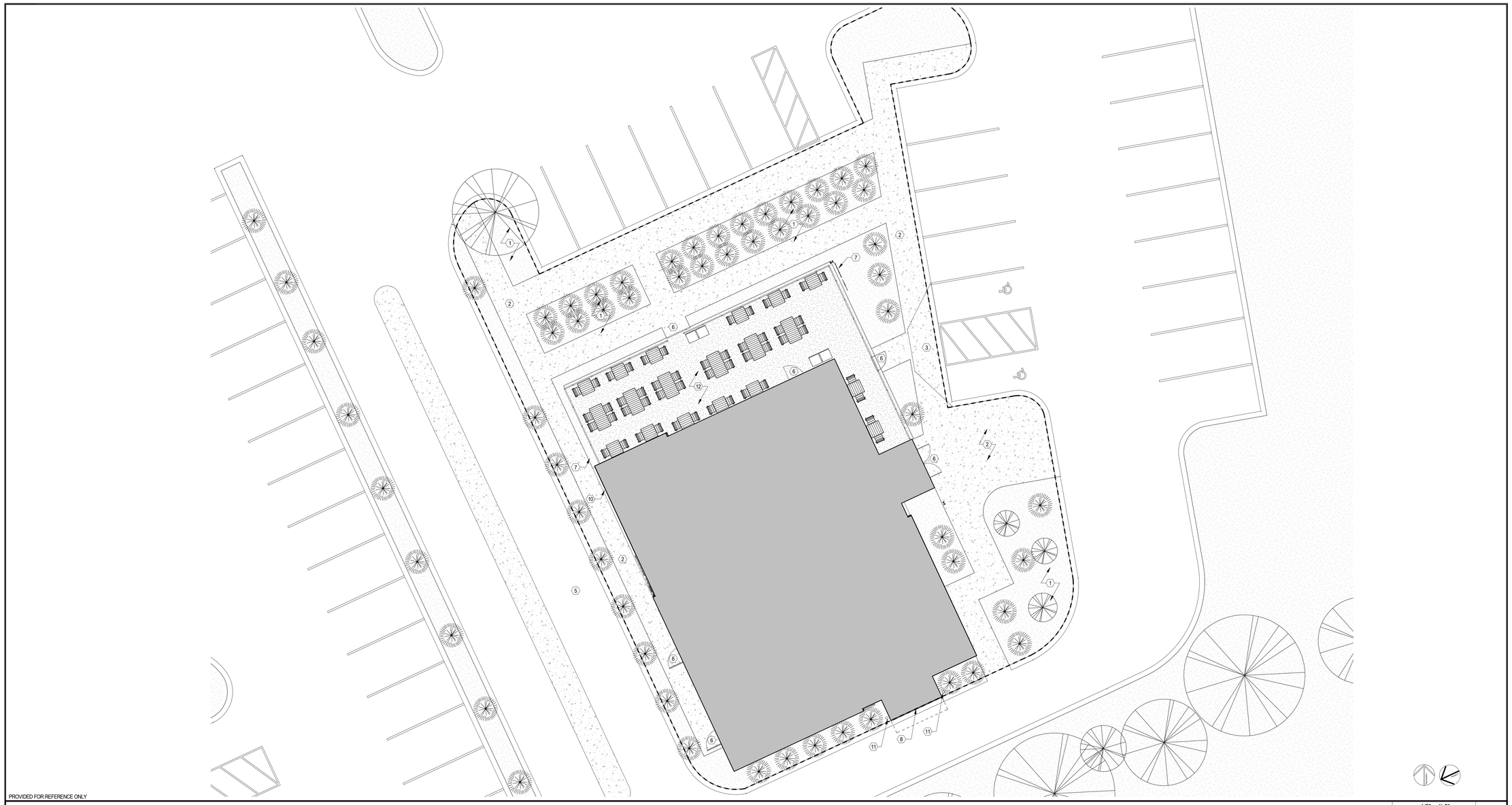

PROVIDED FOR REFERENCE ONLY

## SITE PLAN - ARCHITECTURAL

1/8" = 1'-0"
0'-0" 8'-0" 16'-0"

1

## NOT USED

## KEY PLAN - TRASH ENCLOSURE LOCATION

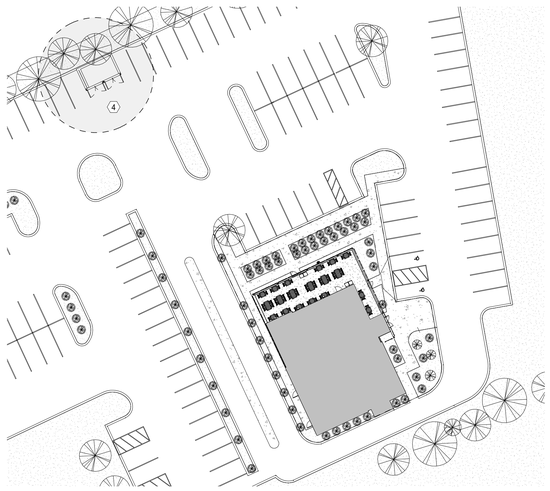

## KEYNOTES

1. NEW LANDSCAPED AREA
2. SIDEWALK AND PAVING
3. NEW FLUSH CURB
4. LOCATION OF TRASH ENCLOSURE; BY LANDLORD
5. LOCATION OF UNDERGROUND GREASE TRAP, BY LANDLORD
6. ACCESSIBLE ENTRY
7. EXTERIOR SIGN BAND AND CANOPY
8. DRIVE THRU WINDOW
9. SITE CAMERA TO BE INSTALLED BY GC WHILE THE SHACK IS UNDER CONSTRUCTION. CAMERA LOCATION TO BE COORDINATED WITH OWNER. CONTACT OWNER FOR ORDER PROCESS AND INSTALLATION PROCEDURE.
10. LOCATION OF NEW CO2 & RTI FILL BOXES. REFER TO A100
11. NEW BOLLARDS; REFER TO CIVIL
12. PATIO FURNITURE; REFER TO FURNITURE & EQUIPMENT PLAN

## SYMBOL LEGEND

| SYMBOL | DESCRIPTION |
|---|---|
| | NEW DOOR |
| 01 | KEYNOTE |
| | LANDSCAPED AREA; EXISTING TO REMAIN |
| | NOT IN CONTRACT |
| | CONSTRUCTION LIMIT LINE |

## GENERAL NOTES

A. REFER TO EXTERIOR ELEVATIONS FOR ADDITIONAL INFORMATION ON BUILDING ELEMENTS
B. REFER TO EXTERIOR ELEVATIONS AND E-SHEETS FOR ADDITIONAL INFORMATION ON EXTERIOR LIGHTING
C. ALL WORK WITHIN CONSTRUCTION LIMIT LINE IS THE RESPONSIBILITY OF THE TENANT GC. ALL WORK OUSTIDE OF THE CONSTRUCTION LIMIT LINE IS LANDLORD AND LANDLORD GC RESPONSIBILITY


Bergmeyer

BOS
51 Sleeper St.
6th Floor
Boston, MA 02210
617.542.1025

LA
800 South Figueroa St.
Suite 1060
Los Angeles, CA 90017
212.337.1090

www.bergmeyer.com


CONSULTANTS:

SEAL/ SIGNATURE:

| NO. | BY | DATE | DESCRIPTION |
|---|---|---|---|
| | | 2021-01-11 | PERMIT/BID SET |
| | | 2020-12-21 | 75% SET |

SHAKE SHACK

SHAKE SHACK - LEE'S SUMMIT MO

2051 NW LOWENSTEIN DRIVE
LEE'S SUMMIT, MISSOURI 64081
SHACK #1348

PERMIT/BID SET

ARCHITECTURAL SITE PLAN

| | |
|---|---|
| DRAWN BY: | CS & WQL |
| CHECKED BY: | JS |
| JOB NO: | 20068.00 |

AS101

1/11/2021 6:05:16 PM C:\Users\jdevine\Documents\008_Shake Shack Lee's Summit_Central_jdevine@bergmeyer.com.rvt

RELEASE FOR CONSTRUCTION
AS NOTED ON PLANS REVIEW
DEVELOPMENT SERVICES
LEE'S SUMMIT, MISSOURI
03/10/2021

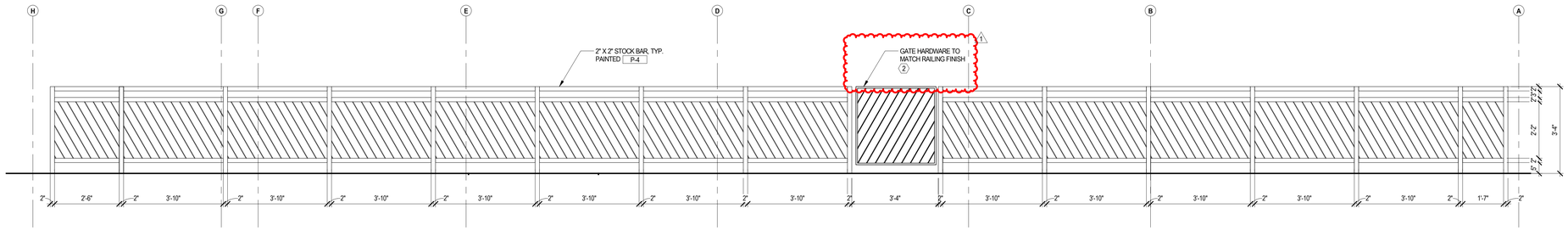


## EXTERIOR PATIO ELEVATION - WEST

1/2" = 1'-0" — 6

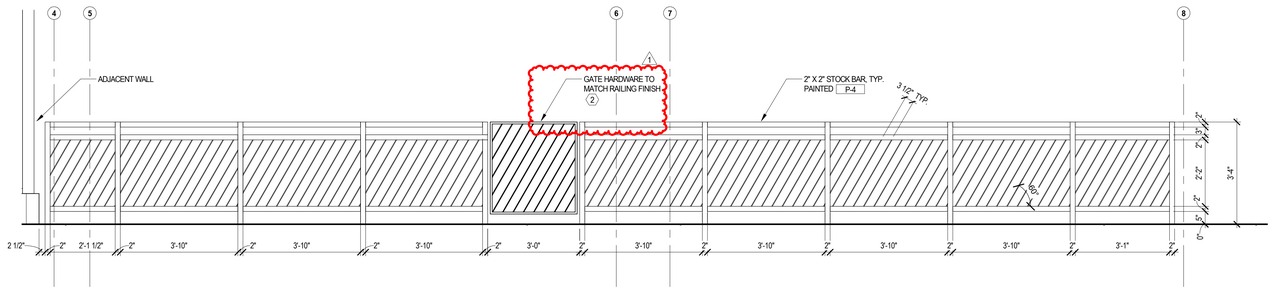


## EXTERIOR PATIO ELEVATION - SOUTH

1/2" = 1'-0" — 5

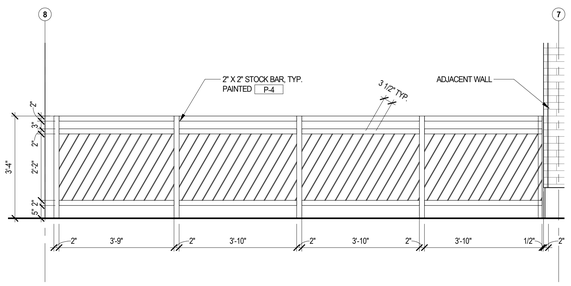


## EXTERIOR PATIO ELEVATION - NORTH

1/2" = 1'-0" — 4

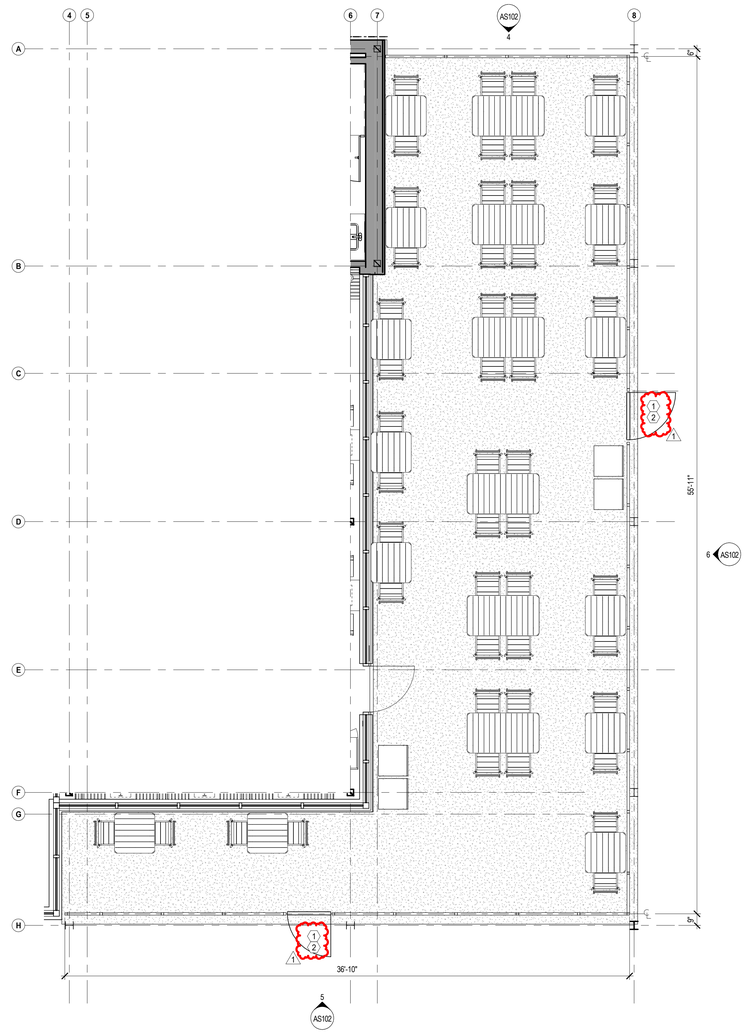


## ENLARGED PLAN - PATIO

1/4" = 1'-0" — 1

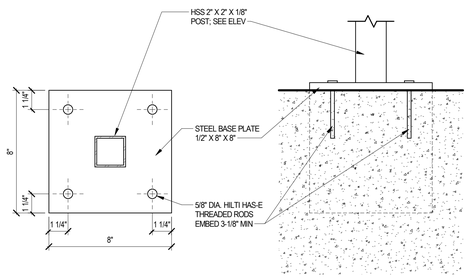


## TYPICAL RAILING POST ANCHOR DETAIL

3" = 1'-0" — 3

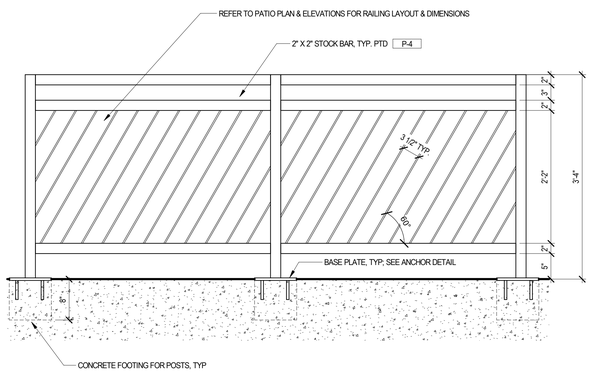


## TYPICAL PATIO RAILING

1" = 1'-0" — 2

## SYMBOL LEGEND

| SYMBOL | DESCRIPTION |
|---|---|
| 01 | KEYNOTE |
| A | ALIGN |
| BV-1 | FINISH TAG; REFER TO FINISH SCHEDULE ON SHEET A601 |
| 101 | DOOR TAG; REFER TO DOOR SCHEDULE ON SHEET A602 |

## KEYNOTES

1. GATE; SEE ELEVATION FOR MORE INFORMATION
2. PROVIDE PANIC HARDWARE; COLOR TO MATCH RAILING

## GENERAL NOTES

A. REFER TO CIVIL DRAWINGS FOR SCOPE OF WORK FOR SITE IMPROVEMENTS

Bergmeyer
LA - 800 South Figueroa St. Suite 1060 Los Angeles, CA 90017 212.337.1090
BOS - 51 Sleeper St. 6th Floor Boston, MA 02210 617.542.1025
www.bergmeyer.com

CONSULTANTS:

SEAL/ SIGNATURE:

| NO. | BY | DATE | DESCRIPTION |
|---|---|---|---|
| 1 | | 2021-03-09 | ADDENDUM 1 |
| | | 2021-01-11 | PERMIT/BID SET |
| | | 2020-12-21 | 75% SET |

SHAKE SHACK

SHAKE SHACK - LEE'S SUMMIT MO

2051 NW LOWENSTEIN DRIVE
LEE'S SUMMIT, MISSOURI 64081
SHACK #1348

PERMIT/BID SET

ENLARGED PATIO PLAN AND EXTERIOR DETAILS

| | |
|---|---|
| DRAWN BY: | CS & WQL |
| CHECKED BY: | JS |
| JOB NO: | 20068.00 |

AS102

3/9/2021 1:44:43 PM C:\Users\djevine\Documents\008_Shake Shack Lee's Summit_Central_djevine@bergmeyer.com.rvt

RELEASE FOR CONSTRUCTION
AS NOTED ON PLANS REVIEW
DEVELOPMENT SERVICES
LEE'S SUMMIT, MISSOURI

03/10/2021

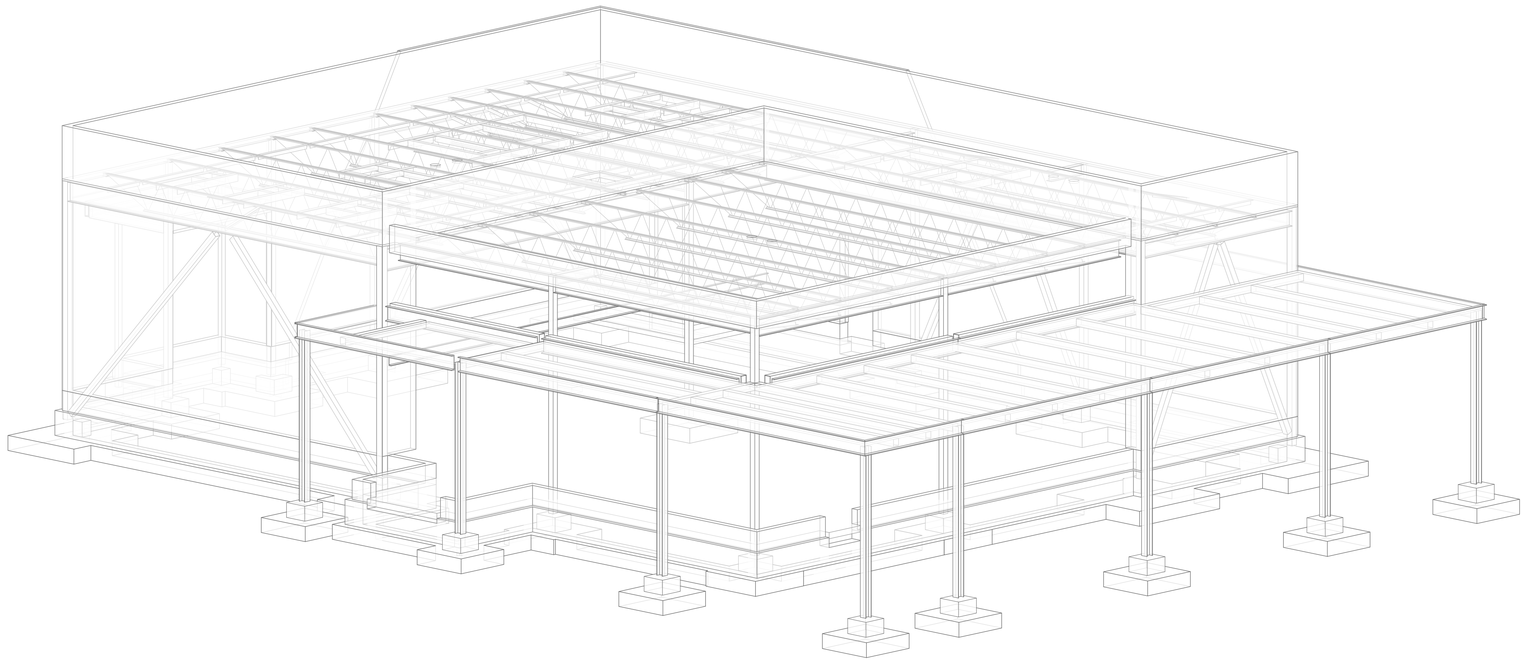

## FULL ISOMETRIC

SCALE:

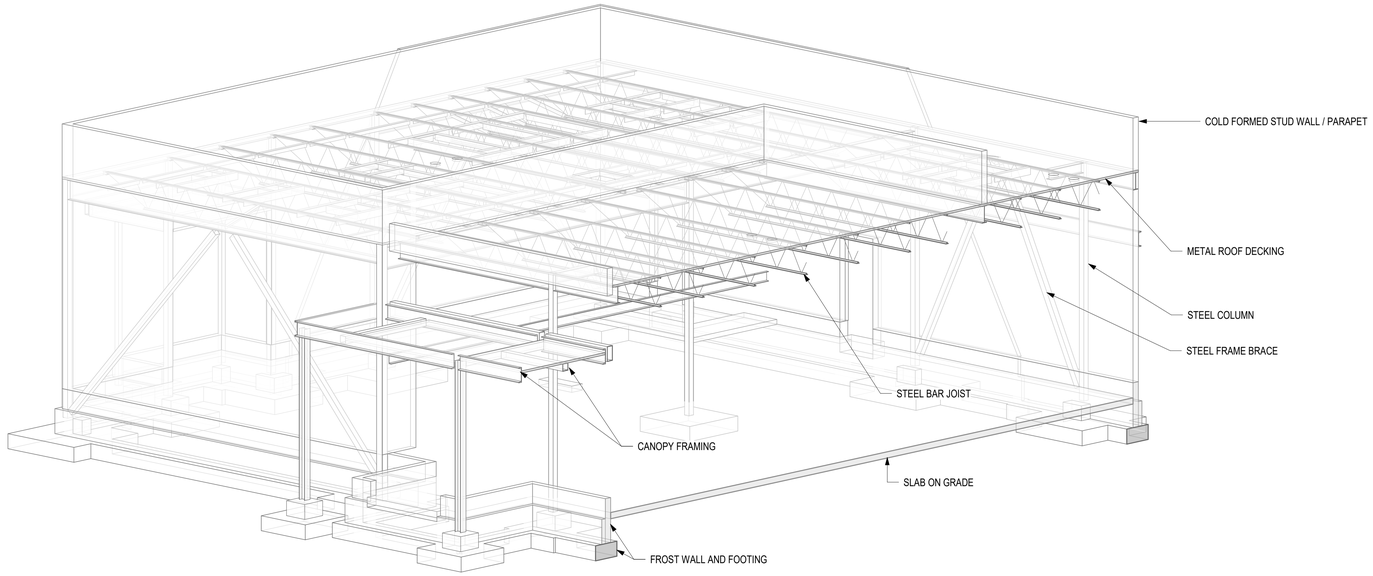


## SECTION ISOMETRIC

SCALE:

### ISOMETRIC VIEWS

1. ISOMETRIC VIEWS ARE PROVIDED FOR REFERENCE ONLY AND SHALL NOT BE USED FOR CONSTRUCTION PURPOSES.
2. CERTAIN ELEMENTS MAY BE OMITTED FROM ISOMETRIC VIEWS, REFER TO PLANS, SECTIONS, AND DETAILS FOR ALL INFORMATION.


Bergmeyer

BOS - 51 Sleeper St. 6th Floor Boston, MA 02210 617.542.1025

LA - 800 South Figueroa St. Suite 1100 Los Angeles, CA 90017 212.337.1090

www.bergmeyer.com


CONSULTANTS:


T+O STRUCTURAL ENGINEERING
51 MELCHER ST, FLR 1
BOSTON, MA 02210
617-938-3349


SEAL/ SIGNATURE:

STATE OF MISSOURI
JEREMIAH C. O'NEILL
NUMBER
PE-2020009130
PROFESSIONAL ENGINEER

| NO. | BY | DATE | DESCRIPTION |
|---|---|---|---|

SHAKE SHACK

SHAKE SHACK - LEE'S SUMMIT MO

2051 NW LOWENSTEIN DRIVE
LEE'S SUMMIT, MISSOURI 64081
SHACK #1348

PERMIT/BID SET

ISOMETRIC VIEWS

| | |
|---|---|
| DRAWN BY: | ESP |
| CHECKED BY: | RFH |
| JOB NO: | 20-128 |

S000


1/11/2021 12:46:43 PM C:\Users\EricPascal\Hayes & O'Neill\20-128 Shake Shack Lees Summit - Documents\03 Structural Drawings\Structural Rev\20-128 Shake Shack Lee's Summit - Structural - R2015.rvt

RELEASE FOR CONSTRUCTION
AS NOTED ON PLANS REVIEW
DEVELOPMENT SERVICES
LEE'S SUMMIT, MISSOURI
03/10/2021

## DRAWING LIST

| DRAWING # | DRAWING NAME |
|---|---|
| S000 | ISOMETRIC VIEWS |
| S001 | GENERAL NOTES I |
| S002 | GENERAL NOTES II |
| S003 | LOADING PLANS |
| S100 | FOUNDATION PLAN |
| S101 | CANOPY FRAMING PLAN |
| S102 | ROOF FRAMING PLAN |
| S200 | COLUMN SCHEDULE |
| S201 | BUILDING SECTIONS |
| S300 | LATERAL FRAME ELEVATIONS |
| S400 | CONCRETE DETAILS I |
| S401 | CONCRETE DETAILS II |
| S500 | STEEL DETAILS I |
| S501 | STEEL DETAILS II |
| S502 | STEEL DETAILS III |

**GENERAL NOTES:**

1. ALL WORK SHALL CONFORM TO THE REQUIREMENTS OF THE STATE BUILDING CODE OF THE COMMONWEALTH OF MASSACHUSETTS, NINTH EDITION.
2. THE CONTRACTOR SHALL VERIFY ALL DIMENSIONS AND CONDITIONS IN THE FIELD PRIOR TO COMMENCING WORK. WHERE DIMENSIONS AND ELEVATIONS OF EXISTING CONSTRUCTION COULD AFFECT THE NEW CONSTRUCTION, IT IS THE CONTRACTOR'S RESPONSIBILITY TO MAKE FIELD MEASUREMENTS IN TIME FOR THEIR INCORPORATION IN THE SHOP DRAWINGS. THE ARCHITECT AND ENGINEER SHALL BE NOTIFIED OF ANY DISCREPANCIES THAT MAY EXIST.
3. SEE ARCHITECTURAL DRAWINGS FOR FLOOR ELEVATIONS, SLOPES, LOCATIONS OF DEPRESSED FLOOR AREAS, AND FLOOR OPENINGS. THE CONTRACTOR SHALL COMPARE THE STRUCTURAL DRAWINGS WITH THE ARCHITECTURAL DRAWINGS AND REPORT ANY DISCREPANCY TO THE ARCHITECT AND ENGINEER PRIOR TO CONSTRUCTION.
4. PRINCIPAL OPENINGS THROUGH THE FRAMING ARE SHOWN ON THESE DRAWINGS. THE GENERAL CONTRACTOR SHALL EXAMINE THE STRUCTURAL, ARCHITECTURAL AND MECHANICAL DRAWINGS FOR THE REQUIRED OPENINGS AND SHALL VERIFY SIZE AND LOCATION OF ALL OPENINGS WITH THE MECHANICAL CONTRACTOR. PROVIDING ALL OPENINGS REQUIRED BY THE MECHANICAL, ELECTRICAL, OR PLUMBING TRADES SHALL BE A PART OF THE GENERAL CONTRACT, WHETHER OR NOT SHOWN IN THE STRUCTURAL DRAWINGS. ANY DEVIATION FROM THE OPENINGS SHOWN ON THE STRUCTURAL DRAWINGS SHALL BE BROUGHT TO THE ENGINEER'S ATTENTION FOR REVIEW.
5. WORK NOT INDICATED ON A PART OF THE DRAWINGS BUT REASONABLY IMPLIED TO BE SIMILAR TO THAT SHOWN AT CORRESPONDING PLACES, SHALL BE INCLUDED IN THE CONTRACTOR'S WORK.
6. THE CONTRACTOR SHALL BE COMPLETELY RESPONSIBLE FOR THE SAFETY OF ADJACENT STRUCTURES, PROPERTY, HIS WORKMEN, AND THE PUBLIC, AS AFFECTED BY THE CONSTRUCTION OF THIS PROJECT.
7. STRUCTURAL DRAWINGS MAY REPRESENT CONSTRUCTION WITH A REFERENCE SCALE. DUE TO THE INHERENT PROCESS OF DRAWING DEVELOPMENT AND PRESENTATION NOT ALL WORK MAY BE SHOWN "EXACT" IN THAT SCALE. DO NOT "SCALE" DRAWINGS TO OBTAIN ANY MISSING INFORMATION OR TO INTERPRET ANY INFORMATION NOT SPECIFICALLY DIMENSIONED FOR "EXACT" DETAILING OR CONSTRUCTION PURPOSES.
8. THE CONTRACT DOCUMENTS REPRESENT FINAL CONDITIONS. STABILITY OF THE STRUCTURE DURING CONSTRUCTION IS THE SOLE RESPONSIBILITY OF THE CONTRACTOR. THIS RESPONSIBILITY, INCLUDES, BUT IS NOT LIMITED TO, THE DESIGN AND FURNISH OF TEMPORARY SUPPORTS, SHORING AND/OR BRACING REQUIRED FOR SAFETY AND STABILITY DURING CONSTRUCTION.

**FOUNDATIONS:**

1. THE FOUNDATION DESIGN IS BASED ON THE RECOMMENDATIONS IN THE GEOTECHNICAL REPORT PREPARED BY COOK, FLATT & STROBEL ENGINEERS, P.A., DATED NOVEMBER 17, 2020.
2. THE FOUNDATION DESIGN IS BASED ON AN ALLOWABLE BEARING CAPACITY OF 3000 PSF. ALL EXCAVATIONS FOR FOOTINGS SHALL EXTEND DOWN TO SUITABLE BEARING SUBGRADE AS DETERMINED BY A GEOTECHNICAL ENGINEER.
3. UNSUITABLE MATERIAL SHALL BE REMOVED DOWN TO SOUND BEARING AND REPLACED WITH WELL COMPACTED FILL. THE GEOTECHNICAL ENGINEER SHALL BE CONSULTED TO DETERMINE WHAT IS DEEMED SUITABLE MATERIAL.
4. EXTERIOR FOOTINGS THAT WILL BE EXPOSED TO FREEZE THAW CYCLES SHALL EXTEND A MINIMUM OF 4'-0" BELOW FINISHED GRADE.
5. FOUNDATIONS SHALL NOT BE PLACED ON FROZEN GROUND OR IN PUDDLED WATER.
6. UNLESS DIRECTED OTHERWISE BY THE GEOTECHNICAL ENGINEER, ALL FOOTINGS EXCAVATIONS SHALL BE FINISHED BY HAND.
7. ALL FOOTINGS AND PIERS SHALL BE CENTERED BELOW THE MEMBERS THEY SUPPORT, UNLESS NOTED OTHERWISE.
8. ALL DOWELS INTO FOUNDATIONS SHALL MATCH THE SIZE, QUANTITY, AND SPACING OF THE WALL, COLUMN, PIER, ETC. ABOVE, UNLESS NOTED OTHERWISE.
9. ALL WALLS SHALL BE TEMPORARILY BRACED UNTIL THE PERMANENT WALL BRACING IS IN PLACE. THE WALL SHALL NOT BE BACKFILLED UNTIL THE PERMANENT BRACING IS IN-PLACE, UNLESS THE CONTRACTOR HAS PROVIDED BRACING SPECIFICALLY DESIGNED FOR THOSE LOADS. AT WALLS THAT HAVE FILL ON BOTH SIDES, THE WALL SHALL BE BACKFILLED SIMULTANEOUSLY ON BOTH SIDES, IN ORDER TO NOT CREATE AN UNBALANCED SOIL LOADING ON THE WALL.
10. CONTRACTOR SHALL COORDINATE ALL UNDERFLOOR DRAINAGE AND PLUMBING WITH THE MEP AND GEOTECHNICAL DRAWINGS.
11. THE CONTRACTOR SHALL PROVIDE CONTROL OF GROUNDWATER LEVELS (DEWATERING) AS REQUIRED TO COMPLETE THE FOUNDATION WORK IN THE DRY. THE METHOD OF DEWATERING SHALL NOT ADVERSELY IMPACT THE GROUND WATER LEVEL OF ADJACENT STRUCTURES.

**WOOD FRAMING:**

1. LUMBER AND ITS FASTENINGS, SHALL CONFORM TO THE NATIONAL DESIGN SPECIFICATIONS OF STRESS-GRADE LUMBER AND ITS FASTENINGS, CURRENT EDITION, AS RECOMMENDED BY THE NATIONAL FOREST PRODUCTS ASSOCIATION. CURRENT EDITION OF WOOD GRADING RULES ARE TO BE FOLLOWED. ALL CONNECTIONS SHALL CONFORM TO THE CURRENT EDITION OF THE NATIONAL DESIGN SPECIFICATION FOR WOOD CONSTRUCTION, AND THE CONTRACT DOCUMENTS.
2. UNLESS OTHERWISE NOTED, ALL JOISTS, STUDS, LINTELS/HEADERS AND PLATES SHALL BE SPRUCE-PINE-FIR (SPF) NO.2 WITH Fc=1,150PSI; Fb=875PSI; Fv=135PSI; E=1,400,00PSI (MC19). SOLID WOOD POSTS SHALL BE DOUGLAS-FIR LARCH NO.2 WITH Fc=1,350 PSI. LUMBER SIZES SHOWN IN THE DRAWINGS ARE NOMINAL SIZE. ACTUAL SIZES SHALL CONFORM TO AMERICAN LUMBER STANDARD PS-20-70.
3. MATERIALS MUST BE GRADE MARKED.
4. FOR OVERLAY FRAMING AT ROOFS OR OTHER CONVENTIONAL ROOF FRAMING, CONTRACTOR SHALL PROVIDE 2X FRAMING IN ACCORDANCE WITH ROOF RAFTER TABLE IN THE APPLICABLE BUILDING CODE.
5. POSTS SUPPORTING HEADERS AND BEAMS SHALL CONTINUE FROM POINT OF LOAD APPLICATION TO THE FOUNDATION.
6. ALL FLUSH CONNECTIONS SHALL HAVE METAL BEAM OR JOIST HANGERS.
7. ALL BEAM OVER POST CONNECTIONS SHALL HAVE A METAL POST CAP, SUCH AS SIMPSON LPC OR BC TYPE POST CAPS, U.N.O.
8. BOLT HOLES THROUGH WOOD SHALL BE DRILLED 1/16" MAXIMUM LARGER THEN THE DIAMETER OF THE BOLTS TO BE INSTALLED.
9. BOLTS THROUGH WOOD SHALL BE FITTED WITH STANDARD WASHERS AT HEAD AND NUT ENDS.
10. EDGE OF A BORED HOLE SHALL NOT BE WITHIN 5/8 INCH OF THE STUDS EDGE. BORED HOLES SHALL NOT BE LOCATED AT CUT OR NOTCH IN THE STUDS.
11. ALL WOOD FRAMING EXPOSED TO WEATHER SHALL BE PRESERVATIVE PRESSURE TREATED SOUTHERN PINE NO. 2 OR BETTER.
12. PRESERVATIVE-TREATED PSLs MAY BE DRILLED OR CUT TO LENGTH (IF APPROVED BY EOR), BUT SHALL NOT BE RIPPED, NOTCHED, OR RESIZED ALONG THE LENGTH OF THE MEMBER.
13. FRAMING LUMBER SHALL BE SOUND, THOROUGHLY SEASONED, SURFACED FOUR SIDES, WELL MANUFACTURED AND FREE FROM WARP NOT CORRECTABLE BY BRIDGING, BLOCKING OR NAILING. MOISTURE CONTENT SHALL BE A MAXIMUM OF 19 PERCENT.
14. WOOD STRUCTURAL PANELS SHALL BE INSTALLED WITH A 1/8" GAP BETWEEN PANEL ENDS AND EDGES.
15. ALL INTERIOR LOAD BEARING WALLS SHALL HAVE ONE ROW OF BLOCKING AT THE MID-HEIGHT OF THE STUDS. ANY WALL THAT IS NOT SHEATHED ON BOTH SIDES WITH EITHER WOOD STRUCTURAL PANELS OR GYPSUM BOARD, SHALL HAVE WOOD BLOCKING SPACED AT NO MORE THAN 4'-0" O.C.
16. WOOD JOISTS JOISTS SHALL BE TOE NAILED TO WOOD SUPPORT WITH TWO 10D NAILS.
17. WOOD JOISTS SHALL HAVE MINIMUM BEARING OF 1 1/2".
18. WOOD JOIST ENDS SHALL BE LAPPED OVER BEARING AND NAILED TOGETHER WITH 3-16D NAILS; MINIMUM LAP, 4".
19. JOIST OVERHANG SHALL NOT EXCEED 12" UNLESS OTHERWISE NOTED.
20. JOIST BRIDGING SHALL BE PROVIDED AT ALL JOIST SPANS EXCEEDING 8FT AND BE INSTALLED IN AN OFFSET FASHION. MAXIMUM SPACING = 8FT. JOIST BLOCKING SHALL BE FULL DEPTH TO MATCH THE JOIST DEPTH.
21. AT FLOOR OPENING UP TO 2'-0" IN WIDTH, DOUBLE THE JOISTS AT EACH SIDE OF THE OPENING. AT LARGER OPENINGS NOT SHOWN ON THE FRAMING PLAN SHALL BE CALLED TO THE ATTENTION OF THE E.O.R.
22. BUILT-UP STUDS COLUMNS SHALL BE NAILED TOGETHER AS FOLLOWS (D=NAIL DIAMETER):
23. POST NAILING - ADJACENT NAILS SHALL BE DRIVEN FROM OPPOSITE SIDES OF COLUMN.
24. POST NAILING - ALL NAILS SHALL PENETRATE ALL LAMINATIONS AND AT LEAST 3/4 THE THICKNESS OF THE OUTERMOST LAMINATION.
25. POST NAILING - THE NAIL END DISTANCE FROM THE END OF COLUMN SHALL BE BETWEEN 15D AND 18D
26. POST NAILING - THE SPACING BETWEEN ADJACENT NAILS IN A ROW SHALL NOT BE GREATER THAN EITHER 20D OR 6*TMIN (WHERE TMIN=THICKNESS OF THE THINNEST LAMINATION)
27. POST NAILING - THE SPACING BETWEEN ROWS OF NAILS SHALL BE BETWEEN 10D AND 20D
28. POST NAILING - THE NAIL EDGE DISTANCE SHALL BE BETWEEN 5D AND 20D
29. POST NAILING - PROVIDE 2 LONGITUDINAL ROWS OF NAILS MINIMUM.
30. SOLE PLATES SHALL BE NAILED TO SUBFLOOR AND JOISTS WITH 16D NAILS AT EACH JOIST. SEE SHEAR WALL NAILING SCHEDULES FOR ADDITONAL NAILING REQUIREMENTS.
31. TOP PLATES FOR BEARING PARTITIONS SHALL BE TWO 2x (STUD WALL DEPTH) OR A CONTINUOUS HEADER. PLATE MEMBERS OF PRINCIPAL PARTITIONS SHALL BE LAPPED A MINIMUM OF 48" AND NAILED WITH (16)-16D STAGGERED. WHERE 48" LAP CANNOT BE ACHIEVED, A CS16 STRAP WITH (22)-10D NAILS SHOULD BE USED TO SPLICE THE PLATE.
32. TOP PLATES FOR NON-BEARING PARTITIONS TO BE DOUBLE. NAIL PLATE TO STUD WITH TWO 16D NAILS. WHEN TOP PLATE IS PARALLEL TO CEILING OR FLOOR FRAMING INSTALL 2 X 4 CROSS BLOCKING NOT MORE THAN 4'-0"O.C.
33. WHEN TOP PLATES ARE CUT FOR PIPING OR DUCT WORK, REINFORCE WITH STEEL STRAPS.
34. SILL PLATES AT BEARING DIRECTLY ON CONCRETE SHALL BE PRESSURE TREATED LUMBER, 0.25CCA MINIMUM SOUTHERN PINE NO.2 OR BETTER.
35. BEAMS AND GIRDERS WILL NOT REST LESS THAN 4" ON SUPPORTS.
36. WHERE BEAMS AND GIRDERS OF NOMINAL 2" MEMBERS ARE SPECIFIED, NAIL TOGETHER WITH TWO ROWS OF 16D NAILS SPACED NOT MORE THAN 24"O.C., LOCATE END JOISTS IN MEMBERS OVER SUPPORTS.
37. ALL BEAMS MUST SPLICE ONLY OVER SUPPORTS UNLESS SPECIFICALLY INSTRUCTED OTHERWISE BY STRUCTURAL ENGINEER.
38. ALL BUILT-UP WOOD BEAMS WIDER THAN 6"WILL BE BOLTED WITH 5/8"DIAMETER THROUGH-BOLTS AT 2'-0" O.C. STAGGERED SPACING, UNLESS OTHERWISE NOTED.
39. ALL INTERIOR WALLS SHALL HAVE A JOIST LOCATED DIRECTLY BELOW (AT PARALLEL WALLS) OR CONTINUOUS BLOCKING (AT PERPENDICULAR WALLS).
40. NAILING INSTALLATION AND MATERIAL ARE TO BE IN COMPLIANCE WITH A.I.T.C., NDS AND IN ACCORDANCE WITH THE APPLICABLE LOCAL BUILDING CODE.
41. NAILS SHALL HAVE A MINIMUM PENETRATION OF 6 TIMES THE WIRE DIAMETER UNLESS OTHERWISE NOTED ON PLANS.
42. EDGE DISTANCE FOR ALL NAILS SHALL BE MINIMUM OF 2 TIMES THE WIRE DIAMETER UNLESS OTHERWISE NOTED ON PLANS.
43. ALL NAILS SHOWN IN NAILING SCHEDULE SHALL BE COMMON. THREADED, HARDENED STEEL NAILS MAY BE SUBSTITUTED FOR COMMON SIZE NAILS OF CORRESPONDING SIZE FOR PLYWOOD. USE ANNULAR-RING, COMMON WIRE, GALVANIZED NAILS FOR PLYWOOD. GALVANIZED NAILS SHALL BE HOT-DIP GALVANIZED, ASTM-A153.
44. ALL FASTENERS USED IN PRESSURE TREATED WOOD SHALL BE COATED, TREATED, AND APPROVED FOR USE IN PRESSURE TREATED WOOD.
45. ALL FASTENERS USED IN FIRE TREATED LUMBER SHALL BE COATED AND APPROVED FOR THAT USE BY THE MANUFACTURER.
46. BORED HOLES IN WOOD STUD WALLS SHALL NOT EXCEED A DIAMETER GREATER THAN 40% OF THE STUD DEPTH, I.E. 2x4 SHALL NOT HAVE A HOLE GREATER THAN 1 3/8" DIAMETER. HOLE EDGE SHALL BE 5/8" CLEAR OF STUD EDGE. WOOD POSTS SHALL NOT HAVE BORED HOLES WITHOUT APPROVAL FROM E.O.R.

**LVL, PSL, GLULAM (GL) LUMBER:**

1. "LVL" LUMBER SHALL BE FABRICATED FROM ULTRASONICALLY GRADED SOUTHERN PINE VENEERS IN ACCORDANCE WITH NER 126.
2. "PSL" LUMBER SHALL BE FABRICATED FROM LONG, THIN STRANDS OF EITHER EASTERN OR WESTERN SPECIES WOOD BONDED TOGETHER WITH A MICROWAVE PROCESS.
3. EASTERN "PSL" LUMBER (ES) MAY INCLUDE SOUTHERN PINE OR YELLOW POPLAR. WESTERN "PS LUMBER (WS) MAY INCLUDE DOUGLAS FIR, LODGEPOLE PINE, WESTERN HEMLOCK OR WHITE FIR.
4. "PSL" LUMBER SHALL BE FABRICATED IN PARALLEL STRANDS (PSL) IN CONFORMANCE WITH NER 292.
5. "GL" LUMBER SHALL BE FABRICATED FROM LAMINATED 2X LUMBER ACCORDING TO STANDARDS SET FORTH IN NDS AND OTHER APPLICABLE CODES.
6. HEAL CUTS ON BEAMS MUST NOT OVERHANG INSIDE FACE OF SUPPORT MEMBER.
7. "LVL" AND "PSL" MEMBERS SHALL BE FABRICATED WITHOUT CAMBER. GLULAM MEMBERS MAY BE CAMBERED TO REMOVE DEAD LOAD DEFLECTION.
8. THE "LVL", "PSL" AND "GL" MEMBERS SHALL BE PROTECTED FROM THE WEATHER WHILE IN STORAGE. CARE SHALL BE EXERCISED DURING HANDLING TO PREVENT DAMAGE TO THE SAME.
9. ADHESIVES SHALL COMPLY WITH ASTM D2559-76 ADHESIVES FOR STRUCTURAL LAMINATED PRODUCTS FOR USE UNDER EXTERIOR (WET USE) EXPOSURE CONDITIONS.
10. PRIOR TO START OF ERECTION, VERIFY THE LOCATIONS AND ELEVATION OF ALL BEARING SURFACES AND EMBEDDED ANCHORS. REPORT ANY DEVIATIONS TO THE GENERAL CONTRACTOR. DO NOT BEGIN WORK UNTIL UNSATISFACTORY CONDITIONS ARE CORRECTED. TAKE MEASUREMENTS ON SITE AS REQUIRED FOR CORRECT FABRICATION AND INSTALLATION.
11. THE MEMBERS SHALL HAVE THE FOLLOWING MINIMUM DESIGN STRESSES:
    - A. SHEAR MODULUS OF ELASTICITY (G)
        - a. LVL=125,000 PSI
        - b. PSL=112,500 PSI
        - c. GL=125,000 PSI
    - B. MODULUS OF ELASTICITY (E)
        - a. LVL=2.0X106 PSI
        - b. PSL=1.8X106 PSI
        - c. GL=2.0X106 PSI
    - C. FLEXURAL STRESS (F'B)
        - a. LVL=2,600 PSI
        - b. PSL=2,400 PSI
        - c. GL=2,400 PSI
    - D. COMPRESSION PERPENDICULAR TO THE GRAIN (F'CPERP)
        - a. LVL=750 PSI
        - b. PSL=545 PSI
        - c. GL=740 PSI
    - E. COMPRESSION PARALLEL TO GRAIN (F'CPARALLEL)
        - a. LVL=2,510 PSI
        - b. PL=2,500 PSI
        - c. GL=2,400 PSI
    - F. HORIZONTAL SHEAR (FV)
        - a. LVL=285 PSI
        - b. PSL=190 PSI
        - c. GL=290 PSI

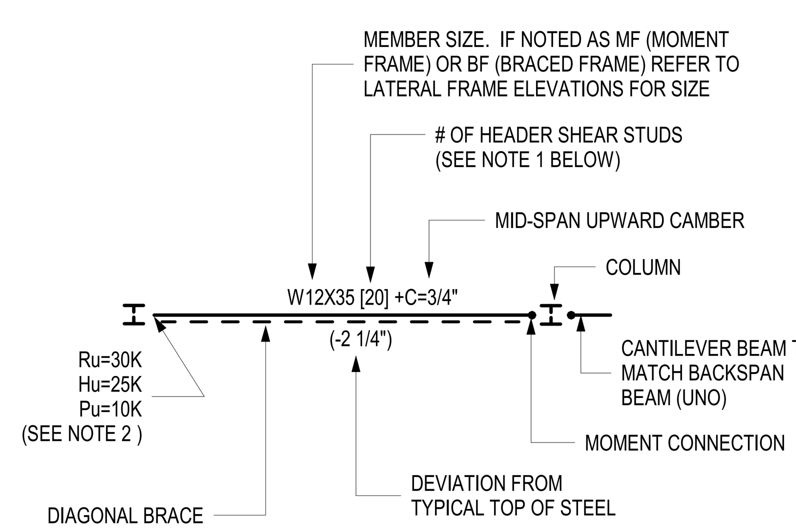


## BEAM LEGEND

**NOTES:**

1. STUD COUNTS ARE SHOWN ON PLAN. THE FOLLOWING MINIMUMS SHALL BE PROVIDED AT ALL BEAMS: (a) AT MOMENT FRAME AND BRACED FRAME BEAMS PROVIDE A MINIMUM OF (1) SHEAR STUD PER 1 FT ; (b) AT ALL OTHER BEAMS PROVIDE A MINIMUM OF (1) SHEAR STUD PER 2 FT
2. THE GENERAL NOTES PROVIDE END SHEAR REACTIONS FOR BEAM CONNECTION DESIGN. WHERE BEAM END REACTIONS ARE POSTED ON PLAN, THE GREATER OF THE GENERAL NOTES AND THE POSTED VALUE SHALL BE USED FOR DESIGN. BEAM END REACTIONS POSTED ON PLANS ARE FACTORED.
    - Ru= FACTORED SHEAR REACTION (VERTICAL DIRECTION)
    - Hu= FACTORED SHEAR REACTION (HORIZONTAL DIRECTION)
    - Pu= FACTORED AXIAL LOAD
    - Tu= FACTORED TORSION LOAD
    - Mux= FACTORED STRONG AXIS MOMENT
    - Muy= FACTORED WEAK AXIS MOMENT

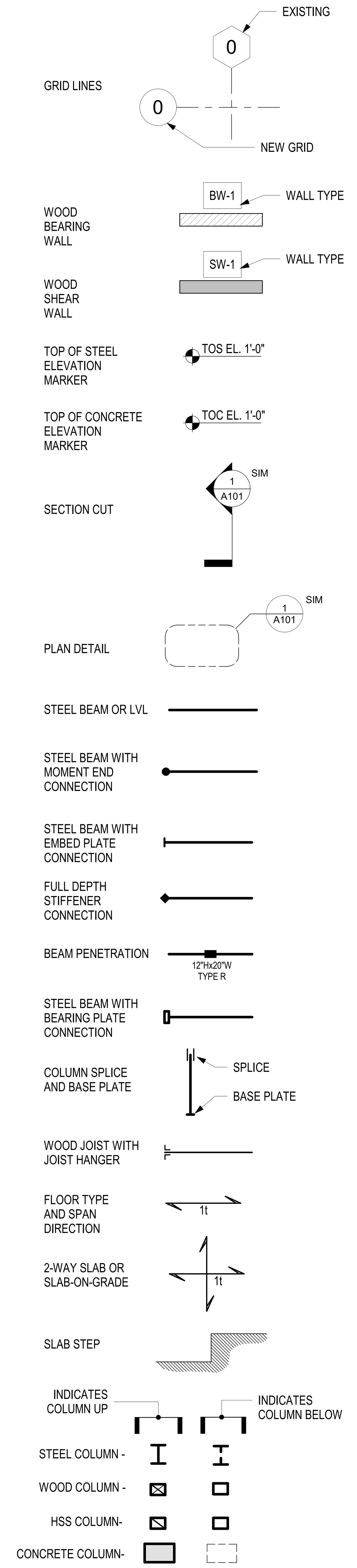


**ABBREVIATIONS:**

| | |
|---|---|
| ACI | AMERICAN CONCRETE INSTITUTE |
| ADDL | ADDITIONAL |
| AISC | AMERICAN INSTIT. OF STEEL CONSTR. |
| ALT | ALTERNATE |
| ARCH | ARCHITECT |
| ASD | ALLOWABLE STRESS DESIGN |
| AWS | AMERICAN WELDING SOCIETY |
| BF | BRACED FRAME |
| BOT | BOTTOM |
| BOF | BOTTOM OF FOOTING |
| BRG | BEARING |
| BLDG | BUILDING |
| CB | CONCRETE BEAM |
| CIP | CAST-IN-PLACE |
| CL | CENTERLINE |
| CLR | CLEAR |
| CMU | CONCRETE MASONRY UNIT |
| COL | COLUMN |
| CONC | CONCRETE |
| CJ | CONSTRUCTION JOINT |
| CONT | CONTINUOUS |
| CNTR | CENTERED |
| D&E | DRILL AND EPOXY |
| DEPR | DEPRESSION |
| DET | DETAIL |
| DIA | DIAMETER |
| Ø | DIAMETER |
| DIM | DIMENSION |
| DIR | DIRECTION |
| DN | DOWN |
| DO | DITTO |
| DWG | DRAWING |
| DWLS | DOWELS |
| (E) | EXISTING |
| EA | EACH |
| EE | EACH END |
| EF | EACH FACE |
| EL | ELEVATION |
| ELEV | ELEVATOR |
| EQ | EQUAL |
| EF | EACH FACE |
| EW | EACH WAY |
| EXP ANC | EXPANSION ANCHOR |
| EXP JT | EXPANSION JOINT |
| FND | FOUNDATION |
| FIN FLR | FINISHED FLOOR |
| FLR | FLOOR |
| FRT | FIRE-RETARDANT TREATED |
| FT | FEET |
| FTG | FOOTING |
| FV | FIELD VERIFY |
| GT | GIRDER TRUSS |
| HORIZ | HORIZONTAL |
| HP | HIGH POINT |
| HSS | HOLLOW STRUCTURAL SECTION |
| IBC | INTERNATIONAL BUILDING CODE |
| ID | INSIDE DIAMETER |
| IN | INCH |
| K | KIP=1000 LBS |
| LLV | LONG LEG VERTICAL |
| LLH | LONG LEG HORIZONTAL |
| LP | LOW POINT |
| LRFD | LOAD RESISTANCE FACTOR DESIGN |
| LSV | LONG SIDE VERTICAL |
| LSH | LONG SIDE HORIZONTAL |
| LWC | LIGHTWEIGHT CONCRETE |
| MECH | MECHANICAL |
| MEP | MECHANICAL, ELECTRICAL, PLUMBING |
| MEZZ | MEZZANINE |
| MF | MOMENT FRAME |
| (N) | NEW |
| NIC | NOT IN CONTRACT |
| NO. | NUMBER |
| NTS | NOT TO SCALE |
| NWC | NORMAL WEIGHT CONCRETE |
| OC | ON CENTER |
| OD | OUTSIDE DIAMETER |
| OPG | OPENING |
| OWJ | OPEN-WEB JOIST/TRUSS (PREFABRICATED) |
| PT | POST-TENSIONED |
| PC | PILE CAP |
| PCI | PRECAST CONCRETE INSTITUTE |
| PL | PLATE |
| PSF | POUNDS PER SQUARE FOOT |
| PSI | POUNDS PER SQUARE INCH |
| REF | REFERENCE |
| REINF | REINFORCING |
| RETG | RETAINING |
| SHT | SHEET |
| SIM | SIMILAR |
| SOG | SLAB-ON-GRADE |
| SS | STAINLESS STEEL |
| STD | STANDARD |
| STL | STEEL |
| T | TOP |
| T.O. | TOP OF |
| T&B | TOP AND BOTTOM |
| TB | TIE-BEAM |
| THK | THICK |
| TOC | TOP OF CONCRETE |
| TOS | TOP OF STEEL |
| TOW | TOP OF WALL |
| TYP | TYPICAL |
| UNO | UNLESS NOTED OTHERWISE |
| VIF | VERIFY IN FIELD |
| W/ | WITH |
| WP | WORKPOINT |
| WWF | WELDED WIRE FABRIC |

Bergmeyer
BOS - 51 Sleeper St. 6th Floor Boston, MA 02210 617.542.1025
LA - 800 South Figueroa St. Suite 1080 Los Angeles, CA 90017 212.337.1090
www.bergmeyer.com

CONSULTANTS:
H+O STRUCTURAL ENGINEERING
51 MELCHER ST, FLR 1
BOSTON, MA 02210
617-938-3349

SEAL/ SIGNATURE:
STATE OF MISSOURI
JEREMIAH C. O'NEILL
NUMBER PE-2020009130
PROFESSIONAL ENGINEER

| NO. | BY | DATE | DESCRIPTION |
|---|---|---|---|

SHAKE SHACK

SHAKE SHACK - LEE'S SUMMIT MO

2051 NW LOWENSTEIN DRIVE
LEE'S SUMMIT, MISSOURI 64081
SHACK #1348

PERMIT/BID SET

GENERAL NOTES I

| | |
|---|---|
| DRAWN BY: | ESP |
| CHECKED BY: | RFH |
| JOB NO: | 20-128 |

S001

1/11/2021 12:46:45 PM C:\Users\EricPicard\Hayes & O'Neill\20-128 Shake Shack Lees Summit - Documents\03 Structural Drawings\Structural Revit\20-128 Shake Shack Lee's Summit - Structural - R2019.rvt

RELEASE FOR CONSTRUCTION
AS NOTED ON PLANS REVIEW
DEVELOPMENT SERVICES
LEE'S SUMMIT, MISSOURI
03/10/2021

**REINFORCEMENT:**

1. REINFORCEMENT DETAILING, FABRICATION, AND INSTALLATION SHALL CONFORM TO ACI 318-14, ACI DETAILING MANUAL LATEST EDITION (SP-66), AND CRSI MANUAL OF STANDARD PRACTICE LATEST EDITION.
2. STEEL REINFORCEMENT FOR REBARS, STIRRUPS, AND TIES SHALL CONFORM TO ASTM A615 GRADE 60. REBARS GREATER THAN #11 IN SIZE SHALL BE GRADE 75.
3. WELDED WIRE FABRIC (WWF) SHALL CONFORM TO ASTM A185.
4. PROVIDE THE NECESSARY ACCESSORIES TO SUPPORT ALL REINFORCEMENT IN ITS INTENDED POSITION.
5. REFER TO CONCRETE COVER TABLE FOR MINIMUM PROTECTIVE COVERING FOR REINFORCEMENT.
6. WHERE CONTINUOUS REINFORCEMENT IS CALLED FOR, IT SHALL BE EXTENDED AROUND CORNERS, HOOKED AT DISCONTINUOUS ENDS, AND LAPPED WITH CLASS B TENSION SPLICES BETWEEN BAR SEGMENTS.
7. WWF FABRIC LAPS SHALL BE 8" OR 1.5 PANELS, WHICHEVER IS GREATER.
8. ALL HOOKS SHOWN ON DRAWINGS SHALL BE STANDARD HOOKS, UNLESS NOTED OTHERWISE.
9. PRIMARY BEAM FLEXURAL REINFORCEMENT SHALL BE PLACED IN A SINGLE TOP AND BOTTOM LAYER, U.N.O.
10. AT BEAMS DEEPER THAN 18", PROVIDE CONTINUOUS #4 SIDE BARS (EACH FACE) SPACED NO MORE THAN 12" O.C.
11. BEAMS SHALL HAVE A MINIMUM STIRRUP SIZE AND SPACING OF: #3 SPACED AT (BEAM DEPTH-3")/2 OR 24" MAX.
12. REINFORCEMENT SHOWN IN SECTIONS AND DETAILS IS INTENDED TO BE TYPICAL WHERE THAT SECTION APPLIES.
13. MINIMUM ADDITIONAL REINFORCEMENT SHALL BE PROVIDED AS FOLLOWS: (2)-#5 EACH SIDE OF OPENING (EXTEND 24" BEYOND OPENING EDGE), (2)-#4 x 48" LG AT EACH CORNER OF AN OPENING. SEE TYPICAL OPENING DETAILS FOR ADDITIONAL REINFORCEMENT REQUIREMENTS.
14. DOWELS SHALL MATCH BAR SIZE AND NUMBER OF THE MAIN REINFORCING.
15. REINFORCEMENT SHALL BE CONTINUOUS THROUGH CONSTRUCTION JOINTS.

**METAL DECKING:**

1. FABRICATE STEEL DECKING FROM STEEL TYPE ASTM A653 HAVING A MINIMUM YIELD STRENGTH OF 50 KSI, EXCEPT 16GA DECKING AND ROOF DECKING SHALL BE 33 KSI. ALL DECK SHALL BE DESIGNED, DETAILED, FABRICATED, AND INSTALLED IN ACCORDANCE WITH THE STEEL DECK INSTITUTE.
2. DECK GALVANIZING SHALL BE IN ACCORDANCE WITH ASTM A653. DECK COATINGS SHALL BE AS FOLLOWS: ROOF DECK - G60, PARKING DECKS - G90, DECKS EXPOSED TO WEATHER - G90, ALL OTHER LOCATIONS -G30.
3. SUBMIT ENGINEERED SHOP DRAWINGS INDICATING THE SIZE, GAGE, GRADE, AND FINISH OF ALL DECKING. INDICATE SIDELAP FASTENERS AND DECK WELDS. CLEARLY INDICATE ANY LOCATIONS THAT REQUIRE TEMPORARY SHORING.
4. DECK SUPPLIER SHALL DESIGN METAL DECKING TO SAFELY SUPPORT THE WET WEIGHT OF CONCRETE INCLUDING AN ALLOWANCE FOR PONDING AND AN INDUSTRY STANDARD CONSTRUCTION LIVE LOADING OF 20 PSF OR 150-LBS POINT LOAD ON A 1'-0" STRIP OF DECK. ANY SPANS WHICH REQUIRE TEMPORARY SHORING SHALL BE CLEARLY NOTED IN THE SHOP DRAWINGS, AND SHORING INSTALLED BY THE GENERAL CONTRACTOR. THE CONCRETE SUB SHALL PLACE THE SLAB IN A MANNER TO NOT EXCEED THESE CONSTRUCTION LIVE LOADS UNLESS ADDITIONAL MEASURES AND SHORING ARE UTILIZED.
5. COMPOSITE METAL DECK SHALL HAVE ADEQUATE COMPOSITE STRENGTH TO SAFELY SUPPORT THE PERMANENT FLOOR LOADING LISTED IN THE GENERAL NOTES.
6. THE DEFLECTION OF METAL DECK FROM THE WET WEIGHT OF CONCRETE SHALL NOT BE GREATER THAN 3/4" OR L/180, WHICHEVER IS SMALLER.
7. AT METAL ROOF DECK, THE MAXIMUM CEILING LOAD THAT CAN BE HUNG FROM THE DECK IS 50 LBS, PROVIDED THAT NO OTHER LOADS ARE HUNG FROM THE DECK IN A 30" RADIUS. DUCTWORK, PIPE, ETC SHALL BE HUNG DIRECTLY FROM STRUCTURAL STEEL BEAMS. PROVIDE SUPPLEMENTARY STEEL AS REQUIRED TO SPAN THE MEP LOADS DIRECTLY TO STEEL BEAMS.
8. DECK SHALL SPAN THREE OF MORE SUPPORTS WHERE POSSIBLE.
9. COMPOSITE METAL DECK SHALL BE FASTENED TO SUPPORTING BEAMS WITH 3/4" DIA. PUDDLE WELDS OR SHEAR CONNECTORS SPACED NO MORE THAN 12" O.C. SIDELAPS SHALL BE FASTENED AT NO MORE THAN 36" O.C. OR AT THE MIDSPAN, WHICHEVER IS LESS.
10. METAL ROOF DECK SHALL BE FASTENED AT SUPPORTS USING A 24/4 PATTERN WITH 5/8" DIA. PUDDLE WELDS. SIDELAPS SHALL BE FASTENED WITH #10 SCREWS AT 6" O.C.
11. COORDINATE FLOOR AND ROOF OPENINGS WITH THE ARCH AND MEP DRAWINGS. PROVIDE SUPPLEMENTAL FRAMING/REINFORCING PER THE TYPICAL DETAILS. OPENINGS THROUGH COMPOSITE METAL DECK THAT DO NOT HAVE A SUPPLEMENTAL STEEL SUPPORT FRAME SHALL NOT BE CUT UNTIL AFTER THE SLAB HAS BEEN POURED AND IS FULLY CURED.

**STEEL JOISTS AND JOIST GIRDERS:**

1. STEEL JOISTS AND JOIST GIRDERS SHALL BE DESIGNED, DETAILED, FABRICATED, AND ERECTED IN ACCORDANCE WITH THE CODE OF STANDARD PRACTICE AND SPECIFICATIONS OF THE STEEL JOIST INSTITUTE (SJI).
2. ALL JOISTS AND JOIST GIRDERS SHALL BE COATED WITH STANDARD SHOP PRIMER.
3. HORIZONTAL BRIDGING, WIND UPLIFT BRIDGING, AND ERECTION BRIDGING SHALL BE PROVIDED, SIZED, AND SPACED PER SJI SPECIFICATIONS. LINES OF BRIDGING SHALL BE TERMINATED WITH A MINIMUM OF ONE BAY CROSS BRIDGING. JOIST SUPPLIER SHALL BE RESPONSIBLE FOR SIZING AND SPECIFYING SPACING OF JOIST BRIDGING. BRIDGING SIZE AND SPACING SHALL BE NOTED ON THE JOIST PLACEMENT PLANS.
4. JOIST GIRDERS BRIDGING SHALL BE DESIGNED AND PROVIDED TO RESIST THE UPLIFT PRESSURES SPECIFIED.
5. ALL BRIDGING SHALL BE IN PLACE PRIOR TO APPLICATION OF LOADS.
6. BOTTOM CHORD CONNECTIONS SHALL ONLY BE MADE AFTER THE APPLICATION OF THE SUPERIMPOSED DEAD LOADS.
7. MINIMUM JOIST BEARING REQUIREMENTS ON STRUCTURAL STEEL SUPPORTS SHALL BE AS FOLLOWS: K-TYPE=2 1/2", LH-TYPE=4", JOIST GIRDERS=4".
8. MINIMUM JOIST BEARING REQUIREMENTS ON CONCRETE OR MASONRY SHALL BE AS FOLLOWS: K-TYPE=4", LH-TYPE=6", JOIST GIRDERS=6".
9. JOIST SEATS SHALL HAVE MINIMUM 1.9K ALLOWABLE ROLLOVER CAPACITY U.N.O.
10. JOIST TOP CHORD EXTENSIONS SHALL TYPE "R" U.N.O.
11. JOIST SUPPLIER SHALL DESIGN JOISTS AND SUBMIT CALCULATIONS FOR EACH JOIST TYPE. CALCULATIONS SHALL IDENTIFY ALL MEMBER SIZES AND MEMBER WELD LENGTHS AND WELD SIZES. CALCULATIONS SHALL BE STAMPED AND SIGNED BY A PROFESSIONAL ENGINEER REGISTERED IN THE PROJECT STATE.

**POST-INSTALLED ANCHORS:**

1. POST-INSTALLED ANCHORS SHALL BE USED ONLY WHERE SPECIFIED ON THE DRAWINGS.
2. CONTRACTOR SHALL OBTAIN APPROVAL FROM E.O.R. PRIOR TO USING POST-INSTALLED ANCHORS FOR MISSING OR MISPLACED CAST-IN-PLACE ANCHORS.
3. CARE SHALL BE GIVEN TO AVOID CONFLICTS WITH EXISTING REINFORCEMENT.
4. HOLES SHALL BE DRILLED AND CLEANED PER THE MANUFACTURER'S APPROVED INSTALLATION INSTRUCTIONS.
5. ANCHORS SHALL BE INSTALLED PER THE MANUFACTURER'S APPROVED INSTALLATION INSTRUCTIONS AT NOT LESS THAN THE MINIMUM EDGE DISTANCES AND/OR SPACING INDICATED IN THE MANUFACTURER'S PUBLISHED TECHNICAL LITERATURE.
6. CONTRACTOR SHALL CONTACT MANUFACTURER PRIOR TO ANY ANCHOR INSTALLATION TO DETERMINE IF INSTALLATION TRAINING IS REQUIRED.
7. UNLESS SPECIFIED OTHERWISE, ANCHORS SHALL BE EMBEDDED IN THE APPROPRIATE SUBSTRATE WITH A MINIMUM EMBEDMENT OF (8) TIMES THE NORMAL ANCHOR DIAMETER OR THE EMBEDMENT REQUIRED TO SUPPORT THE SPECIFIED LOAD.
8. SUBSTITUTION REQUESTS, FOR PRODUCTS OTHER THAN THOSE LISTED BELOW, SHALL BE SUBMITTED TO THE E.O.R. WITH THE APPROVED ESR REPORT, AND WITH CALCULATIONS PREPARED AND SEALED BY A COMMONWEALTH-OF-MASSACHUSETTS LICENSED PROFESSIONAL ENGINEER SHOWING THAT THE SUBSTITUTED PRODUCT WILL ACHIEVE AN EQUIVALENT CAPACITY USING THE APPROPRIATE DESIGN PROCEDURE REQUIRED BY THE APPLICABLE BUILDING CODE(S) SPECIFIED IN THESE PLANS.
9. ACCEPTABLE PRODUCTS ARE:
   A. "CRACKED CONCRETE" ADHESIVE ANCHORS:
      a. "HILTI HIT-HY 200" BY HILTI.
      b. "SET-XP STRUCTURAL EPOXY" BY SIMPSON STRONG-TIE.
   B. UNREINFORCED BRICK AND CMU MASONRY:
      a. "HILTI HIT-HY 270" BY HILTI.
      b. "ET-HP" BY SIMPSON STRONG-TIE.

**STRUCTURAL STEEL:**

1. STRUCTURAL STEEL DESIGN CONFORMS TO THE AISC SPECIFICATION FOR STRUCTURAL STEEL BUILDING, THIRTEENTH EDITION.
2. STRUCTURAL STEEL WORK SHALL CONFORM TO AISC 360-10 "SPECIFICATION FOR STRUCTURAL STEEL BUILDINGS", AISC 303-10 "CODE OF STANDARD PRACTICE FOR STEEL BUILDING & BRIDGES", AND AISC 341-10 AND SUPPLEMENTS "SEISMIC PROVISIONS FOR STRUCTURAL STEEL BUILDINGS".
3. STRUCTURAL STEEL SHALL BE NEW MATERIAL THAT SATIFIES THE PROPERTY REQUIREMENTS INDICATED IN THE "STRUCTURAL STEEL MATERIAL PROPERTIES" SCHEDULE.
4. ALL STEEL SHALL BE COATED WITH SHOP PRIMER UNLESS STEEL IS TO BE FIREPROOFED (SEE ARCH DRAWINGS).
5. ALL STEEL EXPOSED TO WEATHER SHALL BE HOT DIP GALVANIZED. FIELD WELDS OF GALVANIZED MEMBERS SHALL BE TOUCHED UP USING A ZINC RICH PRIMER AFTER COMPLETION AND INSPECTION OF THE WELD.
6. INFILL BEAMS SHALL BE SPACED EQUALLY BETWEEN ESTABLISHED DIMENSIONS, U.N.O.
7. ALL SHOP AND FIELD WELDS TO CONFORM TO AWS D1.1-04 "STRUCTURAL WELDING CODE"
8. WELDED CONNECTIONS SHALL BE MADE BY CERTIFIED WELDERS USING FILLER METAL CONFORMING TO E70XX OR F7X-EXXX WITH LOW HYDROGEN.
9. WELDS SHALL DEVELOP THE FULL STRENGTH OF THE MATERIALS BEING WELDED, U.N.O.
10. ALL WELD SIZES SHALL BE THE MINIMUM REQUIRED SIZE BASED ON THE THICKNESS OF THE THICKER PART ACCORDING TO AISC TABLE J2.3 & J2.4.
11. ALL FILLET WELDS SHALL BE 1/4" THICK MINIMUM.
12. ALL AROUND WELDS SHALL BE DISCONTINUOUS AT THE FLANGE TIPS OF OPEN SECTIONS.
13. MEMBER SPLICES SHALL BE DESIGNED AND DETAILED TO DEVELOP THE FULL STRENGTH OF THE MEMBER OR COMPONENTS BEING CONNECTED.
14. STRUCTURAL STEEL DETAILS NOT SPECIFICALLY SHOWN SHALL BE TAKEN AS BEING SIMILAR TO THAT SHOWN IN CORRESPONDING CONDITIONS.
15. DETAILS AND CONNECTIONS EXPLICITLY DETAILED IN THE CONTRACT DRAWINGS MAY NOT BE ALTERED WITHOUT WRITTEN APPROVAL BY THE ENGINEER. ALTERED CONNECTIONS SHALL BE COMPLETELY DETAILED AND DESIGNED BY THE FABRICATOR'S ENGINEER AND CLEARLY MARKED ON THE SHOP DRAWINGS.
16. SUBMIT CALCULATIONS FOR CONNECTION DESIGNS NOT FULLY DETAILED ON DRAWINGS. DESIGN CONNECTIONS UNDER SUPERVISION OF REGISTERED PROFESSIONAL ENGINEER, REGISTERED IN THE STATE WHERE PROJECT IS BEING CONSTRUCTED, EMPLOYED BY THE STEEL FABRICATOR. DESIGN CALCULATIONS TO BE SEALED BY FABRICATOR'S REGISTERED PROFESSIONAL ENGINEER. SHOP DRAWINGS SUBMITTED WITHOUT COMPLETE DESIGN CALCULATIONS WILL NOT BE REVIEWED.
17. WIDE FLANGE BEAM-TO-BEAM AND BEAM-TO-COLUMN CONNECTIONS SHALL MEET OR EXCEED THE FACTORED SHEAR DESIGN STRENGTH REQUIREMENTS (LRFD)(KIPS) INDICATED IN THE "WF BEAM FACTORED SHEAR DESIGN STRENGTH" SCHEDULE.
18. BEAM REACTIONS (Ru = "XX" KIPS INDICATED IN THE DRAWINGS SUPERSEDE THE TABLE ABOVE.
19. SEATED BEAM CONNECTIONS ARE NOT ALLOWED UNLESS USED FOR ERECTION PURPOSES ONLY.
20. THE MINIMUM THICKNESS FOR A STRUCTURAL CONNECTION PLATE IS 3/8".
21. BEAM AND GIRDER SHEAR CONNECTIONS TO COLUMNS SHALL BE DESIGNED AND DETAILED TO BE CAPABLE OF END ROTATION PER AISC.
22. CONNECTIONS WITH AXIAL LOAD THROUGH-FORCES AS INDICATED ON PLAN, SHALL BE DESIGNED FOR SHEAR AND AXIAL FORCES SIMULTANEOUSLY.
23. TENSION AND COMPRESSION MEMBER END CONNECTIONS SHALL DEVELOP THE FORCE DUE TO THE POSTED DESIGN LOAD, BUT NOT LESS THAN 100% OF THE TENSION CAPACITY OF THE MEMBER WHERE NO DESIGN LOAD IS POSTED. THE TENSION CAPACITY SHALL BE APPLIED AS A LOAD IN BOTH TENSIONS AND COMPRESSION.
24. ALL BOLTED STRUCTURAL CONNECTIONS SHALL BE MADE WITH 3/4" DIAMETER A325 BOLTS, MINIMUM.
25. ALL STRUCTURAL BOLTS SHALL BE TENSION CONTROLLED AS SPECIFIED IN AISC MANUAL TABLE J3.1 (14TH ED).
26. STRUCTURAL BOLTS CONFINED BY STRUCTURE GEOMETRY THAT CANNOT BE INSTALLED USING CONTROLLED BOLT TENSION, SHALL BE HAND TIGHTENED USING A WRENCH AND CLEARLY MARKED ON THE STRUCTURAL STEEL AS "HT".
27. PROVIDE FULL-DEPTH WELDED STIFFENER PLATES ON BOTH SIDES OF A BEAM WEB UNDER CONCENTRATED LOAD DUE TO A BEAM OVER COLUMN, COLUMN UP, OR STRUCTURAL HANGER CONDITION.
28. ALL CONNECTIONS AT HSS SECTIONS SHALL BE DESIGNED AND DETAILED IN ACCORDANCE WITH THE AISC "LRFD SPECIFICATIONS FOR STEEL HOLLOW STRUCTURAL SECTIONS".
29. RECTANGULAR HSS MEMBERS ARE TO BE ORIENTED LLV U.N.O
30. ALL HSS SHAPES, EXCEPT DIAGONAL BRACING MEMBERS, ARE TO HAVE 1/4" CAP PLATES, FULLY SEAL WELDED ALL AROUND.
31. ALL STRUCTURAL STEEL, INCLUDING BASEPLATES AND TOP OF ANCHOR BOLTS, TO BE EXPOSED TO SOIL OR TO BE ENCASED IN CONCRETE SHALL BE COATED WITH 16 MILS COAL TAR EPOXY.
32. FIELD MODIFICATIONS OF STRUCTURAL STEEL MEMBERS AND CONNECTIONS, SHALL NOT BE MADE WITHOUT APPROVAL FROM THE ENGINEER.
33. BEAMS ARE NOT DESIGNED TO SUPPORT LATERAL LOADS, OR OUT-OF-PLANE BENDING, AT THE BOTTOM FLANGE THAT MAY RESULT OTHER TRADES. BEAMS SHALL BE BRACED OR SUPPORTED TO RESIST SUCH FORCES.
34. BEAM WEB PENETRATIONS OR COPES REQUIRED FOR COORDINATION WITH OTHER TRADES SHALL BE SHOWN ON THE SHOP DRAWINGS AND MADE IN THE SHOP WHENEVER POSSIBLE.
35. SPLICING OF STRUCTURAL MEMBERS IS PROHIBITED WITHOUT PRIOR APPROVAL OF THE ENGINEER UNLESS SPECIFICALLY INDICATED IN THE CONTRACT DRAWINGS.
36. DOUBLE ANGLE OR CHANNEL MEMBERS SHALL HAVE BOLTS PLATE SPACERS AT NO MORE THAN 4'-0" O.C. ALONG THE MEMBER LENGTH.

**LIGHT GAGE STEEL FRAMING:**

1. LIGHT GAGE STEEL FRAMING SHALL BE ENGINEERED AND DETAILED BY THE LIGHT GAGE SUBCONTRACTOR. SUBMIT SHOP DRAWINGS AND CALCULATIONS SEALED BY A PROFESSIONAL ENGINEER REGISTERED IN THE STATE OF THIS PROJECT.
2. INFORMATION SHOWN ON THESE DRAWINGS THAT PERTAINS TO LIGHT GAGE METAL FRAMING IS ONLY SHOWN TO CONCEPTUALLY CONVEY ATTACHMENT POINTS TO THE BUILDING STRUCTURE OR TO INDICATE SPECIAL CONFIGURATIONS THAT ARE IMPORTANT TO THE FINISHED BUILDING.
3. REFER TO ARCHITECTURAL DRAWINGS FOR LIGHT GAGE LOCATIONS, CONFIGURATIONS, AND ASSEMBLIES.
4. ALL NON-LOAD BEARING LIGHT GAGE METAL FRAMING THAT FRAMES BETWEEN TWO SEPARATE FLOOR LEVELS SHALL BE INSTALLED WITH A SLIP CONNECTION TO ALLOW FOR DIFFERENTIAL VERTICAL MOVEMENT BETWEEN THE FLOORS. PROVIDE FOR VERTICAL DEFLECTION OF 3/4" OR L/360, WHICHEVER IS GREATER.

**INSPECTIONS - METAL DECK:**

1. TESTING AND INSPECTIONS SHALL BE CONDUCTED BY AN APPROVED TESTING AGENCY RETAINED BY AND PAID BY THE OWNER.
2. THE TESTING AGENCY SHALL BE SUPPLIED WITH (1) A FINAL SET OF METAL DECK SHOP DRAWINGS (2) ADEQUATE NOTICE OF COMPLETION TO PERFORM INSPECTION PRIOR TO SLAB PLACEMENT.
3. THE TESTING AGENCY SHALL INSPECT THE METAL DECK AND SHEAR STUD INSTALLATION AS FOLLOWS TO CONFIRM THEY CONFORM TO THE DRAWINGS, SPECIFICATIONS, AND DESIGN STANDARDS.
4. METAL DECKING – TESTING AGENCY SHALL VISUALLY INSPECT ALL METAL DECK TO CONFIRM IT HAS BEEN INSTALLED IN ACCORDANCE WITH THE APPROVED SHOP DRAWINGS. ADDITIONALLY, DECK WELDS SHALL BE VISUALLY INSPECTED FOR SIZE AND SPACING TO CONFIRM THEY MEET THE REQUIREMENTS OF THE CONTRACT DOCUMENTS.
5. SHEAR STUDS – THE TESTING AGENCY SHALL INSPECT SHEAR STUDS FOR SPACING, QUANTITY, AND CLEARANCES. ADDITIONALLY, ALL STUDS SHALL BE INSPECTED ACOUSTICALLY. STUDS THAT DO NOT RING WHEN STRUCK WITH A HAMMER SHALL STUCK UNTIL BENT TO 15 DEGREES. AT A MINIMUM 1 IN 100 STUDS SHALL BE BENT TO 15 DEGREES, AND CONSIDERED ACCEPTABLE IF NO FRACTURE OCCURS. IF AT ANY POINT THE FAILURE RATE EXCEEDS 3%, THE TESTING RATE SHALL BE INCREASED TO 1 IN 25 UNTIL THE FAILURE RATE FALLS BELOW 3%.
6. REPORTS – THE TESTING AGENCY SHALL DISTRIBUTE REPORTS AS EARLY AS POSSIBLE TO NOTIFY ALL PARTIES OF ANY DEFICIENCIES. IF DEFICIENCIES REQUIRE IMMEDIATE ATTENTION THE ENGINEER SHALL BE NOTIFIED AS SOON AS POSSIBLE VIA PHONE.

**CONCRETE:**

1. ALL CONCRETE WORK SHALL CONFORM TO THE 2014 EDITION OF THE ACI BUILDING CODE REQUIREMENTS FOR REINFORCED CONCRETE (ACI 318) AND THE COMMONWEALTH OF MASSACHUSETTS STATE BUILDING CODE. IN CASE OF CONFLICT, THE MASSACHUSETTS STATE BUILDING CODE SHALL GOVERN.
2. CONCRETE SHALL BE NORMAL WEIGHT CONCRETE UNLESS OTHERWISE NOTED WITH SAND AND GRAVEL AGGREGATE, TYPE I OR TYPE II PORTLAND CEMENT AND MINIMUM COMPRESSIVE STRENGTH (F'C) IN 28 DAYS AS SPECIFIED IN CONCRETE STRENGTH TABLE.
3. ALL CONCRETE EXPOSED TO THE WEATHER OR POSSIBLE FREEZE/THAW ACTION SHALL CONTAIN AN AIR ENTRAINMENT ADMIXTURE, AIR CONTENT = 6% +/-1.5%.
4. GROUT UNDER COLUMN BASE PLATES AND UNDER OTHER BEARING PLATES SHALL BE NON-SHRINK, NONMETALLIC GROUT WITH A MINIMUM COMPRESSIVE STRENGTH OF 5000 PSI AT 3 DAYS.
5. ALL EXPOSED EDGES OF CONCRETE MEMBERS SHALL BE CHAMFERED 3/4" UNLESS SHOWN OTHERWISE ON ARCHITECTURAL DRAWINGS.
6. SEE ARCHITECTURAL DRAWINGS FOR DOOR AND WINDOW OPENINGS, DRIPS, WASHES, REGLETS, CONCRETE FINISHES, MASONRY ANCHORS, AND FOR MISCELLANEOUS EMBEDDED PLATES, BOLTS, ANCHORS, ANGLES, ETC.
7. CONCRETE CLEAR COVER ON REINFORCEMENT SHALL BE AS SPECIFIED IN THE CONCRETE COVER TABLE.
8. SEE TYPICAL DETAIL FOR SAWCUT CONTROL JOINTS IN SLABS-ON-GRADE. THE SAWCUTTING OPERATION SHALL BEGIN AS SOON AS THE SAW WILL NOT RAVEL EDGES OR DISLODGE THE AGGREGATE, BUT IN NO CASE LONGER THAN 12 HOURS AFTER PLACING THE SLAB.
9. U.N.O. PROVIDE DOWELS TO MATCH MAIN REINFORCEMENT SIZE AND SPACING. PROVIDE A CLASS B LAP SPLICE U.N.O.
10. PROVIDE EPOXY COATED REBAR IN ALL EXTERIOR CONCRETE AND PARKING SLABS.
11. REFER TO ACI 305 FOR REQUIREMENTS WHEN PLACING CONCRETE IN HOT WEATHER. REFER TO ACI 306 FOR REQUIREMENTS WHEN PLACING CONCRETE IN COLD WEATHER.
12. ON STEEL FRAMED FLOORS, PROVIDE ADDITIONAL CONCRETE AS NECESSARY TO FINISH THE FLOORS TO WITHIN THE TOLERANCES IN THE SPECIFICATION, WHILE ACCOUNTING FOR DECK AND STEEL BEAM DEFLECTION. ALLOW FOR AN AVERAGE OF 1/2" ADDITIONAL CONCRETE FOR EACH FLOOR. IF NO SPECIFICATIONS ARE PROVIDED, FINISH FLOOR TO FF=25 AND TO WITHIN A 1/4" IN 10FT ENVELOPE.
13. SUBMIT ENGINEERED CONCRETE MIXES INCLUDING REQUIRED BACKUP DATA FOR EACH TYPE OF CONCRETE TO BE USED TO THE ARCHITECT/ENGINEER FOR REVIEW. CLEARLY NOTE WHERE EACH MIX WILL BE USED.

**SUBMITTALS:**

1. SHOP DRAWINGS SHALL BE SUBMITTED TO THE ARCHITECT AND ENGINEEER FOR REVIEW PRIOR TO FABIRCATION. SUBMISSIONS SHALL BE SUBMITTED TO PROVIDE AMPLE TIME FOR REVIEW (A MINIMUM OF 2 WEEKS).
2. AS A MINIMUM THE FOLLOWING STRUCTURAL SUBMITTALS SHALL BE PROVIDED:
   A. EACH CONCRETE MIX DESIGN SHALL BE SUBMITTED FOR REVIEW WITH THE FOLLOWING INFORMATION (AS A MINIMUM):
      a. INTENDED USE OF MIX (I.E. WHERE ON THE PROJECT WILL MIX BE USED.
      b. MIX PROPORTIONS, INCLUDING ALL ADMIXTURES USED.
      c. MANUFACTURE'S DATA AND/OR CERTIFICATIONS VERIFYING CONFORMANCE OF ALL MIX MATERIALS, INCLUDING ADMIXTURES, WITH SPECIFIED REQUIREMENTS.
      d. UNIT WEIGHT.
      e. SLUMP.
      f. REQUIRED AVERAGE STRENGTH QUALIFICATION DATA PERN ACI 301 3.9.1 AND 3.9.2.
   B. REBAR SHOP DRAWINGS – DRAWINGS SHALL INDICATE BAR SIZE, BAR GRADE, BAR LAYOUT, BAR SPACING, CHAIR SUPPORTS, AND BENDING DETAILS. DETAILING SHALL COMPLY WITH ACI DETAILING MANUAL.
   C. STRUCTURAL STEEL SHOP DRAWINGS. CLEARLY INDICATE PROFILES, SIZES, SPACING AND LOCATIONS OF STRUCTURAL MEMBERS, CONNECTIONS ATTACHMENTS, ANCHORAGES, FRAMED OPENINGS, SIZE AND TYPE OF FASTENERS, CAMBERS, AND CLEARANCES. INDICATE WELDED CONNECTIONS USING STANDARD AWS WELDING SYMBOLS. CLEARLY INDICATE NET WELD LENGTHS, SIZES, AND WELDING SEQUENCES. CLEARLY IDENTIFY ALL HIGH STRENGTH BOLTS NOT REQUIRED TO BE TENSIONED (INSTALLED "SNUG TIGHT AS IDENTIFIED BY AISC).
   D. METAL DECK SHOP DRAWINGS. INDICATE DECKING PLAN, DECK PROFILE, DECK GAGE, ATTACHMENT FASTENING AND SPACING, SUPPORT LOCATIONS, DECK OVERHANGS, POUR STOPS, OPENINGS, FINISHES, DETAILS AND SECTIONS AS REQUIRED.
   E. WOOD TRUSS SHOP DRAWINGS. REFER TO WOOD TRUSS NOTES SECTION FOR SUBMITTAL REQUIREMENTS.
   F. LIGHT GAUGE STEEL FRAMING SHOP DRAWINGS. CLEARLY INDICATE PROFILES, SIZES, SPACING AND LOCATIONS OF MEMBERS, CONNECTIONS ATTACHMENTS, ANCHORAGES, FRAMED OPENINGS, SIZE AND TYPE OF FASTENERS. INDICATE WELDED CONNECTIONS USING STANDARD AWS WELDING SYMBOLS.

**INSPECTIONS - CONCRETE:**

1. TESTING AND INSPECTIONS SHALL BE CONDUCTED BY AN APPROVED TESTING AGENCY RETAINED BY AND PAID BY THE OWNER.
2. THE TESTING AGENCY SHALL BE SUPPLIED WITH (1) A FINAL SET OF REBAR SHOP DRAWINGS (2) ADEQUATE NOTICE OF CONCRETE POUR TO PERFORM REBAR INSPECTION AND BE PRESENT AS REQUIRED FOR CONCRETE TESTING
3. THE TESTING AGENCY SHALL INSPECT REBAR AND TEST CONCRETE AS FOLLOWS TO CONFIRM THEY CONFORM TO THE DRAWINGS, SPECIFICATIONS, AND DESIGN STANDARDS.
4. REINFORCING STEEL – ALL REINFORCING SHALL BE INSPECTED PRIOR TO CLOSING FORMWORK. INSPECTOR SHALL INSPECT FOR REBAR SIZE, SPACING, QUANTITY, AND CONFIGURATION.
5. CONCRETE PLACEMENT – CONCRETE SHALL BE TESTED FOR SLUMP, AIR CONTENT, TEMPERATURE, UNIT WEIGHT, AND CONFIRMATION THAT THE CORRECT MIX IS BEING USED. TESTING AGENCY SHALL ALSO CONFIRM THAT NO WATER IS ADDED TO THE MIX ON-SITE UNLESS IT HAS SPECIFICALLY BEEN NOTED AS HOLD BACK WATER.
6. TIME TO PLACEMENT – TESTING AGENCY SHALL CONFIRM THAT ALL CONCRETE IS PLACED WITHIN 90 MINUTES OF BEING BATCHED AT THE PLANT.
7. CONCRETE CYLINDERS – TESTING AGENCY SHALL TAKE AT LEAST ONE SET OF CONCRETE CYLINDERS FOR EACH 50 CUBIC YARDS OF CONCRETE PLACED FOR EACH CLASS OF CONCRETE POURED EACH DAY. FOR PUMPED CONCRETE CYLINDERS SHALL BE TAKEN AT THE POINT OF PLACEMENT. SAMPLES SHALL BE TAKEN IN ACCORDANCE WITH ASTM C172. MARKING, CURING, AND HANDLING OF CYLINDERS SHALL BE IN ACCORDANCE WITH ASTM C31. TESTING OF CYLINDERS SHALL BE IN ACCORDANCE WITH ASTM C39. 4 CYLINDERS SHALL BE OBTAINED AND TESTED AS FOLLOWS: (1) CYLINDER AT 7 DAYS, (2) CYLINDERS AT 28 DAYS. IF THE CYLINDERS AT 28 DAYS DO NOT REACH THE DESIGN STRENGTH, THE 4TH CYLINDER SHALL BE TESTED AT 56 DAYS.
8. REPORTS – THE TESTING AGENCY SHALL DISTRIBUTE REPORTS AS EARLY AS POSSIBLE TO NOTIFY ALL PARTIES OF ANY DEFICIENCIES. IF DEFICIENCIES REQUIRE IMMEDIATE ATTENTION THE ENGINEER SHALL BE NOTIFIED AS SOON AS POSSIBLE VIA PHONE.

**INSPECTIONS - STRUCTURAL STEEL:**

1. TESTING AND INSPECTIONS SHALL BE CONDUCTED BY AN APPROVED TESTING AGENCY RETAINED BY AND PAID BY THE OWNER.
2. THE TESTING AGENCY SHALL BE SUPPLIED WITH (1) A FINAL SET OF STEEL SHOP DRAWINGS (2) ADEQUATE NOTICE OF FIREPROOFING OPERATIONS OR OTHER OPERATIONS THAT WILL IMPEDE ADEQUATE STEEL INSPECTIONS (3) ADEQUATE ASSISTANCE WITH SCAFFOLDING, LIFTS, LADDERS, ETC. TO FULLY INSPECT THE STEEL AS REQUIRED.
3. THE TESTING AGENCY SHALL INSPECT THE STRUCTURAL STEEL FOR THE FOLLOWING TO CONFIRM THAT THE INSTALLATION CONFORMS TO THE DRAWINGS, SPECIFICATIONS, AND DESIGN STANDARDS.
4. FITUP AND ALIGNMENT – TESTING AGENCY SHALL REVIEW THE STRUCTURAL STEEL FOR PROPER FITUP AND ALIGNMENT.
5. GENERAL WELDING – TESTING AGENCY SHALL OBSERVE AND CONFIRM THE FOLLOWING (1) THAT THE APPROVED WELDING PROCEDURE AND SEQUENCE IS FOLLOWED (2) THAT ALL WELDING IS PERFORMED BY WELDERS THAT ARE PROPERLY CERTIFIED PER AWS (3) THAT ALL JOINT PREP, WELD SIZE, AND WELD TYPES CONFORM TO THE CONTRACT DOCUMENTS (4) THAT ALL WELDS HAVE BEEN COMPLETED AND NO WELDS HAVE BEEN ADDED WITHOUT PROPER APPROVAL.
6. WELD INSPECTION – FIELD WELDING SHALL BE TESTED PER AWS D1.1 AS FOLLOWS (1) ALL FIELD WELDS SHALL BE 100% VISUALLY INSPECTED (2) FILLET WELDS SHALL HAVE ONE SPOT TEST PER MEMBER USING MAGNETIC PARTICLE TESTING (3) PARTIAL PENETRATION WELDS SHALL HAVE ONE SPOT TEST PER MEMBER USING MAGNETIC PARTICLE TESTING (4) FULL PENETRATION WELDS SHALL BE 100% TESTED USING ULTRASONIC TESTING (5) 10% OF ALL OTHER WELDS SHALL BE TESTED USING MAGNETIC PARTICLE TESTING. (6) IN THE CASE THAT DEFECTIVE WELDS ARE FOUND, THE REMAINING UNTESTED WELDS SHALL BE TESTED USING THE SAME MEANS DESCRIBED ABOVE.
7. BOLTS – THE TESTING AGENCY SHALL INSPECT ALL BOLTED CONNECTIONS TO CONFIRM THAT ALL BOLTS HAVE BEEN INSTALLED AND PROPERLY TORQUED PER THE APPROVED SHOP DRAWINGS.
8. REPORTS – THE TESTING AGENCY SHALL DISTRIBUTE REPORTS AS EARLY AS POSSIBLE TO NOTIFY ALL PARTIES OF ANY DEFICIENCIES. IF DEFICIENCIES REQUIRE IMMEDIATE ATTENTION THE ENGINEER SHALL BE NOTIFIED AS SOON AS POSSIBLE VIA PHONE.

**MASONRY STEEL LINTEL SCHEDULE**

| OPENING WIDTH | 4" WALL | 6" WALL | 8" WALL | 12" WALL |
|---|---|---|---|---|
| L < 5'-0" | L4x3 1/2x5/16 | L6x6x5/16 | (2)-L4x3 1/2x5/16 | (2)-L6x6x5/16 |
| 5'-0" < L < 7'-0" | L5x3 1/2x5/16 | L6x6x5/16 | (2)-L5x3 1/2x5/16 | (2)-L6x6x5/16 |
| 7'-0" < L < 9'-0" | L6x3 1/2x3/8 | L6x6x3/8 | (2)-L6x3 1/2x3/8 | (2)-L6x6x3/8 |
| 9'-0" < L < 12'-0" | L6x3 1/2x1/2 | L6x6x1/2 | (2)-L6x3 1/2x1/2 | (2)-L6x6x1/2 |

1. LINTELS THAT ARE PART OF THE EXTERIOR WALL ASSEMBLY OR EXPOSED TO WEATHER SHALL BE HOT DIPPED GALVANIZED.
2. LINTELS SHALL HAVE A MINIMUM 8" BEARING ON EACH SIDE OF OPENING.
3. LINTELS IN PAIRS SHALL BE STITCH WELDED TOGETHER AT 18" O.C.
4. PROVIDE LINTELS FOR MASONRY OPENINGS IN ACCORDANCE WITH THIS SCHEDULE UNLESS SHOWN OTHERWISE ON DRAWINGS.
5. AT WALLS THICKER THAN 12" PROVIDE ONE LINTEL PER EACH 4" OR 6" OF WALL THICKNESS PER THE TABLE ABOVE. FOR EXAMPLE, AN 18" THICK WALL WITH AN 6'-0" OPENING REQUIRES (3)-L6X6X5/16.

**MINIMUM CMU WALL REINFORCING**

| WALL DEPTH | HEIGHT<=8FT | 8FT<HEIGHT<=12FT | 12FT<HEIGHT<=20FT |
|---|---|---|---|
| 6" INTERIOR | #4@48" O.C. | #4@48" O.C. | NOT PERMITTED |
| 8" INTERIOR | #4@48" O.C. | #4@48" O.C. | #5@48" O.C. |
| 8" EXTERIOR | #4@48" O.C. | #5@32" O.C. | NOT PERMITTED |
| 10" EXTERIOR | #4@48" O.C. | #5@32" O.C. | #5@8" O.C. |
| 8" PARKING (W/ POTENTIAL VEHICLE IMPACT) | #6@24" O.C. | #6@24" O.C. | #6@24" O.C. UP TO 16FT TALL |

**NOTES:**

1. REINFORCING APPLIES TO NON-LOAD BEARING CMU WALLS ONLY. FOR STRUCTURAL LOAD BEARING WALLS (SEE PLANS)

**WF BEAM FACTORED SHEAR DESIGN STRENGTH**

| BEAM DESIGN | BOLT ROWS | SHEAR DESIGN (KIPS) |
|---|---|---|
| W8X10, W10X12 | 2 | 18.5 |
| W8X13-15, W10X15 | 2 | 24.0 |
| W8X18-24, W10X17-26 | 2 | 26.9 |
| W8≥28, W10≥30 | 2 | 34.8 |
| W12X14-16 | 3 | 33.0 |
| W12X19-30, W14X22-30 | 3 | 40.2 |
| W12X35-45, W14X34-48 | 3 | 52.1 |
| W12≥50, W14≥53 | 3 | 63.0 |
| W16X26-31 | 4 | 60.0 |
| W16X36-40, W18X35-40 | 4 | 71.9 |
| W16≥45, W18X46-55 | 4 | 84.2 |
| W18≥60, W21X44-62, W24X55 | 5 | 106.7 |
| W21≥68, W24X62-76 | 5 | 126.5 |
| W24≥84, W27X84 | 6 | 151.8 |
| W27≥94, W30X90-99 | 7 | 195.0 |
| W30≥108 | 8 | 230.0 |
| W33 | 9 | 260.0 |
| W36 | 10 | 290.0 |
| W40, W44 | 11 | 319.0 |

**STRUCTURAL STEEL MATERIAL PROPERTIES**

| STRUCTURAL SECTION | MATERIAL PROPERTIES (U.N.O.) |
|---|---|
| WF, S & M | ASTM 992 or A572, GRADE 50 |
| HSS | ASTM A-500 GRADE B |
| MC, C | ASTM A-36 |
| ANGLE | ASTM A-36 |
| PLATE | ASTM A-36 |
| BARS | ASTM A-36 |
| PIPE | ASTM A-53 GRADE B |
| HIGH STRENGTH BOLTS | ASTM A325 |
| ANCHOR BOLTS | ASTM F-1554 GRADE 36 |

**CONCRETE STRENGTH**

| MIX USE | f'c (PSI) (28-DAY) | NOTES |
|---|---|---|
| SPREAD FOOTINGS | 4000 | |
| PIERS | 4000 | |
| GRADE BEAMS | 4000 | |
| FOUNDATION WALLS | 4000 | |
| SLABS-ON-GRADE | 4000 | |
| OTHER FOUNDATION CONCRETE | 4000 | |
| STRUCTURAL SLABS AND BEAMS | 5000 | |
| SLABS ON METAL DECK | 4000 | |
| SLABS EXPOSED TO FREEZE THAW | 5000 | W/ AIR ENTRAINMENT |
| FILL CONCRETE | 3000 | |
| MUD MATS | 2000 | |
| STEEL MEMBER ENCASEMENT | 3000 | |

**CONCRETE COVER**

| BAR TYPE | CONCRETE COVER |
|---|---|
| SURFACES CAST AGAINST EARTH | 3" |
| FORMED SURFACES EXPOSED TO EARTH OR WEATHER | @ #5 BARS AND SMALLER = 1 1/2"<br>@ #6 BARS AND GREATER = 2" |
| FORMED SURFACES NOT EXPOSED TO EARTH OR WEATHER AT SLABS, WALLS, JOISTS | @ #11 BARS AND SMALLER = 3/4"<br>@ #11 BARS AND GREATER = 1 1/2" |
| FORMED SURFACES NOT EXPOSED TO EARTH OR WEATHER AT BEAMS AND COLUMNS | 1 1/2" |
| SLABS-ON-GRADE (FROM TOP OF SLAB) | 1 1/2" |
| SLABS-ON-METAL DECK | 3/4" @ TOP<br>3/4" @ BOTTOM |
| SLABS-ON-METAL DECK (AT PARKING LEVELS) | 1 1/2" @ TOP<br>3/4" @ BOTTOM |

Bergmeyer
www.bergmeyer.com
BOS - 51 Sleeper St. 6th Floor Boston, MA 02210 617.542.1025
LA - 800 South Figueroa St. Suite 1080 Los Angeles, CA 90017 212.337.1090

CONSULTANTS:
H+O STRUCTURAL ENGINEERING
51 MELCHER ST, FLR 1
BOSTON, MA 02210
617-938-3349

SEAL/ SIGNATURE:
STATE OF MISSOURI
JEREMIAH C. O'NEILL
NUMBER PE-2020009130
PROFESSIONAL ENGINEER

| NO. | BY | DATE | DESCRIPTION |
|---|---|---|---|

SHAKE SHACK

SHAKE SHACK - LEE'S SUMMIT MO

2051 NW LOWENSTEIN DRIVE
LEE'S SUMMIT, MISSOURI 64081
SHACK #1348

PERMIT/BID SET

GENERAL NOTES II

| | |
|---|---|
| DRAWN BY: | ESP |
| CHECKED BY: | RFH |
| JOB NO: | 20-128 |

S002

1/11/2021 12:46:49 PM C:\Users\EricPicard\Hayes & O'Neill\20-128 Shake Shack Lees Summit - Documents\03 Structural Drawings\Structural Revit\20-128 Shake Shack Lee's Summit - Structural - R2019.rvt

RELEASE FOR CONSTRUCTION
AS NOTED ON PLANS REVIEW
DEVELOPMENT SERVICES
LEE'S SUMMIT, MISSOURI
03/10/2021

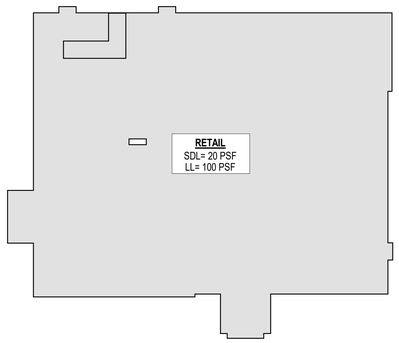


## GROUND LOAD PLAN
SCALE: 3/32" = 1'-0"

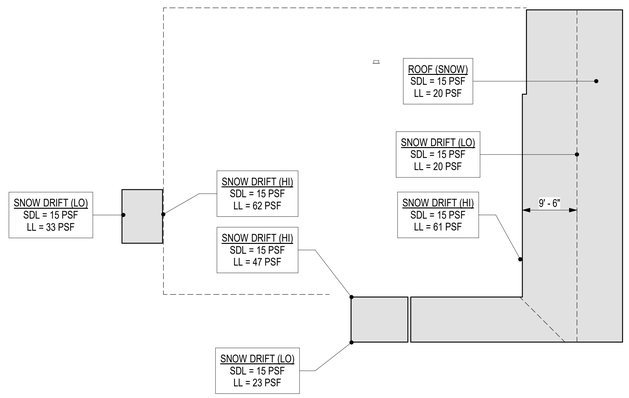


## CANOPY LOAD PLAN
SCALE: 3/32" = 1'-0"

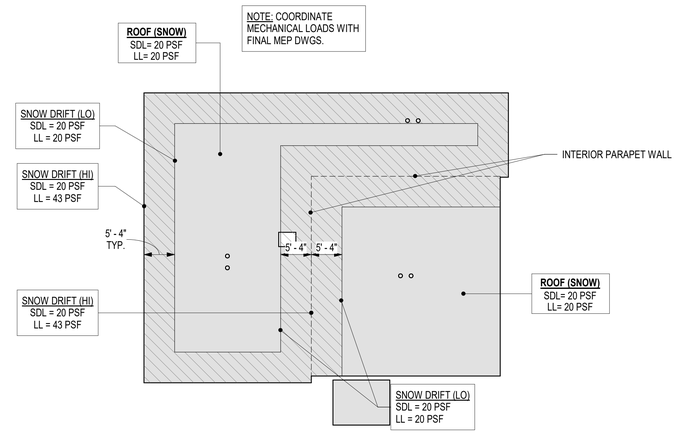


## ROOF LOAD PLAN
SCALE: 3/32" = 1'-0"

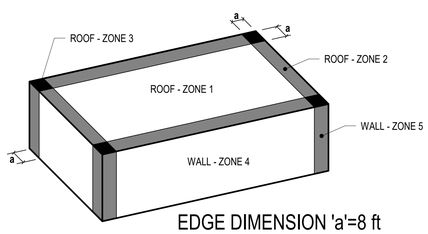


## COMPONENT & CLADDING WIND PRESSURES
SCALE: 1/8" = 1'-0"

**COMPONENTS & CLADDING WIND PRESSURES**

| CLADDING ZONE | ZONE 1 - ROOF INTERIOR | | ZONE 2 - ROOF EDGE | | ZONE 3 - ROOF CORNER | | ZONE 4 - WALL INTERIOR | | ZONE 5 - WALL EDGE | |
|---|---|---|---|---|---|---|---|---|---|---|
| 10 SF | -24.7 | 10.1 | -41.5 | 10.1 | -62.5 | 10.1 | -24.5 | 22.6 | -30.2 | 22.6 |
| 20 SF | -24.1 | 9.4 | -37.1 | 9.4 | -51.7 | 9.4 | -23.5 | 21.6 | -28.2 | 21.6 |
| 50 SF | -23.3 | 8.6 | -31.2 | 8.6 | -37.6 | 8.6 | -22.2 | 20.3 | -25.5 | 20.3 |
| 100 SF | -22.6 | 8.0 | -26.8 | 8.0 | -26.8 | 8.0 | -21.2 | 19.3 | -23.5 | 19.3 |

1. CLADDING PRESSURES ARE CALCULATED PER ASCE 7-10 AND ARE ULTIMATE LOADS. PRESSURES CAN BE CONVERTED TO ASD WIND PRESSURES BY MULTIPYING THE ULTIMATE PRESSURES BY 0.6.

2. POSITIVE PRESSURES ARE TOWARD THE SURFACE. NEGATIVE PRESSURES ARE AWAY FROM THE SURFACE.

**LOADING PLAN NOTES:**

1. LOADING PLANS ARE SHOWN DIAGRAMMATICALLY, REFER TO ARCHITECTURAL DRAWINGS FOR SPECIFIC LOCATIONS OF SPACES CORRESPONDING TO EACH LOADING SHOWN.
2. SDL - INDICATES SUPERIMPOSED DEAD LOAD. WHEN NO PARTITION LOADING IS INCLUDED IN THE LIVE LOAD, IT IS INCLUDED AS PART OF THE SUPERIMPOSED DEAD LOAD.
3. LL - INDICATES LIVE LOAD OR SNOW LOAD. WHEN NOTED AS "50+15 PSF" THE +15 PSF IS AN ALLOWANCE FOR PARTITION LIVE LOAD.

**STRUCTURAL LOADS:**

BUILDING CODE - 2018 INTERNATIONAL BUILDING CODE WITH ORDINANCE 8536

RISK CATEGORY = II

BUILDING DESIGNED FOR ADDITIONAL VERTICAL EXPANSION = NO
BUILDING DESIGNED FOR ADDITIONAL HORIZONTAL EXPANSION = NO

DEAD LOADS
WEIGHT OF BUILDING MATERIALS BEAMS, SLABS, COLUMNS, ETC.

SUPERIMPOSED DEAD LOADS
SEE LOADING PLANS
NOTE - SLAB-ON-DECK FLOORS ARE DESIGNED TO ACCOMODATE AN ADDITIONAL 1/2" AVERAGE THICKNESS OF CONCRETE TO ALLOW FOR OVERPOURING TO MITIGATE METAL DECK DEFLECTION.

SUPERIMPOSED LIVE LOADS
SEE LOADING PLANS

SNOW LOADS
SEE LOADING PLANS, SNOW LOADS SHOWN ARE FLAT ROOF SNOW LOADS (Pf) AND SNOW DRIFTS CALCULATED PER ASCE 7-16.

WIND LOADS
BASIC WIND SPEED = 109 MPH
WIND EXPOSURE CATEGORY = B
WIND LOADS HAVE BEEN CALCULATED PER ASCE 7-16

SEISMIC LOADS
SEISMIC IMPORTANCE FACTOR = 1.0
SITE CLASSIFICATION = D
DESIGN SPECTRAL RESPONSE ACCELERATIONS
SDS = 0.106
SD1 = 0.109
SEISMIC DESIGN CATEGORY= B
N-S SEISMIC LATERAL SYSTEM = ORDINARY CONCENTRIC BRACED FRAMES
RESPONSE MODIFICATION COEFFICIENT, R = 3
SEISMIC BASE SHEAR 21 KIPS

E-W SEISMIC LATERAL SYSTEM = ORDINARY CONCENTRIC BRACED FRAMES
RESPONSE MODIFICATION COEFFICIENT, R = 3
SEISMIC BASE SHEAR = 21 KIPS

Bergmeyer
BOS - 51 Sleeper St. 6th Floor Boston, MA 02210 617.542.1025
LA - 800 South Figueroa St. Suite 1080 Los Angeles, CA 90017 212.337.1050
www.bergmeyer.com

CONSULTANTS:

T+O STRUCTURAL ENGINEERING
51 MELCHER ST, FLR 1
BOSTON, MA 02210
617-938-3349

SEAL/ SIGNATURE:

STATE OF MISSOURI
JEREMIAH C. O'NEILL
NUMBER
PE-2020009130
PROFESSIONAL ENGINEER

| NO. | BY | DATE | DESCRIPTION |
|---|---|---|---|

SHAKE SHACK

SHAKE SHACK - LEE'S SUMMIT MO

2051 NW LOWENSTEIN DRIVE
LEE'S SUMMIT, MISSOURI 64081
SHACK #1348

PERMIT/BID SET

LOADING PLANS

| | |
|---|---|
| DRAWN BY: | ESP |
| CHECKED BY: | RFH |
| JOB NO: | 20-128 |

S003

1/11/2021 12:45:50 PM C:\Users\EricPearch\Hayes & O'Neill\20-128 Shake Shack Lees Summit - Documents\03 Structural\Drawings\Structural Revit\20-128 Shake Shack Lee's Summit - Structural - R2019.rvt

RELEASE FOR CONSTRUCTION
AS NOTED ON PLANS REVIEW
DEVELOPMENT SERVICES
LEE'S SUMMIT, MISSOURI
03/10/2021

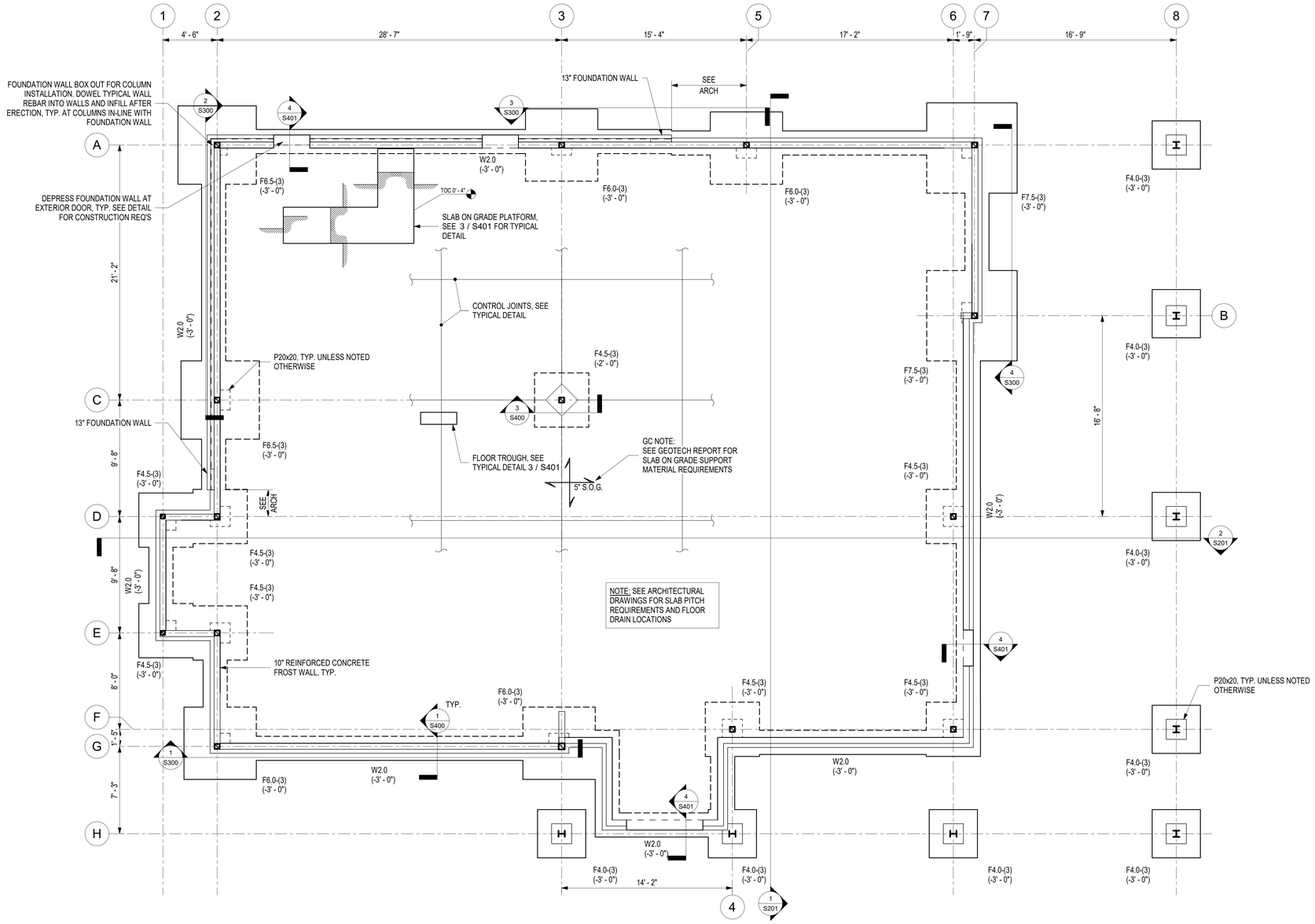


1 S201 FOUNDATION PLAN
SCALE: 1/4" = 1'-0"

## WALL FOOTING SCHEDULE

| TYPE | WIDTH | THICKNESS | LONG REINFORCEMENT | SHORT REINFORCEMENT | COMMENTS |
|---|---|---|---|---|---|
| W2.0 | 2' - 0" | 1' - 0" | (3) - #5 BOT. | #5 @ 18" O.C. | |

## FOOTING SCHEDULE

| TYPE | WIDTH | LENGTH | THICKNESS | REINFORCING | COMMENTS |
|---|---|---|---|---|---|
| F4.0-(3) | 4' - 0" | 4' - 0" | 1' - 0" | (6)-#4 BOT. E.W. | |
| F4.5-(3) | 4' - 6" | 4' - 6" | 1' - 0" | (8)-#5 BOT. E.W. | |
| F6.0-(3) | 6' - 0" | 6' - 0" | 1' - 0" | (6)-#5 T&B E.W. | |
| F6.5-(3) | 6' - 6" | 6' - 6" | 1' - 0" | (6)-#5 T&B E.W. | |
| F7.5-(3) | 7' - 6" | 7' - 6" | 1' - 0" | (8)-#5 T&B E.W. | |

## PIER SCHEDULE

| TYPE MARK | PIER DEPTH | PIER WIDTH | PIER LONGITUDINAL REINF. | PIER STIRRUP SIZE AND SPACING |
|---|---|---|---|---|
| P20X20 | 1' - 8" | 1' - 8" | (8)-#6 | #4@12" O.C. |

**FOUNDATION PLAN NOTES:**

1. SEE S000 SERIES FOR GENERAL NOTES
2. SEE S200 SERIES FOR COLUMN SCHEDULE
3. SEE S300 SERIES FOR LATERAL FRAME ELEVATIONS
4. SEE S400 SERIES FOR TYPICAL CONCRETE DETAILS
5. SEE S500 SERIES FOR TYPICAL STEEL DETAILS
6. F3.0-(3) (-2'-0") - INDICATES SPREAD FOOTING TYPE, SOIL BEARING CAPACITY (KSF), AND BOTTOM OF FOOTING ELEVATION. SEE SCHEDULE FOR SIZE AND REINFORCING. ALL FOOTINGS EXPOSED TO FREEZE THAW SHALL BEAR A MINIMUM OF 4'-0" BELOW GRADE REGARDLESS OF NOTED ELEVATION.
7. W2.0 (-2'-0") - INDICATES WALL STRIP FOOTING TYPE AND BOTTOM OF FOOTING ELEVATION. SEE SCHEDULE FOR SIZE AND REINFORCING. ALL FOOTINGS EXPOSED TO FREEZE THAW SHALL BEAR A MINIMUM OF 4'-0" BELOW GRADE REGARDLESS OF NOTED ELEVATION.
8. P20X20 - INDICATES CONCRETE PIER. SEE SCHEDULE FOR SIZE AND REINFORCING REQUIREMENTS.
9. ALL DIMENSIONS SHALL BE VERIFIED WITH THE ARCHITECTURAL DRAWINGS PRIOR TO FABRICATION AND CONSTRUCTION.

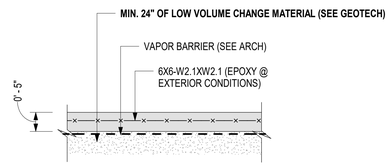


NOTES:
1. CUT CONTROL JOINTS SPACE NO FURTHER THAN 10'-0" O.C.

TYPICAL 5" SLAB-ON-GRADE (5" SOG)
SCALE: 3/4" = 1'-0"

Bergmeyer
LA - 800 South Figueroa St. Suite 1000, Los Angeles, CA 90017 212.337.1050
BOS - 51 Sleeper St. 6th Floor, Boston, MA 02210 617.542.1025
www.bergmeyer.com

CONSULTANTS:
H+O STRUCTURAL ENGINEERING
51 MELCHER ST, FLR 1
BOSTON, MA 02210
617-938-3349

SEAL/ SIGNATURE:
STATE OF MISSOURI
JEREMIAH C. O'NEILL
NUMBER
PE-2020009130
PROFESSIONAL ENGINEER

| NO. | BY | DATE | DESCRIPTION |
|---|---|---|---|

SHAKE SHACK

SHAKE SHACK - LEE'S SUMMIT MO

2051 NW LOWENSTEIN DRIVE
LEE'S SUMMIT, MISSOURI 64081
SHACK #1348

PERMIT/BID SET

FOUNDATION PLAN

| | |
|---|---|
| DRAWN BY: | ESP |
| CHECKED BY: | RFH |
| JOB NO: | 20-128 |

S100

1/11/2021 12:45:51 PM C:\Users\EricPicard\Hayes & O'Neill\20-128 Shake Shack Lees Summit - Documents\03 Structural\Drawings\Structural Revit\20-128 Shake Shack Lees Summit - Structural - R20191.rvt

RELEASE FOR CONSTRUCTION
AS NOTED ON PLANS REVIEW
DEVELOPMENT SERVICES
LEE'S SUMMIT, MISSOURI
03/10/2021

1 S300 CANOPY FRAMING PLAN
SCALE: 1/4" = 1'-0"

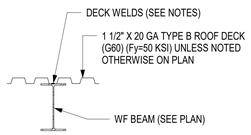


1. FASTEN DECK WITH 5/8" DIA. PUDDLE WELDS TO ALL SUPPORTS IN A 36/7 PATTERN. SCREW SIDELAPS WITH #10 SCREWS AT 12" O.C. MAX.

1 1/2" ROOF DECK (1 1/2")
SCALE: 3/4" = 1'-0"

**PLAN NOTES:**

1. SEE S000 SERIES FOR GENERAL NOTES
2. SEE S200 SERIES FOR COLUMN SCHEDULE
3. SEE S300 SERIES FOR LATERAL FRAME ELEVATIONS
4. SEE S400 SERIES FOR TYPICAL CONCRETE DETAILS
5. SEE S500 SERIES FOR TYPICAL STEEL DETAILS
6. ALL DIMENSIONS SHALL BE VERIFIED WITH THE ARCHITECTURAL DRAWINGS PRIOR TO FABRICATION AND CONSTRUCTION.
7. ONLY MAJOR FLOOR OPENINGS ARE SHOWN ON STRUCTURAL PLANS. REFER TO THE ARCHITECTUAL AND MECHANICAL DRAWINGS FOR ALL OTHER FLOOR OPENINGS. SEE THE TYPICAL FLOOR OPENING REINFORCING DETAILS FOR STRUCTURAL REQUIREMENTS. LOCATIONS SHOWN ON STRUCTURAL PLANS SHALL BE VERIFIED WITH ARCHITECTURAL DRAWINGS. SUBMIT COORDINATION DRAWINGS FOR ALL SLAB OPENINGS AND BOXOUTS FOR REVIEW.
8. DO NOT USE THE STRUCTURAL PLANS AS ERECTION DRAWINGS.
9. STEEL JOISTS, JOIST GIRDERS, AND BRIDGING SHALL BE DESIGNED, FABRICATED, AND INSTALLED IN ACCORDDANCE WITH THE STEEL JOIST INSTITUTE (SJI) SPECIFICATIONS. ALL JOISTS SUBJECT TO WIND UPLIFT SHALL HAVE UPLIFT BRIDGING IN ACCORDANCE WITH SJI. JOIST SUPPLIER SHALL SUBMIT CALCULATIONS FOR EACH JOIST TYPE AND INDICATE ALL JOIST MEMBER SIZES AND WELD SIZES.
10. BCX - INDICATES BOTTOM CHORD EXTENSION, SEE S502 FOR TYPICAL DETAILS.
11. AT HATCHED REGION OMIT PARAPET KICKERS FOR MEP CLEARANCE. GC COORDINATE FINAL MEP UNIT LOCATIONS WITH FINAL MEP DRAWINGS. LGMF SUPPLIER TO DESIGN BEAM ALONG TOP OF PARAPET WALL TO SPAN ACROSS THIS REGION.

Bergmeyer
LA - 800 South Figueroa St. Suite 1080 Los Angeles, CA 90017 212.337.1050
BOS - 51 Sleeper St. 6th Floor Boston, MA 02210 617.542.1025
www.bergmeyer.com

CONSULTANTS:
H+O STRUCTURAL ENGINEERING
51 MELCHER ST, FLR 1
BOSTON, MA 02210
617-938-3349

SEAL/ SIGNATURE:
STATE OF MISSOURI
JEREMIAH C. ONEILL
NUMBER
PE-2020009130
PROFESSIONAL ENGINEER

| NO. | BY | DATE | DESCRIPTION |
|---|---|---|---|

SHAKE SHACK

SHAKE SHACK - LEE'S SUMMIT MO

2051 NW LOWENSTEIN DRIVE
LEE'S SUMMIT, MISSOURI 64081
SHACK #1348

PERMIT/BID SET

CANOPY FRAMING PLAN

| | |
|---|---|
| DRAWN BY: | ESP |
| CHECKED BY: | RFH |
| JOB NO: | 20-128 |

S101

1/11/2021 12:46:51 PM C:\Users\EricPsandHayes & ONeill\20-128 Shake Shack Lees Summit - Documents\03 Structural Drawings\Structural Revit\20-128 Shake Shack Lees Summit - Structural - R2019.rvt

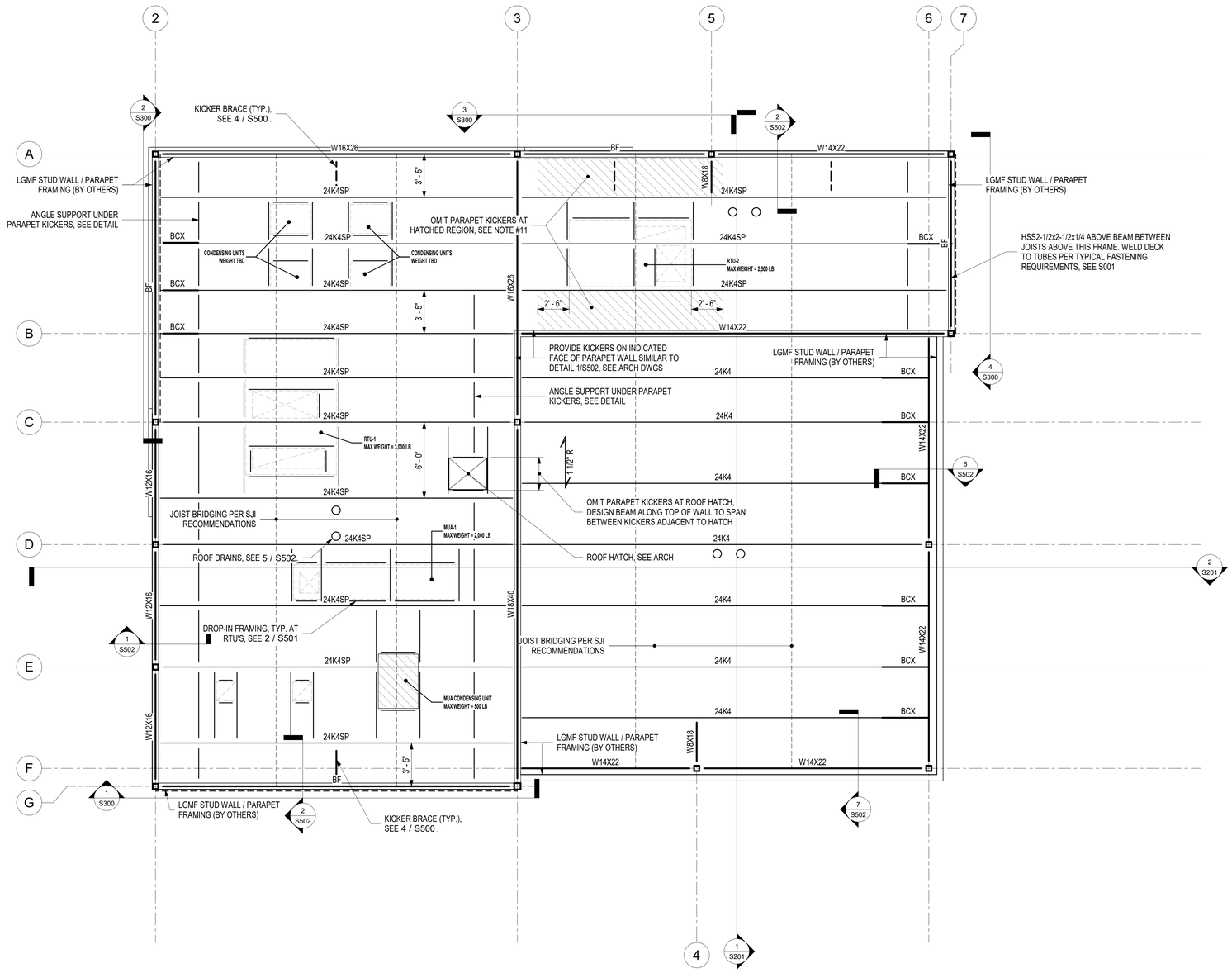


## 1 S201 ROOF FRAMING PLAN

SCALE: 1/4" = 1'-0"

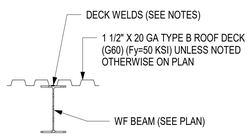


1. FASTEN DECK WITH 5/8" DIA. PUDDLE WELDS TO ALL SUPPORTS IN A 36/7 PATTERN. SCREW SIDELAPS WITH #10 SCREWS AT 12" O.C. MAX.

## 1 1/2" ROOF DECK (1 1/2")

SCALE: 3/4" = 1'-0"

**PLAN NOTES:**

1. SEE S000 SERIES FOR GENERAL NOTES
2. SEE S200 SERIES FOR COLUMN SCHEDULE
3. SEE S300 SERIES FOR LATERAL FRAME ELEVATIONS
4. SEE S400 SERIES FOR TYPICAL CONCRETE DETAILS
5. SEE S500 SERIES FOR TYPICAL STEEL DETAILS
6. ALL DIMENSIONS SHALL BE VERIFIED WITH THE ARCHITECTURAL DRAWINGS PRIOR TO FABRICATION AND CONSTRUCTION.
7. ONLY MAJOR FLOOR OPENINGS ARE SHOWN ON STRUCTURAL PLANS. REFER TO THE ARCHITECTUAL AND MECHANICAL DRAWINGS FOR ALL OTHER FLOOR OPENINGS. SEE THE TYPICAL FLOOR OPENING REINFORCING DETAILS FOR STRUCTURAL REQUIREMENTS. LOCATIONS SHOWN ON STRUCTURAL PLANS SHALL BE VERIFIED WITH ARCHITECTURAL DRAWINGS. SUBMIT COORDINATION DRAWINGS FOR ALL SLAB OPENINGS AND BOXOUTS FOR REVIEW.
8. DO NOT USE THE STRUCTURAL PLANS AS ERECTION DRAWINGS.
9. STEEL JOISTS, JOIST GIRDERS, AND BRIDGING SHALL BE DESIGNED, FABRICATED, AND INSTALLED IN ACCORDDANCE WITH THE STEEL JOIST INSTITUTE (SJI) SPECIFICATIONS. ALL JOISTS SUBJECT TO WIND UPLIFT SHALL HAVE UPLIFT BRIDGING IN ACCORDANCE WITH SJI. JOIST SUPPLIER SHALL SUBMIT CALCULATIONS FOR EACH JOIST TYPE AND INDICATE ALL JOIST MEMBER SIZES AND WELD SIZES.
10. BCX - INDICATES BOTTOM CHORD EXTENSION. SEE S502 FOR TYPICAL DETAILS.
11. AT HATCHED REGION OMIT PARAPET KICKERS FOR MEP CLEARANCE. GC COORDINATE FINAL MEP UNIT LOCATIONS WITH FINAL MEP DRAWINGS. LGMF SUPPLIER TO DESIGN BEAM ALONG TOP OF PARAPET WALL TO SPAN ACROSS THIS REGION.

RELEASE FOR CONSTRUCTION
AS NOTED ON PLANS REVIEW
DEVELOPMENT SERVICES
LEE'S SUMMIT, MISSOURI
03/10/2021


Bergmeyer
www.bergmeyer.com
LA - 800 South Figueroa St. Suite 1080 Los Angeles, CA 90017 212.337.1090
BOS - 51 Sleeper St. 6th Floor Boston, MA 02210 617.542.1025

CONSULTANTS:
T+O STRUCTURAL ENGINEERING
51 MELCHER ST, FLR 1
BOSTON, MA 02210
617-938-3349


SEAL/ SIGNATURE:

STATE OF MISSOURI
JEREMIAH C. O'NEILL
NUMBER PE-2020009130
PROFESSIONAL ENGINEER

| NO. | BY | DATE | DESCRIPTION |
|---|---|---|---|

SHAKE SHACK

SHAKE SHACK - LEE'S SUMMIT MO

2051 NW LOWENSTEIN DRIVE
LEE'S SUMMIT, MISSOURI 64081
SHACK #1348

PERMIT/BID SET

ROOF FRAMING PLAN

| | |
|---|---|
| DRAWN BY: | ESP |
| CHECKED BY: | RFH |
| JOB NO: | 20-128 |

S102


1/11/2021 12:46:32 PM C:\Users\ESrey\Desktop\Hayes & O'Neill\20-128 Shake Shack Lees Summit - Documents\03 Structural Drawings\Structural Revit\20-128 Shake Shack Lee's Summit - Structural - R2019.rvt

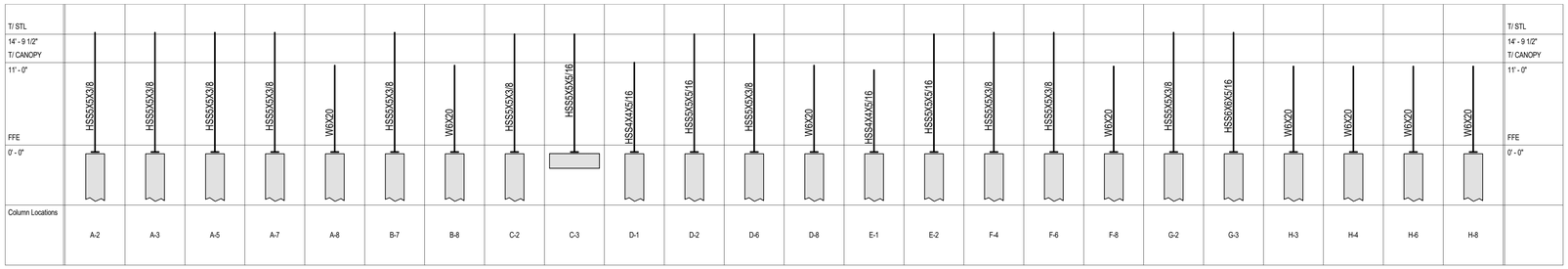


## COLUMN SCHEDULE

SCALE: 1/8" = 1'-0"

### TYPICAL BASEPLATE...

| COLUMN SIZE | BASEPLATE SIZE (LxWxT) |
|---|---|
| HSS4X4X5/16 | 12"x12"x3/4" |
| HSS5X5X3/8 | 13"x13"x3/4" |
| HSS5X5X5/16 | 13"x13"x3/4" |
| HSS6X6X5/16 | 14"x14"x3/4" |
| W6X20 | 14"x14"x3/4" |

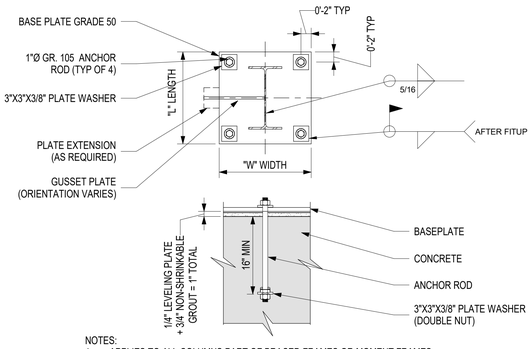


NOTES:
1. APPLIES TO ALL COLUMNS PART OF BRACED FRAMES OR MOMENT FRAMES
2. REFER TO COLUMN SCHEDULE FOR BASE PLATE SIZE AND THICKNESS

## 2 TYPICAL LATERAL COLUMN BASEPLATE DETAIL

SCALE: 1" = 1'-0"

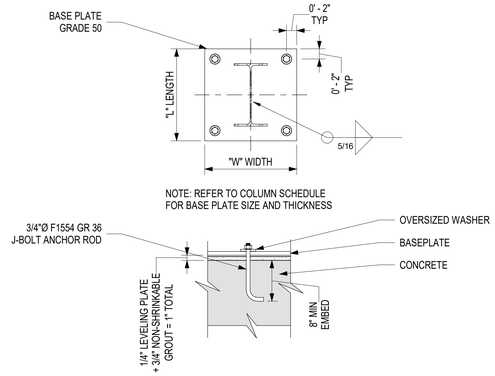


NOTE: REFER TO COLUMN SCHEDULE FOR BASE PLATE SIZE AND THICKNESS

## 1 TYPICAL GRAVITY COLUMN BASEPLATE DETAIL

SCALE: 1" = 1'-0"

### COLUMN SCHEDULE SYMBOLS

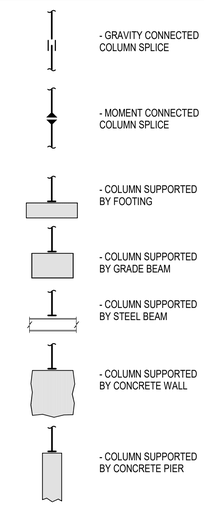


NOTE: SYMBOLS ARE SHOWN DIAGRAMATICALLY. REFER TO PLANS FOR ACTUAL SUPPORT CONDITIONS AND SIZES.

**COLUMN SCHEDULE NOTES:**

1. SEE S000 SERIES FOR GENERAL NOTES
2. SEE S200 SERIES FOR COLUMN SCHEDULE
3. SEE S300 SERIES FOR LATERAL FRAME ELEVATIONS
4. SEE S400 SERIES FOR TYPICAL CONCRETE DETAILS
5. SEE S500 SERIES FOR TYPICAL STEEL DETAILS
6. ALL DIMENSIONS SHALL BE VERIFIED WITH THE ARCHITECTURAL DRAWINGS PRIOR TO FABRICATION AND CONSTRUCTION.
7. SEE TYPICAL STEEL DETAILS FOR COLUMN SPLICE REQUIREMENTS. COLUMNS PART OF THE LATERAL SYSTEM SHALL BE SPLICED IN ACCORDANCE WITH THE LATERAL COLUMNS SPLICE DETAILS.
8. FOR COLUMN SIZES NOT SHOWN REFER TO THE LATERAL FRAME ELEVATIONS OR PLANS.
9. SEE TYPICAL STEEL DETAILS FOR BASE PLATE INFORMATION.
10. BASE PLATES SIZES ARE NOTED AS 'LENGTH' x 'WIDTH' x 'THICKNESS', WHERE THE LENGTH IS PARALLEL TO THE COLUMN WEB.
11. UNLESS COLUMN BASE PLATE SIZE IS SPECIFICALLY TAGGED ON THE COLUMN SCHEDULE, THE TYPICAL SCHEDULED BASE PLATE SIZES SHALL APPLY.

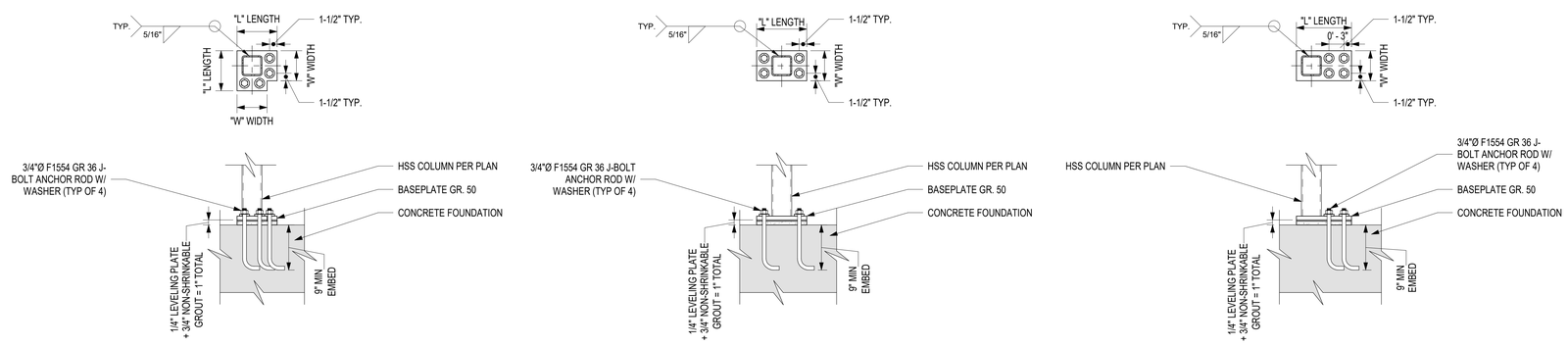


## 3 TYPICAL HSS GRAVITY COLUMN BASEPLATE DETAIL

SCALE: 1" = 1'-0"

RELEASE FOR CONSTRUCTION
AS NOTED ON PLANS REVIEW
DEVELOPMENT SERVICES
LEE'S SUMMIT, MISSOURI
03/10/2021


Bergmeyer
BOS - 51 Sleeper St. Boston, MA 02210 617.542.1025
LA - 800 South Figueroa St. Suite 1100 Los Angeles, CA 90017 212.337.1090
www.bergmeyer.com

CONSULTANTS:
H+O STRUCTURAL ENGINEERING
51 MELCHER ST, FLR 1
BOSTON, MA 02210
617-938-3349


SEAL/ SIGNATURE:

STATE OF MISSOURI — JEREMIAH C. O'NEILL — NUMBER PE-2020009130 — PROFESSIONAL ENGINEER

| NO. | BY | DATE | DESCRIPTION |
|---|---|---|---|

SHAKE SHACK

SHAKE SHACK - LEE'S SUMMIT MO

2051 NW LOWENSTEIN DRIVE
LEE'S SUMMIT, MISSOURI 64081
SHACK #1348

PERMIT/BID SET

COLUMN SCHEDULE

| | |
|---|---|
| DRAWN BY: | ESP |
| CHECKED BY: | RFH |
| JOB NO: | 20-128 |

S200


1/11/2021 12:46:54 PM C:\Users\EricPicard\Hayes & O'Neill\20-128 Shake Shack Lees Summit - Documents\03 Structural Drawings\Structural Revit\20-128 Shake Shack Lee's Summit - Structural - R20191.rvt

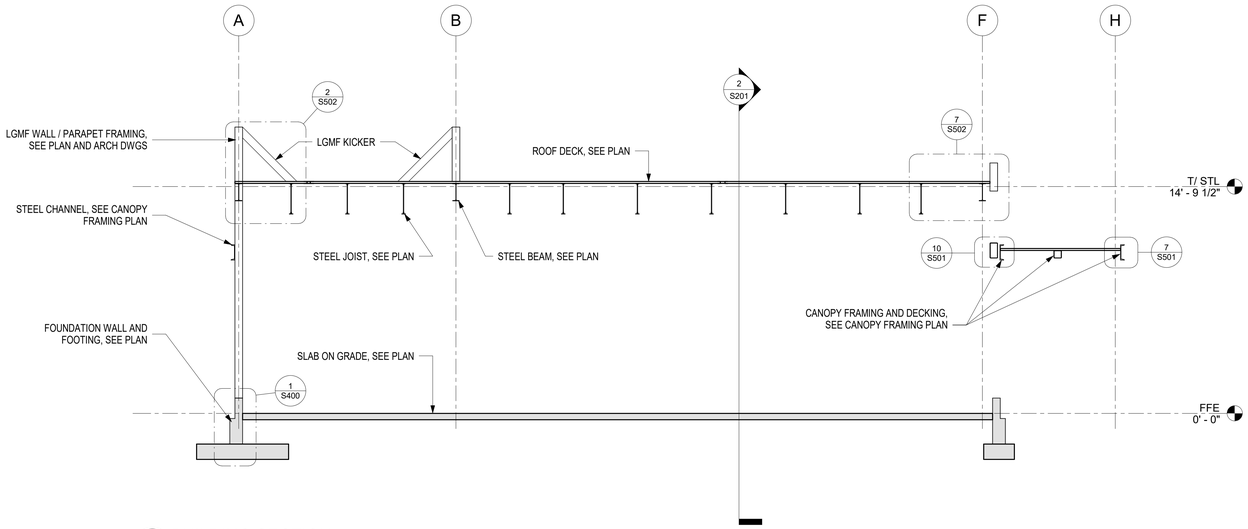


1 S100 BUILDING SECTION
SCALE: 1/4" = 1'-0"

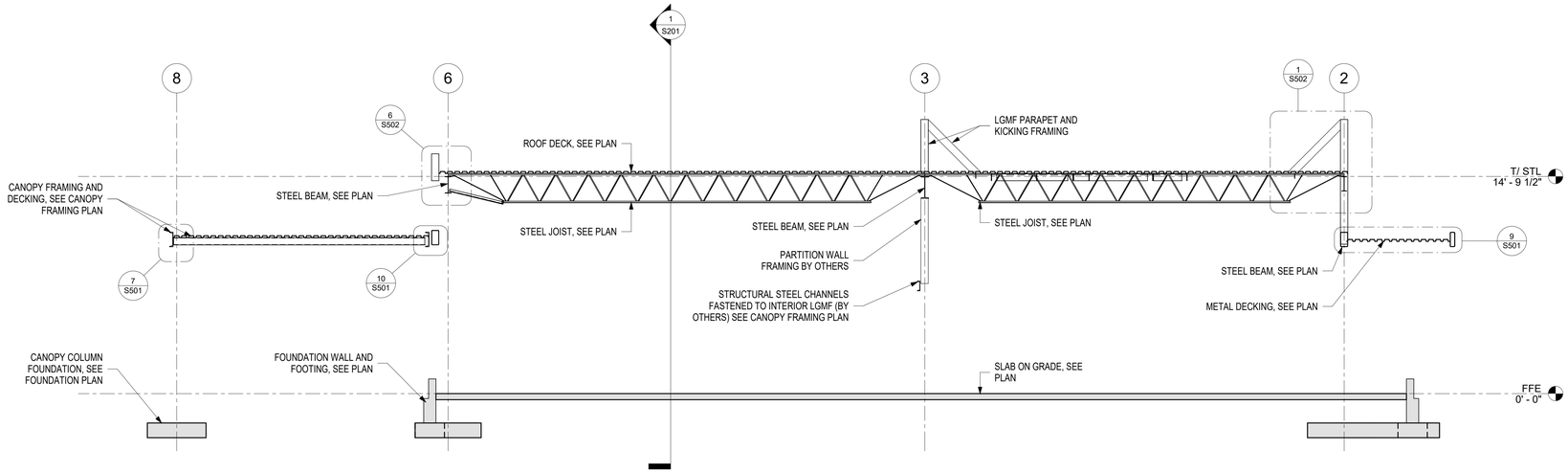


2 S100 BUILDING SECTION
SCALE: 1/4" = 1'-0"

RELEASE FOR CONSTRUCTION
AS NOTED ON PLANS REVIEW
DEVELOPMENT SERVICES
LEE'S SUMMIT, MISSOURI
03/10/2021


Bergmeyer
BOS - 51 Sleeper St. 6th Floor Boston, MA 02210 617.542.1025
LA - 800 South Figueroa St. Suite 1000 Los Angeles, CA 90017 212.337.1050
www.bergmeyer.com

CONSULTANTS:
T+O STRUCTURAL ENGINEERING
51 MELCHER ST, FLR 1
BOSTON, MA 02210
617-938-3349


SEAL/ SIGNATURE:

STATE OF MISSOURI
JEREMIAH C. O'NEILL
NUMBER
PE-2020009130
PROFESSIONAL ENGINEER

| NO. | BY | DATE | DESCRIPTION |
|---|---|---|---|

SHAKE SHACK

SHAKE SHACK - LEE'S SUMMIT MO

2051 NW LOWENSTEIN DRIVE
LEE'S SUMMIT, MISSOURI 64081
SHACK #1348

PERMIT/BID SET

BUILDING SECTIONS

| | |
|---|---|
| DRAWN BY: | Author |
| CHECKED BY: | Checker |
| JOB NO: | 20-128 |

S201


1/11/2021 12:46:55 PM C:\Users\EricPowell\Hayes & O'Neill\20-128 Shake Shack Lees Summit - Documents\03 Structural Drawings\Structural Revit\20-128 Shake Shack Lee's Summit - Structural - R2019.rvt

RELEASE FOR CONSTRUCTION
AS NOTED ON PLANS REVIEW
DEVELOPMENT SERVICES
LEE'S SUMMIT, MISSOURI
03/10/2021

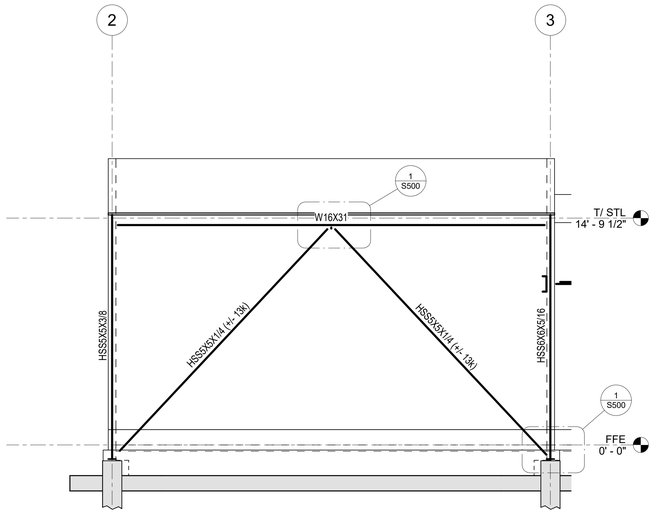


1 S100 FRAME @ GRID LINE G
SCALE: 1/4" = 1'-0"

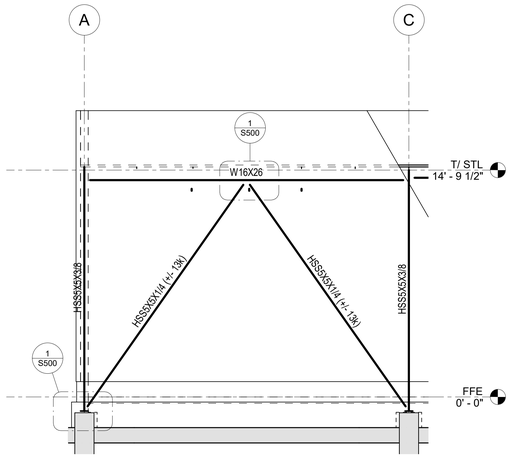


2 S100 FRAME @ GRID LINE 2
SCALE: 1/4" = 1'-0"

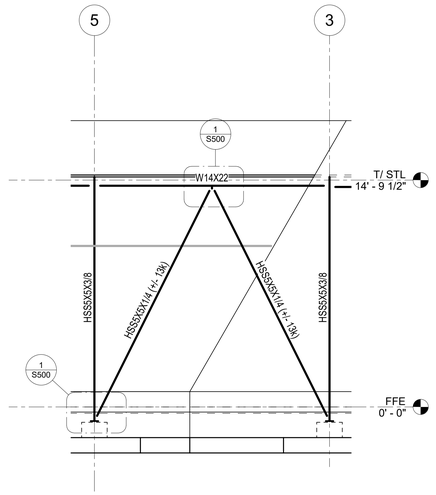


3 S100 FRAME @ GRID LINE A
SCALE: 1/4" = 1'-0"

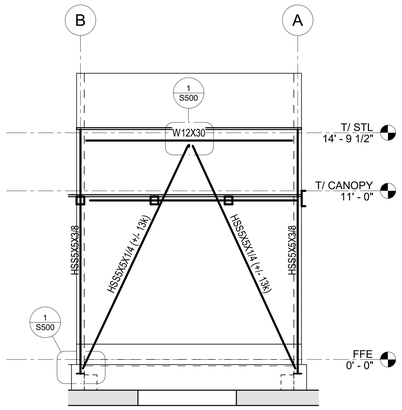


4 S100 FRAME @ GRID LINE 7
SCALE: 1/4" = 1'-0"

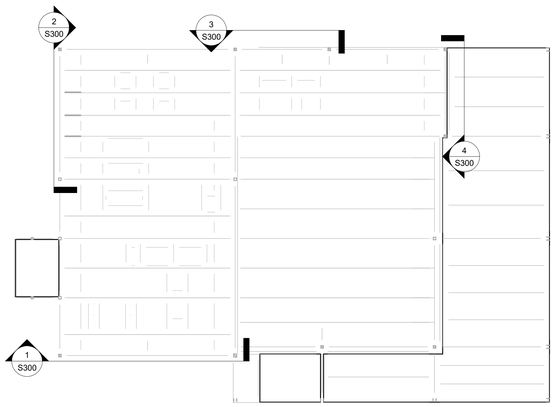


KEY PLAN
SCALE: 1" = 10'-0"

**LATERAL FRAME NOTES:**

1. SEE S000 SERIES FOR GENERAL NOTES
2. SEE S200 SERIES FOR COLUMN SCHEDULE
3. SEE S300 SERIES FOR LATERAL FRAME ELEVATIONS
4. SEE S400 SERIES FOR TYPICAL CONCRETE DETAILS
5. SEE S500 SERIES FOR TYPICAL STEEL DETAILS
6. ALL DIMENSIONS SHALL BE VERIFIED WITH THE ARCHITECTURAL DRAWINGS PRIOR TO FABRICATION AND CONSTRUCTION.
7. SEE TYPICAL STEEL DETAILS FOR COLUMN SPLICE REQUIREMENTS. COLUMNS PART OF THE LATERAL SYSTEM SHALL BE SPLICED IN ACCORDANCE WITH THE LATERAL COLUMNS SPLICE DETAILS.
8. REFER TO COLUMN SCHEDULE OR PLANS FOR MEMBER SIZES NOT SHOWN.
9. SEE TYPICAL STEEL DETAILS AND COLUMN SCHEDULE FOR BASE PLATE INFORMATION.

Bergmeyer
BOS
51 Sleeper St.
6th Floor
Boston, MA 02210
617.542.1025
LA
800 South Figueroa St.
Suite 1080
Los Angeles, CA 90017
212.337.1090
www.bergmeyer.com

CONSULTANTS:
H+O
STRUCTURAL ENGINEERING
51 MELCHER ST, FLR 1
BOSTON, MA 02210
617-938-3349

SEAL/ SIGNATURE:

STATE OF MISSOURI
JEREMIAH C. O'NEILL
NUMBER
PE-2020009130
PROFESSIONAL ENGINEER

| NO. | BY | DATE | DESCRIPTION |
|---|---|---|---|

SHAKE SHACK

SHAKE SHACK - LEE'S SUMMIT MO

2051 NW LOWENSTEIN DRIVE
LEE'S SUMMIT, MISSOURI 64081
SHACK #1348

PERMIT/BID SET

LATERAL FRAME ELEVATIONS

| | |
|---|---|
| DRAWN BY: | ESP |
| CHECKED BY: | RFH |
| JOB NO: | 20-128 |

S300

1/11/2021 12:46:56 PM C:\Users\EricPicard\Hayes & O'Neill\20-128 Shake Shack Lees Summit - Documents\03 Structural Drawings\Structural Revit\20-128 Shake Shack Lee's Summit - Structural - R2019.rvt

RELEASE FOR CONSTRUCTION
AS NOTED ON PLANS REVIEW
DEVELOPMENT SERVICES
LEE'S SUMMIT, MISSOURI
03/10/2021

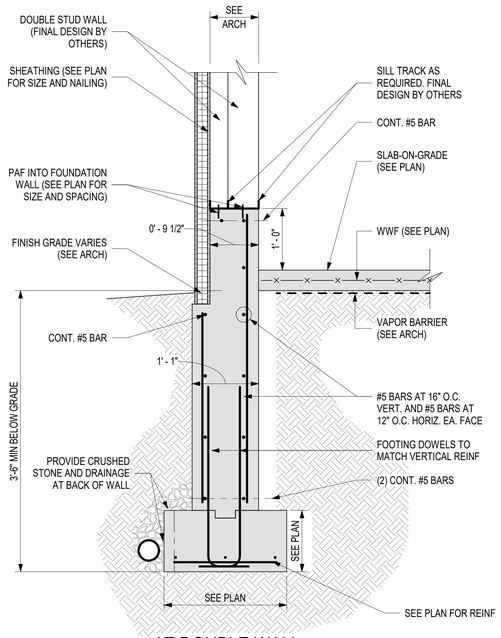


AT DOUBLE WALL

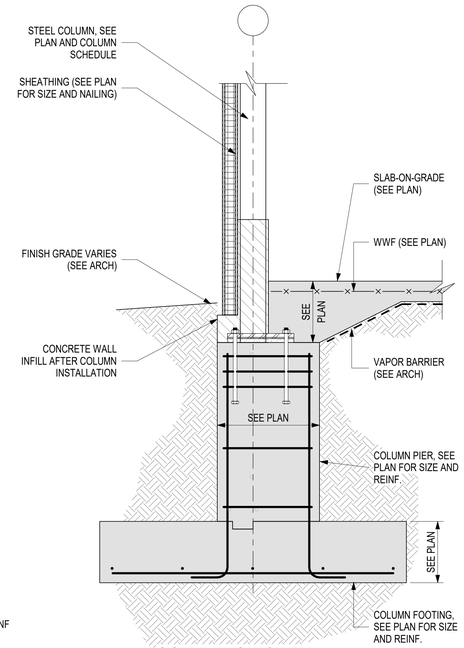


COLUMN ON STEM

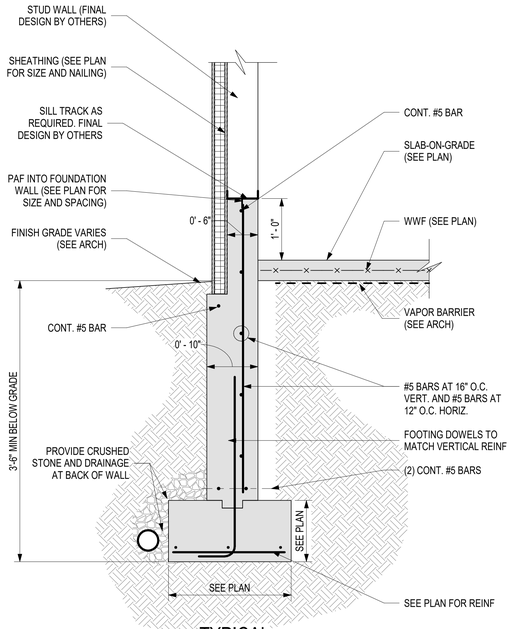


TYPICAL

## 1 / S100 FROST WALL SECTIONS

SCALE: 1" = 1'-0"

REBAR DEVELOPMENT TABLE

1. FOR USE WITH GRADE 60 DEFORMED REBARS
2. TOP BARS ARE BARS WITH MORE THAN 12" OF CONCRETE CAST BELOW THE BARS (PER ACI)
3. FOR GR 75 KSI REBAR, SPLICES IN TABLE BELOW SHALL BE INCREASE BY 25%.

**f'c=4000 PSI - NWC**

**NWC**=NORMAL WEIGHT CONCRETE
**C**=BAR CLEAR COVER (in)
**E**=EPOXY COATED REBAR
**LWC**=LIGHTWEIGHT CONCRETE
**S**=CLEAR BAR SPACING (in)
**U**=UNCOATED REBAR

| REBAR SIZE | CLASS A SPLICE = TENSION DEVELOPMENT LENGTH | C ≥ 0.75 in | | | | C ≥ 1.0 in | | | | C ≥ 1.25 in | | | | C ≥ 1.50 in | | | | C ≥ 2.00 in | | | | C ≥ 3.00 in | | | |
|---|---|---|---|---|---|---|---|---|---|---|---|---|---|---|---|---|---|---|---|---|---|---|---|---|---|
| | | S ≥ 1.50 in | | | | S ≥ 2.0 in | | | | S ≥ 2.50 in | | | | S ≥ 3.0 in | | | | S ≥ 4.0 in | | | | S ≥ 6.0 in | | | |
| | CLASS B SPLICE = LAP SPLICE LENGTH | U | | E | | U | | E | | U | | E | | U | | E | | U | | E | | U | | E | |
| | | TOP | OTHER | TOP | OTHER | TOP | OTHER | TOP | OTHER | TOP | OTHER | TOP | OTHER | TOP | OTHER | TOP | OTHER | TOP | OTHER | TOP | OTHER | TOP | OTHER | TOP | OTHER |
| #3 | A | 12 | 12 | 15 | 13 | 12 | 12 | 15 | 13 | 12 | 12 | 14 | 12 | 12 | 12 | 14 | 12 | 12 | 12 | 14 | 12 | 12 | 12 | 14 | 12 |
| | B | 15 | 12 | 19 | 17 | 15 | 12 | 19 | 17 | 15 | 12 | 18 | 14 | 15 | 12 | 18 | 14 | 15 | 12 | 18 | 14 | 15 | 12 | 18 | 14 |
| #4 | A | 19 | 15 | 25 | 22 | 15 | 12 | 20 | 18 | 15 | 12 | 20 | 18 | 15 | 12 | 18 | 14 | 15 | 12 | 18 | 14 | 15 | 12 | 18 | 14 |
| | B | 25 | 19 | 32 | 28 | 20 | 15 | 26 | 23 | 20 | 15 | 26 | 23 | 20 | 15 | 24 | 18 | 20 | 15 | 24 | 18 | 20 | 15 | 24 | 18 |
| #5 | A | 28 | 21 | 36 | 32 | 23 | 17 | 29 | 26 | 19 | 15 | 25 | 22 | 19 | 15 | 25 | 22 | 19 | 15 | 23 | 18 | 19 | 15 | 23 | 18 |
| | B | 36 | 28 | 47 | 41 | 29 | 23 | 38 | 34 | 25 | 19 | 32 | 28 | 25 | 19 | 32 | 28 | 25 | 19 | 29 | 23 | 25 | 19 | 29 | 23 |
| #6 | A | 37 | 29 | 49 | 43 | 31 | 24 | 40 | 35 | 26 | 20 | 34 | 30 | 23 | 18 | 30 | 26 | 23 | 18 | 30 | 26 | 23 | 18 | 27 | 21 |
| | B | 49 | 37 | 63 | 56 | 40 | 31 | 52 | 46 | 34 | 26 | 44 | 39 | 29 | 23 | 38 | 34 | 29 | 23 | 38 | 34 | 29 | 23 | 35 | 27 |
| #7 | A | 60 | 46 | 78 | 69 | 50 | 38 | 65 | 57 | 42 | 33 | 55 | 49 | 37 | 29 | 48 | 43 | 33 | 25 | 43 | 38 | 33 | 25 | 39 | 30 |
| | B | 78 | 60 | 102 | 90 | 65 | 50 | 84 | 74 | 55 | 42 | 72 | 63 | 48 | 37 | 63 | 55 | 43 | 33 | 56 | 49 | 43 | 33 | 51 | 39 |
| #8 | A | 74 | 57 | 97 | 86 | 62 | 48 | 81 | 72 | 53 | 41 | 70 | 61 | 47 | 36 | 61 | 54 | 37 | 29 | 49 | 43 | 37 | 29 | 45 | 35 |
| | B | 97 | 74 | 126 | 111 | 81 | 62 | 105 | 93 | 69 | 53 | 90 | 80 | 61 | 47 | 79 | 70 | 49 | 37 | 63 | 56 | 49 | 37 | 58 | 45 |
| #9 | A | 90 | 69 | 118 | 104 | 76 | 58 | 99 | 87 | 65 | 50 | 85 | 75 | 58 | 44 | 75 | 66 | 46 | 36 | 61 | 53 | 42 | 33 | 55 | 49 |
| | B | 117 | 90 | 153 | 135 | 98 | 76 | 128 | 113 | 85 | 65 | 111 | 98 | 75 | 58 | 97 | 86 | 60 | 46 | 79 | 69 | 55 | 42 | 71 | 63 |
| #10 | A | 108 | 83 | 141 | 125 | 92 | 71 | 120 | 106 | 80 | 61 | 104 | 92 | 70 | 54 | 92 | 81 | 57 | 44 | 75 | 66 | 47 | 37 | 62 | 55 |
| | B | 141 | 108 | 184 | 162 | 119 | 92 | 156 | 137 | 103 | 80 | 135 | 119 | 91 | 70 | 119 | 105 | 74 | 57 | 97 | 85 | 62 | 47 | 80 | 71 |
| #11 | A | 127 | 98 | 166 | 146 | 108 | 83 | 142 | 125 | 95 | 73 | 124 | 109 | 84 | 65 | 110 | 97 | 68 | 53 | 89 | 79 | 53 | 41 | 69 | 61 |
| | B | 165 | 127 | 215 | 190 | 141 | 108 | 184 | 162 | 123 | 95 | 160 | 142 | 109 | 84 | 142 | 126 | 89 | 68 | 116 | 102 | 68 | 53 | 89 | 79 |

## 5 SPLICE TABLE 4000PSI NWC1

SCALE: 1/8" = 1'-0"

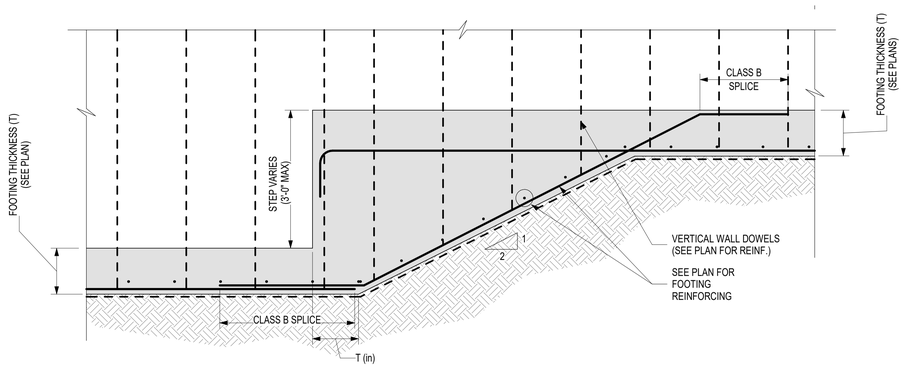


## 4 TYPICAL STEPPED FOOTING DETAIL

SCALE: 3/4" = 1'-0"

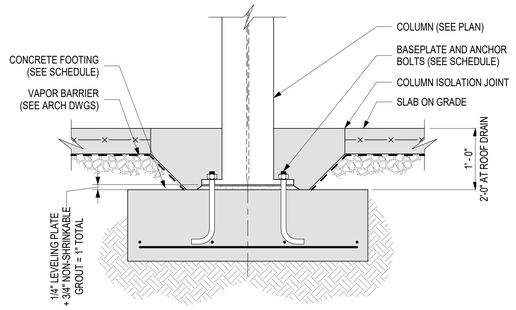


## 3 / S100 TYPICAL INTERIOR COLUMN FOOTING DETAIL

SCALE: 1" = 1'-0"

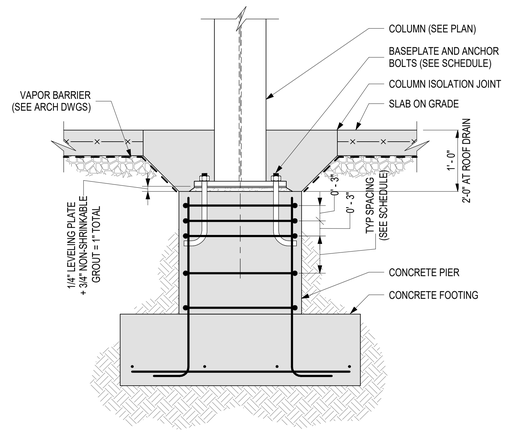


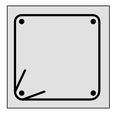

4-BAR CONFIGURATION

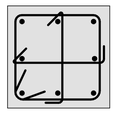

8-BAR CONFIGURATION

NOTES:
1. SEE PIER AND FOOTING SCHEDULE FOR GEOMETRY AND REINFORCING SIZE/SPACING.
2. AT EXTERIOR CONDITIONS OR WHERE THE FOOTING IS EXPOSED TO FREEZE THAW, THE BOTTOM OF FOOTING SHALL EXTEND A MINIMUMN OF 4'-0" BELOW FINISHED GRADE.
3. REFER TO GEOTECH REPORT FOR SUBGRACE PREPARATION AND OVEREXCAVATE AND REPLACE REQUIREMENTS.

## 2 TYPICAL COLUMN PIER AND FOOTING DETAIL

SCALE: 1" = 1'-0"

Bergmeyer
LA - 800 South Figueroa St. Suite 1100 Los Angeles, CA 90017 212.337.1090
BOS - 51 Sleeper St. 6th Floor Boston, MA 02210 617.542.1025
www.bergmeyer.com

CONSULTANTS:
H+O STRUCTURAL ENGINEERING
51 MELCHER ST, FLR 1
BOSTON, MA 02210
617-938-3349

SEAL/ SIGNATURE:

STATE OF MISSOURI
JEREMIAH C. O'NEILL
NUMBER
PE-2020009130
PROFESSIONAL ENGINEER

| NO. | BY | DATE | DESCRIPTION |
|---|---|---|---|

SHAKE SHACK

SHAKE SHACK - LEE'S SUMMIT MO

2051 NW LOWENSTEIN DRIVE
LEE'S SUMMIT, MISSOURI 64081
SHACK #1348

PERMIT/BID SET

CONCRETE DETAILS I

| | |
|---|---|
| DRAWN BY: | ESP |
| CHECKED BY: | RFH |
| JOB NO: | 20-128 |

S400

1/11/2021 12:46:58 PM C:\Users\ESrc\Pound\Hayes & O'Neill\20-128 Shake Shack Lees Summit - Documents\03 Structural Drawing\Structural Revit\20-128 Shake Shack Lee's Summit - Structural - R2019.rvt

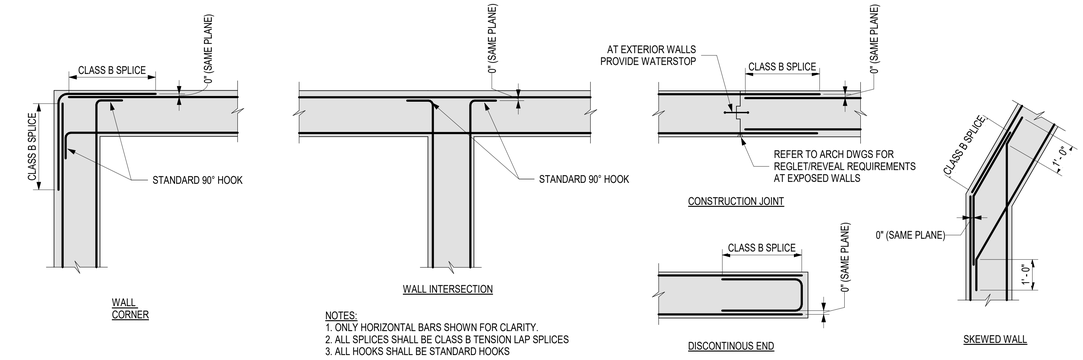


NOTES:
1. ONLY HORIZONTAL BARS SHOWN FOR CLARITY.
2. ALL SPLICES SHALL BE CLASS B TENSION LAP SPLICES
3. ALL HOOKS SHALL BE STANDARD HOOKS

## 1 TYPICAL HORIZ. REINFORCING DETAILS
SCALE: 1/2" = 1'-0"

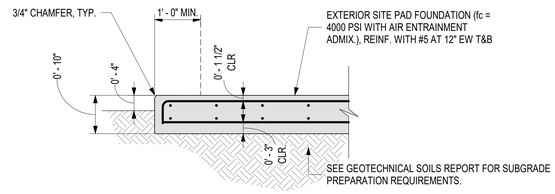


## 2 CONCRETE EQUIP. PADS
SCALE: 3/4" = 1'-0"

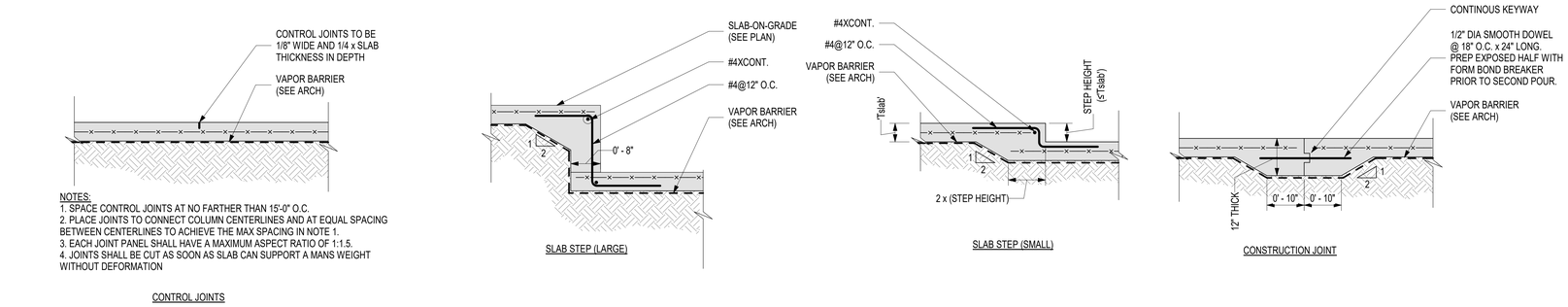


NOTES:
1. SPACE CONTROL JOINTS AT NO FARTHER THAN 15'-0" O.C.
2. PLACE JOINTS TO CONNECT COLUMN CENTERLINES AND AT EQUAL SPACING BETWEEN CENTERLINES TO ACHIEVE THE MAX SPACING IN NOTE 1.
3. EACH JOINT PANEL SHALL HAVE A MAXIMUM ASPECT RATIO OF 1:1.5.
4. JOINTS SHALL BE CUT AS SOON AS SLAB CAN SUPPORT A MANS WEIGHT WITHOUT DEFORMATION

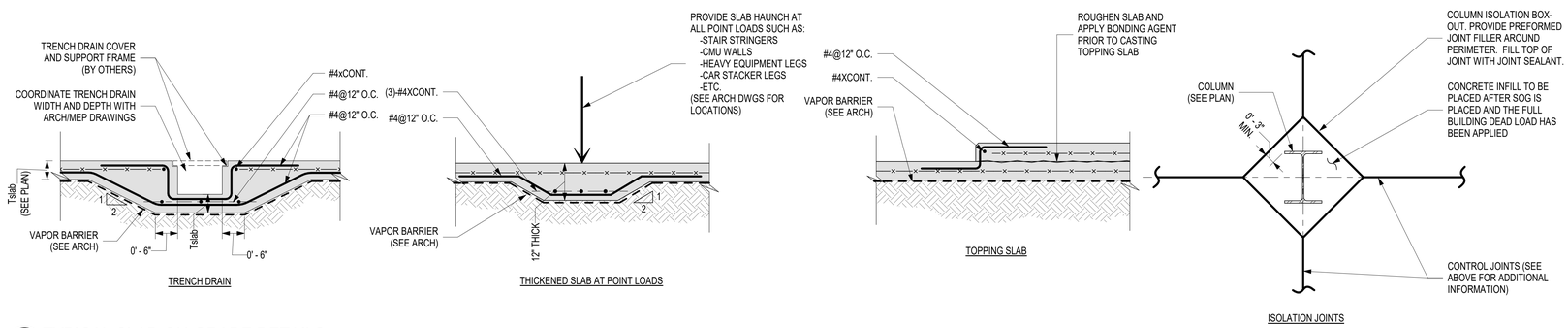


## 3 TYPICAL SLAB-ON-GRADE DETAILS
SCALE: 3/4" = 1'-0"

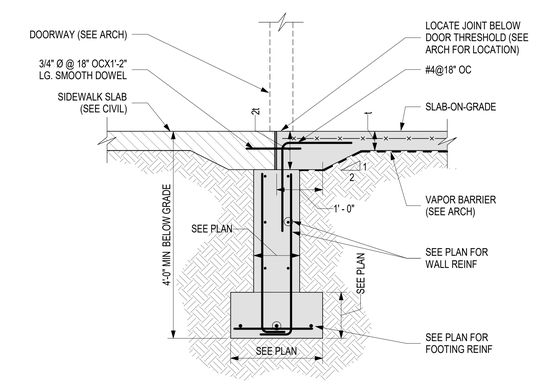


## 4 TYPICAL FROST WALL DETAIL AT DOORWAY
S100 SCALE: 3/4" = 1'-0"

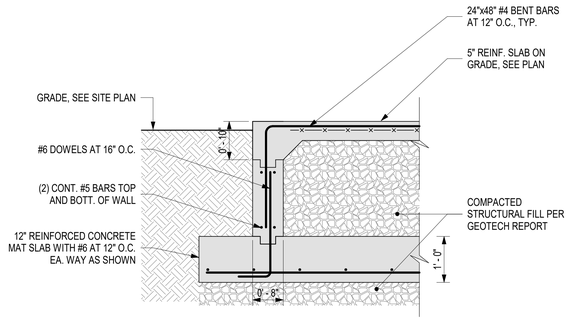


## 5 TRASH ENCLOSURE DETAIL
SCALE: 3/4" = 1'-0"

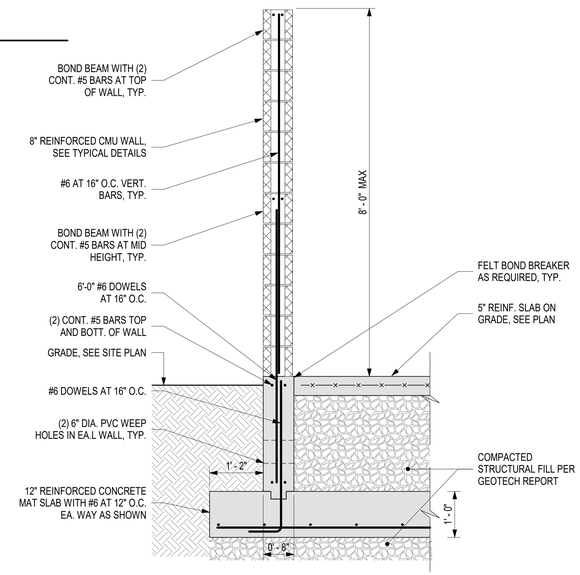


## 6 TRASH ENCLOSURE DETAIL
SCALE: 3/4" = 1'-0"

RELEASE FOR CONSTRUCTION
AS NOTED ON PLANS REVIEW
DEVELOPMENT SERVICES
LEE'S SUMMIT, MISSOURI
03/10/2021


Bergmeyer
www.bergmeyer.com
LA - 800 South Figueroa St. Suite 1000 Los Angeles, CA 90017 212.337.1090
BOS - 51 Sleeper St. 6th Floor Boston, MA 02210 617.542.1025

CONSULTANTS:
T+O STRUCTURAL ENGINEERING
51 MELCHER ST, FLR 1
BOSTON, MA 02210
617-938-3349


SEAL/ SIGNATURE:

STATE OF MISSOURI
JEREMIAH C. ONEILL
NUMBER
PE-2020009130
PROFESSIONAL ENGINEER

| NO. | BY | DATE | DESCRIPTION |
|---|---|---|---|

SHAKE SHACK

SHAKE SHACK - LEE'S SUMMIT MO

2051 NW LOWENSTEIN DRIVE
LEE'S SUMMIT, MISSOURI 64081
SHACK #1348

PERMIT/BID SET

CONCRETE DETAILS II

| | |
|---|---|
| DRAWN BY: | ESP |
| CHECKED BY: | RFH |
| JOB NO: | 20-128 |

S401


1/11/2021 12:46:59 PM C:\Users\EricPoarch\Hayes & O'Neill\20-128 Shake Shack Lees Summit - Documents\03 Structural Drawings\Structural Revit\20-128 Shake Shack Lee's Summit - Structural - R20.rvt

RELEASE FOR CONSTRUCTION
AS NOTED ON PLANS REVIEW
DEVELOPMENT SERVICES
LEE'S SUMMIT, MISSOURI
03/10/2021

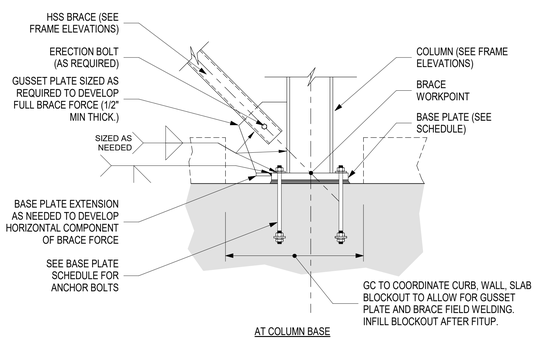


AT COLUMN BASE

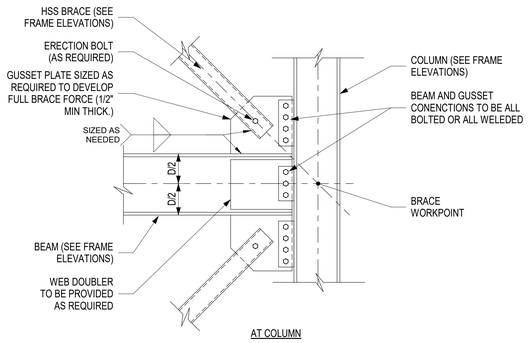


AT COLUMN

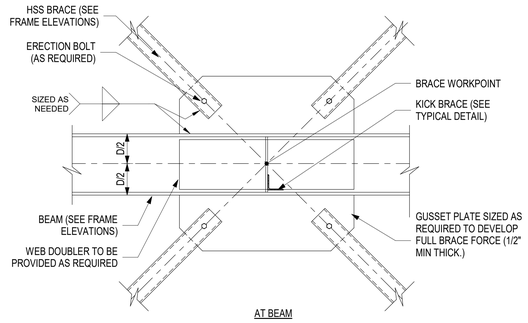


AT BEAM

## 1 S300 TYPICAL HSS BRACE CONNECTIONS

SCALE: 3/4" = 1'-0"

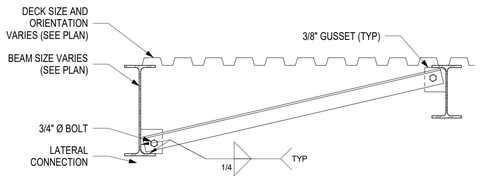


NO SLAB CONDITION - WITH PARALLEL BEAM

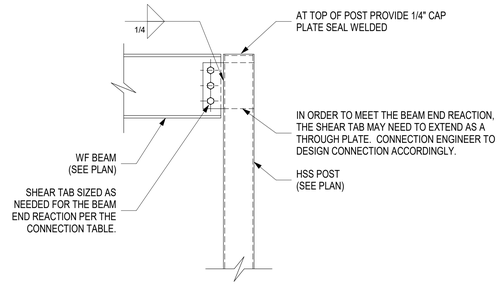


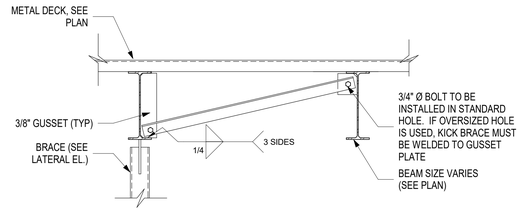


NOTES:
1. KICKER ANGLE SIZING AS FOLLOWS:
   -WHERE KICKER LENGTH <= 6 FT USE L3X3X3/8
   -WHERE KICKER LENGTH <= 12 FT USE L5X5X3/8
2. AT LOCATIONS WHERE THERE IS AN INFRAMING PERPENDICULAR BEAM WITHIN 12" OF THE GUSSET PLATE CENTERLINE, THE KICKER MAY BE OMITTED. THE IN-FRAMING BEAM SHALL UTILIZE A FULL DEPTH STIFFENER CONNECTION TO BRACE THE BOTTOM BEAM FLANGE.

## 3 TYPICAL CONNECTION TO HSS POST

SCALE: 1" = 1'-0"

## 2 TYPICAL BRACED FRAME KICK-BRACE DETAIL

SCALE: 3/4" = 1'-0"

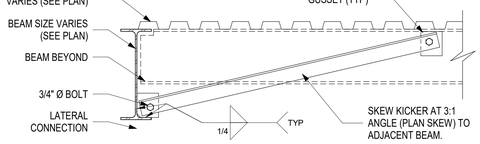


NO SLAB CONDITION - WITH PERPENDICULAR BEAM

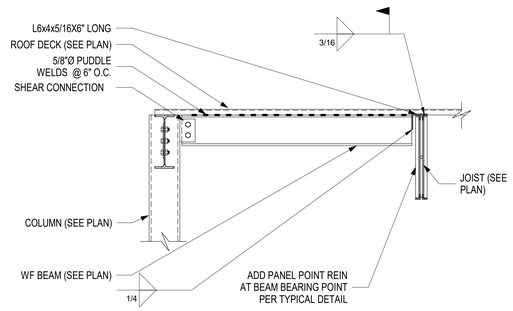


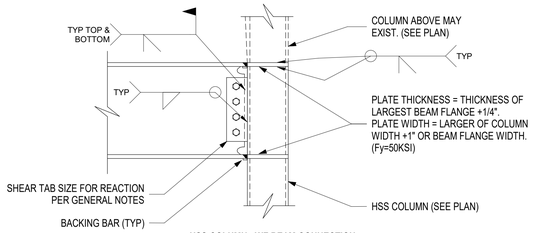


**HSS COLUMN - WF BEAM CONNECTION**

NOTES:
1. MOMENT CONNECTIONS SHALL BE DESIGNED BY THE FABRICATORS ENGINEER FOR A MOMENT OF 1.1*Ry*My (LRFD) OF THE BEAM.
2. ALL BOLTS USED IN MOMENT CONNECTIONS SHALL BE DESIGNED AS SLIP-CRITICAL.
3. ALL SHEAR CONNECTIONS SHALL BE DESIGNED BY THE FABRICATORS ENGINEER FOR THE POSTED SHEAR REACTION.
4. STIFFENER PLATE WELDS MUST BE SIZED TO DELIVER THE FULL FLANGE FORCE TO THE COLUMN SECTION.
5. IN GENERAL STIFFENER PLATE THICKNESS SHALL MATCH THE INFRAMING BEAM FLANGE THICKNESS. IN BEAM TO COLUMN WEB TYPE CONNECTIONS, THE STIFFENER PLATES SHALL BE INCREASED IN THICKNESS BY 1/4" TO ACCOMODATE FABRICATION AND ROLLING TOLERANCES AND FIELD FIT-UP. ALIGN THE CENTERLINE OF STIFFENER WITH THE BEAM FLANGE CENTERLINE.
6. AT BEAM-COLUMN WEB CONNECTIONS, THE HORIZONTAL WELDS BETWEEN THE EXTENDED SHEAR PLATE AND THE COLUMN STIFFENERS SHALL BE DESIGNED FOR THE SHEAR STRESS ASSOCIATED WITH THE BOLT GROUP ECCENTRICITY TO THE COLUMN CENTERLINE.
7. WHERE DOUBLER PLATES ARE REQUIRED, THE WELD TO THE COLUMN WEB SHALL DEVELOP THE CAPACITY OF THE DOUBLER PLATE.

NOTES:
1. KICKER ANGLE SIZING AS FOLLOWS:
   -WHERE KICKER LENGTH <= 6 FT USE L3X3X3/8
   -WHERE KICKER LENGTH <= 12 FT USE L4X4X3/8
2. KICKERS SHALL BE USED AT ALL LOCATIONS WHERE A LATERAL LOAD IS APPLIED TO THE BOTTOM FLANGE OF A BEAM OR THE BOTTOM 2/3 OF THE BEAM WEB. THE FOLLOWING ARE COMMON CASES WHERE THIS OCCURS, HOWEVER THIS IS NOT AN ALL INCLUSIVE LIST:
   a. EXTERIOR WALL LATERAL CLIP
   b. CURTAIN WALL LATERAL TIE-BACK
   c. PRECAST LATERAL TIE
   d. ECCENTRIC STAIR HANGER LOAD
   e. OTHER INSTANCES THAT IMPART A LATERAL OR ECCENTRIC LOAD TO THE BEAM
3. AT LOCATIONS WHERE THERE IS AN INFRAMING PERPENDICULAR BEAM WITHIN 12" OF THE LATERAL LOAD, THE KICKER MAY BE OMITTED. THE IN-FRAMING BEAM SHALL UTILIZE A FULL DEPTH STIFFNER CONNECTION TO BRACE THE BOTTOM BEAM FLANGE.

## 4 TYPICAL KICK-BRACE DETAIL

SCALE: 1" = 1'-0"

## 6 TYPICAL WF BEAM CONNECTION TO JOIST

SCALE: 3/4" = 1'-0"

## 5 TYPICAL LATERAL MOMENT CONNECTIONS (R=3)

SCALE: 1" = 1'-0"

Bergmeyer
BOS - 51 Sleeper St. 6th Floor Boston, MA 02210 617.542.1025
LA - 800 South Figueroa St. Suite 1600 Los Angeles, CA 90017 212.337.1050
www.bergmeyer.com

CONSULTANTS:
H+O STRUCTURAL ENGINEERING
51 MELCHER ST, FLR 1
BOSTON, MA 02210
617-938-3349

SEAL/ SIGNATURE:

STATE OF MISSOURI
JEREMIAH C. O'NEILL
NUMBER
PE-2020009130
PROFESSIONAL ENGINEER

| NO. | BY | DATE | DESCRIPTION |
|---|---|---|---|

SHAKE SHACK

SHAKE SHACK - LEE'S SUMMIT MO

2051 NW LOWENSTEIN DRIVE
LEE'S SUMMIT, MISSOURI 64081
SHACK #1348

PERMIT/BID SET

STEEL DETAILS I

| | |
|---|---|
| DRAWN BY: | ESP |
| CHECKED BY: | RFH |
| JOB NO: | 20-128 |

S500

1/11/2021 12:47:31 PM C:\Users\EricPicard\Hayes & O'Neill\20-128 Shake Shack Lees Summit - Documents\03 Structural Drawings\Structural Revit\20-128 Shake Shack Lee's Summit - Structural - R20.19.rvt

RELEASE FOR CONSTRUCTION
AS NOTED ON PLANS REVIEW
DEVELOPMENT SERVICES
LEE'S SUMMIT, MISSOURI
03/10/2021

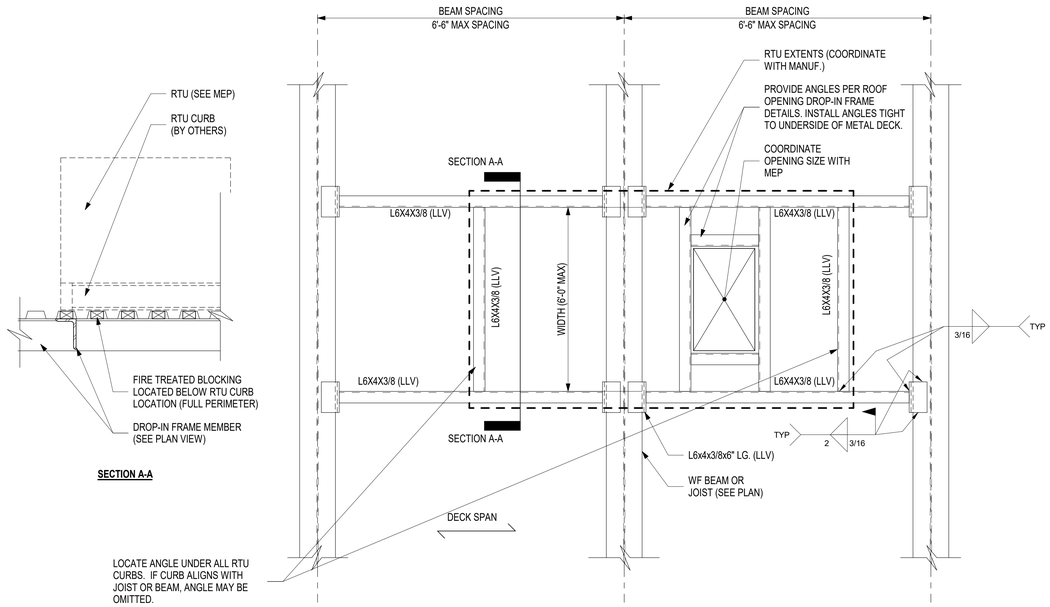


NOTES:
1. AT JOIST ROOFS, PROVIDE PANEL POINT LOAD REINFORCING AT CHANNEL OR ANGLE FRAME BEARING POINT.
2. PROVIDE FIRE TREATED SOLID BLOCKING BETWEEN IN ALL DECK FLUTES TO PROVIDE FULL BEARING FOR RTU CURBS.
3. DETAILS APPLY AT METAL ROOF DECK CONDITIONS ONLY.

2 TYPICAL RTU DROP-IN ROOF FRAME DETAILS
SCALE: 1" = 1'-0"

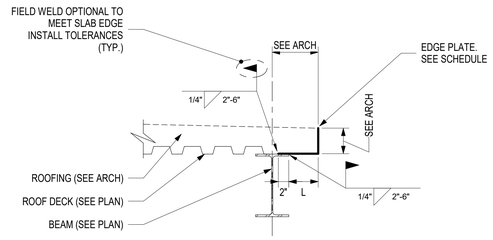


| ROOF EDGE CLOSURE | |
|---|---|
| POUR STOP SIZE | OVERHANG LENGTH "L" (IN.) |
| 18 GA. | 4" |
| 16 GA. | 6" |
| 14 GA. | 7" |
| 12 GA. | 9" |
| 10 GA. | 11" |
| 1/4" BENT PLATE | 18" |

1 TYPICAL ROOF EDGE PLATE DETAIL
SCALE: 1" = 1'-0"

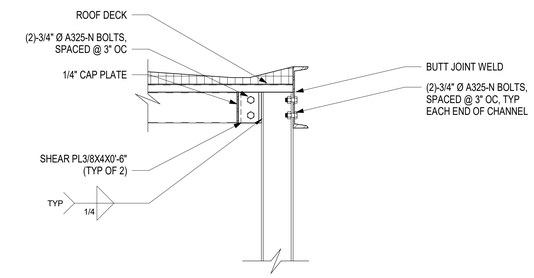


6 CANOPY DETAIL
S101 SCALE: 1" = 1'-0"

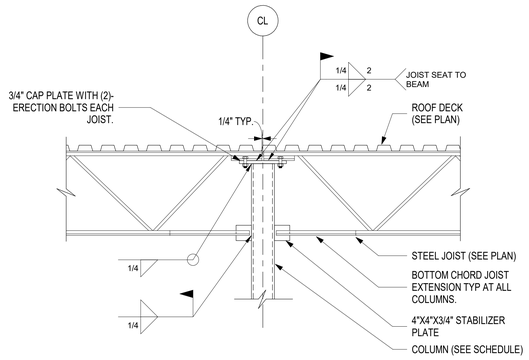


5 TYPICAL INTERIOR JOIST @ COLUMN
SCALE: 3/4" = 1'-0"

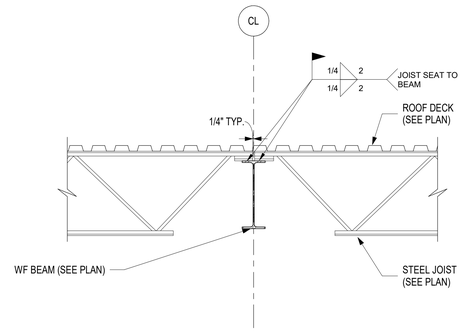


4 TYPICAL INTERIOR JOIST @ BEAM
SCALE: 3/4" = 1'-0"

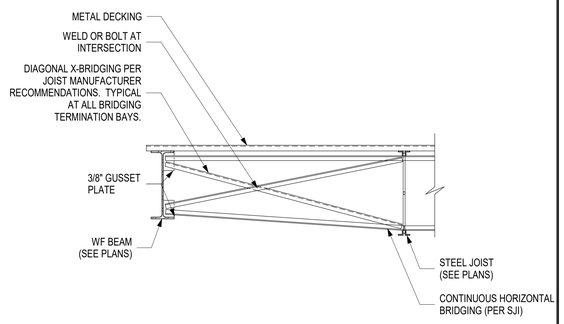


3 TYPICAL DETAIL JOIST BRIDGING
SCALE: 3/4" = 1'-0"

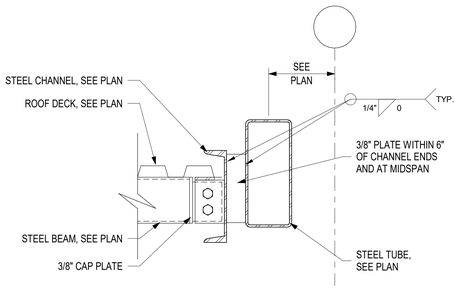


10 CANOPY DETAIL
S101 SCALE: 1 1/2" = 1'-0"

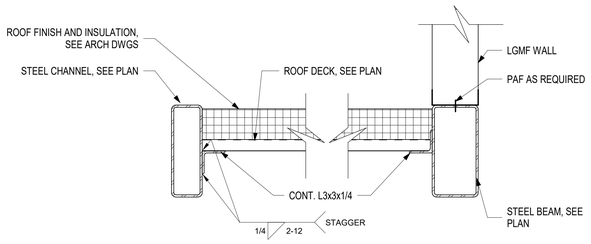


9 CANOPY DETAIL
S101 SCALE: 1 1/2" = 1'-0"

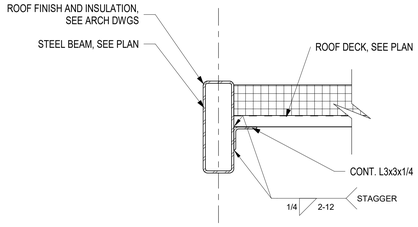


8 CANOPY DETAIL
S101 SCALE: 1 1/2" = 1'-0"

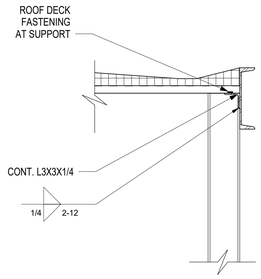


7 CANOPY DETAIL
S101 SCALE: 1" = 1'-0"

Bergmeyer
BOS - 51 Sleeper St. 5th Floor Boston, MA 02210 617.542.1025
LA - 800 South Figueroa St. Suite 1000 Los Angeles, CA 90017 212.337.1050
www.bergmeyer.com

CONSULTANTS:
T+O STRUCTURAL ENGINEERING
51 MELCHER ST, FLR 1
BOSTON, MA 02210
617-938-3349

SEAL/ SIGNATURE:
STATE OF MISSOURI
JEREMIAH C. O'NEILL
NUMBER
PE-2020009130
PROFESSIONAL ENGINEER

| NO. | BY | DATE | DESCRIPTION |
|---|---|---|---|

SHAKE SHACK

SHAKE SHACK - LEE'S SUMMIT MO

2051 NW LOWENSTEIN DRIVE
LEE'S SUMMIT, MISSOURI 64081
SHACK #1348

PERMIT/BID SET

STEEL DETAILS II

| | |
|---|---|
| DRAWN BY: | ESP |
| CHECKED BY: | RFH |
| JOB NO: | 20-128 |

S501

1/11/2021 12:47:03 PM C:\Users\EricPicard\Reyes & O'Neill\20-128 Shake Shack Lees Summit - Documents\03 Structural Drawings\Structural Revit\20-128 Shake Shack Lee's Summit - Structural - R20191.rvt

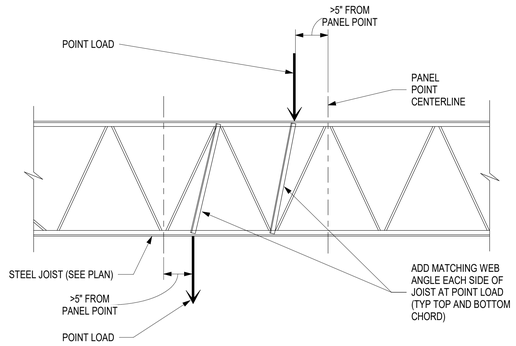


3 TYPICAL JOIST PANEL POINT REINFORCING
SCALE: 3/4" = 1'-0"

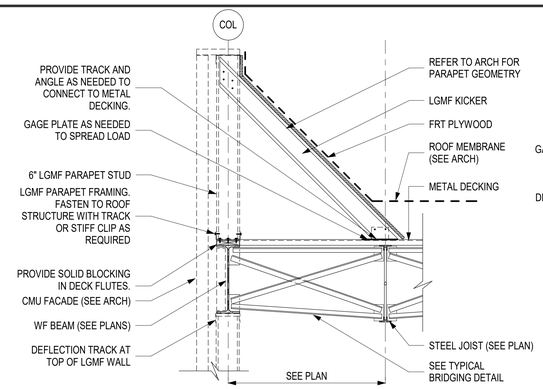


NOTE: LGMF SHOWN CONCEPTUALLY. LGMF SHALL BE ENGINEERED AND DETAILED BY LGMF SUBCONTRACTOR.

2 S102 TYPICAL PARAPET DETAIL
SCALE: 3/4" = 1'-0"

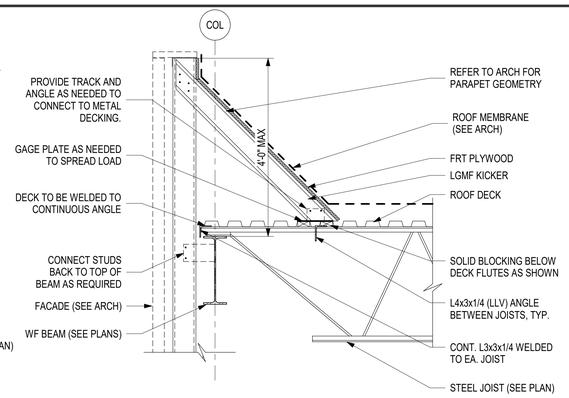


NOTE: LGMF SHOWN CONCEPTUALLY. LGMF SHALL BE ENGINEERED AND DETAILED BY LGMF SUBCONTRACTOR.

1 S102 TYPICAL PARAPET DETAIL
SCALE: 3/4" = 1'-0"

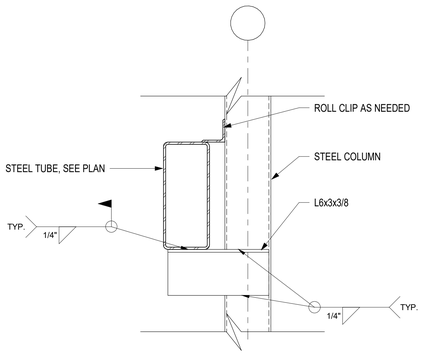


4 CANOPY - TUBE CONNECTION TO COLUMN
SCALE: 1 1/2" = 1'-0"

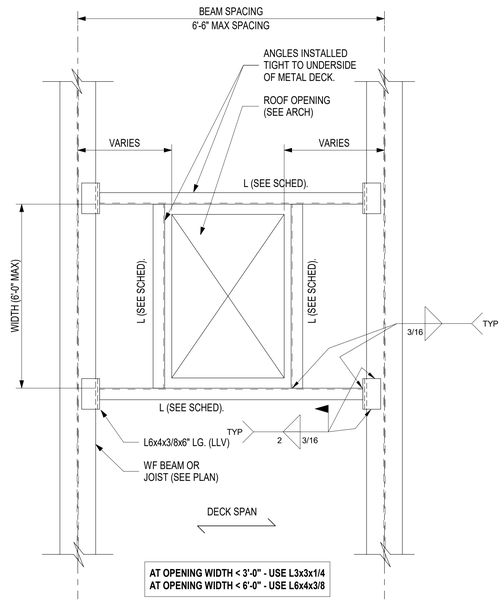


CONDITION A

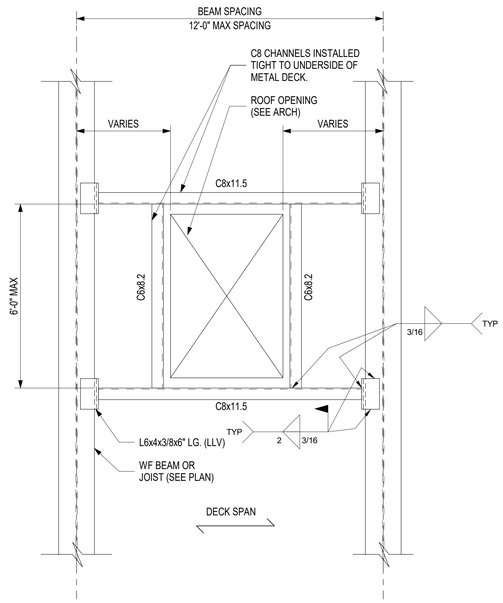


CONDITION B

NOTES:
1. AT JOIST ROOFS, PROVIDE PANEL POINT LOAD REINFORCING AT CHANNEL OR ANGLE FRAME BEARING POINT.
2. ROOF DECK TO BE WELDED TO DROP-IN SUPPORT FRAMING WITH 5/8"Ø PUDDLE WELDS @ 6" O.C. FULL PERIMETER.
3. DETAILS APPLY TO METAL ROOF DECK, DO NOT USE WITH CONCRETE TYPE ROOF DECKS.

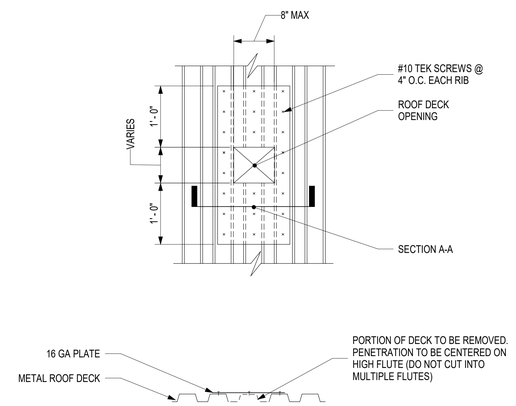


CONDITION C

NOTE:
1. DETAIL APPLIES TO OPENINGS LESS THAN 8" WIDE MEASURED PERPENDICULAR TO THE DECK SPAN.
2. WHEN OPENING EXCEEDS DIMENSION IN NOTE 1 PROVIDE DROP-IN ROOF FRAME PER CONDITION A OR B.
3. ROOF PENETRATION MUST BE SPACED A MINIMUM OF 24" APART. IF SPACING IS CLOSER PROVIDE DROP-IN ROOF FRAME PER CONDITION A OR B.

5 TYPICAL ROOF OPENING FRAMES @ METAL ROOF DECK
SCALE: 1" = 1'-0"

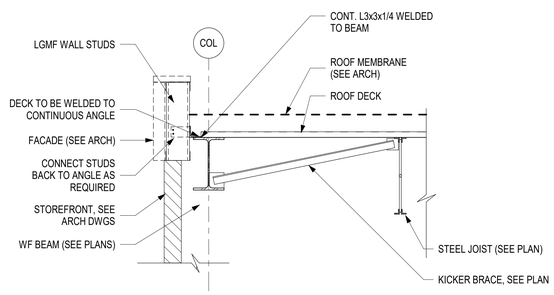


NOTE: LGMF SHOWN CONCEPTUALLY. LGMF SHALL BE ENGINEERED AND DETAILED BY LGMF SUBCONTRACTOR.

7 S102 DETAIL
SCALE: 3/4" = 1'-0"

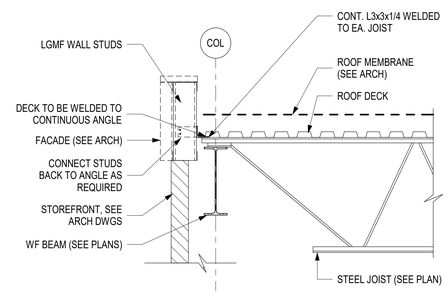


NOTE: LGMF SHOWN CONCEPTUALLY. LGMF SHALL BE ENGINEERED AND DETAILED BY LGMF SUBCONTRACTOR.

6 S102 DETAIL
SCALE: 3/4" = 1'-0"

RELEASE FOR CONSTRUCTION
AS NOTED ON PLANS REVIEW
DEVELOPMENT SERVICES
LEE'S SUMMIT, MISSOURI
03/10/2021

Bergmeyer
www.bergmeyer.com
LA - 800 South Figueroa St. Suite 1100, Los Angeles, CA 90017 212.337.1050
BOS - 51 Sleeper St. 6th Floor, Boston, MA 02210 617.542.1025

CONSULTANTS:
T+O STRUCTURAL ENGINEERING
51 MELCHER ST, FLR 1
BOSTON, MA 02210
617-938-3349

SEAL/ SIGNATURE:

STATE OF MISSOURI
JEREMIAH C. O'NEILL
NUMBER
PE-2020009130
PROFESSIONAL ENGINEER

| NO. | BY | DATE | DESCRIPTION |
|---|---|---|---|

SHAKE SHACK

SHAKE SHACK - LEE'S SUMMIT MO

2051 NW LOWENSTEIN DRIVE
LEE'S SUMMIT, MISSOURI 64081
SHACK #1348

PERMIT/BID SET

STEEL DETAILS III

| | |
|---|---|
| DRAWN BY: | ESP |
| CHECKED BY: | RFH |
| JOB NO: | 20-128 |

S502

1/11/2021 12:47:55 PM C:\Users\EricPacot\Hayes & O'Neill\20-128 Shake Shack Lees Summit - Documents\03 Structural Drawings\Structural Revit\20-128 Shake Shack Lees Summit - Structural - R2019.rvt

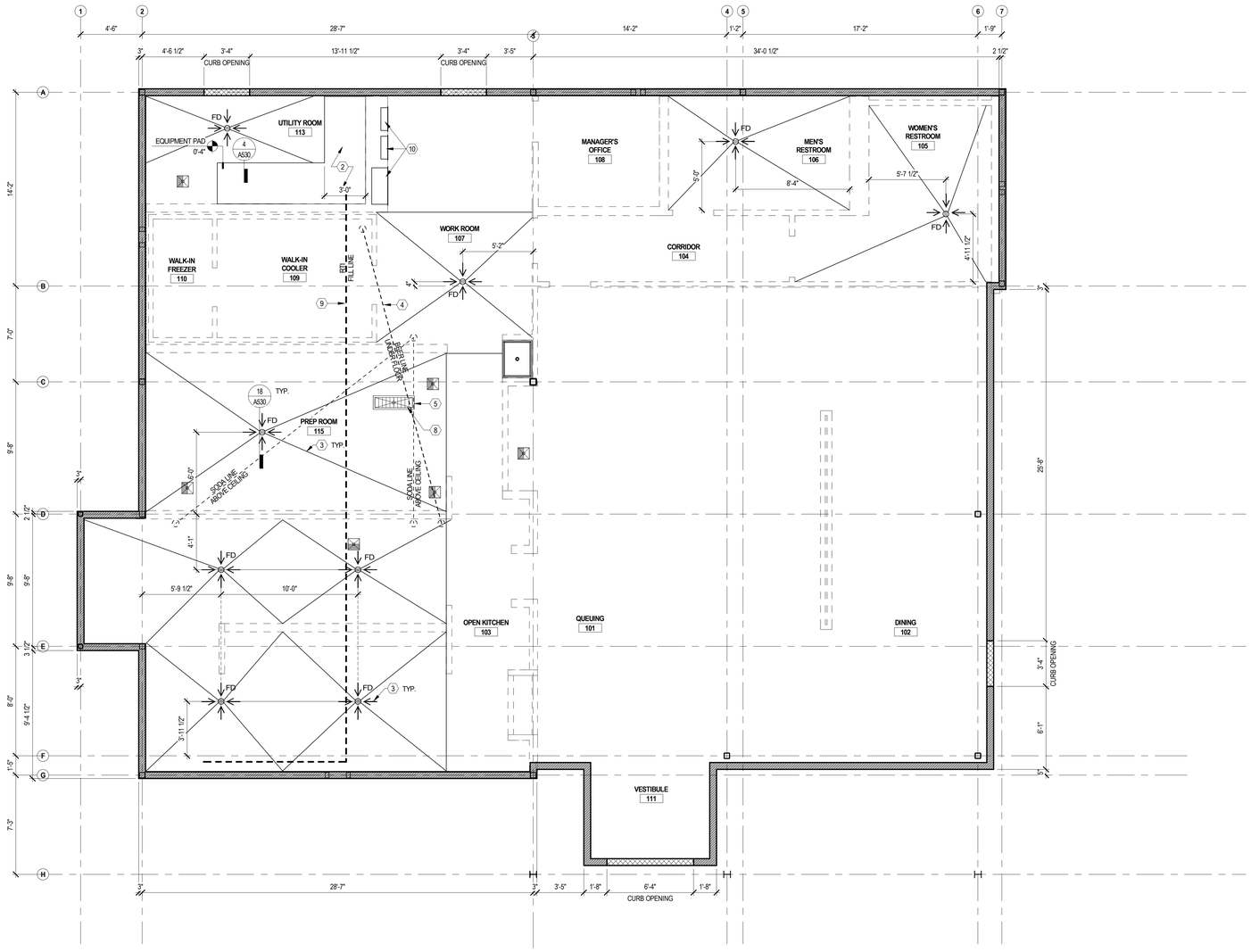


## CURB & FOUNDATION PLAN

1/4" = 1'-0"

1

## NOT USED

## KEY NOTES

1. FLOOR DRAINS & FLOOR SINKS. COORDINATE WITH KEC DRAWINGS AND PLUMBING DRAWINGS. REFER TO KEC DRAWINGS FOR DIMENSIONED LOCATIONS OF FLOOR SINKS AND FLOOR TROUGH
2. CONCRETE EQUIPMENT PAD, REFER TO DIMENSION PLAN FOR OVERALL DIMENSIONS; COORDINATE WITH STRUCTURAL DRAWINGS
3. INDICATES SLOPE TO DRAIN. GC TO COORDINATE MAX 1/8" SLOPE PER 12", TYP.
4. BEER LINES TO RUN THROUGH 6" PVC CONDUIT; UNIT RUN TO BE VERIFIED IN FIELD. COORDINATE WITH K-SHEETS AND OWNER'S VENDOR. CONDUIT TO EXTEND APPROX. 4"-6" AFF AND BE WATERPROOFED.
5. SODA LINE TO RUN ABOVE CEILING; UNIT RUN TO BE VERIFIED IN FIELD. COORDINATE WITH K-SHEETS AND OWNER'S VENDOR.
6. RTI FLUSH MOUNT FILL BOX CONNECTION POINT; GC TO COORDINATE FINAL LOCATION AND RUN WITH OWNER'S VENDOR
7. C02 FILL BOX CONNECTION POINT; GC TO COORDINATE FINAL LOCATION AND RUN WITH OWNER'S VENDOR
8. 4" DEEP DEPRESSION FOR FLOOR TROUGH; COORDINATE WITH K-SHEETS
9. RTI OIL FILL AND RETURN PIPING TO RUN ABOVE LAY-IN CEILING FROM RTI TANKS AND CONNECT TO FRYERS; GC TO PIPE TO OIL TANKS; COORDINATE WITH K-SHEETS AND OWNER'S VENDOR
10. ELECTRICAL PANELS, NO PLUMBING PIPING SHALL BE ROUTED OVER ELECTRICAL PANELS OR TRANSFORMERS AND THEIR WORKING SPACE. REFER TO E-SHEETS

## SYMBOL LEGEND

| SYMBOL | DESCRIPTION |
|---|---|
| | INTERIOR PARTITION |
| 01 | KEYNOTE |
| FD | FLOOR DRAIN; GC TO COORDINATE W/ P-SHEETS |
| | FLOOR SINK; GC TO COORDINATE W/ P-SHEETS & K-SHEETS |
| | SLOPE DIRECTION |
| | FLOOR TROUGH; GC TO COORDINATE W/ P-SHEETS & K-SHEETS |

## GENERAL NOTES

A. REFER TO STRUCTURAL DRAWINGS FOR CONCRETE DETAILING, MIX DESIGN & REINFORCING
B. ALL DIMENSIONS ARE TO FACE OF SHEATHING, UNLESS NOTED OTHERWISE.
C. ALL TARGET ELEVATIONS ARE TAKEN FROM T.O. CONCRETE SLAB

RELEASE FOR CONSTRUCTION
AS NOTED ON PLANS REVIEW
DEVELOPMENT SERVICES
LEE'S SUMMIT, MISSOURI
03/10/2021

Bergmeyer
BOS - 51 Sleeper St. 6th Floor Boston, MA 02210 617.542.1025
LA - 800 South Figueroa St. Suite 1060 Los Angeles, CA 90017 212.337.1090
www.bergmeyer.com

CONSULTANTS:

SEAL/ SIGNATURE:

| NO. | BY | DATE | DESCRIPTION |
|---|---|---|---|
| | | 2021-01-11 | PERMIT/BID SET |
| | | 2020-12-21 | 75% SET |

SHAKE SHACK

SHAKE SHACK - LEE'S SUMMIT MO

2051 NW LOWENSTEIN DRIVE
LEE'S SUMMIT, MISSOURI 64081
SHACK #1348

PERMIT/BID SET

CURB & FOUNDATION PLAN

| | |
|---|---|
| DRAWN BY: | CS & WQL |
| CHECKED BY: | JS |
| JOB NO: | 20068.00 |

A100

1/11/2021 6:05:28 PM C:\Users\djevine\Documents\068_Shake Shack-Lee's Summit_Central_djevine@bergmeyer.com.rvt

RELEASE FOR CONSTRUCTION
AS NOTED ON PLANS REVIEW
DEVELOPMENT SERVICES
LEE'S SUMMIT, MISSOURI
03/10/2021

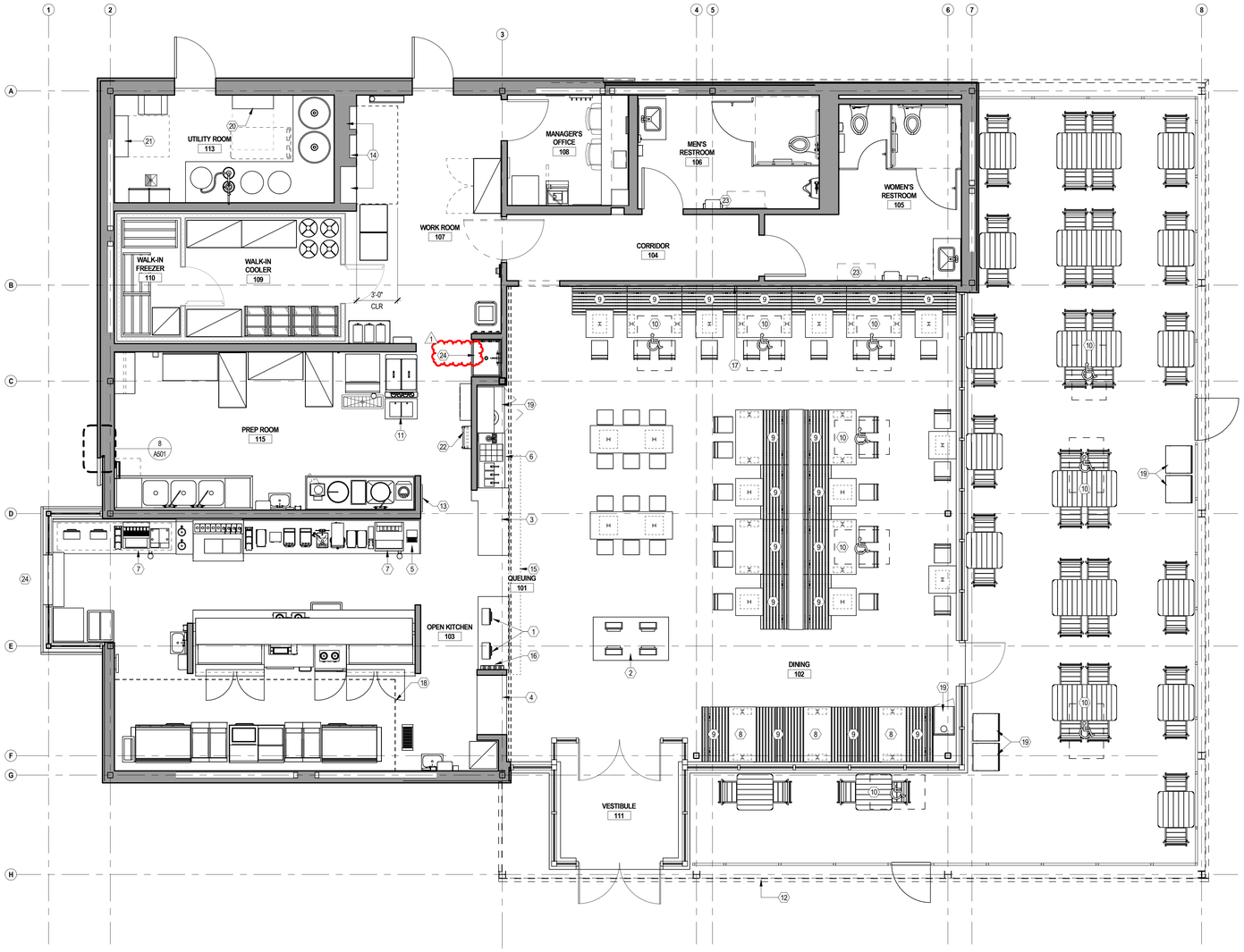


PROVIDED FOR REFERENCE ONLY

## GENERAL ARRANGEMENT PLAN

1/4" = 1'-0"
2'-0" 4'-0" 8'-0"

1

## NOT USED

## KEY NOTES

1. P.O.S. STATION
2. SELF-SERVICE KIOSKS
3. PICK-UP COUNTER
4. SHACK APP PICK-UP
5. BEER DISPENSER
6. CONDIMENT STATION; EVEREST WHITE COUNTERTOP
7. SODA MACHINE
8. FIXED TABLE
9. FIXED SEATING
10. ACCESSIBLE TABLE
11. CUSTARD MACHINE
12. EXTERIOR SIGN BAND ABOVE
13. LOCKABLE BULLETIN BOARD
14. ELECTRICAL PANELS; COORDINATE WITH E-SHEETS
15. MENU BOARDS
16. WINE RACK
17. STAND FOR SOMETHING GOOD NEON
18. KITCHEN HOOD OVERHEAD
19. WASTE RECEPTACLE; EVEREST WHITE COUNTERTOP
20. VERTICAL FIRE RISER
21. DOMESTIC WATER
22. ROOF LADDER
23. BABY CHANGING STATION
24. DRIVE THRU WINDOW
24. MOP SINK 1

## SYMBOL LEGEND

| SYMBOL | DESCRIPTION |
|---|---|
| | NEW PARTITION (FULL HEIGHT) |
| | NEW PARTITION (PARTIAL HEIGHT - SEE ELEV. FOR MORE INFO) |
| | PREFAB WALLS BY KEC |
| | NEW DOOR |
| 01 | KEYNOTE |

## GENERAL NOTES

A. REFER TO A104 FOR FURNITURE PLAN
B. REFER TO K-SHEETS FOR KITCHEN EQUIPMENT LAYOUT

Bergmeyer
BOS
51 Sleeper St.
6th Floor
Boston, MA 02210
617.542.1025
LA
800 South Figueroa St.
Suite 1080
Los Angeles, CA 90017
212.337.1090
www.bergmeyer.com

CONSULTANTS:

SEAL/ SIGNATURE:

| NO. | BY | DATE | DESCRIPTION |
|---|---|---|---|
| 1 | | 2021-03-09 | ADDENDUM 1 |
| | | 2021-01-11 | PERMIT/BID SET |
| | | 2020-12-21 | 75% SET |
| | | 2020-10-12 | DD SET |

SHAKE SHACK

SHAKE SHACK - LEE'S SUMMIT MO

2051 NW LOWENSTEIN DRIVE
LEE'S SUMMIT, MISSOURI 64081
SHACK #1348

PERMIT/BID SET

GENERAL ARRANGEMENT PLAN

| | |
|---|---|
| DRAWN BY: | CS & WQL |
| CHECKED BY: | JS |
| JOB NO: | 20068.00 |

A101

3/9/2021 1:45:05 PM C:\Users\djevine\Documents\068_Shake Shack-Lee's Summit_Central_djevine@bergmeyer.com.rvt

RELEASE FOR CONSTRUCTION
AS NOTED ON PLANS REVIEW
DEVELOPMENT SERVICES
LEE'S SUMMIT, MISSOURI
03/10/2021

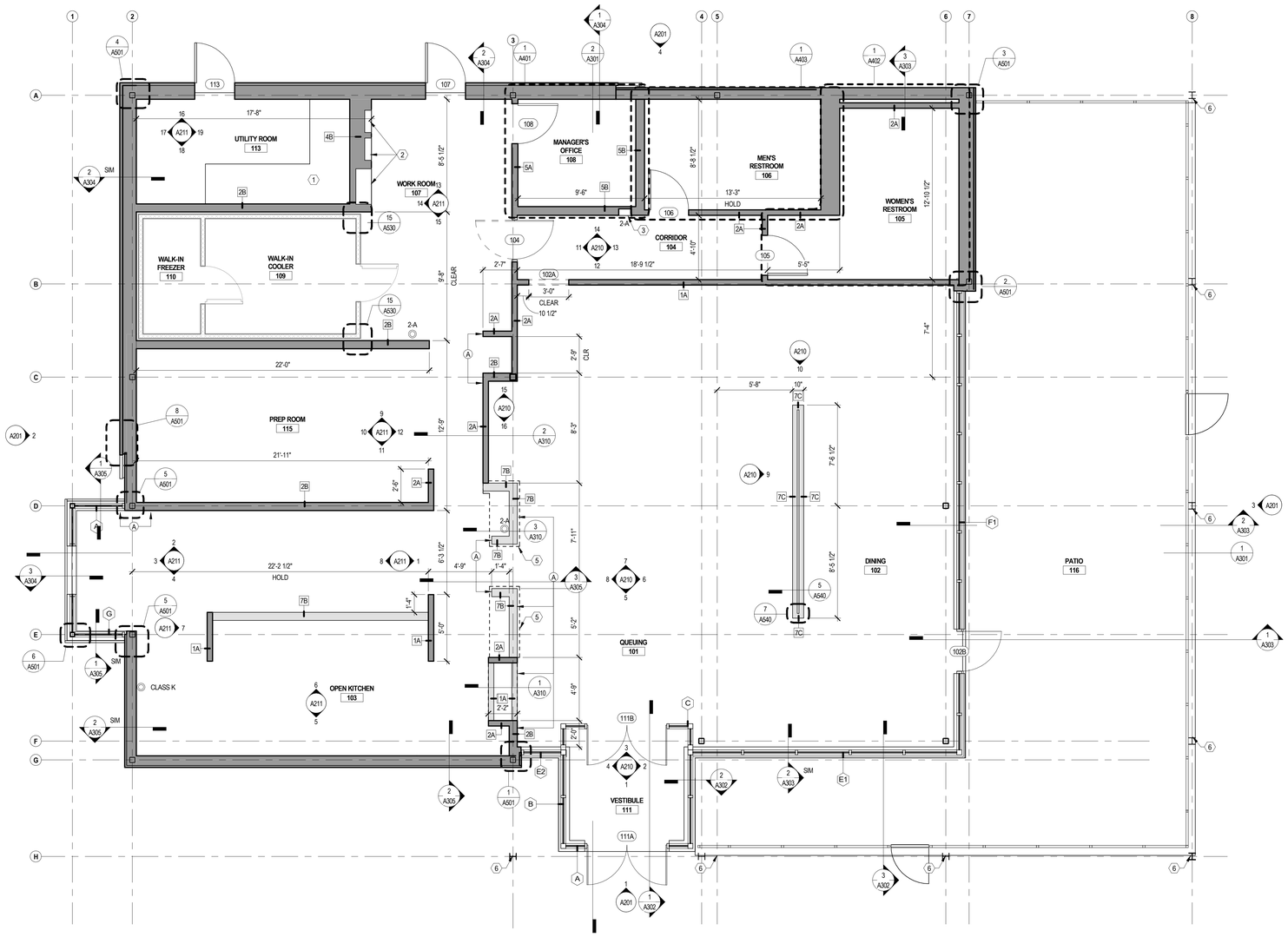


## DIMENSIONED PLAN

1/4" = 1'-0"
2'-0" 4'-0" 8'-0"

1

## NOT USED

## KEY NOTES

1. RAISED CONCRETE PLATFORM. REFER TO CURB & FOUNDATION PLAN.
2. LOCATION OF ELECTRICAL PANELS; COORDINATE WITH ELECTRICAL DRAWINGS
3. RECESSED FIRE EXTINGUISHER CABINET. REFER TO DETAIL Z3 / A530
4. PROVIDE (1) LAYER OF F.R.T. PLYWOOD AND (1) LAYER 5/8" GWB ON METAL STUDS IN MANAGER'S OFFICE ONLY.
5. DASHED LINE REPRESENTS COUNTERTOP. REFER TO A104 FOR DIMENSIONS OF GC BUILT COUNTER TOP.
6. NEW COLUMNS TO SUPPORT CANOPY ABOVE; REFER TO STRUCTURAL
7. PATIO RAILINGS AND GATES; REFER TO AS102

## SYMBOL LEGEND

| SYMBOL | DESCRIPTION |
|---|---|
| | NEW PARTITION (FULL HEIGHT) |
| | NEW PARTITION (PARTIAL HEIGHT - SEE ELEV. FOR MORE INFO) |
| | PREFAB WALLS BY KEC |
| | NEW DOOR |
| 101 | DOOR TAG. SEE SHEET A602 FOR DOOR SCHEDULE |
| 01 | KEYNOTE |
| 1A | WALL PARTITION TAG. SEE SHEET A510 FOR PARTITION DETAILS. |
| A | STOREFRONT TAG. SEE SHEET A603 |
| FE | FIRE EXTINGUISHER |
| A | ALIGN |

## GENERAL NOTES

A. WORK TO BE NEW U.N.O.
B. SEE RESPONSIBILITY SCHEDULE FOR DIVISION OF LABOR.
C. WORK SHALL COMPLY WITH FEDERAL, STATE AND LOCAL BUILDING CODES AND REGULATIONS.
D. GC IS RESPONSIBLE FOR MAINTAINING THE FIRE RATING INTEGRITY AT DEMISING AND FIRE RATED WALLS, EXISTING COLUMNS, AS WELL AS AT THE FLOOR AND FLOOR/ROOF ASSEMBLY ABOVE. VERIFY APPLICABLE CONDITIONS IN FIELD.
E. CONTRACTORS SHALL FIELD VERIFY CONDITIONS AND DIMENSIONS THAT IMPACT WORK PRIOR TO START OF CONSTRUCTION.
F. CONFLICTS BETWEEN SITE CONDITIONS AND DRAWINGS SHALL BE BROUGHT TO THE IMMEDIATE ATTENTION OF THE ARCHITECT/DESIGNER.
G. DIMENSIONS ARE TO BE TO FACE OF SHEATHING. U.N.O. APPLIED MATERIALS ARE TO BE APPLIED AFTER THE FINISH DIMENSIONS HAVE BEEN CONFIRMED.
H. SEE ENLARGED PLANS FOR DIMENSIONS WHICH ARE NOT SHOWN ON CONSTRUCTION PLAN.
I. DRAWINGS ARE NOT TO BE SCALED. VERIFY ANY MISSING OR CONFLICTING WRITTEN DIMENSIONS WITH THE ARCHITECT/DESIGNER PRIOR TO CONSTRUCTION.
J. NOTIFY ARCHITECT OF CONDITIONS WHERE CLEAR OR CRITICAL DIMENSIONS ARE DESIGNATED BUT CANNOT BE MET OR WHERE CORRIDOR/ AISLE WIDTH CANNOT MEET THE MINIMUM REQUIREMENT
K. MAINTAIN FINISH FLOOR BASE ELEVATION THROUGHOUT THE CONTRACT AREA SUCH THAT DIMENSIONS INDICATED AS ABOVE FINISH FLOOR ARE AT THE SAME ELEVATION.
L. GC SHALL SUPPLY FIELD CONDITIONS AND DIMENSIONS TO THE ARCHITECT, MILLWORKER, OWNER AND OWNER'S CONTRACTORS.
M. GC RESPONSIBLE FOR PREPARATION WORK REQUIRED TO INSTALL NEW FLOORING TO MANUFACTURER'S SPECIFICATIONS.
N. GC TO COORDINATE WITH OWNER'S VENDORS TO ALLOW FOR PROPER INSTALLATION OF OWNER SUPPLIED ITEMS. GC TO SCHEDULE DELIVERY / INSTALLATION DATES AT THE BEGINNING OF THE JOB TO GUARANTEE COMPLIANCE WITH CONSTRUCTION SCHEDULE.
O. TEMPERED GLASS TO BE USED IN LOCATIONS AS REQUIRED BY CODE.
P. ALIGN CENTERLINES OF FIRE EXTINGUISHERS AND MEP-FP DEVICES ON WALLS IN THE SAME LOCATION.
Q. DOORS HINGE SIDE TO BE 4" FROM WALL, U.N.O.
R. ALL WOOD BLOCKING, FRAMING, PLYWOOD, SUBFLOORS, ETC., TO BE FIRE TREATED (DESIGNATED F.R.T.)
S. OWNER AND ARCHITECT TO BE NOTIFIED AFTER FLOOR/ WALL LAYOUT FOR REVIEW PRIOR TO CONSTRUCTION.
T. REFER TO K-SHEETS, P-SHEETS AND THE CURB & FOUNDATION PLAN FOR FLOOR DRAINS, FLOOR SINKS, AND DEPRESSION LOCATIONS
U. FIRE EXTINGUISHERS SUPPLIED BY G.C.; PROVIDE FIRE EXTINGUISHERS IN QUANTITIES AND LOCATIONS AS REQUIRED BY CODE AND AUTHORITY HAVING JURISDICTION. REVIEW ADDITIONAL OR ALTERED LOCATIONS WITH THE ARCHITECT/DESIGNER PRIOR TO INSTALLATION.
V. ALL FLOOR, EXTERIOR WALL, FOUNDATION WALL AND ROOF PENETRATIONS TO BE SLEEVED AND WATERPROOFED.
W. REFER TO S-SHEETS FOR SCOPE OF CONCRETE AND TRENCHING
X. ALL FLOOR AND WALL PENETRATIONS THROUGH RATED ASSEMBLIES TO BE FIRE SEALED AS REQUIRED TO ACHIEVE A FIRE RESISTANCE RATING EQUAL TO THE RATED ASSEMBLY IN WHICH THE PENETRATION OCCURS.
Y. TAPE, SAND, AND PAINT ONLY AT WALLS BEHIND WALK IN COOLERS, FREEZERS.
Z. G.C. TO SUBMIT TO OWNER (1) HARD COPY AND (1) ELECTRONIC COPY OF THE OPERATION AND MAINTENANCE MANUAL.
AA. **SITE CAMERA(S) ARE REQUIRED FOR DURATION OF CONSTRUCTION: (2) FOR GROUND-UP (INTERIOR & EXTERIOR). CONTACT EARTHCAM FOR ORDERING. REFER TO VENDOR LIST FOR CONTACT INFO.**


Bergmeyer
BOS - 51 Sleeper St. 6th Floor Boston, MA 02210 617.542.1025
LA - 800 South Figueroa St. Suite 1060 Los Angeles, CA 90017 212.337.1090
www.bergmeyer.com


CONSULTANTS:

SEAL/ SIGNATURE:

| NO. | BY | DATE | DESCRIPTION |
|---|---|---|---|
| | | 2021-01-11 | PERMIT/BID SET |
| | | 2020-12-21 | 75% SET |

SHAKE SHACK

SHAKE SHACK - LEE'S SUMMIT MO

2051 NW LOWENSTEIN DRIVE
LEE'S SUMMIT, MISSOURI 64081
SHACK #1348

PERMIT/BID SET

DIMENSIONED PLAN

| | |
|---|---|
| DRAWN BY: | CS & WQL |
| CHECKED BY: | JS |
| JOB NO: | 20068.00 |

A102


1/11/2021 6:05:54 PM C:\Users\djevine\Documents\068_Shake Shack-Lee's Summit_Central_djevine@bergmeyer.com.rvt

RELEASE FOR CONSTRUCTION
AS NOTED ON PLANS REVIEW
DEVELOPMENT SERVICES
LEE'S SUMMIT, MISSOURI
03/10/2021

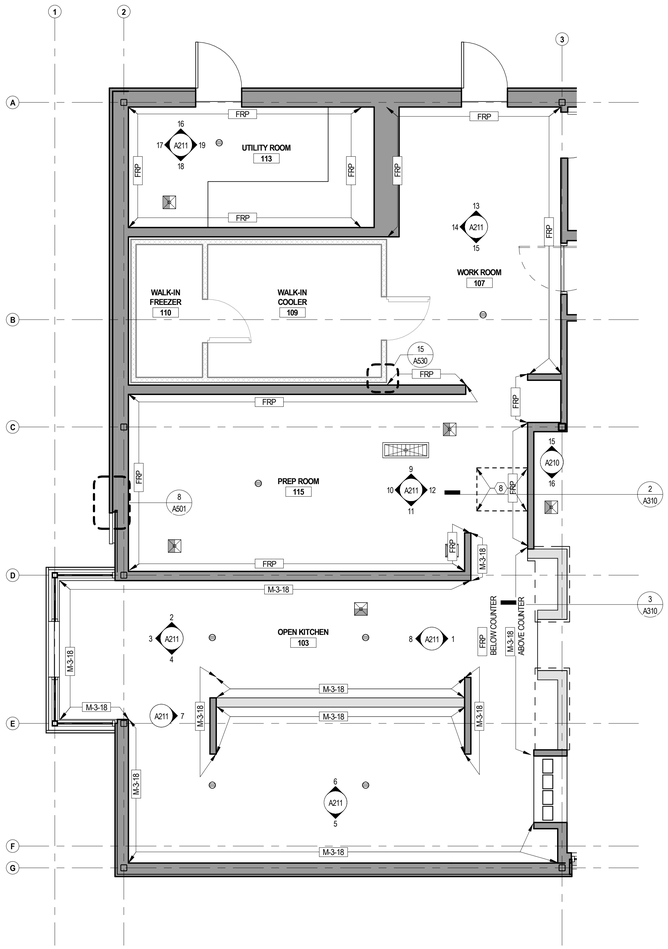


## FLOOR FINISH PLAN - BOH WALL FINISHES

1/4" = 1'-0" | 2

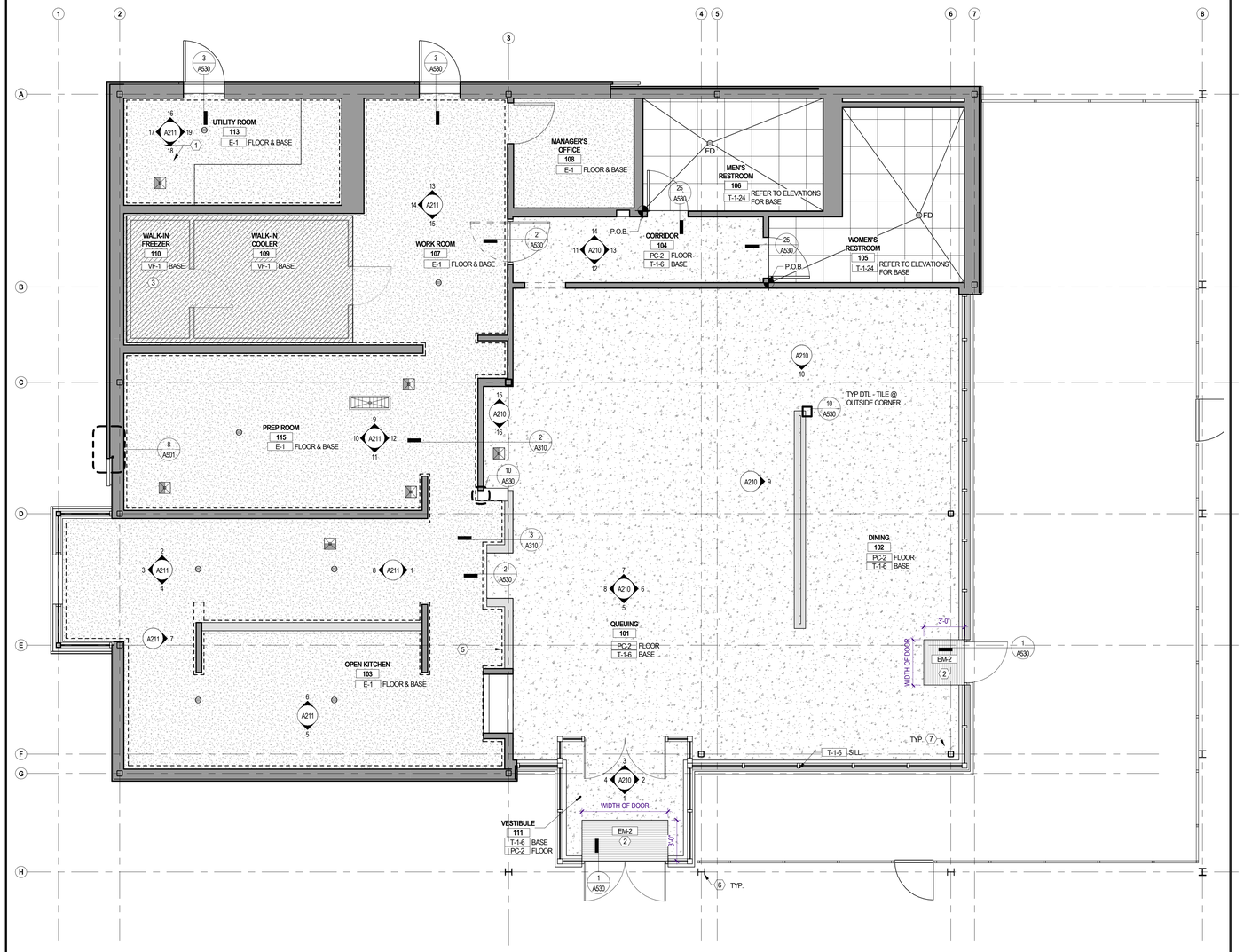


## FLOOR FINISH PLAN

1/4" = 1'-0" | 1

## NOT USED

## KEYNOTES

1. 4" ELEVATED UTILITIES CURB
2. LOOSE-LAY ROLL OUT MAT EM-2 , FINISH FLOOR BENEATH
3. PROVIDE LEVEL 3 FINISH BEHIND WALK-IN COOLER AND FREEZER
4. M-3-18 UP TO 4'-0" AFF AT MOP SINK WALLS.
5. LOCATION OF WATERPROOF MEMBRANE; REFER TO GENERAL NOTES FOR MORE INFORMATION
6. PAINT COLUMNS P-4 USE ZINC RICH PRIMER
7. PAINT INTERIOR COLUMNS P-4
8. INTERIOR WALLS OF ROOF HATCH ABOVE TO BE FINISHED ON ALL SIDES WITH FRP
9. PATIO RAILINGS AND GATE TO BE PAINTED; REFER TO AS102

## SYMBOL LEGEND

| SYMBOL | DESCRIPTION | SYMBOL | DESCRIPTION |
|---|---|---|---|
| | NEW PARTITION | PC-2 | POLISHED CONCRETE |
| | NEW PARTITION (PARTIAL HEIGHT - SEE ELEV. FOR MORE INFO) | E-1 | URETHANE CONCRETE COATING SYSTEM |
| | PREFAB WALLS BY KEC | VF-1 | WELDED SEAM FLOORING |
| | NEW DOOR | EM-2 | LOOSE LAY WALK-OFF MAT |
| 01 | KEYNOTE | | LEASE LINE |
| EIFS-1 | FINISH TAG, REFER TO FINISH SCHEDULE ON SHEET A601 | | WATERPROOF MEMBRANE 5 |
| A | ALIGN | | |
| | POINT OF BEGINNING (P.O.B) | | |
| | FLOOR DRAIN | | |
| | FLOOR SINK | | |
| | FLOOR TRENCH | | |

## GENERAL NOTES

A. **REFER TO SHEET A601 FOR FINISH SCHEDULE**
B. FINISHES TO BE NEW, U.N.O.
C. ENSURE SURFACES TO RECEIVE FINISHES ARE CLEAN, TRUE AND FREE OF IRREGULARITIES. DO NOT PROCEED WITH WORK UNTIL UNSATISFACTORY CONDITIONS HAVE BEEN CORRECTED.
D. FLOOR TO BE LEVEL TO 1/8" VARIANCE WITHIN 10'-0"
E. GC TO PROVIDE WATERPROOF MEMBRANE AT ALL WET AREAS. GC TO INSTALL WATERPROOFING AT 12" UP THE WALL AND 24" ONTO THE FLOOR.
F. PROVIDE CONTINUOUS SEALANT JOINT AT ALL FRP AND STAINLESS STEEL INTERSECTIONS AND AT TILE BASE, CEILINGS, DOOR FRAMES, PLUMBING / GAS / ELECTRICAL ROUGH-INS, AND MISCELLANEOUS PENETRATIONS
G. CAULK ALL JOINTS BETWEEN WALL TILE AND DOOR FRAMES; COLOR TO MATCH GROUT U.N.O IN DRAWING SET. INSTALL CLEAR SEALANT JOINTS WHERE WINDOWS ABUT A WOODMETAL FINISH U.N.O. IN DRAWING SET. INSTALL COLORED SEALANT JOINTS WHERE WINDOWS ABUT AN INTERIOR ALL SURFACE; COLOR TO MATCH STOREFRONT U.N.O. IN DRAWING SET.
H. TILE CONTRACTOR TO ENSURE THAT FLOOR TILE IS FLUSH WITH COVE BASE TILE PER HEALTH DEPARTMENT.
I. WALLS AND CEILINGS OF KITCHEN AND PREP AREAS SHALL HAVE A SMOOTH AND WASHABLE FINISH.
J. GC TO ENSURE THAT NEW FLOOR SLAB IS AT AN ACCEPTABLE TOLERANCE LEVEL TO MINIMIZE THE UPPAGE FOR THE REQUIRED FLOOR FINISH INSTALLATION; REFER TO FINISH SPECIFICATIONS FOR MORE INFORMATION; GC TO INFORM ARCHITECT OF DISCREPANCIES.
K. FLOOR SURFACE TO BE NON-SLIP WITH A MIN. SLIP CO-EFFICIENT OF FRICTION OF 0.6 OR BETTER
L. ALL MATERIAL TRANSITIONS TO MEET ADA GUIDELINES
M. ALL FLOOR PENETRATIONS TO BE SEALED, WATERPROOFED, AND FIRE RATED.
N. GC TO COORDINATE LOCATION AND QUANTITY OF MOVEMENT JOINTS IN ALL FLOORING
O. MAXIMUM FLOOR SLOPE IN ANY DIRECTION IS 1 IN 20.
P. GC TO SLOPE (MAX 2%) TO EXISTING DRAIN, FLUSH TO ABUTTING SIDEWALK AND ABUTTING GRADES
Q. **ALL KITCHEN FLOORS TO HAVE NO MORE THAN 1/8" PER FOOT SLOPE TO FLOOR DRAINS**
R. REFER TO REFLECTED CEILING PLAN, INTERIOR ELEVATIONS AND INTERIOR DETAILS FOR ADDITIONAL INFORMATION
S. GYPSUM BOARD WALLS TO BE TAPED AND SANDED TO LEVEL 4 FINISH, U.N.O.
T. **GC TO SUBMIT PROPOSED CONTROL JOINTS.**
U. PAINT FINISHES TO BE AS FOLLOWS:
   a. SEMI-GLOSS - DOORS, FRAMES, WINDOW TRIM
   b. EGGSHELL - WALLS
   c. FLAT - CEILINGS

1/11/2021 6:05:58 PM C:\Users\jdevine\Documents\008_Shake Shack Lee's Summit_Central_jdevine@bergmeyer.com.rvt


Bergmeyer
BOS - 51 Sleeper St. 6th Floor Boston, MA 02210 617.542.1025
LA - 800 South Figueroa St. Suite 1060 Los Angeles, CA 90017 212.337.1090
www.bergmeyer.com


CONSULTANTS:

SEAL/ SIGNATURE:

| NO. | BY | DATE | DESCRIPTION |
|---|---|---|---|
| | | 2021-01-11 | PERMIT/BID SET |
| | | 2020-12-21 | 75% SET |
| | | 2020-10-12 | DD SET |

SHAKE SHACK

SHAKE SHACK - LEE'S SUMMIT MO

2051 NW LOWENSTEIN DRIVE
LEE'S SUMMIT, MISSOURI 64081
SHACK #1348

PERMIT/BID SET

FLOOR FINISH PLAN

| | |
|---|---|
| DRAWN BY: | CS & WQL |
| CHECKED BY: | JS |
| JOB NO: | 20068.00 |

A103

RELEASE FOR CONSTRUCTION
AS NOTED ON PLANS REVIEW
DEVELOPMENT SERVICES
LEE'S SUMMIT, MISSOURI
03/10/2021

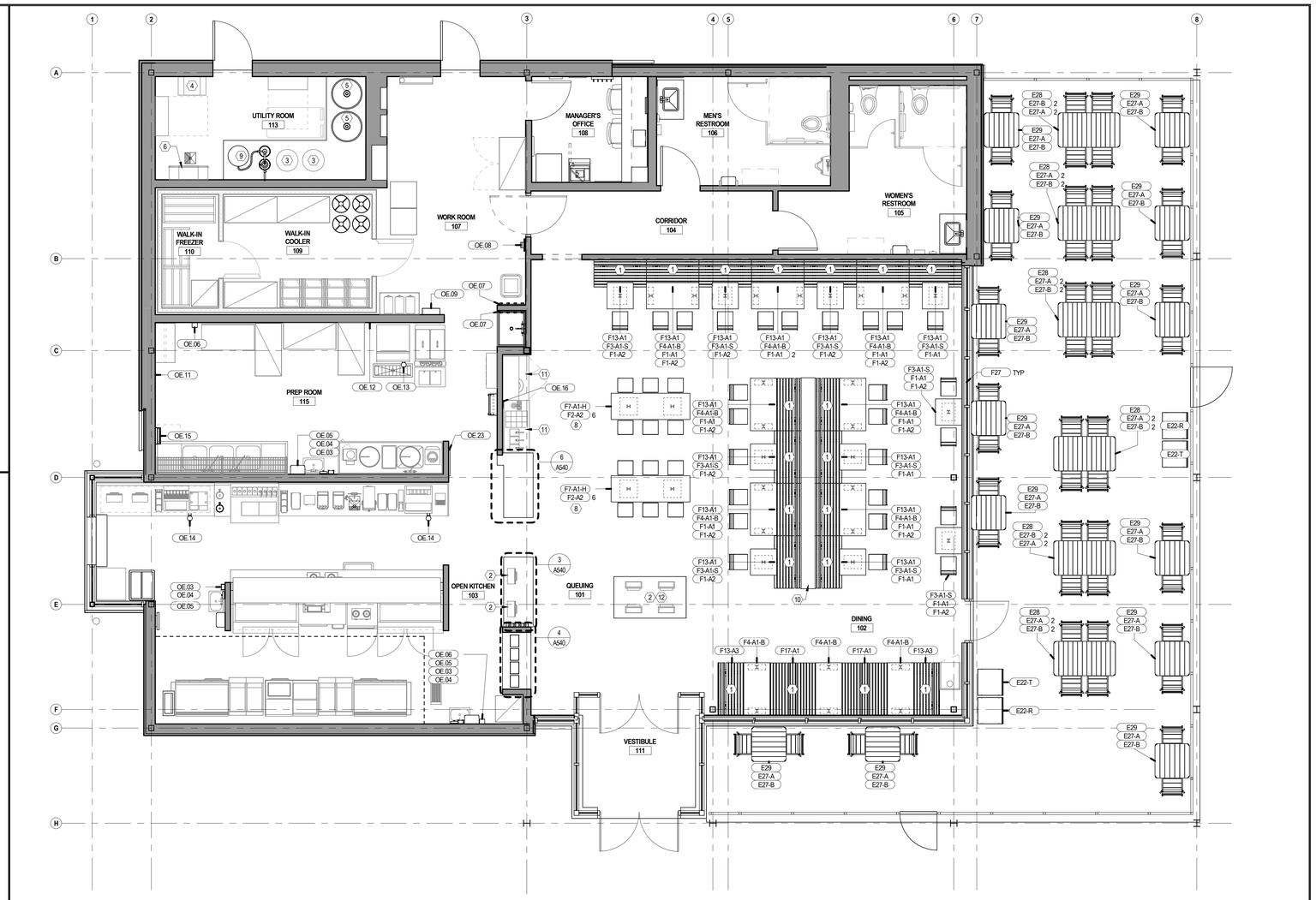


## FURNITURE & EQUIPMENT PLAN - FIRST FLOOR

1/4" = 1'-0"  1

## FURNITURE SCHEDULE

GC = GENERAL CONTRACTOR
O = OWNER / OWNER'S VENDOR

| TAG NO. | QTY | ITEM | MANUFACTURER | MODEL NO. | FINISH | RESPONSIBILITY FURNISH | RESPONSIBILITY INSTALL |
|---|---|---|---|---|---|---|---|
| E22-R | 2 | RECYCLING UNIT, OUTDOOR | PRIME EQUIPMENT SERVICES | | RECYCLE: RAL 6010 | O | GC |
| E22-T | 2 | TRASH UNIT, OUTDOOR | PRIME EQUIPMENT SERVICES | | TRASH: RAL 7021 | O | GC |
| E27-A | 25 | OUTDOOR CHAIR | FERMOB | LUXEMBOURG CHAIR | CACTUS | | |
| E27-B | 25 | OUTDOOR CHAIR | FERMOB | LUXEMBOURG CHAIR | CEDAR GREEN | | |
| E28 | 6 | OUTDOOR 4-TOP RECTANGULAR TABLE | FERMOB | LUXEMBOURG, 143x80cm STANDARD HEIGHT | ANTHRACITE | O | GC |
| E29 | 13 | OUTDOOR 2-TOP SQUARE TABLE | FERMOB | LUXEMBOURG, 80x80cm, STANDARD HEIGHT | ANTHRACITE | O | GC |
| F1-A1 | 13 | INDOOR CHAIR | UHURU | 18" X 17" X 32" H | TOP: NATURAL ASH; FRAME: RAL 7035 LIGHT GREY | O | GC |
| F1-A2 | 13 | INDOOR CHAIR | UHURU | 18" X 17" X 32" H | TOP: NATURAL ASH; FRAME: MATTE BLACK | O | GC |
| F2-A2 | 12 | BACKLESS BARSTOOL | UHURU | 14" X 15" X 29.5" H | TOP: NATURAL ASH; FRAME: MATTE BLACK | O | GC |
| F3-A1-S | 10 | 2-TOP SQUARE TABLE | COUNTEREVOLUTION | 24" W x 24" L x 30" H | TOP: SHAKE SHACK BROWN; BASE: BLACKENED STEEL | O | GC |
| F4-A1-B | 10 | 4-TOP -RECTANGULAR, BOOTH BASE | COUNTEREVOLUTION | 24" W x 48" L x 30" H | TOP: SHAKE SHACK BROWN; BASE: BLACKENED STEEL | O | GC |
| F7-A1-H | 2 | 6-TOP COMMUNITY TABLE - HIGH | COUNTEREVOLUTION | 24" X 72" X 42" H | TOP: SHAKE SHACK BROWN; BASE: BLACKENED STEEL | O | GC |
| F13-A1 | 15 | SINGLE BENCH - 48" | STAACH | 24" W x 48" L | WOOD: MAPLE / CLEAR; BASE: SPARTAN BRONZE | O | GC |
| F13-A3 | 2 | SINGLE BENCH - 48", FINISHED BACK | STAACH | 24" W x 48" L | WOOD: MAPLE / CLEAR; BASE: SPARTAN BRONZE | O | GC |
| F17-A1 | 2 | DOUBLE BENCH - 48" | STAACH | 42" W X 48" L | WOOD: MAPLE / CLEAR; BASE: SPARTAN BRONZE | O | GC |
| F27 | 15 | MANUAL SHADE | SKYCO / PHIFER; ORDER FROM ROLL-A-SHADE RETAILER | CEILING MOUNT, REGULAR ROLL W/ 3" FASCIA PANEL, 1-1/2" TUBE / SHEERWEAVE 4000 W/ DOW ECOLIBRIUM 5%; | | GC | GC |

**NOTE:** QUANTITY FOR REFERENCE ONLY, G.C. TO VERIFY WITH SHAKE SHACK CONSTRUCTION PROJECT MANAGER

## ACCESSORIES SCHEDULE

GC = GENERAL CONTRACTOR
O = OWNER / OWNER'S VENDOR

| TAG NO. | QTY | ITEM | MANUFACTURER | MODEL NO. | RESPONSIBILITY FURNISH | RESPONSIBILITY INSTALL |
|---|---|---|---|---|---|---|
| OE.03 | 3 | GLOVE BOX DISPENSER | SAN JAMAR | G0801 | O | GC |
| OE.04 | 3 | SOAP DISPENSER | BOBRICK | 2112 / 667005 | O | GC |
| OE.05 | 3 | PAPER TOWEL DISPENSER | TORK | 551028A / 10073286621211 | O | GC |
| OE.06 | 2 | HAIR NET DISPENSER | CELLUCAP | D503 | O | GC |
| OE.07 | 2 | MOP & BROOM HOLDER | FRANKLIN MACHINE PRODUCTS | 159-1140 | O | GC |
| OE.08 | 1 | WET FLOOR SIGN HOLDER | GEERPRES | 5047 | O | GC |
| OE.09 | 1 | FIRST AID CABINET | AFASSCO | 186 | O | GC |
| OE.11 | 1 | PREP PEG BOARD | DIAMOND LIFE | PEGBOARD MX 2X4 | O | GC |
| OE.12 | 1 | ICE BUCKET HANGING BRACKET | SAN JAMAR | 101558 | O | GC |
| OE.13 | 1 | ICE SCOOP - LARGE | SAN JAMAR | S17700 / 6021258 | O | O |
| OE.14 | 2 | ICE SCOOP - SMALL | SAN JAMAR | S17700 / 650629 | O | O |
| OE.15 | 1 | KNIFE HOLDER | SAN JAMAR | STK1008 | O | GC |
| OE.16 | 1 | FRAMED CHOKING SIGN | - | - | O | GC |
| OE.23 | 1 | LOCKABLE BULLETIN BOARD W/ ONE DOOR | NORWOOD COMMERCIAL FURNITURE | NOR-EB0203-I-BULLETIN | GC | GC |

## KEYNOTES

1. GC TO SEAL ALL EDGES WHERE BOOTH / BENCH / TABLE BASE PLATE MEETS THE FLOOR W/ CLEAR SEALANT
2. P.O.S. STATION BY OWNER'S VENDOR. G.C. TO PROVIDE POWER & DATA AS REQUIRED. REFER TO KEC AND ELECTRICAL
3. CO2 TANK BY OWNER'S CONTRACTOR. REFER TO K-SHEETS, SECURE TANKS AS REQUIRED. G.C. TO COORDINATE WITH OWNER'S CONTRACTOR. REFER TO SHEET A100 FOR ESTIMATED RUN, INSTALLATION BY CO2 VENDOR, VERIFY ACTUAL REQUIRED RUN IN FIELD.
4. WALL MOUNTED NITROGEN GENERATOR BY OWNER'S VENDOR; GC TO PROVIDE POWER & BLOCKING IN WALL
5. RTI TANKS; REFER TO KEC
6. WATER HEATERS; REFER TO MEP
7. WATER HEATER EXPANSION TANK MOUNTED ON SHELF ABOVE WATER HEATERS. REFER TO PLUMBING
8. GC TO INSTALL COAT HOOKS AT UNDERSIDE OF TABLE. HOOKS WILL BE PROVIDED BY OWNER'S VENDOR, COORDINATE WITH OWNER'S CONSTRUCTION PM AND PROCUREMENT TEAM
9. WATER SOFTENER; REFER TO MEP
10. CUSTOM MILLWORK; REFER TO DETAILS
11. EVEREST WHITE CORIAN COUNTERTOP
12. FREESTANDING KIOSK PROCURED BY SHAKE SHACK

## SYMBOL LEGEND

| SYMBOL | DESCRIPTION |
|---|---|
| | NEW PARTITION |
| | NEW PARTITION (PARTIAL HEIGHT - REFER TO ELEV. FOR MORE INFO) |
| | PREFAB WALLS BY KEC |
| | NEW DOOR |
| 01 | KEYNOTE |
| XX.00 TAG NOTE | FURNITURE TAG |

## GENERAL NOTES

A. SEE RESPONSIBILITY SCHEDULE FOR DIVISION OF LABOR.
B. NOTIFY ARCHITECT OF CONDITIONS WHERE CLEAR OR CRITICAL DIMENSIONS ARE DESIGNATED BUT CANNOT BE MET.
C. GC TO COORDINATE WITH OWNER'S VENDORS TO ALLOW FOR PROPER INSTALLATION OF OWNER SUPPLIED ITEMS.
D. GC SHALL ENSURE THAT FINISH CARPENTRY AND STAINLESS STEEL EQUIPMENT WILL NOT BE DAMAGED BY OTHER CONSTRUCTION WORK.
E. DRAWING TUBE FOR RECORD SET TO BE LOCATED IN THE OFFICE.
F. BOLT DOWN ALL FIXED FURNITURE (BOOTHS AND HIGH TABLES).

Bergmeyer
BOS - 51 Sleeper St. 6th Floor Boston, MA 02210 617.542.1025
LA - 800 South Figueroa St. Suite 1060 Los Angeles, CA 90017 212.337.1090
www.bergmeyer.com

CONSULTANTS:

SEAL/ SIGNATURE:

| NO. | BY | DATE | DESCRIPTION |
|---|---|---|---|
| | | 2021-01-11 | PERMIT/BID SET |
| | | 2020-12-21 | 75% SET |
| | | 2020-10-12 | DD SET |

SHAKE SHACK

SHAKE SHACK - LEE'S SUMMIT MO

2051 NW LOWENSTEIN DRIVE
LEE'S SUMMIT, MISSOURI 64081
SHACK #1348

PERMIT/BID SET

FURNITURE & EQUIPMENT PLAN

| | |
|---|---|
| DRAWN BY: | CS & WQL |
| CHECKED BY: | JS |
| JOB NO: | 20068.00 |

A104

1/11/2021 6:06:24 PM C:\Users\djevine\Documents\006_Shake Shack Lee's Summit_Central_djevine@bergmeyer.com.rvt

RELEASE FOR CONSTRUCTION
AS NOTED ON PLANS REVIEW
DEVELOPMENT SERVICES
LEE'S SUMMIT, MISSOURI
03/10/2021

## TACTILE SIGNAGE MOUNTING LEGEND

LEGEND IS PROVIDED FOR GENERAL GUIDLINES FOR MOUNTING OF TACTILE SIGNAGE. **GC TO REFER TO INTERIOR ELEVATIONS FOR MOUNTING HEIGHTS OF SIGNAGE.** CONFIRM LOCATIONS WITH OWNER PRIOR TO INSTALL. BOTTOM OF LOWEST TACTILE CHARACTER AT SIGNAGE SHALL BE 48" MAX. ALERT ARCHITECT IF HEIGHT SHOWN IN ELEVATION CONFLICTS WITH THIS REQUIREMENT.
*NOT ALL SIGNAGE IS APPLICABLE TO EACH PROJECT. REFER TO SIGANGE SCHEDULE FOR SIGNAGE AT THIS LOCATION.*

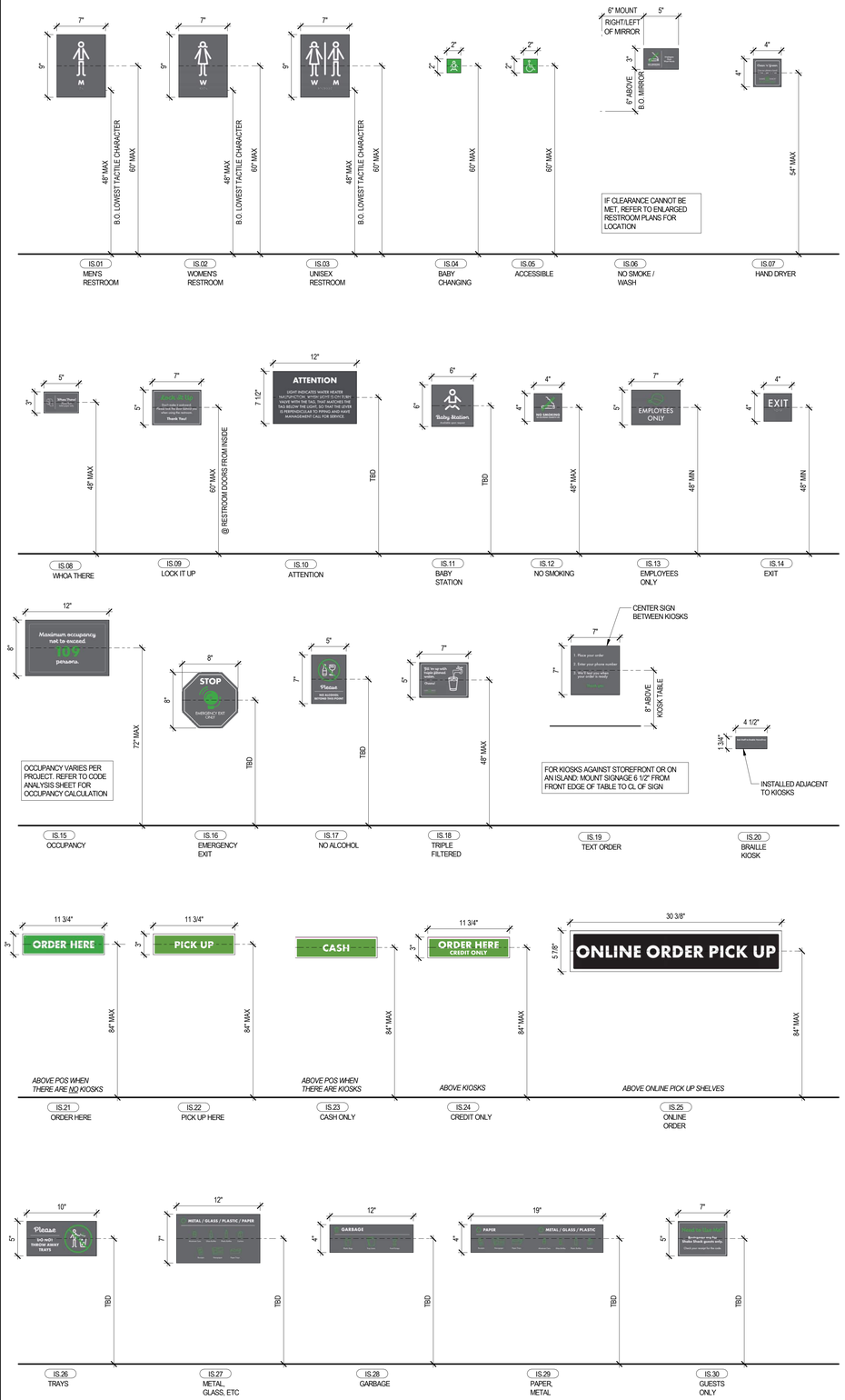


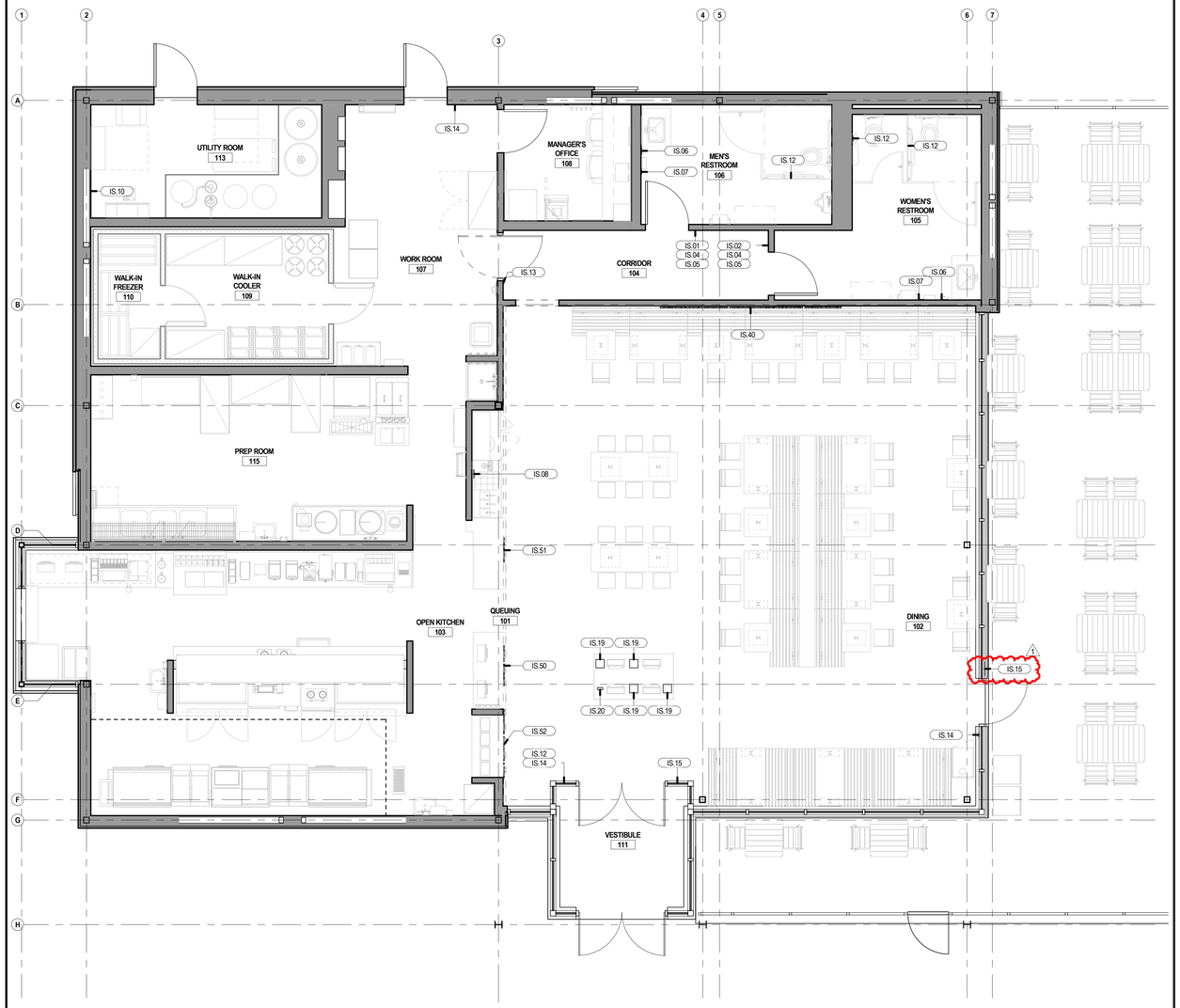


## SIGNAGE AND GRAPHICS PLAN

1/4" = 1'-0"

## SIGNAGE & GRAPHICS SCHEDULE

GC = GENERAL CONTRACTOR
O = OWNER / OWNERS VENDOR

| TAG NO. | QTY | ITEM | MANUFACTURER | MODEL NO. | RESPONSIBILITY FURNISH | RESPONSIBILITY INSTALL |
|---|---|---|---|---|---|---|
| IS.01 | 1 | RESTROOM SIGNAGE - MEN | JONES SIGNS | | O | GC |
| IS.02 | 1 | RESTROOM SIGNAGE - WOMEN | JONES SIGNS | | O | GC |
| IS.04 | 2 | BABY CHANGE SIGN | JONES SIGNS | | O | GC |
| IS.05 | 2 | ACCESSIBLE SIGN | JONES SIGNS | | O | GC |
| IS.06 | 2 | NO SMOKE / WASH | JONES SIGNS | | O | GC |
| IS.07 | 2 | HAND DRYER SIGN | JONES SIGNS | | O | GC |
| IS.08 | 1 | TRIPLE-FILTERED WATER SIGN | JONES SIGNS | | O | GC |
| IS.10 | 1 | EMPLOYEES ONLY | JONES SIGNS | | O | GC |
| IS.12 | 4 | WHOA THERE! SIGN | JONES SIGNS | | O | GC |
| IS.13 | 1 | EMPLOYEES ONLY | JONES SIGNS | | O | GC |
| IS.14 | 1 | EXIT SIGN | JONES SIGNS | | O | GC |
| IS.15 | 2 | OCCUPANCY SIGN | JONES SIGNS | | O | GC |
| IS.19 | 4 | TEXT ORDER - KIOSK SIGNAGE | JONES SIGNS | | O | GC |
| IS.20 | 1 | BRAILLE | JONES SIGNS | | O | GC |
| IS.40 | 1 | SFSG NEON | JONES SIGNS | STAND FOR SOMETHING GOOD NEON | O | GC |
| IS.50 | 1 | ORDER HERE | JONES SIGNS | | O | GC |
| IS.51 | 1 | PICK UP HERE | JONES SIGNS | | O | GC |
| IS.52 | 1 | SHACK TRACK | JONES SIGNS | | O | GC |

**NOTE**: REFER TO INTERIOR ELEVATIONS AND RCP FOR DIMENSION LOCATIONS OF SIGNAGE THAT IS NOT DIMENSIONED ON PLAN

## PLACEMENT OF ACCESSIBLE SIGNAGE

REFER TO FLOOR PLANS AND INTERIOR ELEVATIONS FOR SIGNAGE APPLICABLE OUTSIDE EACH RESTROOM. THIS EXAMPLE IS TO SHOW HOW TO LOCATE ACCESSIBLE SIGN AND BABY CHANGE SIGN, AS REQ'D

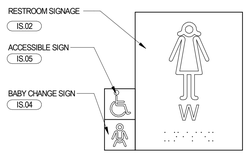


## GENERAL NOTES

A. SEE RESPONSIBILITY SCHEDULE FOR DIVISION OF LABOR.
B. GC TO COORDINATE WITH OWNER'S VENDORS TO ALLOW FOR PROPER INSTALLATION OF OWNER SUPPLIED ITEMS.
C. REFER TO TACTILE SIGNAGE LEGEND FOR ADDITIONAL NOTES
D. **SIGNS MOUNTED TO GLAZING TO HAVE IDENTICAL BLANK PLATE INSTALLED ON OPPOSITE SIDE OF GLAZING TO HIDE MOUNTING HARDWARE. COORDINATE WITH SIGNAGE VENDOR.**

## SYMBOL LEGEND

| SYMBOL | DESCRIPTION |
|---|---|
| | NEW PARTITION |
| | NEW PARTITION (PARTIAL HEIGHT - REFER TO ELEV. FOR MORE INFO) |
| | PREFAB WALLS BY KEC |
| | NEW DOOR |
| IS.XX | SIGNAGE TAG |


Bergmeyer
BOS - 51 Sleeper St. 6th Floor Boston, MA 02210 617.542.1025
LA - 800 South Figueroa St. Suite 1060 Los Angeles, CA 90017 212.337.1090
www.bergmeyer.com


CONSULTANTS:

SEAL/ SIGNATURE:

| NO. | BY | DATE | DESCRIPTION |
|---|---|---|---|
| 1 | | 2021-03-09 | ADDENDUM 1 |
| | | 2021-01-11 | PERMIT/BID SET |
| | | 2020-12-21 | 75% SET |

SHAKE SHACK

SHAKE SHACK - LEE'S SUMMIT MO

2051 NW LOWENSTEIN DRIVE
LEE'S SUMMIT, MISSOURI 64081
SHACK #1348

PERMIT/BID SET

SIGNAGE AND GRAPHICS PLAN

DRAWN BY: CS & WQL
CHECKED BY: JS
JOB NO: 20068.00

A105

C:\Users\djevine\Documents\068_Shake Shack-Lee's Summit_Central_djevine@bergmeyer.com.rvt
3/9/2021 1:45:26 PM

RELEASE FOR CONSTRUCTION
AS NOTED ON PLANS REVIEW
DEVELOPMENT SERVICES
LEE'S SUMMIT, MISSOURI

03/10/2021

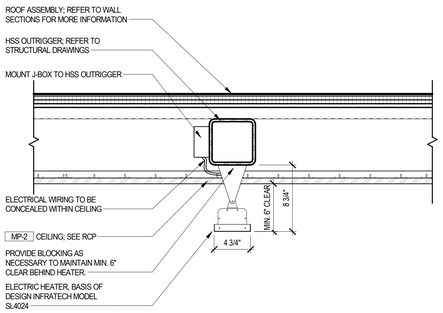


## TYP DETAIL - ELECTRIC HEATER

1 1/2" = 1'-0" | 3

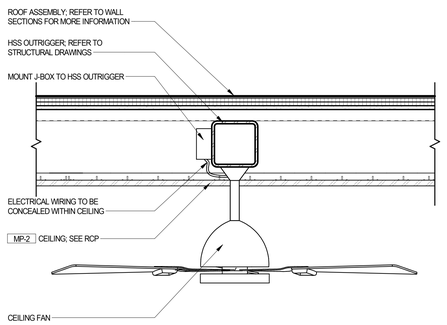


## TYP DETAIL - CEILING FAN

1 1/2" = 1'-0" | 2

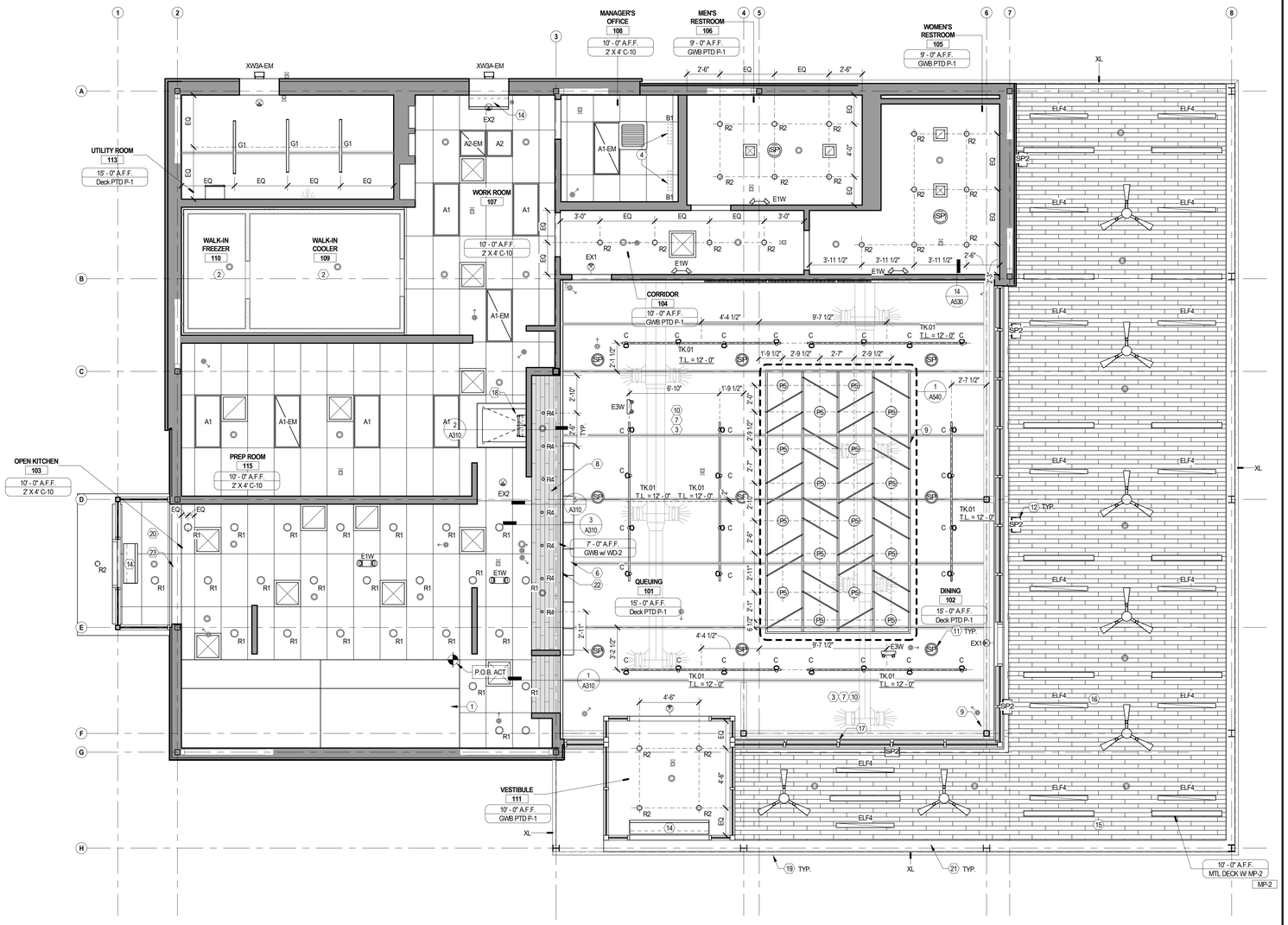


## REFLECTED CEILING PLAN

1/4" = 1'-0" | 1

## LIGHT FIXTURE SCHEDULE

| TAG NO. | QTY | ITEM | COMMENTS |
|---|---|---|---|
| A1 | 5 | TROFFER - 2 X 4, 4000K | |
| A1-EM | 3 | TROFFER - 2 X 4, 4000K | |
| A2 | 1 | TROFFER - 2 X 2, 4000K | |
| A2-EM | 1 | TROFFER - 2 X 2, 4000K | |
| B1 | 2 | UNDERCABINET LED | |
| C | 28 | TRACK HEAD - UNIVERSAL, PAR30, WHITE FINISH | |
| E1W | 5 | EMERGENCY BUG EYE - WHITE | |
| E3W | 2 | EMERGENCY BUG EYE - WHITE | |
| ELF4 | 16 | RECESSED LINEAR LIGHT - 4'-0", WET LOCATION | |
| EX1 | 3 | EXIT SIGN (FOH) | |
| EX2 | 3 | EXIT SIGN - BOH | |
| G1 | 3 | LED STRIPLIGHT - 48" | |
| P5 | 16 | LED PENDANT W/ GLOBE SHADE | |
| R1 | 25 | DOWNLIGHT - 6 IN LED, WHITE | |
| R2 | 22 | DOWNLIGHT, ADJUSTABLE - 4 IN LED, SATIN CHROME | |
| R4 | 7 | DOWNLIGHT - MINI LED GIMBAL | |
| TK.01 | 7 | SINGLE CIRCUIT TRACK, WHITE FINISH | |
| XL | 4 | LED TAPE LIGHT - WET LOCATIONS | |
| XW3A-EM | 2 | WALL PACK WITH EMERGENCY BATTERY BACK UP | |

## KEYNOTES

1. LOCATION OF KITCHEN HOOD; REFER TO MECHANICAL; PROVIDE STRUCTURAL SUPPORT AS NECESSARY
2. WALK-IN COOLER CEILING & LIGHTING BY KITCHEN CONTRACTOR; REFER TO KEC
3. EXPOSED DUCTWORK; PAINT P-1
4. PLUG IN OFFICE LIGHT FIXTURE UNDER SHELVES BY GC; REFER TO ENLARGED MANAGERS OFFICE PLAN FOR MORE INFORMATION
5. DIFFUSERS, RETURNS, AND ANY CEILING OR SOFFIT ELECTRICAL / MECHANICAL EQUIPMENT TRIMS / PLATES TO BE PAINTED TO MATCH ADJACENT SURFACE
6. MENU BOARDS, BY OWNER'S VENDOR; GC TO PROVIDE IN-WALL BLOCKING, COORDINATE WITH OWNER'S VENDOR
7. PAINT ALL EXPOSED STRUCTURE P-1
8. SEAL WOOD @ SOFFIT TO PROVIDE A SMOOTH, CLEANABLE SURFACE.
9. WOOD SLATS & FRAME
10. ACOUSTIC CEILING BOARD APPLIED TO UNDERSIDE OF DECK, IN FRONT OF HOUSE WHERE DECK IS EXPOSED C-2
11. INTERIOR SPEAKERS FURNISHED BY OWNER'S VENDOR, INSTALLED BY GC. COORDINATE FINAL LOCATIONS W/ OWNER'S VENDOR PRIOR TO INSTALLATION, TYP. INSTALL U.O. INTERIOR SPEAKER @ 2'-0" ABOVE U.O. TRACK LIGHTS OR P7 PENDANT LIGHT. SPEAKER TO BE WHITE FINISH
12. EXTERIOR SPEAKERS FURNISHED BY OWNER'S VENDOR, INSTALLED BY GC. COORDINATE FINAL LOCATIONS W/ OWNER'S VENDOR PRIOR TO INSTALLATION, TYP. REFER TO EXTERIOR ELEVATIONS FOR MOUNTING HEIGHT. SPEAKER TO BE BLACK FINISH
13. SECURITY CCTV CAMERAS FURNISHED BY OWNER'S VENDOR, INSTALLED BY GC. U.O. CAMERAS 6" BELOW TRACK / PENDANT FIXTURES.
14. AIR CURTAIN, REFER TO MEPFP
15. EXTERIOR CANOPY WITH WOOD LOOK HARD CEILING
16. EXTERIOR CEILING FAN. MOUNT BOTTOM OF FAN @ 9'-0" AFF. REFER TO ELECTRICAL DRAWINGS;
17. WINDOW SHADES, REFER TO FURNITURE AND EQUIPMENT PLAN FOR MORE INFORMATION
18. ROOF LADDER / ROOF HATCH
19. EXTERIOR CANOPY, PAINT EXPOSED STEEL P-4
20. CEILING MOUNTED NOTIFICATION LIGHT FOR DRIVE-UP WINDOW
21. 16 GA. BREAK METAL BAND TO OUTLINE PERIMETER OF CANOPY CEILING; REFER TO CANOPY DETAILS. PAINT BREAK METAL P-4
22. INTERIOR SIGN BAND P-4
23. GWB CEILING; REFER TO 4 / A502

## SYMBOL LEGEND

| SYMBOL | DESCRIPTION | SYMBOL | DESCRIPTION |
|---|---|---|---|
| | 24" X 24" SUPPLY DIFFUSER | | 24" X 48" ACT SUSPENDED CEILING SYSTEM C-10 |
| | 24" X 24" RETURN DIFFUSER | EQ EQ EQ | ALL CEILING MOUNTED FIXTURES ARE TO BE CENTERED ON ACT CEILING GRID, TYP UNO |
| | RESTROOM EXHAUST FAN | SP | INDOOR SPEAKER; WHITE |
| | 12" X 12" SUPPLY DIFFUSER | SP2 | OUTDOOR SPEAKER; BLACK |
| | POINT OF BEGINNING | | SECURITY CAMERA |
| A | ALIGN | | SPRINKLER; REFER TO MEPFP |
| T.L. = X'-X" | TRACK LENGTH | | FIRE ALARM DEVICE; REFER TO MEPFP |
| | FINISH TAG; REFER TO FINISH SCHEDULE ON SHEET A601 | | |
| | EXIT SIGN, WALL MOUNTED. CENTER ABOVE DOOR | | |
| | EXIT SIGN, CEILING MOUNTED | | |
| | LEASE LINE | | |

## GENERAL NOTES

A. SEE MEP-FP DRAWINGS FOR LIGHT FIXTURE SCHEDULE. MUST COORDINATE WITH ARCHITECT'S CEILING PLAN. NOTIFY ARCHITECT AND ENGINEER OF DISCREPANCIES.
B. SEE MEP-FP DRAWINGS FOR QUANTITY AND SPECIFICATION OF SPRINKLER, HVAC AND LIFE SAFETY SYSTEMS. GC TO PROVIDE COORDINATED SHOP DRAWINGS FOR ABOVE CEILING SYSTEMS TO ARCHITECT FOR REVIEW AND APPROVAL.
C. CONFIRM LOCATION OF EXIT SIGNS, HORNSTROBES AND SMOKE DETECTORS PRIOR TO LAYOUT.
D. REFER TO MEP-FP DRAWINGS FOR EMERGENCY LIGHTING AND NIGHT LIGHTS.
E. CONSULT ARCHITECT FOR DIRECTION WITH CONFLICT BETWEEN STRUCTURE, MECHANICAL EQUIPMENT, SPRINKLERS, LIGHTING, ETC.
F. DIMENSIONS TO CENTERLINE OF FIXTURE, UNO.
G. A/V SYSTEM LAYOUT IS DIAGRAMMATIC. VERIFY SYSTEM EXTENT AND EQUIPMENT QUANTITIES WITH OWNERS VENDOR.
H. GC TO SUPPLY HANGERS AND SUPPORTS REQUIRED FOR INSTALLATION OF LIGHT FIXTURES INCLUDING THREADED ROD FOR TRACK.
I. LIGHTING TRACK DIMENSIONS, SIZES, SHOWN ON PLAN ARE ROUNDED TO NEAREST INCH. VERIFY EXACT DIMENSION IN FIELD.
J. PROVIDE EMERGENCY LIGHTING ALONG PATH OF EGRESS INCLUDING EXIT ACCESS CORRIDORS, PASSAGEWAYS AND AISLES IN ROOMS AND SPACES WHICH REQUIRE TWO MEANS OF EGRESS. THE MEANS OF EGRESS ILLUMINATION LEVEL SHOULD NOT BE LESS THAN ONE FOOTCANDLE AT THE FLOOR LEVEL.
K. WHERE LOCATED IN ACT, REGISTERS AND LIGHTING FIXTURES TO BE WITHIN GRID LINES. CENTER SPRINKLER HEADS, SPEAKERS, RECESSED FIXTURES AND SIMILAR CEILING ELEMENTS WITHIN CEILING MODULE, UNO.
L. COORDINATE GRID START POINTS WITH ARCHITECT. CENTER GRID IN CLOSED ROOMS, UNO, AVOID LESS THAN 1/2 TILES WHERE POSSIBLE.
M. GC TO COORDINATE WITH ALL TRADES INVOLVED TO ENSURE CLEARANCES FOR ALL CEILING RELATED APPURTENANCES NECESSARY TO MAINTAIN THE SPECIFIED FINISH CEILING HEIGHT AS NOTED ON THE DRAWINGS.
N. GC TO PROVIDE ACCESS PANEL AT HARD CEILINGS FOR ALL ELECTRICAL JUNCTION BOXES, VALVES, ETC.
O. **ALL LIGHT TRIM RING FINISHES ARE TO BE PAINTED TO MATCH ADJACENT CEILING / SOFFIT COLOR.**


Bergmeyer
BOS - 51 Sleeper St. 6th Floor Boston, MA 02210 617.542.1025
LA - 800 South Figueroa St. Suite 1060 Los Angeles, CA 90017 212.337.1090
www.bergmeyer.com


CONSULTANTS:

SEAL/ SIGNATURE:

| NO. | BY | DATE | DESCRIPTION |
|---|---|---|---|
| | | 2021-01-11 | PERMIT/BID SET |
| | | 2020-12-21 | 75% SET |
| | | 2020-10-12 | DD SET |

SHAKE SHACK

SHAKE SHACK - LEE'S SUMMIT MO

2051 NW LOWENSTEIN DRIVE
LEE'S SUMMIT, MISSOURI 64081
SHACK #1348

PERMIT/BID SET

REFLECTED CEILING PLAN

DRAWN BY: CS & WQL
CHECKED BY: JS
JOB NO: 20068.00

A120

C:\Users\djevine\Documents\908_Shake Shack-Lee's Summit_Central_djevine@bergmeyer.com.rvt
1/11/2021 6:05:58 PM

RELEASE FOR CONSTRUCTION
AS NOTED ON PLANS REVIEW
DEVELOPMENT SERVICES
LEE'S SUMMIT, MISSOURI

03/10/2021

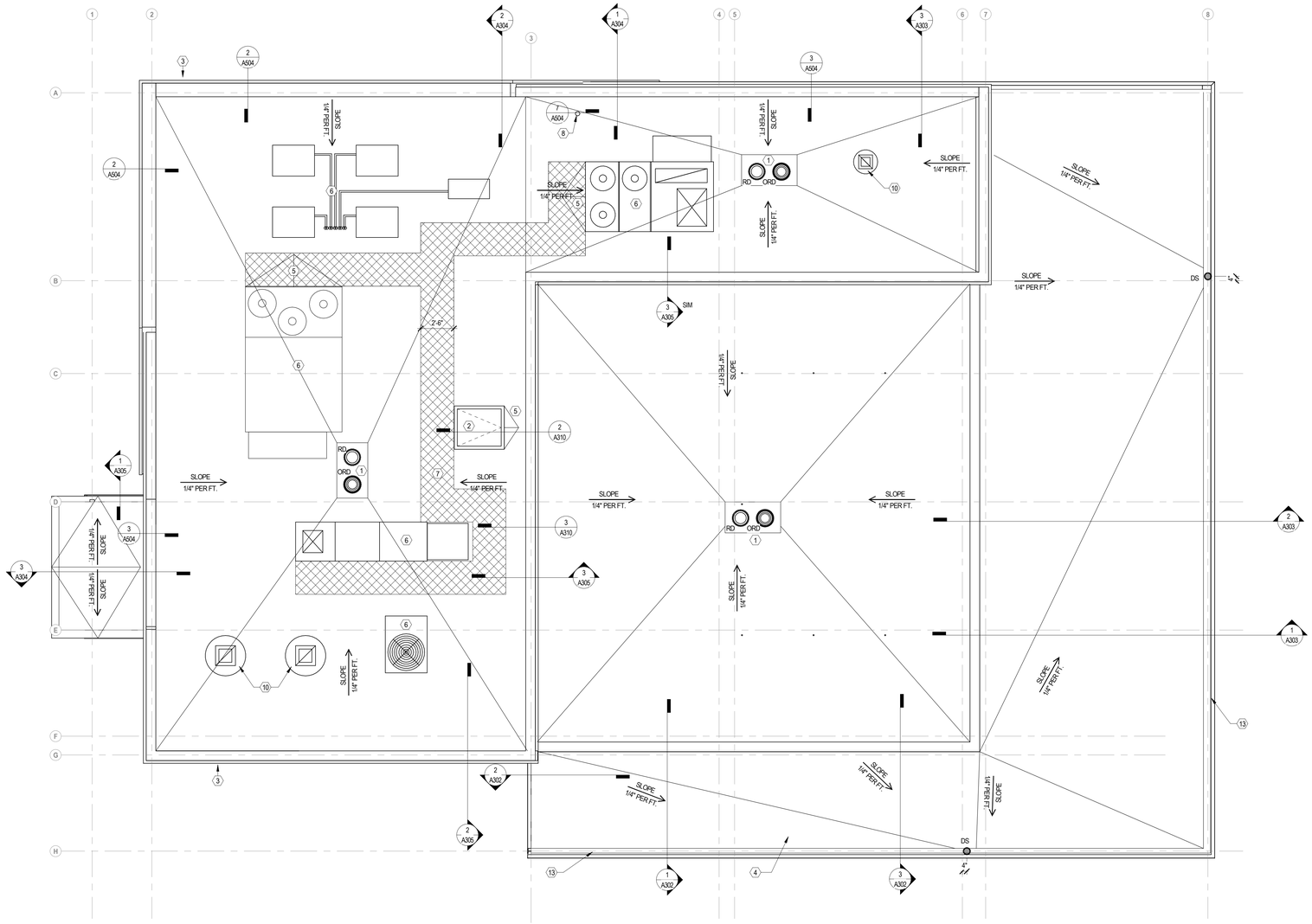


## ROOF PLAN

1/4" = 1'-0"
2'-0" 4'-0" 8'-0"

1

## NOT USED

## KEY NOTES

1. ROOF DRAIN AND OVERFLOW DRAIN; REFER TO PLUMBING DRAWINGS
2. LOCKABLE ROOF HATCH; BASIS OF DESIGN: BILCO, TYPE S ROOF HATCH, THERMALLY BROKEN, 36" X30"
3. EXTERIOR SIGNAGE BY OWNER'S SIGNAGE CONTRACTOR, FILE SIGNAGE UNDER SEPARATE PERMIT. GC TO PROVIDE POWER AS REQUIRED; COORDINATE WITH OWNER'S VENDOR AND ELECTRICAL DRAWINGS
4. STEEL CANOPY WITH ROOF; REFER TO STRUCTURAL DRAWINGS FOR STEEL SIZES; PAINT ALL EXPOSED STEEL P-4
5. ROOF CRICKET, TAPER INSULATION TO CREATE 1/4" PER 12" SLOPE, PROVIDE CRICKET AT ALL ROOF EQUIPMENT AS REQUIRED;
6. ROOF EQUIPMENT; REFER TO MECHANICAL DRAWINGS
7. ROOF WALKWAY PAD, SHOWN SCHEMATICALLY FOR BID PURPOSE. INSTALL AS REQUIRED TO PROVIDE CONTINUOUS PATH TO SERVICE SIDE OF ALL EQUIPMENT
8. VENT THROUGH ROOF; REFER TO PLUMBING DRAWINGS
9. AIR INTAKE FOR MANAGER'S OFFICE; REFER TO MECHANICAL DRAWINGS
10. EXHAUST FAN; REFER TO MECHANICAL DRAWINGS
11. TAPERED INSULATION, PITCH TOWARDS ROOF DRAINS, TYP
12. WRAP ROOFING AT THE ENDS OF PARAPET WALLS
13. PVC ROOF TROUGH AROUND ROOF PERIMETER
14. PROVIDE TAPERED RIGID INSULATION 1/8" PER FOOT TO DOWNSPOUT LOCATION, TYP
15. ROOF MOUNTED ATTIC VENTILATOR; MOUNT EVERY +/- 8'-0" ALONG HIGH PARAPET WALL

## SYMBOL LEGEND

| SYMBOL | DESCRIPTION |
|---|---|
| 01 | KEYNOTE |
| | INDICATES SURFACE WALKING PADS 7 |
| | LEASE LINE |
| ORD | OVERFLOW ROOF DRAIN |
| RD | ROOF DRAIN |
| CR | CRICKET 5 |
| XX X'-X" | ELEVATION HEIGHT |
| SLOPE 1/4" PER FT. | INDICATES DIRECTION OF SLOPE |

## GENERAL NOTES

A. WORK SHALL COMPLY WITH FEDERAL, STATE AND LOCAL BUILDING CODES AND REGULATIONS.
B. CONFLICTS BETWEEN SITE CONDITIONS AND DRAWINGS SHALL BE BROUGHT TO THE IMMEDIATE ATTENTION OF THE ARCHITECT/DESIGNER.
C. CONTRACTORS SHALL FIELD VERIFY CONDITIONS AND DIMENSIONS THAT IMPACT WORK PRIOR TO THE START OF CONSTRUCTION.
D. COORDINATE BLOCKING REQUIREMENTS AND LOCATIONS WITH ELEVATIONS AND DETAILS. BLOCKING TO BE FIRE TREATED.
E. DIMENSIONS ARE TO BE TO FINISHED FACE OF WALL, UNO. APPLIED MATERIALS ARE TO BE APPLIED AFTER THE FINISH DIMENSIONS HAVE BEEN CONFIRMED.
F. DRAWINGS ARE NOT TO BE SCALED. VERIFY ANY MISSING OR CONFLICTING WRITTEN DIMENSIONS WITH THE ARCHITECT/DESIGNER PRIOR TO CONSTRUCTION.
G. NOTIFY ARCHITECT OF CONDITIONS WHERE CLEAR OR CRITICAL DIMENSIONS ARE DESIGNATED BUT CANNOT BE MET OR WHERE CORRIDOR/ AISLE WIDTH CANNOT MEET THE MINIMUM REQUIREMENT.
H. PROVIDE POWER AND DATA WHERE NEEDED TO ACCOMMODATE RELOCATION OF EQUIPMENT
I. CONTRACTOR SHALL MAINTAIN BUILDING MECHANICAL CODE REQUIREMENTS FOR VENTILATION THROUGHOUT CONSTRUCTION WHILE MAINTAINING AIR DIFFUSERS, REGISTERS, GRILLES, DUCTWORK AND EQUIPMENT FREE OF DEBRIS, DUST, CONTAMINATION, AND DAMAGE. CONTRACTOR IS RESPONSIBLE FOR ALL PREVENTATIVE MAINTENANCE OF HVAC SYSTEM AND SHALL BE TURNED OVER TO OWNER IN NEW CONDITION AT THE END OF WORK. DOCUMENT ALL REQUIRED WORK AND INCLUDE MATERIAL AND LABOR COSTS IN BID.
J. CONTRACTOR TO VERIFY THE LOCATIONS OF ALL ROOF DRAINS, ROOF PENETRATIONS AND OTHER ROOF ELEMENTS NOT SHOWN IN THIS PLAN, INCLUDING BUT NOT LIMITED TO ROOF VENTS, ROOFTOP UNITS, PITCH BOXES, ETC. REFER TO MECHANICAL DRAWINGS
K. CONTRACTOR TO COORDINATE FINAL LOCATIONS OF PENETRATIONS AND DRAINS W/ ROOF INSTALLER SO THAT THE LOCATION OF THE PENETRATIONS DO NOT JEOPARDIZE THE ROOF WARRANTY.
L. NO PENETRATIONS WITHIN 12" OF PARAPET, UNO.
M. ALL SEALANTS AND WATERPROOF MASTICS TO BE COMPATIBLE WITH THE MATERIAL WHICH THEY WILL COME IN CONTACT WITH CAUSING NO DELETERIOUS EFFECTS.
N. REFER TO ELECTRICAL DRAWINGS FOR EXTERIOR LIGHTING
O. NEW CURBS FOR MECHANICAL UNITS ARE TO BE INSTALLED PER ROOFING MANUFACTURER'S REQUIREMENTS TO COMPLY WITH AND MAINTAIN ROOF WARRANTY
P. ALL TARGET ELEVATIONS ARE TAKEN FROM PROJECT FINISH FLOOR HEIGHT, 0'-0"


Bergmeyer

BOS
51 Sleeper St.
6th Floor
Boston, MA 02210
617.542.1025

LA
800 South Figueroa St.
Suite 1060
Los Angeles, CA 90017
212.337.1090

www.bergmeyer.com


CONSULTANTS:

SEAL/ SIGNATURE:

| NO. | BY | DATE | DESCRIPTION |
|---|---|---|---|
| | | 2021-01-11 | PERMIT/BID SET |
| | | 2020-12-21 | 75% SET |

SHAKE SHACK

SHAKE SHACK - LEE'S SUMMIT MO

2051 NW LOWENSTEIN DRIVE
LEE'S SUMMIT, MISSOURI 64081
SHACK #1348

PERMIT/BID SET

ROOF PLAN

| | |
|---|---|
| DRAWN BY: | CS & WQL |
| CHECKED BY: | JS |
| JOB NO: | 20068.00 |

A150


1/11/2021 6:07:55 PM C:\Users\devine\Documents\068_Shake Shack-Lee's Summit_Central_devine@bergmeyer.com.rvt

RELEASE FOR CONSTRUCTION
AS NOTED ON PLANS REVIEW
DEVELOPMENT SERVICES
LEE'S SUMMIT, MISSOURI
03/10/2021

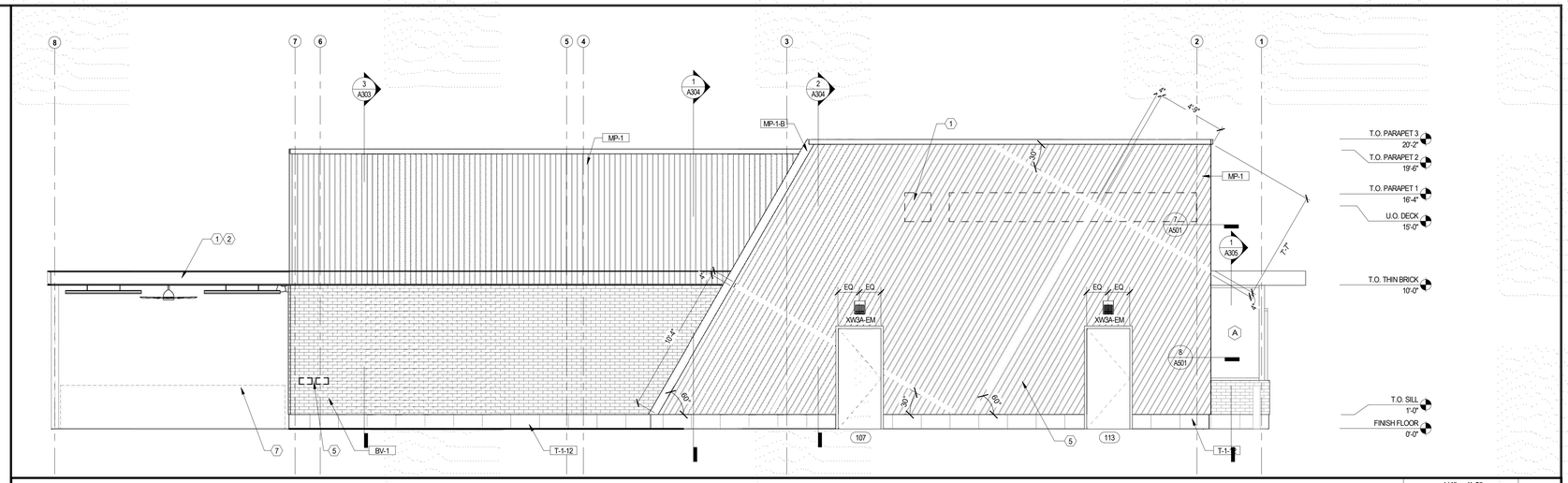


EXTERIOR ELEVATION 1/4" = 1'-0" 4

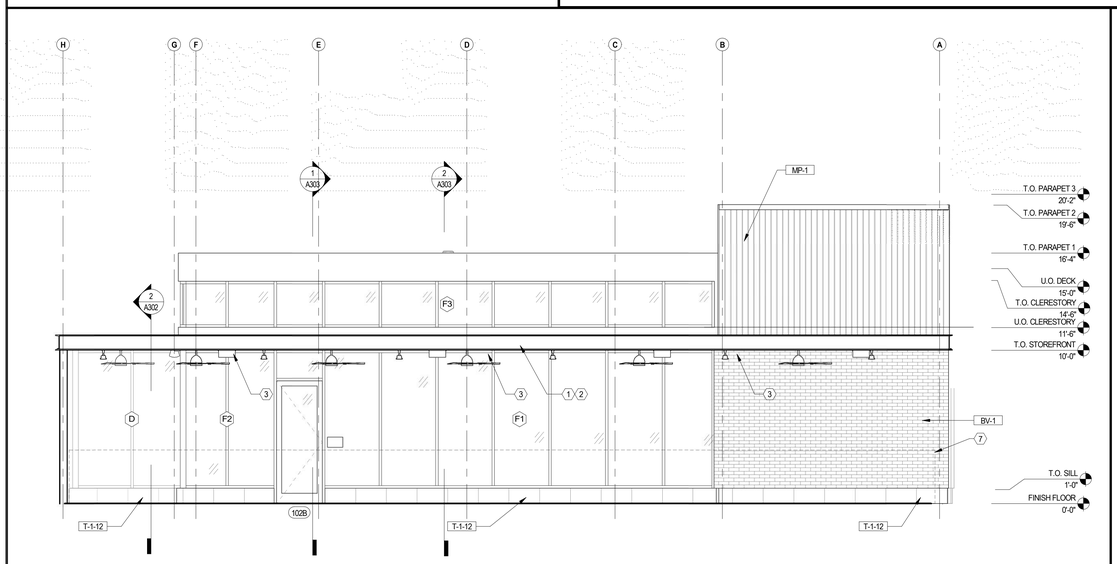


EXTERIOR ELEVATION 1/4" = 1'-0" 3

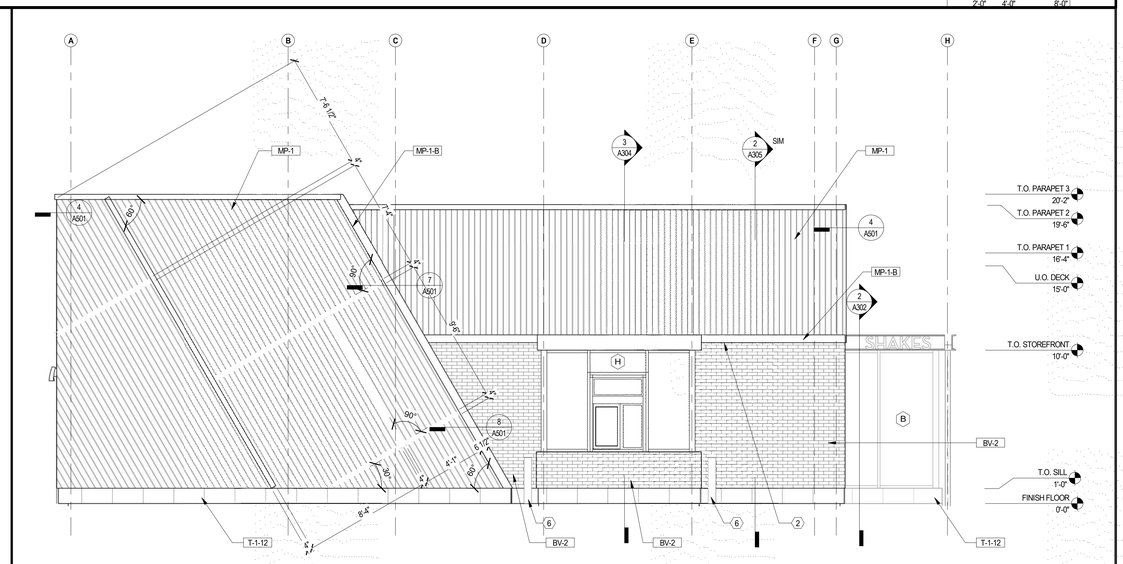


EXTERIOR ELEVATION 1/4" = 1'-0" 2

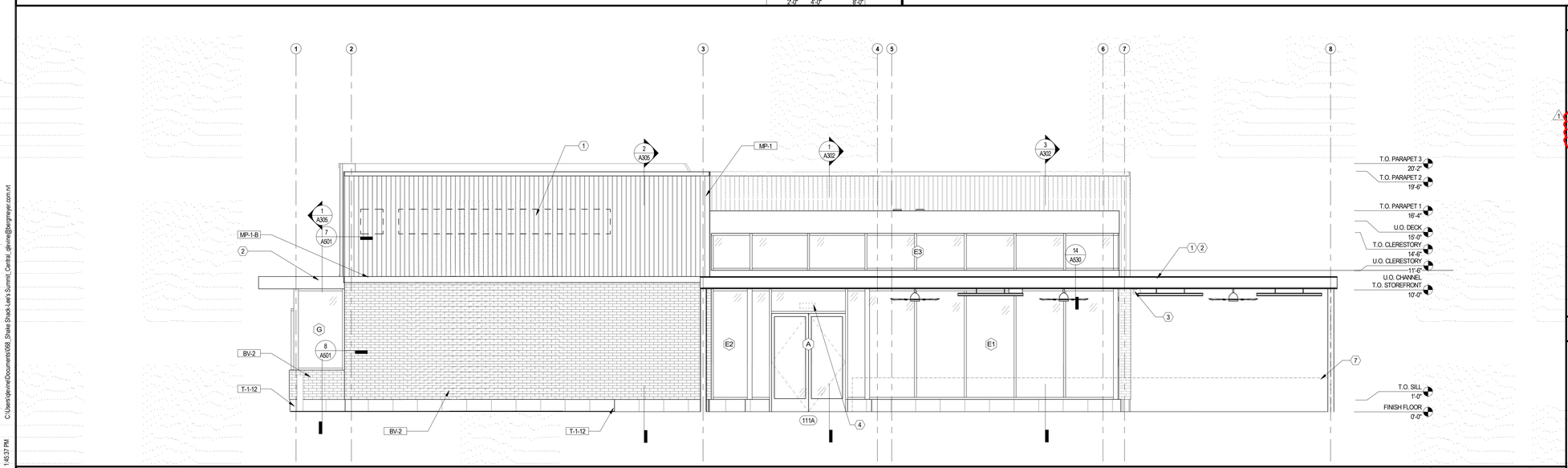


EXTERIOR ELEVATION 1/4" = 1'-0" 1

## KEYNOTES

1. SIGNAGE BY OWNER'S SIGNAGE CONTRACTOR, GC. TO PROVIDE POWER & BLOCKING AS REQUIRED. SIGNAGE WILL BE SUBMITTED UNDER SEPARATE PERMIT
2. EXTERIOR OPEN CANOPY PAINTED P-4
3. SURFACE MOUNTED SPEAKERS. REFER TO REFLECTED CEILING PLAN AND MEPFP FOR MORE INFORMATION. SPEAKER COLOR TO BE BLACK
4. WHITE VINYL ADDRESS SIGN APPLIED TO THE INTERIOR FACE OF TRANSOM WINDOW. SIGNAGE BY OWNER'S SIGNAGE CONTRACTOR AND WILL BE SUBMITTED UNDER SEPARATE PERMIT. 4" MIN HEIGHT W/ .5" MIN STROKE
5. APPROXIMATE LOCATION OF RTI AND CO2 FILL BOXES. REFER TO A100 AND K-SHEETS FOR MORE INFORMATION. COORDINATE FINAL LOCATION WITH OWNER'S VENDOR AND SHAKE SHACK.
6. BOLLARDS; REFER TO CIVIL
7. PATIO RAILING; REFER TO AS102

## GENERAL NOTES

A. ALL TARGET ELEVATIONS ARE TAKEN IN RELATION TO PROJECT +/-0'-0"
B. GC TO COORDINATE ALL EXTERIOR SECURITY CAMERA LOCATIONS WITH OWNER.
C. GC TO COORDINATE ALL UTILITY CONNECTIONS AND METER LOCATIONS WITH MEP & CIVIL DRAWINGS. UTILITIES SHOWN ON ARCHITECT'S EXTERIOR ELEVATIONS ARE FOR REFERENCE ONLY.


Bergmeyer
www.bergmeyer.com
LA - 800 South Figueroa St. Suite 1080 Los Angeles, CA 90017 212.337.1090
BOS - 51 Sleeper St. 6th Floor Boston, MA 02210 617.542.1025


CONSULTANTS:

SEAL/ SIGNATURE:

| NO. | BY | DATE | DESCRIPTION |
|---|---|---|---|
| 1 | | 2021-03-09 | ADDENDUM 1 |
| | | 2021-01-11 | PERMIT/BID SET |
| | | 2020-12-21 | 75% SET |
| | | 2020-10-12 | DD SET |

SHAKE SHACK

SHAKE SHACK - LEE'S SUMMIT MO

2051 NW LOWENSTEIN DRIVE
LEE'S SUMMIT, MISSOURI 64081
SHACK #1348

PERMIT/BID SET

EXTERIOR ELEVATIONS

| | |
|---|---|
| DRAWN BY: | CS & WQL |
| CHECKED BY: | JS |
| JOB NO: | 20068.00 |

A201


3/9/2021 1:45:37 PM C:\Users\djevine\Documents\068_Shake Shack-Lee's Summit_Central_djevine@bergmeyer.com.rvt

RELEASE FOR CONSTRUCTION
AS NOTED ON PLANS REVIEW
DEVELOPMENT SERVICES
LEE'S SUMMIT, MISSOURI
03/10/2021

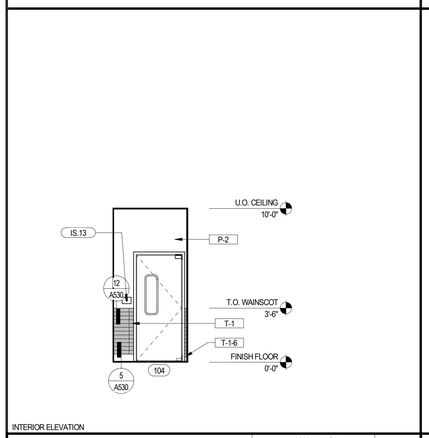


INTERIOR ELEVATION

**ELEVATION** 1/4" = 1'-0" (2'-0" 4'-0" 8'-0") **11**

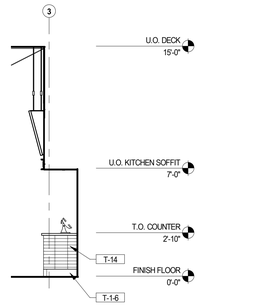


AT CONDIMENT COUNTER SHORT WALL

**ELEVATION** 1/4" = 1'-0" (2'-0" 4'-0" 8'-0") **16**

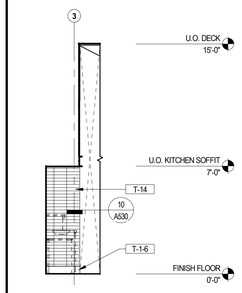


AT CONDIMENT COUNTER

**ELEVATION** 1/4" = 1'-0" (2'-0" 4'-0" 8'-0") **15**

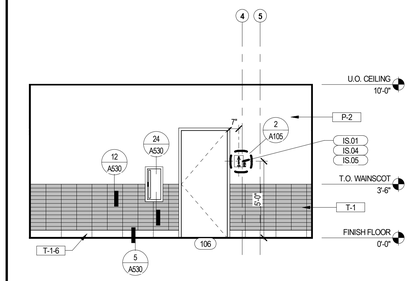


**INTERIOR ELEVATION** 1/4" = 1'-0" (2'-0" 4'-0" 8'-0") **14**

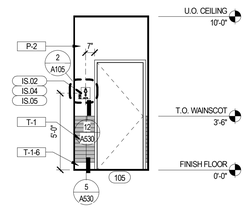


**INTERIOR ELEVATION** 1/4" = 1'-0" (2'-0" 4'-0" 8'-0") **13**

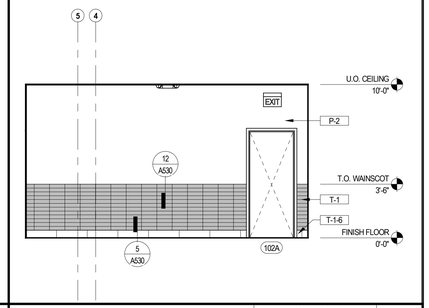


**INTERIOR ELEVATION** 1/4" = 1'-0" (2'-0" 4'-0" 8'-0") **12**

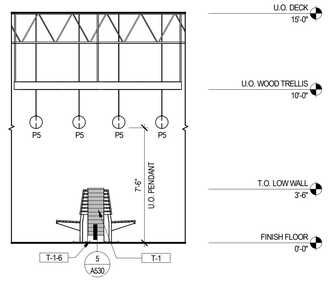


**INTERIOR ELEVATION** 1/4" = 1'-0" (2'-0" 4'-0" 8'-0") **10**

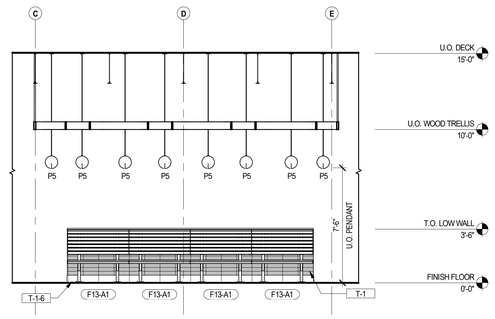


**INTERIOR ELEVATION** 1/4" = 1'-0" (2'-0" 4'-0" 8'-0") **9**

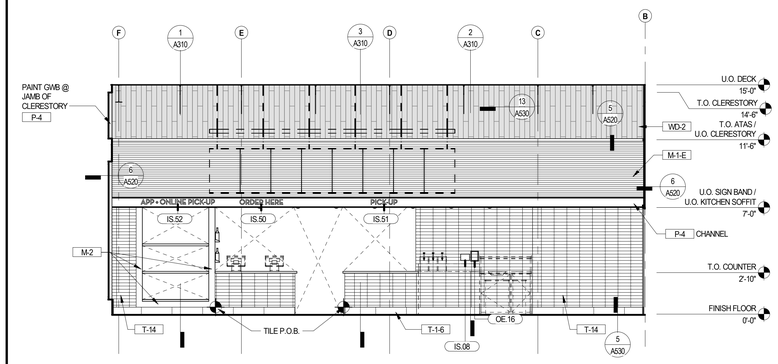


**INTERIOR ELEVATION** 1/4" = 1'-0" (2'-0" 4'-0" 8'-0") **8**

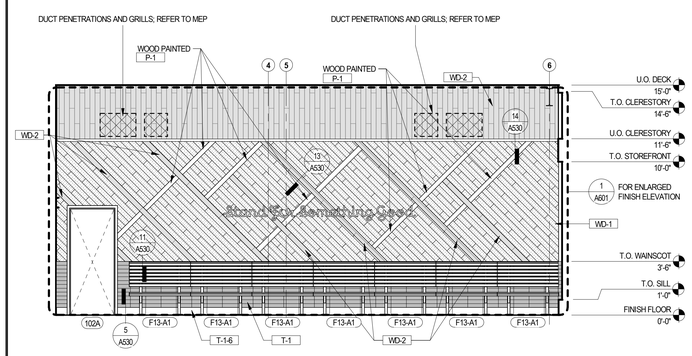


**INTERIOR ELEVATION** 1/4" = 1'-0" (2'-0" 4'-0" 8'-0") **7**

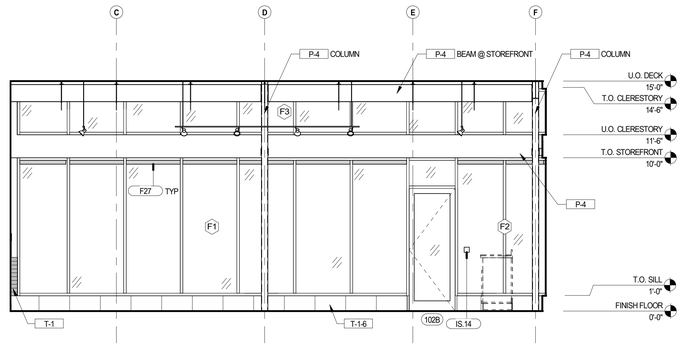


**INTERIOR ELEVATION** 1/4" = 1'-0" (2'-0" 4'-0" 8'-0") **6**

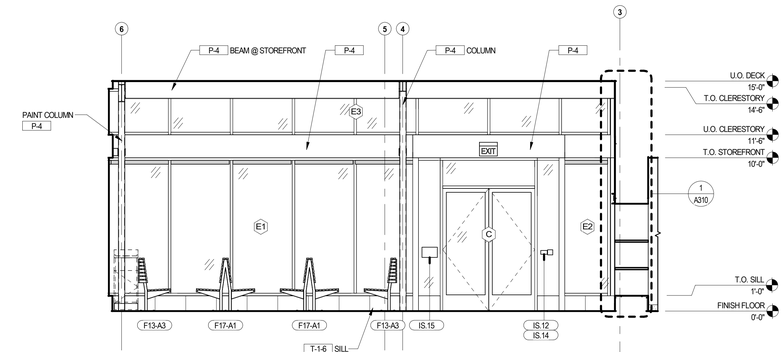


**INTERIOR ELEVATION** 1/4" = 1'-0" (2'-0" 4'-0" 8'-0") **5**

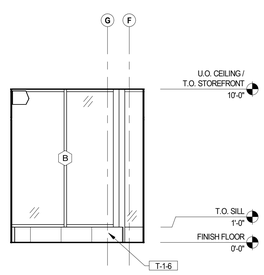


**INTERIOR ELEVATION** 1/4" = 1'-0" (2'-0" 4'-0" 8'-0") **4**

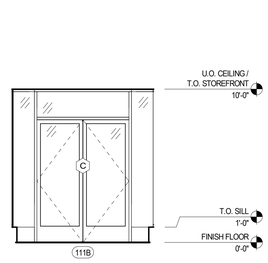


**INTERIOR ELEVATION** 1/4" = 1'-0" (2'-0" 4'-0" 8'-0") **3**

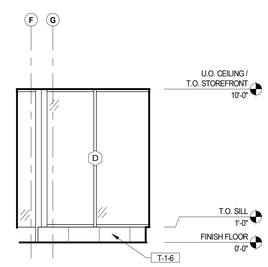


**INTERIOR ELEVATION** 1/4" = 1'-0" (2'-0" 4'-0" 8'-0") **2**

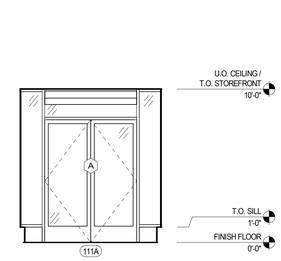


**INTERIOR ELEVATION** 1/4" = 1'-0" (2'-0" 4'-0" 8'-0") **1**

## GENERAL NOTES

A. REFER TO THE REFLECTED CEILING PLAN, FLOOR FINISH PLAN AND FINISH SCHEDULE FOR ADDITIONAL FINISH INFORMATION
B. ALL DIMENSIONS ARE TAKEN FROM TOP OF FINISH FLOOR
C. PROVIDE REQUIRED BLOCKING FOR ALL WALL MOUNTED FIXTURES, INCLUDING SHELVING, CABINETS, MENU BOARDS, WINE RACKS, & WALL MOUNTED LIGHT FIXTURES.
D. **ALL VISIBLE ELECTRICAL SWITCHES, OUTLETS, COVER PLATES, ETC. TO MATCH ADJACENT FINISH. CONFIRM WITH ARCHITECT.**
E. DIFFUSERS, RETURNS, AND ANY CEILING OR SOFFIT ELECTRICAL / MECHANICAL EQUIPMENT TRIMS/ PLATES TO BE PAINTED TO MATCH ADJACENT CEILING/SOFFIT COLOR
F. LIGHT TRIM RING FINISHES ARE TO BE PAINTED TO MATCH ADJACENT CEILING / SOFFIT COLOR
G. INTERIOR PAINT COLORS, WOOD TRIM & WOOD WALL PANELING PATTERNS TO BE FINALIZED BY DESIGNER, TYP.
H. **PAINT ALL GWB ON F.O.H WALLS P-2, UNLESS NOTED OTHERWISE ON ELEVATIONS; CONFIRM WITH ARCHITECT**
I. KITCHEN EQUIPMENT SHOWN IN HALFTONE FOR REFERENCE ONLY. REFER TO K-SHEETS FOR ADDITIONAL INFORMATION.
J. ACOUSTICAL CEILING INSULATION TO BE INSTALLED BELOW STRUCTURAL DECKING IN ALL AREAS WITH EXPOSED DECK.

Bergmeyer
LA - 800 South Figueroa St. Suite 1060 Los Angeles, CA 90017 212.337.1090
BOS - 51 Sleeper St. 6th Floor Boston, MA 02210 617.542.1025
www.bergmeyer.com

CONSULTANTS:

SEAL/ SIGNATURE:

| NO. | BY | DATE | DESCRIPTION |
|---|---|---|---|
| | | 2021-01-11 | PERMIT/BID SET |
| | | 2020-12-21 | 75% SET |
| | | 2020-10-12 | DD SET |

SHAKE SHACK

SHAKE SHACK - LEE'S SUMMIT MO

2051 NW LOWENSTEIN DRIVE
LEE'S SUMMIT, MISSOURI 64081
SHACK #1348

PERMIT/BID SET

INTERIOR ELEVATIONS

DRAWN BY: CS & WQL
CHECKED BY: JS
JOB NO: 20068.00

A210

1/11/2021 6:07:25 PM C:\Users\djevine\Documents\068_Shake Shack Lee's Summit_Central_djevine@bergmeyer.com.rvt

RELEASE FOR CONSTRUCTION
AS NOTED ON PLANS REVIEW
DEVELOPMENT SERVICES
LEE'S SUMMIT, MISSOURI
03/10/2021

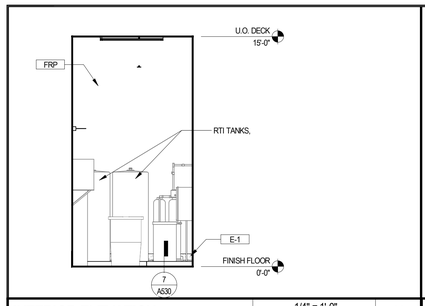


INTERIOR ELEVATION 1/4" = 1'-0" 19

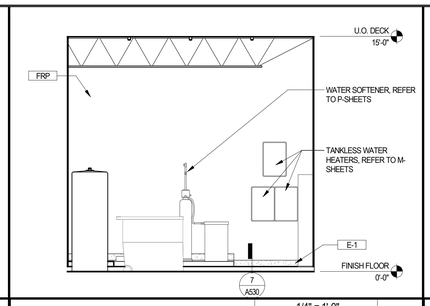


INTERIOR ELEVATION 1/4" = 1'-0" 18

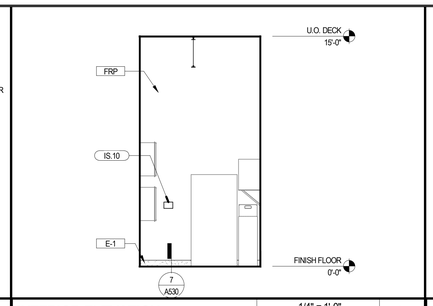


INTERIOR ELEVATION 1/4" = 1'-0" 17

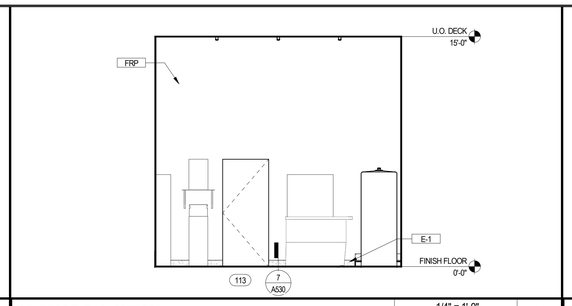


INTERIOR ELEVATION 1/4" = 1'-0" 16

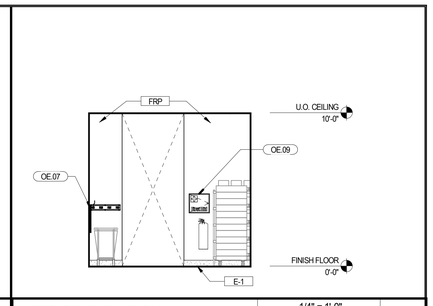


INTERIOR ELEVATION 1/4" = 1'-0" 15

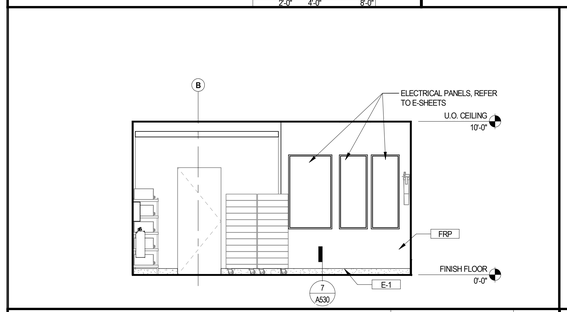


INTERIOR ELEVATION 1/4" = 1'-0" 14

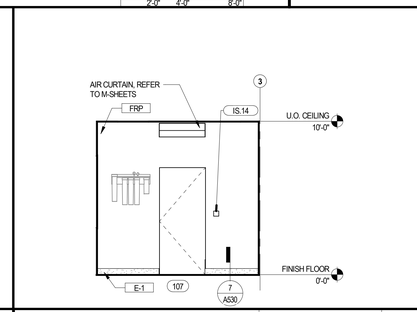


INT ELEV 1/4" = 1'-0" 13

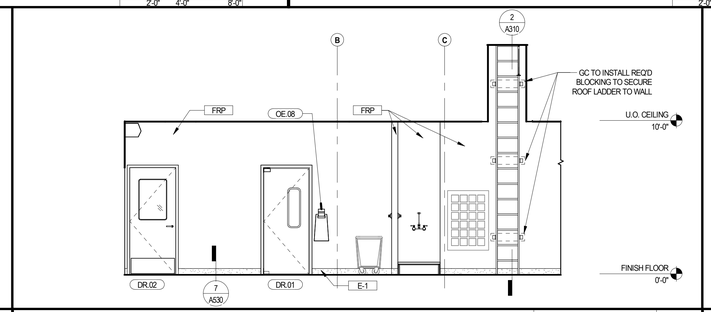


INTERIOR ELEVATION 1/4" = 1'-0" 12

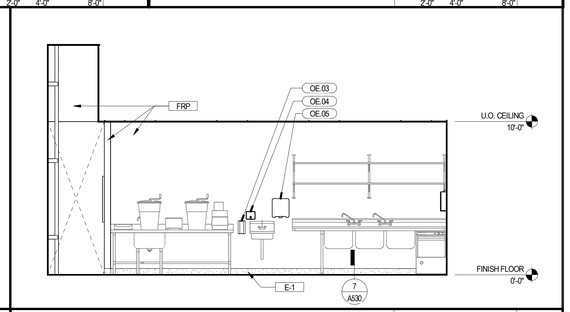


INTERIOR ELEVATION 1/4" = 1'-0" 11

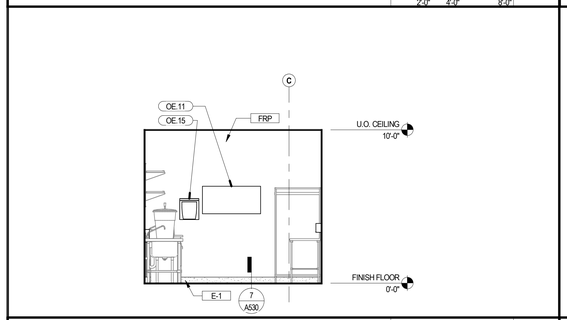


INTERIOR ELEVATION 1/4" = 1'-0" 10

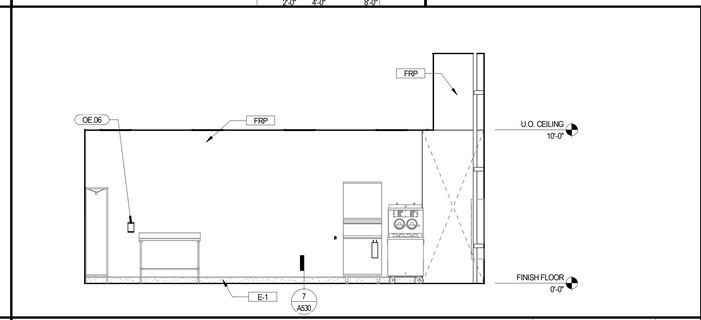


INTERIOR ELEVATION 1/4" = 1'-0" 9

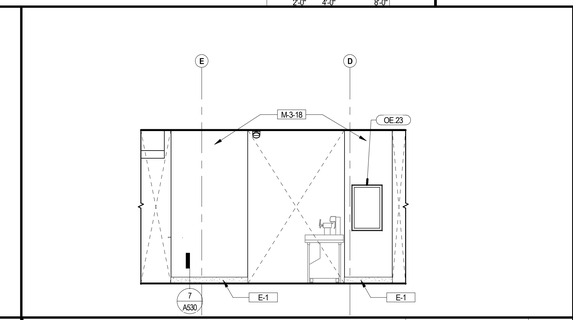


INTERIOR ELEVATION 1/4" = 1'-0" 8

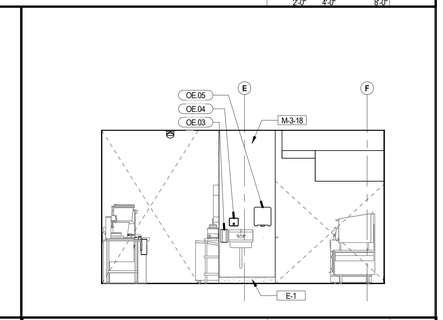


INTERIOR ELEVATION 1/4" = 1'-0" 7

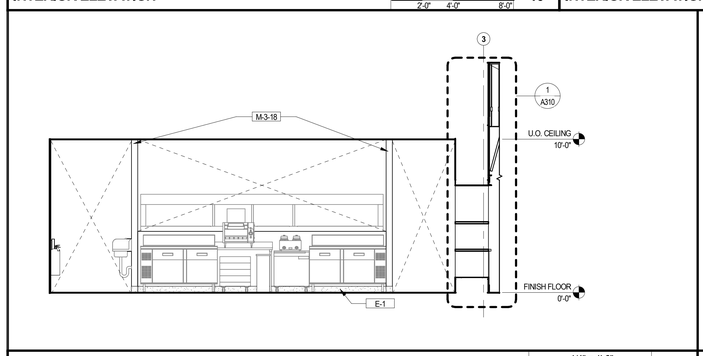


INTERIOR ELEVATION 1/4" = 1'-0" 6

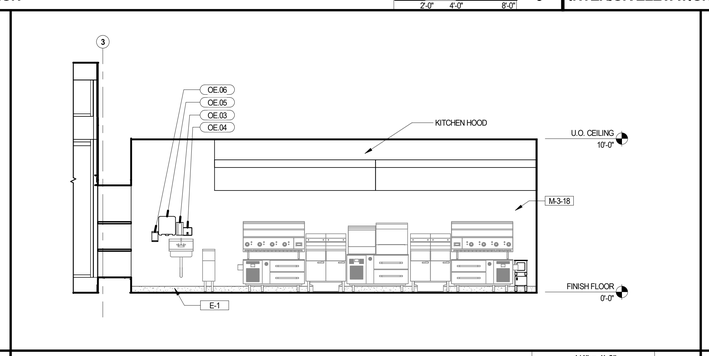


INTERIOR ELEVATION 1/4" = 1'-0" 5

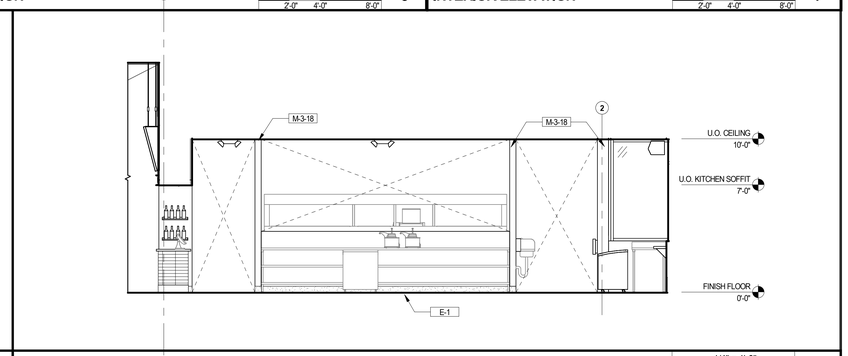


INTERIOR ELEVATION 1/4" = 1'-0" 4

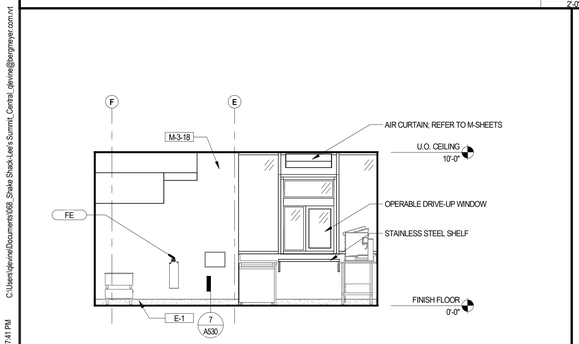


INTERIOR ELEVATION 1/4" = 1'-0" 3

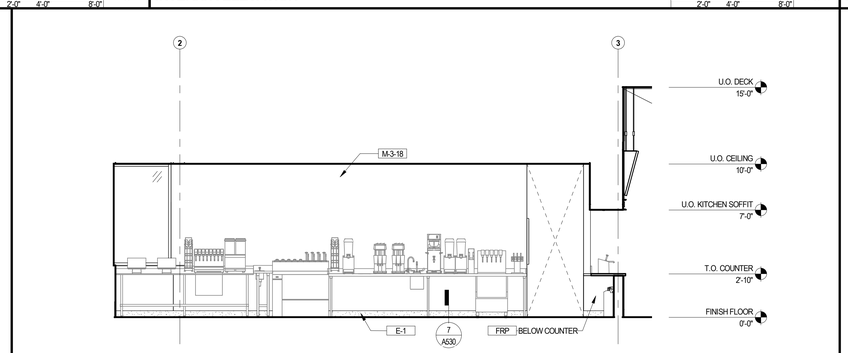


INTERIOR ELEVATION 1/4" = 1'-0" 2

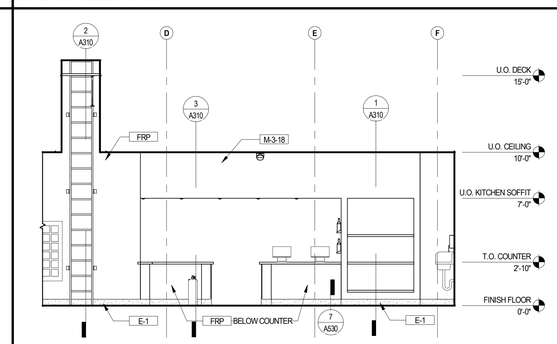


INTERIOR ELEVATION 1/4" = 1'-0" 1

## GENERAL NOTES

A. REFER TO THE REFLECTED CEILING PLAN, FLOOR FINISH PLAN AND FINISH SCHEDULE FOR ADDITIONAL FINISH INFORMATION
B. ALL DIMENSIONS ARE TAKEN FROM TOP OF FINISH FLOOR
C. PROVIDE REQUIRED BLOCKING FOR ALL WALL MOUNTED FIXTURES, INCLUDING SHELVING, CABINETS, MENU BOARDS, WINE RACKS, & WALL MOUNTED LIGHT FIXTURES
D. **ALL VISIBLE ELECTRICAL SWITCHES, OUTLETS, COVER PLATES, ETC. TO MATCH ADJACENT FINISH. CONFIRM WITH ARCHITECT.**
E. DIFFUSERS, RETURNS, AND ANY CEILING OR SOFFIT ELECTRICAL / MECHANICAL EQUIPMENT TRIMS/ PLATES TO BE PAINTED TO MATCH ADJACENT CEILING/SOFFIT COLOR
F. LIGHT TRIM RING FINISHES ARE TO BE PAINTED TO MATCH ADJACENT CEILING / SOFFIT COLOR
G. INTERIOR PAINT COLORS, WOOD TRIM & WOOD WALL PANELING PATTERNS TO BE FINALIZED BY DESIGNER, TYP.
H. **PAINT ALL GWB ON F.O.H WALLS P-2, UNLESS NOTED OTHERWISE ON ELEVATIONS; CONFIRM WITH ARCHITECT**
I. KITCHEN EQUIPMENT SHOWN IN HALFTONE FOR REFERENCE ONLY. REFER TO K-SHEETS FOR ADDITIONAL INFORMATION.
J. ACOUSTICAL CEILING INSULATION TO BE INSTALLED BELOW STRUCTURAL DECKING IN ALL AREAS WITH EXPOSED DECK.

Bergmeyer
LA - 800 South Figueroa St. Suite 1060 Los Angeles, CA 90017 212.337.1090
BOS - 51 Sleeper St. 6th Floor Boston, MA 02210 617.542.1025
www.bergmeyer.com

CONSULTANTS:

SEAL/ SIGNATURE:

| NO. | BY | DATE | DESCRIPTION |
|---|---|---|---|
| | | 2021-01-11 | PERMIT/BID SET |
| | | 2020-12-21 | 75% SET |
| | | 2020-10-12 | DD SET |

SHAKE SHACK

SHAKE SHACK - LEE'S SUMMIT MO

2051 NW LOWENSTEIN DRIVE
LEE'S SUMMIT, MISSOURI 64081
SHACK #1348

PERMIT/BID SET

INTERIOR ELEVATIONS

DRAWN BY: CS & WQL
CHECKED BY: JS
JOB NO: 20068.00

A211

1/11/2021 6:07:41 PM C:\Users\jdevine2\Documents\008_Shake Shack-Lee's Summit_Central_jdevine@bergmeyer.com.rvt

RELEASE FOR CONSTRUCTION
AS NOTED ON PLANS REVIEW
DEVELOPMENT SERVICES
LEE'S SUMMIT, MISSOURI

03/10/2021

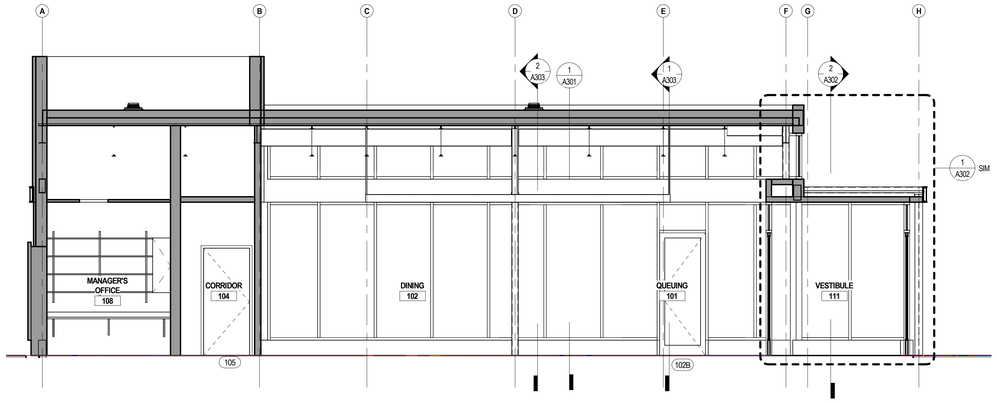


**BUILDING SECTION - NORTH SOUTH**

1/4" = 1'-0"
2'-0" 4'-0" 8'-0"

2

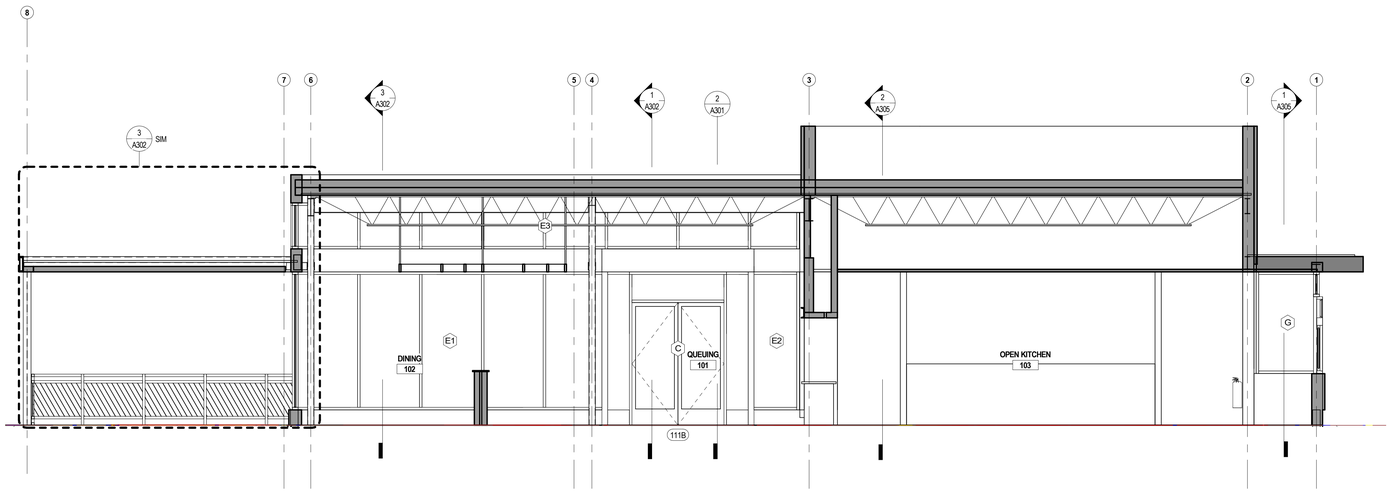


**BUILDING SECTION - EAST WEST**

1/4" = 1'-0"
2'-0" 4'-0" 8'-0"

1

Bergmeyer

BOS
-
51 Sleeper St.
6th Floor
Boston, MA 02210
617.542.1025

LA
-
800 South Figueroa St.
Suite 1080
Los Angeles, CA 90017
212.337.1090

www.bergmeyer.com

CONSULTANTS:

SEAL/ SIGNATURE:

| NO. | BY | DATE | DESCRIPTION |
|---|---|---|---|
| | | 2021-01-11 | PERMIT/BID SET |
| | | 2020-12-21 | 75% SET |

SHAKE SHACK

SHAKE SHACK - LEE'S SUMMIT MO

2051 NW LOWENSTEIN DRIVE
LEE'S SUMMIT, MISSOURI 64081
SHACK #1348

PERMIT/BID SET

BUILDING SECTIONS

| | |
|---|---|
| DRAWN BY: | CS & WQL |
| CHECKED BY: | JS |
| JOB NO: | 20068.00 |

A301

1/11/2021 6:07:44 PM C:\Users\jdevine\Documents\088_Shake Shack-Lee's Summit_Central_jdevine@bergmeyer.com.rvt

RELEASE FOR CONSTRUCTION
AS NOTED ON PLANS REVIEW
DEVELOPMENT SERVICES
LEE'S SUMMIT, MISSOURI
03/10/2021

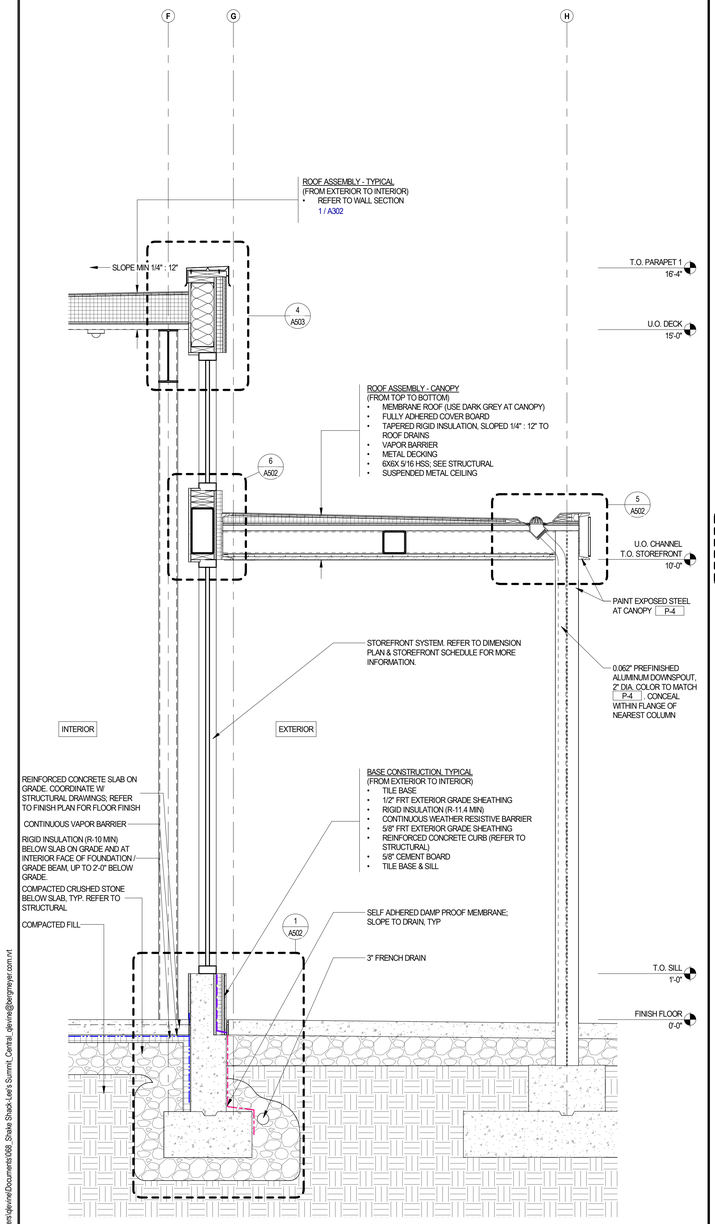


## EXTERIOR WALL SECTION 3 - STOREFRONT AND CANOPY

3/4" = 1'-0" (6" 1'-0" 2'-0") — 3

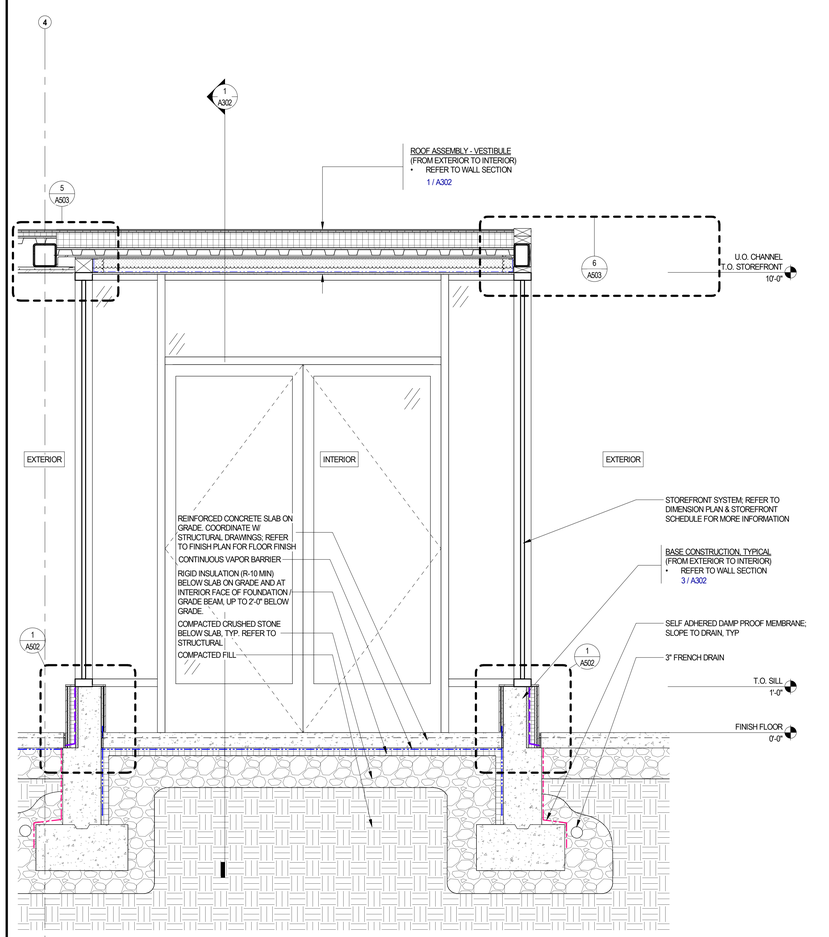


## EXTERIOR WALL SECTION 2 - VESTIBULE WALL

3/4" = 1'-0" (6" 1'-0" 2'-0") — 2

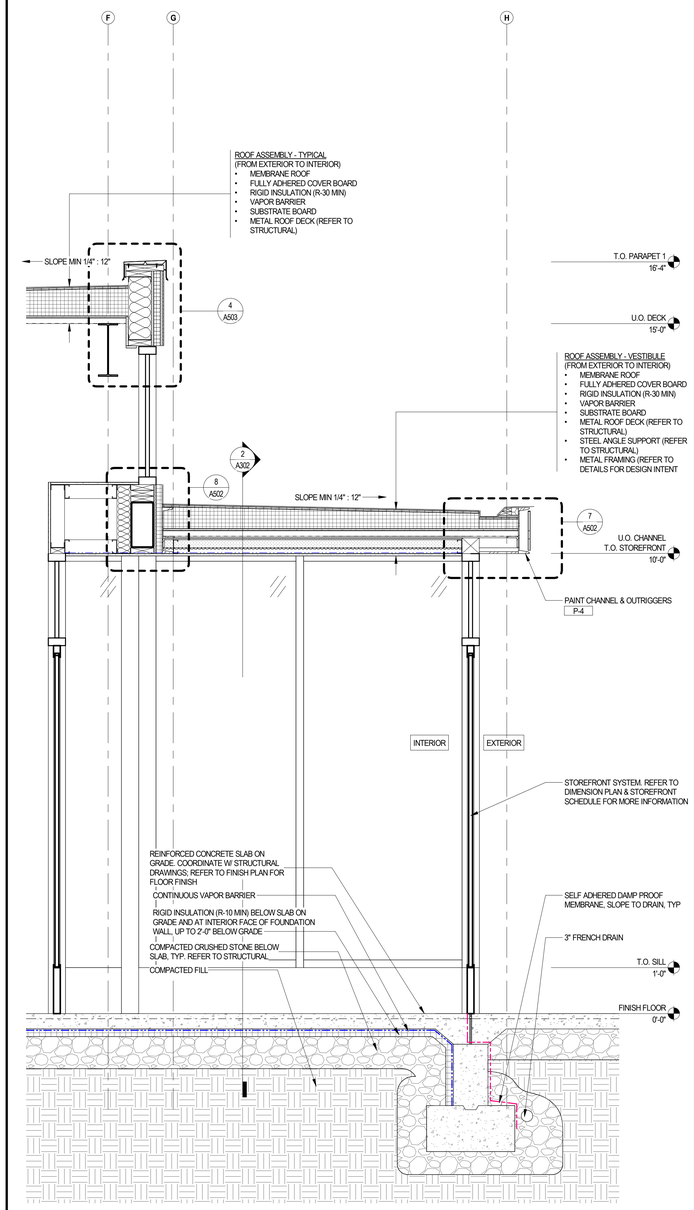


## EXTERIOR WALL SECTION 1 - VESTIBULE

3/4" = 1'-0" (6" 1'-0" 2'-0") — 1


Bergmeyer
BOS - 51 Sleeper St. 6th Floor Boston, MA 02210 617.542.1025
LA - 800 South Figueroa St. Suite 1060 Los Angeles, CA 90017 212.337.1090
www.bergmeyer.com


CONSULTANTS:

SEAL/ SIGNATURE:

| NO. | BY | DATE | DESCRIPTION |
|---|---|---|---|
| | | 2021-01-11 | PERMIT/BID SET |
| | | 2020-12-21 | 75% SET |

SHAKE SHACK

SHAKE SHACK - LEE'S SUMMIT MO

2051 NW LOWENSTEIN DRIVE
LEE'S SUMMIT, MISSOURI 64081
SHACK #1348

PERMIT/BID SET

EXTERIOR WALL SECTIONS

DRAWN BY: CS & WQL
CHECKED BY: JS
JOB NO: 20068.00

A302


1/11/2021 5:07:47 PM C:\Users\devine\Documents\068_Shake Shack-Lee's Summit_Central_devine@bergmeyer.com.rvt

RELEASE FOR CONSTRUCTION
AS NOTED ON PLANS REVIEW
DEVELOPMENT SERVICES
LEE'S SUMMIT, MISSOURI
03/10/2021

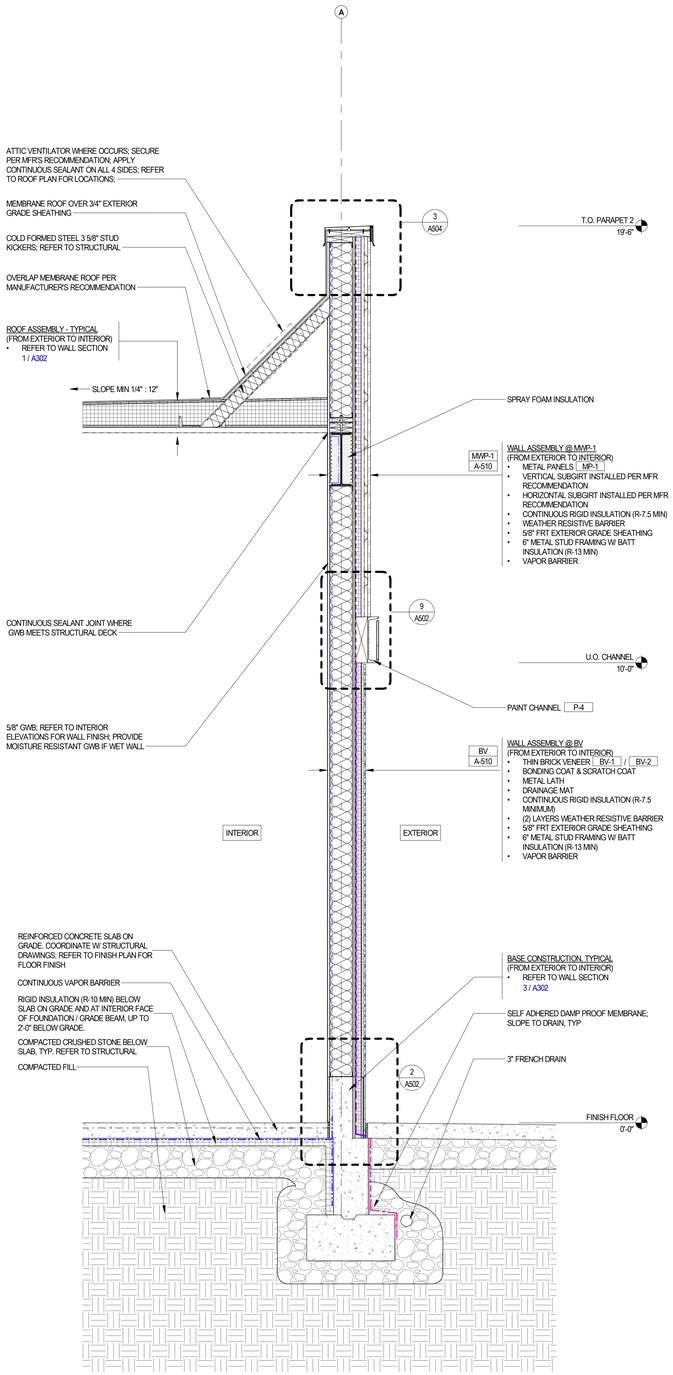


**EXTERIOR WALL SECTION 6 - THIN BRICK** 3/4" = 1'-0" (6" 1'-0" 2'-0") **3**

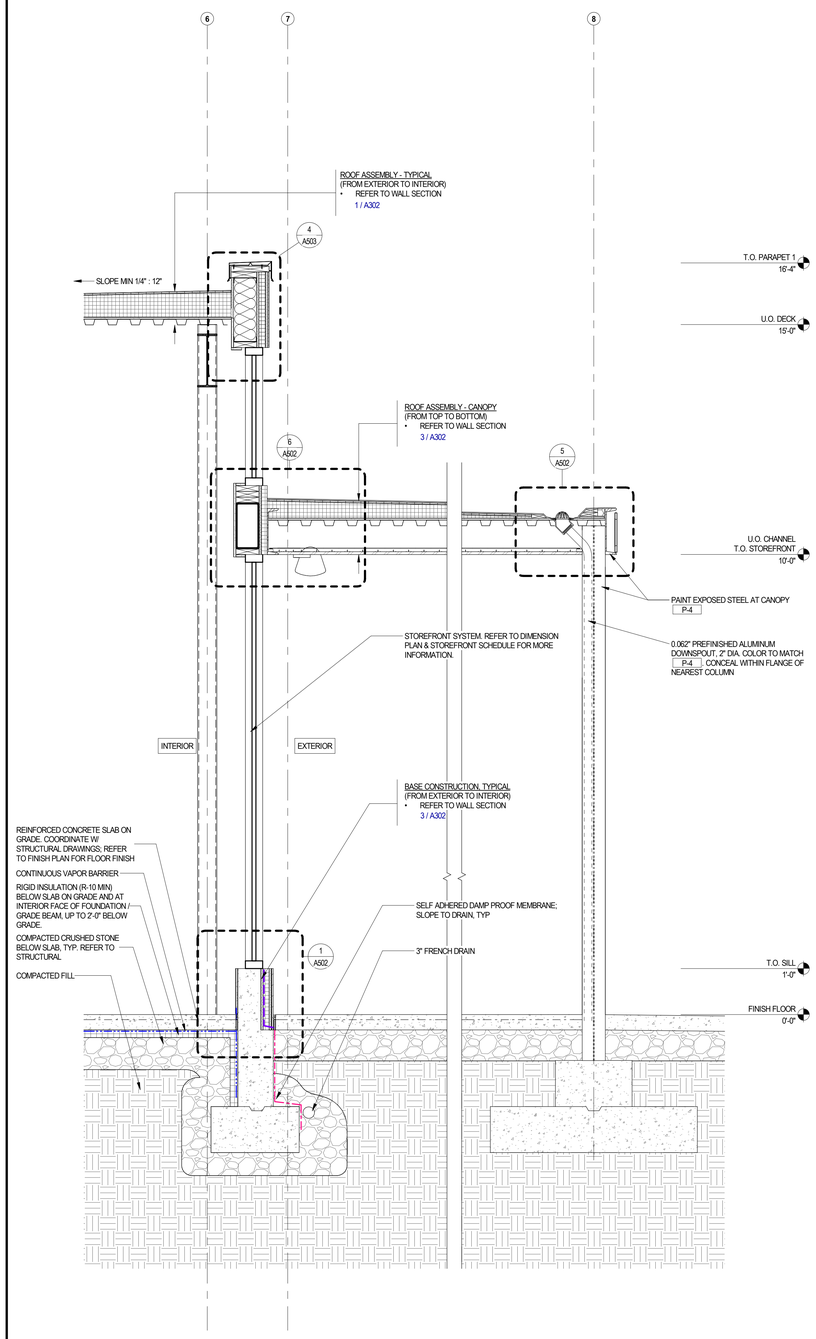


**EXTERIOR WALL SECTION 5 - STOREFRONT WALL AT PATIO** 3/4" = 1'-0" (6" 1'-0" 2'-0") **2**

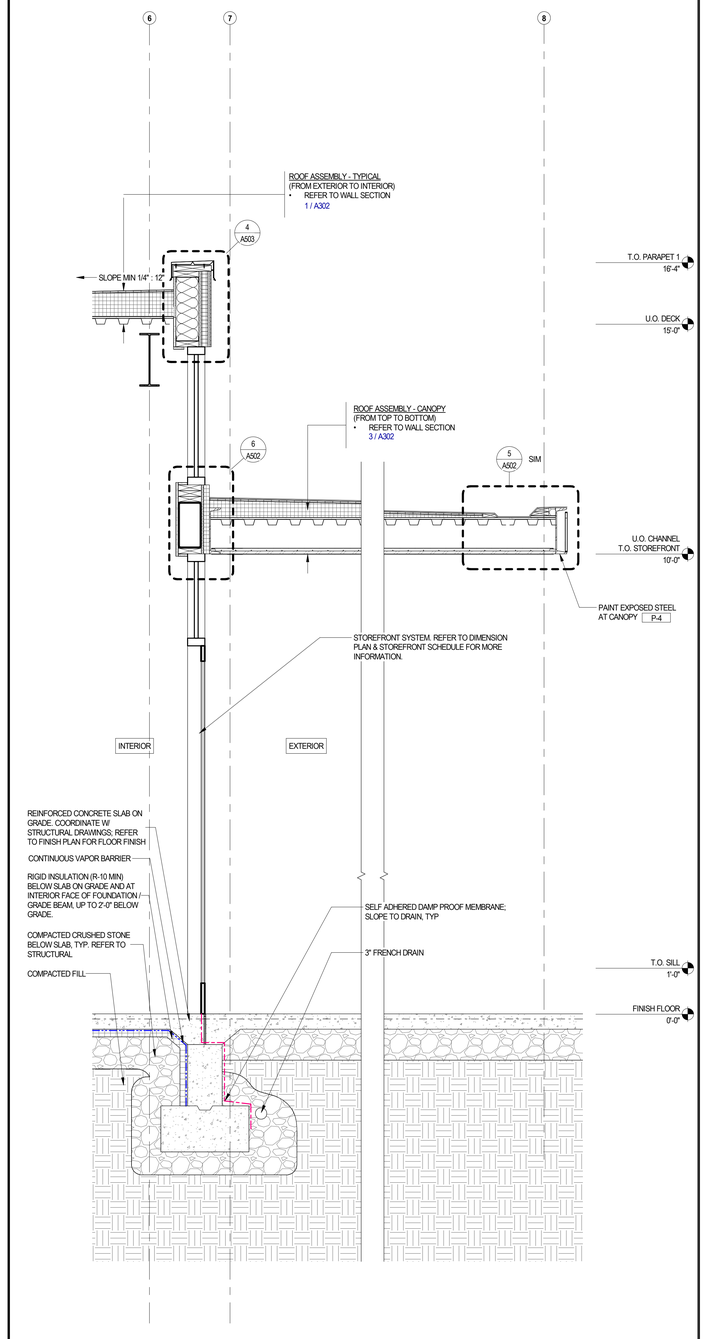


**EXTERIOR WALL SECTION 4 - STOREFRONT WALL AT DOOR** 3/4" = 1'-0" (6" 1'-0" 2'-0") **1**


Bergmeyer
BOS
51 Sleeper St.
6th Floor
Boston, MA 02210
617.542.1025
LA
800 South Figueroa St.
Suite 1060
Los Angeles, CA 90017
212.337.1090
www.bergmeyer.com


CONSULTANTS:

SEAL/ SIGNATURE:

| NO. | BY | DATE | DESCRIPTION |
|---|---|---|---|
| | | 2021-01-11 | PERMIT/BID SET |
| | | 2020-12-21 | 75% SET |

SHAKE SHACK

SHAKE SHACK - LEE'S SUMMIT MO

2051 NW LOWENSTEIN DRIVE
LEE'S SUMMIT, MISSOURI 64081
SHACK #1348

PERMIT/BID SET

EXTERIOR WALL SECTIONS

| | |
|---|---|
| DRAWN BY: | CS & WQL |
| CHECKED BY: | JS |
| JOB NO: | 20068.00 |

A303


1/11/2021 6:07:50 PM C:\Users\jdevine\Documents\008_Shake Shack Lee's Summit_Central_jdevine@bergmeyer.com.rvt

RELEASE FOR CONSTRUCTION
AS NOTED ON PLANS REVIEW
DEVELOPMENT SERVICES
LEE'S SUMMIT, MISSOURI
03/10/2021

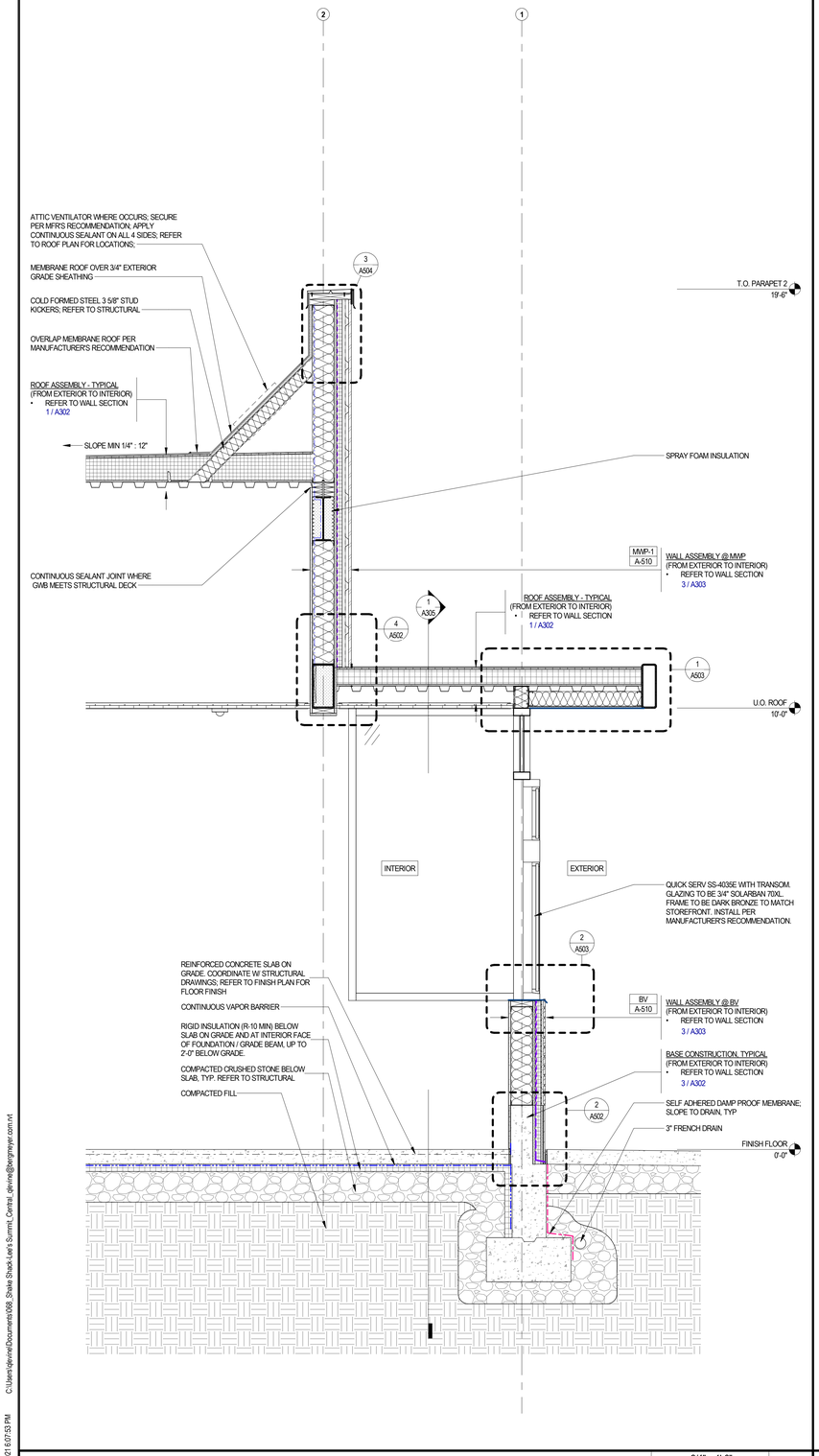


## EXTERIOR WALL SECTION 8 - DRIVE THRU WINDOW

3/4" = 1'-0"

3

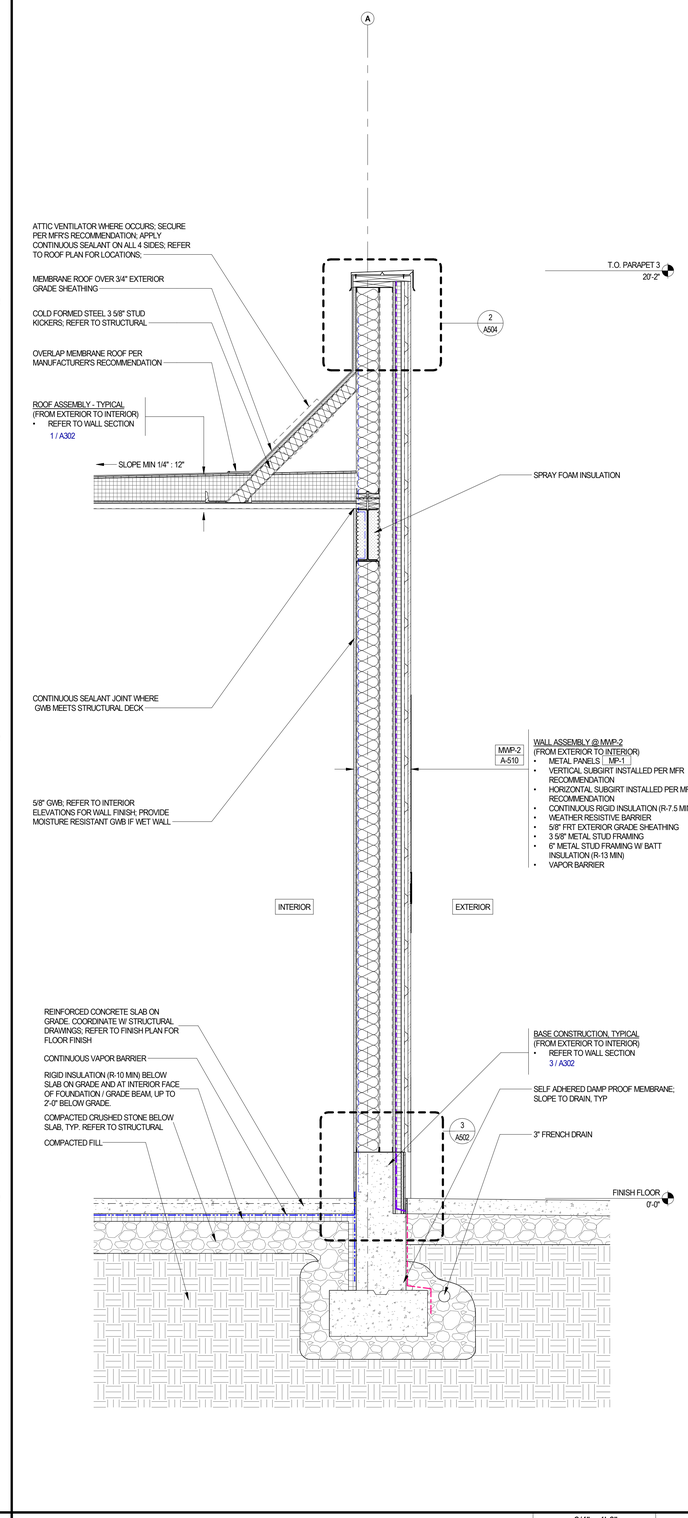


## EXTERIOR WALL SECTION 7 - METAL PANEL HIGH WALL

3/4" = 1'-0"

2

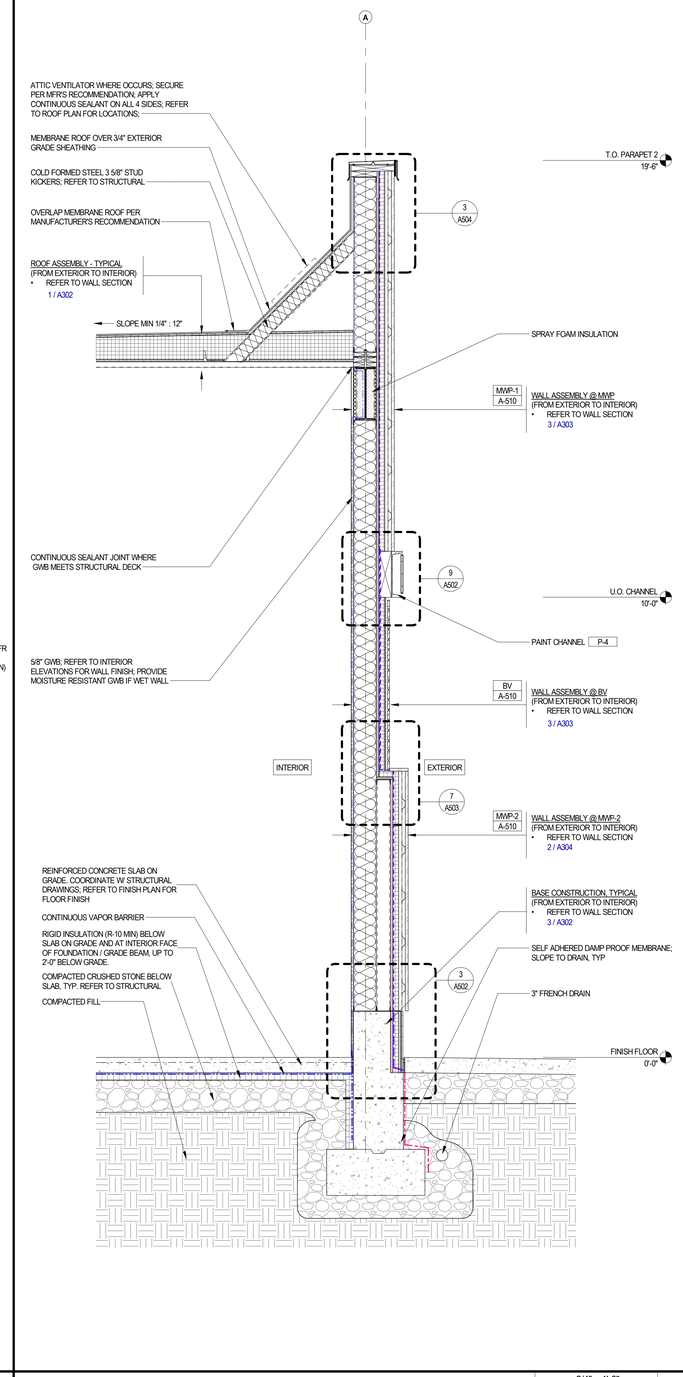


## EXTERIOR WALL SECTION - ANGLED MWP

3/4" = 1'-0"

1


Bergmeyer
BOS
51 Sleeper St.
6th Floor
Boston, MA 02210
617.542.1025
LA
800 South Figueroa St.
Suite 1080
Los Angeles, CA 90017
212.337.1090
www.bergmeyer.com


CONSULTANTS:

SEAL/ SIGNATURE:

| NO. | BY | DATE | DESCRIPTION |
|---|---|---|---|
| | | 2021-01-11 | PERMIT/BID SET |

SHAKE SHACK

SHAKE SHACK - LEE'S SUMMIT MO

2051 NW LOWENSTEIN DRIVE
LEE'S SUMMIT, MISSOURI 64081
SHACK #1348

PERMIT/BID SET

EXTERIOR WALL SECTIONS

DRAWN BY: CS & WQL
CHECKED BY: JS
JOB NO: 20068.00

A304


1/11/2021 6:07:33 PM C:\Users\jdevine\Documents\068_Shake Shack-Lee's Summit_Central_jdevine@bergmeyer.com.rvt

RELEASE FOR CONSTRUCTION
AS NOTED ON PLANS REVIEW
DEVELOPMENT SERVICES
LEE'S SUMMIT, MISSOURI
03/10/2021

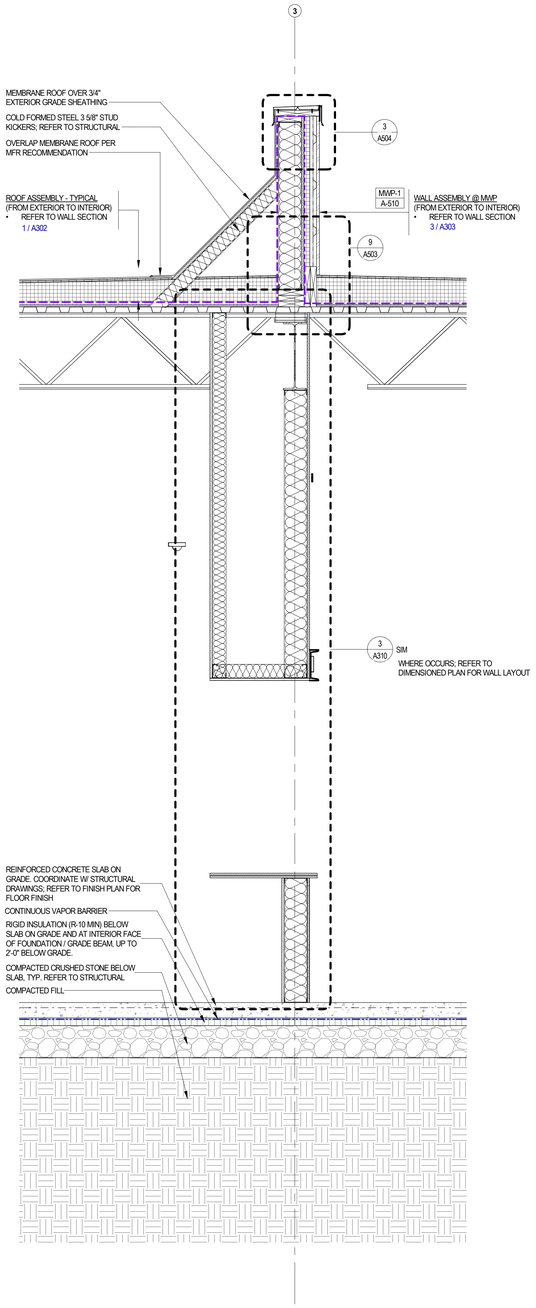


## EXTERIOR WALL SECTION - INNER PARAPET

3/4" = 1'-0" (6" 1'-0" 2'-0")

3

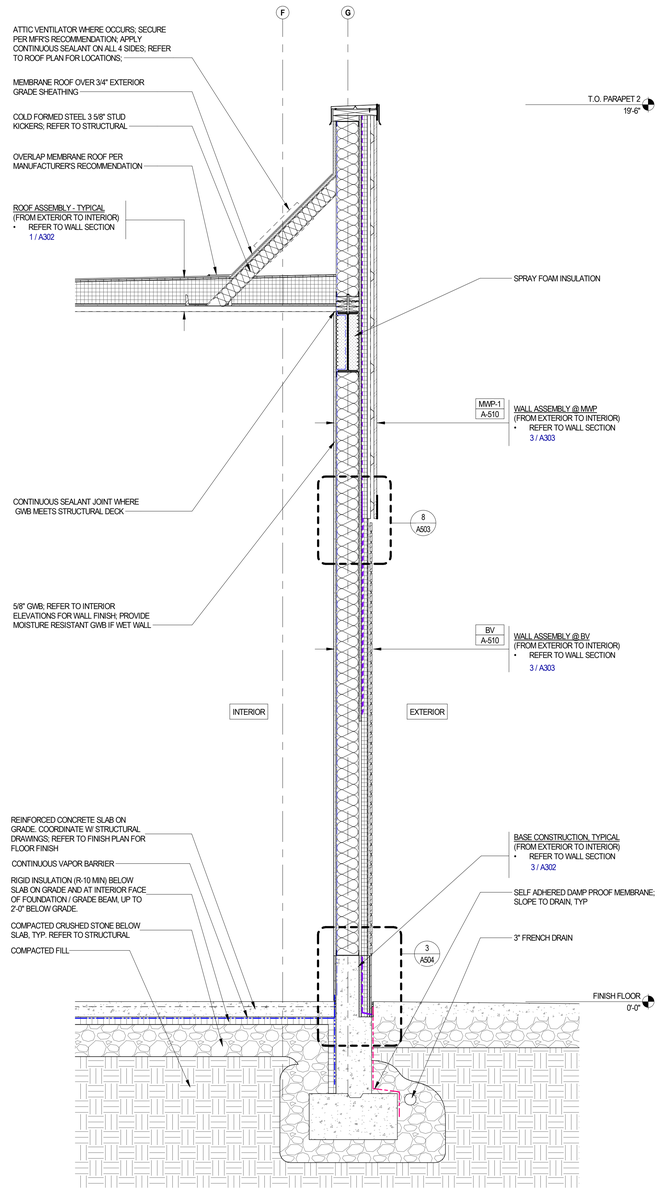


## EXTERIOR WALL SECTION - METAL PANEL/BRICK W BREAK

3/4" = 1'-0" (6" 1'-0" 2'-0")

2

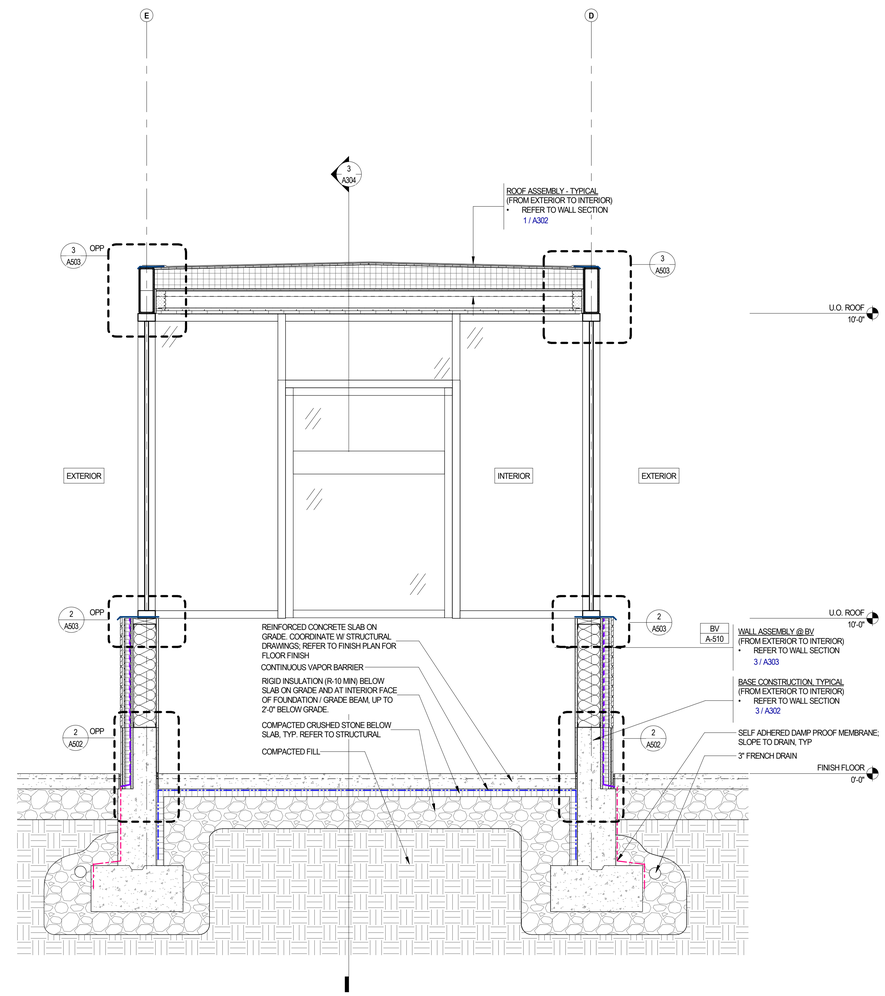


## EXTERIOR WALL SECTION 9 -DRIVE THRU STOREFRONT

3/4" = 1'-0" (6" 1'-0" 2'-0")

1

Bergmeyer
BOS - 51 Sleeper St. 6th Floor Boston, MA 02210 617.542.1025
LA - 800 South Figueroa St. Suite 1060 Los Angeles, CA 90017 212.337.1090
www.bergmeyer.com

CONSULTANTS:

SEAL/ SIGNATURE:

| NO. | BY | DATE | DESCRIPTION |
|---|---|---|---|
| | | 2021-01-11 | PERMIT/BID SET |

SHAKE SHACK

SHAKE SHACK - LEE'S SUMMIT MO

2051 NW LOWENSTEIN DRIVE
LEE'S SUMMIT, MISSOURI 64081
SHACK #1348

PERMIT/BID SET

EXTERIOR WALL SECTIONS

| | |
|---|---|
| DRAWN BY: | CS & WQL |
| CHECKED BY: | JS |
| JOB NO: | 20068.00 |

A305

1/11/2021 6:07:56 PM C:\Users\jkvine\Documents\068_Shake Shack-Lee's Summit_Central_jkvine@bergmeyer.com.rvt

RELEASE FOR CONSTRUCTION
AS NOTED ON PLANS REVIEW
DEVELOPMENT SERVICES
LEE'S SUMMIT, MISSOURI

03/10/2021

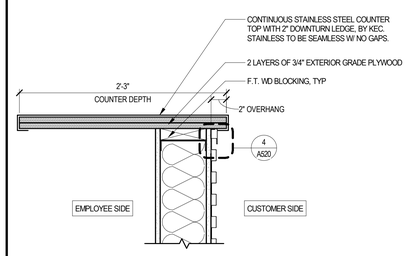


DETAIL - ORDER/ PICK-UP COUNTER — 1 1/2" = 1'-0" — 6

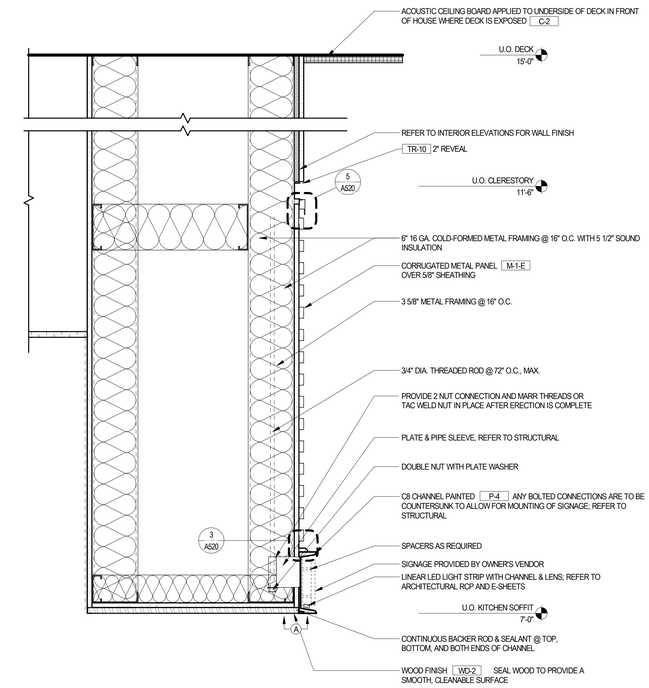


DETAIL - KITCHEN ENGINE SOFFIT — 1 1/2" = 1'-0" — 5

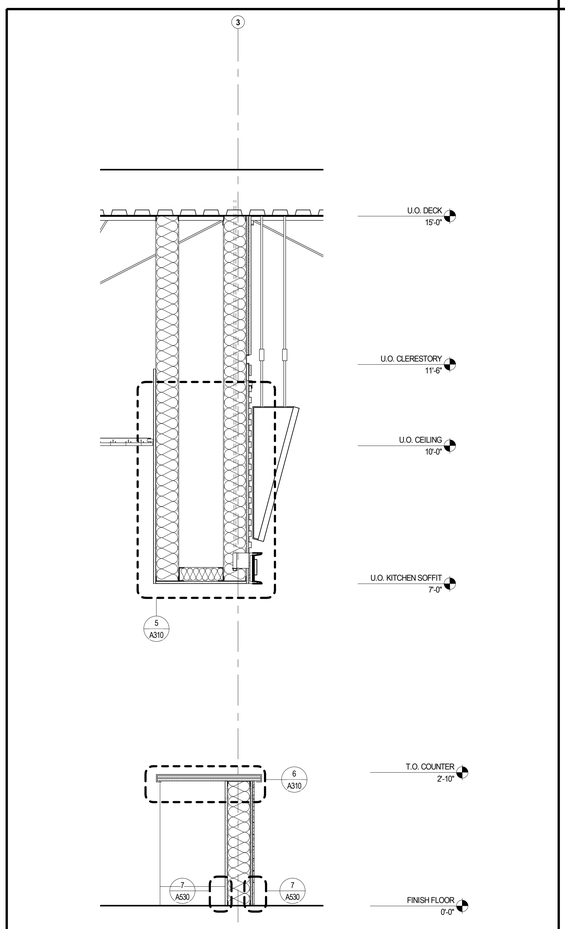


INTERIOR WALL SECTION - KITCHEN ENGINE — 3/4" = 1'-0" — 3

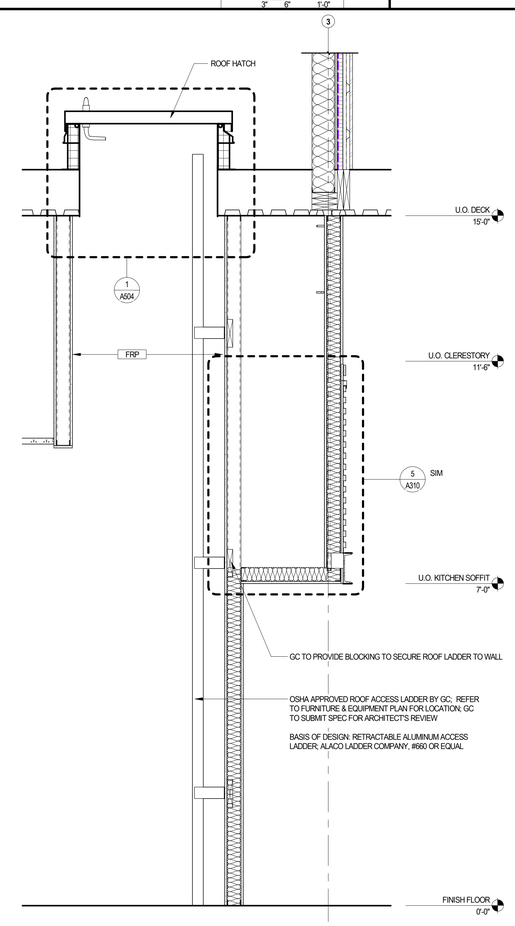


INTERIOR WALL SECTION - ROOF LADDER — 3/4" = 1'-0" — 2

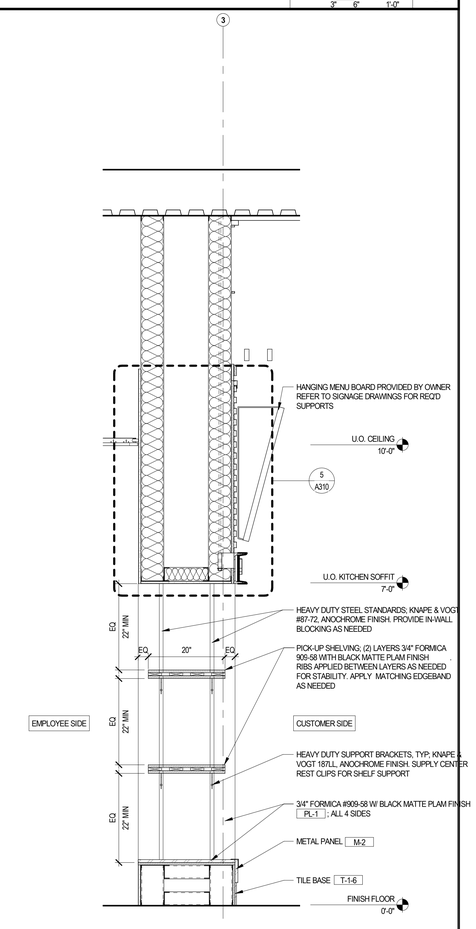


WALL SECTION - INTERIOR - APP PICKUP — 3/4" = 1'-0" — 1


Bergmeyer
www.bergmeyer.com
BOS - 51 Sleeper St. 6th Floor Boston, MA 02210 617.542.1025
LA - 800 South Figueroa St. Suite 1060 Los Angeles, CA 90017 212.337.1090


CONSULTANTS:

SEAL/ SIGNATURE:

| NO. | BY | DATE | DESCRIPTION |
|---|---|---|---|
| | | 2021-01-11 | PERMIT/BID SET |
| | | 2020-12-21 | 75% SET |

SHAKE SHACK

SHAKE SHACK - LEE'S SUMMIT MO

2051 NW LOWENSTEIN DRIVE
LEE'S SUMMIT, MISSOURI 64081
SHACK #1348

PERMIT/BID SET

INTERIOR SECTIONS

| | |
|---|---|
| DRAWN BY: | CS & WQL |
| CHECKED BY: | JS |
| JOB NO: | 20068.00 |

A310


1/11/2021 6:07:59 PM C:\Users\jdevine\Documents\006_Shake Shack Lee's Summit_Central_jdevine@bergmeyer.com.rvt

RELEASE FOR CONSTRUCTION
AS NOTED ON PLANS REVIEW
DEVELOPMENT SERVICES
LEE'S SUMMIT, MISSOURI
03/10/2021

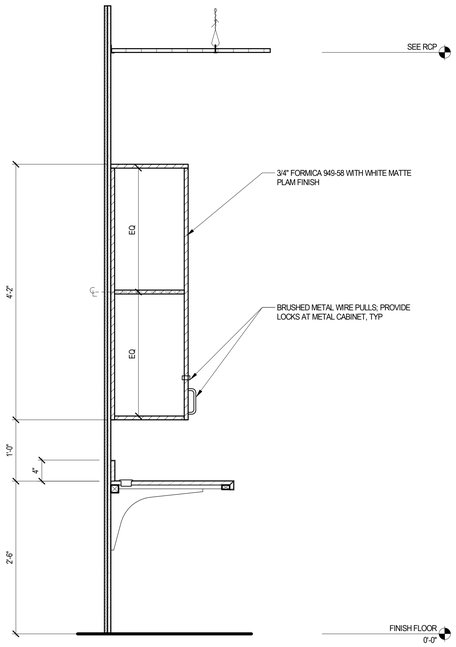


## SECTION DETAIL - MW-1 MILLWORK CABINET

1" = 1'-0" (6" 1'-0" 2'-0") — 8

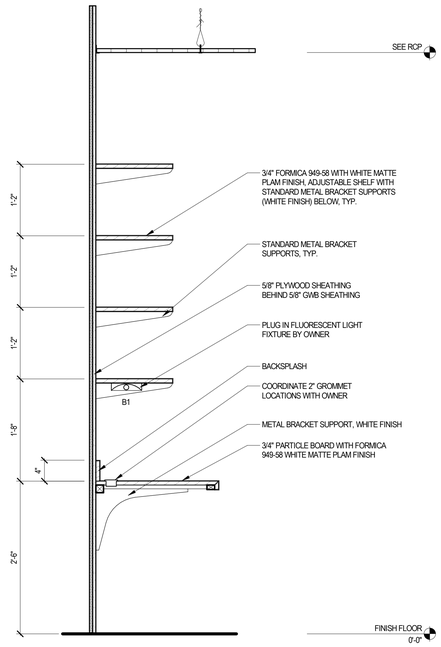


## SECTION DETAIL - MANAGER'S DESK MW-1

1" = 1'-0" (6" 1'-0" 2'-0") — 7

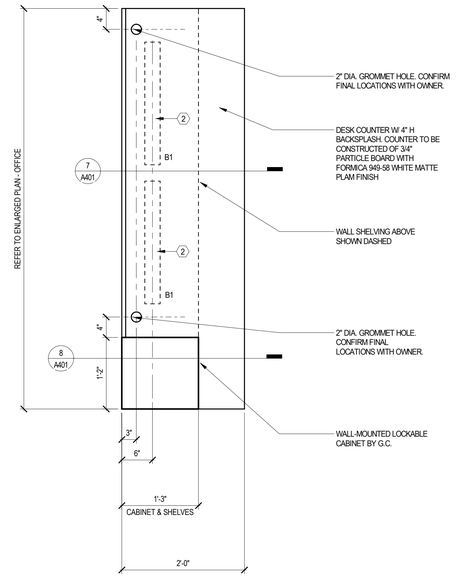


## PLAN DETAIL - MANAGER'S DESK MW-1

1" = 1'-0" (6" 1'-0" 2'-0") — 6

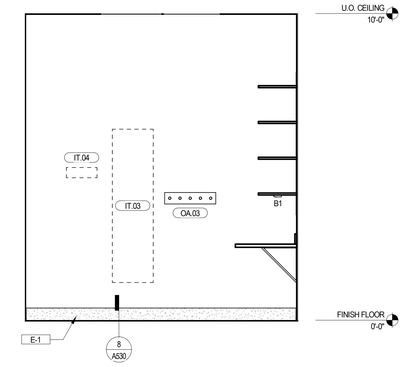


## INTERIOR ELEVATION - MANAGERS OFFICE NORTH

1/2" = 1'-0" (1'-0" 2'-0" 4'-0") — 5

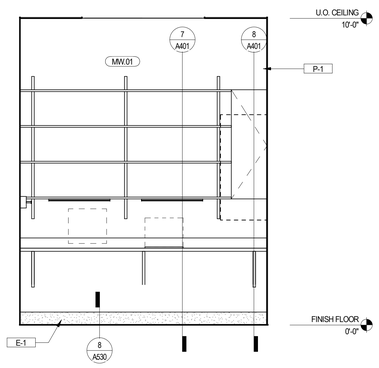


## INTERIOR ELEVATION - MANAGERS OFFICE EAST

1/2" = 1'-0" (1'-0" 2'-0" 4'-0") — 4

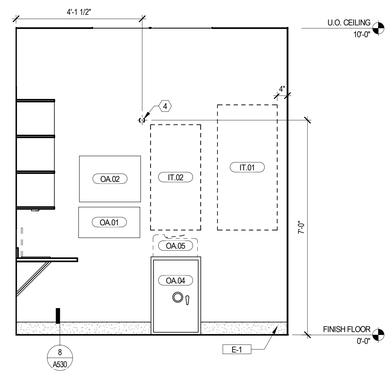


## INTERIOR ELEVATION - MANAGERS OFFICE SOUTH

1/2" = 1'-0" (1'-0" 2'-0" 4'-0") — 3

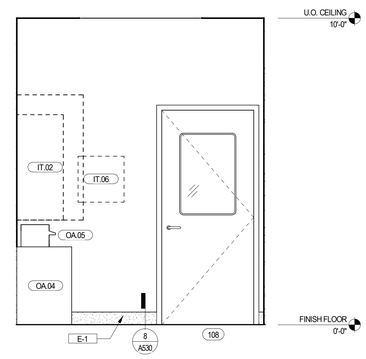


## INTERIOR ELEVATION - MANAGERS OFFICE WEST

1/2" = 1'-0" (1'-0" 2'-0" 4'-0") — 2

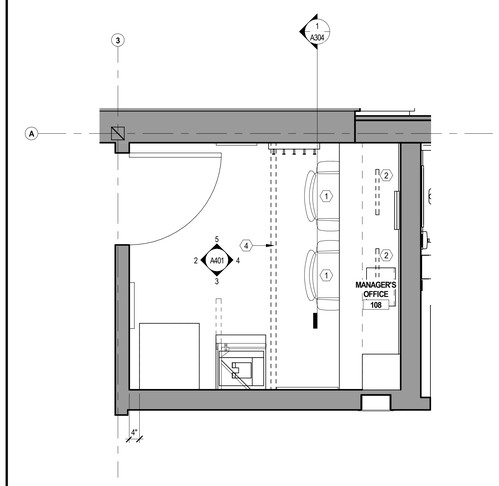


## ENLARGED PLAN - MANAGERS OFFICE

1/2" = 1'-0" (1'-0" 2'-0" 4'-0") — 1

## OFFICE ACCESSORIES SCHEDULE

GC = GENERAL CONTRACTOR
O = OWNER / OWNER'S VENDOR

| TAG NO. | QTY | ITEM | MANUFACTURER | MODEL NO. | FURNISH | INSTALL | COMMENTS |
|---|---|---|---|---|---|---|---|
| OA.01 | 1 | MONTHY CALENDER | THE CONTAINER STORE | MAGNETIC DRY ERASE BOARD; ITEM# 10063520 | GC | GC | |
| OA.02 | 1 | CORK BOARD | THE CONTAINER STORE | CORK BOARD NATURAL; 18" H X 24" WIDE | GC | GC | |
| OA.03 | 1 | 6 HOOK RACK | THE CONTAINER STORE | SCALA 6-HOOK RACK; ITEM# 10016305 | GC | GC | |
| OA.04 | 1 | SAFE | ACME SAFE CO | FL3920 | GC | GC | |
| OA.05 | 1 | PRINTER | | | O | O | |

## IT EQUIPMENT SCHEDULE

GC = GENERAL CONTRACTOR
O = OWNER / OWNER'S VENDOR

| TAG NO. | QTY | ITEM | MANUFACTURER | MODEL NO. | FURNISH | INSTALL | COMMENTS |
|---|---|---|---|---|---|---|---|
| IT.01 | 1 | IT RACK | MIDDLE ATLANTIC PRODUCTS | DWR-24-26 | O | O | |
| IT.02 | 1 | CABLE BOX RACK | MIDDLE ATLANTIC PRODUCTS | SFR-20-18 | O | GC | |
| IT.03 | 1 | DIMMER PANEL | | | O | O | |
| IT.04 | 1 | ANALOG PANEL | | | O | O | |
| IT.06 | 1 | HVAC CONTROL AREA | | | O | O | |

## MILLWORK SCHEDULE

GC = GENERAL CONTRACTOR
O = OWNER / OWNER'S VENDOR

| TAG NO. | QTY | ITEM | MANUFACTURER | MODEL NO. | FURNISH | INSTALL | COMMENTS |
|---|---|---|---|---|---|---|---|
| MW.01 | 1 | MANAGER'S DESK | | | GC | GC | |

## KEYNOTES

1. OFFICE CHAIR BY TENANT
2. PLUG-IN FLUORESCENT LIGHT STRIPS. PROVIDE ELECTRICAL OUTLET @ 44" AFF. REFER TO ELECTRICAL DRAWINGS FOR ADDITIONAL INFORMATION.
3. PANEL BY OWNER'S CONTRACTOR; GC TO PROVIDE POWER AND DATA. VERIFY FINAL LOCATION WITH OWNER PRIOR TO INSTALLATION.
4. PRIVACY CURTAIN. GC TO PROVIDE AND INSTALL WALL BRACKETS ONLY. VERIFY FINAL LOCATION W/ OWNER PRIOR TO INSTALLATION. BRACKETS TO BE GATCO 832 WALL FLANGE 2-3/8"; CL OF BRACKET @ 7'-0" AFF

## SYMBOL LEGEND

| SYMBOL | DESCRIPTION |
|---|---|
| | NEW PARTITION (FULL HEIGHT) |
| | NEW DOOR |
| 01 | KEYNOTE |
| XX.00 TAG NOTE | MILLWORK / IT / EQUIPMENT TAG; REFER TO SCHEDULES ON SHEET |
| E-1 | FINISH TAG; REFER TO FINISH SCHEDULE |

## GENERAL NOTES

A. G.C. TO USE FORMICA 949-58 WHITE MATTE FINISH FOR PLAM COUNTER AND CABINETS
B. G.C. TO COORDINATE MILLWORK HARDWARE INCLUDING, BUT NOT LIMITED TO, LOCKS, HINGES, AND PULLS PRIOR TO INSTALLATION
C. ALL MILLWORK TO BE MANUFACTURED AND INSTALLED BEFORE THE CUSTOM GRADE CLASSIFICATION OF THE AWI. (ARCHITECTURAL WOODWORK INSTITUTE).
D. PROVIDE SHOP DRAWINGS OF ALL MILLWORK FOR REVIEW PRIOR TO FABRICATION.
E. REFER TO E-SHEETS FOR SCHEMATIC POWER AND DATA LAYOUT. G.C. TO COORDINATE FINAL LAYOUT W/ TENANTS AV, SECURITY, AND LT. CONSULTANTS.
F. G.C. TO COORDINATE ALL EQUIPMENT AND LOCATIONS WITH OWNERS AV, SECURITY, AND LT. CONSULTANTS PRIOR TO INSTALLATION OF BLOCKING AND UTILITIES.

REFER TO VENDOR LIST FOR CONTACT INFO

IT EQUIPMENT SHOWN DASHED FOR REFERENCE. COORDINATE FINAL LOCATIONS WITH OWNER PRIOR TO INSTALLATION; REFER TO ELECTRICAL DRAWINGS FOR POWER & DATA OUTLET HEIGHTS


Bergmeyer
BOS - 51 Sleeper St. 6th Floor Boston, MA 02210 617.542.1025
LA - 800 South Figueroa St. Suite 1060 Los Angeles, CA 90017 212.337.1090
www.bergmeyer.com


CONSULTANTS:

SEAL/ SIGNATURE:

| NO. | BY | DATE | DESCRIPTION |
|---|---|---|---|
| | | 2021-01-11 | PERMIT/BID SET |
| | | 2020-12-21 | 75% SET |

SHAKE SHACK

SHAKE SHACK - LEE'S SUMMIT MO

2051 NW LOWENSTEIN DRIVE
LEE'S SUMMIT, MISSOURI 64081
SHACK #1348

PERMIT/BID SET

ENLARGED MANAGER'S OFFICE PLAN

DRAWN BY: CS & WQL
CHECKED BY: JS
JOB NO: 20068.00

A401

C:\Users\djevine\Documents\068_Shake Shack-Lee's Summit_Central_djevine@bergmeyer.com.rvt
1/11/2021 6:08:04 PM

RELEASE FOR CONSTRUCTION
AS NOTED ON PLANS REVIEW
DEVELOPMENT SERVICES
LEE'S SUMMIT, MISSOURI
03/10/2021

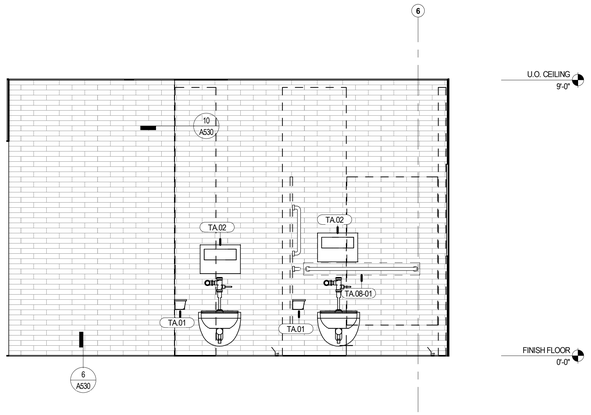


INTERIOR ELEVATION — 1/2" = 1'-0" — 5

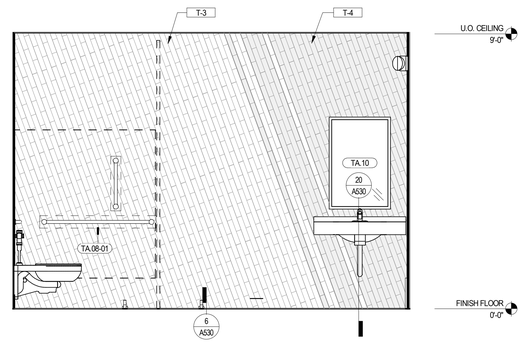


INTERIOR ELEVATION — 1/2" = 1'-0" — 4

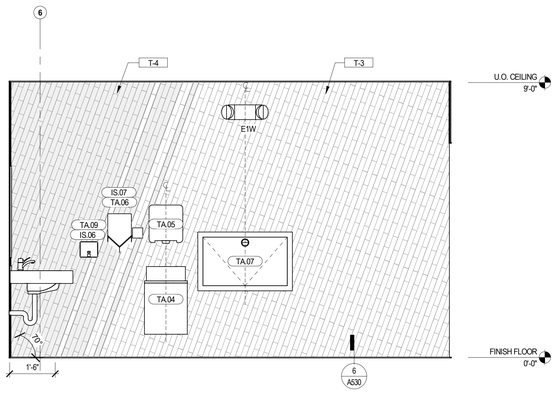


INTERIOR ELEVATION - WOMENS RESTROOM SOUTH — 1/2" = 1'-0" — 3

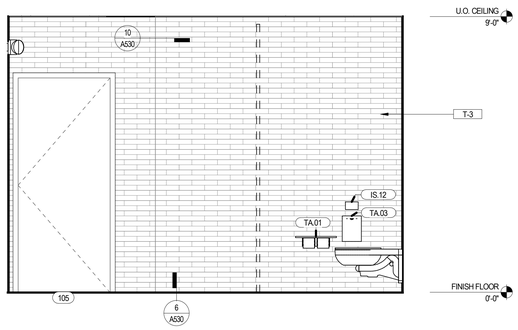


INTERIOR ELEVATION — 1/2" = 1'-0" — 2

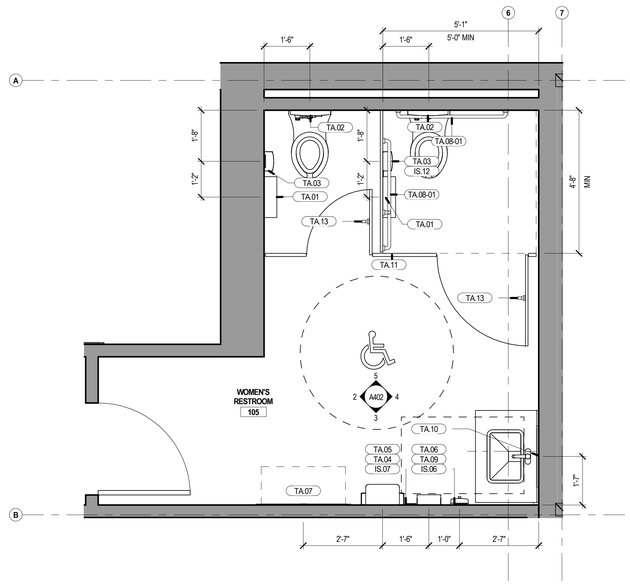


ENLARGED PLAN - WOMENS RESTROOM — 1/2" = 1'-0" — 1

## RESTROOM TYPICAL MOUNTING HEIGHTS

NOTE: GC TO FOLLOW APPLICABLE ACCESSIBILITY CODES PER LOCAL JURISDICTION; CONTACT ARCHITECT WITH ANY DISCREPANCIES

FIXTURES ARE SHOWN TO ILLUSTRATE TYPICAL HEIGHTS FROM FINISH FLOOR. ITEMS DEPICTED MAY VARY IN ELEVATION, BUT HEIGHTS ARE TYPICAL

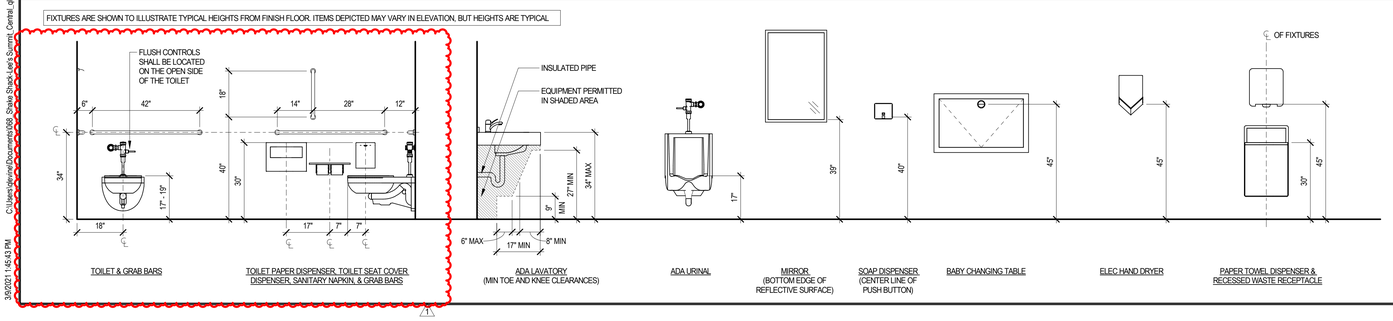


## WOMEN'S RESTROOM ACCESSORIES SCHEDULE

GC = GENERAL CONTRACTOR
O = OWNER / OWNERS VENDOR

| TAG NO. | QTY | ITEM | MANUFACTURER | MODEL NO. | RESPONSIBILITY FURNISH | RESPONSIBILITY INSTALL |
|---|---|---|---|---|---|---|
| TA.01 | 2 | TOILET TISSUE DISPENSER WITH UTILITY SHELF | BOBRICK | B-2840 | O | GC |
| TA.02 | 2 | SEAT COVER DISPENSER | BOBRICK | B-4221 | O | GC |
| TA.03 | 2 | SANITARY NAPKIN DISPOSAL | BOBRICK | B-270 | | |
| TA.04 | 1 | RECESSED WASTE RECEPTACLE | BOBRICK | B-43644 | O | GC |
| TA.06 | 1 | HAND DRYER | DYSON | HU02, SPRAYED NICKEL, AB12 | O | GC |
| TA.07 | 1 | BABY CHANGING STATION - HORIZONTAL RECESSED MTD. | KOALA KARE PRODUCTS | KB110-SSRE, STAINLESS STEEL FINISH | O | GC |
| TA.08-01 | 2 | GRAB BAR - HORIZONTAL | BOBRICK | B-5806 x 42 | O | GC |
| TA.08-02 | 1 | GRAB BAR - VERTICAL | BOBRICK | B-5806 x 18 | O | GC |
| TA.09 | 1 | SOAP DISPENSER | BOBRICK | B-4112 | O | GC |
| TA.10 | 1 | MIRROR | BOBRICK | B-2908 24" X 36" | O | GC |
| TA.11 | 1 | TOILET PARTITIONS | METPAR | FP BOTTOM & FP TOP SERIES; FINISH: STAINLESS STEEL | | |
| TA.13 | 2 | COAT HOOK | BOBRICK | B-6827 | O | GC |

REFER TO RESTROOM TYPICAL MOUNTING HEIGHTS LEGEND FOR ANY DIMENSIONS NOT SHOWN ON PLAN OR ELEVATIONS

GC TO PROVIDE NECESSARY FRT BLOCKING BEHIND TOILET ACCESSORIES

REFER TO FURNITURE & EQUIPMENT PLAN FOR INTERIOR SIGNAGE SCHEDULE (IS.XX)

## GENERAL NOTES

A. **GC TO PROVIDE FRT BLOCKING AS REQUIRED FOR ALL WALL MOUNTED FIXTURES**

## SYMBOL LEGEND

| SYMBOL | DESCRIPTION |
|---|---|
| | NEW PARTITION |
| | NEW DOOR |
| P-6 | FINISH TAG. SEE SHEET A601 FOR FINISH SCHEDULE |
| XX.00 TAG NOTE | TOILET ACCESSORIES AND SIGNAGE TAG. REFER TO TOILET ACCESSORIES SCHEDULE ON A402 & SIGNAGE, GRAPHICS & MISC. SCHEDULE ON A105 |

Bergmeyer
BOS - 51 Sleeper St. 6th Floor Boston, MA 02210 617.542.1025
LA - 800 South Figueroa St. Suite 1060 Los Angeles, CA 90017 212.337.1090
www.bergmeyer.com

CONSULTANTS:

SEAL/ SIGNATURE:

| NO. | BY | DATE | DESCRIPTION |
|---|---|---|---|
| 1 | | 2021-03-09 | ADDENDUM 1 |
| | | 2021-01-11 | PERMIT/BID SET |
| | | 2020-12-21 | 75% SET |

SHAKE SHACK

SHAKE SHACK - LEE'S SUMMIT MO

2051 NW LOWENSTEIN DRIVE
LEE'S SUMMIT, MISSOURI 64081
SHACK #1348

PERMIT/BID SET

ENLARGED WOMENS RESTROOM PLAN

DRAWN BY: CS & WQL
CHECKED BY: JS
JOB NO: 20068.00

A402

C:\Users\jevine\Documents\R23_Shake Shack Lee's Summit_Central_jevine@bergmeyer.com.rvt
3/5/2021 1:45:13 PM

RELEASE FOR CONSTRUCTION
AS NOTED ON PLANS REVIEW
DEVELOPMENT SERVICES
LEE'S SUMMIT, MISSOURI
03/10/2021

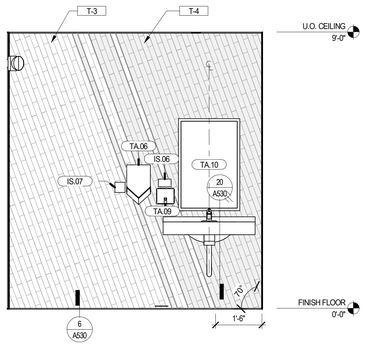


INTERIOR ELEVATION - MENS RESTROOM WEST 1/2" = 1'-0" 5

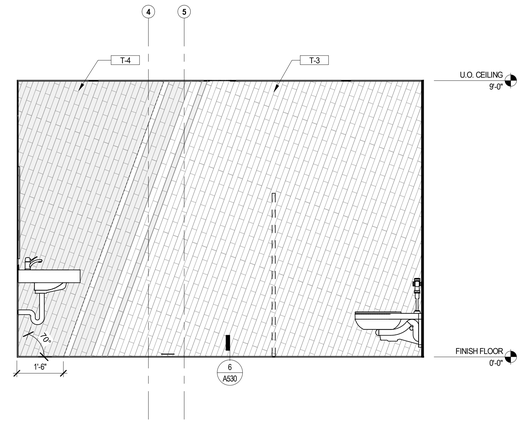


INTERIOR ELEVATION - MENS RESTROOM NORTH 1/2" = 1'-0" 4

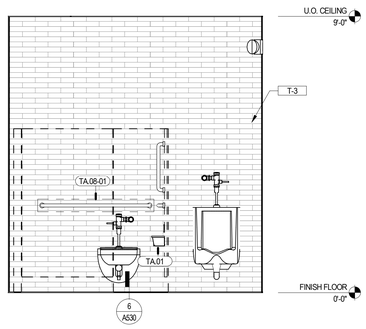


INTERIOR ELEVATION - MENS RESTROOM EAST 1/2" = 1'-0" 3

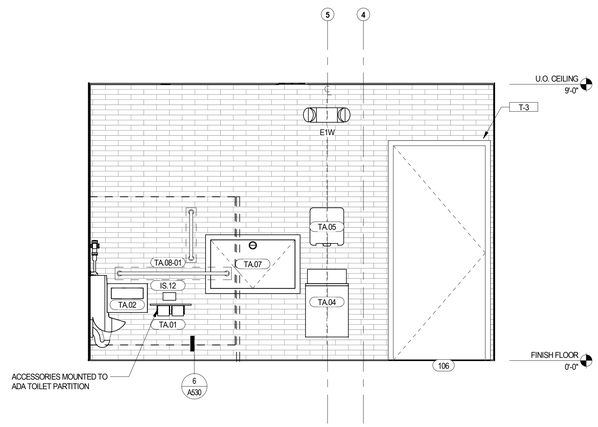


INTERIOR ELEVATION - MENS RESTROOM SOUTH 1/2" = 1'-0" 2

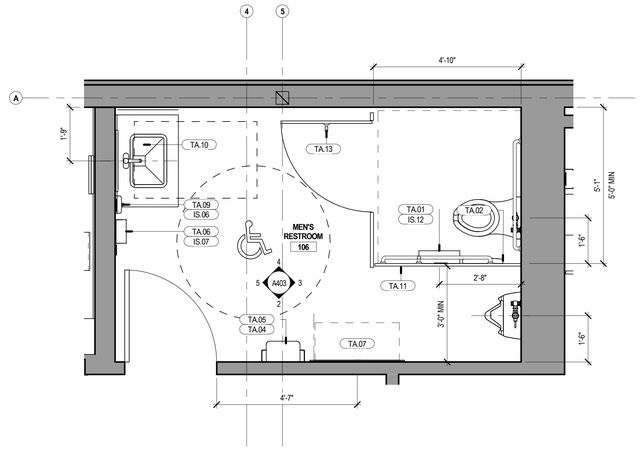


ENLARGED PLAN - MENS RESTROOM 1/2" = 1'-0" 1

## RESTROOM TYPICAL MOUNTING HEIGHTS

NOTE: GC TO FOLLOW APPLICABLE ACCESSIBILITY CODES PER LOCAL JURISDICTION; CONTACT ARCHITECT WITH ANY DISCREPANCIES

FIXTURES ARE SHOWN TO ILLUSTRATE TYPICAL HEIGHTS FROM FINISH FLOOR. ITEMS DEPICTED MAY VARY IN ELEVATION, BUT HEIGHTS ARE TYPICAL

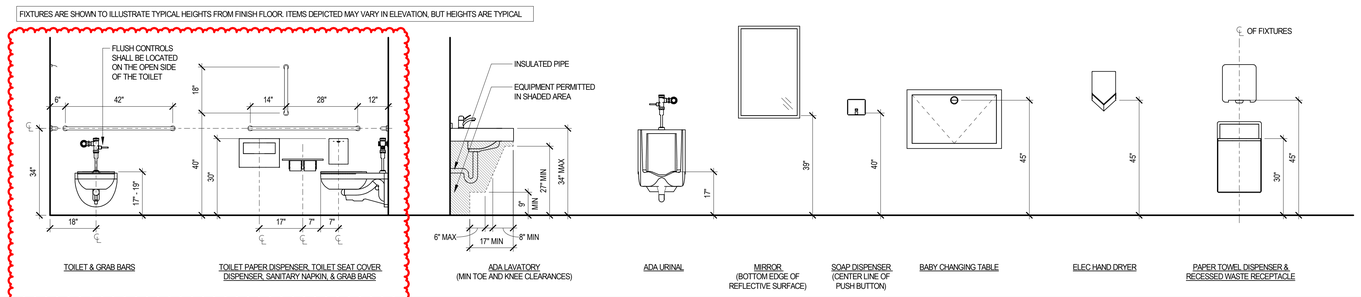


## MEN'S RESTROOM ACCESSORIES SCHEDULE

GC = GENERAL CONTRACTOR
O = OWNER / OWNER'S VENDOR

| TAG NO. | QTY | ITEM | MANUFACTURER | MODEL NO. | RESPONSIBILITY: FURNISH | RESPONSIBILITY: INSTALL |
|---|---|---|---|---|---|---|
| TA.01 | 1 | TOILET TISSUE DISPENSER WITH UTILITY SHELF | BOBRICK | B-2840 | O | GC |
| TA.02 | 1 | SEAT COVER DISPENSER | BOBRICK | B-4221 | O | GC |
| TA.04 | 1 | RECESSED WASTE RECEPTACLE | BOBRICK | B-43644 | O | GC |
| TA.06 | 1 | HAND DRYER | DYSON | HU02, SPRAYED NICKEL, AB12 | O | GC |
| TA.07 | 1 | BABY CHANGING STATION - HORIZONTAL RECESSED MTD | KOALA KARE PRODUCTS | KB110-SSRE, STAINLESS STEEL FINISH | O | GC |
| TA.08-01 | 2 | GRAB BAR - HORIZONTAL | BOBRICK | B-5806 x 42 | O | GC |
| TA.08-02 | 1 | GRAB BAR - VERTICAL | BOBRICK | B-5806 x 18 | O | GC |
| TA.09 | 1 | SOAP DISPENSER | BOBRICK | B-4112 | O | GC |
| TA.11 | 1 | TOILET PARTITIONS | BOBRICK | COMPACT LAMINATE, FLOOR TO CEILING MOUNTED, CHARCOAL | GC | GC |
| TA.13 | 1 | COAT HOOK | BOBRICK | B-6827 | O | GC |

REFER TO RESTROOM TYPICAL MOUNTING HEIGHTS LEGEND FOR ANY DIMENSIONS NOT SHOWN ON PLAN OR ELEVATIONS

GC TO PROVIDE NECESSARY FRT BLOCKING BEHIND TOILET ACCESSORIES

REFER TO SIGNAGE & GRAPHICS PLAN FOR INTERIOR SIGNAGE SCHEDULE (IS.XX)

## GENERAL NOTES

A. **GC TO PROVIDE FRT BLOCKING AS REQUIRED FOR ALL WALL MOUNTED FIXTURES**

## SYMBOL LEGEND

| SYMBOL | DESCRIPTION |
|---|---|
| | NEW PARTITION |
| | NEW DOOR |
| P-6 | FINISH TAG. SEE SHEET A601 FOR FINISH SCHEDULE |
| XX.00 TAG NOTE | TOILET ACCESSORIES AND SIGNAGE TAG; REFER TO TOILET ACCESSORIES SCHEDULE ON A402 & SIGNAGE, GRAPHICS & MISC. SCHEDULE ON A105 |


Bergmeyer
BOS - 51 Sleeper St. 6th Floor Boston, MA 02210 617.542.1025
LA - 800 South Figueroa St. Suite 1060 Los Angeles, CA 90017 212.337.1090
www.bergmeyer.com


CONSULTANTS:

SEAL/ SIGNATURE:

| NO. | BY | DATE | DESCRIPTION |
|---|---|---|---|
| 1 | | 2021-03-09 | ADDENDUM 1 |
| | | 2021-01-11 | PERMIT/BID SET |
| | | 2020-12-21 | 75% SET |

SHAKE SHACK

SHAKE SHACK - LEE'S SUMMIT MO

2051 NW LOWENSTEIN DRIVE
LEE'S SUMMIT, MISSOURI 64081
SHACK #1348

PERMIT/BID SET

ENLARGED MENS RESTROOM PLAN

DRAWN BY: CS & WQL
CHECKED BY: JS
JOB NO: 20068.00

A403

C:\Users\djevine\Documents\068_Shake Shack-Lee's Summit_Central_djevine@bergmeyer.com.rvt
3/9/2021 1:45:48 PM

RELEASE FOR CONSTRUCTION
AS NOTED ON PLANS REVIEW
DEVELOPMENT SERVICES
LEE'S SUMMIT, MISSOURI
03/10/2021

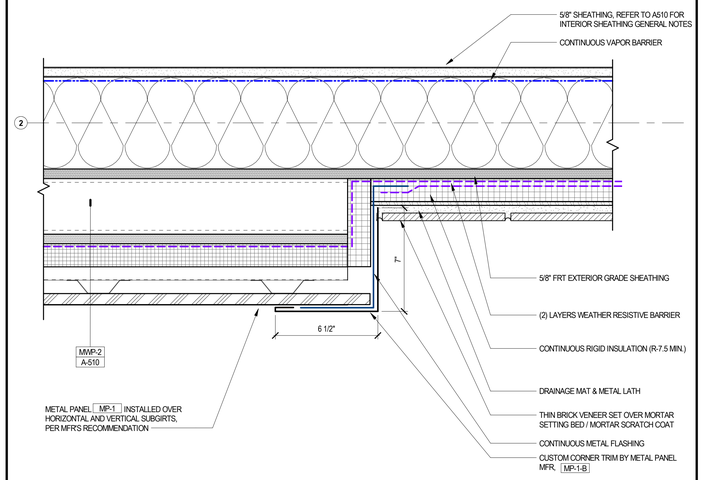


PLAN DETAIL - THIN BRICK TO METAL PANEL — 3" = 1'-0" — 8

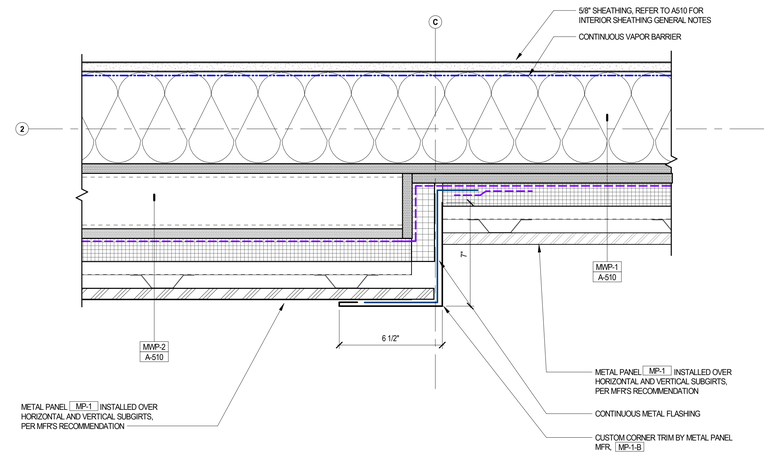


PLAN DETAIL - METAL PANEL TO METAL PANEL — 3" = 1'-0" — 7

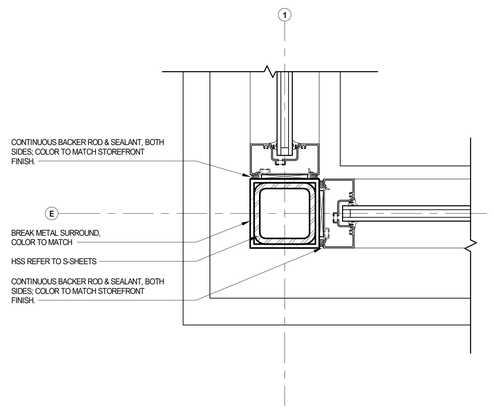


PLAN DETAIL - DRIVE THRU CORNER — 3" = 1'-0" — 6

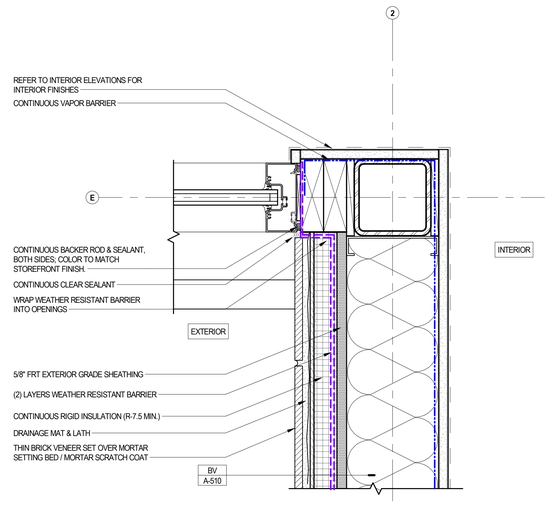


PLAN DETAIL - DRIVE THRU TERMINATION — 3" = 1'-0" — 5

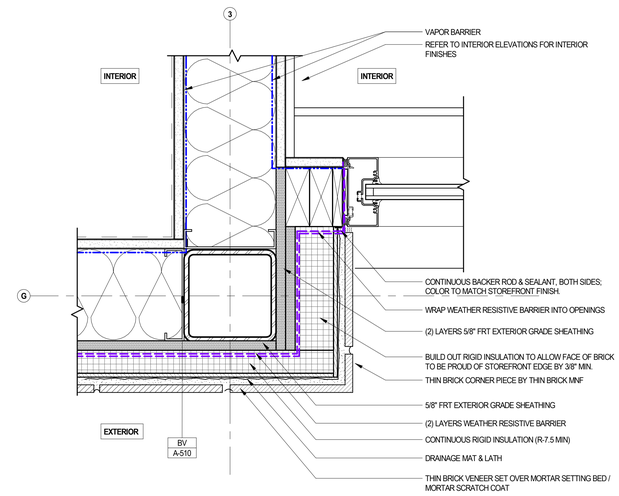


PLAN DETAIL - STOREFRONT TERMINATION — 3" = 1'-0" — 1

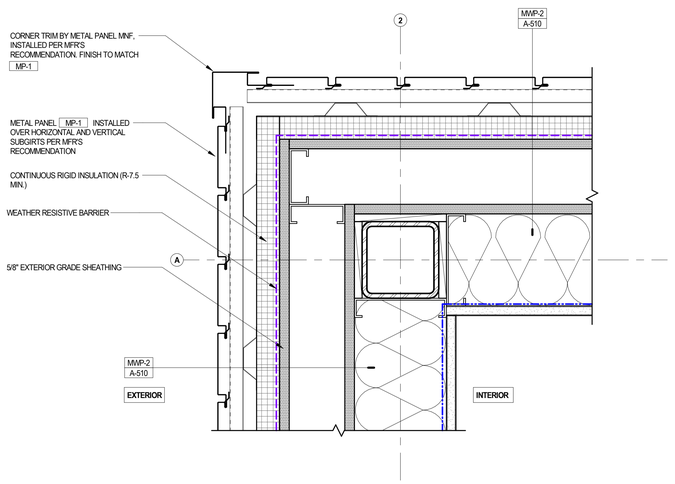


PLAN DETAIL - ATAS CORNER — 3" = 1'-0" — 4

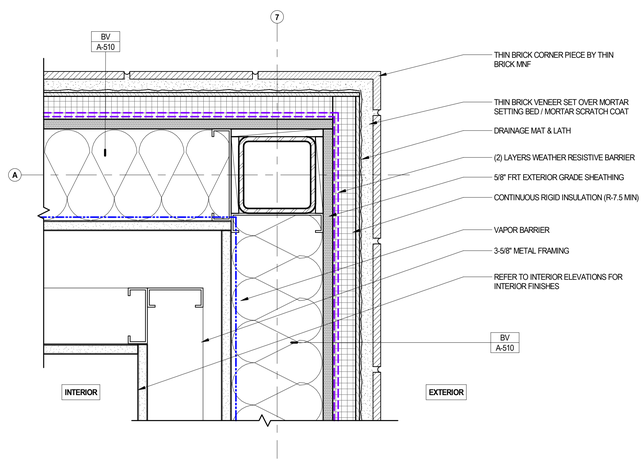


EXTERIOR PLAN DETAIL - EXT. CORNER AT THIN BRICK — 3" = 1'-0" — 3

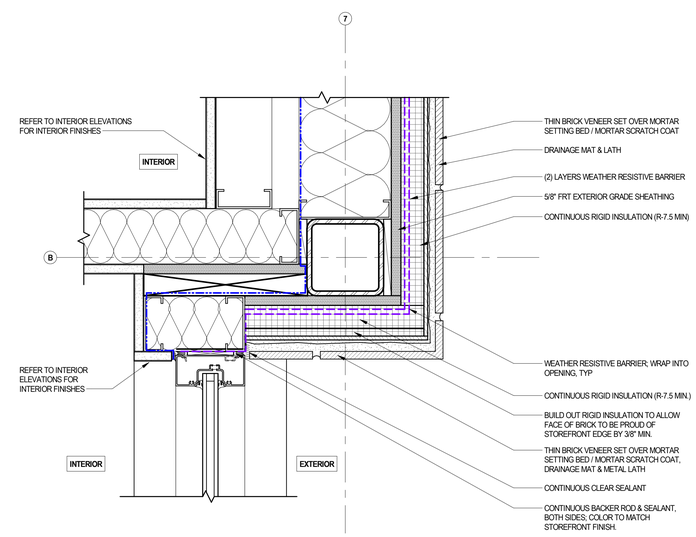


PLAN DETAIL - STOREFRONT TERMINATION AT DINING — 3" = 1'-0" — 2

Bergmeyer
BOS - 51 Sleeper St. 6th Floor Boston, MA 02210 617.542.1025
LA - 800 South Figueroa St. Suite 1060 Los Angeles, CA 90017 212.337.1090
www.bergmeyer.com

CONSULTANTS:

SEAL/ SIGNATURE:

| NO. | BY | DATE | DESCRIPTION |
|---|---|---|---|
| | | 2021-01-11 | PERMIT/BID SET |
| | | 2020-12-21 | 75% SET |

SHAKE SHACK

SHAKE SHACK - LEE'S SUMMIT MO

2051 NW LOWENSTEIN DRIVE
LEE'S SUMMIT, MISSOURI 64081
SHACK #1348

PERMIT/BID SET

EXTERIOR DETAILS - PLAN

DRAWN BY: CS & WQL
CHECKED BY: JS
JOB NO: 20068.00

A501

1/11/2021 6:08:18 PM C:\Users\djevine\Documents\068_Shake Shack-Lee's Summit_Central_djevine@bergmeyer.com.rvt

RELEASE FOR CONSTRUCTION
AS NOTED ON PLANS REVIEW
DEVELOPMENT SERVICES
LEE'S SUMMIT, MISSOURI
03/10/2021

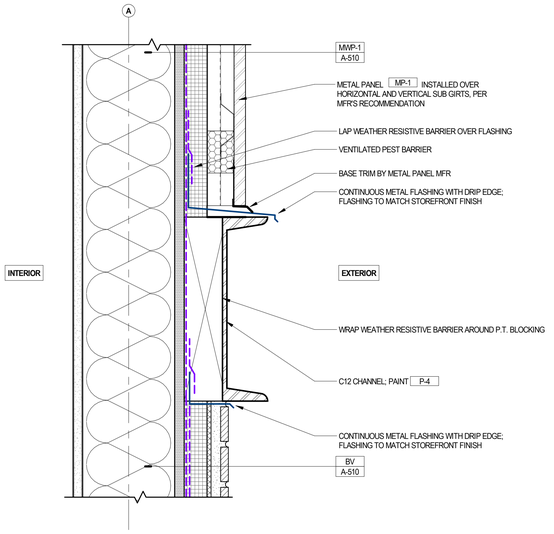


## SECTION DETAIL - CHANNEL AT WALL

3" = 1'-0" — 9

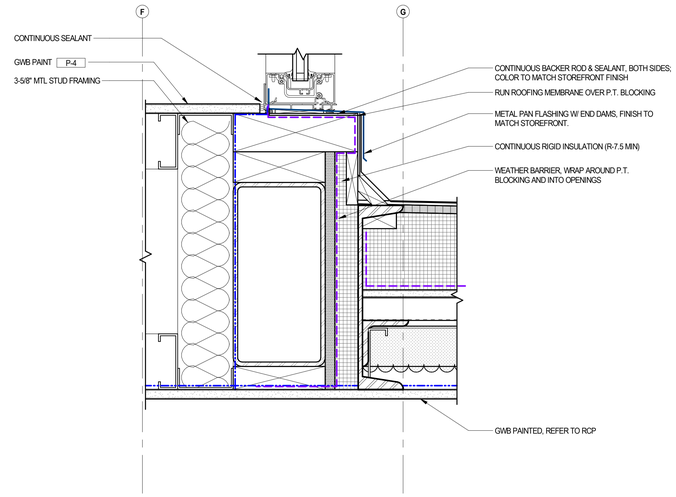


## SECTION DETAIL - HEADER @ VESTIBULE

3" = 1'-0" — 8

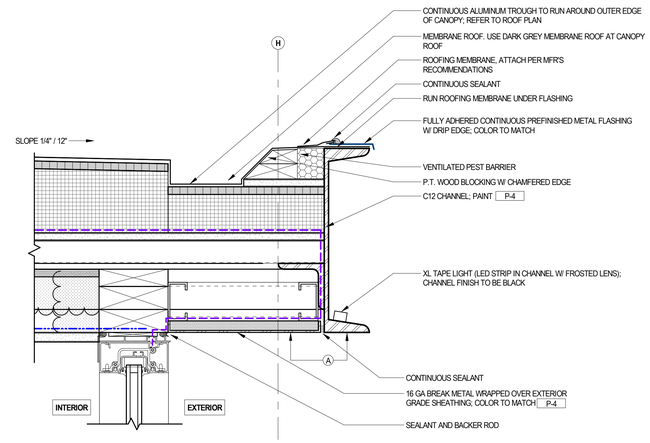


## SECTION DETAIL - CHANNEL @ VESTIBULE

3" = 1'-0" — 7

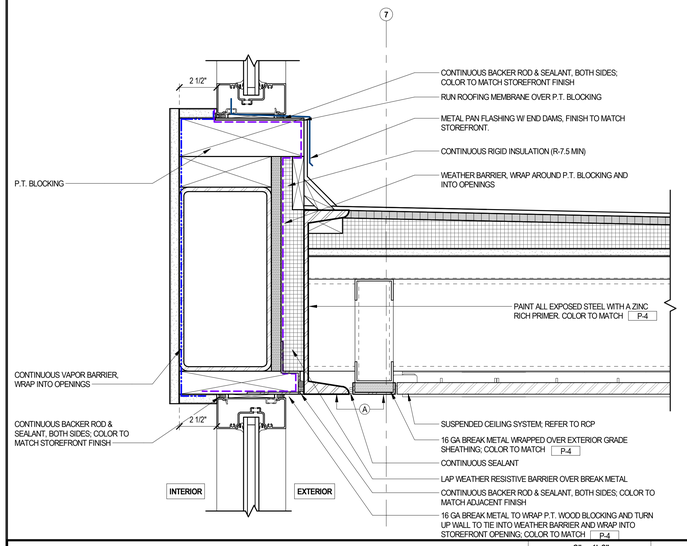


## EXTERIOR SECTION DETAIL - STOREFRONT HEADER

3" = 1'-0" — 6

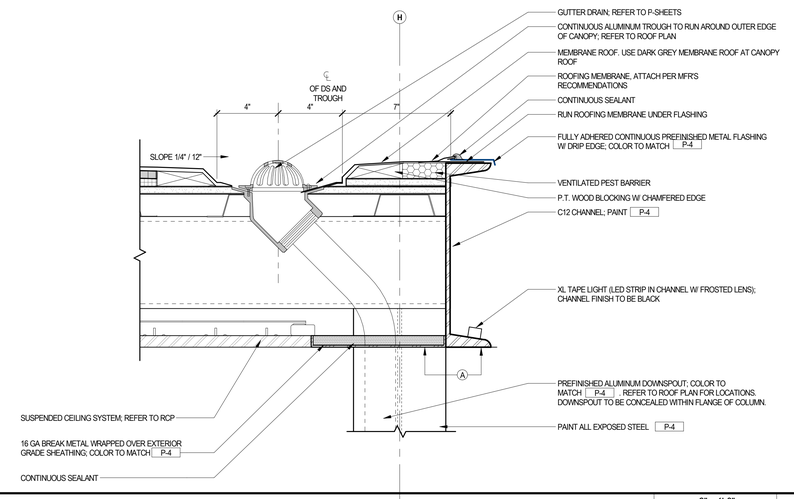


## SECTION DETAIL - CANOPY DRAIN

3" = 1'-0" — 5

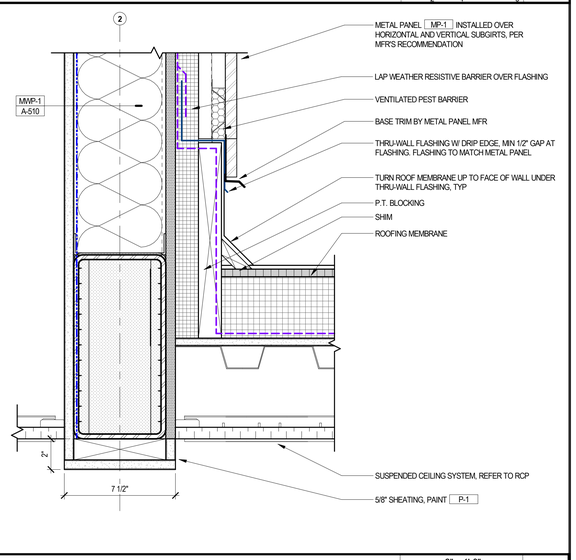


## EXTERIOR DETAIL - BASE FLASHING

3" = 1'-0" — 4

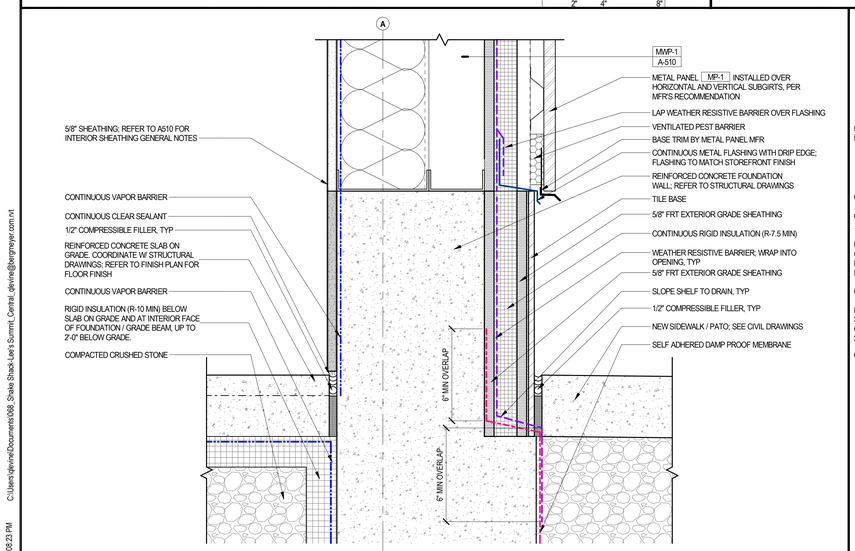


## BASE DETAIL - METAL PANEL

3" = 1'-0" — 3

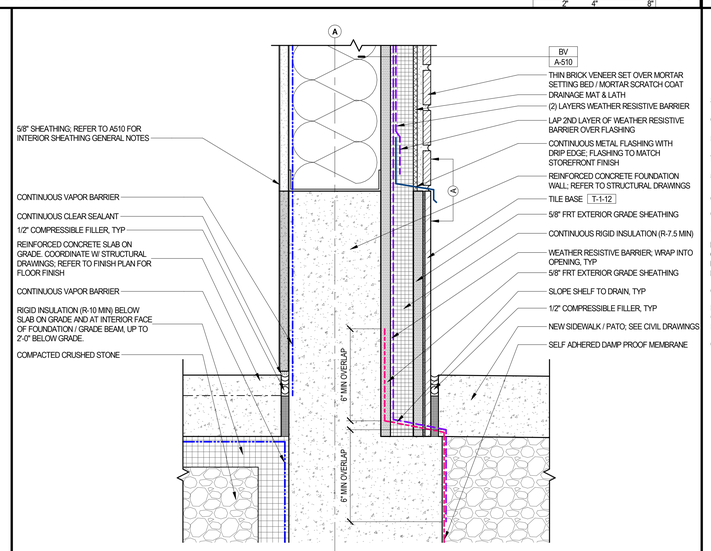


## BASE DETAIL - BRICK

3" = 1'-0" — 2

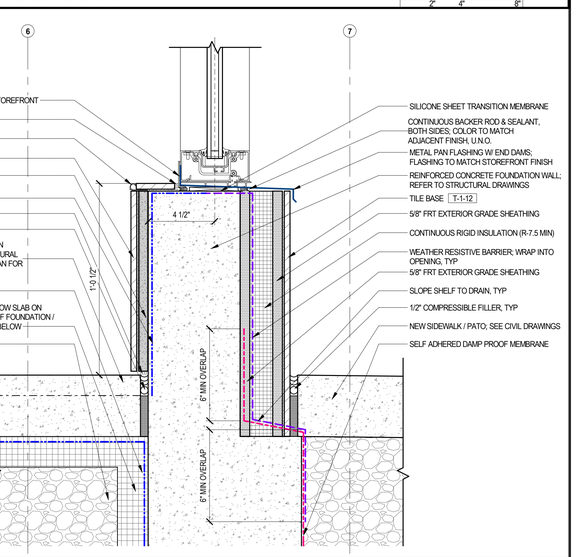


## BASE DETAIL - STOREFRONT SILL

3" = 1'-0" — 1

Bergmeyer
LA - 800 South Figueroa St. Suite 1060 Los Angeles, CA 90017 212.337.1090
BOS - 51 Sleeper St. 6th Floor Boston, MA 02210 617.542.1025
www.bergmeyer.com

CONSULTANTS:

SEAL/ SIGNATURE:

| NO. | BY | DATE | DESCRIPTION |
|---|---|---|---|
| | | 2021-01-11 | PERMIT/BID SET |
| | | 2020-12-21 | 75% SET |

SHAKE SHACK

SHAKE SHACK - LEE'S SUMMIT MO

2051 NW LOWENSTEIN DRIVE
LEE'S SUMMIT, MISSOURI 64081
SHACK #1348

PERMIT/BID SET

EXTERIOR DETAILS - SECTION

| | |
|---|---|
| DRAWN BY: | CS & WQL |
| CHECKED BY: | JS |
| JOB NO: | 20068.00 |

A502

1/11/2021 6:08:23 PM C:\Users\jdevine\Documents\008_Shake Shack-Lee's Summit_Central_jdevine@bergmeyer.com.rvt

RELEASE FOR CONSTRUCTION
AS NOTED ON PLANS REVIEW
DEVELOPMENT SERVICES
LEE'S SUMMIT, MISSOURI
03/10/2021

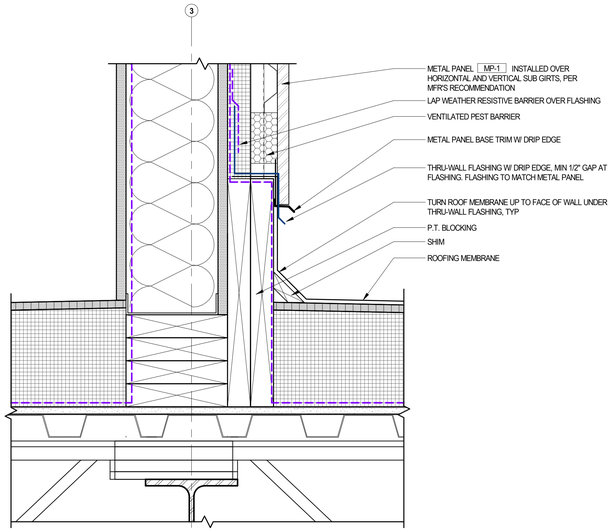


## SECTION DETAIL - BASE FLASHING AT INNER PARAPET

3" = 1'-0" 9

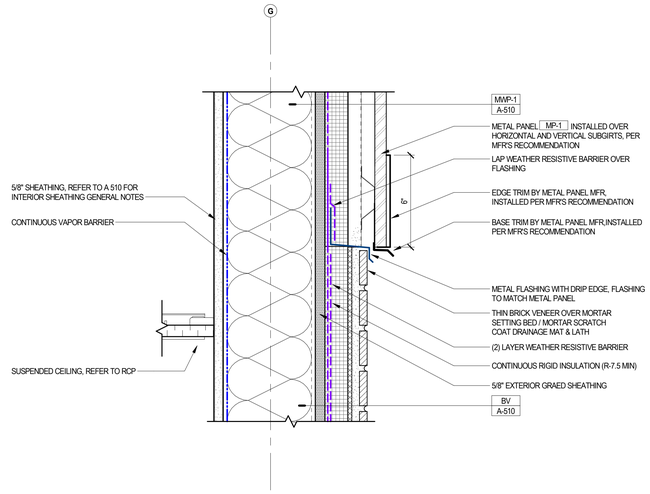


## EXTERIOR SECTION DETAIL - BRICK/MWP TRANSITION

3" = 1'-0" 8

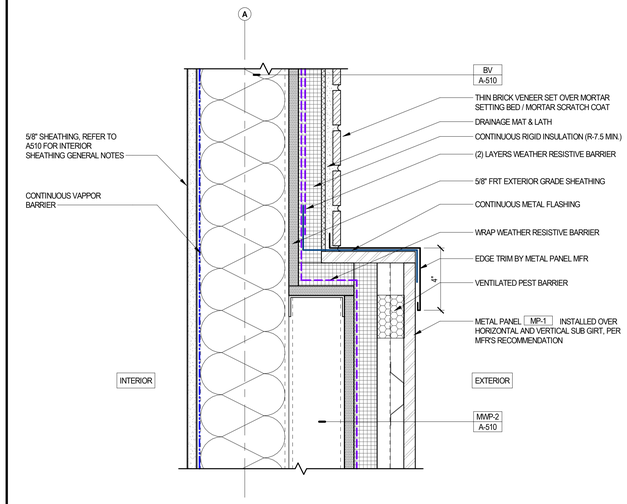


## EXTERIOR SECTION DETAIL - DOUBLE STUD TO BRICK

3" = 1'-0" 7

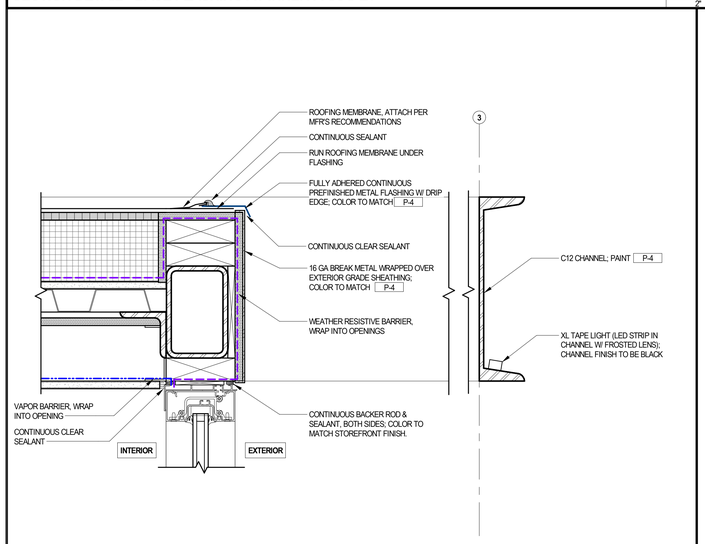


## EXTERIOR SECTION DETAIL - CANOPY ROOF EDGE

3" = 1'-0" 6

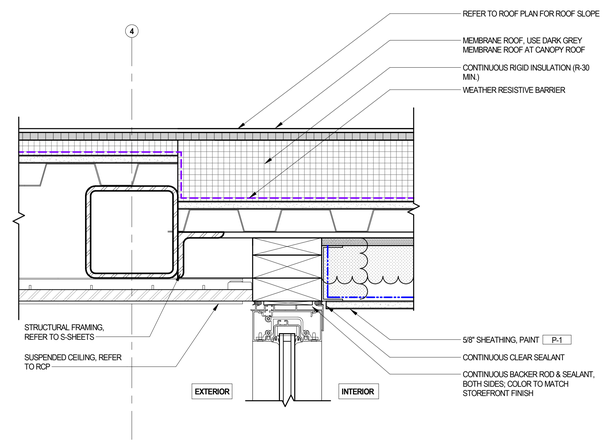


## EXTERIOR SECTION DETAIL - CANOPY EDGE @ VESTIBULE

3" = 1'-0" 5

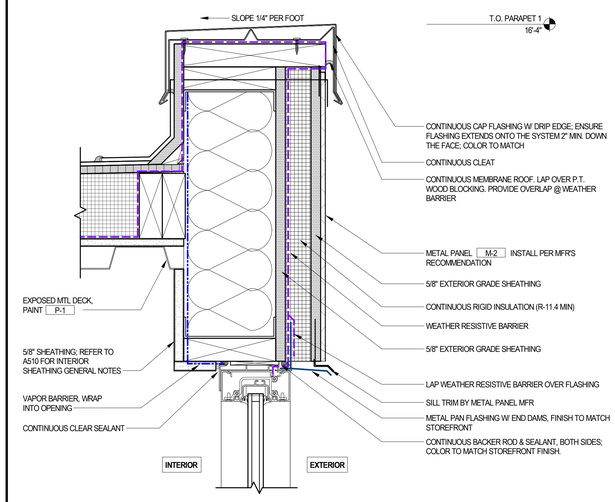


## EXTERIOR SECTION DETAIL - LOW PARAPET

3" = 1'-0" 4

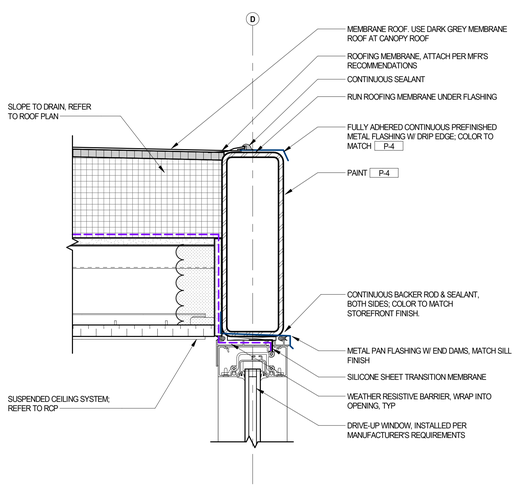


## EXTERIOR DETAIL - DRIVE UP HEADER

3" = 1'-0" 3

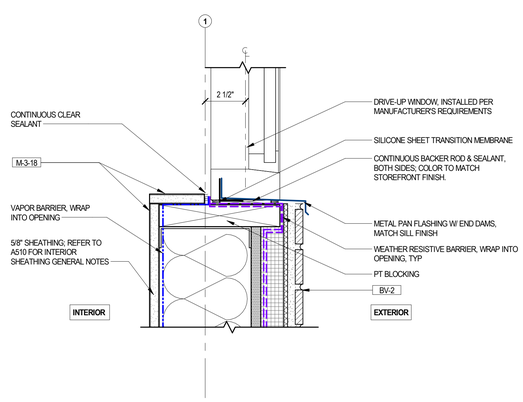


## EXTERIOR DETAIL - DRIVE-UP WINDOW SILL

3" = 1'-0" 2

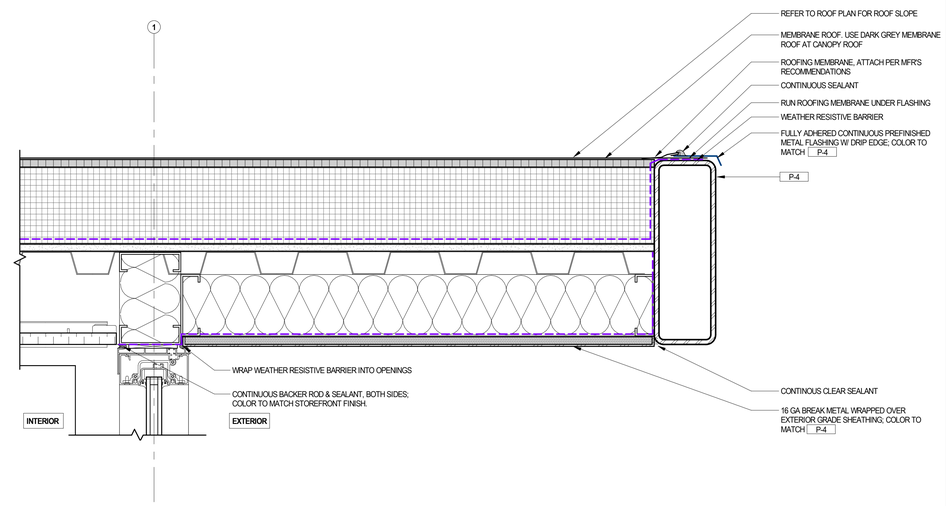


## EXTERIOR SECTION DETAIL - VESTIBULE ROOF

3" = 1'-0" 1

Bergmeyer
BOS - 51 Sleeper St. 6th Floor Boston, MA 02210 617.542.1025
LA - 800 South Figueroa St. Suite 1060 Los Angeles, CA 90017 212.337.1090
www.bergmeyer.com

CONSULTANTS:

SEAL/ SIGNATURE:

| NO. | BY | DATE | DESCRIPTION |
|---|---|---|---|
| | | 2021-01-11 | PERMIT/BID SET |
| | | 2020-12-21 | 75% SET |

SHAKE SHACK

SHAKE SHACK - LEE'S SUMMIT MO

2051 NW LOWENSTEIN DRIVE
LEE'S SUMMIT, MISSOURI 64081
SHACK #1348

PERMIT/BID SET

EXTERIOR DETAILS - SECTION

| | |
|---|---|
| DRAWN BY: | CS & WQL |
| CHECKED BY: | JS |
| JOB NO: | 20068.00 |

A503

1/11/2021 6:08:27 PM C:\Users\djevine\Documents\308_Shake Shack-Lee's Summit_Central_djevine@bergmeyer.com.rvt

RELEASE FOR CONSTRUCTION
AS NOTED ON PLANS REVIEW
DEVELOPMENT SERVICES
LEE'S SUMMIT, MISSOURI
03/10/2021

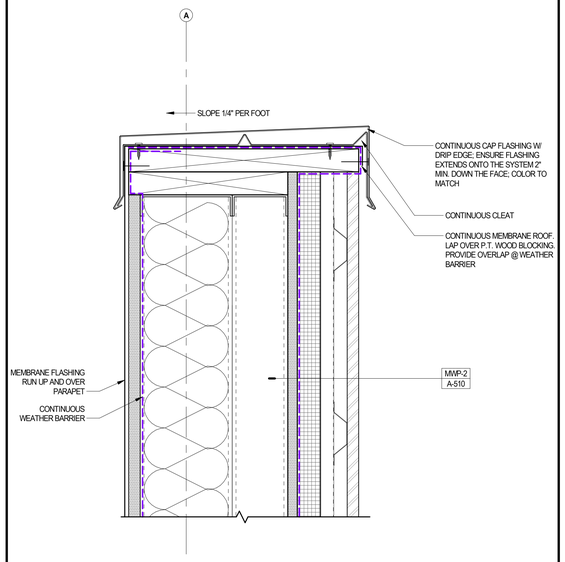


EXTERIOR DETAIL - PARAPET @ MWP-2 — 3" = 1'-0" — 2

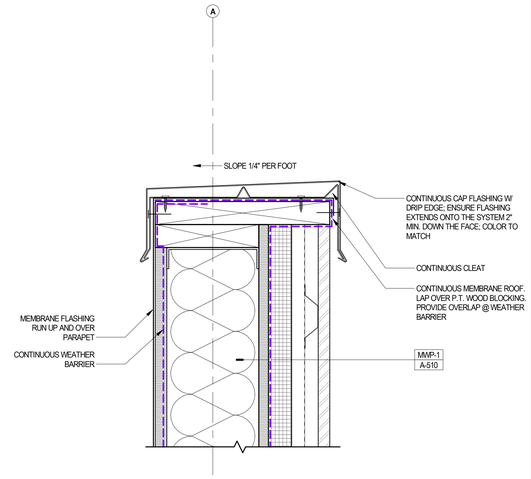


EXTERIOR SECTION DETAIL - PARAPET @ MWP-1 — 3" = 1'-0" — 3

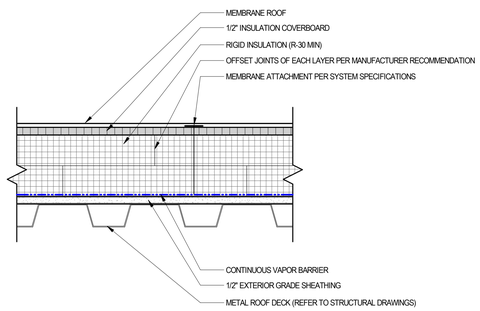


TYPICAL ROOF ASSEMBLY — 3" = 1'-0" — 10

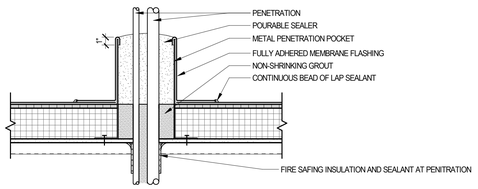


DETAIL - PIPE PENETRATION — 1 1/2" = 1'-0" — 7

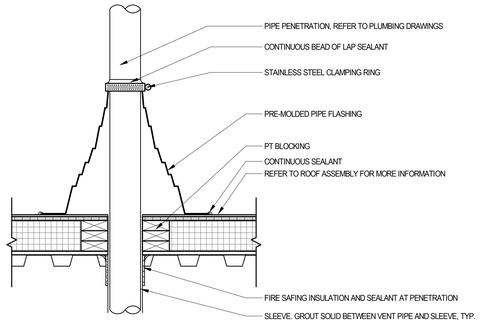


DETAIL - VENT PIPE — 1 1/2" = 1'-0" — 4

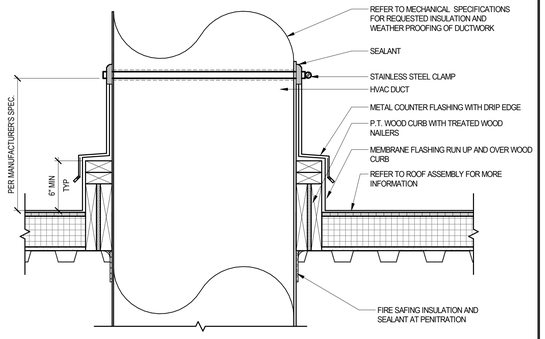


ROOF DETAIL - DUCT PENETRATION — 1 1/2" = 1'-0" — 9

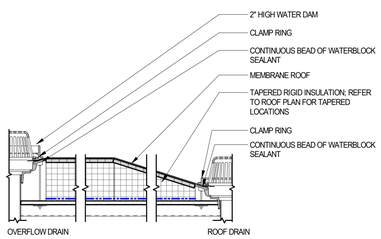


NOTES:
1. COORDINATE WITH PLUMBING DRAWINGS

DETAIL- ROOF DRAIN — 1 1/2" = 1'-0" — 5

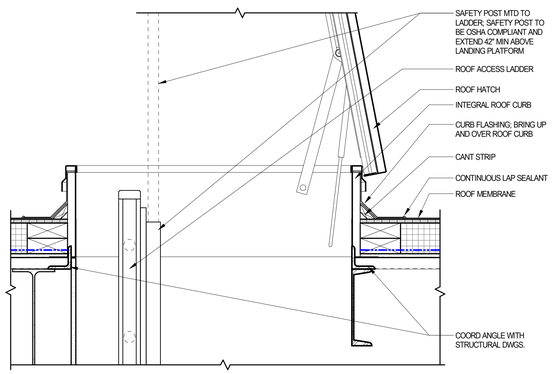


DETAIL - ROOF HATCH — 1 1/2" = 1'-0" — 1

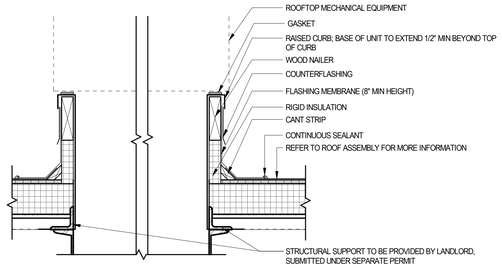


NOTES:
1. THE CURBS, TOP WOOD NAILER, AND GASKETS ARE TO BE SUPPLIED BY THE CURB MANUFACTURER
2. MECHANICAL UNITS SHOULD NOT BE SET UNTIL THE ROOF MEMBRANE AND FLASHING HAVE BEEN INSTALLED

DETAIL - TYP EQUIPMENT CURB — 1 1/2" = 1'-0" — 8

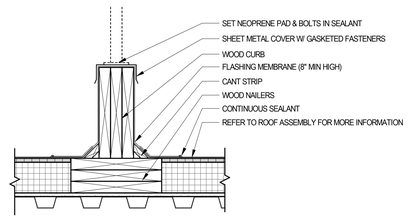


| WIDTH OF EQUIPMENT | HEIGHT OF LEGS |
|---|---|
| UP TO 24" | 24" |
| 24" TO 48" | 36" |
| 48" AND WIDER | 48" |

NOTES:
1. THIS DETAIL ALLOWS FOR MEMBRANE MAINTENANCE AROUND THE SUPPORTED EQUIPMENT. A MINIMUM OF 2 FEET OF HORIZONTAL CLEARANCE MUST BE PROVIDED FOR REMOVAL AND REPLACEMENT OF ROOFING AND FLASHING BETWEEN PARALLEL SUPPORTS. **REFER TO THE TABLE TO THE LEFT FOR RECOMMENDATIONS ON VERTICAL CLEARANCE FROM ROOF SURFACE TO BOTTOM OF SUPPORTED EQUIPMENT.**

DETAIL - EQUIPMENT CURB @ CONDENSERS — 1 1/2" = 1'-0" — 6

Bergmeyer
BOS - 51 Sleeper St. 6th Floor Boston, MA 02210 617.542.1025
LA - 800 South Figueroa St. Suite 1060 Los Angeles, CA 90017 212.337.1090
www.bergmeyer.com

CONSULTANTS:

SEAL/ SIGNATURE:

| NO. | BY | DATE | DESCRIPTION |
|---|---|---|---|
| | | 2021-01-11 | PERMIT/BID SET |

SHAKE SHACK

SHAKE SHACK - LEE'S SUMMIT MO

2051 NW LOWENSTEIN DRIVE
LEE'S SUMMIT, MISSOURI 64081
SHACK #1348

PERMIT/BID SET

EXTERIOR DETAILS - ROOF

DRAWN BY: CS & WQL
CHECKED BY: JS
JOB NO: 20068.00

A504

C:\Users\djevine\Documents\068_Shake Shack-Lee's Summit_Central_djevine@bergmeyer.com.rvt
1/11/2021 6:08:33 PM

RELEASE FOR CONSTRUCTION
AS NOTED ON PLANS REVIEW
DEVELOPMENT SERVICES
LEE'S SUMMIT, MISSOURI
03/10/2021

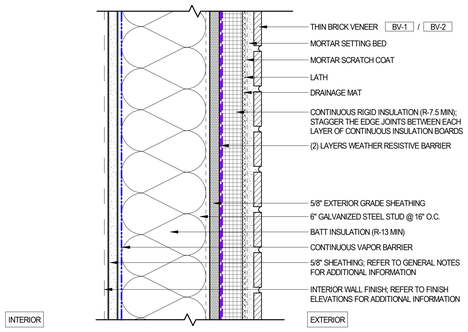


SECTION

**THIN BRICK @ SINGLE STUD** — 3" = 1'-0" (2" 4" 8") — **BV**

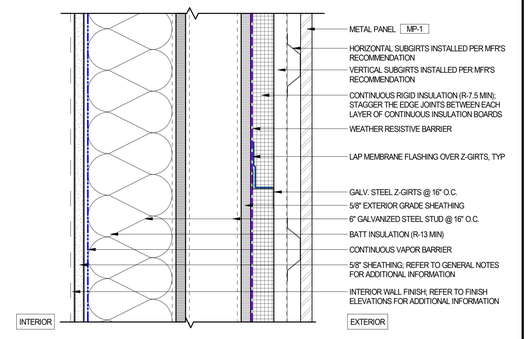


SECTION

**METAL WALL PANEL @ DOUBLE STUD** — 3" = 1'-0" (2" 4" 8") — **MWP-2**

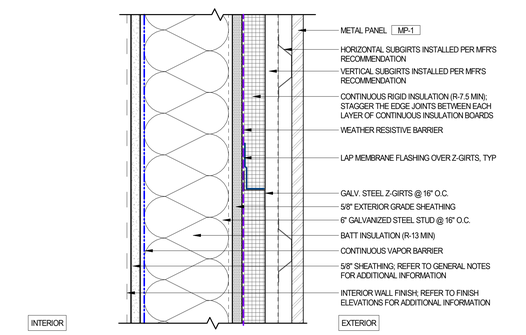


SECTION

**METAL WALL PANEL @ SINGLE STUD** — 3" = 1'-0" (2" 4" 8") — **MWP-1**

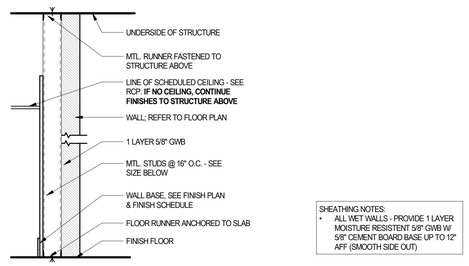


SHEATHING NOTES:
- ALL WET WALLS - PROVIDE 1 LAYER MOISTURE RESISTENT 5/8" GWB W/ 5/8" CEMENT BOARD BASE UP TO 12" AFF (SMOOTH SIDE OUT)

| | |
|---|---|
| 9 | FURRING WALL |
| 9A | 3 5/8" METAL STUD |

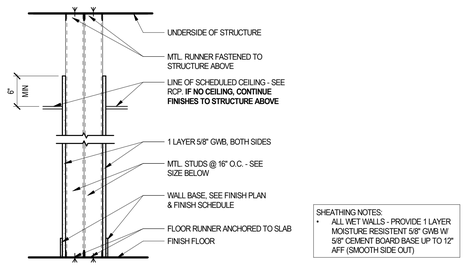


SHEATHING NOTES:
- ALL WET WALLS - PROVIDE 1 LAYER MOISTURE RESISTENT 5/8" GWB W/ 5/8" CEMENT BOARD BASE UP TO 12" AFF (SMOOTH SIDE OUT)

| | |
|---|---|
| 8 | DOUBLE STUD PARTITION |
| 8A | 6" METAL STUDS |

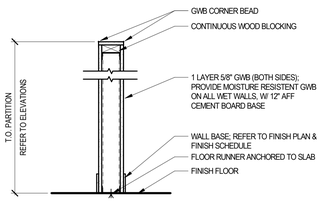


| | |
|---|---|
| 7 | PARTIAL HEIGHT PARTITION |
| 7A | 3 5/8" METAL STUD (SHEATHING BOTH SIDES) |
| 7B | 6" METAL STUD (SHEATHING BOTH SIDES) |
| 7C | 3 5/8" METAL STUD (SHEATHING ONE SIDE) |

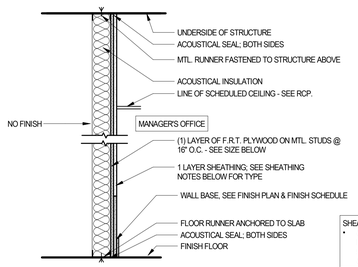


SHEATHING NOTES:
- ALL WET WALLS - PROVIDE 1 LAYER MOISTURE RESISTENT 5/8" GWB W/ 5/8" CEMENT BOARD BASE UP TO 12" AFF (SMOOTH SIDE OUT)

| | |
|---|---|
| 6 | SINGLE STUD PARTITION - MANAGER'S OFFICE |
| 6A | 2 1/2" METAL STUD |

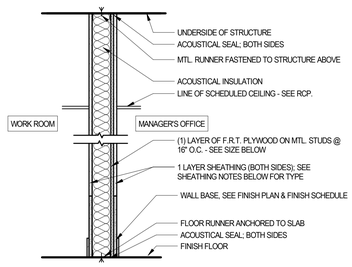


SHEATHING NOTES:
- ALL WET WALLS - PROVIDE 1 LAYER MOISTURE RESISTENT 5/8" GWB W/ 5/8" CEMENT BOARD BASE UP TO 12" AFF (SMOOTH SIDE OUT)

| | |
|---|---|
| 5 | SINGLE STUD PARTITION - MANAGER'S OFFICE |
| 5A | 3 5/8" METAL STUD |
| 5B | 6" METAL STUD |

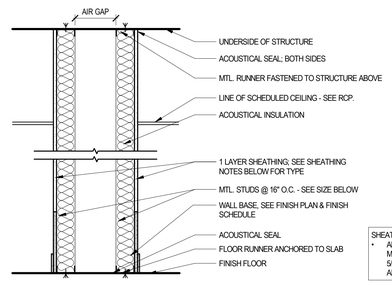


SHEATHING NOTES:
- ALL WET WALLS - PROVIDE 1 LAYER MOISTURE RESISTENT 5/8" GWB W/ 5/8" CEMENT BOARD BASE UP TO 12" AFF (SMOOTH SIDE OUT)

| | |
|---|---|
| 4 | DOUBLE STUD PARTITION W/ AIR GAP |
| 4A | 3 5/8" METAL STUDS W/ 8-1/2" (MIN) AIR GAP |
| 4B | 3 5/8" METAL STUDS W/ 8" (MIN) AIR GAP |

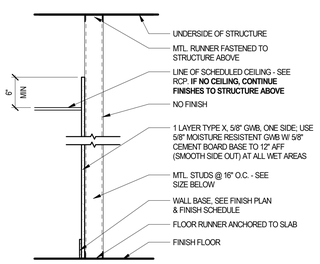


SHEATHING NOTES:
- ALL WET WALLS - PROVIDE 1 LAYER MOISTURE RESISTENT 5/8" GWB W/ 5/8" CEMENT BOARD BASE UP TO 12" AFF (SMOOTH SIDE OUT)

| | |
|---|---|
| 3 | SINGLE STUD PARTITION |
| 3A | 3 5/8" METAL STUD |
| 3B | 6" METAL STUD |
| 3C | 2 1/2" METAL STUD |

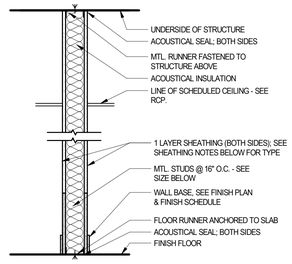


SHEATHING NOTES:
- ALL WET WALLS - PROVIDE 1 LAYER MOISTURE RESISTENT 5/8" GWB W/ 5/8" CEMENT BOARD BASE UP TO 12" AFF (SMOOTH SIDE OUT)

| | |
|---|---|
| 2 | SINGLE STUD PARTITION - SOUND RESISTANT |
| 2A | 3 5/8" METAL STUD |
| 2B | 6" METAL STUD |

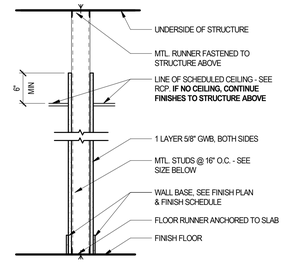


SHEATHING NOTES:
- ALL WET WALLS - PROVIDE 1 LAYER MOISTURE RESISTENT 5/8" GWB W/ 5/8" CEMENT BOARD BASE UP TO 12" AFF (SMOOTH SIDE OUT)

| | |
|---|---|
| 1 | SINGLE STUD PARTITION |
| 1A | 3 5/8" METAL STUD |
| 1B | 6" METAL STUD |

## GENERAL NOTES

01. ALL GWB TO BE CUT TO FIT TIGHT AROUND PENETRATIONS SUCH AS PIPES, DUCTS, CONDUIT, CABLES, ETC. ALL PENETRATIONS OF FIRE RATED PARTITIONS SHALL BE SEALED WITH FIRESTOP SEALANT, ALL OTHER PENETRATIONS TO BE SEALED WITH ACOUSTICAL SEALANT.

02. ALL PARTITIONS CONTAINING SOUND ATTENUATION BLANKETS, THERMAL INSULATION OR FIRESTOPPING INSULATION SHALL BE SEALED ON ALL SIDES, TOP AND BOTTOM AS DESIGNATED BY PARTITION TYPE.

03. ALL PARTITIONS WITH SINKS AND/OR "WET EQUIPMENT", ALL WALLS IN TOILET ROOMS, AND ALL WALLS IN KITCHEN AREAS TO HAVE 5/8" MOISTURE RESISTENT GWB WITH A 5/8" CEMENT BOARD BASE (SMOOTH SIDE OUT) TO 12" AFF, U.N.O. IN NOTES OR DETAILS.

04. NON LOAD-BEARING WALLS DO NOT NEED TO GO TO THE UNDERSIDE OF DECK / STRUCTURE ABOVE. ALL PARTITIONS THAT TERMINATE ABOVE THE CEILING AND DO NOT EXTEND TO THE STRUCTURE ABOVE SHALL HAVE DIAGONAL BRACING.

05. REVIEW DRAWINGS, PROVIDE BRACING AND BLOCKING IN PARTITIONS AS REQUIRED. ALL BLOCKING SHALL BE FIRE RETARDANT TREATED (FRT).

06. ALL FIRE RATED ASSEMBLIES SHALL BE CONSTRUCTED IN ACCORDANCE WITH THE APPROPRIATE UL DESIGN NUMBER INDICATED FOR THAT PARTITION TYPE.

07. COLUMNS AND BEAMS SUPPORTING RATED CONSTRUCTION SHALL BE RATED TO MATCH THE CONSTRUCTION BEING SUPPORTED.

08. STEEL BRACING WITHIN PARTITIONS SHALL HAVE SPRAY FIREPROOFING.

09. VENEER PLASTER FINISH ON ALL CURVED GWB SURFACES UNLESS NOTED OTHERWISE.

10. ALL PARTITIONS AT CERAMIC TILE OR ACRYLIC PANELS SHALL BE CEMENTITOUS BACKER BOARD.

11. ALL PARTITIONS IN MANAGER'S OFFICE TO HAVE 5/8" F.R.T. PLYWOOD SHEATHING, EXTENDED TO UNDERSIDE OF STRUCTURE.

12. PAINT ALL PLYWOOD P-4 IN FRONT OF HOUSE AREAS.

13. ALL PLYWOOD SHEATHING TO BE FIRE-RETARDANT-TREATED WOOD

Bergmeyer
BOS - 51 Sleeper St. 6th Floor Boston, MA 02210 617.542.1025
LA - 800 South Figueroa St. Suite 1060 Los Angeles, CA 90017 212.337.1090
www.bergmeyer.com

CONSULTANTS:

SEAL/ SIGNATURE:

| NO. | BY | DATE | DESCRIPTION |
|---|---|---|---|
| | | 2021-01-11 | PERMIT/BID SET |
| | | 2020-12-21 | 75% SET |

SHAKE SHACK

SHAKE SHACK - LEE'S SUMMIT MO

2051 NW LOWENSTEIN DRIVE
LEE'S SUMMIT, MISSOURI 64081
SHACK #1348

PERMIT/BID SET

WALL TYPES

| | |
|---|---|
| DRAWN BY: | CS & WQL |
| CHECKED BY: | JS |
| JOB NO: | 20068.00 |

A510

C:\Users\jdevine\Documents\068_Shake Shack-Lee's Summit_Central_jdevine@bergmeyer.com.rvt
1/11/2021 6:08:32 PM

RELEASE FOR CONSTRUCTION
AS NOTED ON PLANS REVIEW
DEVELOPMENT SERVICES
LEE'S SUMMIT, MISSOURI
03/10/2021

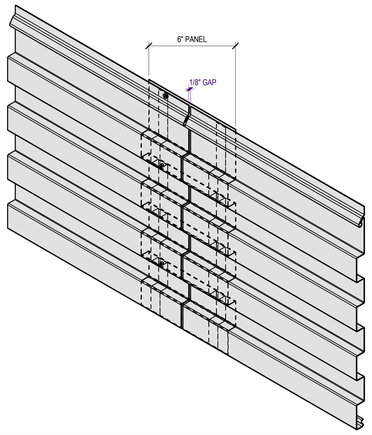


TYPICAL SPLICE DETAIL — NOT TO SCALE — 11

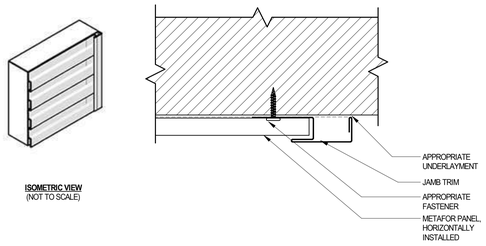


PLAN DETAIL - TRIM @ END OF EXTERIOR METAL PANEL — 6" = 1'-0" — 10

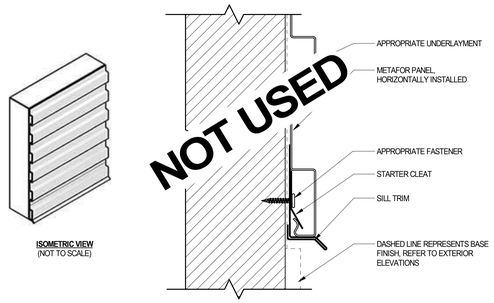


DETAIL - EXTERIOR BASE & SILL — 6" = 1'-0" — 9

| OUTLET BOX | | | | |
|---|---|---|---|---|
| # OF OUTLET | COVER SIZE | COVER HEIGHT | COVER SKU | BASE SKU |
| SINGLE | 7.750 INCH | 8.000 INCH | MFA694 | MFA691 |
| DOUBLE | 9.875 INCH | 8.000 INCH | MFA695 | MFA692 |
| TRIPLE | 12.000 INCH | 8.000 INCH | MFA696 | MFA693 |

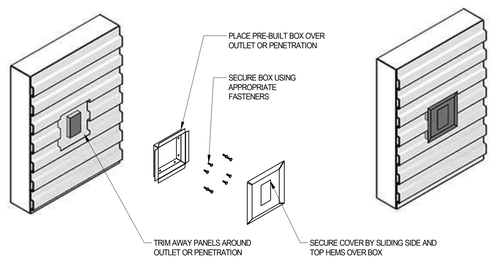


TRIM DETAIL — NOT TO SCALE — 8

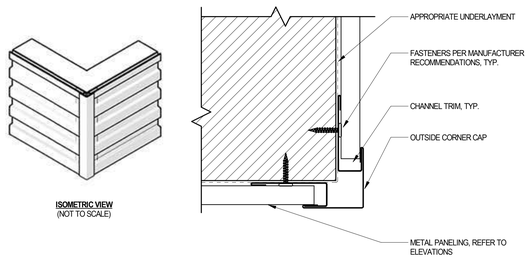


PLAN DETAIL - CORNER @ METAL PANELS — 6" = 1'-0" — 7

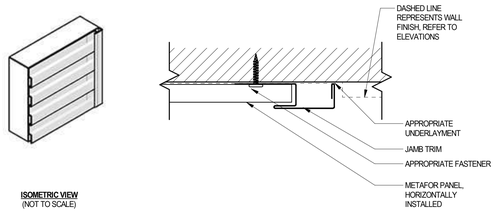


PLAN DETAIL - TRIM @ END OF METAL PANEL — 6" = 1'-0" — 6

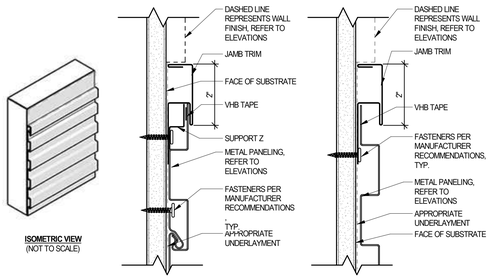


DETAIL - HEADER DETAIL @ SOFFIT — 6" = 1'-0" — 5

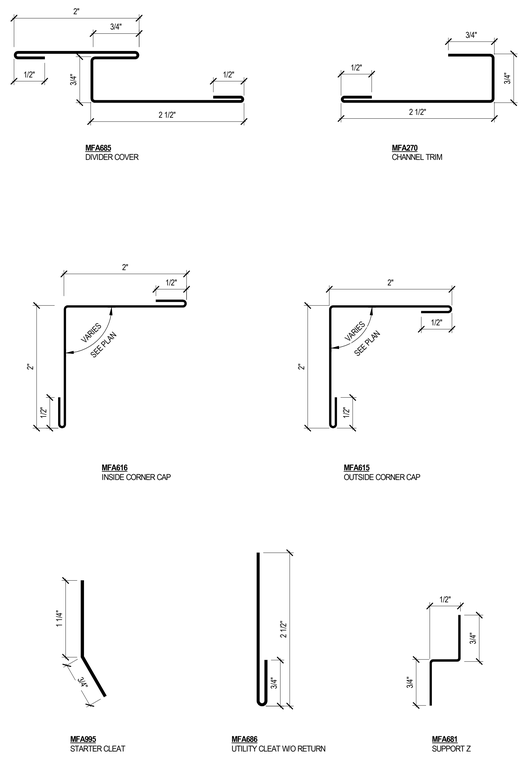


DETAIL - METAFOR PROFILES — 12" = 1'-0" — 1

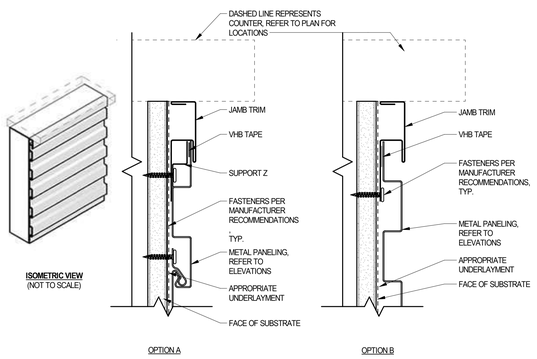


DETAIL - HEADER DETAIL @ COUNTER — 6" = 1'-0" — 4

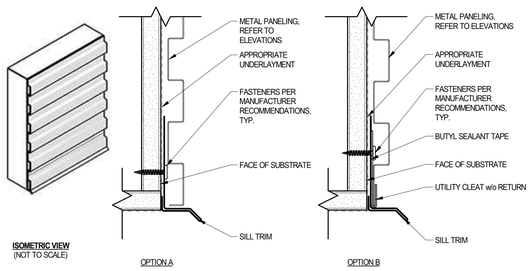


DETAIL - SOFFIT DETAIL @ CORRUGATED METAL PANEL — 6" = 1'-0" — 3

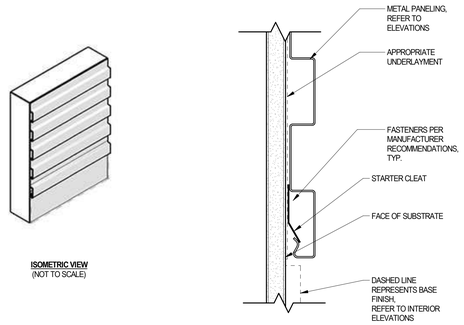


DETAIL - CORRUGATED METAL PANEL BASE — 6" = 1'-0" — 2

Bergmeyer
BOS - 51 Sleeper St. 6th Floor Boston, MA 02210 617.542.1025
LA - 800 South Figueroa St. Suite 1060 Los Angeles, CA 90017 212.337.1090
www.bergmeyer.com

CONSULTANTS:

SEAL/ SIGNATURE:

| NO. | BY | DATE | DESCRIPTION |
|---|---|---|---|
| | | 2021-01-11 | PERMIT/BID SET |
| | | 2020-12-21 | 75% SET |

SHAKE SHACK

SHAKE SHACK - LEE'S SUMMIT MO

2051 NW LOWENSTEIN DRIVE
LEE'S SUMMIT, MISSOURI 64081
SHACK #1348

PERMIT/BID SET

ATAS METAL PANEL TRIM DETAILS

| | |
|---|---|
| DRAWN BY: | CS & WQL |
| CHECKED BY: | JS |
| JOB NO: | 20068.00 |

A520

C:\Users\jevine\Documents\006_Shake Shack Lee's Summit_Central_jevine@bergmeyer.com.rvt
10/12/2021 6:08:34 PM

RELEASE FOR CONSTRUCTION
AS NOTED ON PLANS REVIEW
DEVELOPMENT SERVICES
LEE'S SUMMIT, MISSOURI
03/10/2021

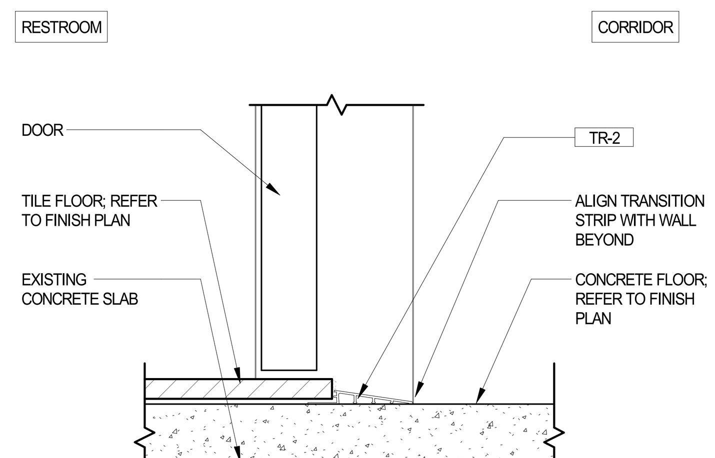

RESTROOM TILE

**TRANSITION - CONCRETE TO TILE** | 3" = 1'-0" | 25

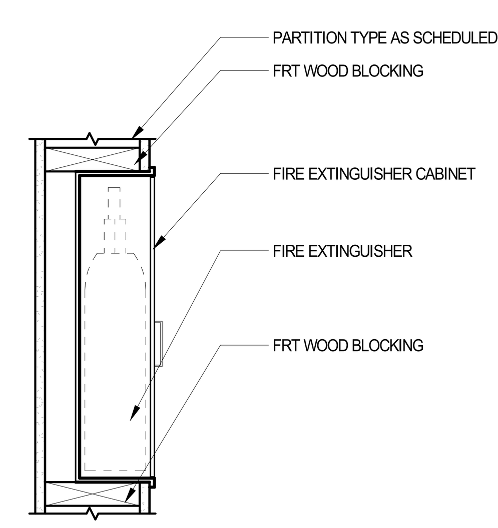

SECTION @ FIRE EXTINGUISHER CABINET

**DETAIL** | 1 1/2" = 1'-0" | 24

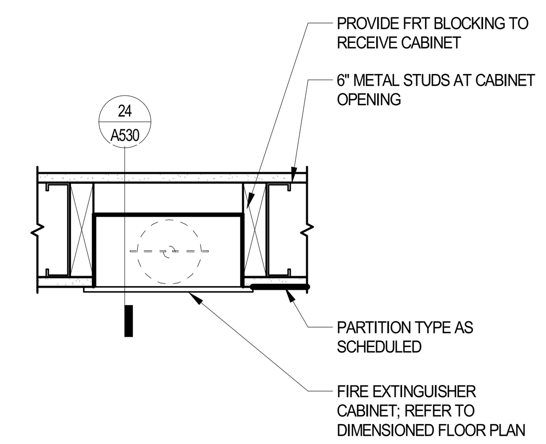

FIRE EXTINGUISHER CABINET

**PLAN DETAIL** | 1 1/2" = 1'-0" | 23

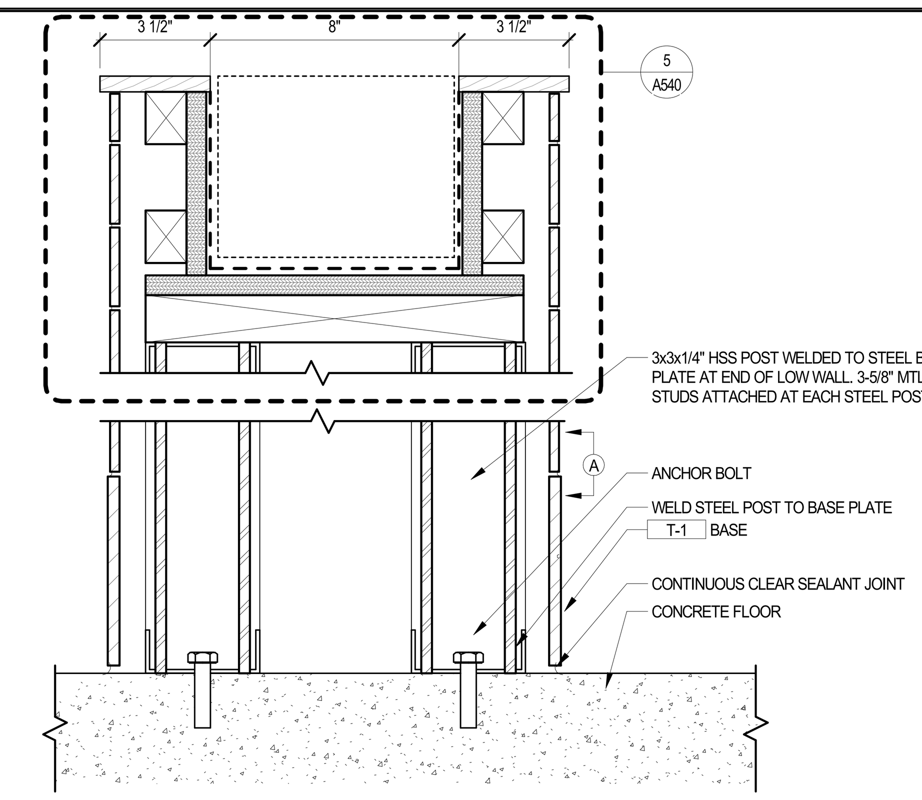


**DETAIL - LOW WALL SECTION** | 3" = 1'-0" | 22

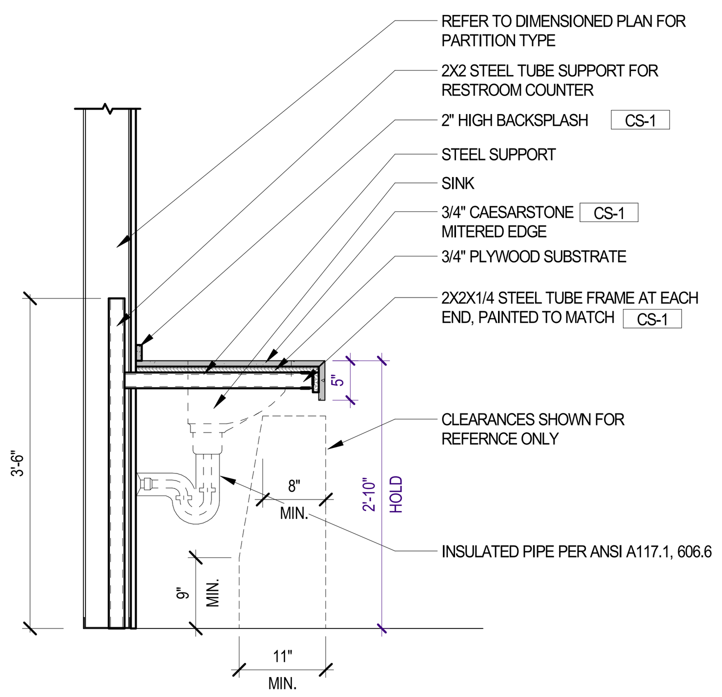


**SECTION DETAIL - VANITY** | 3/4" = 1'-0" | 20

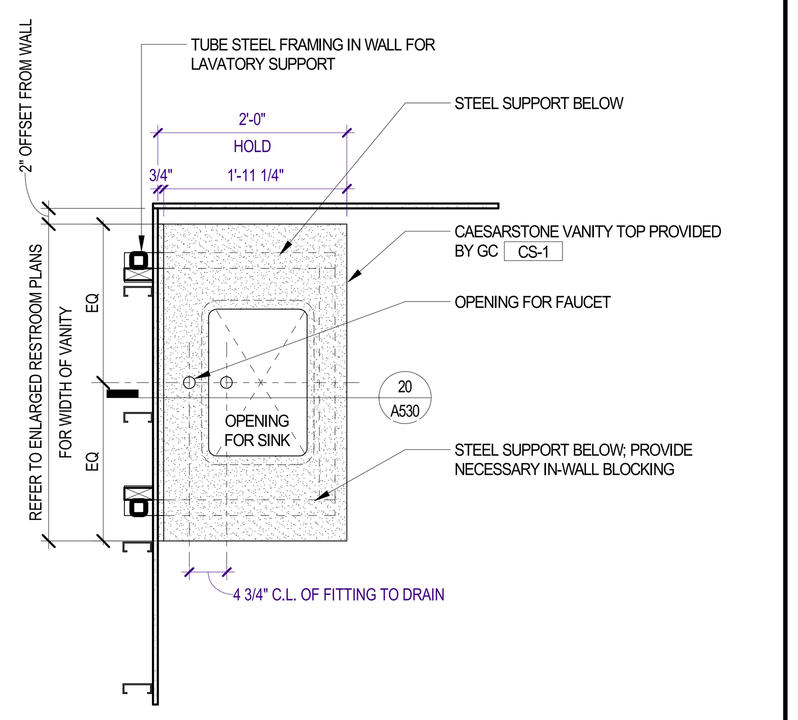


**PLAN DETAIL - VANITY** | 3/4" = 1'-0" | 19

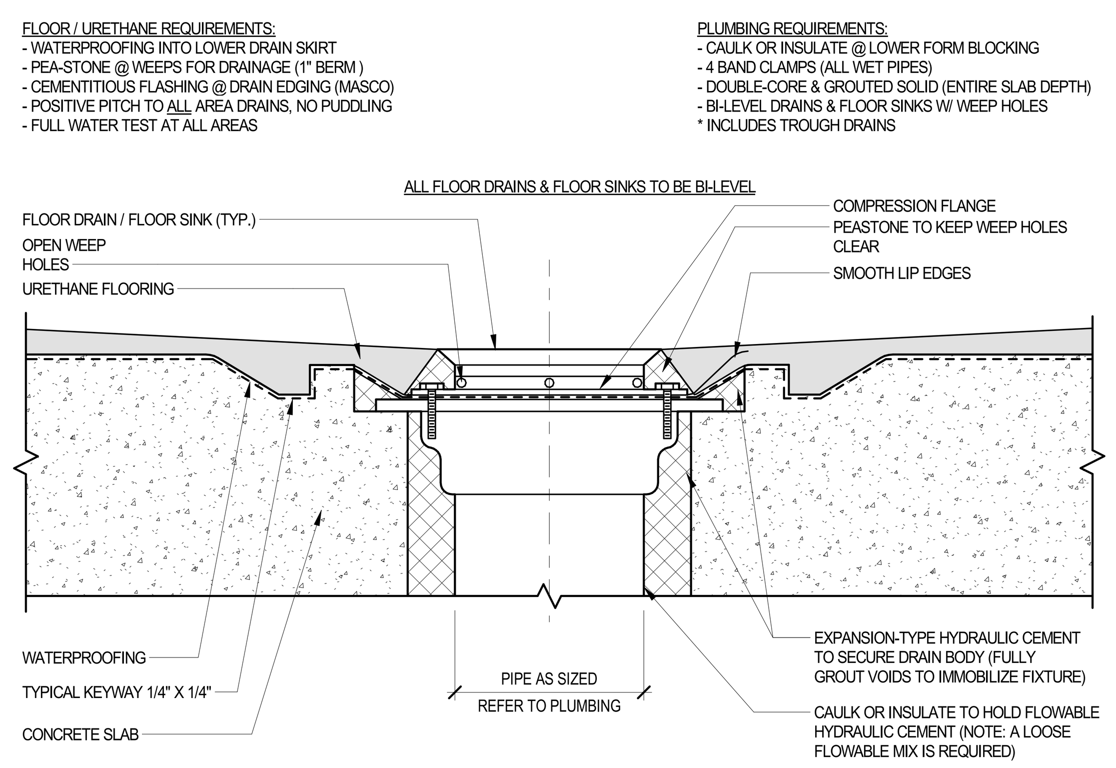


**DETAIL - FLOOR DRAIN / FLOOR SINK** | 3" = 1'-0" | 18

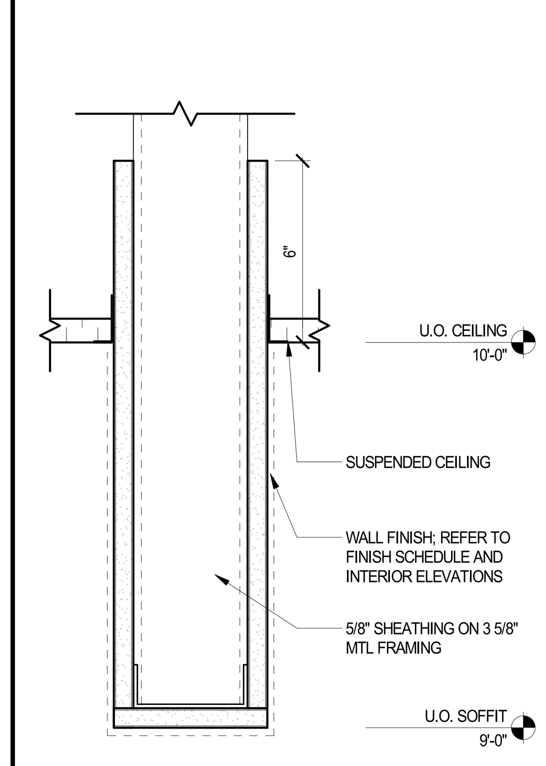

SOFFIT @ WORKROOM

**DETAIL** | 3" = 1'-0" | 17

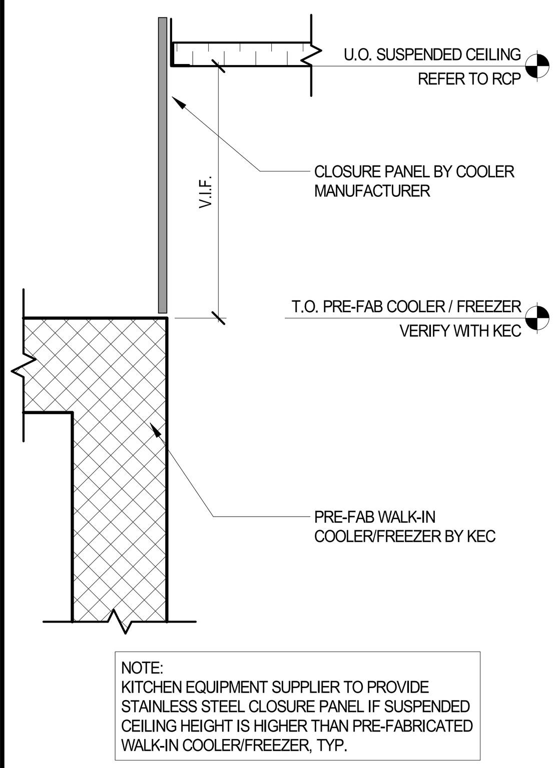

WALK-IN CEILING PANEL

**DETAIL** | 3" = 1'-0" | 16

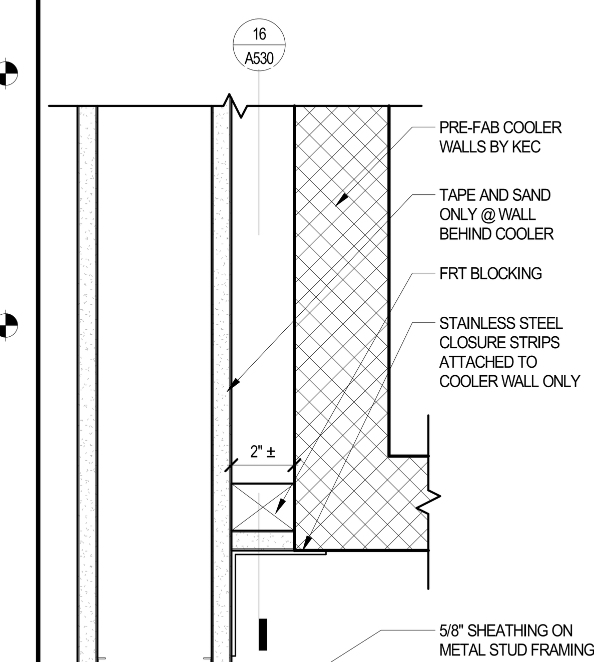

WALK-IN COOLER

**PLAN DETAIL** | 3" = 1'-0" | 15

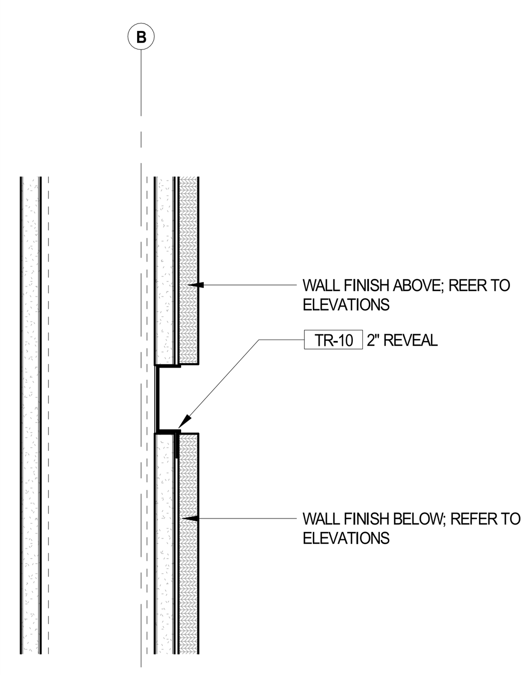

@ ATAS & WOOD

**DETAIL** | 3" = 1'-0" | 14

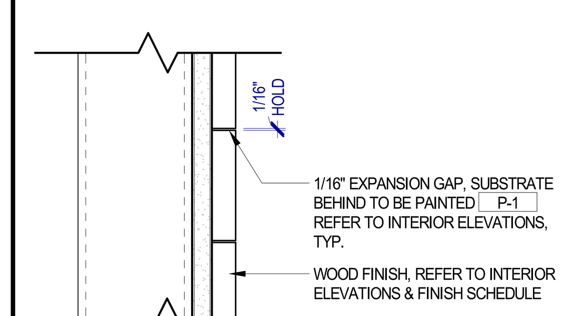

WOOD GAP

**DETAIL** | 3" = 1'-0" | 13

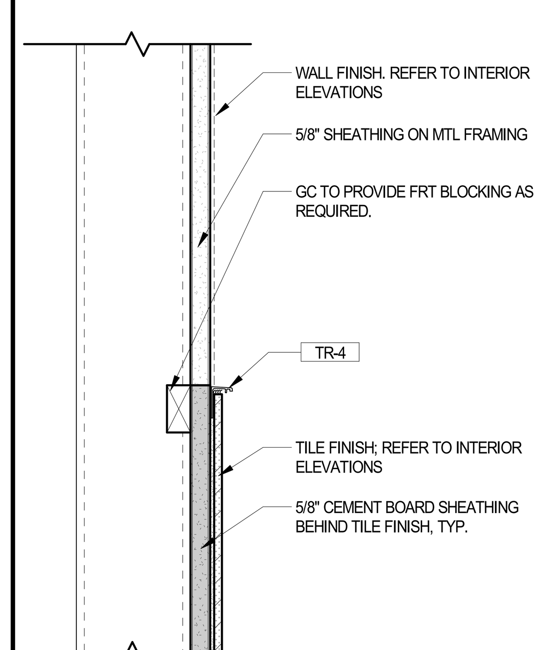

TILE TERMINATION

**DETAIL** | 3" = 1'-0" | 12

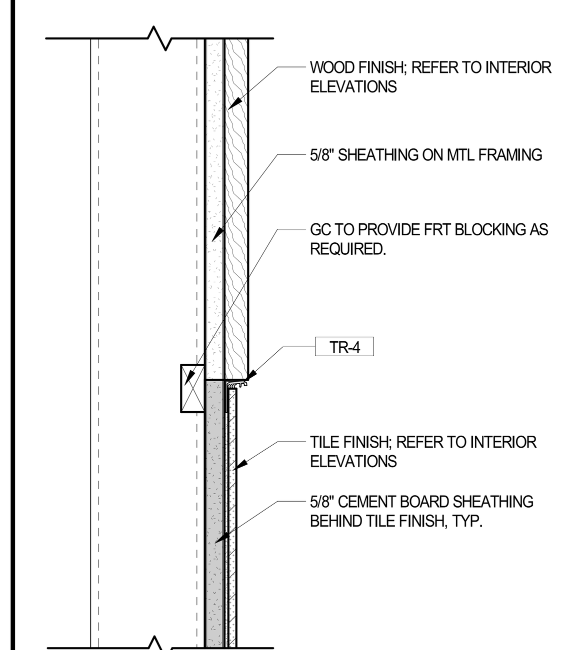

FINISH TERMINATION IN DINING

**DETAIL** | 3" = 1'-0" | 11

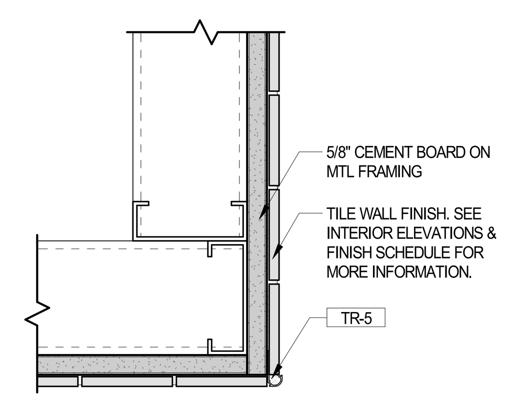

TILE @ OUTSIDE CORNERS

**PLAN DETAIL** | 3" = 1'-0" | 10

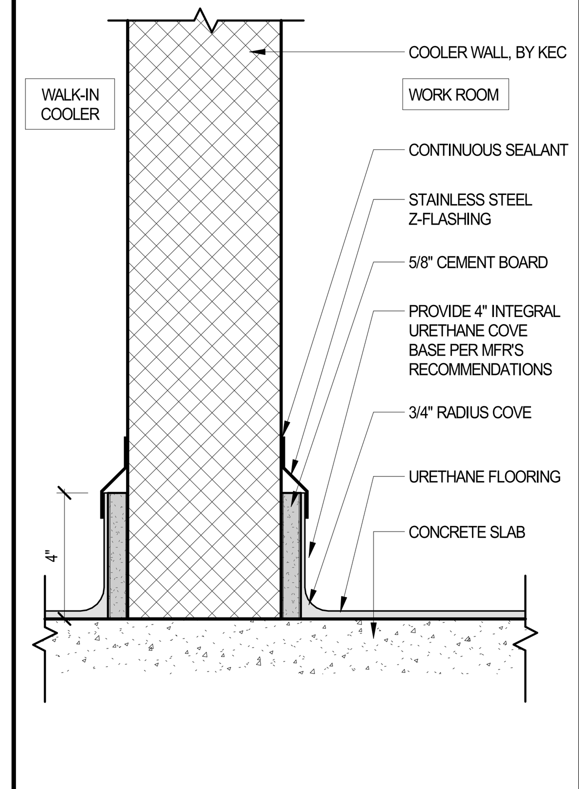

URETHANE BASE @ WALK-IN

**BASE DETAIL** | 3" = 1'-0" | 9

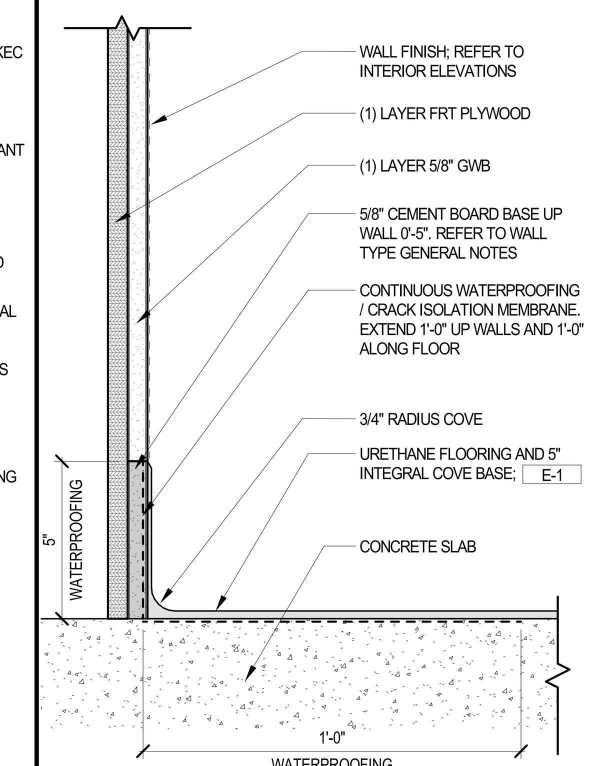

URETHANE BASE @ OFFICE

**BASE DETAIL** | 3" = 1'-0" | 8

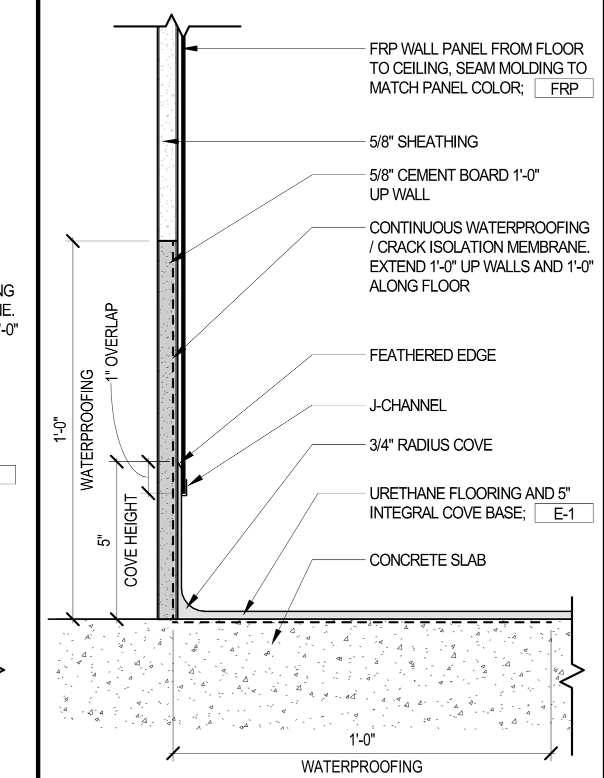

URETHANE BASE

**BASE DETAIL** | 3" = 1'-0" | 7

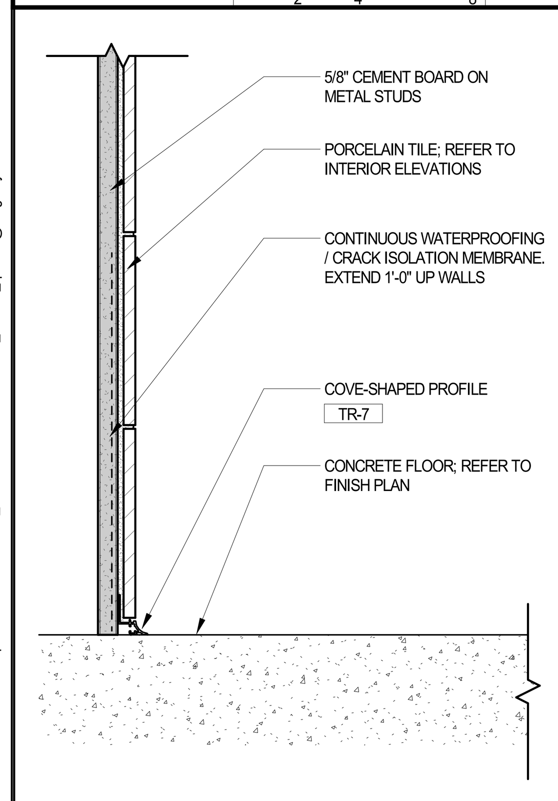

TILE BASE @ RESTROOMS

**BASE DETAIL** | 3" = 1'-0" | 6

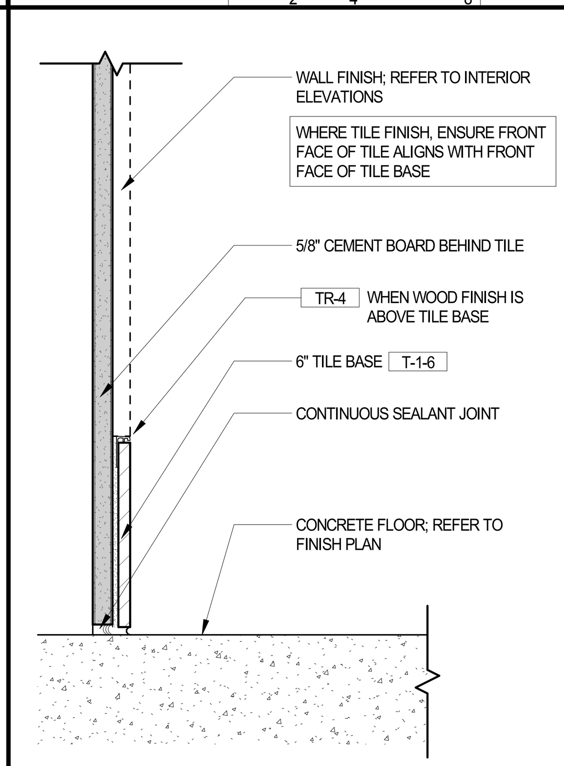

TILE BASE @ DINING

**BASE DETAIL** | 3" = 1'-0" | 5

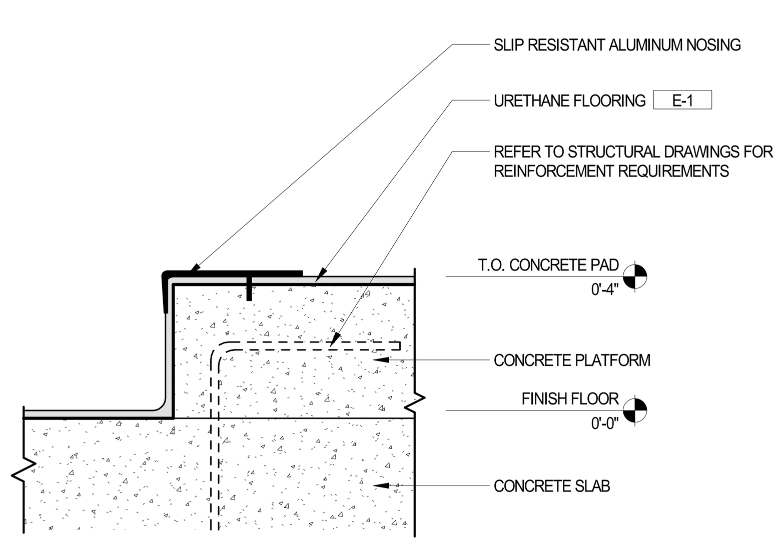


**DETAIL - CONC. EQUIPMENT PAD** | 3" = 1'-0" | 4

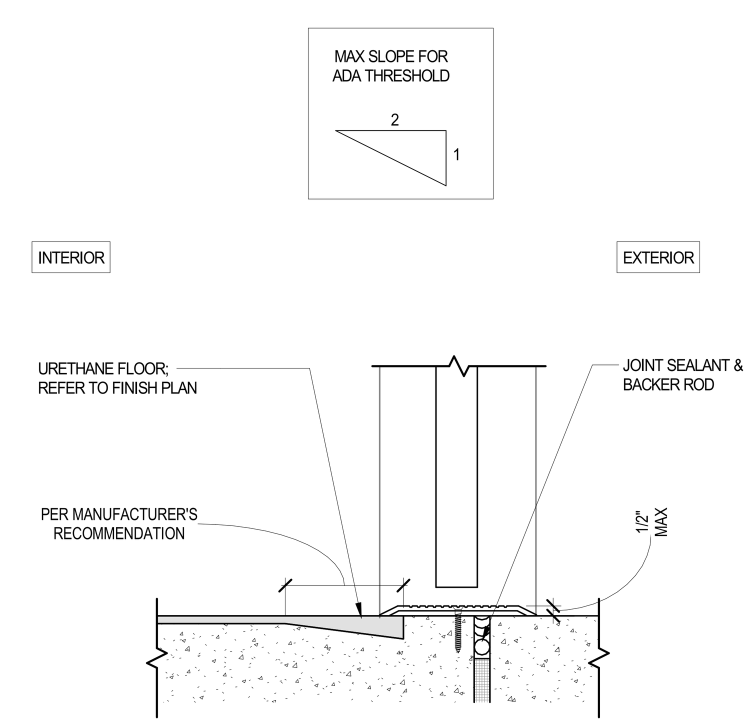


**TRANSITION - BOH DOOR** | 3" = 1'-0" | 3

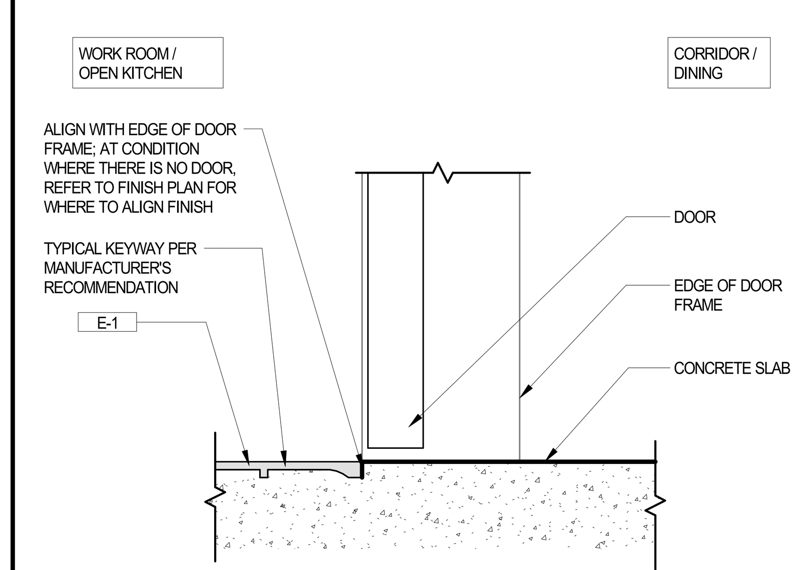


**TRANSITION - CONC. TO URETHANE** | 3" = 1'-0" | 2

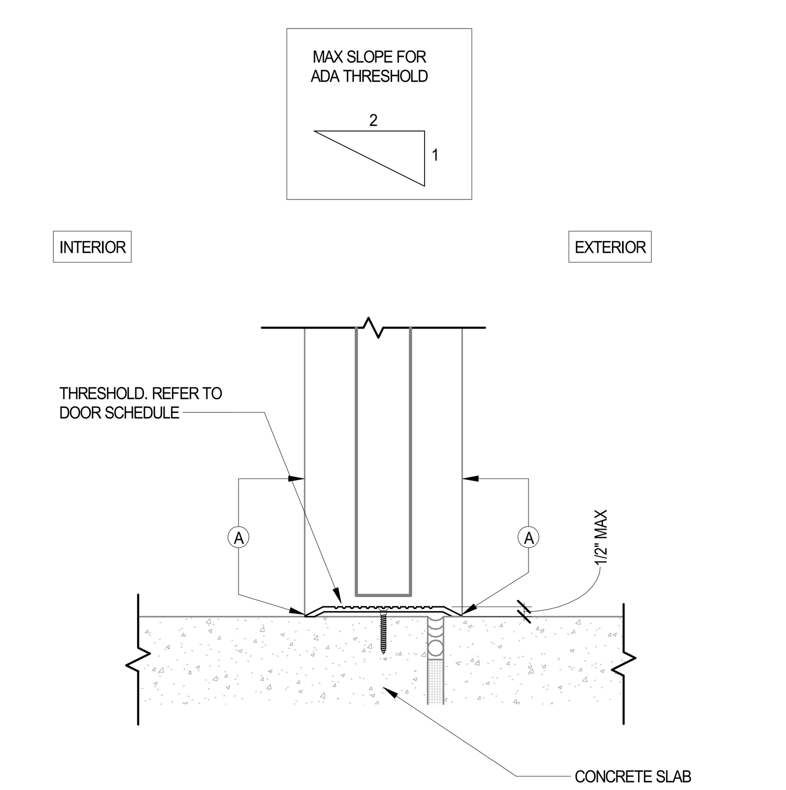


**TRANSITION - EXTERIOR DOOR** | 3" = 1'-0" | 1


Bergmeyer

BOS
51 Sleeper St.
6th Floor
Boston, MA 02210
617.542.1025

LA
800 South Figueroa St.
Suite 1080
Los Angeles, CA 90017
212.337.1090

www.bergmeyer.com


CONSULTANTS:

SEAL/ SIGNATURE:

| NO. | BY | DATE | DESCRIPTION |
|---|---|---|---|
| | | 2021-01-11 | PERMIT/BID SET |
| | | 2020-12-21 | 75% SET |

SHAKE SHACK

SHAKE SHACK - LEE'S SUMMIT MO

2051 NW LOWENSTEIN DRIVE
LEE'S SUMMIT, MISSOURI 64081
SHACK #1348

PERMIT/BID SET

INTERIOR DETAILS

DRAWN BY: CS & WQL
CHECKED BY: JS
JOB NO: 20068.00

# A530


C:\Users\qlevine\Documents\068_Shake Shack-Lee's Summit_Central_qlevine@bergmeyer.com.rvt
1/11/2021 6:08:38 PM

RELEASE FOR CONSTRUCTION
AS NOTED ON PLANS REVIEW
DEVELOPMENT SERVICES
LEE'S SUMMIT, MISSOURI
03/10/2021

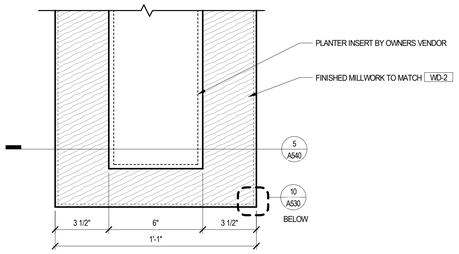


**PLAN DETAIL - PLANTER** 3" = 1'-0" **7**

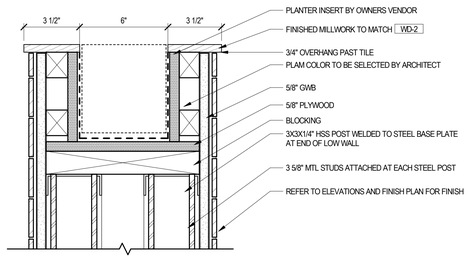


**SECTION THROUGH PLANTER** 3" = 1'-0" **5**

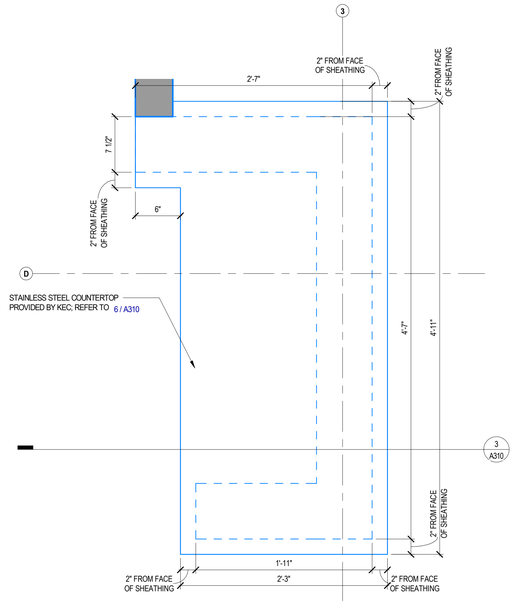


**PLAN DETAIL - PICKUP COUNTER** 1 1/2" = 1'-0" **6**

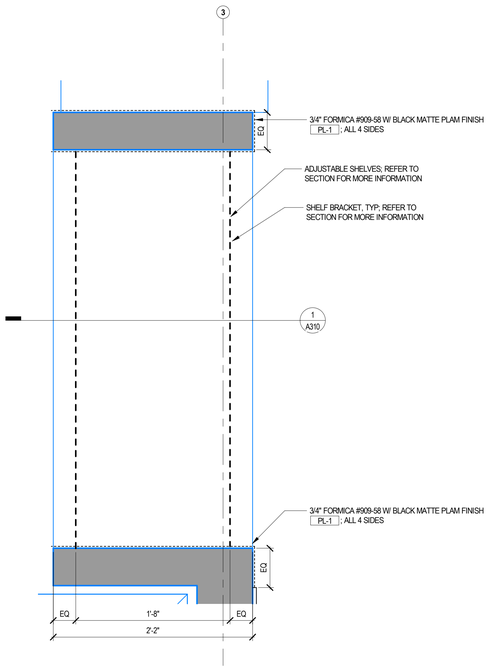


**PLAN DETAIL- PICKUP SHELVING** 1 1/2" = 1'-0" **4**

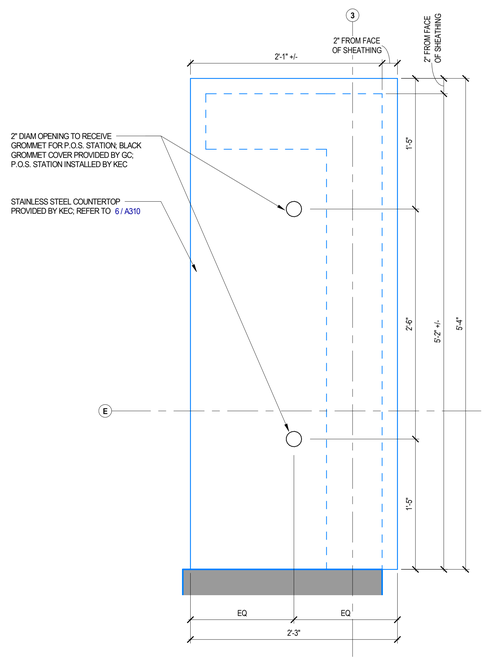


**PLAN DETAIL- ORDER COUNTER** 1 1/2" = 1'-0" **3**

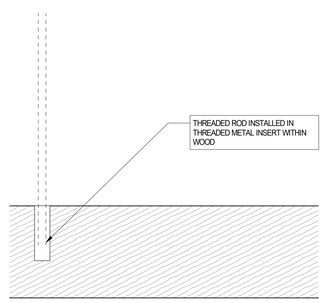


**SECTION DETAIL - MILLWORK HANGER ROD** 3" = 1'-0" **2**

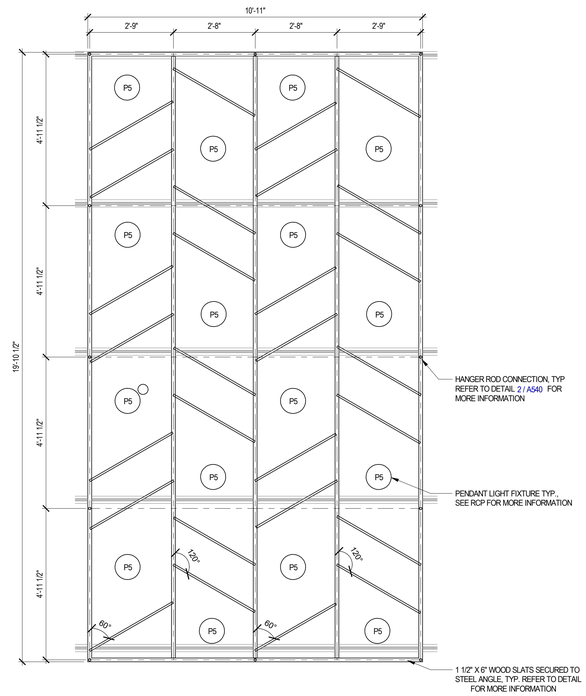


**ENLARGED REFLECTED CEILING PLAN - MILLWORK CLOUD** 1/2" = 1'-0" (1'-0" 2'-0" 4'-0") **1**


Bergmeyer
BOS - 51 Sleeper St. 6th Floor Boston, MA 02210 617.542.1025
LA - 800 South Figueroa St. Suite 1060 Los Angeles, CA 90017 212.337.1090
www.bergmeyer.com


CONSULTANTS:

SEAL/ SIGNATURE:

| NO. | BY | DATE | DESCRIPTION |
|---|---|---|---|
| | | 2021-01-11 | PERMIT/BID SET |
| | | 2020-12-21 | 75% SET |

SHAKE SHACK

SHAKE SHACK - LEE'S SUMMIT MO

2051 NW LOWENSTEIN DRIVE
LEE'S SUMMIT, MISSOURI 64081
SHACK #1348

PERMIT/BID SET

MILLWORK DETAILS

DRAWN BY: CS & WQL
CHECKED BY: JS
JOB NO: 20068.00

A540

C:\Users\jdevine\Documents\068_Shake Shack-Lee's Summit_Central_jdevine@bergmeyer.com.rvt
1/11/2021 6:08:41 PM

RELEASE FOR CONSTRUCTION
AS NOTED ON PLANS REVIEW
DEVELOPMENT SERVICES
LEE'S SUMMIT, MISSOURI
03/10/2021

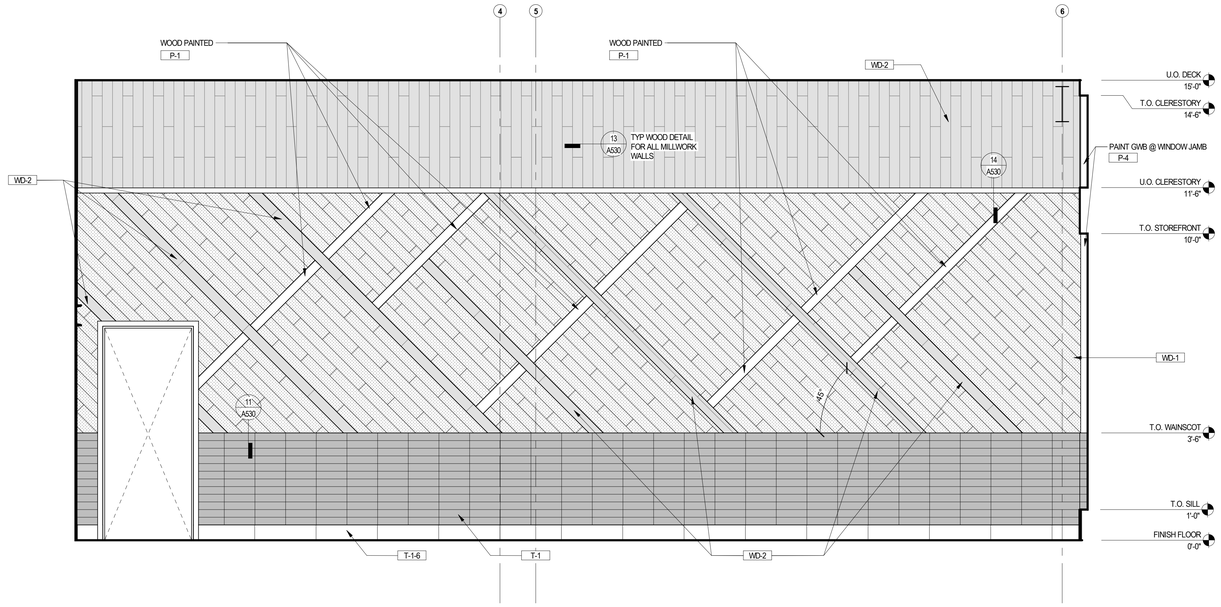


## ENLARGED FINISH ELEVATION

1/2" = 1'-0"
1'-0" 2'-0" 4'-0"

1

## FINISH SCHEDULE

| TAG NO. | TYPE | MANUFACTURER | STYLE/MODEL | COLOR | LEAD TIME | COMMENTS |
|---|---|---|---|---|---|---|
| CEILING | | | | | | |
| C-2 | ACOUSTIC CEILING BOARD | ARMSTRONG | TECTUM CEILING PANELS | WHITE | | APPLIED TO EXPOSED CEILING DECK IN FOH AREAS FOR SOUND ABSORPTION |
| C-10 | VINYL-FACED CEILING TILE | USG | 24" X 48" SHEETROCK BRAND LAY-IN CEILING PANEL VINYL: ITEM#3270 | WHITE | | GRID: USG DXLA 15/16" WHITE T-GRID FOR WASHABLE TILE |
| EXTERIOR FINISHES | | | | | | |
| BV-1 | BRICK VENEER | ELDORADO STONE | TUNDRA BRICK - THIN BRICK VENEER | IRONSIDE | 5 WEEKS | FLUSHED BRUSHED MORTAR JOINT, STANDARD GRAY |
| BV-2 | BRICK VENEER | ELDORADO STONE | TUNDRABRICK - THIN BRICK VENEER | CHALK DUST | 3-4 MONTHS | FLUSHED BRUSHED MORTAR JOINT, STANDARD WHITE |
| MP-1 | METAL PANEL | ATAS | OPW 4 1/2", CONCEALED FASTENER | ASCOT WHITE | | |
| MP-1-B | WALL PANEL | ATAS | FLAT METAL PANEL | TO MATCH PMS 369 C | | |
| MP-2 | METAL PANEL | ARMSTRONG | METALWORKS LINEAR PLANKS, EXTERIOR, 4" WIDE PLANKS | EFFECTS OAK | | |
| FLOORING | | | | | | |
| E-1 | URETHANE FLOORING SYSTEM | DUR-A-FLEX | POLY-CRETE MDB | GREY | | W/ TF PLUS TOP COAT |
| EM-2 | ENTRY MAT | MATS INC | LEGEND: LOOSE LAY MAT | - | | MAT TO BE WIDTH OF ENTRY DOORS |
| PC-2 | CONCRETE SCREED | L.M. SCOFIELD CO. | POLISHED CONCRETE | 1266 COOL GREY | | SEE NOTE 1 |
| T-1-24 | PORCELAIN TILE | CREATIVE MATERIALS CORP. | CEMENTING; SIZE: 24" X 24" | BLACK, NATURAL FINISH | | GROUT: LATICRETE 60, DUSTY GREY; |
| VF-1 | VINYL FLOORING | OSCODA PLASTICS | PROTECT-ALL FLOORING | DARK GRAY | | UNDER THE WALK-IN COOLER ONLY, SEE VENDOR LIST FOR CONTACT |
| METAL PANELS | | | | | | |
| M-1-E | ALUMINUM CORRUGATED PANEL | ATAS | METAPHOR PROFILE | BONE WHITE (26) | | |
| M-2 | METAL PANEL | ATAS | STERRACORE | PVDF BLACK | | |
| M-3-18 | STAINLESS STEEL WALL PANEL | - | 18 GAUGE BRUSHED FINISH | TYPE 304 SATIN STAINLESS STEEL | | FURNISHED & INSTALLED BY GC |
| MISC. | | | | | | |
| CS-1 | QUARTZ | CAESARSTONE | #2003; THICKNESS: 3/4" | CONCRETE | | REFER TO RESTROOM VANITY DETAIL |
| MISCELLANEOUS | | | | | | |
| GL-1 | GLASS | - | 1/4" THICK TEMPERED CLEAR MONOLITHIC GLASS | CLEAR | | INSTALL WF-1 ON CUSTOMER SIDE OF GLASS |
| PL-1 | LAMINATE | - | FORMICA #909-58 | MATTE BLACK | | APPLY MATCHING EDGEBAND WHERE APPLICABLE |
| WF-1 | WINDOW FILM | SOLAR GARD | PANORAMA SLATE 40 FILM | - | | INSTALLED ON CUSTOMER SIDE OF GLASS @ KITCHEN ENGINE |

| TAG NO. | TYPE | MANUFACTURER | STYLE/MODEL | COLOR | LEAD TIME | COMMENTS |
|---|---|---|---|---|---|---|
| WALL BASE AND TRIM | | | | | | |
| T-1-6 | PORCELAIN TILE | CREATIVE MATERIALS CORP. | CEMENTING; SIZE: 6" X 24" | BLACK, NATURAL FINISH | | GROUT: LATICRETE 60, DUSTY GREY; |
| T-1-12 | PORCELAIN TILE | CREATIVE MATERIALS CORP. | CEMENTING; SIZE: 12" X 24" | BLACK, NATURAL FINISH | | GROUT: LATICRETE 60, DUSTY GREY; |
| TR-2 | TRANSITION | SCHLUTER | RENO-RAMP, 2 1/2" | SATIN ANODIZED ALUMINUM | | |
| TR-4 | EDGE-PROTECTION PROFILE | SCHLUTER | JOLLY | ALUMINUM FINISH W/ BLACK JOINT | | |
| TR-5 | EDGE-PROTECTION PROFILE | SCHLUTER | RONDEC | MATERIAL: ALUMINUM, FINISH: BRIGHT BLACK ANODIZED | | |
| TR-7 | COVE-SHAPED PROFILE | SCHLUTER | DILEX-AHKA | MATERIAL: ALUMINUM, FINISH: BRUSHED GRAPHITE ANODIZED ALUMINUM (AGRB) | | |
| TR-10 | DRYWALL F REVEAL | FRY REGLET | DRMF-625-200 | POWDERCOAT BLACK | | |
| WALL FINISHES | | | | | | |
| FRP | FIBERGLASS REINFORCED PANEL | MARLITE | STANDARD P100, SMOOTH FINISH | WHITE | | |
| P-1 | PAINT | SHERWIN WILLIAMS | SW7005 | PURE WHITE | | |
| P-2 | PAINT | SHERWIN WILLIAMS | SW7064 | PASSIVE | | |
| P-4 | PAINT | SHERWIN WILLIAMS | SW7069 | IRON ORE | | |
| T-1 | PORCELAIN TILE | CREATIVE MATERIALS CORP. | PIECES, DEPTH; SIZE: 3" X 12" | CHARCOAL | 6-8 WEEKS | GROUT: LATICRETE 60, DUSTY GREY; 1/8" JOINTS |
| T-3 | PORCELAIN TILE | CREATIVE MATERIALS CORP. | CHROMA; SIZE: 2" X 10" | WHITE, GLOSSY | | GROUT: LATICRETE 89 SMOKE GREY; 1/8" JOINTS |
| T-4 | PORCELAIN TILE | CREATIVE MATERIALS CORP. | CHROMA; SIZE: 2" X 10" | EVERGREEN, GLOSSY | | GROUT: LATICRETE 89 SMOKE GREY; 1/8" JOINTS |
| T-14 | PORCELAIN TILE | CREATIVE MATERIALS CORP. | TUNE | WHITE PITCH | | GROUT: LATICRETE 44, BRIGHT WHITE; 1/8" JOINTS |
| WD-1 | WOOD FINISH | PIONEER MILLWORKS | WOOD PLANK - WIDE PLANK | ASH - SILVER FOX | | |
| WD-2 | WOOD FINISH | PIONEER MILLWORKS | WOOD PLANK - WIDE PLANK | MIXED OAK, BLACK & TAN - TAN | | |

NOTES:

1. **POLISHED CONCRETE PC-3**
   - 1 PASS 80 GRIT METAL BOND PAD (TO ACHIEVE SALT & PEPPER)
   - 1 PASS 150 GRIT METAL BOND PAD
   - 1 PASS 100 GRIT RESIN BOND PAD
   - 1 PASS 200 GRIT RESIN BOND PAD
   - 1 PASS 400 GRIT RESIN BOND PAD
   - 1 PASS 800 GRIT RESIN BOND PAD
   - CONSOLIDECK POLISHED GUARD PROTECTIVE COATING
   - CLEAR CONCRETE SEALER; CURECRETE CHEMICAL ASHFORD FORMULA, ONE COAT; ZERO VOC'S

## GENERAL NOTES

A. CHECK LEAD TIMES ON ALL TILES. SOME MAY HAVE A 6-8 WEEK LEAD TIME.
B. TILE INSTALLER TO VERIFY ALIGNMENT OF GROUT LINES OF WALL AND FLOOR TILE PRIOR TO INSTALLATION.
C. THE G.C. IS TO OBTAIN CONTROL SAMPLE FOR WOOD PANELING FROM TENANT'S DESIGNER.
D. USE EXTERIOR GRADE FINISHES AT ALL FLOORING, WALL, AND CEILING APPLICATIONS.
E. AT ALL TILE TRANSITIONS (EDGES, CORNERS, ETC.) WHERE APPLICABLE, PROVIDE STAINLESS STEEL SCHLUTER TRIM PIECES AND ACCESSORIES.
F. ALL INTERIOR FINISHES TO HAVE A FLAME SPREAD RATING AS INDICATED ON SHEET 1-001

Bergmeyer
BOS - 51 Sleeper St. 6th Floor Boston, MA 02210 617.542.1025
LA - 800 South Figueroa St. Suite 1060 Los Angeles, CA 90017 212.337.1090
www.bergmeyer.com

CONSULTANTS:

SEAL/ SIGNATURE:

| NO. | BY | DATE | DESCRIPTION |
|---|---|---|---|
| | | 2021-01-11 | PERMIT/BID SET |
| | | 2020-12-21 | 75% SET |
| | | 2020-10-12 | DD SET |

SHAKE SHACK

SHAKE SHACK - LEE'S SUMMIT MO

2051 NW LOWENSTEIN DRIVE
LEE'S SUMMIT, MISSOURI 64081
SHACK #1348

PERMIT/BID SET

FINISH SCHEDULE

DRAWN BY: CS & WQL
CHECKED BY: JS
JOB NO: 20068.00

A601

C:\Users\devine\Documents\088_Shake Shack-Lee's Summit_Central_devine@bergmeyer.com.rvt
1/11/2021 6:08:46 PM

RELEASE FOR CONSTRUCTION
AS NOTED ON PLANS REVIEW
DEVELOPMENT SERVICES
LEE'S SUMMIT, MISSOURI
03/10/2021

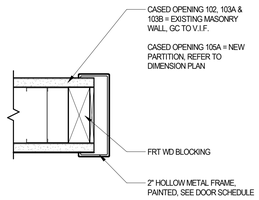


HM JAMB / HEADER @ CASED OPENING

**DETAIL** 3" = 1'-0" **4**

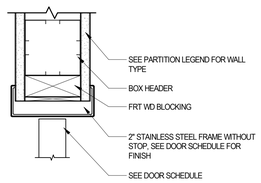


DOUBLE ACTING DOOR: HEADER

**DETAIL** 3" = 1'-0" **3**

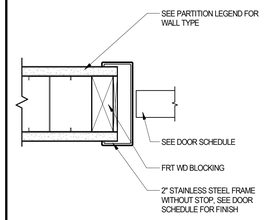


DOUBLE ACTING DOOR: JAMB

**DETAIL** 3" = 1'-0" **2**

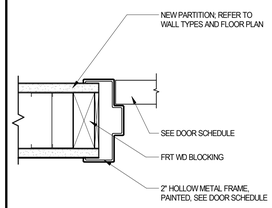


HM JAMB / HEADER

**DETAIL** 3" = 1'-0" **1**

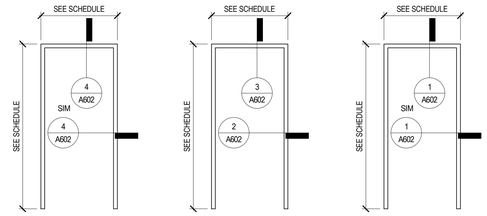


**TYPE 3: HOLLOW METAL FRAME, CASED OPENING**

**TYPE 2: STAINLESS STEEL FRAME, DOUBLE ACTING DOOR**

**TYPE 1: HOLLOW METAL FRAME**

## FRAME TYPES

## HARDWARE SCHEDULE

**SET # 01 - EXTERIOR PAIR WITH SURFACE VERTICAL ROD PANIC HARDWARE**

| | | | | | |
|---|---|---|---|---|---|
| 1 EA | THRESHOLD | ZERO | 655A | A | |
| 2 EA | CONT. HINGE | IVES | 700 | 630 | CONTINUOUS HINGE |
| 2 EA | OH STOP & HOLDER | GLY | 100H ADJ | 630 | OVERHEAD HOLDER AT OPENING |
| 2 EA | PANIC HARDWARE | VON | CD3347A-L-06 | 313 | |
| 2 EA | FLUSH CEILING MTG PLT | LCN | 4040XP-18G | 695 | |
| 2 EA | SURFACE CLOSER | LCN | 4040XP | 695 | TOP JAMB MOUNTED. NOT TO EXTEND BELOW TOP STILE OF STOREFRONT DOOR |
| 4 EA | CYLINDER | INSTA-KEY | INSTA-KEY | 313 | CONTACT SHAKE SHACK FOR FURTHER DETAIL |
| 1 EA | REMAINING GASKETING | | | | BY ALUMINUM DOOR SUPPLIER |
| 2 EA | DOOR SWEEP | ZER | 8192AA | AA | |

**SET # 02 - EXTERIOR SINGLE WITH SURFACE VERTICAL ROD PANIC HARDWARE**

| | | | | | |
|---|---|---|---|---|---|
| 1 EA | THRESHOLD | ZERO | 655A | A | |
| 1 EA | CONT. HINGE | IVES | 700 | 630 | CONTINUOUS HINGE |
| 1 EA | OH STOP & HOLDER | GLY | 100H ADJ | 630 | OVERHEAD HOLDER AT OPENING |
| 1 EA | PANIC HARDWARE | VON | CD3347A-L-06 | 313 | |
| 1 EA | FLUSH CEILING MTG PLT | LCN | 4040XP-18G | 695 | |
| 1 EA | SURFACE CLOSER | LCN | 4040XP | 695 | TOP JAMB MOUNTED. NOT TO EXTEND BELOW TOP STILE OF STOREFRONT DOOR |
| 2 EA | CYLINDER | INSTA-KEY | INSTA-KEY | 313 | CONTACT SHAKE SHACK FOR FURTHER DETAIL |
| 1 EA | REMAINING GASKETING | | | | BY ALUMINUM DOOR SUPPLIER |
| 1 EA | DOOR SWEEP | ZER | 8192AA | AA | |

**SET # 03 - VESTIBULE**

| | | | | | |
|---|---|---|---|---|---|
| 1 EA | CONT. HINGE | IVES | 700 | 630 | CONTINUOUS HINGE |
| 1 EA | OH STOP & HOLDER | GLY | 100H ADJ | 630 | OVERHEAD HOLDER AT OPENING |
| 1 EA | SURFACE CLOSER | LCN | 4040XP | 695 | TOP JAMB MOUNTED. NOT TO EXTEND BELOW TOP STILE OF STOREFRONT DOOR |

**SET #04 - RESTROOM, MULTI-OCCUPANT**

| | | | | | |
|---|---|---|---|---|---|
| 3 EA | HW HINGE | IVE | 3CB1/HW 4.5 X 4.5 | 630 | |
| 1 EA | DOOR PULL, 1" ROUND | IVE | 8103H-D 8" | 630 | |
| 1 EA | SURFACE CLOSER | LCN | 4040XP | 630 | |
| 2 EA | PUSH PLATE | IVE | 8400 18" X 2" LESS DOOR WIDTH | 630 | |
| 2 EA | KICK PLATE | IVE | 8400 6" X 2" LESS DOOR WIDTH | 630 | |
| 1 EA | WALL STOP | IVE | WS406/407CCV | 630 | |
| 1 EA | SEALS | ZER | 488S | S-BK | |

NOTE: KICKPLATE 6" HEIGHT. PUSH PLATE 18" HEIGHT, MOUNTED AS SHOWN ON DOOR ELEVATIONS. CLOSER TO BE PULL SIDE MOUNTED

**SET #05 - MANAGER'S OFFICE**

| | | | | | |
|---|---|---|---|---|---|
| 3 EA | HW HINGE | IVE | 3CB1/HW 4.5 X 4.5 | 630 | |
| 1 EA | STOREROOM LOCK | SCH | L9080L 06L | 630 | |
| 1 EA | CYLINDER AS REQ. | INSTA-KEY | INSTA-KEY | US26D | CONTACT SHAKE SHACK FOR FURTHER DETAIL |
| 1 EA | SURFACE CLOSER | LCN | 4040XP H | 689 | |
| 1 EA | KICK PLATE | IVE | 8400 12" X 2" LESS DOOR WIDTH | 630 | INSTALL ON PUSH SIDE |
| 1 EA | WALL STOP | IVE | WS406/407CCV | 630 | |
| 1 EA | SEALS | ZER | 488S | S-BK | |

NOTE: CLOSER PUSH SIDE MOUNTED

**SET #06 - BACK OF HOUSE DOOR**

| | | | | | |
|---|---|---|---|---|---|
| 1 EA | CONT. HINGE | IVE | 700 | 630 | |
| 1 EA | PANIC HARDWARE | VON | CD-99-L-NL-06-1439 | 626 | |
| 2 EA | CYLINDER AS REQ. | INSTA-KEY | INSTA-KEY | US26D | CONTACT SHAKE SHACK FOR FURTHER DETAIL |
| 1 EA | SURFACE CLOSER | LCN | 4040XP SHOUSH | 689 | |
| 1 EA | VIEWPORT | DOO | DS/2000 AL,S | | |
| 1 EA | ARMOR PLATE | IVE | 8300 36" X 2" LESS DOOR WIDTH | 630 | |
| 1 EA | SEALS | ZER | 429 | A | |
| 1 EA | DOOR SWEEP | ZER | 8192AA | AA | |
| 1 EA | THRESHOLD | ZER | 655A | A | |

NOTE: CLOSER PUSH SIDE MOUNTED. DOOR VIEWER BY DOOR-SCOPE MOUNTING PER DOOR ELEVATIONS

## DOOR TYPES

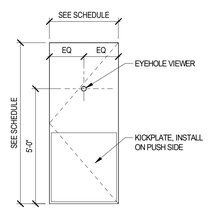


**TYPE F: HOLLOW METAL - SINGLE (WORK ROOM / BOH DOOR)**

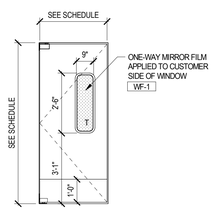


**TYPE E: DOUBLE ACTING, ELIASON - SINGLE**

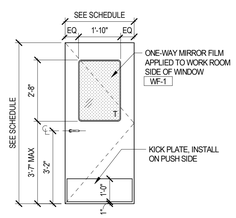


**TYPE D: HOLLOW METAL DOOR W/ VISION PANEL - SINGLE (MANAGER'S OFFICE)**

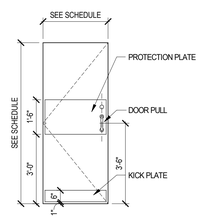


**TYPE C: HOLLOW METAL DOOR - SINGLE (MULTI-OCCUPANT RESTROOMS)**

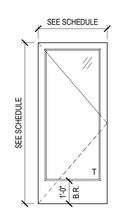


**TYPE B: ALUMINUM ENTRANCE - SINGLE**

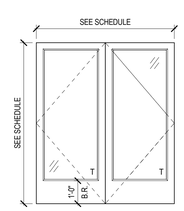


**TYPE A: ALUMINUM ENTRANCE - DOUBLE**

## DOOR SCHEDULE

| NO. | ROOM NAME | DOOR SIZE WIDTH | DOOR SIZE HEIGHT | DOOR TYPE | DOOR MAT. | DOOR FINISH | FRAME DETAILS HEAD | FRAME DETAILS JAMB | FRAME TYPE | FRAME MAT. | FRAME FIN. | HDWR | NOTES |
|---|---|---|---|---|---|---|---|---|---|---|---|---|---|
| 102A | CORRIDOR | 3' - 0" | 7' - 0" | - | - | - | 4/A602 | 4/A602 | 3 | - | P-4 | - | |
| 102B | PATIO | 3' - 0" | 8' - 0" | B | AL/GL | - | - | - | - | AL | AL | 2 | DOOR TO BE THERMALLY BROKEN. PROVIDE WEATHERSTRIPPING |
| 104 | WORK ROOM | 3' - 0" | 7' - 0" | E | SS | SS | 3/A602 | 2/A602 | 2 | SS | SS | - | DOOR, FRAME, HARDWARE BY ELIASON |
| 105 | WOMEN'S RESTROOM | 3' - 0" | 7' - 0" | C | HM | P-4 | 1/A602 | 1/A602 | 1 | HM | P-4 | 4 | GC TO UNDERCUT DOOR 3/4" |
| 106 | MEN'S RESTROOM | 3' - 0" | 7' - 0" | C | HM | P-4 | 1/A602 | 1/A602 | 1 | HM | P-4 | 4 | GC TO UNDERCUT DOOR 3/4" |
| 107 | EXTERIOR / WORK ROOM | 3' - 0" | 7' - 0" | F | HM | P-1 | 1/A602 | 1/A602 | 1 | HM | P-1 | 6 | |
| 108 | MANAGER'S OFFICE | 3' - 0" | 7' - 0" | D | HM | P-1 | 1/A602 | 1/A602 | 1 | HM | P-1 | 5 | GC TO UNDERCUT DOOR 3/4"; GC TO PROVIDE 1-WAY MIRROR FILM WF-1 ON WORK ROOM SIDE OF DOOR |
| 111A | ENTRY / VESTIBULE | 6' - 0" | 8' - 0" | A | AL/GL | - | - | - | - | AL | AL | 3 | DOOR TO BE THERMALLY BROKEN. PROVIDE WEATHERSTRIPPING |
| 111B | VESTIBULE | 6' - 0" | 8' - 0" | A | AL/GL | - | - | - | - | AL | AL | 1 | |
| 113 | EXTERIOR / UTILITY ROOM | 3' - 0" | 7' - 0" | F | HM | P-1 | 1/A602 | 1/A602 | 1 | HM | P-1 | 6 | |

## KEY PROGRAM NOTES

A. GC TO PROVIDE AND INSTALL NEW INSTAKEY KEY CONTROL KEYS & CYLINDERS TO SHAKE SHACK AT TURNOVER FROM NATIONAL ACCOUNT VENDOR FOR INSTAKEY KEY CONTROL & LOCKS ( 16 ). REFER TO T002 FOR VENDOR CONTACT INFORMATION.
B. ALL KEYED DOORS IN THE RESTAURANT TO BE PART OF THE SAME INSTAKEY KEY CONTROL SYSTEM - WHETHER ROVIDED BY LANDLORD, GC, OR VENDOR. GC TO CONFIRM WITH ARCHITECT AND OWNER PRIOR TO ORDERING AND INSTALLING.
C. MASTER KEY
- OPENS ALL DOORS IN RESTAURANT:
  - EXTERIOR DOORS (LANDLORD OR SHAKE SHACK PROVIDED)
  - MANAGER'S OFFICE
  - RESTROOMS
  - OTHER INTERIOR DOORS (MECHANICAL ROOM, DRY STORAGE, ETC.
- G.C. TO PROVIDE (6) MASTER KEYS DELIVERED TO SHAKE SHACK OPERATIONS TEAM ON-PREMISES
  - (6) MASTER KEYS AND (5) NEW RE-KEY INSTAKEY SET OPERATIONS TEAM ON PREMISES
D. VENDOR KEY
- OPENS ALL DOORS IN RESTAURANT EXCEPT MANAGER'S OFFICE
- GC TO PROVIDE (4) VENDOR KEYS AND (2) NEW RE-KEY INSTAKEY SET DELEVERED TO SHAKE SHACK OPERATIONS TEAM ON-PREMISES

## GENERAL NOTES

A. G.C. TO INSTALL TEMPERED GLASS IN ALL DOORS AS REQUIRED.
B. TEMPERED GLASS REQUIRED IF GLAZING IS LESS THAN 18" AFF. OR ADJACENT TO DOORS

Bergmeyer
BOS - 51 Sleeper St. 6th Floor Boston, MA 02210 617.542.1025
LA - 800 South Figueroa St. Suite 1060 Los Angeles, CA 90017 212.337.1090
www.bergmeyer.com

CONSULTANTS:

SEAL/ SIGNATURE:

| NO. | BY | DATE | DESCRIPTION |
|---|---|---|---|
| | | 2021-01-11 | PERMIT/BID SET |
| | | 2020-12-21 | 75% SET |

SHAKE SHACK

SHAKE SHACK - LEE'S SUMMIT MO

2051 NW LOWENSTEIN DRIVE
LEE'S SUMMIT, MISSOURI 64081
SHACK #1348

PERMIT/BID SET

DOOR, HARDWARE & SCHEDULES

DRAWN BY: CS & WQL
CHECKED BY: JS
JOB NO: 20068.00

A602

C:\Users\djevine\Documents\068_Shake Shack-Lee's Summit_Central_djevine@bergmeyer.com.rvt
1/11/2021 6:08:48 PM

RELEASE FOR CONSTRUCTION
AS NOTED ON PLANS REVIEW
DEVELOPMENT SERVICES
LEE'S SUMMIT, MISSOURI
03/10/2021

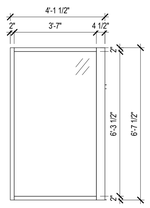


I STOREFRONT
AL. FRAME W/ 1" INSULATED GLAZING

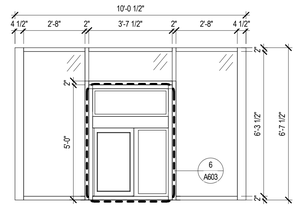


H STOREFRONT
AL. FRAME W/ 1" INSULATED GLAZING

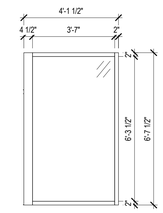


G STOREFRONT
AL. FRAME W/ 1" INSULATED GLAZING

## WINDOW TYPES

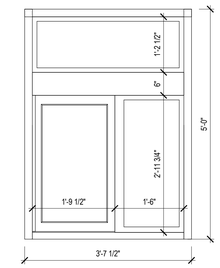


VENDOR: QUICK SERVE
CONTACT: BRIAN MCCLOSKEY

J FULLY AUTOMATIC DRIVE-UP WINDOW
AL. FRAME W/ SOLARBAN 70XL INSULATED LOW-E
QUICKSERV SERIES SS400SE W/ TRANSOM WINDOW, R/L
DIRECTION FROM OUTSIDE VIEW, DARK BRONZE ANODIZED
FINISH

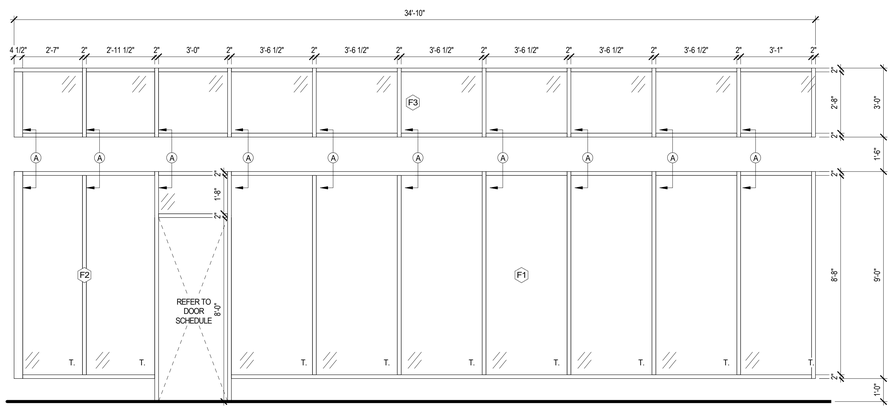


F STOREFRONT
AL. FRAME W/ 1" INSULATED GLAZING

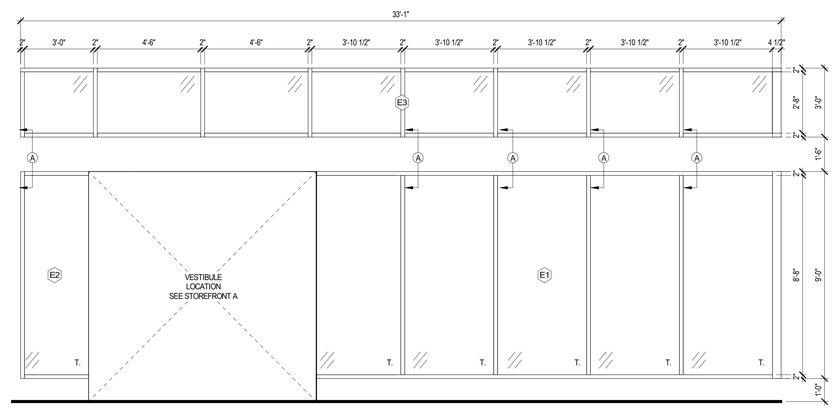


E STOREFRONT
AL. FRAME W/ 1" INSULATED GLAZING

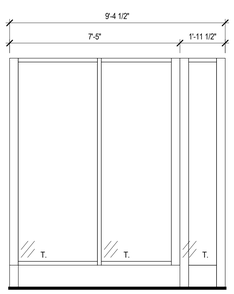


D STOREFRONT
AL. FRAME W/ 1" INSULATED GLAZING

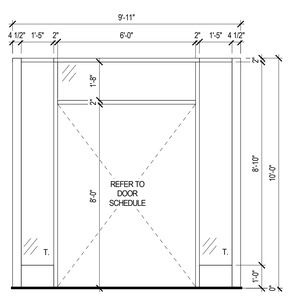


C STOREFRONT
AL. FRAME W/ 1" INSULATED GLAZING

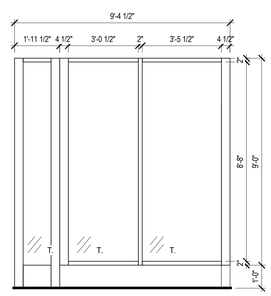


B STOREFRONT
AL. FRAME W/ 1" INSULATED GLAZING

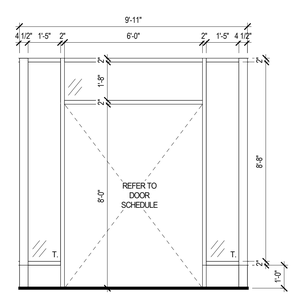


A STOREFRONT
AL. FRAME W/ 1" INSULATED GLAZING

## STOREFRONT GENERAL NOTES

1. GLASS TYPES DESIGNATIONS:
   A. "T" = TEMPERED INSULATED GLASS UNIT
2. VERIFY ALL ROUGH OPENINGS IN FIELD PRIOR TO FABRICATION
3. ALL STOREFRONTS & WINDOWS TO BE DESIGNED IN ACCORDANCE W/ ALL LOCAL CODES
4. STOREFRONT BASIS OF DESIGN:
   A. KAWNEER 451T SYSTEM, 2" SIGHTLINE W/ 4 1/2" DEPTH, CENTER PLANE GLAZING
      a. DARK BRONZE FINISH
5. STOREFRONT DOOR BASIS OF DESIGN:
   A. KAWNEER 350 MEDIUM STILE DOOR W/ 12" BOTTOM RAIL
      a. DARK BRONZE FINISH
6. STOREFRONT GLAZING BASIS OF DESIGN:
   A. SOLARBAN 70XL #2
      a. SHGC: 0.247
      b. VT: 0.562
      c. U-VALUE: 0.400

Bergmeyer
BOS
51 Sleeper St.
6th Floor
Boston, MA 02210
617.542.1025
LA
800 South Figueroa St.
Suite 1060
Los Angeles, CA 90017
212.337.1090
www.bergmeyer.com

CONSULTANTS:

SEAL/ SIGNATURE:

| NO. | BY | DATE | DESCRIPTION |
|---|---|---|---|
| | | 2021-01-11 | PERMIT/BID SET |
| | | 2020-12-21 | 75% SET |

SHAKE SHACK

SHAKE SHACK - LEE'S SUMMIT MO

2051 NW LOWENSTEIN DRIVE
LEE'S SUMMIT, MISSOURI 64081
SHACK #1348

PERMIT/BID SET

STOREFRONT SCHEDULES & ELEVATIONS

| | |
|---|---|
| DRAWN BY: | CS & WQL |
| CHECKED BY: | JS |
| JOB NO: | 20068.00 |

A603

C:\Users\djevine\Documents\068_Shake Shack-Lee's Summit_Central_djevine@bergmeyer.com.rvt
1/11/2021 6:08:52 PM

RELEASE FOR CONSTRUCTION
AS NOTED ON PLANS REVIEW
DEVELOPMENT SERVICES
LEE'S SUMMIT, MISSOURI
03/10/2021

## TABLE OF CONTENTS


**DIVISION 01 - GENERAL REQUIREMENTS**
SECTION 01 10 00 SUMMARY
SECTION 01 20 00 PRICE AND PAYMENT PROCEDURES
SECTION 01 30 00 ADMINISTRATIVE REQUIREMENTS
SECTION 01 40 00 QUALITY REQUIREMENTS
SECTION 01 50 00 TEMPORARY FACILITIES AND CONTROLS
SECTION 01 60 00 PRODUCT REQUIREMENTS
SECTION 01 62 00 SUBSTITUTION REQUEST FORM
SECTION 01 70 00 EXECUTION AND CLOSEOUT REQUIREMENTS
SECTION 01 74 00 CONSTRUCTION WASTE MANAGEMENT AND DISPOSAL
SECTION 01 81 20 CONSTRUCTION INDOOR AIR QUALITY MANAGEMENT
SECTION 01 90 00 LIFE CYCLE ACTIVITIES
SECTION 01 91 00 COMMISSIONING REQUIREMENTS
**DIVISION 02 - EXISTING CONDITIONS**
NOT USED
**DIVISION 03 - CONCRETE**
SECTION 03 30 00 CAST-IN-PLACE CONCRETE (BY STRUCTURAL ENGINEER)
SECTION 03 35 15 CONCRETE FINISHING
SECTION 03 41 00 PRECAST STRUCTURAL CONCRETE (BY STRUCTURAL ENGINEER)
**DIVISION 04 - MASONRY**
SECTION 04 21 00 THIN BRICK
**DIVISION 05 - METALS**
SECTION 05 10 00 STRUCTURAL STEEL (BY STRUCTURAL ENGINEER)
SECTION 05 40 00 COLD-FORMED METAL FRAMING
SECTION 05 50 00 METAL FABRICATIONS
**DIVISION 06 - WOOD, PLASTICS, AND COMPOSITES**
SECTION 06 10 00 ROUGH CARPENTRY
SECTION 06 16 00 SHEATHING
SECTION 06 40 23 INTERIOR ARCHITECTURAL WOODWORK
SECTION 06 64 00 PLASTIC PANELING
**DIVISION 07 - THERMAL AND MOISTURE PROTECTION**
SECTION 07 13 00 SELF-ADHERING SHEET WATERPROOFING
SECTION 07 21 00 THERMAL INSULATION
SECTION 07 25 00 WEATHER BARRIERS
SECTION 07 42 00 METAL WALL PANELS
SECTION 07 54 19 POLYVINYL-CHLORIDE ROOFING
SECTION 07 62 00 SHEET METAL FLASHING AND TRIM
SECTION 07 71 00 ROOF SPECIALTIES
SECTION 07 72 00 ROOF ACCESSORIES
SECTION 07 92 00 JOINT SEALANTS
**DIVISION 08 - OPENINGS**
SECTION 08 11 13 HOLLOW METAL DOORS AND FRAMES
SECTION 08 11 19 STAINLESS STEEL DOOR FRAMES
SECTION 08 31 00 ACCESS DOORS AND PANELS
SECTION 08 41 13 ALUMINUM ENTRANCES AND STOREFRONTS
SECTION 08 80 00 GLAZING
**DIVISION 09 - FINISHES**
SECTION 09 21 16 GYPSUM BOARD ASSEMBLIES
SECTION 09 30 00 TILING
SECTION 09 51 00 ACOUSTICAL CEILINGS
SECTION 09 67 00 FLUID-APPLIED FLOORING
SECTION 09 80 00 ACOUSTICAL TREATMENT
SECTION 09 91 00 PAINTING
**DIVISION 10 - SPECIALTIES**
SECTION 10 11 00 VISUAL DISPLAY BOARDS
SECTION 10 14 00 SIGNAGE
SECTION 10 21 10 TOILET COMPARTMENTS
SECTION 10 26 10 CORNER GUARDS
SECTION 10 28 13 TOILET ACCESSORIES
SECTION 10 44 00 FIRE PROTECTION SPECIALTIES
**DIVISION 11 - EQUIPMENT**
SECTION 11 40 00 FOOD SERVICE EQUIPMENT (BY KITCHEN CONSULTANT)
**DIVISION 12 - FURNISHINGS**
NOT USED
**DIVISION 13 - SPECIAL CONSTRUCTION**
NOT USED
**DIVISION 14 - CONVEYING EQUIPMENT**
NOT USED
**DIVISION 21 - FIRE SUPPRESSION**
SECTION 20 00 00 FIRE SUPPRESSION (BY ENGINEERING CONSULTANT)
**DIVISION 22 - PLUMBING**
SECTION 22 00 00 PLUMBING (BY ENGINEERING CONSULTANT)
**DIVISION 23 - HEATING, VENTILATING, AND AIR-CONDITIONING**
SECTION 23 00 00 HEATING, VENTILATING, AND AIR-CONDITIONING (BY ENGINEERING CONSULTANT)
**DIVISION 25 - INTEGRATED AUTOMATION**
NOT USED
**DIVISION 26 - ELECTRICAL**
SECTION 26 00 00 ELECTRICAL (BY ENGINEERING CONSULTANT)
**DIVISION 27 - COMMUNICATIONS**
NOT USED
**DIVISION 28 - ELECTRONIC SAFETY AND SECURITY**
NOT USED
**DIVISION 31 - EARTHWORK**
NOT USED
**DIVISION 32 - EXTERIOR IMPROVEMENTS**
NOT USED
**DIVISION 33 - UTILITIES**
NOT USED

END TABLE OF CONTENTS


**SECTION 01 10 00**

**SUMMARY**

PART 1 GENERAL

1.1 SUMMARY

A. PROJECT IDENTIFICATION: SHAKE SHACK, LEE'S SUMMIT; 2051 NW LOWENSTEIN DRIVE, LEE'S SUMMIT, MISSOURI 64081
B. PROJECT SUMMARY: NEW CONSTRUCTION, FREESTANDING QUICK SERVICE RESTAURANT WITH AN OUTDOOR PATIO. THE INTENDED USE GROUP IS A-2 ASSEMBLY. NEW STRUCTURAL, MECHANICAL, ELECTRICAL, PLUMBING, AND FIRE PROTECTION COMPONENTS ARE PROPOSED.
C. PARTICULAR PROJECT REQUIREMENTS:
   1. REQUIREMENTS FOR SEQUENCING, SCHEDULING AND COMPLETION DATE:
      a. TO BE DETERMINED.
   2. WORK BY OWNER AND OWNER'S SEPARATE VENDORS:
      a. REFER TO RESPONSIBILITY SCHEDULE ON DRAWINGS.
   3. OWNER-FURNISHED AND CONTRACTOR-INSTALLED (OFCI) ITEMS:
      a. POINT OF SALE (POS) SYSTEM.
      b. REFER TO RESPONSIBILITY SCHEDULE ON DRAWINGS.
   4. SUSTAINABLE DESIGN INTENT:
      a. DEMOLITION AND CONSTRUCTION WASTE MANAGEMENT: REFER TO SECTION 01 74 00 - CONSTRUCTION WASTE MANAGEMENT.
      b. ENERGY EFFICIENT WINDOW AND DOOR SYSTEMS.
      c. AIR SEALED AND INSULATED EXTERIOR ENVELOPE.
      d. WOOD PRODUCTS: WHERE AVAILABLE AND WHERE PRICE DIFFERENCE IS NOT SIGNIFICANT, OWNER WOULD PREFER TO PURCHASE RECYCLED CONTENT WOOD FIBER PRODUCTS AND FSC CERTIFIED LUMBER.
      e. INDOOR AIR QUALITY.
         - LOW-EMITTING MATERIALS, ADHESIVES, SEALANTS AND PRIMERS.
         - LOW-EMITTING MATERIALS, FLOORING MATERIALS.
         - LOW-EMITTING MATERIALS, FIELD-APPLIED PAINTS AND COATINGS.
         - LOW-EMITTING MATERIALS, NO ADDED UREA-FORMALDEHYDE.
      f. GREEN HOUSEKEEPING: USE LOW-EMITTING CLEANING MATERIALS AND METHODS AT FINAL CLEANING.
      g. REFER TO INDIVIDUAL SPECIFICATION SECTIONS FOR ADDITIONAL REQUIREMENTS.
   5. LANDLORD REQUIREMENTS:
      a. REFER TO RESPONSIBILITY SCHEDULE ON DRAWINGS.
D. PERMITS AND FEES: APPLY FOR, OBTAIN, AND PAY FOR PERMITS, FEES, AND UTILITY COMPANY BACKCHARGES REQUIRED TO PERFORM THE WORK. SUBMIT COPIES TO ARCHITECT.
   1. OWNER SHALL PAY FOR BUILDING AND HEALTH PERMITS.
E. CODES: COMPLY WITH APPLICABLE CODES AND REGULATIONS OF AUTHORITIES HAVING JURISDICTION. SUBMIT COPIES OF INSPECTION REPORTS, NOTICES AND SIMILAR COMMUNICATIONS TO ARCHITECT.
F. DIMENSIONS: VERIFY DIMENSIONS INDICATED ON DRAWINGS WITH FIELD DIMENSIONS BEFORE FABRICATION OR ORDERING OF MATERIALS. DO NOT SCALE DRAWINGS.
G. EXISTING CONDITIONS: NOTIFY ARCHITECT OF EXISTING CONDITIONS DIFFERING FROM THOSE INDICATED ON THE DRAWINGS. DO NOT REMOVE OR ALTER STRUCTURAL COMPONENTS WITHOUT PRIOR WRITTEN APPROVAL.
H. COORDINATION:
   1. COORDINATE THE WORK OF ALL TRADES.
   2. PREPARE COORDINATION DRAWINGS FOR AREAS ABOVE CEILINGS WHERE CLOSE TOLERANCES ARE REQUIRED BETWEEN BUILDING ELEMENTS AND MECHANICAL AND ELECTRICAL WORK.
   3. VERIFY LOCATION OF UTILITIES AND EXISTING CONDITIONS.
I. INSTALLATION REQUIREMENTS, GENERAL:
   1. INSPECT SUBSTRATES AND REPORT UNSATISFACTORY CONDITIONS IN WRITING.
   2. DO NOT PROCEED UNTIL UNSATISFACTORY CONDITIONS HAVE BEEN CORRECTED.
   3. TAKE FIELD MEASUREMENTS PRIOR TO FABRICATION WHERE PRACTICAL. FORM TO REQUIRED SHAPES AND SIZES WITH TRUE EDGES, LINES AND ANGLES. PROVIDE INSERTS AND TEMPLATES AS NEEDED FOR WORK OF OTHER TRADES.
   4. INSTALL MATERIALS IN EXACT ACCORDANCE WITH MANUFACTURER'S INSTRUCTIONS AND APPROVED SUBMITTALS.
   5. INSTALL MATERIALS IN PROPER RELATION WITH ADJACENT CONSTRUCTION AND WITH PROPER APPEARANCE.
   6. RESTORE UNITS DAMAGED DURING INSTALLATION. REPLACE UNITS WHICH CANNOT BE RESTORED AT NO ADDITIONAL EXPENSE TO THE OWNER.
   7. REFER TO ADDITIONAL INSTALLATION REQUIREMENTS AND TOLERANCES SPECIFIED UNDER INDIVIDUAL SPECIFICATION SECTIONS.
J. LIMIT OF USE: LIMIT USE OF WORK AS INDICATED. KEEP DRIVEWAYS AND ENTRANCES CLEAR.
K. EXISTING CONSTRUCTION: MAINTAIN EXISTING BUILDING IN A WEATHERTIGHT CONDITION. REPAIR DAMAGE CAUSED BY CONSTRUCTION OPERATIONS. PROTECT BUILDING AND ITS OCCUPANTS.
L. DEFINITIONS:
   1. PROVIDE: FURNISH AND INSTALL, COMPLETE WITH ALL NECESSARY ACCESSORIES, READY FOR INTENDED USE. PAY FOR ALL RELATED COSTS.
      a. FURNISH: SUPPLY AND DELIVER TO PROJECT SITE, READY FOR UNLOADING, UNPACKING, ASSEMBLY, INSTALLATION, AND SIMILAR OPERATIONS.
      b. INSTALL: OPERATIONS AT PROJECT SITE INCLUDING UNLOADING, TEMPORARILY STORING, UNPACKING, ASSEMBLING, ERECTING, PLACING, ANCHORING, APPLYING, WORKING TO DIMENSION, FINISHING, CURING, PROTECTING, CLEANING, AND SIMILAR OPERATIONS.
   2. APPROVED: ACCEPTANCE OF ITEM SUBMITTED FOR APPROVAL. NOT A LIMITATION OR RELEASE FOR COMPLIANCE WITH THE CONTRACT DOCUMENTS OR REGULATORY REQUIREMENTS. REFER TO LIMITATIONS OF 'APPROVED' IN GENERAL AND SUPPLEMENTARY CONDITIONS.
   3. MATCH EXISTING: MATCH EXISTING AS ACCEPTABLE TO THE OWNER.
M. INTENT: DRAWINGS AND SPECIFICATIONS ARE INTENDED TO PROVIDE THE BASIS FOR PROPER COMPLETION OF THE WORK SUITABLE FOR THE INTENDED USE OF THE OWNER. ANYTHING NOT EXPRESSLY SET FORTH BUT WHICH IS REASONABLE IMPLIED OR NECESSARY FOR PROPER PERFORMANCE OF THE PROJECT SHALL BE INCLUDED.
N. WRITING STYLE: SPECIFICATIONS ARE WRITTEN IN THE IMPERATIVE MODE. EXCEPT WHERE SPECIFICALLY INTENDED OTHERWISE, THE SUBJECT OF ALL IMPERATIVE STATEMENTS IS THE CONTRACTOR. FOR EXAMPLE, 'PROVIDE TILE' MEANS 'CONTRACTOR SHALL PROVIDE TILE.'

PART 2 PRODUCTS - NOT APPLICABLE TO THIS SECTION

PART 3 EXECUTION - NOT APPLICABLE TO THIS SECTION

**END OF SECTION**

**SECTION 01 20 00**

**PRICE AND PAYMENT PROCEDURES**

PART 1 GENERAL

1.1 SUMMARY

A. PRICE AND PAYMENT PROCEDURES:
   a. ALTERNATES.

1.2 ALTERNATES

A. TOTAL PRICE: PROVIDE TOTAL PRICE FOR EACH ALTERNATE IN BID FORM. INCLUDE COST OF MODIFICATIONS TO OTHER WORK TO ACCOMMODATE ALTERNATE. INCLUDE RELATED COSTS SUCH AS OVERHEAD AND PROFIT.
B. ACCEPTANCE OF ALTERNATES: OWNER WILL DETERMINE WHICH ALTERNATES ARE SELECTED FOR INCLUSION IN THE CONTRACT.
C. COORDINATION OF ALTERNATES: MODIFY OR ADJUST AFFECTED ADJACENT WORK AS NECESSARY TO INTEGRATE WORK OF THE ALTERNATE INTO PROJECT. COORDINATE ALTERNATES WITH RELATED WORK TO ENSURE THAT WORK AFFECTED BY EACH SELECTED ALTERNATE IS PROPERLY ACCOMPLISHED.
D. LIST OF ALTERNATES: TO BE DETERMINED.

PART 2 PRODUCTS - NOT APPLICABLE TO THIS SECTION

PART 3 EXECUTION - NOT APPLICABLE TO THIS SECTION

**END OF SECTION**

**SECTION 01 30 00**

**ADMINISTRATIVE REQUIREMENTS**

PART 1 GENERAL

1.1 SUMMARY

A. ADMINISTRATION OF CONTRACT: PROVIDE ADMINISTRATIVE REQUIREMENTS FOR THE PROPER COORDINATION AND COMPLETION OF WORK INCLUDING THE FOLLOWING:
   1. SUPERVISORY PERSONNEL.
   2. PRECONSTRUCTION CONFERENCE.
   3. PROJECT MEETINGS, MINIMUM OF TWO PER MONTH; PREPARE AND DISTRIBUTE MINUTES.
B. REPORTS: SUBMIT WEEKLY AND SPECIAL REPORTS.
C. WORK SCHEDULE: SUBMIT PROGRESS SCHEDULE, UPDATED MONTHLY.
D. SUBMITTAL SCHEDULE: PREPARE SUBMITTAL SCHEDULE; COORDINATE WITH PROGRESS SCHEDULE.
E. SCHEDULE OF VALUES: SUBMIT SCHEDULE OF VALUES.
F. SCHEDULE OF TESTS: SUBMIT SCHEDULE OF REQUIRED TESTS INCLUDING PAYMENT AND RESPONSIBILITY.
G. PERFORM SURVEYS: LAY OUT THE WORK AND VERIFYING LOCATIONS DURING CONSTRUCTION. PERFORM FINAL SITE SURVEY.
H. EMERGENCY CONTACTS: SUBMIT AND POST A LIST OF EMERGENCY TELEPHONE NUMBERS AND ADDRESS FOR INDIVIDUALS TO BE CONTACTED IN CASE OF EMERGENCY.
I. RECORD DOCUMENTS: SUBMIT RECORD DRAWINGS AND SPECIFICATIONS; TO BE MAINTAINED AND ANNOTATED BY CONTRACTOR AS WORK PROGRESSES.

1.2 SUBMITTALS

A. TYPES OF SUBMITTALS: PROVIDE TYPES OF SUBMITTALS LISTED IN INDIVIDUAL SECTIONS; AND PROVIDE EITHER ELECTRONIC FILE (PDF) OR NUMBER OF COPIES REQUIRED BELOW.
   1. SHOP DRAWINGS, REVIEWED AND ANNOTATED BY THE CONTRACTOR - 4 COPIES.
   2. PRODUCT DATA - 4 COPIES.
   3. SAMPLES - 2, PLUS EXTRA SAMPLES AS REQUIRED TO INDICATE RANGE OF COLOR, FINISH, AND TEXTURE TO BE EXPECTED.
   4. INSPECTION AND TEST REPORTS - 4 COPIES.
   5. WARRANTIES - 4 COPIES.
   6. SURVEY DATA - 4 COPIES.
   7. CLOSEOUT SUBMITTALS - 4 COPIES.
   8. PROJECT PHOTOGRAPHS - 6 DIGITAL IMAGES EACH WEEK SUBMITTED BY EMAIL. LABEL EACH IMAGE WITH DATE.
B. SUBMITTAL PROCEDURES: COMPLY WITH PROJECT FORMAT FOR SUBMITTALS. COMPLY WITH SUBMITTAL PROCEDURES ESTABLISHED BY ARCHITECT INCLUDING ARCHITECT'S SUBMITTAL AND SHOP DRAWING STAMP. PROVIDE REQUIRED RESUBMITTALS IF ORIGINAL SUBMITTALS ARE NOT APPROVED. PROVIDE DISTRIBUTION OF APPROVED COPIES INCLUDING MODIFICATIONS AFTER SUBMITTALS HAVE BEEN APPROVED.
C. SAMPLES AND SHOP DRAWINGS: SAMPLES AND SHOP DRAWINGS SHALL BE PREPARED SPECIFICALLY FOR THIS PROJECT. SHOP DRAWINGS SHALL INCLUDE DIMENSIONS AND DETAILS, INCLUDING ADJACENT CONSTRUCTION AND RELATED WORK. NOTE SPECIAL COORDINATION REQUIRED. NOTE ANY DEVIATIONS FROM REQUIREMENTS OF THE CONTRACT DOCUMENTS.
D. WARRANTIES: PROVIDE WARRANTIES AS SPECIFIED; WARRANTIES SHALL NOT LIMIT LENGTH OF TIME FOR REMEDY OF DAMAGES OWNER MAY HAVE BY LEGAL STATUTE. CONTRACTOR, SUPPLIER OR INSTALLER RESPONSIBLE FOR PERFORMANCE OF WARRANTY SHALL SIGN WARRANTIES.

1.3 SCHEDULE OF SUBMITTALS

A. PROJECT INFORMATION:
   1. SUBMITTAL LOG (SCHEDULE OF SUBMITTALS)
      a. PROVIDE A COMPLETE LIST OF ALL REQUIRED SUBMITTALS FOR THE PROJECT
      b. OWNER/ARCHITECT TO USE AS A TOOL TO MONITOR PROGRESS AND COMPLETENESS OF THE REQUIRED SUBMITTALS
   2. SUBMITTAL LOG SHALL SERVE AS THE BASIS OF THE SUBMITTAL SCHEDULE. SUBMITTAL LOG SHALL BE SUBMITTED PRIOR TO OR WITH THE INITIAL APPLICATION FOR PAYMENT. AN UPDATED SUBMITTAL LOG SHALL BE SUBMITTED WITH EACH SUBSEQUENT PAYMENT APPLICATION.
   3. SCHEDULE OF SUBMITTALS: PROVIDE SUFFICIENTLY IN ADVANCE OF TRANSMITTAL ORF FIRST SUBMITTAL AND PRIOR TO FIRST APPLICATION FOR PAYMENT.

1.8 START-UP REPORTS

A. SUBMIT ELECTRONIC COPY THAT CLEARLY DEPICTS POINT OF CONTACT OF SIGN OFF. EACH SUBMITTAL MUST BE ATTACHED AS A SEPARATE FILE AND NAMED ACCORDINGLY.

PART 2 PRODUCTS - NOT APPLICABLE TO THIS SECTION

PART 3 EXECUTION - NOT APPLICABLE TO THIS SECTION

**END OF SECTION**

**SECTION 01 40 00**

**QUALITY REQUIREMENTS**

PART 1 GENERAL

1.1 SUMMARY

A. QUALITY MONITORING: MONITOR QUALITY CONTROL OVER SUPPLIERS, MANUFACTURERS, PRODUCTS, SERVICES, SITE CONDITIONS, AND WORKMANSHIP, TO PRODUCE WORK OF SPECIFIED QUALITY. PERFORM QUALITY CONTROL PROCEDURES AND INSPECTIONS DURING INSTALLATION.
B. STANDARDS: COMPLY WITH SPECIFIED STANDARDS AS MINIMUM QUALITY FOR THE WORK EXCEPT WHERE MORE STRINGENT TOLERANCES, CODES, OR SPECIFIED REQUIREMENTS INDICATE HIGHER STANDARDS OR MORE PRECISE WORKMANSHIP.
C. TOLERANCES: MONITOR FABRICATION AND INSTALLATION TOLERANCE CONTROL OF PRODUCTS TO PRODUCE ACCEPTABLE WORK. DO NOT PERMIT TOLERANCES TO ACCUMULATE. COMPLY WITH MANUFACTURERS' TOLERANCES.
D. REFERENCE STANDARDS: FOR PRODUCTS OR WORKMANSHIP SPECIFIED BY ASSOCIATION, TRADE, OR OTHER CONSENSUS STANDARDS, COMPLY WITH REQUIREMENTS OF THE STANDARD, EXCEPT WHEN MORE RIGID REQUIREMENTS ARE SPECIFIED OR ARE REQUIRED BY APPLICABLE CODES.
E. MANUFACTURER'S FIELD SERVICES: WHEN SPECIFIED IN INDIVIDUAL SPECIFICATION SECTIONS, REQUIRE MATERIAL OR PRODUCT SUPPLIERS OR MANUFACTURERS TO PROVIDE QUALIFIED STAFF PERSONNEL TO PERFORM THE FOLLOWING AS APPLICABLE, AND TO INITIATE INSTRUCTIONS WHEN NECESSARY.
   1. OBSERVE SITE CONDITIONS.
   2. CONDITIONS OF SURFACES AND INSTALLATION.
   3. QUALITY OF WORKMANSHIP.
   4. START-UP OF EQUIPMENT.
   5. TEST, ADJUST AND BALANCE OF EQUIPMENT.
F. MOCK-UPS: ASSEMBLE AND ERECT SPECIFIED ITEMS WITH SPECIFIED ATTACHMENT AND ANCHORAGE DEVICES, FLASHINGS, SEALS, AND FINISHES. ACCEPTED MOCK-UPS SHALL BE A COMPARISON STANDARD FOR THE REMAINING WORK.
   1. REFER TO DRAWINGS FOR TYPES, CONFIGURATIONS, AND LOCATIONS OF MOCK-UPS.
   2. ACCEPTED IN-PLACE MOCK-UPS MAY REMAIN AS PART OF THE FINISHED WORK.
G. REMOVAL OF MOCK-UPS: WHERE MOCK-UP HAS BEEN ACCEPTED BY ARCHITECT AND NO LONGER NEEDED, REMOVE MOCK-UP AND CLEAR AREA WHEN DIRECTED TO DO SO.
   1. REMOVE REJECTED MOCK-UPS FROM PROJECT AREA.
H. QUALITY CONTROL AND TESTING SERVICES: PROVIDE INSPECTIONS, TESTS, AND OTHER QUALITY-CONTROL SERVICES SPECIFIED ELSEWHERE IN THE CONTRACT DOCUMENTS AND REQUIRED BY AUTHORITIES HAVING JURISDICTION.
   1. RETESTING: RETEST WHERE RESULTS OF INSPECTIONS, TESTS, OR OTHER QUALITY-CONTROL SERVICES PROVE UNSATISFACTORY AND INDICATE NONCOMPLIANCE WITH CONTRACT DOCUMENT REQUIREMENTS.
   2. ASSOCIATED SERVICES: COOPERATE WITH AGENCIES PERFORMING REQUIRED INSPECTIONS, TESTS, AND SIMILAR SERVICES, AND PROVIDE REASONABLE AUXILIARY SERVICES AS REQUESTED. NOTIFY THE AGENCY SUFFICIENTLY IN ADVANCE OF OPERATIONS TO PERMIT ASSIGNMENT OF PERSONNEL.

PART 2 PRODUCTS - NOT APPLICABLE TO THIS SECTION

PART 3 EXECUTION - NOT APPLICABLE TO THIS SECTION

END OF SECTION

**SECTION 01 50 00**

**TEMPORARY FACILITIES AND CONTROLS**

PART 1 GENERAL

1.1 SUMMARY

A. TEMPORARY SERVICES: PROVIDE TEMPORARY SERVICES AND UTILITIES, INCLUDING PAYMENT OF UTILITY COSTS INCLUDING THE FOLLOWING.
   1. WATER (POTABLE AND NON-POTABLE).
   2. LIGHTING AND POWER.
   3. METERING.
   4. TELEPHONE AND WI-FI CONNECTION.
   5. TOILET FACILITIES.
   6. MATERIALS STORAGE.
B. CONSTRUCTION FACILITIES: PROVIDE CONSTRUCTION FACILITIES, INCLUDING PAYMENT OF UTILITY COSTS INCLUDING THE FOLLOWING.
   1. CONSTRUCTION EQUIPMENT.
   2. DEWATERING AND PUMPING.
   3. ENCLOSURES.
   4. HEATING.
   5. LIGHTING.
   6. ACCESS.
C. SECURITY AND PROTECTION: PROVIDE SECURITY AND PROTECTION REQUIREMENTS INCLUDING THE FOLLOWING.
   1. FIRE EXTINGUISHERS.
   2. SITE ENCLOSURE FENCE, BARRICADES, WARNING SIGNS, AND LIGHTS.
   3. BUILDING ENCLOSURE AND LOCK-UP.
   4. ENVIRONMENTAL PROTECTION.
   5. PEST CONTROL DURING AND AT THE END OF CONSTRUCTION.
   6. SNOW AND ICE REMOVAL IF APPLICABLE.
D. PERSONNEL SUPPORT: PROVIDE PERSONNEL SUPPORT FACILITIES INCLUDING THE FOLLOWING.
   1. CONTRACTOR'S FIELD OFFICE.
   2. SANITARY FACILITIES.
   3. DRINKING WATER.
   4. PROJECT IDENTIFICATION SIGN.
   5. CLEANING.

PART 2 PRODUCTS

2.1 TEMPORARY BRACING

A. TEMPORARY BRACING OF MASONRY PARTITIONS: AS REQUIRED TO STABILIZE CONSTRUCTION DURING INSTALLATION OF MASONRY WORK.

PART 3 EXECUTION - NOT APPLICABLE TO THIS SECTION

**END OF SECTION**

**SECTION 01 60 00**

**PRODUCT REQUIREMENTS**

PART 1 GENERAL

1.1 SUMMARY

A. MANUFACTURERS: PROVIDE PRODUCTS FROM ONE MANUFACTURER FOR EACH TYPE OR KIND AS APPLICABLE. PROVIDE SECONDARY MATERIALS AS ACCEPTABLE TO MANUFACTURERS OF PRIMARY MATERIALS.
B. PRODUCT SELECTION: PROVIDE PRODUCTS SELECTED OR EQUAL APPROVED BY ARCHITECT. PRODUCTS SUBMITTED FOR SUBSTITUTION SHALL BE SUBMITTED WITH COMPLETE DOCUMENTATION, AND INCLUDE CONSTRUCTION COSTS OF SUBSTITUTION INCLUDING RELATED WORK.
C. SUBSTITUTIONS: REQUEST FOR SUBSTITUTION MUST BE IN WRITING. CONDITIONS FOR SUBSTITUTION INCLUDE:
   1. AN "OR EQUAL" PHRASE IN THE SPECIFICATIONS.
   2. SPECIFIED MATERIAL CANNOT BE COORDINATED WITH OTHER WORK.
   3. SPECIFIED MATERIAL IS NOT ACCEPTABLE TO AUTHORITIES HAVING JURISDICTION.
   4. SUBSTANTIAL ADVANTAGE IS OFFERED TO THE OWNER IN TERMS OF COST, TIME, OR OTHER VALUABLE CONSIDERATION.
D. SUBSTITUTION REQUESTS: SUBSTITUTIONS SHALL BE SUBMITTED PRIOR TO AWARD OF CONTRACT, UNLESS OTHERWISE ACCEPTABLE. APPROVAL OF SHOP DRAWINGS, PRODUCT DATA, OR SAMPLES CONTAINING SUBSTITUTIONS IS NOT AN APPROVAL OF A SUBSTITUTION UNLESS AN ITEM IS CLEARLY PRESENTED AS A SUBSTITUTION AT THE TIME OF SUBMITTAL.
   1. SUBSTITUTION REQUEST SHALL NOT AFFECT SUSTAINABLE DESIGN GOALS.

PART 2 PRODUCTS - NOT APPLICABLE TO THIS SECTION

PART 3 EXECUTION - NOT APPLICABLE TO THIS SECTION

**END OF SECTION**

**SECTION 01 62 00**

**SUBSTITUTION REQUEST FORM**

NO SUBSTITUTIONS WILL BE CONSIDERED WITHOUT THIS COMPLETED SUBSTITUTION REQUEST FORM AND SUPPORTING DOCUMENTATION. SUBSTITUTIONS MADE WITHOUT COMPLETION OF THIS FORM WILL BE CONSIDERED DEFECTIVE WORK AS STATED IN THE CONTRACT.

DATE: ____________________ NUMBER: ______________________

RE: REQUEST FOR SUBSTITUTION

THE CONTRACTOR PROPOSES THE FOLLOWING SUBSTITUTION IN ACCORDANCE WITH THE REQUIREMENTS OF THE CONTRACT DOCUMENTS:

SCOPE OF SUBSTITUTION ____________________

SPECIFICATION REFERENCE ____________________

DRAWING REFERENCE ____________________

REASON FOR PROPOSED SUBSTITUTION ____________________

BENEFIT TO OWNER ____________________

IMPACT ON SUSTAINABLE DESIGN INTENT ____________________

IMPACT ON PROJECT COST ____________________

IMPACT ON PROJECT SCHEDULE ____________________

IMPACT ON GUARANTEES AND WARRANTIES ____________________

COORDINATION AND COMPATIBILITY REQUIRED WITH ADJACENT MATERIALS AND SYSTEM ____________________

LIST DEVIATIONS FROM SPECIFIED REQUIREMENTS ____________________

ATTACHMENTS: ATTACH SUPPORTING DOCUMENTATION SUFFICIENT FOR ARCHITECT TO EVALUATE SUBSTITUTION. SUBSTITUTION REQUEST FORMS SUBMITTED WITHOUT ADEQUATE DOCUMENTATION WILL BE RETURNED WITHOUT REVIEW.

ATTACHMENTS ____________________

RESPONSE DATE: LIST DATE BY WHICH RESPONSE BY ARCHITECT IS REQUESTED TO MAINTAIN PROJECT SCHEDULE AND ALLOW SUFFICIENT TIME FOR INCLUSION OF PROPOSED SUBSTITUTION.

RESPONSE DATE ____________________

SUBMITTED BY ____________________

FIRM AND ADDRESS ____________________

SIGNATURE BELOW SIGNIFIES ACCEPTANCE OF RESPONSIBILITY FOR ACCURACY AND COMPLETENESS OF INFORMATION INCLUDED IN THIS SUBSTITUTION REQUEST FORM.

AUTHORIZED SIGNATURE ____________________
ARCHITECT'S RESPONSE

NOTATIONS LISTED BELOW SHALL HAVE SAME MEANING AS ON ARCHITECT'S APPROVAL STAMP. CLARIFICATIONS TO OR CHANGES IN PROJECT SCHEDULE OR TIME SHALL BE PROCESSED USING STANDARD PROJECT FORMS.

ARCHITECT'S RESPONSE
________ NO EXCEPTIONS TAKEN
________ MAKE CORRECTIONS NOTED
________ REVISE AND RESUBMIT
________ REJECTED
________ RETURNED WITHOUT REVIEW

REMARKS ____________________

DATE ____________________

SIGNED ____________________

**END OF FORM**

**SECTION 01 70 00**

**EXECUTION AND CLOSEOUT REQUIREMENTS**

PART 1 GENERAL

1.1 SUMMARY

A. SUBSTANTIAL COMPLETION: THE FOLLOWING ARE PREREQUISITES TO SUBSTANTIAL COMPLETION. PROVIDE THE FOLLOWING:
   1 PUNCH LIST PREPARED BY CONTRACTOR AND SUBCONTRACTORS AS APPLICABLE.
   2. SUPPORTING DOCUMENTATION.
   3. WARRANTIES.
   4. CERTIFICATIONS.
   5. OCCUPANCY PERMIT.
   6. START-UP AND TESTING OF BUILDING SYSTEMS.
   7. CHANGE OVER OF LOCKS.
   8. METER READINGS.
   9. COMMISSIONING DOCUMENTATION.
B. FINAL ACCEPTANCE: PROVIDE THE FOLLOWING PREREQUISITES TO FINAL ACCEPTANCE:
   1. FINAL PAYMENT REQUEST WITH SUPPORTING AFFIDAVITS.
   2. COMPLETED PUNCH LIST.
C. AS-BUILT DRAWINGS: PROVIDE A MARKED-UP SET OF DRAWINGS INCLUDING CHANGES, WHICH OCCURRED DURING CONSTRUCTION.
D. PROJECT CLOSEOUT: PROVIDE THE FOLLOWING DURING PROJECT CLOSEOUT:
   1. SUBMISSION OF RECORD DOCUMENTS.
   2. SUBMISSION OF MAINTENANCE MANUALS.
   3. TRAINING AND TURNOVER TO OWNER'S PERSONNEL.
   4. FINAL CLEANING AND TOUCH-UP.
   5. REMOVAL OF TEMPORARY FACILITIES.

PART 2 PRODUCTS - NOT APPLICABLE TO THIS SECTION

PART 3 EXECUTION

3.1 CUTTING AND PATCHING

A. CUTTING AND PATCHING: PROVIDE CUTTING AND PATCHING WORK TO PROPERLY COMPLETE THE WORK OF THE PROJECT, COMPLYING WITH PROJECT REQUIREMENTS FOR:
   1. STRUCTURAL WORK.
   2. MECHANICAL/ELECTRICAL SYSTEMS.
   3. VISUAL REQUIREMENTS, INCLUDING DETAILING AND TOLERANCES.
   4. OPERATIONAL AND SAFETY LIMITATIONS.
   5. FIRE RESISTANCE RATINGS.
   6. INSPECTION, PREPARATION, AND PERFORMANCE.
   7. CLEANING.
B. MEANS AND METHODS: DO NOT CUT AND PATCH IN A MANNER THAT WOULD RESULT IN A FAILURE OF THE WORK TO PERFORM AS INTENDED, DECREASE ENERGY PERFORMANCE, INCREASE MAINTENANCE, DECREASE OPERATIONAL LIFE, OR DECREASE SAFETY PERFORMANCE.
C. INSPECTION: INSPECT CONDITIONS PRIOR TO WORK TO IDENTIFY SCOPE AND TYPE OF WORK REQUIRED. PROTECT ADJACENT WORK. NOTIFY OWNER OF WORK REQUIRING INTERRUPTION TO BUILDING SERVICES OR OWNER'S OPERATIONS.
D. PERFORMANCE OF OPERATIONS: PERFORM WORK WITH WORKMEN SKILLED IN THE TRADES INVOLVED. PREPARE SAMPLE AREA OF EACH TYPE OF WORK FOR APPROVAL.
E. CUTTING: USE CUTTING TOOLS, NOT CHOPPING TOOLS. MAKE NEAT HOLES. MINIMIZE DAMAGE TO ADJACENT WORK. INSPECT FOR CONCEALED UTILITIES AND STRUCTURE BEFORE CUTTING.
F. PATCHING: MAKE PATCHES, SEAMS, AND JOINTS DURABLE AND INCONSPICUOUS. COMPLY WITH TOLERANCES FOR NEW WORK.
G. CLEANING: CLEAN WORK AREA AND AREAS AFFECTED BY CUTTING AND PATCHING OPERATIONS.
   1. USE ONLY NONTOXIC, GREEN CLEANING MATERIALS AND METHODS.
   2. OMPLY WITH SECTION 01 74 00 - CONSTRUCTION WASTE MANAGEMENT.

**END OF SECTION**

**SECTION 01 74 00**

**CONSTRUCTION WASTE MANAGEMENT AND DISPOSAL**

PART 1 - GENERAL

1.1 SUMMARY

A. THIS SECTION INCLUDES REQUIREMENTS FOR THE CONTRACTOR'S IMPLEMENTATION OF WASTE MANAGEMENT CONTROLS AND SYSTEMS FOR THE DURATION OF THE WORK.

1.2 INTENT

A. THE OWNER AND ARCHITECT HAVE ESTABLISHED THAT THIS PROJECT SHALL GENERATE THE LEAST AMOUNT OF WASTE PRACTICAL AND THAT PROCESSES THAT ENSURE THE GENERATION OF AS LITTLE WASTE AS POSSIBLE DUE TO ERROR, POOR PLANNING, BREAKAGE, MISHANDLING, CONTAMINATION, OR OTHER FACTORS SHALL BE EMPLOYED.
B. WITH REGARD TO THESE GOALS THE CONTRACTOR SHALL DEVELOP, FOR THE ARCHITECT'S REVIEW, A DEMOLITION AND CONSTRUCTION WASTE MANAGEMENT PLAN (WMP) FOR THIS PROJECT.
   1. EACH SUBCONTRACTOR SHALL BE RESPONSIBLE FOR SEGREGATING HIS OWN WASTE INTO DIFFERENT DUMPSTERS AS DIRECTED BY THE CONTRACTOR.
C. CONTRACTOR SHALL BE RESPONSIBLE FOR ENSURING THAT DEBRIS WILL BE DISPOSED OF AT APPROPRIATELY DESIGNATED LICENSED SOLID WASTE DISPOSAL FACILITIES, AS DEFINED BY LOCAL AUTHORITIES HAVING JURISDICTION.

1.3 SUBMITTALS

A. WASTE MANAGEMENT PLAN (WMP): SUBMIT WITHIN 10 CALENDAR DAYS AFTER RECEIPT OF NOTICE TO PROCEED, IN A FORMAT ACCEPTABLE TO THE OWNER.
   1. ANALYSIS OF THE PROPOSED JOBSITE WASTE TO BE GENERATED, INCLUDING TYPES AND ROUGH QUANTITIES.
   2. LANDFILL OPTIONS: THE NAME OF THE LANDFILLS WHERE TRASH AND BUILDING DEBRIS WILL BE DISPOSED OF, THE APPLICABLE LANDFILL TIPPING FEES, AND THE PROJECTED COST OF DISPOSING OF ALL PROJECT WASTE IN THE LANDFILLS.
   3. LANDFILL CERTIFICATION: CONTRACTOR'S STATEMENT OF VERIFICATION THAT LANDFILLS PROPOSED FOR USE ARE LICENSED FOR TYPES OF WASTE TO BE DEPOSITED AND HAVE SUFFICIENT CAPACITY TO RECEIVE WASTE FROM THIS PROJECT.
   4. ALTERNATIVES TO LANDFILLING: A LIST OF EACH MATERIAL PROPOSED TO BE SALVAGED OR RECYCLED DURING THE COURSE OF THE PROJECT. INCLUDE THE FOLLOWING AND ANY ADDITIONAL ITEMS PROPOSED:
      a. CARDBOARD AND PAPER PRODUCTS.
      b. CLEAN DIMENSIONAL WOOD.
      c. BEVERAGE CONTAINERS.
      d. CONCRETE.
      e. BRICKS AND MASONRY.
      f. ASPHALT.
      g. METALS FROM FRAMING, BANDING, STUD TRIM, DUCTWORK, PIPING, REBAR, ROOFING, OTHER TRIM, STEEL, IRON, GALVANIZED SHEET STEEL, STAINLESS STEEL, ALUMINUM, COPPER, ZINC, LEAD, BRASS, AND BRONZE.
      h. MECHANICAL AND ELECTRICAL EQUIPMENT.
      i. BUILDING COMPONENTS WHICH CAN BE REMOVED RELATIVELY INTACT FROM EXISTING CONSTRUCTION.
      j. PACKAGING MATERIALS, INCLUDING CARDBOARD, BOXES, PLASTIC SHEET AND FILM, POLYSTYRENE PACKAGING, WOOD CRATES, PLASTIC PAILS.
      k. GLASS.
      l. SCRAPS FROM NEW GYPSUM WALL BOARD.
      m. CARPET AND PAD.
      n. ACOUSTICAL CEILING PANELS.
      o. PLASTICS.
      p. LAND CLEARING DEBRIS AND VEGETATION.
   5. MEETINGS: A DESCRIPTION OF THE REGULAR MEETINGS TO BE HELD TO ADDRESS WASTE MANAGEMENT.
   6. MATERIALS HANDLING PROCEDURES: A DESCRIPTION OF THE MEANS BY WHICH ANY WASTE MATERIALS IDENTIFIED ABOVE WILL BE PROTECTED FROM CONTAMINATION, AND A DESCRIPTION OF THE MEANS TO BE EMPLOYED IN RECYCLING THE ABOVE MATERIALS CONSISTENT WITH REQUIREMENTS FOR ACCEPTANCE BY DESIGNATED FACILITIES.
   7. TRANSPORTATION: A DESCRIPTION OF THE MEANS OF TRANSPORTATION OF THE RECYCLABLE MATERIALS (WHETHER MATERIALS WILL BE SITE-SEPARATED AND SELF-HAULED TO DESIGNATED CENTERS, OR WHETHER MIXED MATERIALS WILL BE COLLECTED BY A WASTE HAULER AND REMOVED FROM THE SITE) AND DESTINATION OF MATERIALS.
B. WASTE MANAGEMENT PROGRESS REPORTS: CONCURRENT WITH EACH APPLICATION FOR PAYMENT, SUBMIT A WRITTEN WASTE MANAGEMENT PROGRESS REPORT IN THE SAME FORMAT AS REQUIRED FOR FINAL REPORT.
C. OTHER SUBMITTALS:
   1. RECORDS OF DONATIONS: INDICATE RECEIPT AND ACCEPTANCE OF SALVAGEABLE WASTE DONATED TO INDIVIDUALS AND ORGANIZATIONS. INDICATE WHETHER ORGANIZATION IS TAX EXEMPT.
   2. RECORDS OF SALES: INDICATE RECEIPT AND ACCEPTANCE OF SALVAGEABLE WASTE SOLD TO INDIVIDUALS AND ORGANIZATIONS. INDICATE WHETHER ORGANIZATION IS TAX EXEMPT.
   3. RECYCLING AND PROCESSING FACILITY RECORDS: INDICATE RECEIPT AND ACCEPTANCE OF RECYCLABLE WASTE BY RECYCLING AND PROCESSING FACILITIES LICENSED TO ACCEPT THEM. INCLUDE MANIFESTS, WEIGHT TICKETS, AND/OR RECEIPTS.
   4. LANDFILL AND INCINERATOR DISPOSAL RECORDS: INDICATE RECEIPT AND ACCEPTANCE OF WASTE BY LANDFILLS AND INCINERATOR FACILITIES LICENSED TO ACCEPT THEM. INCLUDE MANIFESTS, WEIGHT TICKETS, AND/OR RECEIPTS.


Bergmeyer
BOS - 51 Sleeper St. 6th Floor Boston, MA 02210 617.542.1025
LA - 800 South Figueroa St. Suite 1080 Los Angeles, CA 90017 212.337.1090
www.bergmeyer.com


CONSULTANTS:

SEAL/ SIGNATURE:

| NO. | BY | DATE | DESCRIPTION |
|---|---|---|---|
| | | 2021-01-11 | PERMIT/BID SET |
| | | 2020-12-21 | 75% SET |

SHAKE SHACK

SHAKE SHACK - LEE'S SUMMIT MO

2051 NW LOWENSTEIN DRIVE
LEE'S SUMMIT, MISSOURI 64081
SHACK #1348

PERMIT/BID SET

ARCHITECTURAL SPECIFICATIONS

DRAWN BY: CS & WQL
CHECKED BY: JS
JOB NO: 20068.00

A701

RELEASE FOR CONSTRUCTION
AS NOTED ON PLANS REVIEW
DEVELOPMENT SERVICES
LEE'S SUMMIT, MISSOURI
03/10/2021

PART 2 - PRODUCTS [NOT USED]

PART 3 - EXECUTION

3.1 PLAN IMPLEMENTATION

A. GENERAL: IMPLEMENT WASTE MANAGEMENT PLAN AS APPROVED BY THE ARCHITECT. PROVIDE CONTAINERS, STORAGE, SIGNAGE, TRANSPORTATION, AND OTHER ITEMS AS REQUIRED TO IMPLEMENT WMP FOR THE ENTIRE DURATION OF THE CONTRACT.
B. COMMINGLING WASTE: COMMINGLING WASTE AT THE JOB SITE MAY BE ALLOWED, PROVIDED THAT THE FOLLOWING CONDITIONS ARE MET:
1. COMMINGLERS SHALL BE INCLUDED IN THE WASTE MANAGEMENT PLAN (WMP).
2. ADDITIONAL COMMINGLERS MUST BE PRE-APPROVED BY THE ARCHITECT VIA WMP ADDENDA, PRIOR TO TIPPING ON THE JOB SITE.

3.2 WASTE MANAGEMENT PLAN IMPLEMENTATION

A. MANAGER: THE CONTRACTOR SHALL DESIGNATE AN ON-SITE PERSON RESPONSIBLE FOR INSTRUCTING WORKERS AND OVERSEEING AND DOCUMENTING RESULTS OF THE WASTE MANAGEMENT PLAN FOR THE PROJECT.
B. DISTRIBUTION: THE CONTRACTOR SHALL DISTRIBUTE COPIES OF THE WASTE MANAGEMENT PLAN TO THE JOB SITE FOREMAN, EACH SUBCONTRACTOR, THE OWNER AND THE ARCHITECT.
C. INSTRUCTION: THE CONTRACTOR SHALL PROVIDE ON-SITE INSTRUCTION OF APPROPRIATE SEPARATION, HANDLING, AND RECYCLING, SALVAGE, REUSE, AND RETURN METHODS TO BE USED BY ALL PARTIES AT THE APPROPRIATE STAGES OF THE PROJECT.
D. SEPARATION FACILITIES: THE CONTRACTOR SHALL LAY OUT AND LABEL A SPECIFIC AREA TO FACILITATE SEPARATION OF MATERIALS FOR RECYCLING, SALVAGE, REUSE, AND RETURN. RECYCLING AND WASTE BIN AREAS ARE TO BE KEPT NEAT AND CLEAN AND CLEARLY MARKED IN ORDER TO AVOID CONTAMINATION OF MATERIALS. LOCATION SHALL BE ACCEPTABLE TO THE ARCHITECT.
1. WASTE COMMINGLING SHALL BE APPROVED PRIOR TO JOBSITE TIPPING, PER REQUIREMENTS OF THIS SECTION.
E. HAZARDOUS WASTES: ANY UNFORESEEN HAZARDOUS WASTES SHALL BE SEPARATED, STORED, AND DISPOSED OF ACCORDING TO LOCAL REGULATIONS AND AS DIRECTED BY THE OWNER.

**END OF SECTION**

**SECTION 01 81 20**

**CONSTRUCTION INDOOR AIR QUALITY MANAGEMENT**

PART 1 GENERAL

1.1 SUMMARY

A. THIS SECTION INCLUDES REQUIREMENTS FOR MINIMUM INDOOR AIR QUALITY (IAQ) PERFORMANCE STANDARDS DURING THE CONSTRUCTION PERIOD AND BEFORE OCCUPANCY.
B. WITH REGARD TO THESE GOALS THE CONTRACTOR SHALL DEVELOP, FOR OWNER AND ARCHITECT REVIEW, A CONSTRUCTION INDOOR AIR QUALITY MANAGEMENT PLAN FOR THIS PROJECT.

1.2 PERFORMANCE REQUIREMENTS

A. PREVENT EXPOSURE OF BUILDING SYSTEMS TO ENVIRONMENTAL TOBACCO SMOKE DURING CONSTRUCTION. AT A MINIMUM, TAKE THE FOLLOWING MEASURES:
1. DO NOT ALLOW SMOKING IN ENCLOSED PORTIONS OF THE PROJECT SITE.
2. LOCATE EXTERIOR DESIGNATED SMOKING AREAS AT LEAST 25 FEET AWAY FROM ENTRIES, OUTDOOR AIR INTAKES AND OPERABLE WINDOWS. PROVIDE SIGNAGE FOR DESIGNATED SMOKING AREAS AT EACH ENTRY.
B. DURING CONSTRUCTION MEET OR EXCEED THE MINIMUM REQUIREMENTS OF THE RECOMMENDED CONTROL MEASURES OF THE SHEET METAL AND AIR CONDITIONING NATIONAL CONTRACTORS ASSOCIATION (SMACNA) IAQ GUIDELINES FOR OCCUPIED BUILDINGS UNDER CONSTRUCTION, SECOND EDITION, NOVEMBER 2007, CHAPTER 3.
C. PROTECT ABSORPTIVE MATERIALS FROM MOISTURE DAMAGE WHEN STORED ON-SITE AND AFTER INSTALLATION.
D. DURING CONSTRUCTION, COMPLY WITH THE FOLLOWING REQUIREMENTS:
1. IF PERMANENTLY INSTALLED AIR HANDLERS ARE USED DURING CONSTRUCTION, FILTRATION MEDIA WITH A MINIMUM EFFICIENCY REPORTING VALUE (MERV) OF 13 SHALL BE USED AT EACH RETURN AIR GRILLE, AS DETERMINED BY ASHRAE 52.2-1999. REPLACE FILTRATION MEDIA IMMEDIATELY PRIOR TO OCCUPANCY.
E. AFTER CONSTRUCTION ENDS BUT BEFORE OCCUPANCY, COMPLY WITH ONE OF THE FOLLOWING REQUIREMENTS:
1. PERFORM A BUILDING FLUSH-OUT WITH OUTSIDE AIR.
2. CONDUCT IAQ TESTING FOR AIR CONTAMINANT LEVELS IN THE BUILDING.

1.3 SUBMITTALS

A. CONSTRUCTION INDOOR AIR QUALITY (IAQ) MANAGEMENT PLAN: WITH THE COMPLETED FORM OF BIDDER'S PROPOSAL, THE CONTRACTOR SHALL SUBMIT A PRELIMINARY CONSTRUCTION IAQ MANAGEMENT PLAN.
1. WITHIN 10 CALENDAR DAYS AFTER RECEIPT OF NOTICE TO PROCEED, THE CONTRACTOR SHALL SUBMIT TO THE OWNER A FINALIZED CONSTRUCTION IAQ MANAGEMENT PLAN.
2. THE PROPOSED PLAN SHALL COMPLY WITH DIVISION 23 – MECHANICAL REQUIREMENTS.
3. THE PROPOSED PLAN SHALL INCLUDE, BUT NOT BE LIMITED TO, THE FOLLOWING:
a. PROTECTION OF VENTILATION SYSTEM COMPONENTS DURING CONSTRUCTION.
b. CLEANING AND REPLACING CONTAMINATED VENTILATION SYSTEM COMPONENTS AFTER CONSTRUCTION, INCLUDING FILTRATION MEDIA.
c. TEMPORARY VENTILATION.
d. PROTECTION OF ABSORPTIVE MATERIALS FROM MOISTURE DAMAGE WHEN STORED ON-SITE AND AFTER INSTALLATION, INCLUDING EXTERIOR WALL RAIN PROTECTION.
e. SEQUENCE OF FINISH INSTALLATION PLAN.
f. SELECTION OF CLEANING PRODUCTS AND PROCEDURES TO BE USED DURING CONSTRUCTION AND FINAL CLEANING.
g. OTHER ITEMS AS REQUIRED BY SMACNA IAQ GUIDELINES FOR OCCUPIED BUILDINGS UNDER CONSTRUCTION, CHAPTER 3.
4. COORDINATE CONSTRUCTION IAQ MANAGEMENT PLAN WITH LANDLORD'S AND OWNER'S CURRENT IAQ MANAGEMENT PLANS AND PROCEDURES.
B. INDOOR AIR QUALITY (IAQ) DATA: SUBMIT EMISSION TEST DATA AS REQUIRED, WITH TESTING LABORATORY AND DATE CLEARLY IDENTIFIED.
C. MATERIAL SAFETY DATA SHEETS (MSDS): SUBMIT FOR MATERIALS AS REQUIRED, WITH DATE CLEARLY IDENTIFIED. MSDS MUST CONTAIN SPECIFIC CHEMICAL CONTENT DATA IDENTIFYING THE PERCENT OF THE TOTAL PRODUCT MASS REPRESENTED BY EACH LISTED CHEMICAL.
D. PRODUCT DATA: SUBMIT FOR EACH TYPE OF FILTRATION MEDIA USED DURING CONSTRUCTION AND INSTALLED IMMEDIATELY PRIOR TO OCCUPANCY, WITH MERV VALUES CLEARLY IDENTIFIED.

1.4 DELIVERY, STORAGE, AND HANDLING

A. TAKE SPECIAL CARE TO PREVENT ACCUMULATION OF MOISTURE ON MATERIALS AND WITHIN PACKAGING DURING DELIVERY, STORAGE, AND HANDLING TO PREVENT DEVELOPMENT OF MOLD AND MILDEW INSIDE PACKAGING AND ON PRODUCTS.
B. IMMEDIATELY REMOVE FROM SITE AND PROPERLY DISPOSE OF MATERIALS SHOWING SIGNS OF MOLD AND MILDEW, INCLUDING MATERIALS WITH MOISTURE STAINS.

PART 2 PRODUCTS

2.1 FILTRATION MEDIA

A. FILTRATION MEDIA: COMPLY WITH ASHRAE 52.2-1999 AND PROVIDE MERV AS REQUIRED.

PART 3 EXECUTION

3.1 CONSTRUCTION IAQ MANAGEMENT PLAN IMPLEMENTATION
A. IAQ MANAGER: THE CONTRACTOR SHALL DESIGNATE AN ON-SITE PERSON RESPONSIBLE FOR INSTRUCTING WORKERS AND OVERSEEING AND DOCUMENTING RESULTS OF THE CONSTRUCTION IAQ MANAGEMENT PLAN FOR THE PROJECT.
B. DISTRIBUTION: THE CONTRACTOR SHALL DISTRIBUTE COPIES OF THE CONSTRUCTION IAQ MANAGEMENT PLAN TO THE JOB SITE FOREMAN, EACH SUBCONTRACTOR, THE OWNER, AND THE ARCHITECT.
C. INSTRUCTION: THE CONTRACTOR SHALL PROVIDE ON-SITE INSTRUCTION OF APPROPRIATE PROCEDURES AND METHODS TO BE USED BY ALL PARTIES AT THE APPROPRIATE STAGES OF THE PROJECT.
D. PRECONDITIONING: ALLOW PRODUCTS, WHICH HAVE ODORS AND SIGNIFICANT VOC EMISSIONS, TO OFF-GAS IN A DRY, WELL-VENTILATED SPACE FOR SUFFICIENT PERIOD TO DISSIPATE ODORS AND EMISSIONS PRIOR TO DELIVERY TO PROJECT.
1. REMOVE CONTAINERS AND PACKAGING FROM MATERIALS PRIOR TO CONDITIONING TO MAXIMIZE OFF-GASSING OF VOCS.
2. CONDITION PRODUCTS IN VENTILATED WAREHOUSE OR OTHER BUILDING.

**END OF SECTION**

**SECTION 01 90 00**

**LIFE CYCLE ACTIVITIES**

PART 1 GENERAL

1.1 SUMMARY

A. COMMISSIONING: PROVIDE COMMISSIONING OF BUILDING SYSTEMS, SUBSYSTEMS AND EQUIPMENT INCLUDING:
1. HVAC COMPONENTS AND EQUIPMENT.
2. BUILDING AUTOMATION SYSTEMS, INLCLUDING SECURITY SYSTEMS.
3. LIGHTING CONTROL SYSTEMS.
B. COMMISSIONING AGENT: THE OWNER WILL ENGAGE A COMMISSIONING AGENT TO PREPARE A COMMISSIONING PLAN AND REPORT, AND TO PERFORM FUNCTIONAL TESTS AND INSPECTIONS OF BUILDING SYSTEMS.
C. COOPERATION: COOPERATE WITH THE OWNER'S COMMISSIONING AGENT, INCLUDNG ATTENDANCE AT COMMISSIONING MEETINGS AND ACTIVITIES, COORDINATING SCHEDULING, ACCESS TO THE WORK AND UTILITY SERVICES FOR COMMISSIONING ACTIVITIES.
D. ACCESS: PROVIDE ACCESS TO PROJECT DOCUMENTATION, SHOP DRAWINGS, WIRING DIAGRAMS, OPERATIONS AND MAINTENANCE MANUALS AND SIMILARS ITEMS WHEN REQUESTED BY THE OWNER'S COMMISSIONING AGENT.
E. REMEDIAL WORK: MODIFY, ADJUST, BALANCE, REPAIR OR REPLACE SYSTEMS, SUBSYSTEMS AND EQUIPMENT WHICH DO NOT PERFORM TO CODE REQUIREMENTS OR TO REQUIREMENTS SPECIFIED IN THE CONTRACT DOCUMENTS AT NO ADDITIONAL EXPENSE TO THE OWNER. PAY FOR RETESTING AND ADDITIONAL MODIFICATIONS UNTIL SATISFACTORY RESULTS ARE OBTAINED.

PART 2 PRODUCTS - NOT APPLICABLE TO THIS SECTION

PART 3 EXECUTION - NOT APPLICABLE TO THIS SECTION

**END OF SECTION**

**SECTION 01 91 00**

**COMMISSIONING REQUIREMENTS**

PART 1 GENERAL

1.1 SUMMARY

A. PROVIDE COMMISSIONING AS DESCRIBED IN THE FOLLOWING SECTION

1.2 DESCRIPTION OF WORK

A. WORK INCLUDED: PROVIDE LABOR, MATERIALS AND EQUIPMENT NECESSARY TO COMPLETE THE WORK OF THIS SECTION, INCLUDING BUT NOT LIMITED TO THE FOLLOWING:
1. GENERAL COMMISSIONING REQUIREMENTS FOR THIS PROJECT.
1.7 QUALITY CONTROL
A. GENERAL CONTRACTOR IS TO PROVIDE A PRIMARY PERSON, COMMISSIONING SPECIALIST, TO OVERSEE AND MANAGE THE COMMISSIONING ACTIVITIES PERFORMED BY THE INSTALLING CONTRACTORS.
B. COMMISSIONING SPECIALIST SHALL HAVE EXPERIENCE WITH THE TYPES OF INSPECTIONS AND TESTS TO BE PERFORMED.
C. COMMISSIONING SPECIALIST SHALL COORDINATE AND MANAGE JOB-SITE COMMISSIONING PROGRESS MEETINGS, AS NECESSARY, TO MONITOR CONSTRUCTION AND COMMISSIONING PROGRESS. COORDINATE WITH THE COMMISSIONING AUTHORITY TO ADDRESS COORDINATION, DEFICIENCY RESOLUTION, AND PLANNING ISSUES.
D. COMMISSIONING AUTHORITY SHALL PLAN AND COORDINATE ADDITIONAL MEETINGS AS REQUIRED TO EXPEDITE THE COMMISSIONING WORK.
E. COMMISSIONING SPECIALIST SHALL PERFORM SITE VISITS TO OBSERVE COMPONENT AND SYSTEM INSTALLATIONS.
F. COMMISSIONING SPECIALIST SHALL COORDINATE WITH THE COMMISSIONING AUTHORITY TO SCHEDULE THE FUNCTIONAL PERFORMANCE TEST AND ENSURE SYSTEM READINESS. EQUIPMENT SHALL NOT BE "TEMPORARILY" STARTED FOR COMMISSIONING. FUNCTIONAL PERFORMANCE TESTING SHALL NOT BEGIN UNTIL PRE-FUNCTIONAL, START-UP AND TAB IS COMPLETED FOR A GIVEN SYSTEM. THE CONTROLS SYSTEM AND EQUIPMENT IT CONTROLS SHALL NOT BE FUNCTIONALLY TESTED UNTIL ALL POINTS HAVE BEEN CALIBRATED AND PRE-FUNCTIONAL CHECKLISTS ARE COMPLETED.

PART 2 - PRODUCTS

2.1 TEST EQUIPMENT - INSTRUMENTATION:
A. INSTRUMENTATION SHALL MEET THE FOLLOWING STANDARDS:
1. BE OF SUFFICIENT QUALITY AND ACCURACY TO TEST AND MEASURE SYSTEM PERFORMANCE WITHIN THE TOLERANCES REQUIRED TO DETERMINE ADEQUATE PERFORMANCE.
2. BE CALIBRATED ON THE MANUFACTURER'S RECOMMENDED INTERVALS WITH CALIBRATION TAGS PERMANENTLY AFFIXED TO THE INSTRUMENT BEING USED.
3. BE MAINTAINED IN GOOD REPAIR AND OPERATION CONDITION THROUGHOUT THE DURATION OF USE ON THIS PROJECT.
B. STANDARD TESTING EQUIPMENT REQUIRED TO PERFORM STARTUP AND INITIAL CHECKOUT AND REQUIRED FUNCTIONAL PERFORMANCE TESTING SHALL BE PROVIDED BY THE SUBCONTRACTORS FOR THE EQUIPMENT BEING TESTED.
C. DATA LOGGING EQUIPMENT OR SOFTWARE REQUIRED TO TEST EQUIPMENT IF NECESSARY WILL BE PROVIDED BY THE SUBCONTRACTORS, BUT SHALL NOT BECOME THE PROPERTY OF THE OWNER.

PART 3 - EXECUTION

3.1 COMMISSIONING PROCESS OVERVIEW
A. THE FOLLOWING OUTLINES THE COMMISSIONING TASKS AND THE GENERAL ORDER IN WHICH THEY OCCUR IN THE COMMISSIONING PROCESS. THE COMMISSIONING AUTHORITY SHALL COORDINATE ACTIVITIES WITH THE COMMISSIONING TEAM AND THE COMMISSIONING SPECIALIST SHALL MANAGE THE ON-SITE ACTIVITIES.
1. COMMISSIONING PLAN SHALL BE DEVELOPED BY THE COMMISSIONING AUTHORITY AND IMPLEMENTED BY THE COMMISSIONING TEAM. THE GC AND ALL APPLICABLE SUB-CONTRACTORS ARE REQUIRED TO EXECUTE THE PROCEDURES AND ACTIVITIES LISTED IN THE COMMISSIONING PLAN.
2. CONTRACTOR SHOP DRAWING REVIEW WILL BE PERFORMED BY THE COMMISSIONING AUTHORITY CONCURRENTLY WITH THE ENGINEERING REVIEW. THE COMMISSIONING SPECIALIST WILL BE RESPONSIBLE FOR SUBMITTING TIMELY DOCUMENTATION AND A COPY OF THE FINAL APPROVED SUBMITTALS.
3. PRE-FUNCTIONAL CHECKLISTS WILL BE PREPARED BY THE COMMISSIONING AUTHORITY, COMPLETED BY THE INSTALLING CONTRACTOR, VERIFIED AND SUBMITTED TO THE COMMISSIONING AUTHORITY BY THE COMMISSIONING SPECIALIST.
4. COMMISSIONING AUTHORITY WILL PREPARE THE FUNCTIONAL PERFORMANCE TEST WHICH SHALL BE PERFORMED BY THE COMMISSIONING AUTHORITY WITH THE ASSISTANCE OF THE INSTALLING CONTRACTOR
5. SHORT-TERM DIAGNOSTIC TESTING WILL BE PERFORMED BY THE INSTALLING CONTRACTOR WHEN NECESSARY TO TROUBLE-SHOOT AND DIAGNOSE PERFORMANCE DEFICIENCIES.
6. OPERATIONS AND MAINTENANCE TRAINING PLAN AND DOCUMENTATION WILL BE REVIEWED BY THE OWNER AND COMMISSIONING AUTHORITY AND PERFORMED BY THE INSTALLING CONTRACTORS.
7. FINAL COMMISSIONING REPORT WILL BE PREPARED BY THE COMMISSIONING AUTHORITY AFTER THE COMMISSIONING SPECIALIST HAS SUBMITTED THE REQUIRED COMMISSIONING DOCUMENTATION AND OTHER SUPPORTING DOCUMENTATION.
8. DEFERRED AND/OR SEASONAL TESTING WILL BE PERFORMED BY THE INSTALLING CONTRACTOR AND VERIFIED BY THE COMMISSIONING AUTHORITY IF REQUESTED BY THE OWNER.

3.2 COORDINATION
A. THE COMMISSIONING AUTHORITY REPORTS DIRECTLY TO THE OWNER.
B. PREPARATION OF THE COMMISSIONING PLAN, PRE-FUNCTIONAL CHECKLISTS, AND FUNCTIONAL PERFORMANCE TEST PROCEDURE SHALL BE BY THE COMMISSIONING AUTHORITY.
C. COORDINATION AND VERIFICATION OF THE COMMISSIONING TASKS SHALL BE BY THE COMMISSIONING SPECIALIST.
D. DINSTALLING CONTRACTOR SHALL COMPLETE PRE-FUNCTIONAL CHECKLISTS, START-UP EQUIPMENT TESTS, AND SUPPORT FUNCTIONAL PERFORMANCE TESTS.

3.3 COMMISSIONED SYSTEMS

1. PROVIDE COMMISIONING FOR ALL FIRE PROTECTION, HVAC, MECHANICAL PIPING, AND ELECTRICAL SYSTEMS

3.4 SUBMITTALS & DELIVERABLES

A. INSTALLING CONTRACTOR;
1. PERFORM COMMISSIONING ACTIVITIES AS DESCRIBED IN THE COMMISSIONING PLAN AND AS DIRECTED BY THE COMMISSIONING SPECIALIST OR THE COMMISSIONING AUTHORITY.
2. SUBMIT EQUIPMENT AND COMPONENT SHOP DRAWINGS TO THE COMMISSIONING AUTHORITY CONCURRENTLY WITH ENGINEER SUBMISSION.
3. INSTALLATION, OPERATIONS, AND MAINTENANCE (IOM) MANUALS ARE TO BE SUBMITTED TO THE COMMISSIONING AUTHORITY TWO WEEKS AFTER RECEIVING APPROVED SHOP DRAWINGS OR TWO WEEKS AFTER ORDERING THE EQUIPMENT; WHICHEVER OCCURS FIRST.
4. RESPOND TO THE COMMISSIONING AUTHORITY AND CORRECT DEFICIENCIES IDENTIFIED IN THE ISSUES REPORT WITHIN ONE WEEK OF ISSUANCE.
5. COMPLETE THE PRE-FUNCTIONAL CHECKLISTS AND SUBMIT TO THE COMMISSIONING AUTHORITY WITHIN ONE WEEK OF COMPLETION.
6. SUBMIT APPROVED SEQUENCE OF OPERATION TO THE COMMISSIONING AUTHORITY TWO WEEKS AFTER RECEIVING APPROVED SHOP DRAWINGS.
7. SUBMIT OPERATIONS AND MAINTENANCE (O&M) AND OPERATIONS AND MAINTENANCE TRAINING PLAN TO THE COMMISSIONING AUTHORITY ONE WEEK PRIOR TO SUBSTANTIAL COMPLETION. THE OPERATIONS AND MAINTENANCE TRAINING PLAN SHALL ONLY BE REQUIRED IF REQUESTED BY THE OWNER.
8. SUBMIT ALL COMMISSIONING DOCUMENTATION AND REPORTS THE COMMISSIONING AUTHORITY WITHIN ONE WEEK OF COMPLETION.
9. SUPPORT DEMONSTRATION OF SYSTEM INTEGRATION AND PERFORMANCE BY THE COMMISSIONING AUTHORITY.
10. PROVIDE ALL REQUIRED PERSONNEL, LADDERS, INSTRUMENTATION, 2-WAY RADIOS, AND ANY OTHER ITEMS REQUIRED TO CONDUCT THE FUNCTIONAL PERFORMANCE TEST.
11. SUBMIT WARRANTY DOCUMENTATION TO THE OWNER AND COMMISSIONING AUTHORITY PRIOR TO CONTRACT CLOSEOUT.
12. SUBMIT O&M DOCUMENTATION ONE WEEK PRIOR TO SUBSTANTIAL COMPLETION.
B. COMMISSIONING SPECIALIST:
1. INCORPORATE COMMISSIONING ACTIVITIES INTO THE CONSTRUCTION SCHEDULE AND PROVIDE THE COMMISSIONING AUTHORITY WITH CONSTRUCTION SCHEDULES AND CONSTRUCTION MEETING MINUTES.
2. EQUIPMENT AND COMPONENT SHOP DRAWINGS ARE TO BE SUBMITTED TO THE COMMISSIONING AUTHORITY CONCURRENTLY WITH ENGINEER SUBMISSION.
3. INSTALLATION, OPERATIONS, AND MAINTENANCE (IOM) MANUALS ARE TO BE SUBMITTED TO THE COMMISSIONING AUTHORITY TWO WEEKS AFTER RECEIVING APPROVED SHOP DRAWINGS OR TWO WEEKS AFTER ORDERING THE EQUIPMENT; WHICHEVER OCCURS FIRST.
4. PROPOSE CORRECTIVE ACTIONS AND PROVIDE STATUS UPDATES OF DEFICIENCIES IDENTIFIED IN THE ISSUES REPORT.
5. SUBMIT PRE-FUNCTIONAL CHECKLISTS COMPLETED BY THE INSTALLING CONTRACTOR TO THE COMMISSIONING AUTHORITY WITHIN ONE WEEK OF COMPLETION.
6. APPROVED SEQUENCE OF OPERATION IS TO BE SUBMITTED TO THE COMMISSIONING AUTHORITY TWO WEEKS AFTER RECEIVING APPROVED SHOP DRAWINGS.
7. OPERATIONS AND MAINTENANCE TRAINING PLAN IS TO BE SUBMITTED TO THE COMMISSIONING AUTHORITY ONE WEEK PRIOR TO SUBSTANTIAL COMPLETION IF REQUESTED BY THE OWNER.
8. SUBMIT THE TEST, ADJUST AND BALANCE (TAB) REPORT TO THE COMMISSIONING AUTHORITY WITHIN ONE WEEK OF COMPLETION.
9. CONFIRM READINESS OF LIGHTING CONTROL SYSTEM BY WITNESSING 10% OF CONTROL SYSTEM INTEGRATION AS PERFORMED BY A LUTRON REPRESENTATIVE.
10. NOTIFY THE COMMISSIONING AUTHORITY IN WRITING WHEN AN ENTIRE SYSTEM IS READY TO DEMONSTRATE THE FUNCTIONAL PERFORMANCE TEST.
11. SUBMIT WARRANTY DOCUMENTATION TO THE OWNER AND COMMISSIONING AUTHORITY PRIOR TO PROJECT CLOSEOUT.
12. SUBMIT O&M DOCUMENTATION TO THE COMMISSIONING AUTHORITY ONE WEEK PRIOR TO SUBSTANTIAL COMPLETION.
C. COMMISSIONING AGENT (CXA):
1. COMMISSIONING AUTHORITY TO REVIEW THE 75% AND/OR 90% BASIS OF DESIGN AND PROVIDE PEER REVIEW COMMENTS ON FUTURE DESIGN SUBMISSIONS
2. ORGANIZE AND LEAD THE COMMISSIONING TEA
3. PROVIDE COMMISIONING PLAN
4. CONCENE COMMISSIONING TEAM MEETINGS
5. PROVIDE PROJECT-SPECIFIC SOMMISSIONING CHECKLISTS
6. VERIFY THE EXECUTION OF COMMISSIONING PROCESS ACTIVITIES. VERIFICATION WILL INCLUDE, BUT NOT BE LIMITED TO: EQUIPMENT SUBMITTALS, COMMISSIONING CHECKLISTS, OPERATING AND MAINTENANCE DATA, TESTS, AND TEST REPORTS TO VERIFY COMPLIANCE WITH CONSTRUCTION DOCUMENTS. WHEN A RANDOM SAMPLE DOES NOT MEET THE REQUIREMENT, THE CXA WILL REPORT THE FAILURE IN THE ISSUES LOG
7. PREPARE AND MAINTAIN THE ISSUES LOG
8. DEFICIENCES: THE CXA WILL DETERMINE AND ADVISE THE OWNER AND GC OF THE DATE OF THE DEFICIENCIES FOR EACH COMPONENT AND SYSTEM
9. ACCEPTANCE: THE CXA WILL DETERMINE AND ADVISE THE OWNER AND GC OF THE DATE OF THE ACCEPTANCE FOR EACH COMPONENT AND SYSTEM
10. PREPARE AND MAINTAIN COMPLETED COMMISSIONING CHECKLIST LOG
11. PERFORM FUNCTIONAL TESTS: THE CXA WILL PERFORM AND COORDINATE TESTING AS REQUIRED TO ENSURE SYSTEM PERFORMANCE MEETS THE DESIGN INTENT.
12. DOCUMENTATION OF TESTS: THE CXA WILL DOCUMENT THE RESULTS OF THE FUNCTIONAL PERFORMANCE TEST DIRECTLY AND/OR ENSURE THAT THE APPROPRIATE TECHNICIANS DOCUMENT ALL TESTING. THE CXA WILL PROVIDE STANDARD FORMS TO USE BY ALL PARTIES FOR CONSISTENCY OF APPROACH AND TYPE OF INFORMATION TO BE RECORDED.
13. COMPILE TEST DATA, INSPECTION REPORTS, AND CERTIFICATES: INCLUDE THEM IN THE SYSTEMS MANUAL AND COMMISSIONING PROCESS REPORT

3.5 MEETINGS

A. COMMISSIONING KICK-OFF MEETING:
1. COMMISSIONING AUTHORITY SHALL ISSUE THE COMMISSIONING PLAN AT LEAST ONE WEEK PRIOR TO THE KICK-OFF MEETING.
2. CONSTRUCTION MANAGER, CONTRACTORS, AND INSTALLING CONTRACTORS SHALL ATTEND THE COMMISSIONING MEETING.
3. COMMISSIONING AUTHORITY SHALL CONDUCT THE KICK-OFF MEETING WHERE THE COMMISSIONING TEAM WILL BE INTRODUCED TO THE COMMISSIONING PROCESS AND THEIR RESPONSIBILITIES.
B. COMMISSIONING MEETINGS:
1. COMMISSIONING AUTHORITY SHALL CONDUCT REGULARLY SCHEDULED COMMISSIONING MEETINGS TO DISCUSS COMMISSIONING ACTIVITIES. THE FOLLOWING MEETINGS MAY BE CONDUCTED:
a. CONTRACTOR KICK-OFF
b. UPDATES
c. PRE-START UP
d. OPERATIONS AND MAINTENANCE TRAINING PLAN IF REQUESTED BY THE OWNER
e. PRE-FUNCTIONAL PERFORMANCE TEST
f. POST-FUNCTIONAL PERFORMANCE TEST
2. INSTALLING CONTRACTORS SHALL ATTEND THE COMMISSIONING MEETINGS AS DIRECTED BY THE COMMISSIONING AUTHORITY.

3.6 PRE-FUNCTIONAL CHECKLISTS

A. DOCUMENTATION:
1. COMMISSIONING AUTHORITY SHALL PREPARE PRE-FUNCTIONAL CHECKLISTS TO BE COMPLETED BY THE INSTALLING CONTRACTOR AND VERIFIED BY THE COMMISSIONING AUTHORITY.
2. PRE-FUNCTIONAL CHECKLISTS WILL IDENTIFY THE MINIMUM COMMISSIONING INSPECTIONS AND WILL BE DEVELOPED ACCORDING TO THE PROJECT REQUIREMENTS AND THE MANUFACTURER'S INSTALLATION RECOMMENDATIONS.
3. CHECKLISTS WILL BE ISSUED IN PDF OR EXCEL FORMAT.
B. CONSTRUCTION PHASES:
1. CHECKLISTS WILL BE PREPARED IN SECTIONS ACCORDING TO CONSTRUCTION PROGRESS.
2. INSTALLING CONTRACTOR WILL COMPLETE THE APPROPRIATE SECTIONS OF THE CHECKLISTS AS CONSTRUCTION PROGRESSES. CHECKLISTS SHALL BE COMPLETED AND SUBMITTED TO THE COMMISSIONING AUTHORITY WITHIN ONE WEEK OF COMPLETION.
C. PRE-INSTALLATION:
1. VERIFY THAT EQUIPMENT HAS BEEN RECEIVED WITHOUT DAMAGE.
2. RECEIVED EQUIPMENT IS THE EQUIPMENT THAT WAS APPROVED.
3. EQUIPMENT IS BEING PROPERLY STORED AND PROTECTED FROM DIRT, DUST, AND MOISTURE.
D. INSTALLATION:
1. VERIFY THAT EQUIPMENT, COMPONENTS, AND INTEGRATED SYSTEMS HAVE BEEN SUPPORTED, INSTALLED, AND ACCESSIBLE FOR SERVICE AND MAINTENANCE.
2. COMPLETED CHECKLIST SECTIONS SHALL BE SUBMITTED ONE WEEK AFTER EQUIPMENT IS AND COMPONENTS HAVE BEEN INSTALLED.
E. START-UP:
1. VERIFY THAT DISTRIBUTION AND INTEGRATED SYSTEMS HAVE BEEN CHECKED, TESTED, AND BALANCED.
2. EQUIPMENT AND COMPONENTS HAVE BEEN CHECKED, TESTED, AND READY FOR START-UP.
3. MANUFACTURER OR SUBCONTRACTOR CREATED START-UP REPORTS SHOULD BE UTILIZED DURING EQUIPMENT START-UP.
4. START-UP REPORTS SHALL BE SUBMITTED WITHIN ONE WEEK OF COMPLETION TO THE COMMISSIONING AUTHORITY..
F. PRE-FUNCTIONAL PERFORMANCE TEST:
1. VERIFY THAT EQUIPMENT HAS BEEN SUCCESSFULLY STARTED-UP.
2. INTEGRATED SYSTEMS HAVE BEEN BALANCED AND/OR COMPLETED.
3. DEFICIENCIES HAVE BEEN RECTIFIED, AND THE ENTIRE SYSTEM IS READY FOR FUNCTIONAL PERFORMANCE TESTING.
4. COMPLETED CHECKLIST SECTIONS SHALL BE SUBMITTED NO LATER THAN ONE WEEK BEFORE FUNCTIONAL PERFORMANCE TESTING OR IMMEDIATELY AFTER SCHEDULING THE TESTING DATE WHICHEVER IS SOONER.
G. VERIFICATION: COMMISSIONING SPECIALIST SHALL VERIFY THE ACCURACY OF THE COMPLETED CHECKLISTS BY INSPECTING ALL OF THE CHECKLISTS AND THEN SIGNING OFF ON EACH FORM.

3.7 ISSUES REPORT

A. COMMISSIONING AUTHORITY SHALL DOCUMENT THE DEFICIENCIES FOUND ON THE PROJECT IN A REGULARLY UPDATED ISSUES REPORT. ISSUES REPORT WILL BE DISTRIBUTED TO THE CX TEAM ON A REGULAR BASIS.
B. IDENTIFY THE PROJECT DEFICIENCIES, PROPOSED RESOLUTION, RESPONSIBLE PARTY, AND DATE DEFICIENCY WAS RESOLVED.
C. INSTALLING CONTRACTORS SHALL RESPOND TO THE COMMISSIONING AUTHORITY AND RESOLVE DEFICIENCIES WITHIN ONE WEEK OF ISSUANCE.

3.8 FUNCTIONAL PERFORMANCE TEST

A. THE FUNCTIONAL PERFORMANCE TESTS DEMONSTRATE THAT THE COMMISSIONED SYSTEMS OPERATE AS THE OWNER AND DESIGN TEAM EXPECTED.
1. MAJOR EQUIPMENT AND RANDOMLY SELECTED COMPONENTS ARE TESTED TO ENSURE COMPLIANCE.
2. INTERCONNECTED SYSTEMS ARE TESTED TO ENSURE COMPLIANCE.
3. EQUIPMENT IS OPERATED IN THE VARIOUS MODES (OCCUPIED, UNOCCUPIED, HEATING, COOLING, ETC.) OF OPERATION.
B. INSTALLING CONTRACTORS SHALL DEMONSTRATE THE FUNCTIONAL PERFORMANCE TEST:
1. INSTALLING CONTRACTORS SHALL NOTIFY THE COMMISSIONING AUTHORITY, IN WRITING, WHEN THE ENTIRE SYSTEM HAS BEEN CHECKED AND IS READY FOR TESTING.
2. INSTALLING CONTRACTORS SHALL PROVIDE EXPERIENCED TECHNICIANS TO SUPPORT THE FUNCTIONAL PERFORMANCE TEST.
3. INSTALLING CONTRACTORS SHALL PROVIDE TOOLS, TEST EQUIPMENT, LADDERS, 2-WAY RADIOS, AND ANY OTHER MATERIALS REQUIRED TO PERFORM THE FUNCTIONAL PERFORMANCE TESTS.
C. COMMISSIONING SPECIALIST SHALL SCHEDULE THE FUNCTIONAL PERFORMANCE TEST:
1. COMMISSIONING SPECIALIST SHALL COORDINATE ALL MANPOWER, TOOLS, AND EQUIPMENT REQUIRED FOR THE FUNCTIONAL PERFORMANCE TEST.
2. COMMISSIONING SPECIALIST SHALL NOTIFY THE COMMISSIONING AUTHORITY, IN WRITING, TO CONFIRM THE FUNCTIONAL PERFORMANCE TEST SCHEDULE.
D. COMMISSIONING AUTHORITY SHALL PREPARE THE FUNCTIONAL PERFORMANCE TEST PROCEDURE ACCORDING TO THE APPROVED SEQUENCE OF OPERATION. COMMISSIONING AUTHORITY WILL CONDUCT THE PERFORMANCE TESTS AND DOCUMENT THE TEST DATA.
E. DEFICIENCIES IDENTIFIED DURING THE FUNCTIONAL PERFORMANCE TEST SHALL BE DOCUMENTED BY THE COMMISSIONING AUTHORITY.
1. DEFICIENCIES THAT IMPACT THE CONTINUATION OF THE FUNCTIONAL PERFORMANCE TEST MUST BE CORRECTED BEFORE CONTINUING THE TEST. TESTING WILL BE STOPPED IF DEFICIENCIES CANNOT BE IMMEDIATELY RESOLVED AND THE COMMISSIONING SPECIALIST WILL SCHEDULE THE RE-TEST.
2. DEFICIENCIES THAT DO NOT IMPACT THE CONTINUATION OF THE FUNCTIONAL PERFORMANCE TEST SHALL BE CORRECTED BEFORE SCHEDULING THE RE-TEST. COMMISSIONING AUTHORITY SHALL IDENTIFY THE DEFICIENCY AND THE RECOMMENDED RESOLUTION AND CONTINUE THE TEST.
3. SYSTEMS WILL BE RE-TESTED UNTIL ALL IDENTIFIED DEFICIENCIES HAVE BEEN RESOLVED.
4. SYSTEMS WILL BE ACCEPTED WHEN PROPER OPERATION IS DEMONSTRATED.
F. EACH COMMISSIONED SYSTEM WILL BE TESTED ONE TIME. IF DEFICIENCIES ARE IDENTIFIED DURING THE INITIAL TEST, THE SYSTEM WILL BE RE-TESTED ONE TIME.
1. IF DEFICIENCIES ARE IDENTIFIED DURING THE RE-TEST, THE SYSTEM WILL BE RE-TESTED UNTIL IT IS FOUND ACCEPTABLE.
2. GENERAL CONTRACTOR WILL BE CHARGED FOR ALL SYSTEMS THAT REQUIRE A SECOND (OR MORE) RE-TEST. COMMISSIONING AUTHORITY WILL INVOICE THE OWNER, AT THE CURRENT HOURLY RATES, FOR ALL TIME INVOLVED WITH THE ADDITIONAL RE-TESTS.
3. ADDITIONAL RE-TEST INVOICES ARE DUE 30 DAYS FROM DATE OF RE-TEST.

3.9 OPERATIONS AND MAINTENANCE TRAINING

A. COMMISSIONING SPECIALIST SHALL PREPARE AND COMPILE ALL OPERATIONS AND MAINTENANCE DOCUMENTATION.
1. SUBMIT ONE COPY OF THE OPERATIONS AND MAINTENANCE DOCUMENTATION TO THE OWNER, COMMISSIONING AUTHORITY AND ARCHITECT OF RECORD FOR REVIEW ONE WEEK PRIOR TO SUBSTANTIAL COMPLETION.
2. COMMISSIONING AUTHORITY AND ARCHITECT OF RECORD WILL REVIEW THE OPERATIONS AND MAINTENANCE DOCUMENTATION FOR COMPLETENESS AND COMPLIANCE.
B. COMMISSIONING SPECIALIST SHALL PREPARE THE OPERATIONS AND MAINTENANCE TRAINING AGENDA IF REQUESTED BY OWNER
1. SUBMIT OPERATIONS AND MAINTENANCE TRAINING AGENDA TO THE COMMISSIONING AUTHORITY AND OWNER'S PROJECT MANAGER FOR REVIEW SIX WEEKS BEFORE OPERATIONS AND MAINTENANCE TRAINING.
2. COMMISSIONING AUTHORITY AND OWNER'S PROJECT MANAGER WILL REVIEW THE OPERATIONS AND MAINTENANCE TRAINING AGENDA FOR COMPLETENESS AND COMPLIANCE.
C. COMMISSIONING SPECIALIST AND OWNER'S PROJECT MANAGER WILL SCHEDULE AND COORDINATE THE OPERATIONS AND MAINTENANCE TRAINING SESSIONS. PROVIDE COMMISSIONING AUTHORITY WITH TWO WEEKS NOTICE FOR OPERATIONS AND MAINTENANCE TRAINING SESSIONS.
D. COMMISSIONING AUTHORITY MAY ATTEND SELECT OPERATIONS AND MAINTENANCE TRAINING SESSIONS.

**END OF SECTION**

**SECTION 03 35 15**

**CONCRETE FINISHING**

PART 1 GENERAL

1.1 SUMMARY

A. PROVIDE STAINED AND POLISHED CONCRETE FLOOR FINISHES.

1.2 SUBMITTALS

A. PRODUCT DATA: SUBMIT MANUFACTURER'S PRODUCT DATA AND INSTALLATION INSTRUCTIONS FOR EACH MATERIAL AND PRODUCT USED. INCLUDE CHEMICAL AND VOC CONTENT.
B. SAMPLES: IN LIEU OF SAMPLES, SUBMIT PHOTOGRAPHS INDICATING VISUAL CHARACTERISTICS AND FINISH. INCLUDE MULTIPLE PHOTOS IF VARIATION OF FINISH IS ANTICIPATED.

1.3 QUALITY ASSURANCE

A. COMPLY WITH GOVERNING CODES AND REGULATIONS. PROVIDE PRODUCTS OF ACCEPTABLE MANUFACTURERS WHICH HAVE BEEN IN SATISFACTORY USE IN SIMILAR SERVICE FOR THREE YEARS. USE EXPERIENCED INSTALLERS. DELIVER, HANDLE, AND STORE MATERIALS IN ACCORDANCE WITH MANUFACTURER'S INSTRUCTIONS.
B. REGULATIONS: COMPLIANCE WITH VOC AND ENVIRONMENTAL REGULATIONS.

PART 2 PRODUCTS

2.1 MATERIALS

A. POLISHED CONCRETE FLOOR FINISHES (PC-2):
1. MANUFACTURERS: ADVANCED FLOOR PRODUCTS; L.M. SCOFIELD CO.; PROSOCO; OR APPROVED EQUAL.
a. BASIS OF DESIGN: L.M. SCOFIELD CO.
2. MATERIALS:
a. WATER-BASED COLOR STAINS OR DYES.
b. CONCRETE STABILIZER.
c. PROTECTIVE COATINGS AND FINISH SEALERS.
3. FINISH: REFER TO DRAWINGS.

PART 3 EXECUTION

3.1 INSTALLATION

A. INSPECT SURFACES, REPORT UNSATISFACTORY CONDITIONS IN WRITING; BEGINNING WORK MEANS ACCEPTANCE OF SUBSTRATE.
B. INSTALL MATERIALS IN ACCORDANCE WITH MANUFACTURER'S INSTRUCTIONS AND APPROVED SUBMITTALS. INSTALL MATERIALS IN PROPER RELATION WITH ADJACENT CONSTRUCTION AND WITH UNIFORM APPEARANCE. COORDINATE WITH WORK OF OTHER SECTIONS.
1. GRIND CONCRETE SUBSTRATE.
2. APPLY STAIN. NEUTRALIZE AND FLUSH WITH CLEAN POTABLE WATER.
3. APPLY CONCRETE STABILIZER.
4. POLISH CURED SURFACES.
5. APPLY PROTECTIVE COATINGS AND FINISH SEALERS.
C. RESTORE DAMAGED FINISHES. CLEAN AND PROTECT WORK FROM DAMAGE.

**END OF SECTION**

**SECTION 04 21 30**

**THIN BRICK**

PART 1 GENERAL

1.1 SUMMARY

A. PROVIDE THIN BRICK CONSTRUCTION.

1.2 SUBMITTALS

A. PRODUCT DATA: SUBMIT MANUFACTURER'S PRODUCT DATA AND INSTALLATION INSTRUCTIONS FOR EACH MATERIAL AND PRODUCT USED.
B. SHOP DRAWINGS: SUBMIT SHOP DRAWINGS INDICATING MATERIAL CHARACTERISTICS, DETAILS OF CONSTRUCTION, CONNECTIONS, AND RELATIONSHIP WITH ADJACENT CONSTRUCTION.
1. SHOP DRAWINGS SHALL BE PREPARED AND STAMPED BY A QUALIFIED ENGINEER LICENSED IN THE JURISDICTION OF THE PROJECT.

1.3 QUALITY ASSURANCE

A. COMPLY WITH GOVERNING CODES AND REGULATIONS. PROVIDE PRODUCTS OF ACCEPTABLE MANUFACTURERS WHICH HAVE BEEN IN SATISFACTORY USE IN SIMILAR SERVICE FOR THREE YEARS. USE EXPERIENCED INSTALLERS. DELIVER, HANDLE, AND STORE MATERIALS N ACCORDANCE WITH MANUFACTURER'S INSTRUCTIONS.

PART 2 PRODUCTS

2.1 MATERIALS

A. THIN BRICK VENEER (**BV-1, BV-2**)
1. APPLICATION: THIN BRICK VENEER AT EXTERIOR WALLS; NON-BEARING.
2. PROFILE: FACING BRICK; ASTM C216. INCLUDE MATCHING CORNER PIECES
a. GRADE: SW.
b. TYPE: FBX.
3. PRODUCT: ELDORADO STONE, TUNDRABRICK
4. SIZE: (STANDARD) SIZE (ACTUAL DIMENSIONS): 7/8 INCHES WIDE BY 2-1/2 INCHES HIGH BY 7-5/8 INCHES LONG.
5. RUNNING BOND;
6. COLOR: REFER TO FINISH SCHEDULE (A601)
B. THIN SET MORTAR
1. CEMENT: PORTLAND CEMENT COMPLYING WITH ASTM C 1329
2. LIME: ASTM C 207
3. SAND: ASTM C 144, NATURAL OR MANUFACTURED SAND
4. COLOR PIGMENTS; ASTM C 979, MINERAL OXIDE PIGMENTS. TO BE REVIEWED AND APPROVED BY ARCHITECT.
5. WATER: POTABLE
6. PRE-PACKAGED LATEX-PORTLAND CEMENT MORTAR; ANSI A118.4
C. REINFORCING
1. METAL LATH
a. ASTM C 847, GALVANIZED EXPANDED METAL LATH
D. WEATHER BARRIER
1. ASTM D 226, TYPE 1, NO. 15, NON-PERFORATED ASPHAULT-SATURATED FELT PAPER OR UBC STANDARD 14-1, KRAFT WATERPROOF BUILDING PAPER.

PART 3 EXECUTION

3.1 INSTALLATION

A. INSTALLATION OF MASONRY ASSEMBLIES:
1. COMPLY WITH PCA RECOMMENDED PRACTICES FOR LAYING CONCRETE BLOCK AND NCMA TEK BULLETINS.
2. SAW CUT UNITS WHEN REQUIRED. MAINTAIN UNIFORM JOINT WIDTH. PROVIDE FULL BED, HEAD AND COLLAR JOINTS EXCEPT AT WEEPHOLES.
3. INSTALL ACCESSORIES IN MASONRY CONSTRUCTION.
4. COORDINATE INSTALLATION OF FLASHINGS.
a. FOLLOW RECOMMENDATIONS OF SMACNA SHEET METAL MANUAL. ALLOW FOR EXPANSION. ISOLATE DISSIMILAR MATERIALS.
5. COMPLY WITH APPLICABLE CODES AND REGULATIONS FOR BRICK SUPPORT AND REINFORCEMENT.
6. PROVIDE EXPANSION AND CONTROL JOINTS IN ACCORDANCE WITH NCMA RECOMMENDATIONS.
7. REMOVE AND REPLACE DAMAGED UNITS.
8. CLEAN CONCRETE MASONRY BY DRY BRUSHING, NCMA TEK NO. 28.

**END OF SECTION**

**SECTION 05 40 00**

**COLD-FORMED METAL FRAMING**

PART 1 GENERAL

1.1 SUMMARY

A. PROVIDE COLD-FORMED METAL FRAMING.

1.2 SUBMITTALS

A. PRODUCT DATA: SUBMIT MANUFACTURER'S PRODUCT DATA AND INSTALLATION INSTRUCTIONS FOR EACH MATERIAL AND PRODUCT USED.
B. SHOP DRAWINGS: SUBMIT SHOP DRAWINGS INDICATING MATERIAL CHARACTERISTICS, DETAILS OF CONSTRUCTION, CONNECTIONS, AND RELATIONSHIP WITH ADJACENT CONSTRUCTION.
1. SHOP DRAWINGS SHALL BE PREPARED AND STAMPED BY A QUALIFIED ENGINEER LICENSED IN THE JURISDICTION OF THE PROJECT.
C. ENGINEERING CERTIFICATION: SUBMIT FOR APPROVAL ENGINEERING CERTIFICATION OF DEFLECTION CRITERIA.

1.3 QUALITY ASSURANCE

A. COMPLY WITH GOVERNING CODES AND REGULATIONS. PROVIDE PRODUCTS OF ACCEPTABLE MANUFACTURERS WHICH HAVE BEEN IN SATISFACTORY USE IN SIMILAR SERVICE FOR THREE YEARS. USE EXPERIENCED INSTALLERS. DELIVER, HANDLE, AND STORE MATERIALS IN ACCORDANCE WITH MANUFACTURER'S INSTRUCTIONS.
B. STANDARDS: AISI, SPECIFICATION FOR DESIGN OF COLD-FORMED STEEL STRUCTURAL MEMBERS.
C. FABRICATION TOLERANCES: 1/8 INCH IN 10 FEET.

PART 2 PRODUCTS

2.1 MATERIALS

A. COLD-FORMED METAL FRAMING:
1. MANUFACTURERS: AEGIS METAL FRAMING LLC; TRUSSTEEL, AN ITW COMPANY; CEMCO/CALIFORNIA EXPANDED METAL PRODUCTS CO.; CLARKDIETRICH BUILDING SYSTEMS; MARINO/WARE; NUCONSTEEL, A NUCOR COMPANY; OR APPROVED EQUAL.
2. APPLICATION: EXTERIOR NONLOADBEARING STEEL-STUD WALLS.
3. WALL FRAMING: C-SHAPED LOADBEARING STEEL STUDS.
4. UNITS 16 GAUGE (.0598 INCH) AND HEAVIER: ASTM A 653, YIELD POINT 50,000.
5. UNITS 18 GAUGE (.0358 INCH): ASTM A 653, YIELD POINT 37,000 PSI.
6. FINISH: GALVANIZED, ASTM A 653, G60.
7. FRAMING ACCESSORIES:
a. BRACING, BRIDGING, AND SOLID BLOCKING.
b. DEFLECTION TRACK AND VERTICAL SIDE CLIPS.
c. STUD KICKERS AND GIRTS.
d. ANCHORS, CLIPS, AND FASTENERS.

PART 3 EXECUTION

3.1 INSTALLATION

A. INSTALL MATERIALS AND SYSTEMS IN ACCORDANCE WITH MANUFACTURER'S INSTRUCTIONS AND APPROVED SUBMITTALS. INSTALL MATERIALS AND SYSTEMS IN PROPER RELATION WITH ADJACENT CONSTRUCTION. COORDINATE WITH WORK OF OTHER SECTIONS.
B. COMPLY WITH REQUIREMENTS OF ASTM C 1007 FOR INSTALLATION OF STEEL STUDS AND ACCESSORIES AND METAL LATH/STEEL FRAMING ASSOCIATION LIGHTWEIGHT STEEL FRAMING SYSTEMS MANUAL.
1. ERECTION TOLERANCES: 1/16 INCH FROM TRUE POSITION.
C. RESTORE DAMAGED COMPONENTS. PROTECT WORK FROM DAMAGE.

**END OF SECTION**

**SECTION 05 50 00**

**METAL FABRICATIONS**

PART 1 GENERAL

1.1 SUMMARY

A. PROVIDE METAL FABRICATIONS.

1.2 SUBMITTALS

A. PRODUCT DATA: SUBMIT MANUFACTURER'S PRODUCT DATA AND INSTALLATION INSTRUCTIONS FOR EACH MATERIAL AND PRODUCT USED.
B. SHOP DRAWINGS: SUBMIT SHOP DRAWINGS INDICATING MATERIAL CHARACTERISTICS, DETAILS OF CONSTRUCTION, CONNECTIONS, AND RELATIONSHIP WITH ADJACENT CONSTRUCTION.
1. SHOP DRAWINGS SHALL BE PREPARED AND STAMPED BY A QUALIFIED ENGINEER LICENSED IN THE JURISDICTION OF THE PROJECT.

1.3 QUALITY ASSURANCE

A. COMPLY WITH GOVERNING CODES AND REGULATIONS. PROVIDE PRODUCTS OF ACCEPTABLE MANUFACTURERS WHICH HAVE BEEN IN SATISFACTORY USE IN SIMILAR SERVICE FOR THREE YEARS. USE EXPERIENCED INSTALLERS. DELIVER, HANDLE, AND STORE MATERIALS IN ACCORDANCE WITH MANUFACTURER'S INSTRUCTIONS.

PART 2 PRODUCTS

2.1 MATERIALS

A. METAL FABRICATIONS:
1. APPLICATION: ROUGH HARDWARE.
2. APPLICATION: STEEL LADDERS AND SUPPORTS, FOR ROOF ACCESS.
3. APPLICATION: MISCELLANEOUS FRAMING AND SUPPORTS.
4. APPLICATION: ZINC-RICH PRIMED AND PAINTED STEEL FRAMING ANS SUPPORTS, FOR EXTERIOR CANOPY.
5. APPLICATION: ZINC-RICH PRIMED AND PAINTED STEEL FOR PLANTERS, EXTERIOR RAILINGS AND PIPE BOLLARDS.
6. APPLICATION: METAL FRAMING AND SUPPORTS FOR COUNTERTOPS AND LOW WALLS.
7. FERROUS MATERIALS:
a. STEEL PLATES, SHAPES AND BARS: ASTM A 36.
b. ROLLED STEEL FLOOR PLATES: ASTM A 786.
c. STEEL TUBING: ASTM A 500 OR A 501.
d. UNCOATED STRUCTURAL STEEL SHEET: ASTM A 611 OR A 570.
e. UNCOATED STEEL SHEET: ASTM A 366 OR A 569.
f. GALVINIZED STEEL SHEET: ASTM A 653, G90
g. STEEL PIPE, BLACK FINISH: ASTM A 53.
h. GRAY IRON CASTINGS: ASTM A 48, CLASS 30.
i. MALLEABLE IRON CASTINGS: ASTM A 47, GRADE 32510.
j. REINFORCING BARS: ASTM A 615, GRADE 60.
k. BRACKETS, FLANGES, AND ANCHORS: CAST OR FORMED METAL.
l. CONCRETE INSERTS: THREADED OR WEDGE TYPE.
m. WELDING RODS AND BARE ELECTRODES: AWS SPECIFICATIONS.
n. ZINC-COATING: HOT-DIP GALVINIZED COATING FOR MATERIALS IN EXTERIOR ASSEMBLIES OR EXTERIOR WALLS
8. FASTENERS:
a. BOLTS AND NUTS: HEXAGON HEAD TYPE, ASTM A 307, GRADE A.
b. LAG BOLTS: SQUARE HEAD, FS FF-B-561.
c. MACHINE SCREWS: CADMIUM PLATED STEEL, FS FF-S-92.
d. WOOD SCREWS: FLAT HEAD CARBON STEEL, FS FF-S-111.
e. PLAIN WASHERS: ROUND CARBON STEEL, FS FF-W-92.
f. DRILLED-IN EXPANSION ANCHORS: FS FF-S-325.
g. TOGGLE BOLTS: TUMBLE-WING TYPE, FS FF-B-588.
h. LOCK WASHERS: SPRING TYPE CARBON STEEL, FS FF-W-84.
i. ZINC-COATING: FASTENERS IN EXTERIOR ASSEMBLIES OR EXTERIOR WALLS.
9. AUXILIARY MATERIALS:
a. NONSHRINK METALLIC GROUT: ASTM C 1107.
b. NONSHRINK NONMETALLIC GROUT: ASTM C 1107.
c. INTERIOR ANCHORING CEMENT: HYDRAULIC EXPANSION CEMENT.
d. SHOP PRIMER: FAST CURING, LEAD- AND CHROMATE-FREE, UNIVERSAL MODIFIED-ALKYD PRIMER COMPLYING WITH MPI#79, COMPATIBLE WITH TOPCOATS.
e. ZINC-RICH PRIMER: COMPLYING WITH SSPC-PAINT 20 OR SSPC-PAINT 29 AND COMPATIBLE WITH TOPCOAT.
f. GALVINIZED REPAIR PAINT: SSPC - PAINT 20.
g. BITUMINOUS PAINT: ASPHALT MASTIC, ASTM D 1187.
10. FACTORY FINISH: POWDER-COATED PAINT SYSTEM

PART 3 EXECUTION

3.1 INSTALLATION

A. TAKE FIELD MEASUREMENTS PRIOR TO PREPARATION OF SHOP DRAWINGS AND FABRICATION. DO NOT DELAY JOB; ALLOW FOR CUTTING AND FITTING IF FIELD MEASUREMENT NOT PRACTICAL.
B. FORM WORK TRUE TO LINE WITH SHARP ANGLES AND EDGES. WELD CONTINUOUSLY, GRIND FLUSH AND MAKE SMOOTH ON EXPOSED SURFACES.
C. INSTALL WORK PLUMB AND LEVEL WITH HAIRLINE JOINTS AND GROUND FLUSH WELDS.
D. TOUCH UP DAMAGED COATINGS WITH SHOP PRIMER.
E. PAINT ITEMS SCHEDULED IN ACCORDANCE WITH PAINTING SECTION.

**END OF SECTION**

**SECTION 06 10 00**

**ROUGH CARPENTRY**

PART 1 GENERAL

1.1 SUMMARY

A. PROVIDE ROUGH CARPENTRY.

1.2 QUALITY ASSURANCE

A. COMPLY WITH GOVERNING CODES AND REGULATIONS. PROVIDE PRODUCTS OF ACCEPTABLE MANUFACTURERS WHICH HAVE BEEN IN SATISFACTORY USE IN SIMILAR SERVICE FOR THREE YEARS. USE EXPERIENCED INSTALLERS. DELIVER, HANDLE, AND STORE MATERIALS IN ACCORDANCE WITH MANUFACTURER'S INSTRUCTIONS.
B. LUMBER STANDARDS AND GRADE STAMPS: DOC PS 20, AMERICAN SOFTWOOD LUMBER STANDARD AND INSPECTION AGENCY GRADE STAMPS.
C. CONSTRUCTION PANEL STANDARDS: DOC PS 1, U.S. PRODUCT STANDARD FOR CONSTRUCTION AND INDUSTRIAL PLYWOOD; APA PRP-108.
D. PRESERVATIVE TREATMENT: AWPA C2 FOR LUMBER AND AWPA C9 FOR PLYWOOD; WATERBORNE PRESSURE TREATMENT. PROVIDE FOR WOOD IN CONTACT WITH SOIL, CONCRETE, MASONRY, ROOFING, FLASHING, DAMPPROOFING AND WATERPROOFING.
E. FIRE-RETARDANT TREATMENT: AWPA C20 FOR LUMBER AND AWPA C27 FOR PLYWOOD; NONCORROSIVE TYPE. PROVIDE AT BUILDING INTERIOR WHERE REQUIRED BY CODE.

Bergmeyer
BOS - 51 Sleeper St. 6th Floor Boston, MA 02210 617.542.1025
LA - 800 South Figueroa St. Suite 1080 Los Angeles, CA 90017 212.337.1090
www.bergmeyer.com

CONSULTANTS:

SEAL/ SIGNATURE:

| NO. | BY | DATE | DESCRIPTION |
|---|---|---|---|
| | | 2021-01-11 | PERMIT/BID SET |
| | | 2020-12-21 | 75% SET |

SHAKE SHACK

SHAKE SHACK - LEE'S SUMMIT MO

2051 NW LOWENSTEIN DRIVE
LEE'S SUMMIT, MISSOURI 64081
SHACK #1348

PERMIT/BID SET

ARCHITECTURAL SPECIFICATIONS

DRAWN BY: CS & WQL
CHECKED BY: JS
JOB NO: 20068.00

A702

C:\Users\qlevine\Documents\068_Shake Shack-Lee's Summit_Central_qlevine@bergmeyer.com.rvt
1/11/2021 6:08:54 PM

RELEASE FOR CONSTRUCTION
AS NOTED ON PLANS REVIEW
DEVELOPMENT SERVICES
LEE'S SUMMIT, MISSOURI
03/10/2021

PART 2 PRODUCTS

2.1 MATERIALS

A. ROUGH CARPENTRY APPLICATIONS:
   1. APPLICATION: WOOD GROUNDS, NAILERS, AND BLOCKING.
   2. APPLICATION: WOOD FURRING.
   3. APPLICATION: BACKING PANELS.
   4. SUSTAINABLE DESIGN: LOW-EMITTING MATERIALS, NO ADDED UREA-FORMALDEHYDE.
   5. SUSTAINABLE DESIGN: FSC CERTIFIED.
   6. DIMENSION LUMBER:
      a. LIGHT FRAMING: STUD, NO. 3 OR STANDARD GRADE.
      b. SPECIES: ANY SPECIES OF GRADE INDICATED.
      c. MOISTURE CONTENT: 19 PERCENT.
   7. CONSTRUCTION PANELS:
      a. TELEPHONE AND ELECTRICAL EQUIPMENT BACKING PANELS: DOC PS 1, EXPOSURE 1, C-D PLUGGED, FIRE-RETARDANT TREATED.
   8. FASTENERS: NON-CORROSIVE, SUITABLE FOR LOAD AND EXPOSURE. DRYWALL SCREWS ARE NOT ACCEPTABLE.

PART 3 EXECUTION

3.1 INSTALLATION

A. SECURELY ATTACH ROUGH CARPENTRY WORK TO SUBSTRATE BY ANCHORING AND FASTENING AS INDICATED.
B. PLYWOOD: COMPLY WITH APPLICABLE RECOMMENDATIONS CONTAINED IN APA FORM NO. E30K, "APA DESIGN/CONSTRUCTION GUIDE: RESIDENTIAL & COMMERCIAL."
C. PROVIDE NAILERS, BLOCKING AND GROUNDS WHERE REQUIRED. SET WORK PLUMB, LEVEL AND ACCURATELY CUT.
D. INSTALL MATERIALS AND SYSTEMS IN ACCORDANCE WITH MANUFACTURER'S INSTRUCTIONS. INSTALL MATERIALS AND SYSTEMS IN PROPER RELATION WITH ADJACENT CONSTRUCTION. COORDINATE WITH OTHER WORK.
E. COMPLY WITH MANUFACTURER'S REQUIREMENTS FOR CUTTING, HANDLING, FASTENING AND WORKING TREATED MATERIALS.
F. RESTORE DAMAGED COMPONENTS. PROTECT WORK FROM DAMAGE.

**END OF SECTION**

**SECTION 06 16 00**

**SHEATHING**

PART 1 GENERAL

1.1 SUMMARY

A. PROVIDE SHEATHING.

1.2 QUALITY ASSURANCE

A. COMPLY WITH GOVERNING CODES AND REGULATIONS. PROVIDE PRODUCTS OF ACCEPTABLE MANUFACTURERS WHICH HAVE BEEN IN SATISFACTORY USE IN SIMILAR SERVICE FOR THREE YEARS. USE EXPERIENCED INSTALLERS. DELIVER, HANDLE, AND STORE MATERIALS IN ACCORDANCE WITH MANUFACTURER'S INSTRUCTIONS.
B. CONSTRUCTION PANEL STANDARDS: DOC PS 1, U.S. PRODUCT STANDARD FOR CONSTRUCTION AND INDUSTRIAL PLYWOOD; APA PRP-108.
C. PRESERVATIVE TREATMENT: AWPA C9 FOR PLYWOOD; WATERBORNE PRESSURE TREATMENT. PROVIDE FOR WOOD IN CONTACT WITH SOIL, CONCRETE, MASONRY, ROOFING, FLASHING, DAMPPROOFING AND WATERPROOFING.
D. FIRE-RETARDANT TREATMENT: AWPA C27 FOR PLYWOOD; NONCORROSIVE TYPE. PROVIDE AT BUILDING INTERIOR WHERE REQUIRED BY CODE.

PART 2 PRODUCTS

2.1 MATERIALS

A. GLASS-MAT GYPSUM SHEATHING BOARD: ASTM C 1177.
   1. AVAILABLE PRODUCTS:
      a. CERTAINTEED CORP.; GLASROC.
      b. GEORGIA-PACIFIC GYPSUM LLC; DENS-GLASS GOLD.
      c. NATIONAL GYPSUM COMPANY; GOLD BOND, E2XP.
      d. USG CORPORATION; SECUROCK.
   2. TYPE AND THICKNESS: 5/8 INCH, TYPE X.
B. PLYWOOD SHEATHING: DOC PS 1, APA RATED, EXTERIOR GRADE, C-D PLUGGED, FIRE-RETARDANT TREATED.
   1. THICKNESS: 5/8 IN MIN.
   2. SPAN RATING: REFER TO STRUCTURAL.
   3. SUSTAINABLE DESIGN: LOW-EMITTING MATERIALS, NO ADDED UREA-FORMALDEHYDE.
   4. SUSTAINABLE DESIGN: FSC CERTIFIED.
C. AUXILIARY MATERIALS:
   1. FASTENERS: NON-CORROSIVE, SUITABLE FOR LOAD AND EXPOSURE.

PART 3 EXECUTION

3.1 INSTALLATION

A. INSTALL MATERIALS AND SYSTEMS IN ACCORDANCE WITH MANUFACTURER'S INSTRUCTIONS. INSTALL MATERIALS AND SYSTEMS IN PROPER RELATION WITH ADJACENT CONSTRUCTION. COORDINATE WITH OTHER WORK.
   1. PLYWOOD: COMPLY WITH APPLICABLE RECOMMENDATIONS CONTAINED IN APA FORM NO. E30K, "APA DESIGN/CONSTRUCTION GUIDE: RESIDENTIAL & COMMERCIAL."
   2. GYPSUM: COMPLY WITH APPLICABLE RECOMMENDATIONS CONTAINED IN GA-253.
   3. FASTENER PATTERNS, PER STRUCTURAL DRAWINGS.
   4. SEAL OR TAPE JOINTS, AS RECOMMENDED BY MANUFACTURER.
B. ERECTION TOLERANCES: LEVEL, PLUMB, AND TRUE TO LINE TO A MAXIMUM ALLOWABLE TOLERANCE VARIATION OF 1/8 INCH IN 10 FEET.
C. RESTORE DAMAGED COMPONENTS. PROTECT WORK FROM DAMAGE.

**END OF SECTION**

**SECTION 06 40 23**

**INTERIOR ARCHITECTURAL WOODWORK**

PART 1 GENERAL

1.1 SUMMARY

A. PROVIDE INTERIOR FINISH CARPENTRY, INCLUDING REMODELING EXISTING WOODWORK.

1.2 SUBMITTALS

A. APRODUCT DATA: SUBMIT MANUFACTURER'S PRODUCT DATA AND INSTALLATION INSTRUCTIONS FOR EACH MATERIAL AND PRODUCT USED.
B. SHOP DRAWINGS: SUBMIT SHOP DRAWINGS INDICATING MATERIAL CHARACTERISTICS, DETAILS OF CONSTRUCTION, CONNECTIONS, AND
C. RELATIONSHIP WITH ADJACENT CONSTRUCTION.
D. SAMPLES: SUBMIT TWO REPRESENTATIVE SAMPLES OF EACH MATERIAL SPECIFIED INDICATING VISUAL CHARACTERISTICS AND FINISH. INCLUDE RANGE SAMPLES IF VARIATION OF FINISH IS ANTICIPATED.

1.3 QUALITY ASSURANCE

A. COMPLY WITH GOVERNING CODES AND REGULATIONS. PROVIDE PRODUCTS OF ACCEPTABLE MANUFACTURERS WHICH HAVE BEEN IN SATISFACTORY USE IN SIMILAR SERVICE FOR THREE YEARS. USE EXPERIENCED INSTALLERS. DELIVER, HANDLE, AND STORE MATERIALS IN ACCORDANCE WITH MANUFACTURER'S INSTRUCTIONS.
B. QUALITY STANDARDS: ARCHITECTURAL WOODWORK STANDARDS (FORMERLY AWI), EDITION 1, 2009.
C. PRESERVATIVE TREATMENT: NONPRESSURE METHOD, EXTERIOR TYPE, AWPA N1.
D. FIRE-RETARDANT TREATMENT:
   1. LUMBER: AWPA C20, NON-CORROSIVE TYPE.
   2. PLYWOOD: AWPA C27, NON-CORROSIVE TYPE.
E. WOOD PRODUCTS: COMPLY WITH THE FOLLOWING:
   1. MEDIUM DENSITY OVERLAY (MDO) PLYWOOD: DOC PS 1.
   2. HARDWOOD PLYWOOD AND FACE VENEERS: HPVA HP-1.
F. SUSTAINABLE DESIGN:
   1. SALVAGED AND RECLAIMED WOOD.
   2. RECYCLED CONTENT WOOD FIBER.
   3. FSC CERTIFIED LUMBER.
   4. LOW-EMITTING MATERIALS, ADHESIVES.
   5. LOW-EMITTING MATERIALS, FIELD-APPLIED PAINTS AND COATINGS.
   6. LOW-EMITTING MATERIALS, NO ADDED UREA-FORMALDEHYDE.

PART 2 PRODUCTS

2.1 MATERIALS

A. INTERIOR STANDING AND RUNNING TRIM AND RAILS, INCLUDING FRAMES, JAMBS, AND CAPS:
   1. SPECIES FOR TRANSPARENT FINISH: SALVAGED AND RECLAIMED WOOD, REFER TO DRAWINGS.
   2. SPECIES FOR OPAQUE FINISH: ANY CLOSED-GRAIN HARDWOOD.
   3. GRADE: PREMIUM.
   4. SITE FINISH: TRANSPARENT FINISH, WITH STAIN.
   5. SITE FINISH: SHOP PRIMED, FOR PAINTED FINISH.
B. INTERIOR PLASTIC LAMINATE CLAD CASEWORK:
   1. MANUFACTURERS: MANUFACTURERS: WILSONART INTERNATIONAL DIV. OF PREMARK INTERNATIONAL, INC.; NEVAMAR COMPANY, LLC, DECORATIVE PRODUCTS DIV.; FORMICA CORPORATION, OR APPROVED EQUAL.
   2. LAMINATE: HIGH-PRESSURE DECORATIVE LAMINATE, NEMA LD-3.
   3. GRADE: CUSTOM.
   4. FACE STYLE: REFER TO DRAWINGS.
   5. FRAME FABRICATION: REFER TO DRAWINGS.
C. INTERIOR CASEWORK HARDWARE AND AUXILIARY MATERIALS:
   1. MANUFACTURERS: ACCURIDE INTERNATIONAL, INC.; BLUM, INC.; GRASS AMERICA, INC.; HAFELE AMERICA CO.; KNAPE & VOGT MFG. CO.; OR APPROVED EQUAL.
   2. HARDWARE STANDARD: ANSI/BHMA A156.9.
   3. HARDWARE FINISH AND BASE METAL: SATIN STAINLESS STEEL.
D. INTERIOR WOOD COUNTERTOPS:
   1. COUNTERTOP: SALVAGED AND RECLAIMED WOOD, MATCH ARCHITECT'S SAMPLE.
   2. GRADE: PREMIUM.
   3. VENEER MATCHING OF LEAVES: RANDOM.
   4. VENEER MATCHING IN PANEL FACE: RUNNING.
   5. SITE FINISH: TRANSPARENT FINISH.
E. INTERIOR PLASTIC LAMINATE CLAD COUNTERTOPS:
   1. MANUFACTURERS: MANUFACTURERS: WILSONART INTERNATIONAL DIV. OF PREMARK INTERNATIONAL, INC.; NEVAMAR COMPANY, LLC, DECORATIVE PRODUCTS DIV.; FORMICA CORPORATION, OR APPROVED EQUAL.
   2. LAMINATE: HIGH PRESSURE DECORATIVE LAMINATE, NEMA LD-3.
   3. GRADE: CUSTOM.
   4. CORE: PLYWOOD.
   5. EDGE: LAMINATE.
F. INTERIOR WOOD PANELING AND WAINSCOTS (WD-2):
   1. SPECIES FOR TRANSPARENT FINISH: RECLAIMED WOOD, PER FINISH SCHEDULE.
   2. GRADE: PREMIUM.
   3. FACTORY FINISH: TRANSPARENT FINISH.
G. INTERIOR SHELVING AND CLOSET SPECIALTIES:
   1. SHELVING: PLYWOOD WITH HARDWOOD EDGEBAND.
   2. CLOSET RODS: CHROME PLATED STEEL.
H. INTERIOR AUXILIARY MATERIALS:
   1. SCREWS: FS FF-S-111.
   2. NAILS: FS FF-N-105.
   3. ANCHORS: TYPE REQUIRED FOR SECURE ANCHORAGE.
   4. ADHESIVES: LOW VOC TYPES.

PART 3 EXECUTION

3.1 INSTALLATION

A. PROVIDE WORK TO SIZES, SHAPES, AND PROFILES INDICATED. INSTALL WORK TO COMPLY WITH QUALITY STANDARDS REFERENCED. BACK PRIME WORK AND INSTALL PLUMB, LEVEL AND STRAIGHT WITH TIGHT JOINTS; SCRIBE WORK TO FIT.
B. QUALITY STANDARD: INSTALL WOODWORK TO COMPLY WITH ARCHITECTURAL WOODWORK STANDARDS (AWS), FORMERLY AWI SECTION 1700, FOR THE SAME GRADE SPECIFIED FOR TYPE OF WOODWORK INVOLVED.
C. INSTALL MATERIALS AND SYSTEMS IN ACCORDANCE WITH MANUFACTURER'S INSTRUCTIONS AND APPROVED SUBMITTALS. INSTALL MATERIALS AND SYSTEMS IN PROPER RELATION WITH ADJACENT CONSTRUCTION. USE NON-CORROSIVE FASTENERS FOR EXTERIOR WORK. COORDINATE WITH WORK OF OTHER SECTIONS.
D. COMPLY WITH MANUFACTURER'S REQUIREMENTS FOR CUTTING, HANDLING, FASTENING AND WORKING TREATED MATERIALS.
E. REPAIR MINOR DAMAGE, CLEAN AND PROTECT.

**END OF SECTION**

**SECTION 06 64 00**

**PLASTIC PANELING**

PART 1 GENERAL

1.1 SUMMARY

A. PROVIDE PLASTIC WALL PANELING.

1.2 QUALITY ASSURANCE

A. COMPLY WITH GOVERNING CODES AND REGULATIONS. PROVIDE PRODUCTS OF ACCEPTABLE MANUFACTURERS WHICH HAVE BEEN IN SATISFACTORY USE IN SIMILAR SERVICE FOR THREE YEARS. USE EXPERIENCED INSTALLERS. DELIVER, HANDLE, AND STORE MATERIALS IN ACCORDANCE WITH MANUFACTURER'S INSTRUCTIONS.

PART 2 PRODUCTS

2.1 MATERIALS

A. GLASS-FIBER REINFORCED PLASTIC (**FRP**) PANELING:
   1. BASIS OF DESIGN: REFER TO FINISH SCHEDULE
   2. THICKNESS: 0.075 INCH.
   3. COLOR AND TEXTURE: REFER TO FINISH SCHEDULE.
   4. FIRE RATING: ASTM E 84, CLASS C.
   5. ACCESSORIES: LOW VOC ADHESIVES AND SEALANTS.

PART 3 EXECUTION

3.1 INSTALLATION

A. AINSTALL MATERIALS AND SYSTEMS IN ACCORDANCE WITH MANUFACTURER'S INSTRUCTIONS. INSTALL MATERIALS AND SYSTEMS IN PROPER RELATION WITH ADJACENT CONSTRUCTION.
   1. SEAL JOINTS.
B. REPAIR MINOR DAMAGE, CLEAN AND PROTECT.

**END OF SECTION**

**SECTION 07 13 00**

**SELF-ADHERING SHEET WATERPROOFING**

PART 1 GENERAL

1.1 SUMMARY

A. PROVIDE SHEET MEMBRANE WATERPROOFING.

1.2 SUBMITTALS

A. PRODUCT DATA: SUBMIT MANUFACTURER'S PRODUCT DATA AND INSTALLATION INSTRUCTIONS FOR EACH MATERIAL AND PRODUCT USED.
B. WARRANTY: SUBMIT MANUFACTURER'S STANDARD WARRANTY. INCLUDE LABOR AND MATERIALS TO REPAIR OR REPLACE DEFECTIVE MATERIALS.
   1. WARRANTY PERIOD: 5 YEARS.

1.3 QUALITY ASSURANCE

A. COMPLY WITH GOVERNING CODES AND REGULATIONS. PROVIDE PRODUCTS OF ACCEPTABLE MANUFACTURERS WHICH HAVE BEEN IN SATISFACTORY USE IN SIMILAR SERVICE FOR THREE YEARS. USE EXPERIENCED INSTALLERS. DELIVER, HANDLE, AND STORE MATERIALS IN ACCORDANCE WITH MANUFACTURER'S INSTRUCTIONS.
B. TESTING: FLOOD TESTING OF HORIZONTAL APPLICATIONS.

PART 2 PRODUCTS

2.1 MATERIALS

A. FOUNDATION WALL WATERPROOFING
   1. MANUFACTURERS: CARLISLE CORPORATION; W.R. GRACE; W.R. MEADOWS; T.C. MIRADRI; MONSEY BAKOR; PECORA; OR APPROVED EQUAL
   2. TYPE: SELF-ADHERING RUBBERIZED ASPHALT AND POLYETHELENE SHEET MEMBRANE, 60 MILS THICK, AND TENSILE STRENGTH 250 PSI
   3. TYPE: BUTYL SHEET, ASTM D 6134, TYPE II, 60-MIL THICK FLEXIBLE SHEET, UNREINFORCED
   4. TYPE: EPDM RUBBER SHEET: ASTM D 6134, TYPE I, 60-MIL THICK FLEXIBLE SHEET, UNREINFORCED.
   5. ACCESSORIES: PRIMERS, SURFACE CONDITIONERS, TERMINATION BARS, AND PROTECTION BOARD
B. GEOTEXTILE-FACED DRAINAGE PANELS:
   1. MANUFACTURERS: AMERICAN WICK DRAIN CORPORATION; COSELLA-DORKEN; ELJEN CORP.; GREENSTREAK, INC.; JDR ENTERPRISES, INC.; LINQ INDUSTRIAL FABRICS, INC.; MIDWEST DIVERSIFIED TECHNOLOGIES INCORPORATED; TC MIRAFI; OR APPROVED EQUAL.
   2. TYPE: GEOTECTILE FACED 3-DIMENSIONAL, NONBIODEGRADABLE, MOLDED-PLASTIC-SHEET DRAINAGE CORES.
C. INSULATING DRAINAGE PANELS:
   1. MANUFACTURERS: DOW CHEMICAL COMPANY (THE); OWENS CORNING; T. CLEAR CORPORATION; OR APPROVED EQUAL.
   2. TYPE: EXTRUDED-POLYSTYRENE BOARD ASTM C 578; TYPE IV, 1.6-LB/CU. FT. 25-PSI COMPRESSIVE STRENGTH; SHIPLAP OR TONGUE-AND GROOVE EDGES AND WITH DRAINAGE CHANNELS ONE SIDE, FACED WITH GEOTEXTILE FABRIC.

PART 3 EXECUTION

3.1 INSTALLATION

A. INSTALL MATERIALS AND SYSTEMS IN ACCORDANCE WITH MANUFACTURER'S INSTRUCTIONS AND APPROVED SUBMITTALS. INSTALL MATERIALS AND SYSTEMS IN PROPER RELATION WITH ADJACENT CONSTRUCTION. COORDINATE WITH OTHER WORK.
B. RESTORE DAMAGED COMPONENTS AND TEST WATERPROOFING FOR LEAKS. CLEAN AND PROTECT WORK FROM DAMAGE.

**END OF SECTION**

**SECTION 07 21 00**

**THERMAL INSULATION**

PART 1 GENERAL

1.1 SUMMARY

A. PROVIDE THERMAL INSULATION AND VAPOR RETARDERS.

1.2 SUBMITTALS

A. PRODUCT DATA: SUBMIT MANUFACTURER'S PRODUCT DATA AND INSTALLATION INSTRUCTIONS FOR EACH MATERIAL AND PRODUCT USED.
B. QUALIFICATION DATA: FOR INSTALLER OF SPRAY-APPLIED PRODUCTS AND TESTING AGENCY.
C. TEST DATA: SUBMIT DIGITAL REPORT OF INFRARED CAMERA SURVEY WITH IMAGES OF TEST RESULTS WITH RECOMMENDATIONS FOR REPAIRS.

1.3 QUALITY ASSURANCE

A. COMPLY WITH GOVERNING CODES AND REGULATIONS. PROVIDE PRODUCTS OF ACCEPTABLE MANUFACTURERS WHICH HAVE BEEN IN SATISFACTORY USE IN SIMILAR SERVICE FOR THREE YEARS. USE EXPERIENCED INSTALLERS. DELIVER, HANDLE, AND STORE MATERIALS IN ACCORDANCE WITH MANUFACTURER'S INSTRUCTIONS.
   1. INSTALLER QUALIFICATIONS: A QUALIFIED INSTALLER WHO HAS BEEN TRAINED BY AND IS ACCEPTABLE TO SPRAY POLYURETHANE FOAM INSULATION MANUFACTURER TO INSTALL MANUFACTURER'S PRODUCTS.
   2. TESTING AGENCY QUALIFICATIONS: AN INDEPENDENT AGENCY QUALIFIED AS A "CERTIFIED INFRARED THERMOGRAPHER" PER ASNT SNT-TC-1A GUIDELINES, LEVEL I CERTIFICATION MINIMUM.

PART 2 PRODUCTS

2.1 MATERIALS

A. BOARD INSULATION:
   1. APPLICATION: FOUNDATION WALLS.
   2. APPLICATION: UNDER SLABS-ON-GRADE.
   3. APPLICATION: EXTERIOR CAVITY WALLS, OUTBOARD OF SHEATHING.
   4. TYPE: EXTRUDED POLYSTYRENE, RIGID.
      a. MANUFACTURERS: DOW CHEMICAL; OWENS CORNING; OR APPROVED EQUAL.
      b. STANDARD: ASTM C 578.
         1). DENSITY: 25 PSI.
         2). R-VALUE (THERMAL RESISTIVITY): 5.0 DEG F X H X SQ. FT./BTU X IN. AT 75 DEG F, MIN.
   5. TYPE: UNFACED, SLAG-WOOL-/ROCK-WOOL-FIBER.
      a. MANUFACTURERS: OWENS CORNING THERMAFIBER; ROXUL; OR APPROVED EQUAL.
      b. STANDARD: ASTM C 612, SEMI-RIGID OR RIGID, ASTM C 612, FORMALDEHYDE-FREE TYPE.
         1). DENSITY: 4.0 LB/CU. FT. MIN.
         2). R-VALUE (THERMAL RESISTIVITY): 4.0 DEG F X H X SQ. FT./BTU X IN. AT 75 DEG F, MIN.
      c. ACCESSORIES: MECHANICAL ANCHORS.
B. BLANKET/BATT INSULATION:
   1. MANUFACTURERS: JOHNS MANVILLE BUILDING INSULATIONS; KNAUF INSULATION; OWENS CORNING THERMAFIBER, INC.; ROXUL; OR APPROVED EQUAL.
   2. APPLICATION: THERMAL INSULATION IN STUDS IN EXTERIOR WALLS.
   3. APPLICATION: THERMAL INSULATION AT UNDERSIDE OF ROOFS, OVER HEATED SPACES AND SOFFITS.
   4. APPLICATION: THERMAL INSULATION OVER UNHEATED AREAS.
   5. TYPE: UNFACED MINERAL FIBER.
      a. STANDARD: ASTM C 665, TYPE I (UNFACED), FORMALDEHYDE-FREE TYPE.
         1). R-VALUE (THERMAL RESISTIVITY): 4.0 DEG F X H X SQ. FT./BTU X IN. AT 75 DEG F, MIN.
C. SPRAY-APPLIED CELLULOSE INSULATION:
   1. BASIS OF DESIGN: APPLEGATE INSULATION; GREENFIBER; NATIONAL FIBER; NU-WOOL; OR APPROVED EQUAL.
   2. APPLICATION: EXTERIOR ENVELOPE, WALL ASSEMBLIES.
   3. STANDARD: ASTM C 739, FOR DRY DENSE PACK INSTALLATION, FORMALDEHYDE-FREE TYPE.
      a. DENSITY: 3.5 LB/CU. FT. MIN.
      b. R-VALUE (THERMAL RESISTIVITY): 3.6 DEG F X H X SQ. FT./BTU X IN. AT 75 DEG F, MIN.
   4. ACCESSORIES: NON-WOVEN, VAPOR-PERMEABLE NETTING, METAL STAPLES, AND TAPE, AS RECOMMENDED BY MANUFACTURER FOR A COMPLETE ASSEMBLY.
D. SPRAY-APPLIED POLYURETHANE INSULATION:
   1. BASIS OF DESIGN: ICP ADHESIVES AND SEALANTS (FORMERLY FOMO PRODUCTS): HANDI-FOAM PRODUCTS.
   2. APPLICATION: EXTERIOR ENVELOPE, GAPS AND VOIDS.
   3. STANDARD: ASTM C 1029.
   4. VOC EMISSIONS: GREENGUARD GOLD CERTIFICATION.
E. VAPOR RETARDER:
   1. APPLICATION: EXTERIOR WALLS.
   2. TYPE: REINFORCED 2-PLY POLYETHYLENE, 6 TO 10 MILS.
      a. ACCESSORIES: SEAM TAPES.

PART 3 EXECUTION

3.1 INSTALLATION

A. INSTALL MATERIALS AND SYSTEMS IN ACCORDANCE WITH MANUFACTURER'S INSTRUCTIONS AND APPROVED SUBMITTALS. INSTALL MATERIALS AND SYSTEMS IN PROPER RELATION WITH ADJACENT CONSTRUCTION. COORDINATE WITH WORK OF OTHER SECTIONS. PROVIDE FULL THICKNESS IN ONE LAYER OVER ENTIRE AREA, TIGHTLY FITTING AROUND PENETRATIONS.
   1. BELOW-GRADE RIGID INSULATION: IF NOT OTHERWISE INDICATED, EXTEND INSULATION A MINIMUM OF 48 INCHES BELOW EXTERIOR GRADE LINE.
   2. SPRAY-APPLIED CELLULOSE INSULATION: INSTALL VAPOR-PERMEABLE NETTING, STAPLED TO FACE OF WOOD STUDS, PRIOR TO SPRAY APPLICATION.
B. INSTALL VAPOR RETARDER OVER ENTIRE AREA OF INSIDE FACE OF EXTERIOR WALLS AND ELSEWHERE AS INDICATED. SEAL ALL SEAMS AND AROUND PERIMETER AND PENETRATIONS WITH DUCT TAPE TO FORM A CONTINUOUS VAPOR RETARDER FREE OF HOLES.
C. PROTECT INSTALLED INSULATION AND VAPOR RETARDER.

3.2 FIELD QUALITY CONTROL

A. TESTING AGENCY: ENGAGE A QUALIFIED INDEPENDENT TESTING AND INSPECTING AGENCY TO PERFORM FIELD TESTS AND INSPECTIONS INDICATED BELOW AND PREPARE TEST REPORTS. RETESTING OF MATERIALS FAILING TO COMPLY WITH SPECIFIED REQUIREMENTS SHALL BE DONE AT CONTRACTOR'S EXPENSE.
1. BLOWER DOOR TEST: OWNER SHALL PERFORM A WHOLE BUILDING BLOWER DOOR TEST, PER ASTM E 779, AFTER BUILDING ENVELOPE IS INSTALLED AND PROPERLY SEALED.
B. INFRARED CAMERA SURVEY: PERFORM AN INFRARED CAMERA SCAN OF WALLS, FLOORS, AND CEILINGS/ROOFS TO DETERMINE WHERE INSULATION AND AIR BARRIER ARE NOT CONTINUOUS, AFTER INSULATION HAS BEEN INSTALLED, BUT PRIOR TO GYPSUM BOARD INSTALLATION.

**END OF SECTION**

**SECTION 07 25 00**

**WEATHER BARRIERS**

PART 1 GENERAL

1.1 SUMMARY

A. PROVIDE AIR AND MOISTURE BARRIERS.

1.2 SUBMITTALS

A. PRODUCT DATA: SUBMIT MANUFACTURER'S PRODUCT DATA AND INSTALLATION INSTRUCTIONS FOR EACH MATERIAL AND PRODUCT USED.
B. SHOP DRAWINGS: SUBMIT SHOP DRAWINGS INDICATING MATERIAL CHARACTERISTICS, DETAILS OF CONSTRUCTION AT FOUNDATION, WALLS, ROOF, CONNECTIONS, AND RELATIONSHIP WITH ADJACENT CONSTRUCTION.

1.3 QUALITY ASSURANCE

A. COMPLY WITH GOVERNING CODES AND REGULATIONS. PROVIDE PRODUCTS OF ACCEPTABLE MANUFACTURERS WHICH HAVE BEEN IN SATISFACTORY USE IN SIMILAR SERVICE FOR THREE YEARS. USE EXPERIENCED INSTALLERS. DELIVER, HANDLE, AND STORE MATERIALS IN ACCORDANCE WITH MANUFACTURER'S INSTRUCTIONS.

PART 2 PRODUCTS

2.1 MATERIALS

A. AIR AND MOISTURE BARRIERS:
   1. MANUFACTURERS: CARLISLE CCW; GCP APPLIED TECHNOLOGIES (FORMERLY W.R. GRACE); HENRY CO.; OR APPROVED EQUAL.
   2. TYPE: FLUID-APPLIED, VAPOR PERMEABLE TYPE, 60 MILS DRY FILM THICKNESS.
   3. TRANSITION MATERIALS: SILICONE SHEET.

PART 3 EXECUTION

3.1 INSTALLATION

A. INSTALL MATERIALS AND SYSTEMS IN ACCORDANCE WITH MANUFACTURER'S INSTRUCTIONS AND APPROVED SUBMITTALS. INSTALL MATERIALS AND SYSTEMS IN PROPER RELATION WITH ADJACENT CONSTRUCTION. COORDINATE WITH WORK OF OTHER SECTIONS. INSTALL OVER ENTIRE AREA, TIGHTLY FITTING AROUND PENETRATIONS AND AT PERIMETERS.
B. PROTECT INSTALLED AIR AND MOISTURE BARRIERS.

END OF SECTION

**SECTION 07 42 00**

**METAL WALL PANELS**

PART 1 GENERAL

1.1 SUMMARY

A. PROVIDE MANUFACTURED WALL PANELS AND ASSOCIATED ACCESSORIES.

1.2 SUBMITTALS

A. PRODUCT DATA: SUBMIT MANUFACTURER'S PRODUCT DATA AND INSTALLATION INSTRUCTIONS FOR EACH MATERIAL AND PRODUCT USED.
B. SHOP DRAWINGS: SUBMIT SHOP DRAWINGS INDICATING MATERIAL CHARACTERISTICS, DETAILS OF CONSTRUCTION, CONNECTIONS, AND RELATIONSHIP WITH ADJACENT CONSTRUCTION.
C. WARRANTY: SUBMIT MANUFACTURE'S STANDARD WARRANTY. INCLUDE LABOR AND MATERIALS TO REPAIR OR REPLACE DEFECTIVE MATERIALS.
   1. WARRANTY PERIOD: TWO YEARS FOR PANEL, 10 YEARS FOR FINISH.

1.3 QUALITY ASSURANCE

A. COMPLY WITH GOVERNING CODES AND REGULATIONS. PROVIDE PRODUCTS OF ACCEPTABLE MANUFACTURERS WHICH HAVE BEEN IN SATISFACTORY USE IN SIMILAR SERVICE FOR FIVE YEARS.
B. INSTALLER QUALIFICATIONS: INSTALLER SHALL BE AUTHORIZED BY THE MANUFACTURER AND THE WORK SHALL BE SUPERVISED BY A PERSON HAVING SUCCESSFULLY COMPLETED A MANUFACTURER TRAINING SEMINAR REGARDING PROPER INSTALLATION OF THE SPECIFIED PRODUCT.
C. DELIVER, HANDLE, AND STORE MATERIALS IN ACCORDANCE WITH MANUFACTURER'S INSTRUCTIONS.

1.4 TESTING

A. PERFORM SITE SPECIFIC ENGINEERING TO INDICATE COMPLIANCE WITH LOCAL BUILDING CODES.

PART 2 PRODUCTS

2.1 MATERIALS

A. METAL WALL PANELS (**M-1-E**):
   1. BASIS OF DESIGN: ATAS INTERNATIONAL; METAFOR (SEE FINISH SCHEDULE).
   2. TYPE: FIELD-ASSEMBLED WALL PANELS WITH CONCEALED FASTENERS.
   3. SHEET MATERIALS: ALUMINUM SHEET.
      a. STANDARD: ASTM B 209, ALCLAD ALLOY 3003, 0.040 INCH.
   4. PANEL FINISH: FLUOROPOLYMER, 3-COAT.
      a. COLOR: REFER TO FINISH SCHEDULE.
   5. PANEL SUPPORTS AND ANCHORAGE:
      a. WALL GIRTS: C OR Z SHAPED SECTIONS, 16 GAUGE (.0598 INCH) STEEL, SHOP PAINTED.
      b. FLANGE AND SAG BRACING: 16 GAUGE (.0598 INCH) STEEL, SHOP-PAINTED.
      c. BASE AND SILL ANGLES: 14 GAUGE (.0747 INCH) GALVANIZED STEEL.
B. METAL WALL PANELS (**MP-1**)
   1. BASIS OF DESIGN: ATAS INTERNATIONAL; OPALINE (SEE FINISH SCHEDULE).
   2. TYPE: FIELD-ASSEMBLED WALL PANELS WITH CONCEALED FASTENERS.
   3. SHEET MATERIALS: ALUMINUM SHEET
      a. STANDARD: ASTM B 209, ALCLAD ALLOY 3003, 0.040.INCH.
   4. PANEL FINISH: FLUOUROPOLYMER, 3-COAT.
      a. COLOR: REFER TO FINISH SCHEDULE.
   5. PANEL SUPPORTS AND ANCHORAGE:
      a. WALL GIRTS: C OR Z SHAPED SECTIONS, 16 GAUGE (.0598 INCH) STEEL, SHOP PAINTED.
      b. FLANGE AND SAG BRACING: 16 GAUGE (.0598 INCH) STEEL, SHOP-PAINTED.
      c. BASE AND SILL ANGLED: 14 GAUGE (.0747 INCH) GALVANIZED STEEL.

PART 3 EXECUTION

3.1 INSTALLATION

A. PROVIDE FIELD MEASUREMENTS TO MANUFACTURER AS REQUIRED TO ACHIEVE PROPER FIT OF THE METAL WALL PANELS TO BUILDING ENVELOPE. MEASUREMENTS SHALL BE PROVIDED IN A TIMELY MANNER SO THAT THERE IS NO IMPACT TO CONSTRUCTION OR MANUFACTURING SCHEDULE.
B. INSTALL MATERIALS AND SYSTEMS IN ACCORDANCE WITH MANUFACTURER'S INSTRUCTIONS AND APPROVED SUBMITTALS. INSTALL MATERIALS AND SYSTEMS IN PROPER RELATION WITH ADJACENT CONSTRUCTION AND WITH UNIFORM APPEARANCE. COORDINATE WITH WORK OF OTHER SECTIONS.
C. EXAMINE INDIVIDUAL PANELS UPON REMOVING FROM THE BUNDLE: NOTIFY MANUFACTURER OF PANEL DEFECTS - DO NOT INSTALL DEFECTIVE PANELS
D. RESTORE DAMAGED COMPONENTS AND FINISHES. CLEAN AND PROTECT WORK FROM DAMAGE.
E. INSTALL PANELS PLUMB LEVEL AND TRUE-TO-LINE DIMENSIONS AND LAYOUT INDICATED ON APPROVED SHOP DRAWINGS.
F. CUTTING AND FITTING OF PANELS SHALL BE NEAT, SQUARE AND TRUE. TORCH CUTTING IS PROHIBITED.
G. APPLY SEALANT TAPE AT TRIM PER MANUFACTURER'S DETAILS AND APPROVED SHOP DRAWINGS FOR WEATHERTIGHT INSTALLATION
H. SEALANT INSTALLATION FOR EXPOSED JOINTS (IN EXTERIOR APPLICATION)
   1. CLEAN AND PRIME SURFACES TO REVIEW EXTERIOR EXPOSED SEALANTS IN ACCORDANCE WITH SEALANT MANUFACTURER'S RECOMMENDATIONS
   2. FOLLOW SEALANT MANUFACTURER'S RECOMMENDATIONS FOR JOINT WIDTH-TO-DEPTH RATIO. APPLICATION TEMPERATURE RANGE, SIZE AND TYPE OF BACKER ROD, AND COMPATIBILITY OF MATERIALS FOR ADHESION.

**END OF SECTION**

**SECTION 07 54 19**

**POLYVINYL-CHLORIDE ROOFING**

PART 1 GENERAL

1.1 SUMMARY

A. PROVIDE POLYVINYL-CHLORIDE ROOFING

1.2 SUBMITTALS

A. PRODUCT DATA: SUBMIT MANUFACTURER'S PRODUCT DATA AND INSTALLATION INSTRUCTIONS FOR EACH MATERIAL AND PRODUCT USED.
B. SAMPLES: SUBMIT TWO REPRESENTATIVE SAMPLES OF EACH MATERIAL SPECIFIED INDICATING VISUAL CHARACTERISTICS AND FINISH. INCLUDE RANGE SAMPLES IF VARIATION OF FINISH IS ANTICIPATED.
C. WARRANTY: SUBMIT MANUFACTURER'S STANDARD WARRANTY. INCLUDE LABOR AND MATERIALS TO REPAIR OR REPLACE DEFECTIVE MATERIALS
   1. WARRANTY PERIOD: 20 YEARS.

1.3 QUALITY ASSURANCE

A. COMPLY WITH GOVERNING CODES AND REGULATIONS. PROVIDE PRODUCTS OF ACCEPTABLE MANUFACTURERS WHICH HAVE BEEN IN SATISFACTORY USE IN SIMILAR SERVICE FOR THREE YEARS. USE EXPERIENCED INSTALLERS. DELIVER, HANDLE, AND STORE MATERIALS IN ACCORDANCE WITH MANUFACTURER'S INSTRUCTIONS.

PART 2 PRODUCTS

2.1 MATERIALS

A. POLYVINYL-CHLORIDE MEMBRANE ROOFING:
   1. MANUFACTURER: DURO-LAST PVC THERMOPLASTIC MEMBRANE; CONFORMING TO ASTM D 4434, TYPE III, FABRIC-REINFORCED, PVC, NSF/ANSI 347 GOLD OR PLATINUM CERTIFICATION, AND A PRODUCT-SPECIFIC THIRD-PARTY VERIFIED ENVIRONMENTAL PRODUCT DECLARATION. MEMBRANE PROPERTIES AS FOLLOWS:
      a. THICKNESS: 50 MIL
      b. EXPOSED FACE COLOR: WHITE
      c. MINIMUM RECYCLE CONTENT 7% POST-INDUSTRIAL AND 0% POST-CONSUMER
      d. RECYCLED AT END OF LIFE INTO RESILIENT FLOORING OR CONCRETE EXPANSION JOINTS
B. ACCESORY MATERIALS:
   1. SHEET FLASHING: MANUFACTURER'S STANDARD REIFORCED PVC SHEET FLASHING
   2. DURO-LAST FACTORY PREFABRICATED FLASHINGS; MANUFACTURED USING MANUFACTURER'S STANDARD REINFORCED PVC MEMBRANE INCLUDING STACK FLASHINGS, CURB FLASHINGS, INSIDE AND OUTSIDE CORNERS, MEMBRANE SCUPPER LINERS
   3. SEALANTS AND ADHESIVES: COMPATIBLE WITH ROOFING SYSTEM AND SUPPLIED BY DURO-LAST ROOFING, INC.
   4. SLIP SHEET: COMPATIBLE WITH ROOFING SYSTEM AND SUPPLIED BY DURO-LAST ROOFING, INC.
   5. FASTENERS AND PLATES: FACTORY COATED STEEL FASTENERS AND METAL OR PLASTIC PLATES MEETING CORROSION-RESISTANCE PROVISIONS IN FMG 5570, DESIGNED FOR FASTENING MEMBRANE AND INSULATION TO SUBSTRATE. SUPPLIED BY DURO-LAST ROOFING, INC.
   6. PV ANCHORS
   7. TERMINATION AND EDGE DETAILS: SUPPLIED BY DURO-LAST ROOFING, INC.
   8. VINYL COATED METAL: SUPPLIED BY DURO-LAST ROOFING, INC. INSTALL A MINIMUM OF 1 VENT FOR EACH 1,000 SF OF ROOF AREA
C. WALKWAYS
   1. PROVIDE NON-SKID, MAINTENANCE-FREE WALKWAY PADS IN AREAS OF HEAVY FOOT TRAFFIC AND AROUND MECHANICAL EQUIPMENT
      A. DURO-LAST ROOF TRAK III WALKWAY PAD

2.3 ROOF INSULATION

A. GENERAL
   1. PROVIDE PREFERRED ROOF INSULATION BOARDS THAT COMPLY WITH REQUIREMENTS AND REFERENCED STANDARDS, AS SELECTED FROM MANUFACTURER'S STANDARD SIZES
   2. PROVIDE PREFORMED SADDLES, CRICKETS, AND OTHER INSULATION SHAPES WHERE INDICATED FOR SLOPING TO DRAIN. FABRICATE TO SLOPES INDICATED
B. POLYISOCYANURATE BOARD INSULATION: COMPLYING WITH ASTMC 1289, TYPE II, FELT OR GLASS-FIBER MAT FACER ON BOTH MAJOR SURFACES. MATERIAL AS SUPPLIED BY DURO-LAST
   1. DURO-GUARD ISO II (FLAT, MECHANICALLY FASTENED)
   2. DURO-GUARD, ISO II (FLAT, LOOSE LAY)

PART 3 EXECUTION

3.1 INSTALLATION

A. INSPECT SUBSRATE AND REPORT UNSATISFACTORY CONDITIONS IN WRITING. .BEGINNING WORK MEANS ACCEPTANCE OF SUBSTRATE.
B. COMPLY WITH ROOF SYSTEM MANUFACTURER'S INSTRUCTIONS AND RECOMMENDATIONS; CLEAN, PRIME, AND PREPARE SUBSTRATE.
C. INSTALL INSULATION WITH TIGHTLY BUTTED JOINTS AND NEATLY FITTED AROUND PENETRATIONS.
D. BOTTOM LAYER OF INSULATION TO BE LOOSE-LAID; TOP LAYER OF INSULATION TO BE MECHANICALLY FASTENED
E. BEGIN ROOF INSTALLATION ONLY IN PRESENCE OF MANUFACTURER'S REPRESENTATIVE. MINIMIZE SEAMS AND SHINGLE OVERLAPS TO SHED WATER.
F. INSTALL WALKWAY PROTECTION OVER AN ADDITIONAL LAYER OF MEMBRANE AT LOCATIONS INDICATED AND WHERE REQUIRED TO PROVIDE ACCESS TO ROOF MOUNTED EQUIPMENT.
G. RESTORE OR REPLACE DAMAGED COMPONENTS. PROTECT WORK FROM DAMAGE.

**END OF SECTION**

**SECTION 07 62 00**

**SHEET METAL FLASHING AND TRIM**

PART 1 GENERAL

1.1 SUMMARY

A. PROVIDE FLASHING AND SHEET METAL.

1.2 SUBMITTALS

A. PRODUCT DATA: SUBMIT MANUFACTURER'S PRODUCT DATA AND INSTALLATION INSTRUCTIONS FOR EACH MATERIAL AND PRODUCT USED.
B. SHOP DRAWINGS: SUBMIT SHOP DRAWINGS INDICATING MATERIAL CHARACTERISTICS, DETAILS OF CONSTRUCTION, CONNECTIONS, AND RELATIONSHIP WITH ADJACENT CONSTRUCTION.
C. SAMPLES: SUBMIT TWO REPRESENTATIVE SAMPLES OF EACH MATERIAL SPECIFIED INDICATING VISUAL CHARACTERISTICS AND FINISH. INCLUDE RANGE SAMPLES IF VARIATION OF FINISH IS ANTICIPATED.

1.3 QUALITY ASSURANCE

A. COMPLY WITH GOVERNING CODES AND REGULATIONS. PROVIDE PRODUCTS OF ACCEPTABLE MANUFACTURERS WHICH HAVE BEEN IN SATISFACTORY USE IN SIMILAR SERVICE FOR THREE YEARS. USE EXPERIENCED INSTALLERS. DELIVER, HANDLE, AND STORE MATERIALS IN ACCORDANCE WITH MANUFACTURER'S INSTRUCTIONS.

PART 2 PRODUCTS

2.1 MATERIALS

A. FLASHING AND SHEET METAL:
   1. APPLICATION: METAL COUNTERFLASHING AND BASE FLASHING.
   2. APPLICATION: EXTERIOR WALL FLASHING AND EXPANSION JOINTS.
   3. APPLICATION: EXPOSED METAL TRIM AND FASCIA UNITS.
   4. APPLICATION: EXPOSED METAL COPINGS.
   5. METAL: STAINLESS STEEL.
      a. STANDARD: AISI TYPE 302/304, ASTM A 666, 28 GAUGE (.0156 INCH).
      b. FINISH: 2D ANNEALED.
   6. METAL: ALUMINUM.
      a. SHEET: ASTM B 209, ALLOY 3003, 20 GAUGE (.0359 INCH).
      b. EXTRUSIONS: ASTM B 221, ALLOY 6063-T52, 0.080 INCHES FOR PRIMARY LEGS OF EXTRUSION.
      c. FINISH: CLEAR ANODIZED.
      d. FINISH: FLUOROPOLYMER, 3-COAT.
B. AUXILIARY MATERIALS:
   1. SOLDER COMPATIBLE WITH METAL.
   2. BITUMINOUS ISOLATION COATING.
   3. MASTIC AND ELASTOMERIC SEALANTS.
   4. EPOXY SEAM SEALER.
   5. ROSIN-SIZED BUILDING PAPER SLIP SHEET.
   6. POLYETHYLENE UNDERLAYMENT.
   7. REGLETS AND METAL ACCESSORIES.

PART 3 EXECUTION

3.1 INSTALLATION

A. FOLLOW RECOMMENDATIONS OF SMACNA SHEET METAL MANUAL. ALLOW FOR EXPANSION. ISOLATE DISSIMILAR MATERIALS.
B. INSTALL MATERIALS AND SYSTEMS IN ACCORDANCE WITH MANUFACTURER'S INSTRUCTIONS AND APPROVED SUBMITTALS. INSTALL MATERIALS AND SYSTEMS IN PROPER RELATION WITH ADJACENT CONSTRUCTION AND WITH UNIFORM APPEARANCE. COORDINATE WITH WORK OF OTHER SECTIONS.
C. RESTORE DAMAGED COMPONENTS AND FINISHES. CLEAN AND PROTECT WORK FROM DAMAGE.

**END OF SECTION**

**SECTION 07 71 00**

**ROOF SPECIALTIES**

PART 1 GENERAL

1.1 SUMMARY

A. PROVIDE MANUFACTURED ROOF SPECIALTIES.

1.2 SUBMITTALS

A. PRODUCT DATA: SUBMIT MANUFACTURER'S PRODUCT DATA AND INSTALLATION INSTRUCTIONS FOR EACH MATERIAL AND PRODUCT USED.
B. SHOP DRAWINGS: SUBMIT SHOP DRAWINGS INDICATING MATERIAL CHARACTERISTICS, DETAILS OF CONSTRUCTION, CONNECTIONS, AND RELATIONSHIP WITH ADJACENT CONSTRUCTION.

1.3 QUALITY ASSURANCE

A. COMPLY WITH GOVERNING CODES AND REGULATIONS. PROVIDE PRODUCTS OF ACCEPTABLE MANUFACTURERS WHICH HAVE BEEN IN SATISFACTORY USE IN SIMILAR SERVICE FOR THREE YEARS. USE EXPERIENCED INSTALLERS. DELIVER, HANDLE, AND STORE MATERIALS IN ACCORDANCE WITH MANUFACTURER'S INSTRUCTIONS.
B. INSURANCE REQUIREMENTS: FM APPROVAL OR ACCEPTANCE.

PART 2 PRODUCTS

2.1 MATERIALS

A. ATTIC ROOF STATIC EXHAUST VENTS, WHERE INDICATED ON ROOF PLAN:
1. BASIS OF DESIGN: VENTAMATIC, LTD.; STV-51 SERIES: SQUARE TOP VENT.
2. MATERIALS: ALUMINUM CONSTRUCTION.
3. NET FREE AREA: GREATER THAN 50%.
4. FACTORY FINISH: TO BE SELECTED BY ARCHITECT FROM MANUFACTURER'S STANDARD LINE.

PART 3 EXECUTION

3.1 INSTALLATION

A. COMPLY WITH ACCESSORY MANUFACTURERS' INSTRUCTIONS AND RECOMMENDATIONS. COORDINATE INSTALLATION WITH ROOFING SYSTEM TO ENSURE WEATHERTIGHT PERFORMANCE. ANCHOR SECURELY TO STRUCTURE TO WITHSTAND INWARD AND OUTWARD LOADS.
B. ISOLATE DISSIMILAR METALS TO PREVENT GALVANIC CORROSION.

**END OF SECTION**

Bergmeyer
BOS - 51 Sleeper St. 6th Floor Boston, MA 02210 617.542.1025
LA - 800 South Figueroa St. Suite 1080 Los Angeles, CA 90017 212.337.1090
www.bergmeyer.com

CONSULTANTS:

SEAL/ SIGNATURE:

| NO. | BY | DATE | DESCRIPTION |
|---|---|---|---|
| | | 2021-01-11 | PERMIT/BID SET |
| | | 2020-12-21 | 75% SET |

SHAKE SHACK

SHAKE SHACK - LEE'S SUMMIT MO

2051 NW LOWENSTEIN DRIVE
LEE'S SUMMIT, MISSOURI 64081
SHACK #1348

PERMIT/BID SET

ARCHITECTURAL SPECIFICATIONS

DRAWN BY: CS & WQL

CHECKED BY: JS

JOB NO: 20068.00

A703

C:\Users\qlevine\Documents\068_Shake Shack-Lee's Summit_Central_qlevine@bergmeyer.com.rvt
1/11/2021 6:08:55 PM

RELEASE FOR CONSTRUCTION
AS NOTED ON PLANS REVIEW
DEVELOPMENT SERVICES
LEE'S SUMMIT, MISSOURI
03/10/2021

**SECTION 07 72 00**

**ROOF ACCESSORIES**

PART 1 GENERAL

1.1 SUMMARY

A. PROVIDE ROOF ACCESSORIES.

1.2 SUBMITTALS

A. PRODUCT DATA: SUBMIT MANUFACTURER'S PRODUCT DATA AND INSTALLATION INSTRUCTIONS FOR EACH MATERIAL AND PRODUCT USED.
B. SHOP DRAWINGS: SUBMIT SHOP DRAWINGS INDICATING MATERIAL CHARACTERISTICS, DETAILS OF CONSTRUCTION, CONNECTIONS, AND RELATIONSHIP WITH ADJACENT CONSTRUCTION.

1.3 QUALITY ASSURANCE

A. COMPLY WITH GOVERNING CODES AND REGULATIONS. PROVIDE PRODUCTS OF ACCEPTABLE MANUFACTURERS WHICH HAVE BEEN IN SATISFACTORY USE IN SIMILAR SERVICE FOR THREE YEARS. USE EXPERIENCED INSTALLERS. DELIVER, HANDLE, AND STORE MATERIALS IN ACCORDANCE WITH MANUFACTURER'S INSTRUCTIONS.

PART 2 PRODUCTS

2.1 MATERIALS

A. ROOF HATCHES: THERMALLY-BROKEN, INSULATED TYPE WITH METAL LID
1. MANUFACTURERS: BABROCK-DAVIS, THERMAIMAX; BILCO, THERMALLY BROKEN ROOF HATCH; OR APPROVED EQUAL
a. BASIS OF DESIGN:BILCO; TYPE S ROOF HATCH, THERMALLY BROKEN, 36" X 30"
2. MATERIAL: ZINC COATED (GALVINIZED) STEEL
3. INSULATION: R-18 MIN.

PART 3 EXECUTION

3.1 INSTALLATION

A. COMPLY WITHT ACCESSORY MANUFACTURERS' INSTRUCTIONS AND RECOMMENDATIONS. COORDINATE INSTALLATION WITH ROOFING SYSTEM TO ENSURE WEATHERTIGHT PERFORMANCE. ANCHOR SECURELY TO STRUCTURE TO WITHSTAND INWARD AND OUTWARD LOADS.
B. ISOLATE DISSIMILAR METALS TO PREVENT GALVANIC CORROSION.
C. TEST AND OPERATE UNITS; CLEAN, LUBRICATE AND ADJUST MOVING PARTS. LEAVE UNITS READY FOR FIELD PAINTING.

**END OF SECTION**

**SECTION 07 92 00**

**JOINT SEALANTS**

PART 1 GENERAL

1.1 SUMMARY

A. PROVIDE JOINT SEALERS AND FILLERS.

1.2 SUBMITTALS

A. PRODUCT DATA: SUBMIT MANUFACTURER'S PRODUCT DATA AND INSTALLATION INSTRUCTIONS FOR EACH MATERIAL AND PRODUCT USED.
B. SAMPLES: SUBMIT TWO REPRESENTATIVE SAMPLES OF EACH MATERIAL SPECIFIED INDICATING VISUAL CHARACTERISTICS AND FINISH. INCLUDE RANGE SAMPLES IF VARIATION OF FINISH IS ANTICIPATED.
1. INCLUDE MANUFACTURER'S FULL RANGE OF COLOR AND FINISH OPTIONS IF ADDITIONAL SELECTION IS REQUIRED.

1.3 QUALITY ASSURANCE

A. COMPLY WITH GOVERNING CODES AND REGULATIONS. PROVIDE PRODUCTS OF ACCEPTABLE MANUFACTURERS WHICH HAVE BEEN IN SATISFACTORY USE IN SIMILAR SERVICE FOR THREE YEARS. USE EXPERIENCED INSTALLERS. DELIVER, HANDLE, AND STORE MATERIALS IN ACCORDANCE WITH MANUFACTURER'S INSTRUCTIONS.
**B.** FIELD-CONSTRUCTED MOCK-UPS: EACH JOINT TYPE.

PART 2 PRODUCTS

2.1 MATERIALS

A. EXTERIOR JOINTS IN VERTICAL SURFACES, SILICONE:
1. MANUFACTURERS: DOW CORNING; GE SILICONES; TREMCO; OR APPROVED EQUAL.
2. MATERIALS: TWO COMPONENT SILICONE SEALANT, ASTM C 920.
B. EXTERIOR JOINTS IN HORIZONTAL SURFACES, URETHANE:
1. MANUFACTURERS: BASF; PECORA; SIKA; TREMCO; OR APPROVED EQUAL.
2. MATERIALS: SELF-LEVELING URETHANE SEALANT, ASTM C 920.
C. INTERIOR JOINTS, LIMITED MOVEMENT, ACRYLIC:
1. MANUFACTURERS: BOSTIK; PECORA CORPORATION; POLYMERIC SYSTEMS, INC.; SONNEBORN BUILDING PRODUCTS; TREMCO; OR APPROVED EQUAL.
2. MATERIALS: ACRYLIC-EMULSION, ASTM C 834.
3. VOC CONTENT: LESS THAN 50 G/L.
D. INTERIOR JOINTS, SANITARY SILICONE:
1. MANUFACTURERS: DOW CORNING; GE ADVANCED MATERIALS; TREMCO; OR APPROVED EQUAL.
2. MATERIALS: ONE-PART MILDEW-RESISTANT SILICONE SEALANT, ASTM C 920.
3. VOC CONTENT: LESS THAN 50 G/L.
E. ACCESSORIES:
1. PRIMERS AND CLEANERS: AS RECOMMENDED BY MANUFACTURER.
2. BACKINGS: ASTM C 1330, TYPE C, CLOSED CELL, CYLINDRICAL SHAPED, ELASTOMERIC TUBING TYPES.
3. TAPES: BOND BREAKER AND MASKING TYPES.

PART 3 EXECUTION

3.1 INSTALLATION

A. EXAMINE SUBSTRATE; REPORT UNSATISFACTORY CONDITIONS IN WRITING. BEGINNING WORK MEANS ACCEPTANCE OF SUBSTRATES.
B. PROVIDE SEALANTS IN COLORS AS SELECTED FROM MANUFACTURER'S STANDARDS.
C. INSTALL MATERIALS AND SYSTEMS IN ACCORDANCE WITH MANUFACTURER'S INSTRUCTIONS AND APPROVED SUBMITTALS. INSTALL MATERIALS AND SYSTEMS IN PROPER RELATION WITH ADJACENT CONSTRUCTION AND WITH UNIFORM APPEARANCE. COORDINATE WITH WORK OF OTHER SECTIONS. CLEAN AND PRIME JOINTS, AND INSTALL BOND BREAKERS, BACKER RODS AND SEALANT AS RECOMMENDED BY MANUFACTURERS.
D. DEPTH SHALL EQUAL WIDTH UP TO 1/2 INCH WIDE; DEPTH SHALL EQUAL 1/2 WIDTH FOR JOINTS MORE THAN 1/2 INCH WIDE.
E. CURE AND PROTECT SEALANTS AS DIRECTED BY MANUFACTURERS. REPLACE OR RESTORE DAMAGED SEALANTS. CLEAN ADJACENT SURFACES TO REMOVE SPILLAGE.

**END OF SECTION**

**SECTION 08 11 13**

**HOLLOW METAL DOORS AND FRAMES**

PART 1 GENERAL

1.1 SUMMARY

A. PROVIDE STEEL DOORS AND FRAMES.

1.2 SUBMITTALS

A. PRODUCT DATA: SUBMIT MANUFACTURER'S PRODUCT DATA AND INSTALLATION INSTRUCTIONS FOR EACH MATERIAL AND PRODUCT USED.
B. SHOP DRAWINGS: SUBMIT SHOP DRAWINGS INDICATING MATERIAL CHARACTERISTICS, DETAILS OF CONSTRUCTION, CONNECTIONS, AND RELATIONSHIP WITH ADJACENT CONSTRUCTION.
C. SCHEDULE: SUBMIT SCHEDULE FOR WORK OF THIS SECTION, USING SAME REFERENCE NUMBERS FOR DETAILS AND OPENINGS AS THOSE ON DRAWINGS. COORDINATE WITH OTHER DOORS AND DOOR HARDWARE SCHEDULE.

1.3 QUALITY ASSURANCE

A. COMPLY WITH GOVERNING CODES AND REGULATIONS. PROVIDE PRODUCTS OF ACCEPTABLE MANUFACTURERS WHICH HAVE BEEN IN SATISFACTORY USE IN SIMILAR SERVICE FOR THREE YEARS. USE EXPERIENCED INSTALLERS. DELIVER, HANDLE, AND STORE MATERIALS IN ACCORDANCE WITH MANUFACTURER'S INSTRUCTIONS.
B. STANDARDS: ANSI/SDI-100, RECOMMENDED SPECIFICATIONS FOR STANDARD STEEL DOORS AND FRAMES.
C. PERFORMANCE STANDARDS:
1. FIRE-RATED ASSEMBLIES: NFPA 80, AND ACCEPTABLE TESTING AGENCY LISTING.
2. THERMAL-RATED ASSEMBLIES AT EXTERIOR: ASTM C 236 OR ASTM C 976.
3. SOUND-RATED ASSEMBLIES AT MECHANICAL ROOMS: ASTM E 1408, AND ASTM E 413.

PART 2 PRODUCTS

2.1 MATERIALS

A. MANUFACTURERS: AMWELD BUILDING PRODUCTS; CECO DOOR PRODUCTS; CURRIES CO.; STEELCRAFT MANUFACTURING; OR APPROVED EQUAL.
B. INTERIOR STEEL DOORS:
1. MATERIAL: MINIMUM 18-GAUGE STEEL SHEET.
2. THICKNESS: 1-3/4 INCHES.
3. FINISH: FACTORY PRIMED AND FIELD PAINTED.
4. ACCESSORIES:
a. SIGHTPROOF STATIONARY LOUVERS.
b. GLAZING STOPS.
c. SILENCERS.
C. INTERIOR STEEL FRAMES:
1. MATERIAL: MINIMUM 16-GAUGE STEEL SHEET.
2. CORNERS: MITERED OR COPED.
3. TYPE: KNOCKDOWN.
4 FINISH: FACTORY PRIMED AND FIELD PAINTED.
D. EXTERIOR STEEL DOORS:
1. MATERIAL: MINIMUM 16-GAUGE GALVANIZED STEEL SHEET.
2. DOOR THICKNESS: 1-3/4 INCHES, THERMALLY INSULATED.
a. CORE: POLYSTYRENE OR POLYURETHANE.
b U-FACTOR: 0.61 MIN.
3. FINISH: FACTORY PRIMED AND FIELD PAINTED.
E. EXTERIOR STEEL FRAMES:
1. MATERIAL: MINIMUM 14-GAUGE GALVANIZED STEEL SHEET.
2. CORNERS: MITERED OR COPED.
3. TYPE: WELDED.
4. FINISH: FACTORY PRIMED AND FIELD PAINTED.

PART 3 EXECUTION

3.1 INSTALLATION

A. FABRICATE WORK TO BE RIGID, NEAT AND FREE FROM SEAMS, DEFECTS, DENTS, WARP, BUCKLE, AND EXPOSED FASTENERS. INSTALL DOORS AND FRAMES IN COMPLIANCE WITH SDI-100, NFPA 80, AND REQUIREMENTS OF AUTHORITIES HAVING JURISDICTION.
B. PROVIDE THERMALLY IMPROVED DOORS WITH MAXIMUM U-VALUE OF 0.24 BTU/HR./SQUARE FOOT DEGREE F (ASTM C 236) FOR ALL EXTERIOR DOORS AND ELSEWHERE AS NOTED.
C. PROVIDE ACOUSTICALLY IMPROVED DOORS WITH MINIMUM STC OF 33 (ASTM E 90 AND ASTM E 413) WHERE INDICATED.
D. HARDWARE: PREPARE DOORS AND FRAMES TO RECEIVE HARDWARE ON FINAL SCHEDULE. PROVIDE FOR 3 SILENCERS ON SINGLE DOORFRAMES; 2 ON DOUBLE DOOR FRAMES.
E. SHOP FINISH: CLEAN, TREAT AND PRIME PAINT ALL WORK WITH RUST-INHIBITING PRIMER COMPARABLE WITH FINISH PAINT SPECIFIED IN DIVISION 9 SECTION. PROVIDE ASPHALT EMULSION SOUND DEADENING COATING ON CONCEALED FRAME INTERIORS.
F. TOUCH UP DAMAGED COATINGS READY TO RECEIVE FINISH PAINTING.

**END OF SECTION**

**SECTION 08 11 19**

**STAINLESS STEEL DOOR FRAMES**

PART 1 GENERAL

1.1 SUMMARY

A. PROVIDE STAINLESS STEEL DOOR FRAMES, FOR TRAFFIC DOORS.

1.2 SUBMITTALS

A. PRODUCT DATA: SUBMIT MANUFACTURER'S PRODUCT DATA AND INSTALLATION INSTRUCTIONS FOR EACH MATERIAL AND PRODUCT USED.
B. SHOP DRAWINGS: SUBMIT SHOP DRAWINGS INDICATING MATERIAL CHARACTERISTICS, DETAILS OF CONSTRUCTION, CONNECTIONS, AND RELATIONSHIP WITH ADJACENT CONSTRUCTION.
C. SCHEDULE: SUBMIT SCHEDULE FOR WORK OF THIS SECTION, USING SAME REFERENCE NUMBERS FOR DETAILS AND OPENINGS AS THOSE ON DRAWINGS. COORDINATE WITH OTHER DOORS AND DOOR HARDWARE SCHEDULE.

1.3 QUALITY ASSURANCE

A. COMPLY WITH GOVERNING CODES AND REGULATIONS. PROVIDE PRODUCTS OF ACCEPTABLE MANUFACTURERS WHICH HAVE BEEN IN SATISFACTORY USE IN SIMILAR SERVICE FOR THREE YEARS. USE EXPERIENCED INSTALLERS. DELIVER, HANDLE, AND STORE MATERIALS IN ACCORDANCE WITH MANUFACTURER'S INSTRUCTIONS.
B. STANDARDS: ANSI/SDI-100, RECOMMENDED SPECIFICATIONS FOR STANDARD STEEL DOORS AND FRAMES.

PART 2 PRODUCTS

2.1 MATERIALS

A. INTERIOR STAINLESS STEEL FRAMES:
1. MATERIAL: MINIMUM 16-GAUGE STAINLESS STEEL SHEET.
2. CORNERS: MITERED.
3. TYPE: WELDED.
4. FINISH: NO. 4 DIRECTIONAL SATIN FINISH.

PART 3 EXECUTION

3.1 INSTALLATION

A. FABRICATE WORK TO BE RIGID, NEAT AND FREE FROM SEAMS, DEFECTS, DENTS, WARP, BUCKLE, AND EXPOSED FASTENERS. INSTALL DOORS AND FRAMES IN COMPLIANCE WITH SDI-100 AND REQUIREMENTS OF AUTHORITIES HAVING JURISDICTION.
B. HARDWARE: PREPARE DOORS AND FRAMES TO RECEIVE HARDWARE ON FINAL SCHEDULE.

**END OF SECTION**

**SECTION 08 31 00**

**ACCESS DOORS AND PANELS**

PART 1 GENERAL

1.1 SUMMARY

A. PROVIDE ACCESS DOORS AND PANELS FOR WALLS AND CEILINGS.

1.2 SUBMITTALS

A. PRODUCT DATA: SUBMIT MANUFACTURER'S PRODUCT DATA AND INSTALLATION INSTRUCTIONS FOR EACH MATERIAL AND PRODUCT USED.

1.3 QUALITY ASSURANCE

A. COMPLY WITH GOVERNING CODES AND REGULATIONS. PROVIDE PRODUCTS OF ACCEPTABLE MANUFACTURERS WHICH HAVE BEEN IN SATISFACTORY USE IN SIMILAR SERVICE FOR THREE YEARS. USE EXPERIENCED INSTALLERS. DELIVER, HANDLE, AND STORE MATERIALS IN ACCORDANCE WITH MANUFACTURER'S INSTRUCTIONS.

PART 2 PRODUCTS

2.1 MATERIALS

A. ACCESS DOORS:
1. MANUFACTURERS: J. L. INDUSTRIES; KARP ASSOCIATES; MILCOR; NYSTROM OR APPROVED EQUAL.
2. FRAMES: 16-GAUGE (.0598 INCH) SHEET STEEL WITH FLANGE.
3. FRAMES: 16-GAUGE (.0598 INCH) STAINLESS STEEL, AISI NO. 4 SATIN FINISH WITH FLANGE.
4. DOORS: 14-GAUGE (.0625 INCH) SHEET STEEL.
5. DOORS: 14-GAUGE (.0625 INCH) STAINLESS STEEL, AISI NO. 4 SATIN FINISH.
6. DOOR TYPE: FLUSH PANEL.
7. DOOR TYPE: RECESSED PANEL.
8. LOCKING DEVICES: CYLINDER LOCKS.
9. FIRE RATING: NFPA 80.

PART 3 EXECUTION

3.1 INSTALLATION

A. INSTALL MATERIALS AND SYSTEMS IN ACCORDANCE WITH MANUFACTURER'S INSTRUCTIONS AND APPROVED SUBMITTALS. INSTALL MATERIALS AND SYSTEMS IN PROPER RELATION WITH ADJACENT CONSTRUCTION AND WITH UNIFORM APPEARANCE. COORDINATE WITH WORK OF OTHER SECTIONS. INSTALL ASSEMBLIES COMPLETE WITH ALL HARDWARE, ANCHORS, INSERTS, SUPPORTS AND ACCESSORIES. TEST AND ADJUST OPERATION.
B. RESTORE DAMAGED FINISHES AND TEST FOR PROPER OPERATION. CLEAN AND PROTECT WORK FROM DAMAGE.

**END OF SECTION**

**SECTION 08 41 13**

**ALUMINUM ENTRANCES AND STOREFRONTS**

PART 1 GENERAL

1.1 SUMMARY

A. PROVIDE ENTRANCES AND STOREFRONT

1.2 SUBMITTALS

A. PRODUCT DATA: SUBMIT MANUFACTURER'S PRODUCT DATA AND INSTALLATION INSTRUCTIONS FOR EACH MATERIAL AND PRODUCT USED.
B. SHOP DRAWINGS: SUBMIT SHOP DRAWINGS INDICATING MATERIAL CHARACTERISTICS, DETAILS OF CONSTRUCTION, CONNECTIONS, AND RELATIONSHIP WITH ADJACENT CONSTRUCTION.
C. SCHEDULE: SUBMIT SCHEDULE FOR WORK OF THIS SECTION, USING SAME REFERENCE NUMBERS FOR DETAILS AND OPENINGS AS THOSE ON DRAWINGS. COORDINATE WITH OTHER DOORS AND HARDWARE SCHEDULE.
D. WARRANTY: SUBMIT MANUFACTURER'S STANDARD WARRANTY. INCLUDE LABOR AND MATERIALS TO REPAIR OR REPLACE DEFECTIVE MATERIALS.
1. WARRANTY PERIOD: 5 YEARS.

1.3 QUALITY ASSURANCE

A. COMPLY WITH GOVERNING CODES AND REGULATIONS. PROVIDE PRODUCTS OF ACCEPTABLE MANUFACTURERS WHICH HAVE BEEN IN SATISFACTORY USE IN SIMILAR SERVICE FOR THREE YEARS. USE EXPERIENCED INSTALLERS. DELIVER, HANDLE, AND STORE MATERIALS IN ACCORDANCE WITH MANUFACTURER'S INSTRUCTIONS.

PART 2 PRODUCTS

2.1 MATERIALS

A. ALUMINUM ENTRANCES AND STOREFRONT:
1. MANUFACTURERS: EFCO CORP.; KAWNEER COMPANY; YKK AP AMERICA, INC.; OR APPROVED EQUAL.
a. BASIS OF DESIGN: KAWNEER; 451T
2. ALUMINUM MEMBERS: ASTM B 209, ASTM B 221, ASTM B 429
3. STEEL REINFORCEMENT:ASTM A 36, ASTM A 1008, ASTM A 1011
4. DOOR STYLE: MEDIUM STILE AND RAIL DOORS
5. STOREFRONT STYLE: ALUMINUM FRAMED
6. GLASS AND GLAZING, INTERIOR: SINGLE GLAZING, TEMPERED.
7. GLASS AND GLAZING, EXTERIOR: INSULATING GLAZING, TEMPERED
8. GLAZING COLOR: CLEAR GLASS
9. GLAZING COLOR: CLEAR WITH LOW-E COATING ON NO. 3 SURFACE.
10. ALUMINUM FINISH, INTERIOR: COLOR ANODIZED; BLACK
11. ALUMINUM FINISH, EXTERIOR: FLUOROPOLYMER, 3-COAT: BLACK
12. AUXILIARY MATERIALS:
a. WEATHERSTRIPPING AND THRESHOLDS

PART 3 EXECUTION

3.1 INSTALLATION

A. TAKE FIELD MEASUREMENTS BEFORE FABRICATION WHERE POSSIBLE; DO NOT DELAY JOB PROGRESS.
B. INSTALL MATERIALS AND SYSTEMS IN ACCORDANCE WITH MANUFACTURER'S INSTRUCTIONS AND APPROVED SUBMITTALS. INSTALL MATERIALS AND SYSTEMS IN PROPER RELATION WITH ADJACENT CONSTRUCTION AND WITH UNIFORM APPEARANCE. COORDINATE WITH WORK OF OTHER SECTIONS.
C. ANCHOR SECURELY IN PLACE: INSTALL PLUMB, LEVEL AND IN TRUE ALIGNMENT. ISOLATE DISSIMILAR MATERIALS TO PREVENT CORROSION.
D. COORDINATE WITH GLASS AND GLAZING WORK; INSTALL HARDWARE AND INSTALL FOR SMOOTH, PROPER OPERATION.
E. CLEAN AND PROTECT COMPLETED SYSTEM; REPAIR DAMAGE.

**END OF SECTION**

**SECTION 08 80 00**

**GLAZING**

PART 1 GENERAL

1.1 SUMMARY

A. PROVIDE GLASS AND GLAZING.

1.2 SUBMITTALS

A. PRODUCT DATA: SUBMIT MANUFACTURER'S PRODUCT DATA AND INSTALLATION INSTRUCTIONS FOR EACH MATERIAL AND PRODUCT USED.
B. SHOP DRAWINGS: SUBMIT SHOP DRAWINGS INDICATING MATERIAL CHARACTERISTICS, DETAILS OF CONSTRUCTION, CONNECTIONS, AND RELATIONSHIP WITH ADJACENT CONSTRUCTION.
C. WARRANTY: SUBMIT MANUFACTURER'S STANDARD WARRANTY. INCLUDE LABOR AND MATERIALS TO REPAIR OR REPLACE DEFECTIVE MATERIALS.
1. LAMINATED GLASS: MANUFACTURER'S 5-YEAR WARRANTY.
2. COATED GLASS: MANUFACTURER'S 10-YEAR WARRANTY.
3. INSULATING GLASS: MANUFACTURER'S 10-YEAR WARRANTY.

1.3 QUALITY ASSURANCE

A. COMPLY WITH GOVERNING CODES AND REGULATIONS. PROVIDE PRODUCTS OF ACCEPTABLE MANUFACTURERS WHICH HAVE BEEN IN SATISFACTORY USE IN SIMILAR SERVICE FOR THREE YEARS. USE EXPERIENCED INSTALLERS. DELIVER, HANDLE, AND STORE MATERIALS IN ACCORDANCE WITH MANUFACTURER'S INSTRUCTIONS.
B. GLAZING FOR FIRE-RATED ASSEMBLIES: GLAZING FOR ASSEMBLIES THAT COMPLY WITH NFPA 80.
C. SAFETY GLAZING PRODUCTS: COMPLY WITH TESTING REQUIREMENTS IN 16 CFR 1201.
D. GLAZING PUBLICATIONS:
1. GANA PUBLICATIONS: GANA'S "GLAZING MANUAL." AND "LAMINATED GLASS DESIGN GUIDE."
2. IGMA PUBLICATION FOR INSULATING GLASS: SIGMA TM-3000, "GLAZING GUIDELINES FOR SEALED INSULATING GLASS UNITS."

PART 2 PRODUCTS

2.1 MATERIALS

A. GLASS AND GLAZING:
1. MANUFACTURERS: GUARDIAN; PPG; VIRACON; OR APPROVED EQUAL.
2. INTERIOR TYPE: SINGLE GLASS UNITS, TEMPERED AT LOCATIONS AS REQUIRED BY CODE.
3. EXTERIOR TYPE: HIGH-PERFORMANCE INSULATING GLASS UNITS WITH LOW-E COATING ON NO. 3 SURFACE, TEMPERED AT LOCATIONS AS REQUIRED BY CODE.
4. AUXILIARY MATERIALS:
a. COMPRESSION GASKETS.
b. ELASTOMERIC GLAZING SEALANTS.
c. PREFORMED GLAZING TAPES.
d. GLAZING GASKETS.
e. SETTING BLOCKS, SPACERS, AND COMPRESSIBLE FILLER RODS.

PART 3 EXECUTION

3.1 INSTALLATION

A. INSPECT FRAMING AND REPORT UNSATISFACTORY CONDITIONS IN WRITING.
B. COMPLY WITH GANA "GLAZING MANUAL" AND MANUFACTURER'S INSTRUCTIONS AND RECOMMENDATIONS. USE MANUFACTURER'S RECOMMENDED SPACERS, BLOCKS, PRIMERS, SEALERS, GASKETS AND ACCESSORIES.
C. INSTALL GLASS WITH UNIFORMITY OF PATTERN, DRAW, BOW AND ROLLER MARKS.
D. INSTALL SEALANTS TO PROVIDE COMPLETE WETTING AND BOND AND TO CREATE A SUBSTANTIAL WASH AWAY FROM GLASS.
E. REMOVE AND REPLACE DAMAGED GLASS AND GLAZING. WASH, POLISH AND PROTECT ALL GLASS SUPPLIED UNDER THIS SECTION.

**END OF SECTION**

**SECTION 09 21 16**

**GYPSUM BOARD ASSEMBLIES**

PART 1 GENERAL

1.1 SUMMARY

A. PROVIDE GYPSUM BOARD ASSEMBLIES.

1.2 QUALITY ASSURANCE

A. COMPLY WITH GOVERNING CODES AND REGULATIONS. PROVIDE PRODUCTS OF ACCEPTABLE MANUFACTURERS WHICH HAVE BEEN IN SATISFACTORY USE IN SIMILAR SERVICE FOR THREE YEARS. USE EXPERIENCED INSTALLERS. DELIVER, HANDLE, AND STORE MATERIALS IN ACCORDANCE WITH MANUFACTURER'S INSTRUCTIONS.
B. TOLERANCES: NOT MORE THAN 1/16-INCH DIFFERENCE IN TRUE PLANE AT JOINTS BETWEEN ADJACENT BOARDS BEFORE FINISHING. AFTER FINISHING, JOINTS SHALL BE NOT BE VISIBLE. NOT MORE THAN 1/8 INCH IN 10 FEET DEVIATION FROM TRUE PLANE, PLUMB, LEVEL AND PROPER RELATION TO ADJACENT SURFACES IN FINISHED WORK.
C. FIRE RESISTANCE FOR FIRE-RATED ASSEMBLIES: ASTM E 119.
D. PERFORMANCE: FIRE, STRUCTURAL, AND SEISMIC PERFORMANCE MEETING REQUIREMENTS OF BUILDING CODE AND LOCAL AUTHORITIES.

PART 2 PRODUCTS

2.1 MATERIALS

A. GYPSUM BOARD:
1. MANUFACTURERS: CONTINENTAL BUILDING PRODUCTS (FORMERLY LAFARGE): GEORGIA PACIFIC; NATIONAL GYPSUM CO.; USG; OR APPROVED EQUAL.
2. APPLICATION: INTERIOR WALLS, PARTITIONS, AND CEILINGS WITH TAPE AND JOINT COMPOUND FINISH.
3. APPLICATION: CEMENTITIOUS BACKER UNITS FOR APPLICATION OF TILE.
4. APPLICATION: STEEL FRAMING SYSTEMS TO RECEIVE GYPSUM BOARD.
5. APPLICATION: REMODELING AT EXISTING GYPSUM BOARD CONSTRUCTION.
6. APPLICATION: ACOUSTIC INSULATION AND SEALANTS IN GYPSUM BOARD ASSEMBLIES.
7. APPLICATION: INSTALLATION OF ACCESS PANELS IN GYPSUM BOARD ASSEMBLIES.
8. MATERIAL STANDARD: ASTM C1396.
9. TYPE: BOARD FOR TAPE AND JOINT COMPOUND FINISH.
a. TYPE: FIRE-RATED.
b. TYPICAL THICKNESS: 5/8 INCH.
10. JOINT TREATMENT: ASTM C474 AND ASTM C840, 3-COAT SYSTEM, PAPER OR FIBERGLASS TAPE.
11. AUXILIARY MATERIALS:
a. CORNER BEAD, EDGE TRIM AND CONTROL JOINTS.
b. EXTRUDED ALUMINUM REVEALS AND CHANNELS.
c. GYPSUM BOARD SCREWS, ASTM C 1002.
d. FASTENING ADHESIVE, LOW VOC TYPE.
e. GLASS FIBER OR MINERAL FIBER ACOUSTICAL INSULATION, WITH NO ADDED FORMALDEHYDE.
f. CONCEALED ACOUSTICAL SEALANT, LOW VOC TYPE.
B. CEMENTITIOUS BACKER UNITS:
1. MATERIAL STANDARD: ANSI A118.9.
2. TYPE: CEMENT-COATED PORTLAND CEMENT PANELS.
a. THICKNESS: 5/8 INCH NOMINAL.
C. STEEL FRAMING FOR WALLS AND PARTITIONS:
1. MATERIAL STANDARD: ASTM C645.
2. STUD THICKNESS: 20 GAUGE (.0329 INCH).
3. STUD DEPTH: REFER TO DRAWINGS.
4. FURRING CHANNEL THICKNESS: 20 GAUGE (.0329 INCH).
5. AUXILIARY FRAMING COMPONENTS: FURRING BRACKETS, RESILIENT FURRING CHANNELS, Z-FURRING MEMBERS, AND NON-CORROSIVE FASTENERS.
D. STEEL FRAMING FOR SUSPENDED AND FURRED CEILINGS:
1. MATERIAL STANDARD: ASTM C645.
2. ATTACHMENT: RESILIENT.
3. STUD THICKNESS: 20 GAUGE (.0329 INCH).
4. ACCESSORIES: FURRING CHANNELS, HANGERS AND INSERTS.

PART 3 EXECUTION

3.1 INSTALLATION

A. STEEL FRAMING: INSTALL STEEL FRAMING IN COMPLIANCE WITH ASTM C 754. INSTALL WITH TOLERANCES NECESSARY TO PRODUCE SUBSTRATE FOR GYPSUM BOARD ASSEMBLIES WITH TOLERANCES SPECIFIED. INCLUDE BLOCKING FOR ITEMS SUCH AS RAILINGS, GRAB BARS, CASEWORK, TOILET ACCESSORIES, WINDOW TREATMENT AND SIMILAR ITEMS.
B. TAPE AND JOINT COMPOUND: INSTALL GYPSUM BOARD FOR TAPE AND 3-COAT JOINT COMPOUND FINISH IN COMPLIANCE WITH ASTM C 840 AND GA 216, LEVEL 4 FINISH. INSTALL GYPSUM BOARD ASSEMBLIES TRUE, PLUMB, LEVEL AND IN PROPER RELATION TO ADJACENT SURFACES.
C. PROVIDE FIRE-RATED SYSTEMS WHERE INDICATED AND WHERE REQUIRED BY AUTHORITIES HAVING JURISDICTION.
D. INSTALL BOARDS VERTICALLY. DO NOT ALLOW BUTT-TO-BUTT JOINTS AND JOINTS THAT DO NOT FALL OVER FRAMING MEMBERS.
E. WHERE NEW PARTITIONS MEET EXISTING CONSTRUCTION, REMOVE EXISTING CORNER BEADS TO PROVIDE A SMOOTH TRANSITION.
F. PROVIDE ACOUSTICAL INSULATION FULL HEIGHT AND THICKNESS IN WALLS AND CEILINGS AT TOILET ROOMS, AT CONFERENCE ROOMS, AT PLUMBING WALLS, AND WHERE REQUIRED.
G. PROVIDE ACOUSTICAL SEALANT AT BOTH FACES AT TOP AND BOTTOM RUNNER TRACKS, WALL PERIMETERS, OPENINGS, EXPANSION AND CONTROL JOINTS.
H. INSTALL TRIM IN STRICT COMPLIANCE WITH MANUFACTURER'S INSTRUCTIONS AND RECOMMENDATIONS.
I. REPAIR SURFACE DEFECTS. LEAVE READY FOR FINISH PAINTING OR WALL TREATMENT.

**END OF SECTION**

**SECTION 09 30 00**

**TILING**

PART 1 GENERAL

1.1 SUMMARY

A. PROVIDE TILE.

1.2 QUALITY ASSURANCE

A. COMPLY WITH GOVERNING CODES AND REGULATIONS. PROVIDE PRODUCTS OF ACCEPTABLE MANUFACTURERS WHICH HAVE BEEN IN SATISFACTORY USE IN SIMILAR SERVICE FOR THREE YEARS. USE EXPERIENCED INSTALLERS. DELIVER, HANDLE, AND STORE MATERIALS IN ACCORDANCE WITH MANUFACTURER'S INSTRUCTIONS.
B. TILE: ANSI A 137.1.
C. TILE SETTING MATERIALS: ANSI A 118 SERIES STANDARD SPECIFICATIONS.
**D.** TILE INSTALLATION: ANSI 108 SERIES STANDARD SPECIFICATIONS AND TILE COUNCIL OF AMERICA, HANDBOOK FOR CERAMIC TILE INSTALLATION.

PART 2 PRODUCTS

2.1 MATERIALS

A. TILE:
1. APPLICATION: EXTERIOR WALL BASE TILE OVER TILE BACKER BOARD.
2. APPLICATION: INTERIOR WALL AND BASE TILE OVER TILE BACKER BOARD.
3. APPLICATION: INTERIOR FLOOR TILE OVER CONCRETE SLAB.
4. TYPE: REFER TO DRAWINGS.
B. SETTING MATERIALS:
1. MANUFACTURERS: CUSTOM BUILDING PRODUCTS; LATICRETE INTERNATIONAL, INC.; MAPEI CORP.; SCHLUTER SYSTEM LP; OR APPROVED EQUAL.
2. MORTAR SETTING BED, THICKSET.
a. LATEX ADDITIVE.
3. THIN-SET MORTAR.
a. LATEX-PORTLAND CEMENT MORTAR.
4. GROUT.
a. EPOXY-MODIFIED, PORTLAND CEMENT GROUT, ANSI A118.8.
1). BASIS OF DESIGN: BOSTIK; SANDED CERAMIC TILE GROUT, MIXED WITH 1900 EPOXY MODIFIED GROUT.
5. CRACK SUPPRESSION AND WATERPROOFING MEMBRANE UNDER TILE, ANSI A 118.10.
6. ELASTOMERIC SEALANTS, LOW VOC TYPE.
7. STAINLESS STEEL EDGE AND TRANSITION STRIPS (TR-#).
a. BASIS OF DESIGN: SCHLUTER SYSTEMS.

PART 3 EXECUTION

3.1 INSTALLATION

A. COMPLY WITH TILE COUNCIL OF AMERICA AND ANSI STANDARD SPECIFICATIONS FOR INSTALLATION FOR SUBSTRATE AND INSTALLATION REQUIRED. COMPLY WITH MANUFACTURER'S INSTRUCTIONS AND RECOMMENDATIONS.
B. INSTALL WATERPROOF MEMBRANE IN ACCORDANCE WITH MANUFACTURER'S INSTRUCTIONS AND RECOMMENDATIONS.
C. LAY TILE IN PATTERN PER DRAWINGS, WITH ALIGNMENT GRIDS. LAYOUT TILE TO PROVIDE UNIFORM JOINT WIDTHS AND TO MINIMIZE CUTTING; DO NOT USE LESS THAN 1/2 TILE UNITS.
1. JOINT WIDTH: 1/8 INCH MAX.
D. PROVIDE SEALANT JOINTS WHERE RECOMMENDED BY TCA AND APPROVED BY ARCHITECT.
E. GROUT AND CURE, CLEAN AND PROTECT.

3.2 SCHEDULE

A. TILE SCHEDULE:
1. EXTERIOR TILE WALL BASE: TILE OVER TILE BACKER BOARD WITH EXTERIOR GRADE THIN-SET LATEX-MODIFIED CEMENT MORTAR AND EPOXY GROUT.
2. INTERIOR TILE WALLS AND BASE: TILE OVER TILE BACKER BOARD WITH THIN-SET LATEX-MODIFIED CEMENT MORTAR AND EPOXY GROUT.
3. INTERIOR TILE FLOORS, LARGE FORMAT TILES: TILE OVER CONCRETE SLAB WITH CRACK SUPPRESSION MEMBRANE, THICK-SET LATEX PORTLAND CEMENT MORTAR AND EPOXY GROUT, SLOPE TO FLOOR DRAINS.
4. INTERIOR TILE FLOORS, TYPICAL: TILE OVER CONCRETE SLAB WITH WATERPROOFING MEMBRANE, THICK-SET LATEX-PORTLAND CEMENT MORTAR AND EPOXY GROUT, SLOPE TO FLOOR DRAINS.

**END OF SECTION**

**SECTION 09 51 00**

**ACOUSTICAL CEILINGS**

PART 1 GENERAL

1.1 SUMMARY

A. PROVIDE ACOUSTICAL CEILINGS AND SUSPENSION SYSTEMS.

1.2 QUALITY ASSURANCE

A. COMPLY WITH GOVERNING CODES AND REGULATIONS. PROVIDE PRODUCTS OF ACCEPTABLE MANUFACTURERS WHICH HAVE BEEN IN SATISFACTORY USE IN SIMILAR SERVICE FOR THREE YEARS. USE EXPERIENCED INSTALLERS. DELIVER, HANDLE, AND STORE MATERIALS IN ACCORDANCE WITH MANUFACTURER'S INSTRUCTIONS.
B. PERFORMANCE: FIRE, STRUCTURAL, AND SEISMIC PERFORMANCE MEETING REQUIREMENTS OF BUILDING CODE AND LOCAL AUTHORITIES. ACOUSTICAL PERFORMANCE BASED ON PROJECT REQUIREMENTS.

PART 2 PRODUCTS

2.1 MATERIALS

A. MINERAL FIBER ACOUSTICAL CEILINGS (**C-10**):
1. MANUFACTURERS: ARMSTRONG WORLD INDUSTRIES; CERTAINTEED CELOTEX; USG; OR APPROVED EQUAL.
a. BASIS OF DESIGN: USG; SHEETROCK BRAND ITEM NO. 3270, VINYL-FACED.
2. PANEL SIZE AND TYPE: REFER TO DRAWINGS.
3. GRID, BASIS OF DESIGN: USG ZXLA 5/8" WHITE T-GRID FOR WASHABLE TILE.
4. SUSPENSION SYSTEM: INTERMEDIATE DUTY.
5. AUXILIARY MATERIALS:
a. EDGE MOLDING AND TRIM.
b. HOLD-DOWN CLIPS.
c. CONCEALED ACOUSTICAL SEALANT, LOW VOC TYPE (LESS THAN 50 G/L).

PART 3 EXECUTION

3.1 INSTALLATION

A. INSTALL MATERIALS AND SUSPENSION SYSTEMS IN ACCORDANCE WITH MANUFACTURER'S INSTRUCTIONS AND RECOMMENDATIONS, AND ASTM C 636. COORDINATE INSTALLATION WITH LOCATION OF MECHANICAL AND ELECTRICAL WORK TO ENSURE PROPER LOCATIONS AND ANCHORAGE.
B. LEVEL CEILING TO WITHIN 1/8 INCH IN 10 FEET IN BOTH DIRECTIONS. SCRIBE AND CUT PANELS TO FIT ACCURATELY. MEASURE AND LAY OUT TO AVOID LESS THAN HALF PANEL UNITS.
C. REMOVAL AND REINSTALLATION AT EXISTING CEILINGS: REMOVE AND STORE MATERIALS FOR REUSE WHEN ALLOWED. HANDLE WITH WHITE GLOVES AND AVOID DAMAGING CORNERS AND EDGES. CLEAN TILES AND GRID SYSTEM, WHICH HAVE BEEN REMOVED. PROVIDE ADDITIONAL MATERIALS TO COMPLETE THE WORK AND TO REPLACE DAMAGED EXISTING MATERIALS. NEW MATERIALS SHALL MATCH EXISTING MATERIALS AS APPROVED.
D. ADJUST, CLEAN, AND TOUCH UP ALL SYSTEM COMPONENTS.

**END OF SECTION**

**SECTION 09 67 00**

**FLUID-APPLIED FLOORING**

PART 1 GENERAL

1.1 SUMMARY

A. PROVIDE FLUID-APPLIED FLOORING AND FLOOR PREPARATION.

1.2 QUALITY ASSURANCE

A. COMPLY WITH GOVERNING CODES AND REGULATIONS. PROVIDE PRODUCTS OF ACCEPTABLE MANUFACTURERS WHICH HAVE BEEN IN SATISFACTORY USE IN SIMILAR SERVICE FOR THREE YEARS. USE EXPERIENCED INSTALLERS. DELIVER, HANDLE, AND STORE MATERIALS IN ACCORDANCE WITH MANUFACTURER'S INSTRUCTIONS.

PART 2 PRODUCTS

2.1 MATERIALS

A. FLUID APPLIED FLOORING (E-1):
1. BASIS OF DESIGN: DUR-A-FLEX; POLY-CRETE URETHANE SLURRY SYSTEM.
2. LOW EMITTING MATERIAL: CA 01350 COMPLIANT.
3. TYPE: CHEMICAL- AND HEAT-RESISTANT POLYURETHANE FLOORING.
a. COLORS AND PATTERNS: GRAY.
4. THICKNESS: NOT LESS THAN 3/16 INCH, AS INDICATED ON DRAWINGS.
5. SURFACE: SLIP-RESISTANT SURFACE.
a. NATIONAL FLOOR SAFETY INSTITUTE, CERTIFIED AS HIGH TRACTION.
6. AUXILIARY MATERIALS:
a. INTEGRAL BASE.

PART 3 EXECUTION

3.1 INSTALLATION

A. PREPARE SURFACES AND INSTALL MATERIALS AND SYSTEMS IN ACCORDANCE WITH MANUFACTURER'S INSTRUCTIONS.
B. INSTALL MATERIALS AND SYSTEMS IN PROPER RELATION WITH ADJACENT CONSTRUCTION AND WITH UNIFORM APPEARANCE. COORDINATE WITH WORK OF OTHER SECTIONS.
1. APPLY IN ONE SINGLE BATCH FOR ENTIRE FLOOR AREA.
2. INSTALL INTEGRAL COVE BASE.
C. RESTORE DAMAGED FINISHES. CLEAN AND PROTECT WORK FROM DAMAGE.

**END OF SECTION**

**SECTION 09 80 00**

**ACOUSTICAL TREATMENT**

PART 1 GENERAL

1.1 SUMMARY

A. PROVIDE ACOUSTICAL WALL PANELS.

1.2 QUALITY ASSURANCE

A. COMPLY WITH GOVERNING CODES AND REGULATIONS. PROVIDE PRODUCTS OF ACCEPTABLE MANUFACTURERS WHICH HAVE BEEN IN SATISFACTORY USE IN SIMILAR SERVICE FOR THREE YEARS. USE EXPERIENCED INSTALLERS. DELIVER, HANDLE, AND STORE MATERIALS IN ACCORDANCE WITH MANUFACTURER'S INSTRUCTIONS.
B. PERFORMANCE: FIRE PERFORMANCE MEETING REQUIREMENTS OF BUILDING CODE AND LOCAL AUTHORITIES.

PART 2 PRODUCTS

2.1 MATERIALS

A. ACOUSTICAL TREATMENT (C-2):
1. BASIS OF DESIGN: ARMSTRONG TECTUM CEILING PANELS, WHITE COLOR.
2. TYPE: ACOUSTIC PANELS FOR CEILING SOUND TREATMENT.
3. AUXILIARY MATERIALS:
a. CLIPS AND HANGERS.

PART 3 EXECUTION

3.1 INSTALLATION

A. TAKE FIELD MEASUREMENTS PRIOR TO FABRICATION WHERE PRACTICAL. DO NOT DELAY JOB PROGRESS. COMPLY WITH ASTM C 636.
B. INSTALL MATERIALS AND SYSTEMS IN ACCORDANCE WITH MANUFACTURER'S INSTRUCTIONS. INSTALL MATERIALS AND SYSTEMS IN PROPER RELATION WITH ADJACENT CONSTRUCTION AND WITH UNIFORM APPEARANCE. COORDINATE WITH WORK OF OTHER SECTIONS.
C. ADJUST, CLEAN, AND TOUCH UP ALL SYSTEM COMPONENTS.

**END OF SECTION**

Bergmeyer

BOS
51 Sleeper St.
6th Floor
Boston, MA 02210
617.542.1025

LA
800 South Figueroa St.
Suite 1080
Los Angeles, CA 90017
212.337.1090

www.bergmeyer.com

CONSULTANTS:

SEAL/ SIGNATURE:

| NO. | BY | DATE | DESCRIPTION |
|---|---|---|---|
| | | 2021-01-11 | PERMIT/BID SET |
| | | 2020-12-21 | 75% SET |

SHAKE SHACK - LEE'S SUMMIT MO

2051 NW LOWENSTEIN DRIVE
LEE'S SUMMIT, MISSOURI 64081
SHACK #1348

PERMIT/BID SET

ARCHITECTURAL SPECIFICATIONS

DRAWN BY: CS & WQL
CHECKED BY: JS
JOB NO: 20068.00

A704

1/11/2021 6:08:56 PM C:\Users\qlevine\Documents\068_Shake Shack-Lee's Summit_Central_qlevine@bergmeyer.com.rvt

**SECTION 09 91 00**

**PAINTING**

PART 1 GENERAL

1.1 SUMMARY

A. PROVIDE SURFACE PREPARATION AND PAINTING.

1.3 QUALITY ASSURANCE

A. COMPLY WITH GOVERNING CODES AND REGULATIONS. PROVIDE PRODUCTS OF ACCEPTABLE MANUFACTURERS WHICH HAVE BEEN IN SATISFACTORY USE IN SIMILAR SERVICE FOR THREE YEARS. USE EXPERIENCED INSTALLERS. DELIVER, HANDLE, AND STORE MATERIALS IN ACCORDANCE WITH MANUFACTURER'S INSTRUCTIONS.
B. REGULATIONS: COMPLIANCE WITH VOC AND ENVIRONMENTAL REGULATIONS.

PART 2 PRODUCTS

2.1 MATERIALS

A. PAINTING:
1. BASIS OF DESIGN. REGULAR PAINTS: BENJAMIN MOORE; SHERWIN WILLIAMS; OR APPROVED EQUAL.
2. APPLICATION: INTERIOR UNFINISHED SURFACES.
3. APPLICATION: EXTERIOR UNFINISHED SURFACES.
4. APPLICATION: EXPOSED MECHANICAL AND ELECTRICAL ITEMS.
5. APPLICATION: REPAINTING OF EXISTING SURFACES.
6. PRIMARY COATING TYPE: LOW VOC INTERIOR PAINTS.
   a. FLAT PAINTS: LESS THAN 50 G/L.
   b. NON-FLAT PAINTS: LESS THAN 150 G/L.
   c. PAINTS APPLIED TO FERROUS METALS: LESS THAN 250 G/L.
7. PRIMARY PAINT SYSTEMS: PRIMER PLUS TWO FINISH COATS.
8. COLORS: REFER TO FINISH SCHEDULE.

PART 3 EXECUTION

3.1 INSTALLATION

A. INSPECT SURFACES, REPORT UNSATISFACTORY CONDITIONS IN WRITING, BEGINNING WORK MEANS ACCEPTANCE OF SUBSTRATE.
B. COMPLY WITH MANUFACTURER'S INSTRUCTIONS AND RECOMMENDATIONS FOR PREPARATION, PRIMING AND COATING WORK. COORDINATE WITH WORK OF OTHER SECTIONS.
C. AT EXISTING AREAS TO BE REPAINTED, REMOVE BLISTERED OR PEELING PAINT TO SOUND SUBSTRATES. REMOVE CHALK DEPOSITS AND MILDEW AND WASH ALL SURFACES WITH MILD DETERGENT. PERFORM RELATED MINOR PREPARATION INCLUDING CAULK AND GLAZING COMPOUNDS. SPOT PRIME BARE AREAS BEFORE PRIMING AND PAINTING AS SPECIFIED.
D. MATCH APPROVED MOCK-UPS FOR COLOR, TEXTURE, AND PATTERN. RE-COAT OR REMOVE AND REPLACE WORK WHICH DOES NOT MATCH OR SHOWS LOSS OF ADHESION. CLEAN UP, TOUCH UP AND PROTECT WORK.

3.2 EXTERIOR PAINT SCHEDULE

A. EXTERIOR CONCRETE AND STUCCO:
1. GLOSS: REFER TO DRAWINGS.
2. SYSTEM:
   a. 1 COAT PRIMER.
   b. 2 COATS ACRYLIC ENAMEL.
B. EXTERIOR CONCRETE MASONRY UNITS:
1. GLOSS: REFER TO DRAWINGS.
2. SYSTEM:
   a. 1 COAT BLOCK FILLER.
   b. 2 COATS ACRYLIC ENAMEL.
C. EXTERIOR FERROUS METAL (NON-GALVANIZED):
1. GLOSS: REFER TO DRAWINGS.
2. SYSTEM:
   a. 1 COAT RUST INHIBITING METAL PRIMER.
   b. 2 COATS LATEX ENAMEL.
D. EXTERIOR ALUMINUM:
1. GLOSS: REFER TO DRAWINGS.
2. SYSTEM:
   a. 1 COAT UNIVERSAL METAL PRIMER.
   b. 2 COATS LATEX ENAMEL.

3.3 INTERIOR PAINT SCHEDULE

A. INTERIOR GYPSUM WALL BOARD (DRYWALL):
1. GLOSS: REFER TO DRAWINGS.
2. SYSTEM:
   a. 1 COAT LATEX PRIMER.
   b. 2 COATS LATEX FINISH.
B. INTERIOR WOOD FOR PAINTED FINISH:
1. GLOSS: REFER TO DRAWINGS.
2. SYSTEM:
   a. 1 COAT LATEX PRIMER OR WOOD UNDERCOATER.
   b. 2 COATS LATEX FINISH.
C. INTERIOR WOOD FOR STAINED AND TRANSPARENT FINISH:
1. GLOSS: REFER TO DRAWINGS.
2. SYSTEM:
   a. BASIS OF DESIGN: VERMONT NATURAL COATINGS; POLYWHEY.
   b. 1 COAT WATER BASE WOOD STAIN.
   c. 1 COAT WATER BASE SEALER.
   d. 2 COATS WATER BASE VARNISH.
D. INTERIOR WOOD FOR STAINED AND WAX POLISH FINISH:
1. GLOSS: REFER TO DRAWINGS.
2. SYSTEM:
   a. 1 COAT WATER BASE WOOD STAIN.
   b. 1 COAT WATER BASE SEALER.
   c. 3 COATS PASTE WAX.
E. INTERIOR FERROUS METALS:
1. GLOSS: REFER TO DRAWINGS.
2. SYSTEM:
   a 1 COAT RUST-INHIBITING PRIMER.
   b. 2 COATS LATEX ENAMEL.
F. INTERIOR EXPOSED CEILING AND DUCTWORK:
1. GLOSS: REFER TO DRAWINGS.
2. SYSTEM:
   a. 2 COATS WATER-BASED DRY FALL (DRY FOG) PAINT.
G. INTERIOR CONCRETE FLOOR:
1. GLOSS: SEMI-GLOSS, TO MATCH ARCHITECT'S SAMPLE.
2. SYSTEM:
   a. 1 COAT, CURECRETE CHEMICAL CO., ASHFORD FORMULA, AT 50 SQ. FT. PER GALLON.

**END OF SECTION**

**SECTION 10 11 00**

**VISUAL DISPLAY SURFACES**

PART 1 GENERAL

1.1 SUMMARY

A. PROVIDE VISUAL DISPLAY BOARDS.

1.2 SUBMITTALS

A. PRODUCT DATA: SUBMIT MANUFACTURER'S PRODUCT DATA AND INSTALLATION INSTRUCTIONS FOR EACH MATERIAL AND PRODUCT USED.
B. SHOP DRAWINGS: SUBMIT SHOP DRAWINGS INDICATING MATERIAL CHARACTERISTICS, DETAILS OF CONSTRUCTION, CONNECTIONS, AND RELATIONSHIP WITH ADJACENT CONSTRUCTION.

1.3 QUALITY ASSURANCE

A. COMPLY WITH GOVERNING CODES AND REGULATIONS. PROVIDE PRODUCTS OF ACCEPTABLE MANUFACTURERS WHICH HAVE BEEN IN SATISFACTORY USE IN SIMILAR SERVICE FOR THREE YEARS. USE EXPERIENCED INSTALLERS. DELIVER, HANDLE, AND STORE MATERIALS IN ACCORDANCE WITH MANUFACTURER'S INSTRUCTIONS.

PART 2 PRODUCTS

2.1 MATERIALS

A. MARKERBOARDS:
1. MATERIALS: PORCELAIN ENAMEL FACE FOR LIQUID-TYPE MARKERS, CORE MATERIAL, AND BACKING.
2. OPERATION: FIXED.
3. TRIM: METAL FRAME AND TRAY, ANODIZED OR POWDER COATED FINISH.
B. TACKBOARDS:
1. MATERIALS: LINOLEUM.
2. OPERATION: FIXED.
3. TRIM: METAL FRAME AND TRAY, ANODIZED OR POWDER COATED FINISH.

PART 3 EXECUTION

3.1 INSTALLATION

A. TAKE FIELD MEASUREMENTS BEFORE FABRICATION WHERE POSSIBLE; DO NOT DELAY PROGRESS.
B. INSTALL MATERIALS AND SYSTEMS IN ACCORDANCE WITH MANUFACTURER'S INSTRUCTIONS AND APPROVED SUBMITTALS. INSTALL MATERIALS AND SYSTEMS IN PROPER RELATION WITH ADJACENT CONSTRUCTION AND WITH UNIFORM APPEARANCE. COORDINATE WITH WORK OF OTHER SECTIONS.
C. TOLERANCES: 1/16 INCH IN 20 FEET FROM TRUE PLUMB, LEVEL AND ALIGNMENT. LIMIT FLUSH VARIATION BETWEEN ADJACENT PANELS TO 1/16 INCH. PROVIDE TIGHT AND CLOSED GAPS BETWEEN PANELS UNLESS DETAILED OTHERWISE.
D. RESTORE DAMAGED FINISHES. CLEAN AND PROTECT WORK FROM DAMAGE.

**END OF SECTION**

**SECTION 10 14 00**

**SIGNAGE**

PART 1 GENERAL

1.1 SUMMARY

A. PROVIDE SIGNAGE, AS REQUIRED BY CODE.
1. REFER TO RESPONSIBILITY SCHEDULE ON DRAWINGS.

1.2 SUBMITTALS

A. PRODUCT DATA: SUBMIT MANUFACTURER'S PRODUCT DATA AND INSTALLATION INSTRUCTIONS FOR EACH MATERIAL AND PRODUCT USED.
B. SHOP DRAWINGS: SUBMIT SHOP DRAWINGS INDICATING MATERIAL CHARACTERISTICS, DETAILS OF CONSTRUCTION, CONNECTIONS, AND RELATIONSHIP WITH ADJACENT CONSTRUCTION.
C. SAMPLES: SUBMIT TWO REPRESENTATIVE SAMPLES OF EACH MATERIAL SPECIFIED INDICATING VISUAL CHARACTERISTICS AND FINISH.INCLUDE RANGE SAMPLES IF VARIATION OF FINISH IS ANTICIPATED.

1.3 QUALITY ASSURANCE

A. COMPLY WITH GOVERNING CODES AND REGULATIONS. PROVIDE PRODUCTS OF ACCEPTABLE MANUFACTURERS WHICH HAVE BEEN IN SATISFACTORY USE IN SIMILAR SERVICE FOR THREE YEARS. USE EXPERIENCED INSTALLERS. DELIVER, HANDLE, AND STORE MATERIALS IN ACCORDANCE WITH MANUFACTURER'S INSTRUCTIONS.

PART 2 PRODUCTS

2.1 MATERIALS

A. INTERIOR SIGNAGE:
1. TYPE: MATCH OWNER'S STANDARD.
2. COPY: RAISED LETTERING.
B. EXTERIOR SIGNAGE: PROVIDED BY OWNER'S SIGNAGE VENDOR

PART 3 EXECUTION

3.1 INSTALLATION

A. INSTALL MATERIALS AND SYSTEMS IN ACCORDANCE WITH MANUFACTURER'S INSTRUCTIONS AND APPROVED SUBMITTALS. INSTALL MATERIALS AND SYSTEMS IN PROPER RELATION WITH ADJACENT CONSTRUCTION AND WITH UNIFORM APPEARANCE. COORDINATE WITH WORK OF OTHER SECTIONS.
B. RESTORE DAMAGED FINISHES. CLEAN AND PROTECT WORK FROM DAMAGE.

**END OF SECTION**

**SECTION 10 21 10**

**TOILET COMPARTMENTS**

PART 1 GENERAL

1.1 SUMMARY

A. PROVIDE TOILET COMPARTMENTS AND SCREENS

1.2 SUBMITTALS

A. SUBMIT PRODUCT DATA, SAMPLES, SHOP DRAWINGS

1.3 QUALITY ASSURANCE

A. COMPLY WITH ADA AND LOCAL ACCESSIBILITY REQUIREMENTS

PART 2 PRODUCTS

2.1 MATERIALS

A. TOILET COMPARTMENT MATERIALS
1. SOLID PHENOLIC COMPARTMENTS: HIGH PRESSURE MELAMINE SURFACE FUSED TO SOLID PHENOLIC CORE
   a. BASIS OF DESIGN: BOBRICK COMPACT LAMINATE; REFER TO TOILET ACCESSORIES SCHEDULE FOR FINISH.
B. TYPE AND MOUNTING:
1. COMPARTMENTS: FLOOR-TO-CEILING HUNG
2. SCREENS: WALL HUNG
3. STYLE: STANDARD PRIVACY
C. ACCESSORIES:
a. HARDWARE: BRACKETS, HINGES, AND LATCHES
b. ROBE HOOKS AND BUMPERS ON BACK OF COMPARTMENT DOORS

PART 3 EXECUTION

3.1 INSTALLATION

A. INSTALL IN ACCORDANCE WITH MANUFACTURER'S INSTRUCTIONS AND APPROVED SUBMITTALS

**END OF SECTION**

**SECTION 10 26 10**

**CORNER GUARDS**

PART 1 GENERAL

1.1 SUMMARY

A. PROVIDE CORNER GUARDS

PART 2 PRODUCTS

2.1 MATERIALS

A. PRODUCTS: STAINLESS STEEL CORNER GUARDS, MECHANICALLY FASTENED WITH STAINLESS STEEL SCREWS

**END OF SECTION**

**SECTION 10 28 13**

**TOILET ACCESSORIES**

PART 1 GENERAL

1.1 SUMMARY

A. PROVIDE TOILET ACCESSORIES.

1.2 SUBMITTALS

A. PRODUCT DATA: SUBMIT MANUFACTURER'S PRODUCT DATA AND INSTALLATION INSTRUCTIONS FOR EACH MATERIAL AND PRODUCT USED.
B. SHOP DRAWINGS: SUBMIT SHOP DRAWINGS INDICATING MATERIAL CHARACTERISTICS, DETAILS OF CONSTRUCTION, CONNECTIONS, AND RELATIONSHIP WITH ADJACENT CONSTRUCTION.

1.3 QUALITY ASSURANCE

A. COMPLY WITH GOVERNING CODES AND REGULATIONS. PROVIDE PRODUCTS OF ACCEPTABLE MANUFACTURERS WHICH HAVE BEEN IN SATISFACTORY USE IN SIMILAR SERVICE FOR THREE YEARS. USE EXPERIENCED INSTALLERS. DELIVER, HANDLE, AND STORE MATERIALS IN ACCORDANCE WITH MANUFACTURER'S INSTRUCTIONS.

PART 2 PRODUCTS

2.1 MATERIALS

A. TOILET ACCESSORIES: REFER TO DRAWINGS FOR SCHEDULE.

PART 3 EXECUTION

3.1 INSTALLATION

A. INSTALL MATERIALS AND SYSTEMS IN ACCORDANCE WITH MANUFACTURER'S INSTRUCTIONS AND APPROVED SUBMITTALS. INSTALL MATERIALS AND SYSTEMS IN PROPER RELATION WITH ADJACENT CONSTRUCTION AND WITH UNIFORM APPEARANCE. COORDINATE WITH WORK OF OTHER SECTIONS.
B. RESTORE DAMAGED FINISHES AND TEST FOR PROPER OPERATION. CLEAN AND PROTECT WORK FROM DAMAGE.

**END OF SECTION**

**SECTION 10 44 00**

**FIRE PROTECTION SPECIALTIES**

PART 1 GENERAL

1.1 SUMMARY

A. PROVIDE FIRE EXTINGUISHERS, CABINETS AND ACCESSORIES.

1.2 SUBMITTALS

A. PRODUCT DATA: SUBMIT MANUFACTURER'S PRODUCT DATA AND INSTALLATION INSTRUCTIONS FOR EACH MATERIAL AND PRODUCT USED.
B. SHOP DRAWINGS: SUBMIT SHOP DRAWINGS INDICATING MATERIAL CHARACTERISTICS, DETAILS OF CONSTRUCTION, CONNECTIONS, AND RELATIONSHIP WITH ADJACENT CONSTRUCTION.

1.3 QUALITY ASSURANCE

A. COMPLY WITH GOVERNING CODES AND REGULATIONS. PROVIDE PRODUCTS OF ACCEPTABLE MANUFACTURERS WHICH HAVE BEEN IN SATISFACTORY USE IN SIMILAR SERVICE FOR THREE YEARS. USE EXPERIENCED INSTALLERS. DELIVER, HANDLE, AND STORE MATERIALS IN ACCORDANCE WITH MANUFACTURER'S INSTRUCTIONS.
B. STANDARDS: UL AND FM LISTED PRODUCTS, NFPA 10.
C. REGULATIONS: ADAAG.

PART 2 PRODUCTS

2.1 MATERIALS

A. FIRE EXTINGUISHERS:
1. MANUFACTURERS: J. L. INDUSTRIES; LARSEN'S MANUFACTURING; POTTER-ROEMER; OR APPROVED EQUAL.
2. TYPES AND RATINGS:
   a. MULTIPURPOSE DRY CHEMICAL TYPE, TYPE 2-A, UL-299, RATED FOR CLASS-A FIRES.
   b. DRY CHEMICAL: TYPE-K, UL-299, RATED FOR CLASS-B FIRES INVOLVING COMBUSTIBLE COOKING MEDIA.
   c. CARBON DIOXIDE: TYPE-C, LL-154, RATED FOR CLASS-C FIRES, FIRE EXTINGUISH SHALL CONTAIN AGENTS THAT ARE NONCONDUCTIVE TO ELECTRICITY.
3. PUBLIC AREA MOUNTING: CABINET MOUNTED.
4. SERVICE AREA MOUNTING: METAL BRACKETS.
B. FIRE EXTINGUISHER CABINETS:
1. MANUFACTURERS: J. L. INDUSTRIES; LARSEN'S MANUFACTURING; POTTER-ROEMER; OR APPROVED EQUAL.
   a BASIS OF DESIGN: J.L. INDUSTRIES; AMBASSADOR SERIES NO. 1015 S21 WITH HANDLE.
2. SIZE: 10-1/2 IN WIDE BY 24 IN HIGH BY 6 IN DEEP.
3. MOUNTING: RECESSED.
4. TRIM: FLAT.
5. DOORS: STAINLESS STEEL, NO. 4 FINISH.
6. DOOR STYLE: SOLID PANEL.
7. ACCESSORIES:
   a. FIRE HANDLE.
   b. SIGNAGE.
C. KEY VAULT BOX: PROVIDE AS REQUIRED BY LOCAL FIRE DEPARTMENT.
D. AED AND CABINET:
1 BASIS OF DESIGN: ZOLL.

PART 3 EXECUTION

3.1 INSTALLATION

A. INSTALL MATERIALS AND SYSTEMS IN ACCORDANCE WITH MANUFACTURER'S INSTRUCTIONS AND APPROVED SUBMITTALS. INSTALL MATERIALS AND SYSTEMS IN PROPER RELATION WITH ADJACENT CONSTRUCTION AND WITH UNIFORM APPEARANCE. COORDINATE WITH WORK OF OTHER SECTIONS.
B. INSTALL FIRE EXTINGUISHERS IN MECHANICAL AND SERVICE AREAS WITH WALL-HUNG BRACKETS AT LOCATIONS AND HEIGHTS INDICATED AND ACCEPTABLE TO AUTHORITIES HAVING JURISDICTION.
C. INSTALL FIRE EXTINGUISHERS IN CABINETS IN PUBLIC AREAS PLUMB AND LEVEL AT HEIGHTS ACCEPTABLE TO AUTHORITIES HAVING JURISDICTION.
D. RESTORE DAMAGED FINISHES. CLEAN AND PROTECT WORK FROM DAMAGE.

**END OF SECTION**

C:\Users\djevine\Documents\068_Shake Shack Lee's Summit_Central_djevine@bergmeyer.com.rvt

1/11/2021 6:08:55 PM

RELEASE FOR CONSTRUCTION
AS NOTED ON PLANS REVIEW
DEVELOPMENT SERVICES
LEE'S SUMMIT, MISSOURI
03/10/2021


Bergmeyer

BOS - 51 Sleeper St. 6th Floor Boston, MA 02210 617.542.1025

LA - 800 South Figueroa St. Suite 1060 Los Angeles, CA 90017 212.337.1090

www.bergmeyer.com


CONSULTANTS:

SEAL/ SIGNATURE:

| NO. | BY | DATE | DESCRIPTION |
|---|---|---|---|
| | | 2021-01-11 | PERMIT/BID SET |
| | | 2020-12-21 | 75% SET |

SHAKE SHACK

SHAKE SHACK - LEE'S SUMMIT MO

2051 NW LOWENSTEIN DRIVE
LEE'S SUMMIT, MISSOURI 64081
SHACK #1348

PERMIT/BID SET

ARCHITECTURAL SPECIFICATIONS

| | |
|---|---|
| DRAWN BY: | CS & WQL |
| CHECKED BY: | JS |
| JOB NO: | 20068.00 |

A705

# FOR REFERENCE ONLY

RELEASE FOR CONSTRUCTION
AS NOTED ON PLANS REVIEW
DEVELOPMENT SERVICES
LEE'S SUMMIT, MISSOURI
03/10/2021

Bergmeyer

BOS
51 Sleeper St.
6th Floor
Boston, MA 02210
617.542.1025

LA
800 South Figueroa St.
Suite 1060
Los Angeles, CA 90017
212.337.1090

www.bergmeyer.com

CONSULTANTS:

SEAL/ SIGNATURE:

| NO. | BY | DATE | DESCRIPTION |
|---|---|---|---|
| | | 2021-01-11 | PERMIT/BID SET |
| | | 2020-10-12 | DD SET |

SHAKE SHACK

SHAKE SHACK - LEE'S SUMMIT MO

2051 NW LOWENSTEIN DRIVE
LEE'S SUMMIT, MISSOURI 64081
SHACK #1348

PERMIT/BID SET

EXTERIOR RENDERINGS

| | |
|---|---|
| DRAWN BY: | CS & WQL |
| CHECKED BY: | JS |
| JOB NO: | 20068.00 |

A801

1/11/2021 6:08:57 PM C:\Users\jdevine\Documents\068_Shake Shack-Lee's Summit_Central_jdevine@bergmeyer.com.rvt

# FOR REFERENCE ONLY

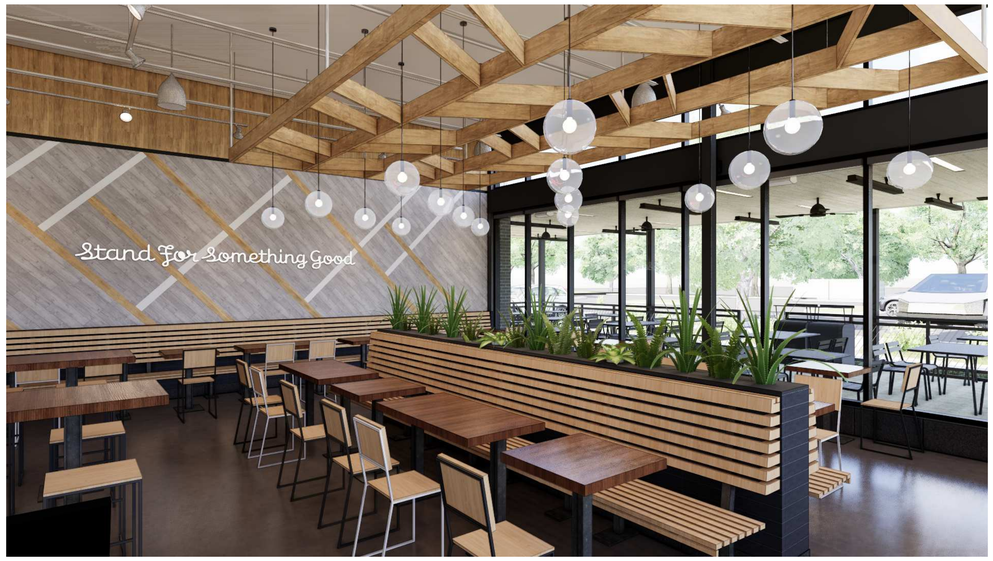


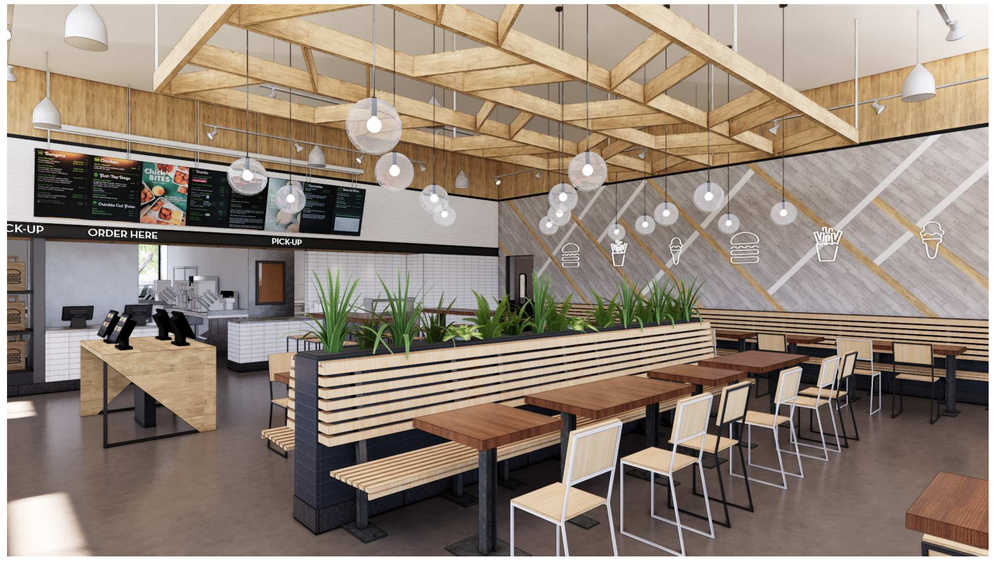


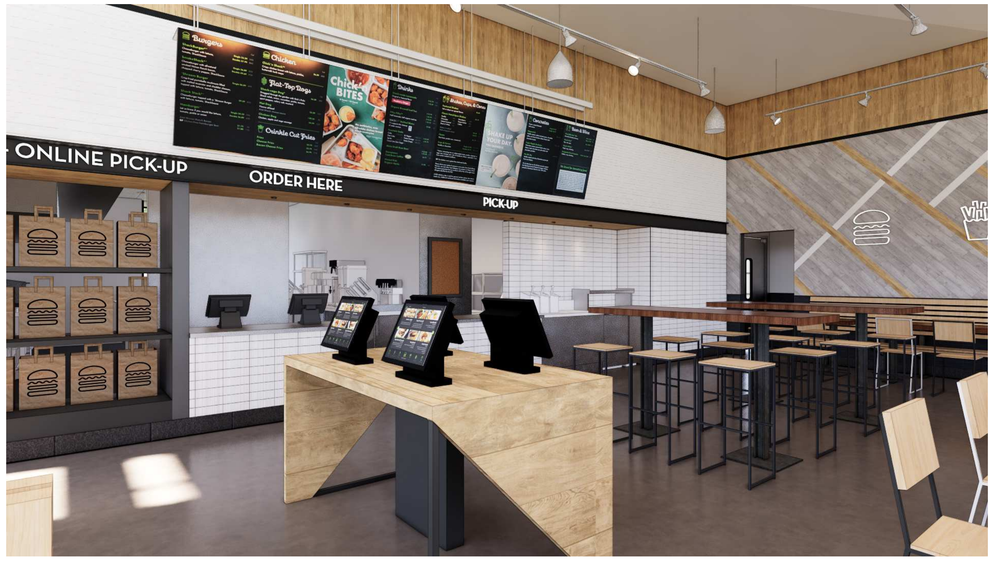


RELEASE FOR CONSTRUCTION
AS NOTED ON PLANS REVIEW
DEVELOPMENT SERVICES
LEE'S SUMMIT, MISSOURI
03/10/2021

Bergmeyer

BOS
51 Sleeper St.
6th Floor
Boston, MA 02210
617.542.1025

LA
800 South Figueroa St.
Suite 1060
Los Angeles, CA 90017
212.337.1090

www.bergmeyer.com

CONSULTANTS:

SEAL/ SIGNATURE:

| NO. | BY | DATE | DESCRIPTION |
|---|---|---|---|
| | | 2021-01-11 | PERMIT/BID SET |

SHAKE SHACK

SHAKE SHACK - LEE'S SUMMIT MO

2051 NW LOWENSTEIN DRIVE
LEE'S SUMMIT, MISSOURI 64081
SHACK #1348

PERMIT/BID SET

INTERIOR RENDERINGS

| | |
|---|---|
| DRAWN BY: | CS & WQL |
| CHECKED BY: | JS |
| JOB NO: | 20068.00 |

A802

1/11/2021 6:08:57 PM C:\Users\jdevine\Documents\068_Shake Shack-Lee's Summit_Central_jdevine@bergmeyer.com.rvt

## FOODSERVICE SHEET LIST


| NO. | SHEET NAME |
|---|---|
| QF102A | QF102A - FOODSERVICE UTILITY SCHEDULES |
| QF102B | FOOD SERVICE UTILITY SCHEDULES |
| GENERAL | |
| QF001 | FOODSERVICE GENERAL NOTES, LEGENDS, SHEET INDEX |
| EQUIPMENT PLANS | |
| QF101 | FOODSERVICE EQUIPMENT PLAN |
| QF102 | FOODSERVICE SCHEDULES |
| PLUMBING ROUGH-IN | |
| QF201 | FOODSERVICE PLUMBING IN-SLAB ROUGH-IN PLAN |
| QF202 | FOODSERVICE PLUMBING ABOVE SLAB ROUGH-IN PLAN |
| ELECTRICAL ROUGH-IN | |
| QF301 | FOODSERVICE ELECTRICAL ROUGH-IN PLAN |
| SPECIAL CONDITIONS | |
| QF401 | FOODSERVICE SPECIAL CONDITIONS PLAN |
| QF402 | NOT USED |
| QF403 | NOT USED |
| QF404 | NOT USED |
| QF405 | NOT USED |
| DETAILS AND ELEVATIONS | |
| QF501 | FOODSERVICE ELEVATIONS |
| QF502 | NOT USED |
| QF601 | NOT USED |
| QF602 | NOT USED |
| VENDOR/CUSTOM | |
| QF700 | NOT USED |
| BIM SYSTEMS COORDINATION | |
| QF800 | NOT USED |


## GENERAL CONTRACTOR REQUIREMENTS (DIVISION 3, 6, 7, & 9)

1 GENERAL CONTRACTOR, ARCHITECT, ENGINEER(S), AND/OR OWNER SHALL NOTIFY THE KEC (SECTION 114000) OF ALL ADDENDUMS, BULLETINS, AND CHANGES TO THE BUILDING SPACE WITHIN AND AROUND ANY FOODSERVICE AREA(S) PRIOR TO CONSTRUCTION.
2 GENERAL CONTRACTOR AND/OR SUBDIVISIONS SHALL NOTIFY THE KEC (SECTION 114000) OF ANY DISCREPANCY BETWEEN DRAWINGS, CONSTRUCTION, AND CODE REQUIREMENTS WITH POTENTIAL IMPACT.
3 GENERAL CONTRACTOR AND/OR SUBDIVISIONS SHALL PROVIDE ACCESS AND PATH OF DELIVERY FOR FOODSERVICE EQUIPMENT TO FINAL LOCATION. COORDINATE REQUIREMENTS WITH KEC (SECTION 114000).
4 GENERAL CONTRACTOR AND/OR SUBDIVISIONS SHALL PROVIDE OPENINGS THRU FLOORS, CEILINGS, WALLS, AND ROOFS FOR UTILITY ACCESS, CONDUIT, RISERS, AND DUCTWORK UNLESS SPECIFIED OTHERWISE. OPENINGS SHALL BE DRILLED, CORE-BORED, OR CUT BYAN APPROVED METHOD.
5 GENERAL CONTRACTOR AND/OR SUBDIVISIONS SHALL PROVIDE FIRESTOP AT ALL FIRE-RATED BUILDING PENETRATIONS, SHAFTS, AND ASSEMBLIES AS DIRECTED BY CODE UNLESS SPECIFIED OTHERWISE.
6 GENERAL CONTRACTOR AND/OR SUBDIVISIONS SHALL PROVIDE ACCESS PANELS IN HARD LID CEILINGS FOR ACCESS TO EXHAUST CLEANOUTS, FIRE SUPPRESSION GAS VALVES, PULL BOXES, ETC.
7 GENERAL CONTRACTOR AND/OR SUBDIVISIONS SHALL FURNISH AND INSTALL WALL BLOCKING WHERE WALLS REQUIRE REINFORCEMENT. LENGTHS OF WALL BLOCKING ARE NOMINAL: ALWAYS EXTEND TO THE NEXT STUD IN EACH DIRECTION.
8 GENERAL CONTRACTOR AND/OR SUBDIVISIONS SHALL VERIFY & PROVIDE STRUCTURAL REINFORCEMENT TO BUILDING AS REQ'D FOR HANGING AND/OR MOUNTING OF KEC (SECTION 114000) FURNISHED EQUIPMENT. COORDINATE EQUIPMENT LOCATION(S) WITH KEC (SECTION 114000)
9 GENERAL CONTRACTOR AND/OR SUBDIVISIONS SHALL PROVIDE ADDITIONAL ROOF BRACING AND STRUCTURAL SUPPORT AS REQ'D FOR KEC (SECTION 114000) FURNISHED ROOFTOP REFRIGERATION UNITS, EXHAUST/MAKE-UP AIR FANS, ETC.
10 GENERAL CONTRACTOR AND/OR SUBDIVISIONS SHALL PROVIDE TRAPEZE HANGING SUPPORT FROM BUILDING STRUCTURE TO WITHIN 6'-0" ABOVE ALL EXHAUST HOOD(S) WHERE REQ'D.
11 GENERAL CONTRACTOR AND/OR SUBDIVISIONS SHALL PROVIDE FIRE-RATED SHAFTS AND DUCT WRAP IN ACCORDANCE WITH CODE UNLESS SPECIFIED OTHERWISE.
12 GENERAL CONTRACTOR AND/OR SUBDIVISIONS SHALL PROVIDE NON-COMBUSTIBLE WALL CONSTRUCTION OF MINIMUM 16 GA. METAL STUDS WITHIN 18" OF EXHAUST HOOD(S) OR AS DIRECTED BY THE AUTHORITIES HAVING JURISDICTION.
13 GENERAL CONTRACTOR AND/OR SUBDIVISIONS SHALL PROVIDE SPRINKLER PROTECTION IN WALK-IN REFRIGERATION UNITS AS REQ'D BY CODE. FOAM & SEAL INSIDE & OUTSIDE OF PENETRATION(S) THRU WALK-IN AND PROTECT SPRINKLER SYSTEM AGAINST FREEZING.
14 GENERAL CONTRACTOR AND/OR SUBDIVISIONS SHALL PROVIDE FIRE EXTINGUISHERS AS REQ'D BY CODE UNLESS SPECIFIED AS FURNISHED BY KEC (SECTION 114000)
15 GENERAL CONTRACTOR AND/OR SUBDIVISIONS SHALL PROVIDE SMOOTH CONCRETE SLAB FOR TRASH AND DUMPSTER AREA(S) AS LOCATED BY THE ARCHITECTURAL DRAWINGS.

## FOODSERVICE ABBREVIATIONS (SECTION 114000)

| | | | |
|---|---|---|---|
| AFF | ABOVE FINISHED FLOOR | INST | INSTALL(ATION) |
| ALT | ALTERNATE | INSUL | INSULATE(ION) |
| AMP | AMPERE | INT | INTERIOR |
| ANSI | AMERICAN NATIONAL STANDARDS INSTITUTE | IW | INDIRECT WASTE |
| BLDG | BUILDING | JB | JUNCTION BOX |
| BTC | BRANCH TO CONNECTION | JBH | JUNCTION BOX - CEILING/HORIZONTAL MOUNTED |
| BTU | BRITISH THERMAL UNIT | JBW | JUNCTION BOX - WALL MOUNTED |
| C&P | CORD AND PLUG | KEC | KITCHEN EQUIPMENT CONTRACTOR |
| CFM | CUBIC FEET PER MINUTE | KW | KILOWATT HOUR |
| CL | CENTER LINE | LAM | LAMINATE |
| CLG | CEILING | LBS | POUNDS |
| CLR | COOLER | LT | LIGHT |
| CMU | CONCRETE MASONRY UNIT | MBTU | 1000 BTU/HOUR |
| CO | CONVENIENCE OUTLET | MECH | MECHANICAL |
| COL | COLUMN | MTD | MOUNTED |
| CW | COLD WATER | MTP | MALE PIPE THREAD |
| DC | DROP CORD | N/A | NOT APPLICABLE |
| DFA | DOWN FROM ABOVE | NIC | NOT IN CONTRACT |
| DIA | DIAMETER | NTS | NOT TO SCALE |
| DIM | DIMENSION | OC | ON CENTER |
| DIV | DIVISION | OD | OUTSIDE DIAMETER |
| DR | DUPLEX RECEPTACLE | PC | PLUMBING CONTRACTOR |
| DW | DIRECT WASTE | PERF | PERFORATE(D) |
| DWG | DRAWING | PH | PHASE |
| EA | EACH | PLAM | PLASTIC LAMINATE |
| EC | ELECTRICAL CONTRACTOR | PLYWD | PLYWOOD |
| EQ | EQUAL | PSI | POUNDS PER SQUARE INCH |
| EQUIP | EQUIPMENT | QR | QUAD RECEPTACLE |
| EXT | EXTERIOR | QT | QUARRY TILE |
| FD | FLOOR DRAIN | QTY | QUANTITY |
| FF | FINISHED FLOOR | RAD | RADIUS |
| FIN | FINISH(ED) | RCP | REFLECTED CEILING PLAN |
| FLR | FLOOR | REQD | REQUIRED |
| FLUOR | FLUORESCENT | RFG | REFRIGERATOR |
| FPT | FEMALE PIPE THREAD | RI | ROUGH-IN |
| FRZ | FREEZER | RM | ROOM |
| FW | FILTERED WATER | SP | SPECIAL RECEPTACLE |
| GA | GAUGE | SPEC | SPECIFICATION |
| GAL | GALLON | SR | SINGLE RECEPTACLE |
| GALV | GALVANIZED | SS | STAINLESS STEEL |
| GC | GENERAL CONTRACTOR | STD | STANDARD |
| GFCI | GROUND FAULT CIRCUIT INTERUPTER | STP | STATIC PRESSURE |
| GPM | GALLONS PER MINUTE | TYP | TYPICAL |
| HGT | HEIGHT | UDS | UTILITY DISTRIBUTION SYSTEM |
| HORZ | HORIZONTAL | VAC | VACUUM |
| HP | HORSEPOWER | VERT | VERTICAL |
| HVAC | HEATING, VENTILATING, AIR CONDITIONING | WH | WATER HEATER |
| HW | HOT WATER | WL | WALL |
| ID | INSIDE DIAMETER | WP | WEATHER PROOF |
| IN | INCH | | |
| INCL | INCLUDE | | |

## CUSTOM FABRICATION GENERAL REQUIREMENTS

1. THESE NOTES APPLY TO ITEMS LISTED AS “CUSTOM” FABRICATION AND DO NOT APPLY TO STAINLESS STEEL FABRICATION WITH A MANUFACTURER/BRAND AND MODEL NUMBER.
2. STAINLESS STEEL SHALL BE 18-8, TYPE 304 UNLESS NOTED OTHERWISE.
3. COUNTERTOPS AND SINKS SHALL BE 14 GAUGE UNLESS NOTED OTHERWISE.
4. UNDERSHELVES AND OVERSHELVES SHALL BE 18 GAUGE UNLESS NOTED OTHERWISE.
5. ENCLOSED CABINET BASES SHALL BE 18 GAUGE. DOORS SHALL BE DOUBLE WALL CONSTRUCTION WITH 18 GAUGE EXTERIOR.
6. LEGS SHALL BE 16 GAUGE, 1-5/8” O.D. TUBING WITH STAINLESS STEEL BULLET SHAPED FEET. CROSS-RAILS SHALL BE 16 GAUGE, 1-1/4” O.D. TUBING. ALL JOINTS BETWEEN LEGS, CROSS BRACES, AND UNDERSHELVES TO BE FULLY WELDED, GROUND, AND POLISHED SMOOTH. SPACING BETWEEN LEGS NOT TO EXCEED 5'-0” O.C.
7. REINFORCE TOPS, SHELVES, AND CABINET BASES WITH 12 GAUGE CHANNEL: ONE CENTER CHANNEL UP TO 36” WIDE AND TWO CHANNELS WHEN OVER 36” WIDE. CHANNEL SHALL BE STAINLESS STEEL IN WET AREAS AND WHERE EXPOSED.

## GENERAL FOOD SERVICE AND HEALTH CODE REQUIREMENTS

1 FOODSERVICE EQUIPMENT AND INSTALLATION SHALL COMPLY WITH THE CURRENT EDITION OF CODES, RULES, AND REGULATIONS OF THE GOVERNING HEALTH DEPARTMENT AUTHORITIES AND SHALL BE MANUFACTURED IN STRICT COMPLIANCE WITH AND, IF APPLICABLE, BEAR THE SEAL OF UL, NEMA, ASME, NSF, ETL, AGA, OSHA AND NFPA.
2 CEILING AND WALL SURFACES ADJACENT TO OR ABOVE ANY FOOD PREPARATION AREA, INCLUDING KITCHEN, DISHWASHING, AND SERVING AREAS, ETC., SHALL BE SMOOTH, NON-ABSORBANT, EASILY CLEANABLE, AND LIGHT IN COLOR. ANY MATERIALS NOT CLEARLY CONSISTENT WITH THIS REQUIREMENT SHOULD BE SUBMITTED TO THE LOCAL HEALTH JURISDICTION FOR PRIOR APPROVAL OF USE. LAY-IN CEILING TILE MUST BE NON-POROUS AND NON-FISSURED PANELS ONLY. A CORROSION RESISTANT SUSPENSION SYSTEM IS RECOMMENDED.
3 FLOORING IN ANY FOODSERVICE AREA, RESTROOM, AND ANTE-ROOM SHALL BE SMOOTH, NON-ABSORBENT, AND EASILY CLEANABLE WITH MINIMUM 3/8" COVE BASE EXTENDING UPWARD MINIMUM 6" AT WALLS OR AS DIRECTED BY THE GOVERNING HEALTH DEPARTMENT.
4 BUILDING SURFACES AT AND AROUND FOODSERVICE COUNTERS IN PUBLIC SERVING AREAS SHALL MEET THE FINISH REQUIREMENTS OF THE GOVERNING HEALTH DEPARTMENT.
5 CONSTRUCT PARTITION WALLS BETWEEN FOODSERVICE AREAS AND PUBLIC AREAS FOR MAXIMUM SOUND CONTROL WHERE APPLICABLE.
6 LIGHTING IN FOODSERVICE AREAS SHALL MEET THE MINIMUM FOOT-CANDLE REQUIREMENTS ESTABLISHED BY THE AUTHORITIES HAVING JURISDICTION.
7 LIGHTING AND INFRARED/HEAT LAMPS IN AREAS OVER FOOD CONTACT SHALL HAVE LAMP GUARDS/SLEEVES, SOLID PLASTIC LENSES, OR APPROVED SHATTER RESISTANT COATED BULBS.
8 BACKSPLASHES, WHEN PROVIDED WITH EQUIPMENT, SHALL BE SEALED TO WALLS WITH SILICONE SEALANT IN A NEAT WORKMANLIKE MANNER. SEALANT MUST BE APPROVED BY THE NATIONAL SANITATION FOUNDATION (NSF).
9 SEAMS AND GAPS BETWEEN NON-PORTABLE FOODSERVICE EQUIPMENT AND ADJACENT STRUCTURES SHALL BE PROPERLY SEALED AGAINST THE ENTRANCE OF FOOD PARTICULATES AND VERMIN WITH NSF APPROVED SILICONE SEALANT AND/OR TRIM.
10 EQUIPMENT PLACED ON TABLES AND COUNTERS SHALL BE COMPLETELY SEALED TO WORK SURFACE OR MOUNTED ON LEGS NO LESS THAN 4 INCHES IN HEIGHT IF EQUIPMENT WEIGHS MORE THAN 75 POUNDS.
11 ALL FOODSERVICE EQUIPMENT RESTING ON THE FLOOR SHALL BE COMPLETELY SEALED TO FLOOR, MOUNTED ON MIMUM 6" HIGH LEGS, MOUNTED ON CASTERS, INSTALLED ON A RAISED CURB WITH COVED BASE, OR INSTALLED AS DIRECTED BY THE GOVERNING HEALTH DEPARTMENT.
12 EMPLOYEE LOCKERS SHALL HAVE MINIMUM 6" HIGH ROUND METAL LEGS OR MOUNTED TO THE WALL WITH MINIMUM 6" AFF CLEAR.
13 UNDERBAR SINKS SHALL COMPLY WITH THE REQUIREMENTS OF THE GOVERNING HEALTH DEPARTMENT.
14 WAREWASH SINKS SHALL HAVE THREE COMPARTMENTS SIZED TO SUBMERGE THE LARGEST KITCHEN VESSEL AND MINIMUM 18" DRAINBOARD ON BOTH ENDS. SPLASHGUARDS SHALL BE PROVIDED AS REQUIRED BY THE GOVERNING HEALTH DEPARTMENT.
15 DISHWASHERS SHALL BE CHEMICAL OR HIGH TEMPERATURE SANITIZING. HIGH TEMPERATURE MACHINES MUST BE DESIGNED WITH A FINAL RINSE TEMPERATURE OF 180°F AND WASH CYCLE TEMPERATURE OF 160°F.
16 ALL REFRIGERATION EQUIPMENT SHALL HAVE THERMOMETERS WHICH ARE EASILY READABLE, IN PROPER WORKING CONDITION, AND ACCURATE WITHIN A RANGE OF PLUS OR MINUS 2°.
17 VACCUUM BREAKERS, WHEN REQUIRED, SHALL BE A MINIMUM OF 6 INCHES ABOVE THE FLOOD LEVEL RIM WITH NO SHUT OFF DEVICES BEYOND THE DISCHARGE OF THE VACUUM BREAKER.
18 WATER FILTRATION DEVICES SHALL NOT BE LOCATED DIRECTLY ABOVE FOODSERVICE EQUIPMENT OR FIXTURES WHERE DIRECTED BY AUTHORITIES HAVING JURISDICTION.
19 DEDICATED HANDWASHING FACILITIES SHALL BE LOCATED WITHIN REQUIRED PROXIMITY AND ACCESSIBILITY OF ALL FOODSERVICE AREAS.
20 UTILITY FAUCETS AT MOP SINK(S) SHALL HAVE BACKFLOW PROTECTION AND SHALL BE THREADED FOR HOSE ATTACHMENT. CHEMICAL DISPENSING SYSTEMS SHALL NOT BE PLUMBED TO THE FAUCET.
21 AIR CURTAIN(S) SHALL HAVE MINIMUM 1600 CFM VELOCITY MEASURED 3'-0" AFF AND SHALL OPERATE VIA DOOR ACTIVATED MICROSWITCH.

## FLOOR CURB AND DEPRESSION GENERAL REQUIREMENTS (DIVISION 3, 6, 7, & 9)

1. GENERAL CONTRACTOR AND/OR SUBDIVISIONS SHALL PROVIDE RECESS(ES) AND RAISED CONCRETE CURB(S) AS SPECIIFIED.
2. FLOOR SLAB RECESS(ES) AND RAISED CONCRETE CURB(S) MUST BE SMOOTH AND LEVEL WITHIN PLUS OR MINUS 1/8".
3. DIMENSIONS ARE SHOWN FROM FINISHED FLOORS, FINISHED WALLS, AND/OR COLUMN CENTERLINES TO FINISHED EDGE OF RAISED CURB AND/OR FLOOR RECESS. HEIGHTS ARE SHOWN FROM FINISHED FLOOR TO FINISHED SURFACE OF RAISED CURB AND/OR FLOOR RECESS.
4 OFFSET CURB 3" MINIMUM AROUND PERIMETER OF FLOOR SINKS WHEN SHOWN WITHIN RAISED CURB(S).
5 GENERAL CONTRACTOR AND/OR SUBDIVISIONS SHALL BACKFILL FLOOR RECESS(ES) AND EXPOSED OPENINGS IN CONCRETE CURBS UPON INSTALLATION OF FOODSERVICE EQUIPMENT.
6 KEC (SECTION 114000) SHALL CONFIRM RAISED CURB FRAMING PRIOR TO POURING OF CONCRETE BY GENERAL CONTRACTOR AND/OR SUBDIVISIONS.
7 GENERAL CONTRACTOR AND/OR SUBDIVISIONS TO FURNISH AND INSTALL INTEGRAL COVE BASE ON RAISED CONCRETE CURB(S) PRIOR TO INSTALLATION OF FOODSERVICE EQUIPMENT.
8 KEC (SECTION 114000) TO PROVIDE MINIMUM 1/2" BORIC ACID IN ENCLOSED CURBS OF FRAME CONSTRUCTION FOR VERMIN CONTROL OR AS ACCEPTABLE BY THE AUTHORITIES HAVING JURISDICTION.

## REFRIGERATION GENERAL REQUIREMENTS

1 GENERAL CONTRACTOR AND/OR SUBDIVISIONS SHALL PROVIDE FLOOR REQUIREMENTS AND/OR SLAB RECESS(ES) AAT WALK-IN COOLERS AND FREEZER AS SPECIFIED.
2 EVAPORATOR CONDENSATE DRAIN LINE (S) SHALL BE REFRIGERATION GRADE HARD COPPER USING 1" STANDOFFS. "P" TRAP DRAIN OUTSIDE WALK-IN COMPARTMENT(S). PROVIDE AND INSTALL SLEEVES THRU WALK-IN AND BUILDING WALLS FOR DRAIN LINE (S). FOAM & CAULK AROUND SLEEVES AND DRAIN LINES. WRAP WITH DRAIN LINE HEATER AND INSULATION WHERE SUBJECT TO FREEZING TEMPERATURES.
3 KEC (SECTION 114000) SHALL FURNISH AND INSTALL METAL CLOSURE PANELS & TRIM TO MATCH WALK-IN FACING WHERE WALK-IN ABUTS BUILDING WALLS AND CEILINGS.
4 BUILDING FLOOR UNDER WALK-IN MUST BE SMOOTH AND LEVEL WITHIN PLUS OR MINUS 1/8"
5 REFRIGERATION CONTRACTOR SHALL VERIFY LOCATION OF CONDENSING UNIT(S) PRIOR TO INSTALLATION.
6 INDOOR RACK SYSTEMS SHALL REQUIRE MECHANICAL VENTILATION OF NOT LESS THAN 800 CFM PER H.P. FOR AIR-COOLED UNITS AND 250 CFM PER H.P. FOR WATER-COOLED UNITS UNLESS DIRECTED OTHERWISE BY MANUFACTURER'S RECOMMENDATIONS.
7 GENERAL CONTRACTOR AND/OR SUBDIVISIONS TO COORDINATE CLEARANCE REUIREMENTS OF ROOFTOP REFRIGERATION UNIT(S) FROM BUILDING EDGES AND OTHER ROOFTOP MECHANICAL UNITS AS DIRECTED BY CODE.
8 GENERAL CONTRACTOR AND/OR SUBDIVISIONS SHALL PROVIDE STRUCTURAL REINFORCEMENT TO BUILDING AS REQUIRED FOR HANGING AND/OR MOUNTING OF REFRIGERATION EQUIPMENT. COORDINATE EQUIPMENT LOCATION(S) WITH REFRIGERATION CONTRACTOR.
9 ALL ROOF MATERIAL/FLASHING AND REQUIRED ROOF PENETRATION(S) FOR REFRIGERATION SYSTEMS ARE THE RESPONSIBILITY OF THE GENERAL CONTRACTOR AND/OR SUBDIVISIONS.
10 REFRIGERATION CONTRACTOR SHALL PITCH OR SEAL PENETRATIONS THRU PIPE CURB(S) WITH TAR UPON INSTALLATION OF REFRIGERATION LINES.
11 REFRIGERATION CONTRACTOR SHALL FURNISH REFRIGERATION PIPING AND INSTALL CONDENSERS, CONDENSING UNITS, AND EVAPORATOR COILS. REFRIGERATION CONTRACTOR TO CHARGE, START-UP, RUN, AND CHECK FOR OPERATING TEMPERATURES.
12 REFRIGERATION CONTRACTOR SHALL FURNISH AND INSTALL FLEXIBLE CLOSED CELL INSULATION ON REFRIGERATION LINES TO PREVENT CONDENSATION
13 GENERAL CONTRACTOR AND/OR SUBDIVISIONS SHALL COORDINATE ACCESSIBILITY OF REFRIGERATION PIPING TO CONDENSING UNITS (THRU MULTIPLE FLOORS WHERE REQ'D) WITH REFRIGERATION CONTRACTOR.
14 REFRIGERATION LINES TO BE CONCEALED WITHIN WALLS, ABOVE CEILINGS, AND BENEATH FLOORS WHERE POSSIBLE. REFRIGERATION CONTRACTOR TO INSTALL LINE SETS IN WALLS DURING FRAMING.
15 REFRIGERATION CONTRACTOR SHALL FOAM & SEAL INSIDE & OUTSIDE OF ALL REFRIGERATION PENETRATIONS THRU WALK-IN COOLER/FREEZER(S) AND REMOTE REFRIGERATION UNITS.
16 REFRIGERATION CONTRACTOR SHALL FOAM AND SEAL BOTH ENDS OF CONDUIT (WHERE SPECIFIED) UPON INSTALLATION OF REFRIGERATION LINES.
17 PULL BOXES FOR REFRIGERATION LINES (WHERE SPECIFIED) SHALL BE MINIMUM 12" X 12".
18 KEC (SECTION 114000) FURNISHED REMOTE CONDENSERS/CONDENSING UNITS FOR ICE MACHINES SHALL BE INSTALLED NO FURTHER THAN 75'-0" FROM UNIT OR WITHING MANUFACTURER'S RECOMMENDED MAXIMUM DISTANCE.
19 REFRIGERATION CONTRACTOR SHALL INSTALL REFRIGERATION LINE SETS FOR ICE MACHINES.

## VENTILATION GENERAL REQUIREMENTS

1. MECHANICAL EXHUAST SYSTEMS SHALL BE PROVIDED ABOVE ALL COOKING EQUIPMENT AND DISHWASHERS AS DIRECTED BY THE AUTHORITIES HAVING JURISDICTION.
2. EXHAUST HOODS SHALL BE CONSTRUCTED IN ACCORDANCE WITH LOCAL BUILDING CODES AND MEET NSF, UL, AND NFPA-96 STANDARDS. HOODS ARE TO BEAR UL CLASSIFIED LABEL WITHOUT DAMPERS IN EXHAUST VENT OLLARS. HOODS SHALL BE DESIGNED WITH A MINIMUM 6INCH OVERHANG AT ALL EXPOSED COOKING AREAS.
3. MAKE-UP AIR MUST BE PROVIDED FOR MECHANICAL EXHAUST SYSTEMS AS REQ'D BY THE AUTHORITIES HAVING JURISDICTION. MAKE-UP AIR SHALL NOT CAUSE UNDUE TURBULENCE IN WORKING AREAS.
4. HVAC/MECHANICAL CONTRACTOR (DIVISION 23) TO COORDINATE LOCATIONS OF EXHAUST AND MAKE-UP AIR DUCT(S) WITH THE KEC (SECTION 114000)
5. EXHAUST DUCT IN ENCLOSED EXHAUST SHAFTS SHALL BE WRAPPED WITH APPROVED DUCT INSULATION OR SHALL MEET THE MINIMUM FIRE RATING AND CLEARANCE REQUIREMENTS TO COMBUSTIBLE AND NONCOMBUSTIBLE CONSTRUCTION AS DIRECTED BY CODE.
6. GENERAL CONTRACTOR AND/OR SUBDIVISIONS SHALL FLASH-IN ALL ROOF CURBS FOR EXHAUST/MAKE-UP AIR FAN(S).
7. THE EXHAUST HOODS AND EXHAUST DUCT SYSTEMS SHALL BE PROVIDED WITH AN AUTOMATIC FIRE EXTINGUISHING SYSTEM. THE FIRE SUPPRESSION SYSTEM SHALL BE ENGINEERED, SIZED, AND INSTALLED IN ACCORDANCE WITH UL 300, NFPA AND CODE.

## PLUMBING GENERAL REQUIREMENTS (DIVISION 22)

1 FOODSERVICE DRAWINGS INDICATE PLUMBING ROUGH-IN/CONNECTION POINTS ONLY FOR EQUIPMENT SPECIFIED UNDER THE KITCHEN EQUIPMENT (SECTION 114000) CONTRACT. ANY ADDITIONAL PLUMBING REQUIREMENTS ARE NOT INDICATED ON FOODSERVICE DRAWINGS. THE PLUMBING CONTRACTOR (DIVISION 22) SHALL FURNISH AND INSTALL PRESSURE REDUCING VALVES, FLOW CONTROLS, BACK FLOW PREVENTION, RPZ (REDUCED PRESSURE ZONE) VALVES, WATER HAMMER ARRESTOR, GATE VALVES, FOR WATER CONNECTIONS AS REQUIRED PER LOCAL CODES.
2 DIMENSIONS ARE SHOWN FROM FINISHED FLOORS, FINISHED WALLS, AND/OR COLUMN CENTERLINES TO CENTER OF ROUGH-IN.
3 ROUGH-INS, FIELD INTERCONNECTIONS, AND FINAL CONNECTIONS TO ALL FOODSERVICE EQUIPMENT SHALL BE COMPLETED BY PLUMBING CONTRACTOR (DIVISION 22).
4 PLUMBING TO BE CONCEALED WITHIN WALLS, CEILINGS, AND FLOORS WHERE POSSIBLE.
5 REUSE PLUMBING SERVICES WHERE APPLICABLE IN EXISTING/REMODELED FOODSERVICE AREAS. CAP OR REMOVE EXISTING SERVICE(S) MADE OBSOLETE BY NEW CONSTRUCTION AS DIRECTED BY CODE.
6 DIRECT AND INDIRECT WASTES ARE INDICATED IN FOODSERVICE AREAS. ADDITIONAL DRAINS MAY BE REQUIRED UNDER DIVISION 22.
7 FLOOR SINKS SHALL BE FLUSH WITH FINISH FLOOR UNLESS DIRECTED OTHERWISE BY THE AUTHORITIES HAVING JURISDICTION.
8 PROVIDE REMOVABLE GRATES OR COVERS ON PARTIALLY AND FULLY EXPOSED FLOOR SINKS.
9 FLOOR SINKS FOR DISHWASHERS, SCULLERY SINKS, AND WATER-WASH HOODS TO BE A MINIMUM 10" DEEP WITH 3" DRAIN WHERE APPLICABLE.
10 PROVIDE AND ROUTE DRAIN LINES FROM EQUIPMENT TO FLOOR SINKS WITH A MINIMUM 1/4" PER 1'-0" SLOPE. INSULATE DRAIN LINES SUSCEPTIBLE TO CENDENSATION (ICE BINS, REFRIGERATION UNITS, ETC).
11 SUPPORT ALL SUPPLY AND DRAIN LINES TIGHT AGAINST UNDERSIDE OF EQUIPMENT TO ALLOW SPACE FOR CLEANING.
12 KEC (SECTION 114000) SHALL FURNISH ALL FAUCETS, BASKET WASTES, TWIST/LEVER WASTES, GAS HOSES, AND VACUUM BREAKER/SAFETY REGULATORS AS SPECIFIED. PLUMBING CONTRACTOR (DIVISION 22) SHALL INSTALL ALL FAUCETS, BASKET WASTES, TWIST/LEVER WASTES, GAS HOSES, AND VACUUM BREAKER/SAFETY REGULATORS WITH THE NECESSARY COMPONENTS AND SUPPLY NIPPLES TO MAKE FINAL CONNECTIONS; INCLUDING THE INSTALLATION OF COMPONENTS NOT SHOWN OR SHIPPED LOOSE.
13 FLOOR AND WALL PENETRATIONS MUST BE SEALED WATER-TIGHT AND VERMIN PROOF.
14 FOODSERVICE EQUIPMENT DRAIN(S) ARE TO BE PIPED TO THE GREASE TRAP/INCEPTOR PROVIDED BY THE PLUMBING CONTRACTOR (DIVISION 22) AS DIRECTED BY AUTHORITIES HAVING JURISDICTION.
15 POTABLE WATER PRESSURE TO FOODSERVICE EQUIPMENT SHALL MEET THE REQUIREMENTS OF THE AUTHORITIES HAVING JURISDICTION.
16 INCOMING GAS PRESSURE AT POINTS OF USE MUST MEET MANUFACTURER’S SPECIFIED WATER COLUMN REQUIREMENTS. INSTALL KEC (SECTION 114000) FURNISHED PRESSURE REGULATORS WHEN SHIPPED LOOSE WITH EQUIPMENT.
17 WATER HEATER(S) SHALL BE SIZED BY THE PLUMBING ENGINEER TO MEET THE CONSUMPTION REQUIREMENTS OF THE AUTHORITIES HAVING JURISDICTION.
18 PROVIDE 120 DEGREE F HOT WATER SUPPLY AT THREE-COMPARTMENT SINK(S).
19 UNLESS SPECIFIED AS FURNISHED BY KEC (SECTION 114000), PLUMBING CONTRACTOR (DIVISION 26) SHALL FURNISH AND INSTALL TEMPERATURE REDUCING DEVICES ON DRAIN LINES WHERE DISCHARGE WATER EXCEEDS MAXIMUM ALLOWABLE TEMPERATURE AS DIRECTED BY THE AUTHORITIES HAVING JURISDICTION.
20 ALL STEAM AND CONDENSATE CONNECTIONS SHALL BE INSTALLED AS DIRECTED BY CODE. PROVIDE PRESSURE REDUCING VALVES, STEAM TRAPS, SAFETY VALVES, SHUT-OFF VALVES, STRAINERS, WRAP, AND INSULATION AS REQ’D.

## VENTILATION REQUIREMENTS

1A. KEC (SECTION 114000) SHALL FURNISH AND INSTALL ALL EXHAUST HOODS. HVAC/MECHANICAL CONTRACTOR (DIVISION 23) SHALL FURNISH AND INSTALL EXHAUST/SUPPLY FAN(S), CURBS, AND DUCTWORK UPSTREAM FROM EXHAUST HOOD COLLARS. FINAL CONNECTION TO EXHAUST HOOD COLLARS BY HVAC/MECHANICAL CONTRACTOR (DIVISION 23).
1B. HVAC/MECHANICAL CONTRACTOR (DIVISION 23) SHALL INSTALL KEC (SECTION 114000) FURNISHED HOODS, EXHAUST/SUPPLY FAN(S), AND CURBS. FURNISH AND INSTALL DUCTWORK UPSTREAM FROM EXHAUST HOOD COLLARS.
1C. HVAC/MECHANICAL CONTRACTOR (DIVISION 23) SHALL FURNISH AND INSTALL EXHAUST HOODS, EXHAUST/SUPPLY FAN(S), CURBS, AND DUCTWORK.
1D. KEC (SECTION 114000) SHALL FURNISH AND INSTALL EXHAUST HOODS, EXHAUST/SUPPLY FAN(S), CURBS, AND DUCTWORK.
1E. KEC (SECTION 114000) SHALL FURNISH AND INSTALL EXHAUST HOODS, EXHAUST/SUPPLY FAN(S), AND CURBS. HVAC/MECHANICAL CONTRACTOR (DIVISION 23) SHALL FURNISH AND INSTALL DUCTWORK BETWEEN EXHAUST HOOD COLLARS AND FAN(S). FINAL CONNECTION BY HVAC/MECHANICAL CONTRACTOR (DIVISION 23).
1F. KEC (SECTION 114000) SHALL FURNISH AND INSTALL EXHAUST HOODS. HVAC/MECHANICAL CONTRACTOR (DIVISION 23) SHALL INSTALL KEC (SECTION 114000) FURNISHED EXHAUST/SUPPLY FAN(S), AND CURBS. HVAC/MECHANICAL CONTRACTOR (DIVISION 23) SHALL FURNISH AND INSTALL DUCTWORK BETWEEN EXHAUST HOOD COLLARS AND FAN(S). FINAL CONNECTION BY HVAC/MECHANICAL CONTRACTOR (DIVISION 23).
2. GC (DIVISION 7) SHALL FLASH-IN ALL ROOF CURBS FOR EXHAUST/SUPPLY FAN(S).
3. ALL EXHAUST AND SUPPLY AIR SYSTEMS FOR EXHAUST HOODS TO BE TESTED AND BALANCED BY THE HVAC/MECHANICAL CONTRACTOR (DIVISION 23).
4A. FIRE SUPPRESSION SYSTEM FOR EXHAUST HOODS SHALL BE FURNISHED AND INSTALLED BY KEC (SECTION 114000).
4B. FIRE SUPPRESSION SYSTEM FOR EXHAUST HOODS SHALL BE FURNISHED AND INSTALLED BY HVAC/MECHANICAL CONTRACTOR (DIVISION 23).
4C. FIRE SUPPRESSION SYSTEM FOR EXHAUST HOODS SHALL BE FURNISHED BY KEC (SECTION 114000) AND INSTALLED BY HVAC/MECHANICAL CONTRACTOR (DIVISION 23).

## ELECTRICAL GENERAL REQUIREMENTS (DIVISION 26)

1 FOODSERVICE DRAWINGS INDICATE ELECTRICAL ROUGH-IN/CONNECTION POINTS ONLY FOR EQUIPMENT SPECIFIED UNDER THE KITCHEN EQUIPMENT (SECTION 114000) CONTRACT. ANY ADDITIONAL ELECTRICAL REQUIREMENTS ARE NOT INDICATED ON FOODSERVICE DRAWINGS.
2 ROUGH-INS, INTERWIRING, AND FINAL CONNECTIONS TO ALL FOODSERVICE EQUIPMENT SHALL BE COMPLETED BY ELECTRICAL CONTRACTOR (DIVISION 26).
3 FURNISH AND INSTALL ALL NECESSARY COMPONENTS TO MAKE FINAL CONNECTIONS; INCLUDING THE INSTALLATION OF COMPONENTS NOT SHOWN OR SHIPPED LOOSE.
4 VERIFY AVAILABLE BUILDING SERVICES WITH ELECTRICAL REQUIREMENTS OF ALL FOODSERVICE EQUIPMENT.
5 COVER PLATES IN FOODSERVICE AREAS SHALL BE STAINLESS STEEL UNLESS NOTED OTHERWISE.
6 COUNTERTOP HEIGHT RECEPTACLES IN FOODSERVICE AREAS SHALL BE INSTALLED HORIZONTALLY.
7 PROVIDE DEDICATED CIRCUITS FOR FOODSERVICE EQUIPMENT.
8 REUSE ELECTRICAL SERVICE WHERE APPLICABLE IN EXISTING/REMODELED FOODSERVICE AREAS. CAP OR REMOVE EXISTING SERVICE(S) MADE OBSOLETE BY NEW CONSTRUCTION AS DIRECTED BY CODE.
9 DIMENSIONS ARE SHOWN FROM FINISHED FLOORS, FINISHED WALLS, AND/OR COLUMN CENTERLINES TO CENTER OF ROUGH-IN.
10 ALL ELECTRICAL CONDUIT TO BE CONCEALED WITHIN WALLS, CEILINGS, AND FLOORS WHERE POSSIBLE.
11 PROVIDE GFCI PROTECTION AS DIRECTED BY CODE.
12 UNLESS SPECIFIED AS FURNISHED BY KEC (SECTION 114000), ELECTRICAL CONTRACTOR (DIVISION 26) SHALL FURNISH AND INSTALL ACCEPTABLE MEANS OF DISCONNECT FOR ALL ITEMS AS DIRECTED BY CODE.
13 PROVIDE LIQUID TIGHT D=CONDUIT WHERE EXPOSED IN FOODSERVICE AREAS UNLESS DIRECTED OTHERWISE BY CODE.
14 PROVIDE MINIMUM 6'-0" FLEXIBLE CONDUIT WHIP ON ALL MOBILE OR UNFASTENED FOODSWERVICE EQUIPMENT WITH DIRECT CONNECTION(S).
15 CONDUIT PENETRATING WALK-IN REFRIGERATION UNITS SHALL BE INSULATED OR OF MATERIAL TO PREVENT THERMAL TRANSFER. FOAM & SEAL INSIDE AND OUTSIDE OF PENETRATION(S) THRU WALK-IN TO PREVENT CONDENSATION.
16 INSTALL KEC (SECTION 114000) FURNISHED AIR CURTAIN(S) AND MICRO SWITCH(S) WHERE SPECIFIED.

## BEVERAGE SYSTEM GENERAL REQUIREMENTS (DIVISION 26)

1. PROVIDE ELECTRICAL METALIC TUBING (EMT) OR PVC SCHEDULE 40 ELECTRICAL CONDUIT UNLESS OTHERWISE DIRECTED BY CODE.
2. CONDUIT TO BE SMOOTH AND WATER TIGHT.
3. ALL CONDUIT BENDS ARE TO BE WIDE SWEEPS WITH 24" MIN. RADIUS. NO 90° OR 45° ANGLES. VERIFY REQUIREMENTS WITH BEVERAGE CONDUIT DETAILS.
4. PROVIDE PULL-BOX FOR OVERHEAD CONDUIT RUNS EVERY 3 BENDS OR 75' - 0".
5. CAP CONDUITS DURING CONSTRUCTION.

RELEASE FOR CONSTRUCTION
AS NOTED ON PLANS REVIEW
DEVELOPMENT SERVICES
LEE'S SUMMIT, MISSOURI
03/10/2021

TriMark®
Foodservice Equipment, Supplies and Design


East : United East
505 Collins Street
P.O. Box 3505
South Attleboro, MA 02703

p. 508-399-6000

trimarkusa.com



This document contains confidential information, is an instrument of a professional service, and the property of TriMark. It shall not be used on other projects or for the extension of this project without TriMark's written approval.


Owner and all Contractors to check and verify existing dimensions and conditions in the field before starting construction and to notify TriMark of any material or detail changes.

## REVISIONS

| DATE | NO. | DESCRIPTION |
|---|---|---|

# SHAKE SHACK LEE SUMMIT

LEE SUMMIT, MO

FOOD SERVICE DRAWINGS

PROJECT: 20-275

DATE: 11/25/2020

SCALE:

DRAWN: SMC | APPROVED: SD

SHEET: FOODSERVICE GENERAL NOTES, LEGENDS, SHEET INDEX

SHEET NUMBER: QF001

1/11/2021 3:24:34 PM

THIS DOCUMENT WAS ORIGINALLY PRINTED ON A 30" x 42" SIZE SHEET

K:\ENGINEERING\20-275 - SHAKE SHACK - LEE SUMMIT\K4 - LEE SUMMIT-R19.rvt

RELEASE FOR CONSTRUCTION
AS NOTED ON PLANS REVIEW
DEVELOPMENT SERVICES
LEE'S SUMMIT, MISSOURI

03/10/2021

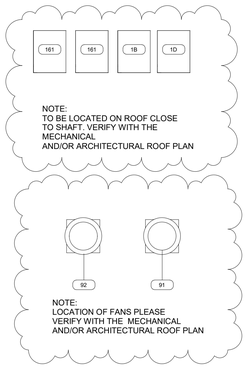

1 OVERALL FLOOR PLAN
1/4" = 1'-0"


TriMark®
Foodservice Equipment, Supplies and Design

East : United East
505 Collins Street
P.O. Box 3505
South Attleboro, MA 02703

p. 508-399-6000

trimarkusa.com



This document contains confidential information, is an instrument of a professional service, and the property of TriMark. It shall not be used on other projects or for the extension of this project without TriMark's written approval.


Owner and all Contractors to check and verify existing dimensions and conditions in the field before starting construction and to notify TriMark of any material or detail changes.

## REVISIONS

| DATE | NO. | DESCRIPTION |
|---|---|---|
| Date 1 | 1 | Revision 1 |

# SHAKE SHACK LEE SUMMIT

LEE SUMMIT, MO

FOOD SERVICE DRAWINGS

| | |
|---|---|
| PROJECT | 20-275 |
| DATE | 11/25/2020 |
| SCALE | 1/4" = 1'-0" |
| DRAWN | SMC |
| APPROVED | SD |

SHEET

FOODSERVICE EQUIPMENT PLAN

SHEET NUMBER:

QF101

# FOODSERVICE EQUIPMENT & UTILITY SCHEDULE

| ITEM NO. | QTY. | DESCRIPTION | MANUFACTURER | MODEL | REMARKS | SUPPLY HOT WATER SIZE | SUPPLY COLD WATER SIZE | SUPPLY FILTERED WATER SIZE | WASTE DIRECT SIZE | WASTE INDIRECT SIZE | WASTE INDIRECT IW# | GAS SIZE | GAS INPUT | ELECTRICAL VOLTS | ELECTRICAL PHASE | ELECTRICAL WATTS | ELECTRICAL HP | ELECTRICAL AMPS | CONNECTION TYPE | CONNECTION NEMA |
|---|---|---|---|---|---|---|---|---|---|---|---|---|---|---|---|---|---|---|---|---|
| 1 | 1 | WALKIN COOLER/FREEZER COMBO | BALLY | | REFER TO MANUFACTURER'S SHOP DRAWINGS FOR DETAILS | | | | | | | | | 120 | 1 | 1920 W | | 16.00 A | JBOX | |
| 1A | 1 | COOLER EVAPORATOR | BALLY | COOLER EVAPORATOR | REFER TO MANUFACTURER'S SHOP DRAWINGS FOR DETAILS | 0" | 0" | 0" | 0" | 3/4" | | 0" | 0.0 Btu/h | 120/208 | 1 | 208 W | | 1.00 A | | |
| 1B | 1 | AIR-COOLED COOLER CONDENSING UNIT | BALLY | COOLER CONDENSING UNIT | AIR - COOLED, REFER TO MANUFACTURER'S SHOP DRAWINGS FOR DETAILS | 0" | 0" | 0" | 0" | 0" | | 0" | 0.0 Btu/h | 120/208 | 3 | 1716 W | 2 | 8.25 A | | - |
| 1C | 1 | FREEZER EVAPORATOR | BALLY | FREEZER EVAPORATOR | REFER TO MANUFACTURER'S SHOP DRAWINGS FOR DETAILS | 0" | 0" | 0" | 0" | 3/4" | | 0" | 0.0 Btu/h | 120/208 | 1 | 208 W | | 1.00 A | | |
| 1D | 1 | AIR-COOLED COOLER CONDENSING UNIT | BALLY | FREEZER CONDENSING UNIT | AIR - COOLED, REFER TO MANUFACTURER'S SHOP DRAWINGS FOR DETAILS | 0" | 0" | 0" | 0" | 0" | | 0" | 0.0 Btu/h | 120/208 | 1 | 1716 W | 2 | 8.25 A | | - |
| 2-33 | 1 | SPARE NUMBER | CUSTOM | | | | | | | | | | | | | | | | | |
| 34 | 1 | WATER FILTER ASSEMBLY | EVERPURE | EV932806 | G.C. TO PROVIDE WALL BLOCKING. P.C. TO INTERPIPE TO ICE MAKER/COFFEE MAKER. | 0" | 3/4" | 0" | 0" | 0" | | | | | | | | | | |
| 35 | 1 | SPARE NUMBER | CUSTOM | | | | | | | | | | | | | | | | | |
| 36 | 1 | ICE CUBER | MANITOWOC | IYT1200A | | | 1/2" | | | 3/4" | | | | 120/208 | 1 | 2954 W | | 14.20 A | | |
| 36A | 1 | ICE BIN FOR ICE MACHINES | MANITOWOC | D570 | | | | | | 3/4" | | | | | | | | | | |
| 37-38 | 1 | SPARE NUMBER | CUSTOM | | | | | | | | | | | | | | | | | |
| 39 | 1 | FLOOR TROUGH | NIC | BY OTHERS | ALL TRADES TO VERIFY UTILITY REQUIREMENTS. | 0" | 0" | 0" | 3" | 0" | | | | | | | | | | |
| 40 | 1 | MOP SINK | NIC | F2820-12 | TO BE PROVIDED BY THE PLUMBER. | | | | 2" | | | | | | | | | | | |
| 40A | 1 | SERVICE FAUCET | T&S BRASS | B-0658 | G.C. TO PROVIDE WALL BLOCKING. | 1/2" | 1/2" | | | | | | | | | | | | | |
| 41-44 | 1 | SPARE NUMBER | CUSTOM | | | | | | | | | | | | | | | | | |
| 45A | 3 | HAND SINK | EAGLE | HSA-10-F-LRS | G.C. TO PROVIDE WALL BLOCKING. | 1/2" | 1/2" | 0" | 1 1/2" | 0" | | | | | | | | | | |
| 46-59 | 1 | SPARE NUMBER | CUSTOM | | | | | | | | | | | | | | | | | |
| 60 | 1 | THREE (3) COMP SINK | EAGLE | 314-22-3-24 | | | | | | | | | | | | | | | | |
| 60A | 1 | WALL / SPLASH MOUNT FAUCET | T&S BRASS | B-0231-CC | | 1/2" | 1/2" | | | | | | | | | | | | | |
| 60B | 1 | MINI PRE-RINSE FAUCET | T&S BRASS | MPZ-8WLN-08 | WITH ADD ON FAUCET AND WALL BRACKET, G.C. TO PROVIDE WALL BLOCKING. | 1/2" | 1/2" | | | | | | | | | | | | | |
| 60C | 3 | DRAIN, LEVER / TWIST WASTE | FISHER | 22209 | NOT SHOWN ON PLAN. | | | | | 2" | | | | | | | | | | |
| 61-62 | 1 | SPARE NUMBER | CUSTOM | | | | | | | | | | | | | | | | | |
| 63 | 1 | DISHWASHER - UNDERCOUNTER | MOYER DIEBEL | 201HT | WITH BUILT-IN HOT WATER BOOSTER. | 3/4" | 0" | | 0" | 5/8" | | | | 208 | 1 | 9000 W | 1 | 45.00 A | | DIRECT |
| 64-69 | 1 | SPARE NUMBER | CUSTOM | | | | | | | | | | | | | | | | | |
| 70A | 1 | DECK MOUNT FAUCET | T&S BRASS | B-0227 | | 1/2" | 1/2" | | | | | | | | | | | | | |
| 70C | 1 | DRAIN, LEVER / TWIST WASTE | FISHER | 22209 | NOT SHOWN ON PLAN. | | | | | 2" | | | | | | | | | | |
| 71-74 | 1 | SPARE NUMBER | CUSTOM | | | | | | | | | | | | | | | | | |
| 75 | 1 | MIXER, HAND | ROBOT COUPE | MP 350TURBOCOMBI | WITH STORAGE BRACKET. G.C. TO PROVIDE WALL BLOCKING. | | | | | | | | | 120 | 1 | 660 W | 1 | 0.00 A | | 5-15P |
| 76 | 1 | SPARE NUMBER | CUSTOM | | | | | | | | | | | | | | | | | |
| 77 | 1 | RETHERMALIZER, WATER TANK, ELECTRIC | PITCO | 113164 | | | | | | 3/8" | | | | 208 | 1 | 600 W | | 29.80 A | | L6□30P |
| 78 | 1 | FOOD PROCESSOR | WARING COMMERCIAL | WFP11SW | | | | | | | | | | 120 | 1 | 720 W | 3/4 | 6.00 A | | 5-15P |
| 79-89 | 1 | SPARE NUMBER | CUSTOM | | | | | | | | | | | | | | | | | |
| 90 | 1 | EXHAUST HOOD | NIC | BY OTHERS | ALL TRADES MUST VERIFY UTILITY REQUIREMENTS WITH THE OWNER. REFER TO MANUFACTURER'S SHOP DRAWINGS FOR DETAILS. | | | | | | | | | 120 | 0 | 0 W | | 0.00 A | JBOX | |
| 91 | 1 | EXHAUST FAN | NIC | BY OTHERS | ALL TRADES MUST VERIFY UTILITY REQUIREMENTS WITH THE OWNER. REFER TO MANUFACTURER'S SHOP DRAWINGS FOR DETAILS. | 0" | 0" | 0" | 0" | 0" | | 0" | 0.0 Btu/h | 120 | 1 | 864 W | 1 | 7.20 A | JBOX | DCO |
| 92 | 1 | SUPPLY FAN | NIC | BY OTHERS | ALL TRADES MUST VERIFY UTILITY REQUIREMENTS WITH THE OWNER. REFER TO MANUFACTURER'S SHOP DRAWINGS FOR DETAILS. | 0" | 0" | 0" | 0" | 0" | | 0" | 0.0 Btu/h | 120 | 1 | 864 W | 1 | 7.20 A | JBOX | DCO |
| 93 | 1 | GREASE COLLECTOR | NIC | BY OTHERS | ALL TRADES MUST VERIFY UTILITY REQUIREMENTS WITH THE OWNER. REFER TO MANUFACTURER'S SHOP DRAWINGS FOR DETAILS. | | | | | | | | | 120 | 1 | 2400 W | | 20.00 A | | 5-20P |
| 94 | 1 | ANSUL | NIC | BY OTHERS | E.C. TO INTERWIRE TO BUILDING ALARM SYSTEM AND FOR EQUIPMENT SHUT-DOWN. ALL TRADES MUST VERIFY UTILITY REUIQREMENTS WITH THE OWNER. | | | | | | | | | 120 | 1 | 960 W | | 8.00 A | | |
| 95-99 | 1 | SPARE NUMBER | CUSTOM | | | | | | | | | | | | | | | | | |
| 100 | 2 | GAS, COUNTER MODEL GRIDDLES | LANG MANUFACTURING | 9K?248SC?NATSH | | | | | | | | 3/4" | 108000.0 Btu/h | 115 | 1 | 50 W | | 2.00 A | | |
| 100A | 1 | SAFETY SYSTEM MOVEABLE GAS CONNECTOR | DORMONT | 1675KIT2S48 | NOT SHOWN ON PLAN. | 0" | 0" | 0" | 0" | 0" | | 0" | 0.0 Btu/h | | 0 | 0 W | | 0.00 A | | |
| 101A | 1 | SAFETY SYSTEM MOVEABLE GAS CONNECTOR | DORMONT | 1675KIT2S48 | NOT SHOWN ON PLAN. | 0" | 0" | 0" | 0" | 0" | | 0" | 0.0 Btu/h | | 0 | 0 W | | 0.00 A | | |
| 102A | 2 | EQUIPMENT STAND, REFRIGERATED BASE | RANDELL | 20048□513□SS□L | ON CASTERS, LEFT SIDE COMPRESSOR. | 0" | 0" | 0" | 0" | 1/2" | | 0" | 0.0 Btu/h | | 1 | 1001 W | 1/4 | 8.70 A | | 5-15P |
| 102E | 1 | 48" REFRIGERATED BASE | RANDELL | 20048□513□SS□R | ON CASTERS, LEFT SIDE COMPRESSOR. | 0" | 0" | 0" | 0" | 1/2" | | 0" | 0.0 Btu/h | | 1 | 1001 W | 1/4 | 8.70 A | | 5-15P |
| 103 | 1 | FRYER BATTERY, GAS | PITCO | 2-SSH55C-S/FD | WITH FILTER DRAWER (103B), DIGITAL CONTROLS, CASTERS, DOUBLE BASKET HANGERS. | | | | | | | 3/4" | 160000.0 Btu/h | | 1 | | | 1.40 A | C&P | |
| 103A | 1 | SAFETY SYSTEM MOVEABLE GAS CONNECTOR | DORMONT | 1675KIT2S48 | NOT SHOWN ON PLAN. | 0" | 0" | 0" | 0" | 0" | | 0" | 0.0 Btu/h | | 0 | 0 W | | 0.00 A | | |
| 103B | 1 | FILTER DRAWER | PITCO | SSH55□2FD | | | | | | | | | | 115 | 1 | 840 W | 1/3 | 7.00 A | C&P | 5-15P |
| 104 | 1 | FRYER BATTERY OF 2 | PITCO | 2-SSH55C-S/FD | WITH FILTER DRAWER (104B), DIGITAL CONTROLS, CASTERS, DOUBLE BASKET HANGERS. | | | | | | | 3/4" | 160000.0 Btu/h | | 1 | | | 1.40 A | C&P | |
| 104A | 1 | SAFETY SYSTEM MOVEABLE GAS CONNECTOR | DORMONT | 1675KIT2S48 | | 0" | 0" | 0" | 0" | 0" | | 0" | 0.0 Btu/h | | 0 | 0 W | | 0.00 A | | |
| 104B | 1 | FILTER DRAWER | PITCO | SSH55□2FD | | | | | | | | | | 115 | 1 | 840 W | 1/3 | 7.00 A | C&P | 5-15P |
| 105 | 1 | FRY HOLDING STATIONS | HATCO CORPORATION | GRFHS-PT16 | | | | | | | | | | 120 | 1 | 1090 W | | 9.10 A | C&P | 5-15P |
| 106-120 | 1 | SPARE NUMBER | CUSTOM | | | | | | | | | | | | | | | | | |
| 121 | 1 | TOASTER, CONVEYOR | APW WYOTT | M□95□3 | | | | | | | | | | 208 | 1 | 2780 W | | 13.40 A | C&P | 6-20P |
| 122 | 1 | PREP REFRIGERATOR | RANDELL | 9040K-513 | | | | | | | | | | | 1 | 0 W | 1/3 | 9.00 A | | 5-15P |
| 122A | 1 | PREP REFRIGERATOR | RANDELL | 9030K-513 | | | | | | | | | | | 1 | 0 W | 1/3 | 9.00 A | | 5-15P |
| 123 | 1 | WORKTOP FREEZER | RANDELL | 9402F-290 | | | | | | | | | | 115 | 1 | 240 W | 1/4 | 2.20 A | C&P | 5-15P |
| 124 | 1 | FOOD TOPPING WARMER | SERVER PRODUCTS | 81220 | WITH (2) 94009 S/S JARS. | | | | | | | | | 120 | 1 | 1000 W | | 8.30 A | C&P | 5-15P |
| 125 | 2 | KDS SCREEN | BY OTHERS | BY OTHERS | ALL TRADES TO BERIFY UTILITY REQUIREMENTS. E.C. TO PROVIDE ISOLATED GROUND. | | | | | | | | | 120 | 1 | 1800 W | | 15.00 A | JBOX | 5-15P |
| 126-129 | 1 | SPARE NUMBER | CUSTOM | | | | | | | | | | | | | | | | | |
| 130 | 1 | OVERSHELF | EAGLE | OVERSHELF | ALL S/S, SIZE AS PER PLANS. | | | | | | | | | | 1 | 0 W | | 20.00 A | JBOX | |
| 131 | 1 | HEATED SHELF FOOD WARMER | HATCO | GRSB-60-F | | | | | | | | | | 120 | 1 | 950 W | | 8.00 A | | |
| 131A | 1 | HEATED SHEKF FOOD WARMER | HATCO | GRSB-48-F | | | | | | | | | | 120 | 1 | 770 W | | 6.00 A | | |
| 133 | 1 | HEAT LAMP | HATCO | GRAHL□60D3 | WITH REMOTE BOX ENCLOSURE. | | | | | | | | | 120/208 | 1 | 3100 W | - | 16.00 A | JBOX | - |
| 133A | 1 | HEAT LAMP | HATCO | GRAHL□48D3 | | | | | | | | | | 120/208 | 1 | 2440 W | - | 12.60 A | JBOX | |
| 134 | 1 | HEAT LAMP | HATCO | UGAHL□24D3 | | | | | | | | | | 120/208 | 1 | 1620 W | - | 8.20 A | JBOX | - |
| 135 | 1 | BUILT IN HEATED SHELF | HATCO | GRSB-24-F | | | | | | | | | | 120 | 1 | 420 W | | 4.00 A | | |
| 136-140 | 1 | SPARE NUMBER | CUSTOM | | | | | | | | | | | | | | | | | |
| 141 | 1 | KDS SCREEN | BY OTHERS | BY OTHERS | ALL TRADES TO BERIFY UTILITY REQUIREMENTS. E.C. TO PROVIDE ISOLATED GROUND. | | | | | | | | | 120 | 1 | 1800 W | | 15.00 A | C&P | 5-15P |
| 143 | 2 | CURVED LID DISPLAY FREEZER | EXCELLENCE INDUSTRIES | MB□2HCD | | | | | | | | | | 115 | 1 | 1600 W | 1/3 | 1.00 A | | 5-15P |
| 145 | 2 | FOOD TOPPING WARMER | SERVER PRODUCTS | 81195 | WITH (2) 94009 S/S JARS. | | | | | | | | | 120 | 1 | 517 W | | 4.30 A | C&P | 5-15P |
| 146-159 | 1 | SPARE NUMBER | CUSTOM | | | | | | | | | | | | | | | | | |
| 160 | 1 | FROZEN CUSTARD MACHINE | STOELTING | M202-209B00SIR | REFRIGERATION INSTALLER TO PROVIDE QUICK DISCONNECT LINES. | | 1/2" | | | 1 1/2" | | | | 208/230 | 3 | 3120 W | 3 | 15.00 A | | L6-30P |
| 161 | 2 | REMOTE CONDENSING UNIT | STOELTING | 285091 | AIR-COOLED REFER TO MANUFACTURER'S SHOP DRAWINGS FOR DETAILS. | 0" | 0" | 0" | 0" | 0" | | 0" | 0.0 Btu/h | 120/208 | 3 | 1716 W | 2 | 8.25 A | | - |
| 162 | 1 | FROZEN CUSTARD DIPPING CABINET | C. NELSON MFG. | BS2SE□RB | | | | | | 1" | | | | 115 | 1 | 1800 W | | 15.00 A | C&P | 5-15 |
| 163-170 | 1 | SPARE NUMBER | CUSTOM | | | | | | | | | | | | | | | | | |
| 171 | 2 | DIPPERWILL | T&S BRASS | B-2282-01 | WITH FAUCET. | 0" | 0" | 0" | 0" | 0" | | | | | | | | | | |
| 172 | 1 | DIPPING CABINET | RANDELL | 69345A□SS44 | | | | | | | | | | 115 | 1 | 786 W | 1/3 | 6.50 A | | |
| 174 | 2 | KDS SCREEN | BY OTHERS | BY OTHERS | ALL TRADES TO BERIFY UTILITY REQUIREMENTS. E.C. TO PROVIDE ISOLATED GROUND. | | | | | | | | | 120 | 1 | 1800 W | | 15.00 A | JBOX | 5-15P |
| 177 | 1 | SHAKE TABLE W/SINK | EAGLE | CUSTOM | ALL S/S CONSTRUCTION WITH 10" X 14" X 9.5" DEEP INTEGRAL SINK W/ FAUCET W/ BASKET DRAIN, MARINE EDGES, BACK & RIGHT SIDE SPLASH. | 1/2" | 1/2" | 0" | 0" | 2" | | | | | | | | | | |
| 177A | 1 | FAUCET | ELKAY FOODSERVICE PRODUCTS | LK□1110 | P.C. TO INTERPIPE THIS CONNECTION FROM WATER FILTER, MOUNTED TO ITEM #177. | 0" | 1/2" | 0" | 0" | 0" | | | | | | | | | | |
| 178-180 | 1 | SPARE NUMBER | CUSTOM | | | | | | | | | | | | | | | | | |
| 181 | 1 | COLD BEVERAGE DISPENSERS | GRINDMASTER-CECILWARE | C-1S-16 | WITH CUP ACTIVATED HANDLE OPTION AND 11161M MILK IMPELLER. | | | | | | | | | 120 | 1 | 450 W | | 4.00 A | C&P | 5-15P |
| 182 | 2 | MIXER, DRINK / BAR | HAMILTON BEACH | HMD400 | ONE (1) BACKUP MIXER NOT SHOWN ON PLAN. | | | | | | | | | 120 | 0 | 900 W | 1/3 | 7.50 A | C&P | 5-15P |
| 183 | 1 | SPARE NUMBER | CUSTOM | | | | | | | | | | | | | | | | | |
| 184 | 1 | MIXER, DRINK/BAR | HAMILTON BEACH | HMD900 | | | | | | | | | | 120 | 1 | 624 W | 3/4 | 5.20 A | C&P | 5-15P |
| 185-186 | 1 | SPARE NUMBER | CUSTOM | | | | | | | | | | | | | | | | | |
| 188 | 1 | DISHWASHER - UNDERCOUNTER | MOYER DIEBEL | 201HT | WITH BUILT-IN HOT WATER BOOSTER. | 3/4" | 0" | | 0" | 5/8" | | | | 208 | 1 | 9000 W | 1 | 45.00 A | | DIRECT |
| 189-202 | 1 | SPARE NUMBER | CUSTOM | | | | | | | | | | | | | | | | | |
| 203 | 2 | ICE CHEST AND SODA TOWER | BY OTHERS | NIC | ALL TRADES TO VERIFY UTILITY REQUIREMENTS. | | 0" | | | 3/4" | | | | 115 | 1 | 0 W | | 0.00 A | | |
| 204 | 1 | TEA BREWER | NIC | BY OTHERS | ALL TRADES TO VERIFY UTILITY REQUIREMENTS. | 0" | 1/2" | 0" | 0" | 0" | | 0" | 0.0 Btu/h | 120 | 0 | 1730 W | - | 14.40 A | | 5-15P |
| 206 | 2 | BEVERAGE DISPENSER | GRINDMASTER | D25-3 | WITH 3709 LOW FOAM IMPELLER AND 2266 CUP ACTIVATED HANDLE. | 0" | 0" | 0" | 0" | 0" | | 0" | 0.0 Btu/h | 120 | 1 | 645 W | | 5.60 A | | 5-15P |
| 208 | 1 | KDS SCREEN | BY OTHERS | BY OTHERS | ALL TRADES TO BERIFY UTILITY REQUIREMENTS. E.C. TO PROVIDE ISOLATED GROUND. | | | | | | | | | 120 | 1 | 1800 W | | 15.00 A | C&P | 5-15P |
| 209-220 | 1 | SPARE NUMBER | CUSTOM | | | | | | | | | | | | | | | | | |
| 221 | 4 | POS TERMINALS | NIC | BY OTHERS | ALL TRADES TO BERIFY UTILITY REQUIREMENTS. E.C. TO PROVIDE ISOLATED GROUND. | | | | | | | | | | | | | | | |
| 223 | 1 | 3-Faucet Dispensing Head and Top Mounted Drip Pan | CHILL RITE | THTT-3-SS-S-5 -LED-A | THREE FAUCET WITH DRIP PAN. | 0" | 0" | | | 3/4" | | | | | | | | | | |
| 224 | 1 | DRAFT BEER SYSTEM POWER PACK | CHILLRITE | MLN-33 | | | 1" | | | | | | | 120 | 1 | 1440 W | 1/3 | 12.00 A | C&P | 5-20P |
| 225-229 | 1 | SPARE NUMBER | CUSTOM | | | | | | | | | | | | | | | | | |
| 230 | 1 | CONDIMENT COUNTER | EAGLE | CONDIMENT COUNTER | | | | | 0" | 3/4" | | | | | | | | | | |

RELEASE FOR CONSTRUCTION
AS NOTED ON PLANS REVIEW
DEVELOPMENT SERVICES
LEE'S SUMMIT, MISSOURI
03/10/2021


TriMark®
Foodservice Equipment, Supplies and Design

East : United East
505 Collins Street
P.O. Box 3505
South Attleboro, MA 02703

p. 508-399-6000

trimarkusa.com



This document contains confidential information, is an instrument of a professional service, and the property of TriMark. It shall not be used on other projects or for the extension of this project without TriMark's written approval.


Owner and all Contractors to check and verify existing dimensions and conditions in the field before starting construction and to notify TriMark of any material or detail changes.

## REVISIONS

| DATE | NO. | DESCRIPTION |
|---|---|---|
| | | |

SHAKE SHACK LEE SUMMIT

LEE SUMMIT, MO

FOOD SERVICE DRAWINGS

PROJECT: 20-275

DATE: 11/25/2020

SCALE:

DRAWN: SMC

APPROVED: SD

SHEET: FOODSERVICE SCHEDULES

SHEET NUMBER: QF102

RELEASE FOR CONSTRUCTION
AS NOTED ON PLANS REVIEW
DEVELOPMENT SERVICES
LEE'S SUMMIT, MISSOURI
03/10/2021

# FOODSERVICE ELECTRICAL SCHEDULE

| | | | ELECTRICAL | | | | | | ROUGH-IN / CONNECTION | | | | |
|---|---|---|---|---|---|---|---|---|---|---|---|---|---|
| ITEM NO. | QTY | DESCRIPTION | VOLTS | CYCLE | PHASE | KW | HP | AMPS | TYPE | NEMA | ROUTING | HGT AFF | REMARKS |
| 1 | 1 | WALKIN COOLER/FREEZER COMBO | 120 | 0 Hz | 1 | 1.92 | | 16.00 A | JBOX | | DFA | | E.C. TO MOUNT AND INTERWIRE FROM SWITCH TO FLOURSCENT LIGHT FIXTURES. |
| 1A | 1 | COOLER EVAPORATOR | 120/208 | 0 Hz | 1 | 0.21 | | 1.00 A | | | | | INFORMATION SHOWN IS FOR COORDINATION AND IS TO BE VERIFIED WITH THE SHOP DRAWINGS. E.C. TO PROVIDE DATA OUTLET WIRED BACK TO OFFICE. |
| 1B | 1 | AIR-COOLED COOLER CONDENSING UNIT | 120/208 | 60 Hz | 3 | 1.72 | 2 | 8.25 A | | - | | | INFORMATION SHOWN IS FOR COORDINATION AND IS TO BE VERIFIED WITH THE SHOP DRAWINGS. |
| 1C | 1 | FREEZER EVAPORATOR | 120/208 | 0 Hz | 1 | 0.21 | | 1.00 A | | | | | INFORMATION SHOWN IS FOR COORDINATION AND IS TO BE VERIFIED WITH THE SHOP DRAWINGS. E.C. TO PROVIDE DATA OUTLET WIRED BACK TO OFFICE. |
| 1D | 1 | AIR-COOLED COOLER CONDENSING UNIT | 120/208 | 60 Hz | 1 | 1.72 | 2 | 8.25 A | | - | | | INFORMATION SHOWN IS FOR COORDINATION AND IS TO BE VERIFIED WITH THE SHOP DRAWINGS. |
| 2-33 | 1 | SPARE NUMBER | | | | | | | | | | | |
| 35 | 1 | SPARE NUMBER | | | | | | | | | | | |
| 36 | 1 | ICE CUBER | 120/208 | 60 Hz | 1 | 2.95 | | 14.20 A | | | | | TO TOP OF JUNCTION BOX. |
| 37-38 | 1 | SPARE NUMBER | | | | | | | | | | | |
| 41-44 | 1 | SPARE NUMBER | | | | | | | | | | | |
| 46-59 | 1 | SPARE NUMBER | | | | | | | | | | | |
| 61-62 | 1 | SPARE NUMBER | | | | | | | | | | | |
| 63 | 1 | DISHWASHER - UNDERCOUNTER | 208 | 60 Hz | 1 | 9.00 | 1 | 45.00 A | | DIRECT | | 16" | E.C. SHALL VERIFY DISHMACHINE PHASE WITH G.C. PRIOR TO ROUGH-IN, AS REQUIRED; REQUIRES3 WIRES AND GROUND CONNECTION. OUTLET TO BE 16" ADD TO TOP OF OUTLET. |
| 64-69 | 1 | SPARE NUMBER | | | | | | | | | | | |
| 71-74 | 1 | SPARE NUMBER | | | | | | | | | | | |
| 75 | 1 | MIXER, HAND | 120 | 60 Hz | 1 | 0.66 | 1 | | | 5-15P | | 48" | OUTLET TO BE 48" AFF TO TOP OF OUTLET. |
| 76 | 1 | SPARE NUMBER | | | | | | | | | | | |
| 77 | 1 | RETHERMALIZER, WATER TANK, ELECTRIC | 208 | 60 Hz | 1 | 0.60 | | 29.80 A | | L6□30P | | 48" | OUTLET TO BE 48" AFF TO TOP OF OUTLET. |
| 78 | 1 | FOOD PROCESSOR | 120 | 60 Hz | 1 | 0.72 | 3/4 | 6.00 A | | 5-15P | | 48" | OUTLET TO BE 48" AFF TO TOP OF OUTLET. |
| 79-89 | 1 | SPARE NUMBER | | | | | | | | | | | |
| 90 | 1 | EXHAUST HOOD | 120 | 0 Hz | | | | | JBOX | | | | STUB FROM CEILING, TO BE VERIFIED WITH OWNER PRIOR TO ROUGH-IN. |
| 91 | 1 | EXHAUST FAN | 120 | 0 Hz | 1 | 0.86 | 1 | 7.20 A | JBOX | DCO | VERIFY | | STUB FROM ROOF, TO BE VERIFIED WITH OWNER PRIOR TO ROUGH-IN. |
| 92 | 1 | SUPPLY FAN | 120 | 0 Hz | 1 | 0.86 | 1 | 7.20 A | JBOX | DCO | VERIFY | | STUB FROM ROOF, TO BE VERIFIED WITH OWNER PRIOR TO ROUGH-IN. |
| 93 | 1 | GREASE COLLECTOR | 120 | 0 Hz | 1 | 2.40 | | 20.00 A | | 5-20P | | 16" | OUTLET TO BE 16" AFF TO TOP OF OUTLET. |
| 94 | 1 | ANSUL | 120 | 0 Hz | 1 | 0.96 | | 8.00 A | | | | 88" | STUB FROM CEILING, TO BE VERIFIED WITH OWNER PRIOR TO ROUGH-IN, E.C. TO INTERWIRE TO BUILDING ALARM SYSTEM AND FOR EQUIPMENT SHUTDOWN. |
| 95-99 | 1 | SPARE NUMBER | | | | | | | | | | | |
| 100 | 2 | GAS, COUNTER MODEL GRIDDLES | 115 | 60 Hz | 1 | 0.05 | | 2.00 A | | | | 16" | OUTLET TO BE 16" AFF TO TOP OF OUTLET. |
| 100A | 1 | SAFETY SYSTEM MOVEABLE GAS CONNECTOR | | 0 Hz | | | | | | | | | |
| 101A | 1 | SAFETY SYSTEM MOVEABLE GAS CONNECTOR | | 0 Hz | | | | | | | | | |
| 102A | 2 | EQUIPMENT STAND, REFRIGERATED BASE | | 60 Hz | 1 | 1.00 | 1/4 | 8.70 A | | 5-15P | | 16" | OUTLET TO BE 16" AFF TO TOP OF OUTLET. |
| 102E | 1 | 48" REFRIGERATED BASE | | 60 Hz | 1 | 1.00 | 1/4 | 8.70 A | | 5-15P | | 16" | OUTLET TO BE 16" AFF TO TOP OF OUTLET. |
| 103 | 1 | FRYER BATTERY, GAS | | 60 Hz | 1 | | | 1.40 A | C&P | | | 16" | OUTLET TO BE 16" AFF TO TOP OF OUTLET. |
| 103A | 1 | SAFETY SYSTEM MOVEABLE GAS CONNECTOR | | 0 Hz | | | | | | | | | |
| 103B | 1 | FILTER DRAWER | 115 | 60 Hz | 1 | 0.84 | 1/3 | 7.00 A | C&P | 5-15P | | 16" | |
| 104 | 1 | FRYER BATTERY OF 2 | | 60 Hz | 1 | | | 1.40 A | C&P | | | 16" | OUTLET TO BE 16" AFF TO TOP OF OUTLET. |
| 104A | 1 | SAFETY SYSTEM MOVEABLE GAS CONNECTOR | | 0 Hz | | | | | | | | | |
| 104B | 1 | FILTER DRAWER | 115 | 60 Hz | 1 | 0.84 | 1/3 | 7.00 A | C&P | 5-15P | | 16" | |
| 105 | 1 | FRY HOLDING STATIONS | 120 | 60 Hz | 1 | 1.09 | | 9.10 A | C&P | 5-15P | | 16" | OUTLET TO BE 16" AFF TO TOP OF OUTLET. |
| 106-120 | 1 | SPARE NUMBER | | | | | | | | | | | |
| 121 | 1 | TOASTER, CONVEYOR | 208 | 60 Hz | 1 | 2.78 | | 13.40 A | C&P | 6-20P | | 42" | ELECTRICAL OUTLET AT 42" AFF TO THE BOTTOM OF OUTLET, E.C. TO MOUNT OUTLET HORIZONTAL. |
| 122 | 1 | PREP REFRIGERATOR | | 60 Hz | 1 | | 1/3 | 9.00 A | | 5-15P | | | OUTLET TO BE 16" AFF TO TOP OF OUTLET. |
| 122A | 1 | PREP REFRIGERATOR | | 60 Hz | 1 | | 1/3 | 9.00 A | | 5-15P | | 16" | OUTLET TO BE 16" AFF TO TOP OF OUTLET. |
| 123 | 1 | WORKTOP FREEZER | 115 | 60 Hz | 1 | 0.24 | 1/4 | 2.20 A | C&P | 5-15P | | 16" | OUTLET TO BE 16" AFF TO TOP OF OUTLET. |
| 124 | 1 | FOOD TOPPING WARMER | 120 | 60 Hz | 1 | 1.00 | | 8.30 A | C&P | 5-15P | | 42" | ELECTRICAL OUTLET AT 42" AFF TO THE BOTTOM OF OUTLET, E.C. TO MOUNT OUTLET HORIZONTAL. |
| 125 | 2 | KDS SCREEN | 120 | | 1 | 1.80 | | 15.00 A | JBOX | 5-15P | | | STUB OUT OF WALL WITH ITEM #130, WIRE IN TOP CHASE. E.C. TO PROVIDE ISOLATED GROUND. |
| 126-129 | 1 | SPARE NUMBER | | | | | | | | | | | |
| 130 | 1 | OVERSHELF | | 0 Hz | 1 | | | 20.00 A | JBOX | | | 76" | TO STUB OUT OF WALL WITH CIRCUITS FOR ITEM #'S 125, 131, 134, 135, 141, (6) 120V/1PH/20AMP CIRCUITS AND (6) DATA OUTLETS. |
| 131 | 1 | HEATED SHELF FOOD WARMER | 120 | 60 Hz | 1 | 0.95 | | 8.00 A | | | | | STUB OUT OF WALL WITH ITEM# 130, WIRE IN TOP CHASE |
| 131A | 1 | HEATED SHEKF FOOD WARMER | 120 | 60 Hz | 1 | 0.77 | | 6.00 A | | | | | STUB OUT OF WALL WITH ITEM# 130, WIRE IN TOP CHASE |
| 133 | 1 | HEAT LAMP | 120/208 | 60 Hz | 1 | 3.10 | - | 16.00 A | JBOX | - | | | STUB OUT OF WALL WITH ITEM# 130, WIRE IN TOP CHASE |
| 133A | 1 | HEAT LAMP | 120/208 | 60 Hz | 1 | 2.44 | - | 12.60 A | JBOX | | | | STUB OUT OF WALL WITH ITEM# 130, WIRE IN TOP CHASE |
| 134 | 1 | HEAT LAMP | 120/208 | 60 Hz | 1 | 1.62 | - | 8.20 A | JBOX | - | | | STUB OUT OF WALL WITH ITEM# 130, WIRE IN TOP CHASE |
| 135 | 1 | BUILT IN HEATED SHELF | 120 | 60 Hz | 1 | 0.42 | | 4.00 A | | | | | STUB OUT OF WALL WITH ITEM# 130, WIRE IN TOP CHASE |
| 136-140 | 1 | SPARE NUMBER | | | | | | | | | | | |
| 141 | 1 | KDS SCREEN | 120 | | 1 | 1.80 | | 15.00 A | C&P | 5-15P | | 60" | OUTLET TO BE 60" AFF TO TOP OF OUTLET. E.C. SHALL PROVIDE ISOLATED GROUND. |
| 143 | 2 | CURVED LID DISPLAY FREEZER | 115 | 60 Hz | 1 | 1.60 | 1/3 | 1.00 A | | 5-15P | | 16" | |
| 145 | 2 | FOOD TOPPING WARMER | 120 | 60 Hz | 1 | 0.52 | | 4.30 A | C&P | 5-15P | | | ELECTRICAL OUTLET AT 42" AFF TO THE BOTTOM OF OUTLET, E.C. TO MOUNT OUTLET HORIZONTAL. |
| 146-159 | 1 | SPARE NUMBER | | | | | | | | | | | |
| 160 | 1 | FROZEN CUSTARD MACHINE | 208/230 | 60 Hz | 3 | 3.12 | 3 | 15.00 A | | L6-30P | | 16" | (2) CIRCUITS WITH OVER CURRENT PROTECTION DEVICE OUTLET TO BE 16" AFF TO TOP OF OUTLET, .E.C. TO PROVIDE CORD & PLUG PER LOCAL CODES, ALL TO BE VERIFIED WITH MANUFACTURERS SHOP DRAWINGS. |
| 161 | 2 | REMOTE CONDENSING UNIT | 120/208 | 60 Hz | 3 | 1.72 | 2 | 8.25 A | | - | | | |
| 162 | 1 | FROZEN CUSTARD DIPPING CABINET | 115 | 0 Hz | 1 | 1.80 | | 15.00 A | C&P | 5-15 | | 16" | OUTLET TO BE 16" AFF TO TOP OF OUTLET. |
| 163-170 | 1 | SPARE NUMBER | | | | | | | | | | | |
| 172 | 1 | DIPPING CABINET | 115 | 0 Hz | 1 | 0.79 | 1/3 | 6.50 A | | | | 16" | OUTLET TO BE 16" AFF TO TOP OF OUTLET. |
| 174 | 2 | KDS SCREEN | 120 | | 1 | 1.80 | | 15.00 A | JBOX | 5-15P | | | STUB OUT OF WALL WITH ITEM# 130, WIRE IN TOP CHASE |
| 178-180 | 1 | SPARE NUMBER | | | | | | | | | | | |
| 181 | 1 | COLD BEVERAGE DISPENSERS | 120 | 60 Hz | 1 | 0.45 | | 4.00 A | C&P | 5-15P | | 42" | ELECTRICAL OUTLET 42" AFF TO BOTTOM OF OUTLET, E.C. TO MOUNT OUTLET HORIZONTAL. |
| 182 | 2 | MIXER, DRINK / BAR | 120 | 60 Hz | | 0.90 | 1/3 | 7.50 A | C&P | 5-15P | | 42" | ELECTRICAL OUTLET AT 42" AFF TO THE BOTTOM OF OUTLET, E.C. TO MOUNT OUTLET HORIZONTAL. |
| 183 | 1 | SPARE NUMBER | | | | | | | | | | | |
| 184 | 1 | MIXER, DRINK/BAR | 120 | 60 Hz | 1 | 0.62 | 3/4 | 5.20 A | C&P | 5-15P | | 42" | ELECTRICAL OUTLET AT 42" AFF TO THE BOTTOM OF OUTLET, E.C. TO MOUNT OUTLET HORIZONTAL. |
| 185-186 | 1 | SPARE NUMBER | | | | | | | | | | | |
| 188 | 1 | DISHWASHER - UNDERCOUNTER | 208 | 60 Hz | 1 | 9.00 | 1 | 45.00 A | | DIRECT | | 16" | E.C. SHALL VERIFY DISHMACHINE PHASE WITH G.C. PRIOR TO ROUGH-IN, AS REQUIRED; REQUIRES3 WIRES AND GROUND CONNECTION. OUTLET TO BE 16" ADD TO TOP OF OUTLET. |
| 189-202 | 1 | SPARE NUMBER | | | | | | | | | | | |
| 203 | 2 | ICE CHEST AND SODA TOWER | 115 | 60 Hz | 1 | | | | | | | 48" | E.C. TO VERIFY ALL UTILITY REQUIREMENTS WITH THE SODA VENDOR |
| 204 | 1 | TEA BREWER | 120 | 0 Hz | | 1.73 | - | 14.40 A | | 5-15P | | 42" | ELECTRICAL OUTLET AT 42" AFF TO THE BOTTOM OF OUTLET, E.C. TO MOUNT OUTLET HORIZONTAL. |
| 206 | 2 | BEVERAGE DISPENSER | 120 | 0 Hz | 1 | 0.65 | | 5.60 A | | 5-15P | | 60" | ELECTRICAL OUTLET AT 42" AFF TO THE BOTTOM OF OUTLET, E.C. TO MOUNT OUTLET HORIZONTAL. |
| 208 | 1 | KDS SCREEN | 120 | | 1 | 1.80 | | 15.00 A | C&P | 5-15P | | 60" | OUTLET TO BE 60" AFF TO TOP OF OUTLET. E.C. SHALL PROVIDE ISOLATED GROUND. |
| 209-220 | 1 | SPARE NUMBER | | | | | | | | | | | |
| 221 | 4 | POS TERMINALS | | | | | | | | | | | |
| 224 | 1 | DRAFT BEER SYSTEM POWER PACK | 120 | 60 Hz | 1 | 1.44 | 1/3 | 12.00 A | C&P | 5-20P | | 114" | E.C. TO VERIFY FINAL LOCATION WITH THE G.C. |
| 225-229 | 1 | SPARE NUMBER | | | | | | | | | | | |


TriMark®
Foodservice Equipment, Supplies and Design

East : United East
505 Collins Street
P.O. Box 3505
South Attleboro, MA 02703

p. 508-399-6000

trimarkusa.com



This document contains confidential information, is an instrument of a professional service, and the property of TriMark. It shall not be used on other projects or for the extension of this project without TriMark's written approval.


Owner and all Contractors to check and verify existing dimensions and conditions in the field before starting construction and to notify TriMark of any material or detail changes.

## REVISIONS

| DATE | NO. | DESCRIPTION |
|---|---|---|
| | | |

SHAKE SHACK LEE SUMMIT

LEE SUMMIT, MO

FOOD SERVICE DRAWINGS

PROJECT: 20-275

DATE: 11/25/2020

SCALE:

DRAWN: SMC

APPROVED: SD

SHEET: QF102A - FOODSERVICE UTILITY SCHEDULES

SHEET NUMBER: QF102A

1/11/2021 3:24:36 PM

# FOODSERVICE PLUMBING SCHEDULE

| ITEM NO. | QTY | DESCRIPTION | SUPPLY | | | | | | WASTE | | | | GAS | | | PLUMBING REMARKS |
|---|---|---|---|---|---|---|---|---|---|---|---|---|---|---|---|---|
| | | | HOT WATER | | COLD WATER | | FILTERED WATER | | DIRECT | | INDIRECT | | | | | |
| | | | SIZE | HGT AFF | SIZE | HGT AFF | SIZE | HGT AFF | SIZE | HGT AFF | SIZE | IW# | SIZE | MBTU | HGT AFF | |
| 1A | 1 | COOLER EVAPORATOR | | | | | | | | | 3/4" | | | | | P.C. TO RUN I.W. TO FLOOR SINK AS REQUIRED |
| 1C | 1 | FREEZER EVAPORATOR | | | | | | | | | 3/4" | | | | | P.C. TO RUN I.W. TO FLOOR SINK AS REQUIRED |
| 2-33 | 1 | SPARE NUMBER | | | | | | | | | | | | | | |
| 34 | 1 | WATER FILTER ASSEMBLY | | | 3/4" | 90" | | | | | | | | | | P.C. TO INTERPIPE COLD WATER OUTLET TO ICE MAKER, COFFEE AND WATER EQUIPMENT. |
| 35 | 1 | SPARE NUMBER | | | | | | | | | | | | | | |
| 36 | 1 | ICE CUBER | | | 1/2" | | | | | | 3/4" | | | | | P.C. TO ITERPIPE COLD WATER CONNECTION FROM ITEM 34 WATER FILTER; P.C. TO RUN I.W. TO FLOOR SINK AS REQUIRED. |
| 36A | 1 | ICE BIN FOR ICE MACHINES | | | | | | | | | 3/4" | | | | | P.C. TO RUN I.W. TO FLOOR SINK AS REQUIRED |
| 37-38 | 1 | SPARE NUMBER | | | | | | | | | | | | | | |
| 39 | 1 | FLOOR TROUGH | | | | | | | 3" | | | | | | | |
| 40 | 1 | MOP SINK | | | | | | | 2" | | | | | | | |
| 40A | 1 | SERVICE FAUCET | 1/2" | | 1/2" | | | | | | | | | | | |
| 41-44 | 1 | SPARE NUMBER | | | | | | | | | | | | | | |
| 45A | 3 | HAND SINK | 1/2" | 5" | 1/2" | 5" | | | 1 1/2" | 18" | | | | | | |
| 46-59 | 1 | SPARE NUMBER | | | | | | | | | | | | | | |
| 60 | 1 | THREE (3) COMP SINK | | | | | | | | | | | | | | |
| 60A | 1 | WALL / SPLASH MOUNT FAUCET | 1/2" | | 1/2" | | | | | | | | | | | |
| 60B | 1 | MINI PRE-RINSE FAUCET | 1/2" | | 1/2" | | | | | | | | | | | ADD ON FAUCET: 8.91 GPM @ 60 PSI, PRESSURE: 20 - 125 PSI, TEMPERATURE: 40 F - 140 F, SPRAY VALVE: 1.42 GPM @ 60 PSI |
| 60C | 3 | DRAIN, LEVER / TWIST WASTE | | | | | | | | | 2" | | | | | |
| 61-62 | 1 | SPARE NUMBER | | | | | | | | | | | | | | |
| 63 | 1 | DISHWASHER - UNDERCOUNTER | 3/4" | 18" | | | | | | | 3/4" | | | | | P.C. TO INTERPIPE TO FLOOR SINK; 140 DEGREE HOT WATER REQUIRED FROM BUILDING WATER SUPPLY. |
| 64-69 | 1 | SPARE NUMBER | | | | | | | | | | | | | | |
| 70A | 1 | DECK MOUNT FAUCET | 1/2" | | 1/2" | | | | | | | | | | | PRESSURE: 20 - 125 PSI, TEMPERATURE: 40 °F - 140 °F, FLOW RATE: 24.60 GPM @ 60 PSI |
| 70C | 1 | DRAIN, LEVER / TWIST WASTE | | | | | | | | | 2" | | | | | |
| 71-74 | 1 | SPARE NUMBER | | | | | | | | | | | | | | |
| 76 | 1 | SPARE NUMBER | | | | | | | | | | | | | | |
| 77 | 1 | RETHERMALIZER, WATER TANK, ELECTRIC | | | | | | | | | 1/2" | | | | | P.C. TO RUN I.W. TO FLOOR SINK AS REQUIRED |
| 79-89 | 1 | SPARE NUMBER | | | | | | | | | | | | | | |
| 95-99 | 1 | SPARE NUMBER | | | | | | | | | | | | | | |
| 100 | 2 | GAS, COUNTER MODEL GRIDDLES | | | | | | | | | | | 3/4" | 108.0 Btu/h | | |
| 100A | 1 | SAFETY SYSTEM MOVEABLE GAS CONNECTOR | | | | | | | | | | | | | | |
| 101A | 1 | SAFETY SYSTEM MOVEABLE GAS CONNECTOR | | | | | | | | | | | | | | |
| 102A | 2 | EQUIPMENT STAND, REFRIGERATED BASE | | | | | | | | | 1/2" | | | | | |
| 102E | 1 | 48" REFRIGERATED BASE | | | | | | | | | 1/2" | | | | | |
| 103 | 1 | FRYER BATTERY, GAS | | | | | | | | | | | 3/4" | 160.0 Btu/h | | P.C. TO CONNECT THRU QUICK DISCONNECT HOSE. |
| 103A | 1 | SAFETY SYSTEM MOVEABLE GAS CONNECTOR | | | | | | | | | | | | | | |
| 104 | 1 | FRYER BATTERY OF 2 | | | | | | | | | | | 3/4" | 160.0 Btu/h | | P.C. TO CONNECT THRU QUICK DISCONNECT HOSE. |
| 104A | 1 | SAFETY SYSTEM MOVEABLE GAS CONNECTOR | | | | | | | | | | | | | | |
| 106-120 | 1 | SPARE NUMBER | | | | | | | | | | | | | | |
| 126-129 | 1 | SPARE NUMBER | | | | | | | | | | | | | | |
| 136-140 | 1 | SPARE NUMBER | | | | | | | | | | | | | | |
| 146-159 | 1 | SPARE NUMBER | | | | | | | | | | | | | | |
| 160 | 1 | FROZEN CUSTARD MACHINE | | | 1/2" | 12" | | | | | 1 1/2" | | | | | P.C. TO SUPPLY REDUCER , SHUT□OFF VALVE AND INTERPIPE TO EQUIPMENT FITTINGS; P.C. TO RUN I.W. TO<br>FLOOR SINK AS REQUIRED |
| 162 | 1 | FROZEN CUSTARD DIPPING CABINET | | | | | | | | | 1" | | | | | P.C. TO RUN I.W. TO FLOOR SINK AS REQUIRED |
| 163-170 | 1 | SPARE NUMBER | | | | | | | | | | | | | | |
| 171 | 2 | DIPPERWILL | | | | | | | | | | | | | | |
| 177 | 1 | SHAKE TABLE W/SINK | 1/2" | 18" | 1/2" | 18" | | | | | 2" | | | | | P.C. TO RUN I.W. TO FLOOR SINK AS REQUIRED |
| 177A | 1 | FAUCET | | | 1/2" | 18" | | | | | | | | | | PC TO INTERPIPE THIS COLD WATER CONNECTION FROM ITEM 34 WATER FILTER |
| 178-180 | 1 | SPARE NUMBER | | | | | | | | | | | | | | |
| 183 | 1 | SPARE NUMBER | | | | | | | | | | | | | | |
| 185-186 | 1 | SPARE NUMBER | | | | | | | | | | | | | | |
| 188 | 1 | DISHWASHER - UNDERCOUNTER | 3/4" | 18" | | | | | | | 3/4" | | | | | P.C. TO INTERPIPE TO FLOOR SINK; 140 DEGREE HOT WATER REQUIRED FROM BUILDING WATER SUPPLY. |
| 189-202 | 1 | SPARE NUMBER | | | | | | | | | | | | | | |
| 203 | 2 | ICE CHEST AND SODA TOWER | | | | | | | | | 3/4" | | | | | |
| 204 | 1 | TEA BREWER | | | 1/2" | 48" | | | | | | | | | | |
| 206 | 2 | BEVERAGE DISPENSER | | | | | | | | | | | | | | |
| 209-220 | 1 | SPARE NUMBER | | | | | | | | | | | | | | |
| 223 | 1 | 3-Faucet Dispensing Head and Top Mounted Drip Pan | | | | | | | | | 3/4" | | | | | |
| 224 | 1 | DRAFT BEER SYSTEM POWER PACK | | | 1" | | | | | | | | | | | P.C. TO RUN I.W. TO FLOOR SINK AS REQUIRED |
| 225-229 | 1 | SPARE NUMBER | | | | | | | | | | | | | | |
| 230 | 1 | CONDIMENT COUNTER | | | | | | | | | 3/4" | | | | | P.C. TO RUN I.W. TO FLOOR SINK AS REQUIRED; P.C. TO RUN I.W. TO FLOOR SINK AS REQUIRE |

RELEASE FOR CONSTRUCTION
AS NOTED ON PLANS REVIEW
DEVELOPMENT SERVICES
LEE'S SUMMIT, MISSOURI
03/10/2021

TriMark®
Foodservice Equipment, Supplies and Design

East : United East
505 Collins Street
P.O. Box 3505
South Attleboro, MA 02703

p. 508-399-6000

trimarkusa.com

This document contains confidential information, is an instrument of a professional service, and the property of TriMark. It shall not be used on other projects or for the extension of this project without TriMark's written approval.

Owner and all Contractors to check and verify existing dimensions and conditions in the field before starting construction and to notify TriMark of any material or detail changes.

## REVISIONS

| DATE | NO. | DESCRIPTION |
|---|---|---|
| | | |

SHAKE SHACK LEE SUMMIT

LEE SUMMIT, MO

FOOD SERVICE DRAWINGS

PROJECT
20-275

DATE
11/25/2020

SCALE

DRAWN: SMC
APPROVED: SD

SHEET
FOOD SERVICE UTILITY SCHEDULES

SHEET NUMBER:
QF102B

THIS DOCUMENT WAS ORIGINALLY PRINTED ON A 30" x 42" SIZE SHEET

11/12/2021 2:36:36 PM

K:\ENGINEERING\20-275 - SHAKE SHACK - LEE SUMMIT\K4 - LEE SUMMIT-R19.rvt

RELEASE FOR CONSTRUCTION
AS NOTED ON PLANS REVIEW
DEVELOPMENT SERVICES
LEE'S SUMMIT, MISSOURI
03/10/2021

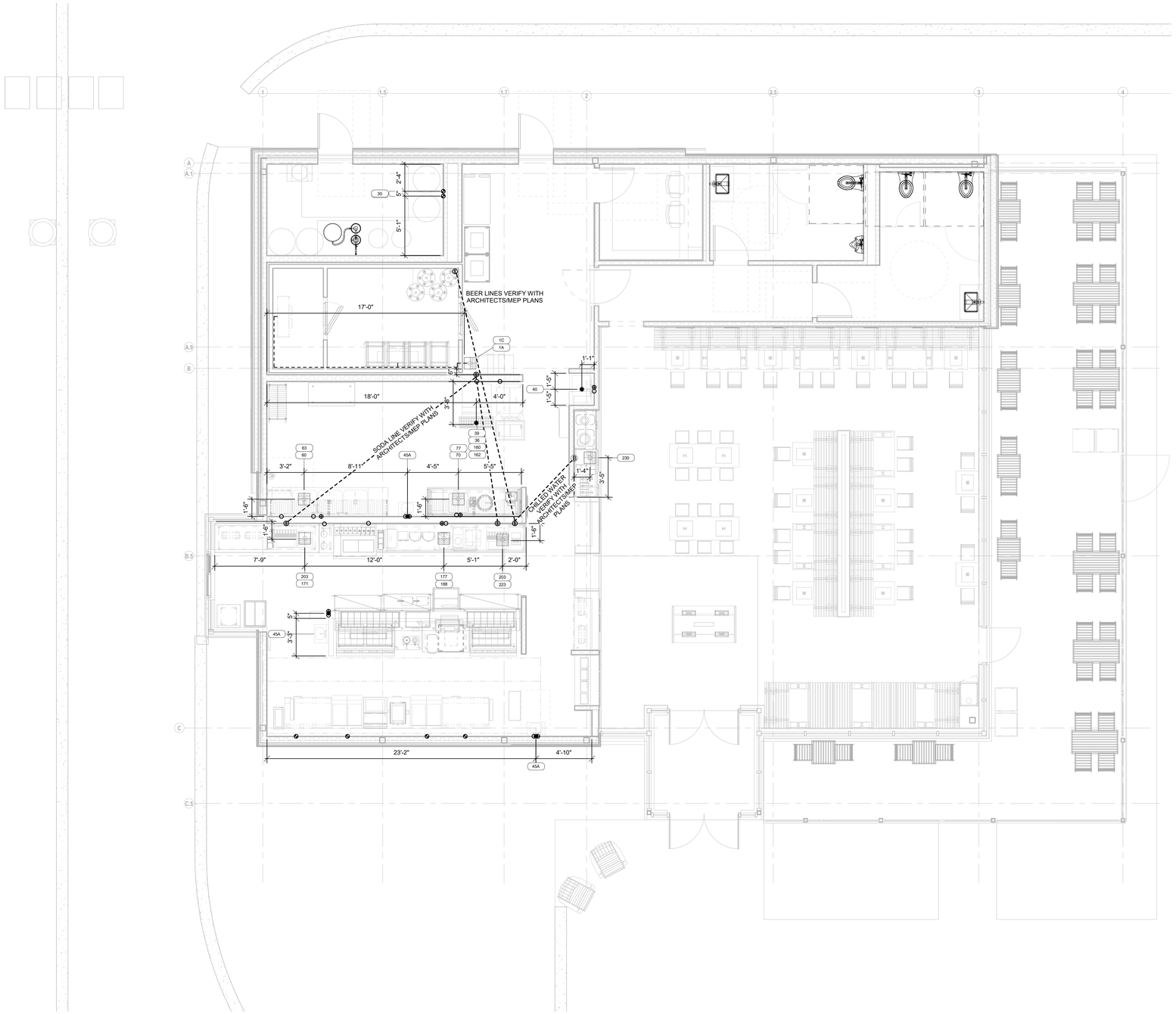


1 PLUMBING IN-SLAB ROUGH-IN PLAN
1/4" = 1'-0"

## PLUMBING LEGEND

- HOT WATER
- SOFTENED HOT WATER
- COLD WATER
- SOFTENED COLD WATER
- FILTERED WATER
- DIRECT WASTE
- INDIRECT WASTE
- FLOOR DRAIN
- FLOOR SINK - THREE-QUARTER GRATE
- FLOOR SINK - PARTIAL GRATE
- FLOOR SINK - NO GRATE
- FUNNEL FLOOR DRAIN
- HUB FLOOR DRAIN
- AREA FLOOR DRAIN - SLOPED PER CODE
- GAS DROP FROM MANIFOLD
- FIRE SUPPRESSION GAS SHUT-OFF VALVE
- CHILLED WATER
- CHILLED WATER RETURN
- STEAM SUPPLY
- CONDENSATE RETURN

## PLUMBING NOTES (DIVISION 22)

A. INSTALL KEC (SECTION 114000) FURNISHED FLOOR TROUGH(S).
B. INSTALL KEC (SECTION 114000) FURNISHED MOP SINK(S).
C. INSTALL KEC (SECTION 114000) FURNISHED FIRE SUPPRESSION SYSTEM GAS SHUT OFF VALVE. MUST BE ACCESSIBLE AND NOT CONCEALED IN WALL OR CEILING.
D. INSTALL KEC (SECTION 114000) FURNISHED QUICK DISCONNECT(S) & RESTRAINING DEVICE(S) PER MANUFACTURER'S RECOMMENDATIONS.
E. MANIFOLD DRAINS TO SINGLE CONNECTION.
F. FURNISH AND INSTALL BALL VALVE IN DRAIN LINE. VALVE TO BE IN EASILY ACCESSIBLE LOCATION.
G. PIPING FROM WATER FILTER OUTLET TO POINTS OF USE SHALL BE CONCEALED WITHIN WALLS AND CEILINGS. EXTEND DRAIN(S) TO FLOOR SINK/FLOOR DRAIN, IF REQUIRED.
H. CONNECT MIN. 110°F HOT WATER SUPPLY TO BUILT-IN OR EXTERNAL (70" RISE) BOOSTER HEATER. WHEN EXTERNAL, INSTALL TEMPERATURE/PRESSURE GAUGE(S) AS REQ'D AND EXTEND TO DISHWASHER INLET.
I. CONNECT DRAIN(S) WITH REFRIGERATION GRADE HARD COPPER USING 1" STANDOFFS. "P" TRAP DRAIN OUTSIDE WALK-IN COMPARTMENT(S). PROVIDE AND INSTALL SLEEVES THRU WALK-IN AND BUILDING WALLS FOR DRAIN LINE(S). FOAM & CAULK AROUND SLEEVES AND DRAIN LINES. WRAP WITH DRAIN LINE HEATER AND INSULATION WHERE SUBJECT TO FREEZING TEMPERATURES.
J. PROVIDE GRAY WATER AND SLURRY PIPING TO AND FROM (SECTION 114000) FURNISHED PULPER, TROUGH, AND WATER EXTRACTOR. INSTALL KEC (SECTION 114000) FURNISHED TROUGH INLET NOZZLES AND PROVIDE SHUT OFF VALVE AT EACH NOZZLE.
K. PROVIDE "TEE" IN HOT WATER LINE AND CAP FOR FUTURE INSTALLATION OF CHEMICAL DISPENSING SYSTEM BY OTHERS.
L. PROVIDE CHROME PLATED PIPE AND FITTINGS WHERE EXPOSED.
M. PROVIDE AND INSTALL 3" MIN. DRAIN LINE TO 12"X12"X10" DEEP FLOOR SINK.
N. VERIFY EXACT LOCATION AND QUANTITY OF AREA FLOOR DRAIN(S) WITH THE PLUMBING ENGINEER.

FOODSERVICE DRAWINGS INDICATE PLUMBING ROUGH-IN/CONNECTION POINTS ONLY FOR EQUIPMENT SPECIFIED UNDER THE KITCHEN EQUIPMENT (SECTION 114000) CONTRACT. ANY ADDITIONAL PLUMBING REQUIREMENTS ARE NOT INDICATED ON FOODSERVICE DRAWINGS. THE PLUMBING CONTRACTOR (DIVISION 22) SHALL FURNISH AND INSTALL PRESSURE REDUCING VALVES, FLOW CONTROLS, BACK FLOW PREVENTION, RPZ (REDUCED PRESSURE ZONE) VALVES, WATER HAMMER ARRESTOR, GATE VALVES, FOR WATER CONNECTIONS AS REQUIRED PER LOCAL CODES.


TriMark®
Foodservice Equipment, Supplies and Design

East : United East
505 Collins Street
P.O. Box 3505
South Attleboro, MA 02703

p. 508-399-6000

trimarkusa.com



This document contains confidential information, is an instrument of a professional service, and the property of TriMark. It shall not be used on other projects or for the extension of this project without TriMark's written approval.


Owner and all Contractors to check and verify existing dimensions and conditions in the field before starting construction and to notify TriMark of any material or detail changes.

## REVISIONS

| DATE | NO. | DESCRIPTION |
|---|---|---|
| | | |

# SHAKE SHACK LEE SUMMIT

LEE SUMMIT, MO

FOOD SERVICE DRAWINGS

| | |
|---|---|
| PROJECT | 20-275 |
| DATE | 11/25/2020 |
| SCALE | 1/4" = 1'-0" |
| DRAWN | SMC |
| APPROVED | SD |

SHEET

FOODSERVICE PLUMBING IN-SLAB ROUGH-IN PLAN

SHEET NUMBER:

QF201

PM 8:35:24 3/10/2021

THIS DOCUMENT WAS ORIGINALLY PRINTED ON A 30" x 42" SIZE SHEET

K:\ENGINEERING\20-275 - SHAKE SHACK - LEE SUMMIT\K4 - LEE SUMMIT-R19.rvt

RELEASE FOR CONSTRUCTION
AS NOTED ON PLANS REVIEW
DEVELOPMENT SERVICES
LEE'S SUMMIT, MISSOURI
03/10/2021

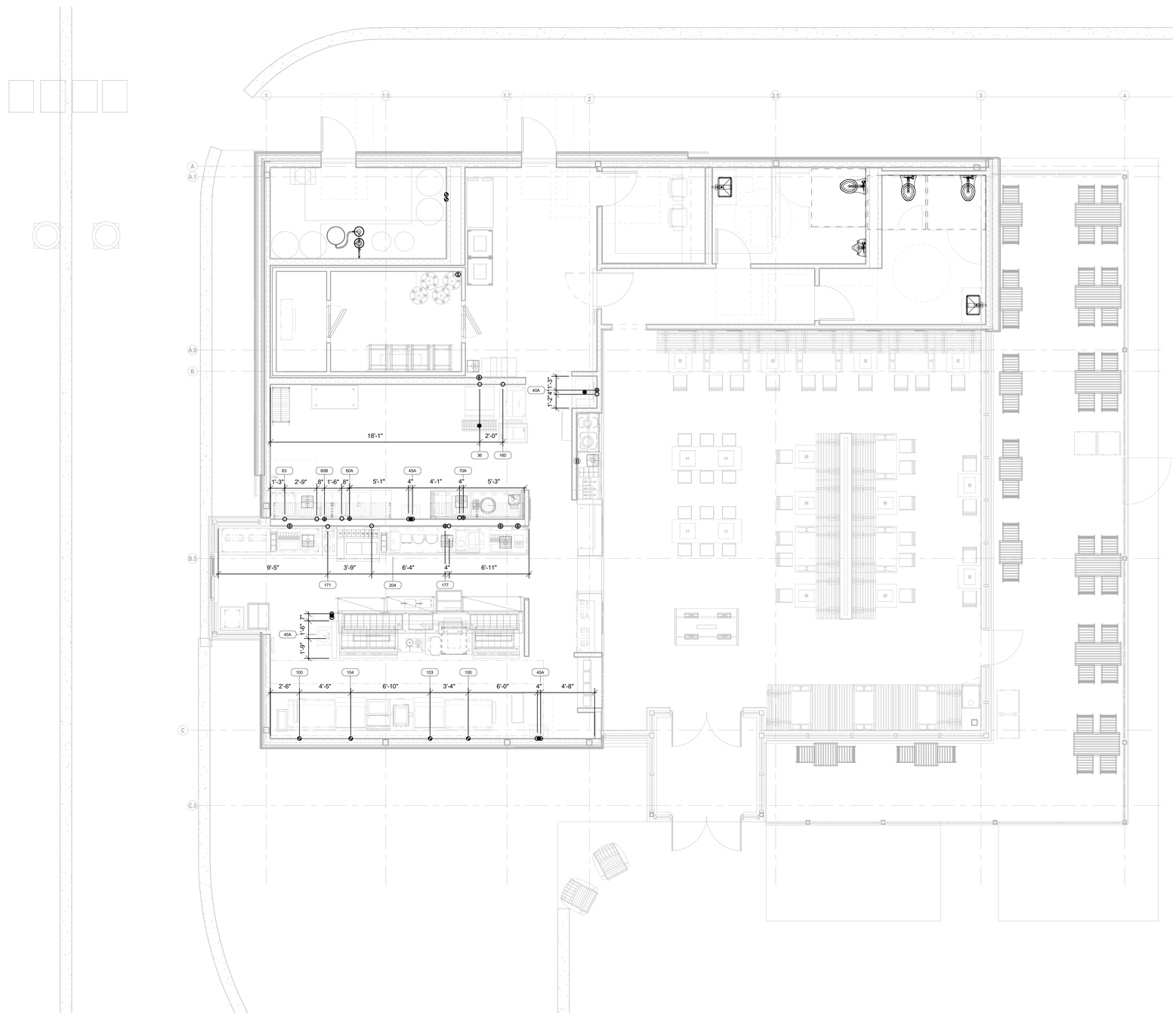


1 PLUMBING ABOVE-SLAB ROUGH-IN PLAN
1/4" = 1'-0"

## PLUMBING LEGEND

- HOT WATER
- SOFTENED HOT WATER
- COLD WATER
- SOFTENED COLD WATER
- FILTERED WATER
- DIRECT WASTE
- INDIRECT WASTE
- FLOOR DRAIN
- FLOOR SINK - THREE-QUARTER GRATE
- FLOOR SINK - PARTIAL GRATE
- FLOOR SINK - NO GRATE
- FUNNEL FLOOR DRAIN
- HUB FLOOR DRAIN
- AREA FLOOR DRAIN - SLOPED PER CODE
- GAS DROP FROM MANIFOLD
- FIRE SUPPRESSION GAS SHUT-OFF VALVE
- CS — CHILLED WATER
- CR — CHILLED WATER RETURN
- SS — STEAM SUPPLY
- CR — CONDENSATE RETURN

## PLUMBING NOTES (DIVISION 22)

1

A. INSTALL KEC (SECTION 114000) FURNISHED FLOOR TROUGH(S).
B. INSTALL KEC (SECTION 114000) FURNISHED MOP SINK(S).
C. INSTALL KEC (SECTION 114000) FURNISHED FIRE SUPPRESSION SYSTEM GAS SHUT OFF VALVE. MUST BE ACCESSIBLE AND NOT CONCEALED IN WALL OR CEILING.
D. INSTALL KEC (SECTION 114000) FURNISHED QUICK DISCONNECT(S) & RESTRAINING DEVICE(S) PER MANUFACTURER'S RECOMMENDATIONS.
E. MANIFOLD DRAINS TO SINGLE CONNECTION.
F. FURNISH AND INSTALL BALL VALVE IN DRAIN LINE. VALVE TO BE IN EASILY ACCESSIBLE LOCATION.
G. PIPING FROM WATER FILTER OUTLET TO POINTS OF USE SHALL BE CONCEALED WITHIN WALLS AND CEILINGS. EXTEND DRAIN(S) TO FLOOR SINK/FLOOR DRAIN, IF REQUIRED.
H. CONNECT MIN. 110°F HOT WATER SUPPLY TO BUILT-IN OR EXTERNAL (70° RISE) BOOSTER HEATER. WHEN EXTERNAL, INSTALL TEMPERATURE/PRESSURE GAUGE(S) AS REQ'D AND EXTEND TO DISHWASHER INLET.
I. CONNECT DRAIN(S) WITH REFRIGERATION GRADE HARD COPPER USING 1" STANDOFFS. "P" TRAP DRAIN OUTSIDE WALK-IN COMPARTMENT(S). PROVIDE AND INSTALL SLEEVES THRU WALK-IN AND BUILDING WALLS FOR DRAIN LINE(S). FOAM & CAULK AROUND SLEEVES AND DRAIN LINES. WRAP WITH DRAIN LINE HEATER AND INSULATION WHERE SUBJECT TO FREEZING TEMPERATURES.
J. PROVIDE GRAY WATER AND SLURRY PIPING TO AND FROM (SECTION 114000) FURNISHED PULPER, TROUGH, AND WATER EXTRACTOR. INSTALL KEC (SECTION 114000) FURNISHED TROUGH INLET NOZZLES AND PROVIDE SHUT OFF VALVE AT EACH NOZZLE.
K. PROVIDE "TEE" IN HOT WATER LINE AND CAP FOR FUTURE INSTALLATION OF CHEMICAL DISPENSING SYSTEM BY OTHERS.
L. PROVIDE CHROME PLATED PIPE AND FITTINGS WHERE EXPOSED.
M. PROVIDE AND INSTALL 3" MIN. DRAIN LINE TO 12"X12"X10" DEEP FLOOR SINK.
N. VERIFY EXACT LOCATION AND QUANTITY OF AREA FLOOR DRAIN(S) WITH THE PLUMBING ENGINEER.

FOODSERVICE DRAWINGS INDICATE PLUMBING ROUGH-IN/CONNECTION POINTS ONLY FOR EQUIPMENT SPECIFIED UNDER THE KITCHEN EQUIPMENT (SECTION 114000) CONTRACT. ANY ADDITIONAL PLUMBING REQUIREMENTS ARE NOT INDICATED ON FOODSERVICE DRAWINGS. THE PLUMBING CONTRACTOR (DIVISION 22) SHALL FURNISH AND INSTALL PRESSURE REDUCING VALVES, FLOW CONTROLS, BACK FLOW PREVENTION, RPZ (REDUCED PRESSURE ZONE) VALVES, WATER HAMMER ARRESTOR, GATE VALVES, FOR WATER CONNECTIONS AS REQUIRED PER LOCAL CODES.


TriMark®
Foodservice Equipment, Supplies and Design

East : United East
505 Collins Street
P.O. Box 3505
South Attleboro, MA 02703

p. 508-399-6000

trimarkusa.com



This document contains confidential information, is an instrument of a professional service, and the property of TriMark. It shall not be used on other projects or for the extension of this project without TriMark's written approval.


Owner and all Contractors to check and verify existing dimensions and conditions in the field before starting construction and to notify TriMark of any material or detail changes.

## REVISIONS

| DATE | NO. | DESCRIPTION |
|---|---|---|
| | | |

# SHAKE SHACK LEE SUMMIT

LEE SUMMIT, MO

FOOD SERVICE DRAWINGS

| | |
|---|---|
| PROJECT | 20-275 |
| DATE | 11/25/2020 |
| SCALE | 1/4" = 1'-0" |
| DRAWN | SMC |
| APPROVED | SD |

SHEET

FOODSERVICE PLUMBING ABOVE SLAB ROUGH-IN PLAN

SHEET NUMBER:

QF202

11/1/2021 3:24:38 PM

THIS DOCUMENT WAS ORIGINALLY PRINTED ON A 30" x 42" SIZE SHEET

K:\ENGINEERING\20-275 - SHAKE SHACK - LEE SUMMIT\K4 - LEE SUMMIT-R19.rvt

RELEASE FOR CONSTRUCTION
AS NOTED ON PLANS REVIEW
DEVELOPMENT SERVICES
LEE'S SUMMIT, MISSOURI
03/10/2021

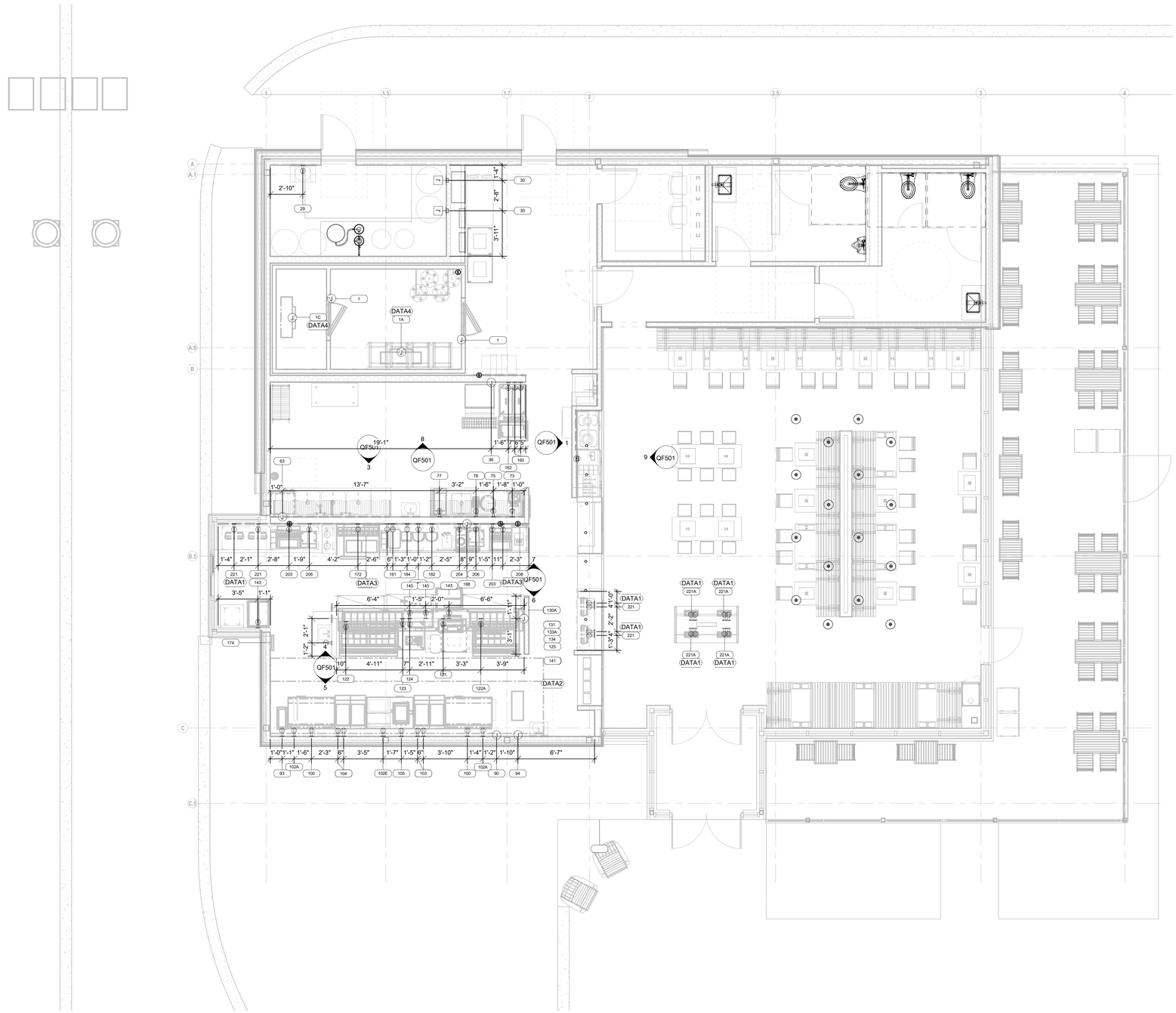


1 ELECTRICAL ROUGH-IN PLAN
1/4" = 1'-0"

## ELECTRICAL LEGEND

- DUPLEX RECEPTACLE
- WEATHERPROOF RECEPTACLE (WP)
- SINGLE RECEPTACLE
- SPECIAL PURPOSE RECEPTACLE
- QUAD RECEPTACLE
- FLUSH FLOOR MOUNT RECEPTACLE
- JUNCTION BOX - FLOOR/CLG MOUNTED
- JUNCTION BOX - WALL MOUNTED
- SWITCH (S)
- DATA CONNECTION
- MANUAL FIRE PULL STATION (F)
- DROP CORD MOUNTED FROM CEILING (CLG)
- CONDUIT STUB LOCATION (C)
- DEFROST TIME CLOCK (T)
- DISCONNECT
- LIGHT - RECTANGULAR
- LIGHT - ROUND
- MOTOR
- EXHAUST HOOD SENSOR (SNSR)
- TEMPERATURE SENSOR (TEMP)
- PLUG MOLD

## ELECTRICAL NOTES (DIVISION 26)

A. FURNISH AND INSTALL CORD AND PLUG SET(S).
B. FURNISH AND INSTALL DEVICE & COVER IN KEC (SECTION 114000) FURNISHED JUNCTION BOX.
C. FURNISH AND INSTALL JUNCTION BOX(S), DEVICE(S), AND COVER(S) IN KEC (SECTION 114000) FURNISHED EQUIPMENT AS LOCATED BY MANUFACTURER. INTERWIRE SECTIONS & DEVICES AS REQ'D.
D. CONNECT THRU DISPOSER CONTROL TO SOLENOID VALVE AND MOTOR.
E. CONNECT FROM KEC (SECTION 114000) FURNISHED ICE MACHINE TO REMOTE CONDENSER AS REQ'D.
F. CONNECT THRU KEC (SECTION 114000) FURNISHED AIR CURTAIN TO DOOR ACTIVATED MICROWSITCH.
G. CONNECT THRU KEC (SECTION 114000) FURNISHED REMOTE CONTROL SWITCH(ES).
H. FURNISH AND INSTALL SWITCH. CONNECT TO LIGHTS FURNISHED AND INSTALLED BY KEC (SECTION 114000).
I. CONNECT POWER SUPPLY TO KEC (SECTION 114000) FURNISHED LOAD CENTER. COUNTER SHALL BE PREWIRED AND SHIPPED IN SECTIONS. CONNECT BETWEEN SECTIONS.
J CONNECT TO KEC (SECTION 114000) FURNISHED JUNCTION BOX AT WALK-IN DOOR ASSEMBLY. LIGHT FIXTURE AT DOOR IS PREWIRED TO FACTORY MOUNTED LIGHT SWITCH. MOUNT ADDITIONAL KEC (SECTION 114000) FURNISHED LIGHTS WHERE INDICATED AND CONNECT TO SWITCH. CONDUIT SHALL BE INSTALLED ABOVE WALK-IN AND NOT EXPOSED ON INTERIOR UNLESS REQ'D. CONDUIT PENETRATING WALK-IN SHALL BE NON-METALLIC OR PVC.
K CONNECT KEC (SECTION 114000) FURNISHED TEMPERATURE ALARM SYSTEM. COORDINATE WITH BUILDING SYSTEMS.
L. INSTALL KEC (SECTION 114000) FURNISHED DEFROST TIMER. CONNECT THRU TIMER TO EVAPORATOR COIL.
M. CONNECT FROM KEC (SECTION 114000) FURNISHED CONDENSING UNIT, THRU DEFROST TIMER, TO EVAPORATOR COIL.
N. FURNISH AND INSTALL NEMA RECEPTACLE WITH WEATHER COVER BEHIND FREEZER EVAPORATOR COIL FOR DRAIN LINE HEATER.
O. CONNECT EXHAUST FAN THRU FAN CONTROL CONTACTS IN DISHWASHER.
P. CONNECT TABLE LIMIT SWITCH TO DRY CONTACT ON KEC (SECTION 11400) FURNISHED DISH MACHINE.
Q. CONNECT DRAIN WATER TEMPERING DEVICE PER MANUFACTURER'S RECOMMENDATIONS.
R. CONNECT TO EXHAUST HOOD LIGHT(S), CONTROL(S), AND EXHAUST FAN(S)/MAKE-UP AIR UNIT(S) AS REQ'D. INTERWIRE HOOD SECTIONS, MOTOR STARTER(S)/DRIVES, AND OVERLOAD PROTECTION AS REQ'D. INSTALL COMPONENTS AND SENSORS SHIPPED LOOSE. REFER TO SYSTEM SHOP DRAWING(S) FOR ADDITIONAL SCHEMATICS.
S. CONNECT 120 VOLT FROM KEC (SECTION 114000) FURNISHED MICRO SWITCH IN FIRE SUPPRESSION SYSTEM CONTROL PANEL TO SHUNT TRIP BREAKER(S) FOR SHUT DOWN OF POWER TO ALL ELECTRICAL DEVICES UNDER HOOD(S) AND 18" OUTSIDE PERIMETER OF HOOD(S). CONNECT FROM MICRO SWITCH TO DIVISION 26 FURNISHED RELAY(S) OR SWITCHES FOR SHUT DOWN/CONTROL OF HOOD LIGHTS, MAKE-UP AIR FAN, AND FIRE ALARM SYSTEM.
T. CONNECT 120 VOLT FROM KEC (SECTION 114000) FURNISHED MICRO SWITCH IN FIRE SUPPRESSION SYSTEM CONTROL PANEL THRU MANUAL RESET RELAY TO ELECTRIC GAS VALVE. PROVIDE CONTROLINTERWIRING BETWEEN THE FIRE SUPPRESSION SYSTEM AND ASSOCIATED ELECTRICAL GAS SOLENOID VALVES, RESET RELAYS, AND PULL STATIONS AS REQ'D.
U. FURNISH AND INSTALL CONCEALED CONDUIT AND RECESSED OCTAGONAL JUNCTION BOX IN WALL AT 42"-48" AFF FOR REMOTE MANUAL PULL STATION(S). COORDINATE LOCATION(S) WITH FIRE SUPPRESSION SYSTEM CONTRACTOR AND AUTHORITIES HAVING JURISDICTION PRIOR TO ROUGH-IN.
V. PROVIDE 3/4" EMPTY CONDUIT AND JUNCTION BOX FOR DATA CONNECTION. VERIFY EXACT REQUIREMENTS AND TERMINATION POINTS PRIOR TO ROUGH-IN.

FOODSERVICE DRAWINGS INDICATE ELECTRICAL ROUGH-IN/CONNECTION POINTS ONLY FOR EQUIPMENT SPECIFIED UNDER THE KITCHEN EQUIPMENT (SECTION 114000) CONTRACT. ANY ADDITIONAL ELECTRICAL REQUIREMENTS ARE NOT INDICATED ON FOODSERVICE DRAWINGS.

TriMark®
Foodservice Equipment, Supplies and Design

East : United East
505 Collins Street
P.O. Box 3505
South Attleboro, MA 02703

p. 508-399-6000

trimarkusa.com

This document contains confidential information, is an instrument of a professional service, and the property of TriMark. It shall not be used on other projects or for the extension of this project without TriMark's written approval.

Owner and all Contractors to check and verify existing dimensions and conditions in the field before starting construction and to notify TriMark of any material or detail changes.

## REVISIONS

| DATE | NO. | DESCRIPTION |
|---|---|---|
| | | |

# SHAKE SHACK LEE SUMMIT

LEE SUMMIT, MO

FOOD SERVICE DRAWINGS

| | |
|---|---|
| PROJECT | 20-275 |
| DATE | 11/25/2020 |
| SCALE | 1/4" = 1'-0" |
| DRAWN | SMC |
| APPROVED | SD |

SHEET
FOODSERVICE ELECTRICAL ROUGH-IN PLAN

SHEET NUMBER:
QF301

THIS DOCUMENT WAS ORIGINALLY PRINTED ON A 30" x 42" SIZE SHEET

PM 06:14:2 2020/11/1

K:\ENGINEERING\20-275 - SHAKE SHACK - LEE SUMMIT\K4 - LEE SUMMIT-R19.rvt

RELEASE FOR CONSTRUCTION
AS NOTED ON PLANS REVIEW
DEVELOPMENT SERVICES
LEE'S SUMMIT, MISSOURI
03/10/2021

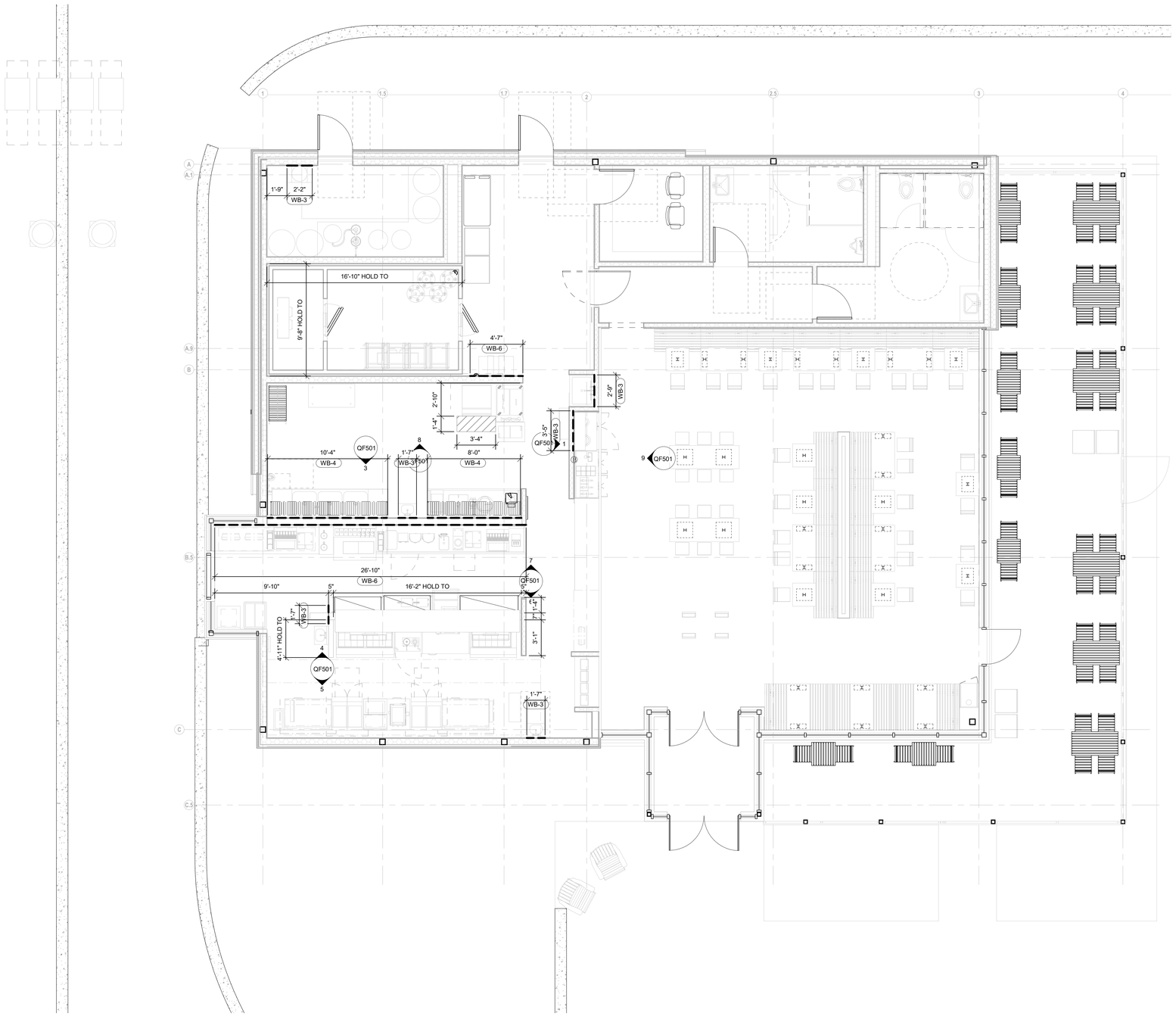


1 SPECIAL CONDITIONS PLAN
1/4" = 1'-0"

## SPECIAL CONDITIONS LEGEND

| | |
|---|---|
| (B) | BEVERAGE CONDUIT STUB UP |
| —R— | REFRIGERATION LINE SET |
| - - - - - - | WALL BLOCKING |
| — · · — · · — | ENGINEERED STRUCTURAL SUPPORT |
| ▨ | NON COMBUSTIBLE WALL |

## SPECIAL CONDITIONS NOTES

A. BUILDING FLOOR BENEATH WALK-IN MUST BE LEVEL WITHIN PLUS OR MINUS 1/8". REFER TO DETAIL #X/QFXXX
B. GENERAL CONTRACTOR AND/OR SUBDIVISIONS SHALL PROVIDE X" DEEP FLOOR DEPRESSION FROM TOP OF FINISHED FLOOR FOR WALK-IN. REFER TO DETAIL #X/QFXXX.
C. GENERAL CONTRACTOR AND/OR SUBDIVISIONS SHALL PROVIDE PRESSURE TREATED WOOD THERMAL BARRIER CENTERED BENEATH WALK-IN WALLS. REFER TO DETAIL #X/QFXXX.
D. GENERAL CONTRACTOR AND/OR SUBDIVISIONS SHALL PROVIDE INSULATED FLOOR SLAB BENEATH WALK-IN. REFER TO DETAIL #X/QFXXX.
E. GENERAL CONTRACTOR AND/OR SUBDIVISIONS SHALL PROVIDE X" DEEP FLOOR DEPRESSION FROM FINISHED FLOOR FOR INSTALLATION OF FLOOR TROUGH BY PLUMBING CONTRACTOR (DIVISION 26). GENERAL CONTRACTOR TO BACK-FILL WITH GROUT. REFER TO DETAIL #X/QFXXX.
F. GENERAL CONTRACTOR AND/OR SUBDIVISIONS SHALL FURNISH AND INSTALL ROOF PAD FOR KEC (SECTION 114000) FURNISHED REFRIGERATION RACK.
G. GENERAL CONTRACTOR AND/OR SUBDIVISIONS SHALL FURNISH AND INSTALL CONCRETE PAD FOR KEC (SECTION 114000) FURNISHED REFRIGERATION RACK/CONDENSING UNITS.
H. REFRIGERATION CONTRACTOR SHALL FURNISH AND COORDINATE LOCATION OF EQUIPMENT RAILS AND PIPE CURBS FOR ROOFTOP CONDENSING UNIT(S).
I. HVAC/MECHANICAL CONTRACTOR (DIVISION 23) SHALL INSTALL KEC (SECTION 114000) FURNISHED RAILS & ROOF CURBS FOR EXHAUST FAN(S) AND MAKE-UP AIR UNIT(S).
J. KEC (SECTION 114000) SHALL FURNISH AND INSTALL RAILS AND ROOF CURBS FOR EXHAUST FAN(S) AND MAKE-UP AIR UNIT(S). GENERAL CONTRACTOR AND/OR SUBDIVISIONS SHALL FLASH-IN RAILS AND ROOF CURBS.
K. GENERAL CONTRACTOR AND/OR SUBDIVISIONS SHALL PROVIDE STRUCTURAL REINFORCEMENT ABOVE CEILING AS REQ'D FOR KEC (SECTION 114000) FURNISHED EQUIPMENT.
L. GENERAL CONTRACTOR AND/OR SUBDIVISIONS SHALL PROVIDE MINIMUM VERTICAL CLEARANCE OF X'-X" AT WALK-IN
M. GENERAL CONTRACTOR AND/OR SUBDIVISIONS SHALL PROVIDE MINIMUM VERTICAL CLEARANCE OF X'-X" AT EXHAUST HOOD.
N. GENERAL CONTRACTOR AND/OR SUBDIVISIONS SHALL PROVIDE MINIMUM VERTICAL CLEARANCE OF X'-X" AT ICE MAKER.

## WALL BLOCKING NOTES (DIVISION 6)

| | |
|---|---|
| WB-1 | 12" AFF TO 24" AFF FOR RESTRAINING DEVICE |
| WB-2 | 18" AFF TO 30" AFF FOR WATER FILTER |
| WB-3 | 30" AFF TO 54" AFF FOR HAND SINK |
| WB-4 | 48" AFF TO 78" AFF FOR WALL SHELF/MOP RACK/POT FILLER |
| WB-5 | 48" AFF TO 78" AFF FOR 2-TIER WALL SHELVES |
| WB-6 | 48" AFF TO 84" AFF FOR POT RACK |
| WB-7 | 54" AFF TO 90" AFF FOR WALL CABINET/SALAMANDER |
| WB-8 | 60" AFF TO 78" AFF FOR WATER FILTER |
| WB-9 | 66" AFF TO 84" AFF FOR POT RACK |
| WB-10 | 72" AFF TO CEILING FOR FIRE SUPPRESSION/HOOD CONTROL |
| WB-11 | 78" AFF TO 114" AFF FOR EXHAUST HOOD |
| WB-12 | 84" AFF TO 102" AFF FOR WATER FILTER/AIR CURTAIN |
| WB-13 | 102" AFF TO 114" AFF FOR CLG MOUNT AIR CURTAIN |
| WB-14 | VERIFY WITH ARCHITECT FOR BACK BAR SUPERSTRUCTURE |

NOTE: ALL WALL BLOCKING TO BE 5/8" FIRE RATED/TREATED PLYWOOD MINIMUM OR 18 GAUGE METAL WHERE REQUIRED

TriMark®
Foodservice Equipment, Supplies and Design

East : United East
505 Collins Street
P.O. Box 3505
South Attleboro, MA 02703

p. 508-399-6000

trimarkusa.com

This document contains confidential information, is an instrument of a professional service, and the property of TriMark. It shall not be used on other projects or for the extension of this project without TriMark's written approval.

Owner and all Contractors to check and verify existing dimensions and conditions in the field before starting construction and to notify TriMark of any material or detail changes.

## REVISIONS

| DATE | NO. | DESCRIPTION |
|---|---|---|
| | | |

# SHAKE SHACK LEE SUMMIT

LEE SUMMIT, MO

FOOD SERVICE DRAWINGS

| | |
|---|---|
| PROJECT | 20-275 |
| DATE | 11/25/2020 |
| SCALE | 1/4" = 1'-0" |
| DRAWN | SMC |
| APPROVED | SD |

SHEET

FOODSERVICE SPECIAL CONDITIONS PLAN

SHEET NUMBER:

QF401

11/17/2021 3:24:41 PM

THIS DOCUMENT WAS ORIGINALLY PRINTED ON A 30" x 42" SIZE SHEET

K:\ENGINEERING\20-275 - SHAKE SHACK - LEE SUMMIT\K4 - LEE SUMMIT-R19.rvt

RELEASE FOR CONSTRUCTION
AS NOTED ON PLANS REVIEW
DEVELOPMENT SERVICES
LEE'S SUMMIT, MISSOURI

03/10/2021

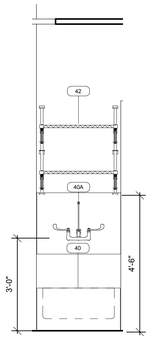


1 MOP SINK / LOCKERS / BIB
1/2" = 1'-0"

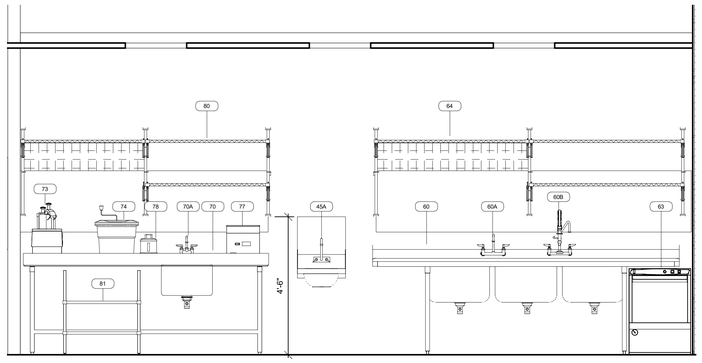


3 PREP TABLE / 3 COMP SINK
1/2" = 1'-0"

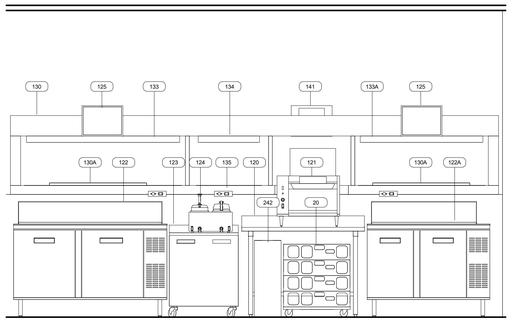


4 COOK LINE
1/2" = 1'-0"

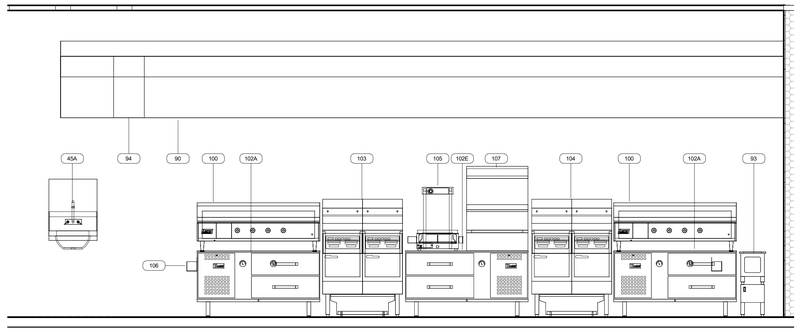


5 PREP LINE
1/2" = 1'-0"

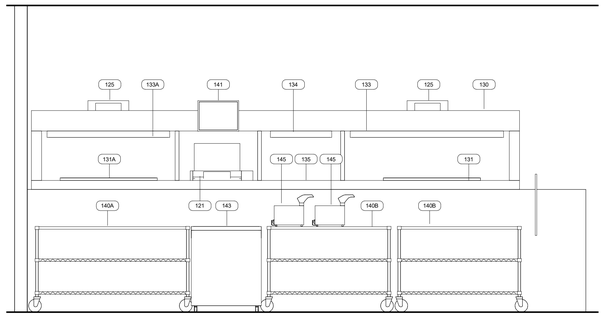


6 EXPO
1/2" = 1'-0"

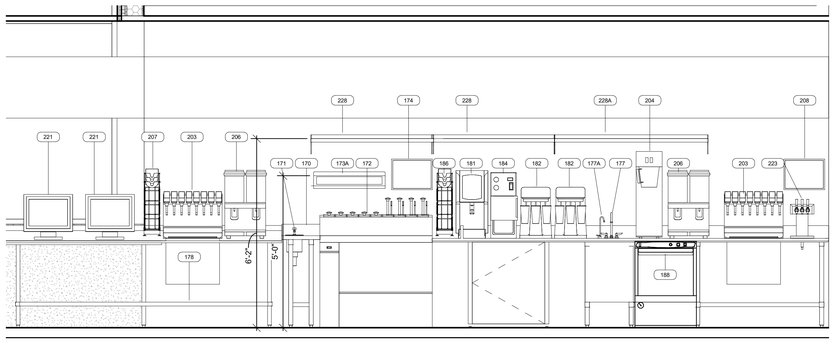


7 FRONT COUNTER
1/2" = 1'-0"

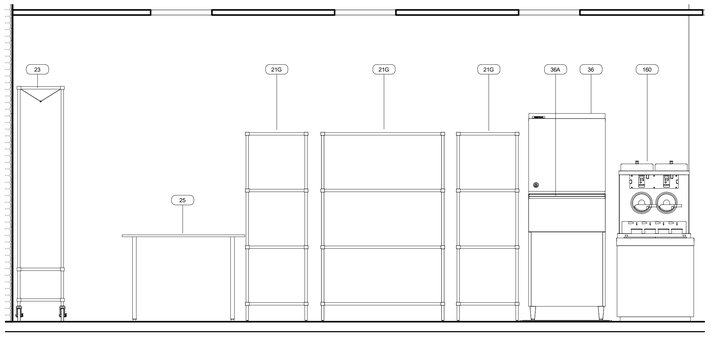


8 BEVERAGE STATION
1/2" = 1'-0"

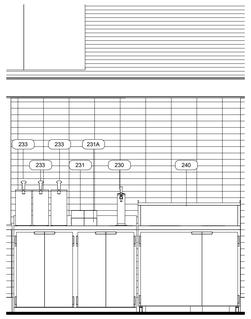


9 CONDIMENT STATION
1/2" = 1'-0"

TriMark®
Foodservice Equipment, Supplies and Design


East : United East
505 Collins Street
P.O. Box 3505
South Attleboro, MA 02703

p. 508-399-6000

trimarkusa.com



This document contains confidential information, is an instrument of a professional service, and the property of TriMark. It shall not be used on other projects or for the extension of this project without TriMark's written approval.


Owner and all Contractors to check and verify existing dimensions and conditions in the field before starting construction and to notify TriMark of any material or detail changes.

## REVISIONS

| DATE | NO. | DESCRIPTION |
|---|---|---|
| | | |

# SHAKE SHACK LEE SUMMIT

LEE SUMMIT, MO

FOOD SERVICE DRAWINGS

| | |
|---|---|
| PROJECT: 20-275 | |
| DATE: 11/25/2020 | |
| SCALE: 1/2" = 1'-0" | |
| DRAWN: SMC | APPROVED: SD |

SHEET: FOODSERVICE ELEVATIONS

SHEET NUMBER:

QF501

THIS DOCUMENT WAS ORIGINALLY PRINTED ON A 30" x 42" SIZE SHEET

11/1/2021 3:24:43 PM

K:\ENGINEERING\20-275 - SHAKE SHACK - LEE SUMMIT\K4 - LEE SUMMIT-R19.rvt

RELEASE FOR CONSTRUCTION
AS NOTED ON PLANS REVIEW
DEVELOPMENT SERVICES
LEE'S SUMMIT, MISSOURI
03/10/2021

| SHEET NUMBER | SHEET NAME |
|---|---|
| F001 | FIRE PROTECTION ABBREVIATIONS AND SYMBOLS |
| F101 | FIRE PROTECTION PLAN |
| F501 | FIRE PROTECTION DETAILS |
| F590 | FIRE PROTECTION SPECIFICATIONS |
| F591 | FIRE PROTECTION SPECIFICATIONS |

| DESCRIPTION | FURNISHED | | | INSTALLED | | | REMARKS |
|---|---|---|---|---|---|---|---|
| | GENERAL CONTRACTOR | OWNER | LANDLORD | GENERAL CONTRACTOR | OWNER | LANDLORD | |
| DIVISION 21: FIRE SUPPRESSION | | | | | | | |
| 21.1 FIRE SUPPRESSION IDENTIFICATION | | | | | | | |
| 21.1.1 PIPING SYSTEM IDENTIFICATION | X | | | X | | | |
| 21.1.2 VALVE TAGS | X | | | X | | | |
| 21.2 SPRINKLER STANDPIPE | X | | | X | | | |
| 21.2.1 BACKFLOW PREVENTER | X | | | X | | | |
| 21.2.2 ISOLATION VALVE | X | | | X | | | |
| 21.2.3 ADDITIONAL APPURTEANCES (E.G. TAMPER SWITCH) | X | | | X | | | |
| 21.3 AUTOMATIC SPRINKLER SYSTEM | | | | | | | |
| 21.3.1 SYSTEM ENGINEERING (E.G. STAMPED PLANS AND CALUCATIONS) | X | | | X | | | |
| 21.3.2 SPRINKLER COVERAGE | X | | | X | | | |
| 21.3.3 SPRINKLER GRID APPURTENANCES (E.G. AIR VALVES AND DRAINS) | X | | | X | | | |
| 21.4 ANSUL FIRE PROTECTION SYSTEM | | X | | | X | | GENERAL CONTRACTOR TO SCOPE OF WORK REFERENCED IN DIVISION 23 |
| DIVISION 28: ELECTRONIC SAFETY AND SECURITY | | | | | | | |
| 28.4 FIRE ALARM SYSTEM | | | | | | | |
| 28.4.1 SYSTEM ENGINEER | X | | | X | | | |
| 28.4.2 CONNECTION TO BASE BUILDING SYSTEM | X | | | X | | | |
| 28.4.3 DEVICES | | | X | | | X | |

## SYMBOLS

### FIRE PROTECTION

| SYMBOL | DESCRIPTION | SYMBOL | DESCRIPTION | SYMBOL | DESCRIPTION |
|---|---|---|---|---|---|
| | ELEVATION CHANGE | | BALL VALVE | | FIRE DEPARTMENT CONNECTION |
| | PIPE CAP | | CHECK VALVE | FH | FIRE HYDRANT |
| | PIPE COUPLING | | PRESSURE REGULATING VALVE (PRV) | FHV | FIRE HOSE VALVE |
| | HYDRAULIC NODE POINT | | | C.I. | CAST IRON |
| | | | POST INDICATOR VALVE | I.E. | INVERT ELEVATION |
| A.F.F. | FINISHED CEILING ELEVATION | | RISER NIPPLE (RN) | EX | EXISTING |
| | | | VALVE IN RISE | FDC | FIRE DEPARTMENT CONNECTION |

## SPRINKLER HEAD TYPES

| MANUF. | MODEL | TYPE | ORIFICE | "K" FACTOR | TEMP. (DEG. F.) | SYMBOL | FINISH | ESCUTCHEON |
|---|---|---|---|---|---|---|---|---|
| VIKING | VK462 | QRSS PEND | 1/2 | 5.6 | 175° | | WHITE | CONCEALED |
| VIKING | VK300 | QRSS UPR | 1/2 | 5.6 | 175° | | BRASS | N/A |
| VIKING | VK176 | DRY PEND | 1/2 | 5.6 | 175° | | WHITE | RECESSED |

## FIRE ALARM SYMBOL LEGEND (SOME MAY NOT BE USED)

| SYMBOL | DESCRIPTION | SYMBOL | DESCRIPTION |
|---|---|---|---|
| FACP | FIRE ALARM CONTROL PANEL | F | FIRE ALARM BELL |
| EVAC | FIRE ALARM VOICE EVACUATION PANEL | F | FIRE ALARM HORN, WALL MOUNTED |
| FAA | FIRE ALARM REMOTE ANNUNCIATOR | F | FIRE ALARM SPEAKER, WALL MOUNTED |
| NAC | FIRE ALARM NOTIFICATION APPLIANCE POWER SUPPLY | | FIRE ALARM STROBE, WALL MOUNTED |
| FATC | FIRE ALARM TERMINAL CABINET | | FIRE ALARM COMBINATION HORN AND STROBE, WALL MOUNTED |
| TPR | FIRE ALARM TRANSPONDER | | FIRE ALARM COMBINATION SPEAKER AND STROBE, WALL MOUNTED |
| FT | FIRE ALARM CODED TRANSMITTER | F C | FIRE ALARM HORN, CEILING MOUNTED |
| DK | FIRE ALARM DRILL KEY SWITCH | F C | FIRE ALARM SPEAKER, CEILING MOUNTED |
| F | FIRE ALARM MANUAL PULLSTATION | C | FIRE ALARM STROBE, CEILING MOUNTED |
| | AUTOMATIC SMOKE DETECTOR, WALL MOUNTED | C | FIRE ALARM COMBINATION HORN AND STROBE, CEILING MOUNTED |
| | AUTOMATIC SMOKE DETECTOR, CEILING MOUNTED | C | FIRE ALARM COMBINATION SPEAKER AND STROBE, CEILING MOUNTED |
| D | AUTOMATIC SMOKE DETECTOR, DUCT MOUNTED, AND FIRE ALARM RELAY (INTEGRAL OR FIELD-INSTALLED) | | FIRE ALARM MINIATURE HORN AND STROBE, WALL MOUNTED |
| RTS | DUCT SMOKE DETECTOR REMOTE TEST SWITCH | C | FIRE ALARM MINIATURE HORN AND STROBE, CEILING MOUNTED |
| | AUTOMATIC HEAT DETECTOR, WALL MOUNTED | CZAM | FIRE ALARM CONTROL ZONE ADDRESSABLE MODULE |
| | AUTOMATIC HEAT DETECTOR, CEILING MOUNTED | MZAM | FIRE ALARM MONITOR ZONE ADDRESSABLE MODULE |
| BT | AUTOMATIC SMOKE DETECTOR, BEAM TRANSMITTER, WALL MOUNTED | IAM | FIRE ALARM INDIVIDUAL ADDRESSABLE MODULE |
| BT | AUTOMATIC SMOKE DETECTOR, BEAM TRANSMITTER, CEILING MOUNTED | ZAM | FIRE ALARM ZONE ADDRESSABLE MODULE |
| BR | AUTOMATIC SMOKE DETECTOR BEAM RECEIVER, WALL MOUNTED | MM | FIRE ALARM MONITOR MODULE |
| BR | AUTOMATIC SMOKE DETECTOR, BEAM RECEIVER, CEILING MOUNTED | CM | FIRE ALARM CONTROL MODULE |
| SA | AUTOMATIC SMOKE ALARM, WALL MOUNTED | EOL | END OF LINE RESISTOR |
| SA | AUTOMATIC SMOKE ALARM, CEILING MOUNTED | F | FIRE SPRINKLER FLOW SWITCH |
| UV | FLAME DETECTOR, ULTRAVIOLET TYPE | F | FIRE SPRINKLER TAMPER SWITCH AND CORROSION MONITORING SYSTEM SUPERVISORY CONNECTION |
| IR | FLAME DETECTOR, INFRARED TYPE | PIV | FIRE SPRINKLER ELECTRONICALLY SUPERVISED POST INDICATOR VALVE |
| VR | FLAME DETECTOR, VISIBLE RADIATION TYPE | | FIRE ALARM MAGNETIC DOOR HOLDER |
| HFSS | HOOD FIRE SUPPRESSION SYSTEM | | FIRE FIGHTER'S PHONE |
| M | HOOD FIRE SUPPRESSION SYSTEM MANUAL PULLSTATION | K | FIRE ALARM KEY REPOSITORY (KNOX BOX) |
| EX | EXISTING FIRE ALARM SYSTEM COMPONENT | R | FIRE ALARM RELAY |
| RR | RELOCATED AND REUSED FIRE ALARM SYSTEM COMPONENT | J | FIRE ALARM SYSTEM JUNCTION BOX |
| | FUSE DISCONNECT SWITCH | M | HVAC UNIT MOTOR SHUTDOWN |

## CX SUBMITTAL MATRIX

GENERAL CONTRACTORS TO ALSO REVIEW ARCHITECTRUAL SPECIFICATIONS AS NOTED IN PLANS IN PLAN SECTION 700 OF THE ARCHITECTURAL PACKAGE FOR REQUIRED SUBMITTALS THAT MIGHT NOT BE LISTED BELOW.

| SUBMITTAL DECRIPTION | Required Review Time (Business Days) | Architect of Record | Smoke Control Vendor | Commissioning Agent | Physical Sample Required | Submittal for Review/ Approval | Submittal for Record Only |
|---|---|---|---|---|---|---|---|
| Anchor Bolts Shops | 5 | X | | | | X | |
| ATAS-Detailed Shop DWGS(Submitted by Owner Vendor to Owner/AOR prior to const.) | 5 | X | | | | | X |
| Concrete Mix Design | 5 | X | | | | X | |
| Construction Prefunctional Checklists | 5 | X | | X | | | X |
| Decorative Metal Shop Drawings | 5 | X | | | | | |
| Diffusers, Grills & Registers | 5 | X | | | | X | |
| Doors, Frames & Hardware | 7 | X | | | | X | |
| Ductwork Layout (if there are signifcant changes in field) | 5 | X | | X | | X | |
| Electrical Distribution Equipment | 5 | X | | X | | | |
| Elevator & Vertical Transportation Shop Drawings | 5 | X | | | | | X |
| Epoxy Floor | 5 | X | | | | | X |
| Fire Alarm Shop Drawings & Device Cut Sheets | 5 | x | | X | | X | |
| Fire Sprinkler Shop Drawings, Hydraulic Calculations & Device Cut Sheets | 5 | x | | X | | | X |
| HVAC Equipment(if Carrier - Submitted by Owner Vendor to Owner/AOR prior to const.) | 5 | x | | X | | X | |
| Light Fixtures(Submitted by Owner Vendor to Owner/AOR prior to construction) | 5 | X | | X | | X | |
| MEP Tests, Start-Up, and Programming Reports | 5 | X | | X | | X | |
| Millwork - Material Submittals (if differs from spec) | 5 | X | X | | X | | |
| Millwork - Shop Drawings (custom items & design features only) | 5 | X | | | | | |
| Restroom Partitions | 5 | X | | | | X | |
| Plumbing Fixtures | 5 | X | | X | | X | |
| Railing Shop Drawings | 5 | X | | | | | X |
| Rebar | 5 | X | | | | X | |
| Stair Shop Drawings | 5 | X | | | | | X |
| Structural Steel Shop Drawings | 7 | X | | | | X | |
| Storefront - product data Submittal (if different from specified) | 5 | X | | | | | |
| Storefront - Shop Drawings | 5 | X | | | | | |
| Tile (if differs from spec) | 5 | X | | | | X | |
| Window Film | 5 | X | | | | | |

## CX MATRIX

| Division | System / Equipment | Flush & Clean / Sanitize | Pneumatic Pressure Test | Hydrostatic Pressure Test | Duck Leak Test | Insulation Resistance (Megger) Test | Current Testing | Startup | Contractor Prefunctional Checklists | Functional Performance Test (Validation) |
|---|---|---|---|---|---|---|---|---|---|---|
| 21 | Fire Suppression Clean Agent System | X | X | | | | | | X | X |
| 21 | Fire Suppression Wet Sprinkler System | X | | X | | | | | X | X |
| 28 | Fire Alarm and Clean Agent System Devices | | | | | | | | X | X |

## CxA SCOPE OF WORK

Division 21 - Fire Protection Commissioning Requirements

Scope of Work

- Verify the fire suppression system, equipment, instrumentation, and control systems have been completed and calibrated according to the Contract Documents and approved submittals.
- Validate the system is operable by setting the fire suppression system into operating mode to be tested according to approved test procedures (for example; normal shutdown, normal auto position, normal manual position, alarm conditions, etc.).

Prefunctional Construction Checklists

- Fire suppression system piping and appurtenances.
- Clean agent system piping and appurtenances.
- Fire alarm system and devices.


Bergmeyer
www.bergmeyer.com
LA - 800 South Figueroa St. Suite 1100, Los Angeles, CA 90017 212.337.1090
BOS - 51 Sleeper St. 4th Floor, Boston, MA 02210 617.542.1025

CONSULTANTS:
Schnackel engineers
800-581-0963
www.schnackel.com
SE JOB# 200363


SEAL/ SIGNATURE:
STATE OF MISSOURI
GREGORY ROY SCHNACKEL
NUMBER E-026570
PROFESSIONAL ENGINEER
Date: 03/05/21
COA #: E-2009006642

| NO. | BY | DATE | DESCRIPTION |
|---|---|---|---|
| 1 | | 2021-03-09 | ADDENDUM #1 |
| | | 2021-01-11 | PERMIT/BID SET |
| | | 2020-12-21 | 75% SET |
| | | 2020-10-12 | DD SET |

SHAKE SHACK

SHAKE SHACK - LEE'S SUMMIT MO

LEE'S SUMMIT
MISSOURI
SHACK #1348

PERMIT/BID SET

FIRE PROTECTION ABBREVIATIONS & SYMBOLS

| | |
|---|---|
| DRAWN BY: | DAK |
| CHECKED BY: | GRS |
| JOB NO: | 20068.00 |

F001

RELEASE FOR CONSTRUCTION
AS NOTED ON PLANS REVIEW
DEVELOPMENT SERVICES
LEE'S SUMMIT, MISSOURI
03/10/2021

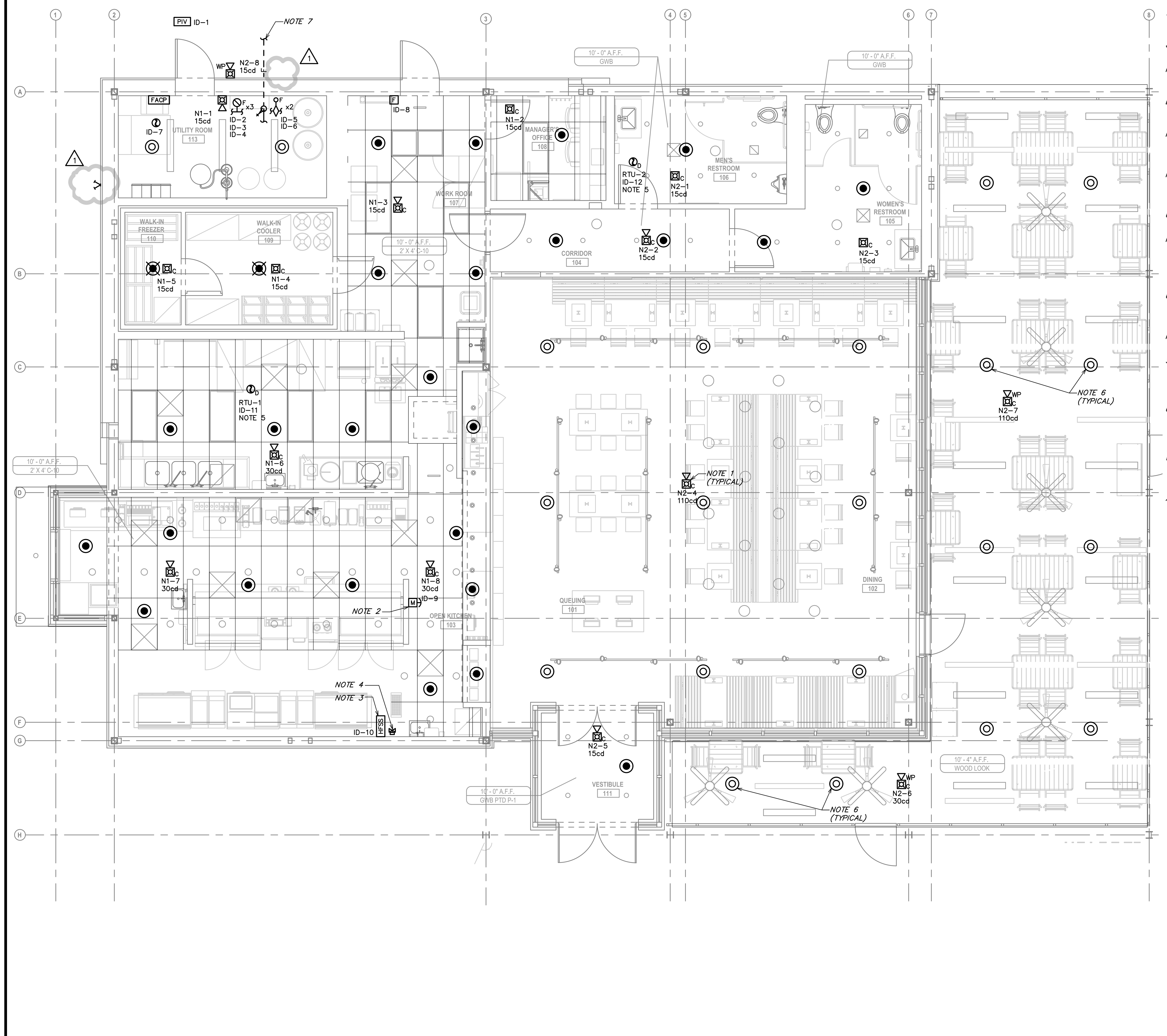


1 FIRE PROTECTION PLAN
SCALE: 1/4" = 1'-0"

### GENERAL FIRE ALARM NOTES:

A. THE CONTRACTOR SHALL PROVIDE A FULLY ENGINEERED DESIGN OF THE FIRE DETECTION AND ALARM SYSTEM FROM A QUALIFIED FIRE DETECTION AND ALARM SYSTEM DESIGNER. ANY FIRE DETECTION AND ALARM INFORMATION INDICATED ON THE DRAWINGS IS STRICTLY FOR THE PURPOSE OF FILING FOR PERMIT AND ESTABLISHING A MINIMUM CRITERIA TO AID THE FIRE DETECTION AND ALARM SYSTEM DESIGNER IN THE DESIGN OF THE FULLY ENGINEERED FIRE DETECTION AND ALARM DRAWINGS. DESIGNER SHALL BE NICET LEVEL III OR IV (3 OR 4) CERTIFIED FIRE ALARM TECHNICIAN OR REGISTERED FIRE PROTECTION ENGINEER, EMPLOYED BY FIRE ALARM CONTROL UNIT MANUFACTURER, CONTRACTOR, OR INSTALLER, WITH EXPERIENCE DESIGNING FIRE ALARM SYSTEMS IN THE JURISDICTIONAL AREA OF THE AUTHORITIES HAVING JURISDICTION.

B. THE DESIGNER SHALL PRODUCE ALL REQUIRED DRAWINGS, CALCULATIONS, AND EQUIPMENT SPECIFICATIONS REQUIRED FOR JURISDICTIONAL APPROVAL AND SUBMIT ALL REQUIRED DOCUMENTS TO THE AUTHORITY HAVING JURISDICTION FOR APPROVAL.

C. THE DESIGNER AND CONTRACTOR ARE RESPONSIBLE TO CLOSELY COORDINATE WITH THE FIRE SPRINKLER CONTRACTOR TO PROVIDE APPROPRIATE MONITORING OF ALL FLOW SWITCHES, TAMPER SWITCHES, PRESSURE SWITCHES, CORROSION MONITORING SYSTEMS, ETC.

D. THE CONTRACTOR IS RESPONSIBLE TO PROVIDE ALL MATERIALS, COMPONENTS, AND LABOR REQUIRED FOR A COMPLETE, OPERATIONAL, CODE-COMPLIANT FIRE DETECTION AND ALARM SYSTEM BASED ON THE FULLY ENGINEERED FIRE ALARM DRAWINGS THAT THE CONTRACTOR IS RESPONSIBLE TO PROVIDE.

E. ALL NEW FIRE ALARM CONTROL PANELS THAT ARE INSTALLED WITHIN MULTI-OCCUPANCY BUILDINGS THAT ARE EQUIPPED WITH A MAIN BUILDING FIRE ALARM CONTROL PANEL SHALL BE INTERLOCKED WITH THE MAIN BUILDING FIRE ALARM CONTROL PANEL SUCH THAT ALL ALARM, SUPERVISORY, AND TROUBLE SIGNALS REPORTED AT THE TENANT'S FIRE ALARM CONTROL PANEL SHALL ALSO BE TRANSMITTED TO THE MAIN BUILDING FIRE ALARM CONTROL PANEL.

F. ALL FIRE ALARM WIRING SHALL BE INSTALLED IN CONDUIT WHEN REQUIRED BY THE ADOPTED ELECTRICAL CODE, BUILDING CODE, AND/OR FIRE CODE, INCLUDING ALL LOCAL AMENDMENTS.

G. WHERE THE MECHANICAL DESIGN UTILIZES A PLENUM RETURN AIR CEILING DESIGN, ALL EQUIPMENT AND MATERIALS INSTALLED WITHIN THE PLENUM RETURN CEILING MUST MEET THE FLAME SPREAD AND SMOKE DEVELOPED RATINGS OF 25/50 AND BE APPROVED FOR USE IN PLENUM RETURN CEILINGS. COORDINATE PLENUM CEILING LOCATIONS WITH THE MECHANICAL CONTRACTOR.

H. COORDINATE ALL DEVICE LOCATIONS AND CIRCUIT ROUTING WITHIN ANY MILLWORK WITH MILLWORK VENDOR PRIOR TO ROUGH-IN.

I. COORDINATE THE CONNECTIONS OF ALL EQUIPMENT PROVIDED BY OTHERS WITH THE CONTRACTOR PROVIDING THE EQUIPMENT PRIOR TO ROUGH-IN. THIS INCLUDES, BUT IS NOT LIMITED TO, MECHANICAL EQUIPMENT, KITCHEN EQUIPMENT, AUDIO/VISUAL EQUIPMENT, FIRE SUPPRESSION SYSTEM EQUIPMENT, ETC.

J. ALL FIRE ALARM SYSTEM DEVICES AND COMPONENTS SHALL BE SUITABLE FOR THE ENVIRONMENT IN WHICH THEY ARE INSTALLED. DEVICES MOUNTED IN DAMP OR WET LOCATIONS SHALL BE WEATHERPROOF.

K. ALTHOUGH NOT SPECIFICALLY SHOWN, THE FIRE ALARM CONTRACTOR SHALL PROVIDE ALL REQUIRED FIRE ALARM SYSTEM WIRING AND CABLING, PER THE MANUFACTURER'S RECOMMENDATIONS, FOR A COMPLETE, FUNCTIONAL FIRE ALARM SYSTEM.

L. ANY EXISTING CONDITIONS INDICATED IN THIS SET OF DRAWINGS ARE BASED ON INFORMATION PROVIDED BY OTHERS AND POSSIBLE LIMITED FIELD VERIFICATION. THE CONTRACTOR SHALL ADJUST FOR ACTUAL FIELD CONDITIONS AT NO ADDITIONAL EXPENSE TO THE OWNER.

M. THE CONTRACTOR SHALL VISIT THE PROJECT SITE, REVIEW EXISTING CONDITIONS AGAINST THE CONTRACT DOCUMENTS, AND FAMILIARIZE HIMSELF WITH THE WORK PRIOR TO BIDDING AND START OF THE WORK. BY SIGNING THE CONTRACT, THE CONTRACTOR ACKNOWLEDGES THE SITE VISIT HAS BEEN COMPLETED AND THE EXISTING CONDITIONS ARE ACCEPTED.

N. THE CONTRACTOR IS RESPONSIBLE FOR DEMOLITION OF EXISTING FIRE ALARM EQUIPMENT AND DEVICES AS INDICATED AND/OR AS REQUIRED TO ALLOW FOR INSTALLATION AND CONSTRUCTION OF THE NEW WORK. REMOVE ALL EQUIPMENT, DEVICES, CONDUITS, SUPPORTS, HANGERS, ETC. THAT ARE NOT SHOWN AND ARE REQUIRED TO BE REMOVED IN ORDER TO COMPLETE THE NEW WORK.

O. WHERE ITEMS ARE SHOWN HATCHED, ITEMS ARE TO BE DEMOLISHED ALONG WITH THEIR ASSOCIATED BOXES, CONDUITS, CONDUCTORS, SUPPORTS, AND HANGERS UNLESS INDICATED OTHERWISE.

P. FIRE ALARM CIRCUITS THAT ARE TO BE REMOVED SHALL BE REMOVED IN THEIR ENTIRETY. CONDUCTORS SHALL BE REMOVED FROM THE ITEM TO BE DEMOLISHED TO THE SOURCE OVERCURRENT DEVICE. RACEWAYS WHICH ARE INSTALLED IN OR BELOW FLOORS OR WITHIN WALLS MAY BE ABANDONED, BUT ALL OVERHEAD OR EXPOSED RACEWAYS SHALL BE REMOVED. EXPOSED RACEWAYS TO BE ABANDONED SHALL BE REMOVED AND SHALL BE CUT OR CHISELED AT LEAST 2" INTO THE WALL OR FLOOR AND THE OPENING GROUTED SMOOTH.

Q. THE OWNER SHALL HAVE SALVAGE RIGHTS TO ANY ITEMS THAT ARE TO BE DEMOLISHED. THOSE ITEMS THAT THE OWNER WISHES TO SALVAGE SHALL BE CAREFULLY REMOVED AND STORED IN A LOCATION AS DIRECTED BY THE OWNER. ALL OTHER ITEMS OF DEMOLITION SHALL BECOME THE PROPERTY OF THE CONTRACTOR AND SHALL BE REMOVED FROM THE SITE.

R. PROVIDE TEMPORARY CIRCUITS AND CONNECTIONS TO FIRE ALARM SYSTEM DEVICES IN AREAS OF THE FACILITY THAT ARE TO REMAIN IN OPERATION AS REQUIRED TO MAINTAIN THOSE AREAS IN COMPLETE OPERATION.

S. MAINTAIN CONTINUITY OF EXISTING CIRCUITS AS REQUIRED TO PROVIDE POWER TO REMAINING FIRE ALARM SYSTEM EQUIPMENT AND DEVICES THAT ARE NOT BEING REMOVED.

T. PROVIDE BLANK COVERPLATES FOR EXISTING EMPTY DEVICE BOXES OR JUNCTION BOXES THAT MUST REMAIN, SUCH AS FOR CIRCUITS THAT MUST BE MAINTAINED TO OTHER AREAS.

U. WHERE FIRE ALARM DISTRIBUTION EQUIPMENT SUCH AS PANELBOARDS ARE TO BE REMOVED OR RELOCATED, ALL EXISTING CIRCUITS THAT ARE TO REMAIN SHALL BE RECONNECTED TO NEW OR RELOCATED FIRE ALARM DISTRIBUTION EQUIPMENT TO MAINTAIN THE CONTINUITY OF THOSE EXISTING CIRCUITS. INTERCEPT AND EXTEND ALL EXISTING CIRCUITS AS REQUIRED.

V. REMOVE ALL ABANDONED FIRE ALARM CABLING.

W. FIRE ALARM DEVICES MARKED "EX" ARE EXISTING DEVICES THAT ARE TO REMAIN IN PLACE. ALL EXISTING FIRE ALARM DEVICES WITHIN THE LIMITS OF CONSTRUCTION SHALL BE REPAIRED TO A LIKE-NEW CONDITION, THOROUGHLY CLEANED, AND RELAMPED. ANY EXISTING ALARM DEVICES THAT ARE DAMAGED BEYOND REPAIR SHALL BE REPLACED WITH AN IDENTICAL DEVICE.

X. FIRE ALARM DEVICES MARKED "RR" ARE EXISTING DEVICES THAT ARE TO BE OR HAVE BEEN RELOCATED. ALL DEVICES DESIGNATED FOR RELOCATION SHALL BE DISCONNECTED FROM EXISTING BRANCH CIRCUIT, REMOVED FROM EXISTING AREA, STORED, REPAIRED TO A LIKE-NEW CONDITION, INSTALLED IN REMODELED AREA, RECONNECTED, THOROUGHLY CLEANED, AND RELAMPED. ANY RELOCATED DEVICES THAT ARE DAMAGED BEYOND REPAIR SHALL BE REPLACED WITH AN IDENTICAL DEVICE.

Y. IN THE EVENT AN AUDIO SYSTEM IS PRESENT IN THE PROPOSED SPACE, AN ADDRESSABLE CONTROL MODULE SHALL BE PROVIDED TO AUTOMATICALLY SHUTDOWN THE SOUND SYSTEM UPON ACTIVATION OF THE TENANT NOTIFICATION APPLIANCES.

### GENERAL FIRE SPRINKLER NOTES:

A. FIRE SPRINKLER CONTRACT DOCUMENTS FOUND HEREWITH ARE TO ESTABLISH THE SCOPE OF WORK AND PERFORMANCE SPECIFICATIONS OF THE SYSTEM ONLY. DETAILED FIRE SPRINKLER SHOP DRAWINGS AND HYDRAULIC CALCULATIONS SHALL BE PROVIDED BY THE INSTALLING CONTRACTOR UNDER A DEFERRED SUBMITTAL.

B. PERFORM WORK IN ACCORDANCE WITH LANDLORD CONSTRUCTION REQUIREMENTS, INCLUDING ANY TENANT CRITERIA MANUALS AND LEASE EXHIBITS, WHERE APPLICABLE. FIRE SPRINKLER CONTRACTOR SHALL OBTAIN ALL APPLICABLE MANUALS PRIOR TO BIDDING.

C. FIRE SPRINKLER SYSTEM SHALL BE INSTALLED IN STRICT CONFORMITY WITH ALL LATEST REQUIREMENTS OF THE STATE BUILDING CODE, THE LOCAL FIRE DEPARTMENT, ALL LOCAL RULES AND REGULATIONS AS DEFINED BY THE AUTHORITY HAVING JURISDICTION AND THE NATIONAL FIRE PROTECTION ASSOCIATION (NFPA).

D. TESTING OF SYSTEM SHALL BE IN ACCORDANCE WITH NFPA REQUIREMENTS. CONTRACTOR SHALL RUN AND PAY FOR ALL TESTS REQUIRED TO ENSURE THE SYSTEM HAS ADEQUATE FLOW AND PRESSURE.

E. PROVIDE ALL CODE REQUIRED SIGNAGE FOR FIRE SPRINKLER SYSTEM.

F. SPARE HEAD CABINETS SHALL BE PROVIDED WITH THE APPROPRIATE NUMBER OF SPRINKLERS AND WRENCHES IN ACCORDANCE WITH NFPA REQUIREMENTS.

G. PROVIDE ALL CODE REQUIRED CLEARANCE ABOVE AND AROUND ELECTRICAL EQUIPMENT.

H. COORDINATE SPRINKLER HEAD LOCATIONS WITH ALL TRADES PRIOR TO FABRICATION OR INSTALLATION. LOCATIONS OF FIRE SPRINKLER HEADS AND PIPES ARE SHOWN FOR GRAPHICAL REPRESENTATION ONLY. CONTRACTOR IS RESPONSIBLE FOR PROVIDING COMPLETE FIRE SPRINKLER COVERAGE BASED ON ACTUAL CONDITIONS AT NO ADDITIONAL COST TO THE OWNER. SPRINKLER PIPINIG SHALL ROUTE AROUND, PROVIDE PROPER CLEARANCES FOR, AND AVOID CONFLICT WITH BUILDING EQUIPMENT AND SYSTEMS.

I. ENTIRE FIRE SPRINKLER SYSTEM SHALL BE INSTALLED LEVEL OR SLOPED TOWARD THE SERVICE ENTRANCE TO FACILITATE DRAIN DOWN UNLESS NOTED OTHERWISE. DRAINS SHALL BE SIZED AND INSTALLED IN ACCORDANCE WITH LOCAL AND NFPA CODES. ALL FLOATING MAINS SHALL BE PROVIDED WITH AN AUXILLARY DRAIN ROUTED TO THE EXTERIOR.

J. ALL SPRINKLER LINES 2" AND SMALLER SHALL BE SCHEDULE 40 WITH THREADED FITTINGS OR ROLL GROVED CONNECTIONS. ALL SPRINKLER LINES AND MAINS 2-1/2" AND LARGER SHALL BE SCHEDULE 10 WITH ROLL GROOVE CONNECTIONS UNLESS NOTED OTHERWISE. THE USE OF WELD-O-LETS IS ACCEPTABLE. UNDERGROUND PIPING SHALL BE DUCTILE IRON WITH PVC WRAP TO PROVIDE PROTECTION FROM CORROSIVE SOILS.

K. SEE ELECTRICAL/FIRE ALARM PLANS FOR FIRE ALARM BELL LOCATION AND INFORMATION.

L. SPRINKLER HEAD DEFLECTORS SHALL BE INSTALLED SO THAT THE DISTANCE MEASURED FROM THE DEFLECTOR TO TOP OF STRUCTURE IS IN ACCORDANCE WITH THE AUTHORITY HAVING JURISDICTION AND NFPA REQUIREMENTS.

M. AUTOMATIC SPRINKLERS SHALL BE OF THE OPERATING TEMPERATURE AS REQUIRED BY THE SPRINKLER LOCATION. FINAL HEAD TEMPERATURES SHALL BE IN ACCORDANCE WITH NFPA 13 TO COMPENSATE FOR FIELD CONDITIONS.

N. SPRINKLER DESIGN IS BASED ON LIMITED FIELD INFORMATION. CONTRACTOR IS RESPONSIBLE FOR VERIFYING ACTUAL FIELD CONDITIONS AND PROVIDING A FULLY COMPLIANT SPRINKLER SYSTEM AT NO ADDITIONAL EXPENSE TO THE OWNER.

O. THE CUMULATIVE HORIZONTAL LENGTH OF AN UNSUPPORTED ARMOVER TO A SPRINKLER, SPRINKLER DROP, OR SPRIG-UP, AND THE UNSUPPORTED LENGTH BETWEEN THE END SPRINKLER AND THE LAST HANGER ON THE LINE, SHALL NOT EXCEED THE LIMITS AS ALLOWED FOR BY NFPA 13.

P. THE DISTANCE BETWEEN A HANGER AND THE CENTERLINE OF AN UPRIGHT SPRINKLER SHALL NOT BE LESS THAN 3 INCHES.

Q. ANY EXISTING SPRINKLER HEAD OUTLETS THAT ARE NO LONGER REQUIRED SHALL BE PLUGGED.

R. NO MORE THAN TWO SPRINKLER HEADS SHALL BE FED FROM ANY ONE EXISTING SPRINKLER OUTLET.

S. THE ENTIRE AREA UNDER CONSTRUCTION SHALL BE PROVIDED WITH A COMPLETE FIRE SPRINKLER SYSTEM IN ALL RESPECTS. RELOCATE/ADD NEW SPRINKLER DROPS TO EXISTING SYSTEMS WHERE REQUIRED TO PROVIDE COMPLETE COVERAGE THROUGH THE AREA OF CONSTRUCTION. COORDINATE FIRE SPRINKLER PIPING AND HEAD LOCATIONS WITH ALL TRADES PRIOR TO FABRICATION OR INSTALLATION. IF CONFLICTS OCCUR BETWEEN FIRE SPRINKLER PIPING/HEADS AND LIGHTS, DIFFUSERS, DUCTWORK, ETC., THE FIRE SPRINKLER PIPING/HEADS SHALL BE RELOCATED OR REROUTED AT NO ADDITIONAL EXPENSE TO THE PROJECT. AN ADEQUATE SUPPLY OF EXTRA PIPING AND FITTINGS SHALL BE MAINTAINED ON SITE TO ALLOW FOR FIELD MODIFICATIONS. APPROVED SHOP DRAWINGS DO NOT PRECLUDE REROUTING IF SO REQUIRED BY THE ARCHITECT/ENGINEER.

### FIRE PROTECTION NOTES:

1. CONTRACTOR SHALL PROVIDE COMPLETE INSTALLATION OF NOTIFICATION APPLIANCE IN THE BASE BID AS SHOWN AND PROVIDE A UNIT PRICE ON THE BID FORM FOR THE COST TO PROVIDE AN ADDITIONAL NOTIFICATION APPLIANCE BEYOND THOSE SHOWN AND CONNECT IT TO THE FIRE ALARM SYSTEM.
2. PROVIDE 4" OCTAGONAL JUNCTION BOX WITH SCREW THREADS SET AT THE 2 AND 8 O'CLOCK POSITIONS FOR THE GREASE HOOD FIRE SUPPRESSION SYSTEM PULL STATION. PROVIDE A 1/2" CONDUIT FROM THE JUNCTION BOX TO 6" ABOVE THE ACCESSIBLE CEILING AND TERMINATE WITH A CONDUIT BUSHING. COORDINATE EXACT LOCATION WITH THE GREASE HOOD FIRE SUPPRESSION SYSTEM INSTALLER AND THE FIRE MARSHAL PRIOR TO ROUGH-IN.
3. GREASE HOOD FIRE SUPPRESSION SYSTEM SHALL BE INTERLOCKED WITH FIRE ALARM SYSTEM SUCH THAT FIRE SUPPRESSION SYSTEM ACTIVATION ACTIVATES THE FIRE ALARM SYSTEM. COORDINATE EXACT LOCATION OF THE GREASE HOOD FIRE SUPPRESSION SYSTEM CONTROL PANEL WITH THE OWNER AND FIRE MARSHAL PRIOR TO ROUGH-IN.
4. INTERLOCK GAS SOLENOID VALVE WITH GREASE HOOD FIRE SUPPRESSION SYSTEM SUCH THAT GAS SOLENOID VALVE CLOSES UPON GREASE HOOD FIRE SUPPRESSION SYSTEM DISCHARGE. COORDINATE ALL REQUIREMENTS WITH PLUMBING CONTRACTOR AND GREASE HOOD FIRE SUPPRESSION SYSTEM MANUFACTURER PRIOR TO ROUGH-IN.
5. DUCT SMOKE DETECTOR AND RELAY FOR HVAC UNIT SUPPLY FAN SHUTDOWN SHALL BE FURNISHED BY THE ELECTRICAL CONTRACTOR FOR INSTALLATION BY THE MECHANICAL CONTRACTOR. THE ELECTRICAL CONTRACTOR SHALL ALSO PROVIDE A REMOTE KEYED TEST STATION WITH VISUAL STATUS ANNUNCIATOR WHEN DUCT SMOKE DETECTOR IS INSTALLED IN A CONCEALED LOCATION GREATER THAN 10'-0" ABOVE FINISHED FLOOR OR WHEN DUCT SMOKE DETECTOR'S STATUS INDICATORS ARE NOT READILY VISIBLE. COORDINATE LOCATION OF REMOTE KEYED TEST STATION WITH AUTHORITY HAVING JURISDICTION AND OWNER PRIOR TO ROUGH-IN. ALL FINAL WIRING SHALL BE BY THE ELECTRICAL CONTRACTOR.
6. SPRINKLER COVERAGE SHOWN FOR EXTERIOR DINING AREA TO BE FED FROM AN AUXILIARY DRY SYSTEM COORDINATED BY THE INSTALLING SPRINKLER CONTRACTOR. CONFIRM REQUIREMENT FOR COVERAGE BELOW EXTERIOR OVERHANG WITH THE AUTHORITY HAVING JURISDICTION PRIOR TO INSTALLATION.
7. 6" DEDICATED FIRE SERVICE LINE. SEE CIVIL FOR CONTINUATION AND DETAILS.

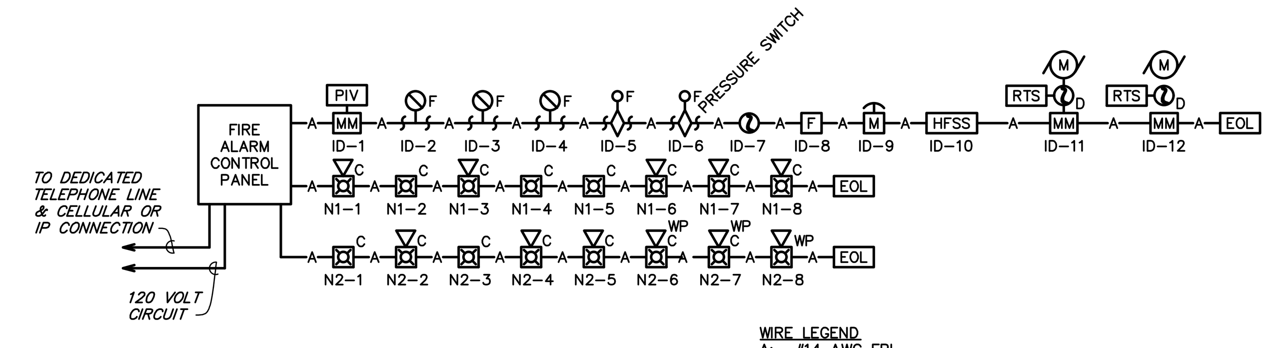


1 FIRE ALARM RISER DIAGRAM
SCALE: NOT TO SCALE

**FOR REFERENCE ONLY:**
FIRE ALARM PLANS, DETAILS, AND SPECIFICATIONS PROVIDED BY SCHNACKEL ENGINEERS, INC. ARE CONTRACT DOCUMENTS ONLY. SAID DOCUMENTS ARE NOT INTENDED TO BE SUBMITTED FOR FIRE ALARM WORK PERMITTING. THE LICENSED INSTALLING FIRE ALARM CONTRACTOR SHALL PREPARE AND SUBMIT COMPLETE SHOP DRAWINGS TO THE AUTHORITY HAVING JURISDICTION, INCLUDING CALCULATIONS AND MANUFACTURER CUT SHEETS, AS REQUIRED FOR APPROVAL UNDER A DEFERRED SUBMITTAL. CONTRACTOR IS RESPONSIBLE FOR FINAL ALARM DEVICE QUANTITIES AND LOCATIONS.

**FOR REFERENCE ONLY:**
FIRE SPRINKLER PLANS, DETAILS, AND SPECIFICATIONS PROVIDED BY SCHNACKEL ENGINEERS, INC. ARE CONTRACT DOCUMENTS ONLY. SAID DOCUMENTS ARE NOT INTENDED TO BE SUBMITTED FOR FIRE SPRINKLER WORK PERMITTING. THE LICENSED INSTALLING FIRE SPRINKLER CONTRACTOR SHALL PREPARE AND SUBMIT COMPLETE SHOP DRAWINGS TO THE AUTHORITY HAVING JURISDICTION, INCLUDING HYDRAULIC CALCULATIONS, AS REQUIRED FOR APPROVAL UNDER A DEFERRED SUBMITTAL. CONTRACTOR IS RESPONSIBLE FOR FINAL SPRINKLER HEAD QUANTITIES, LOCATIONS, AND TEMPERATURES.

*LEGEND*
- EXISTING
- NEW WORK
- NEW TO EXISTING CONNECTION

Bergmeyer
BOS – 51 Sleeper St. 6th Floor Boston, MA 02210 617.542.1025
LA – 800 South Figueroa St. Suite 1080 Los Angeles, CA 90017 212.337.1090
www.bergmeyer.com

CONSULTANTS:
Schnackel engineers.
800-581-0963
www.schnackel.com
SE JOB#: 200383

SEAL/ SIGNATURE:
STATE OF MISSOURI
GREGORY ROY SCHNACKEL
NUMBER E-026570
REGISTERED PROFESSIONAL ENGINEER
Date: 03/05/21
COA #: E-2009006642

| NO. | BY | DATE | DESCRIPTION |
|---|---|---|---|
| 1 | | 2021-03-09 | ADDENDUM #1 |
| | | 2021-01-11 | PERMIT/BID SET |
| | | 2020-12-21 | 75% SET |
| | | 2020-10-12 | DD SET |

SHAKE SHACK

SHAKE SHACK - LEE'S SUMMIT MO

LEE'S SUMMIT
MISSOURI
SHACK #1348

PERMIT/BID SET

FIRE PROTECTION PLAN

| | |
|---|---|
| DRAWN BY: | DAK |
| CHECKED BY: | GRS |
| JOB NO: | 20068.00 |

F101

RELEASE FOR CONSTRUCTION
AS NOTED ON PLANS REVIEW
DEVELOPMENT SERVICES
LEE'S SUMMIT, MISSOURI
03/10/2021

## SPARE SPRINKLER CABINET CONTENTS

| SIZE OF FACILITY | MIN HEAD QTY | MIN HEADS PER TYPE | WRENCH PER HEAD TYPE | LIST OF SPRINKLERS INSTALLED | SPRINKLER ESCUTCHEONS PER TYPE |
|---|---|---|---|---|---|
| 0–300 SPRINKLERS | 6 | 2 | 1 | 1 | 2 |
| 300–1000 SPRINKLERS | 12 | 2 | 1 | 1 | 2 |
| +1000 SPRINKLERS | 24 | 2 | 1 | 1 | 2 |

NOTE: SPRINKLERS SHALL BE KEPT WHERE TEMPERATURE DOES NOTE EXCEED 100°F.

## MAXIMUM PROTECTION AREAS AND MAXIMUM SPACING FOR STANDARD SPRAY UPRIGHT & PENDENT HEADS

| CONSTRUCTION TYPE | SYSTEM TYPE | PROTECTION AREA MAX (SQ.FT.) | MAX SPACING | MAX DISTANCE TO WALL (FT) |
|---|---|---|---|---|
| **LIGHT HAZARD:** | | | | |
| NONCOMBUSTIBLE OBSTRUCTED + UNOBSTRUCTED & COMBUSTIBLE UNOBSTRUCTED WITH MEMBERS 3FT OR MORE O.C. | PIPE SCHEDULE | 200 | 15'–0" | 7'–6" |
| | HYD. CALC. | 225 | 15'–0" | 7'–6" |
| COMBUSTIBLE OBSTRUCTED WITH MEMBERS 3FT OR MORE O.C. | ALL | 168 | 15'–0" | 7'–6" |
| COMBUSTIBLE OBSTRUCTED + UNOBSTRUCTED WITH MEMBERS LESS THAN 3FT O.C. | ALL | 130 | 15'–0" | 7'–6" |
| COMBUSTIBLE CONCEALED SPACE UNDER A PITCHED ROOF HAVING COMBUSTIBLE WOOD JOIST OR WOOD TRUSS CONSTRUCTION WITH MEMBERS LESS THAN 3FT O.C. WITH SLOPES HAVING A PITCH OF 4:12 OR GREATER. | ALL | 120 | 15'–0" PARALLEL TO SLOPE<br>10'–0" PERP. TO SLOPE | 7'–6" PARALLEL TO SLOPE<br>5'–0" PERP. TO SLOPE |
| **ORDINARY HAZARD:** | | | | |
| ALL | ALL | 130 | 15'–0" | 7'–6" |
| **EXTRA HAZARD:** | | | | |
| ALL | PIPE SCHEDULE | 90 | 12'–0" | 6'–0" |
| | HYD. CALC. DENSITY=.25+ | 100 | 12'–0" | 6'–0" |
| | HYD. CALC. DENSITY<.25 | 130 | 15'–0" | 7'–6" |

## HANGER LOCATIONS (MAX PRESSURE < 100 PSI)

| PIPE SIZE | A (MAX) | A (MIN) | B (MAX) |
|---|---|---|---|
| 1" | 36" | 3" | 24" |
| 1 1/4" | 48" | 3" | 24" |
| ≥1 1/2" | 60" | 3" | 24" |

## HANGER ROD SIZES

| PIPE SIZE | DIAMETER |
|---|---|
| UP TO 4" | 3/8" |
| 5" TO 8" | 1/2" |
| 10" & 12" | 5/8" |

## HANGER LOCATIONS (MAX PRESSURE > 100 PSI)

| PIPE SIZE | A (MAX) | A (MIN) | B (MAX) |
|---|---|---|---|
| 1" | 12" | 3" | 12" |
| 1 1/4" | 12" | 3" | 12" |
| ≥1 1/2" | 12" | 3" | 12" |

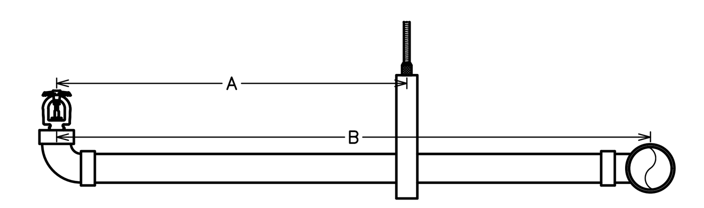


STEEL PIPE ONLY

## MAXIMUM DISTANCE BETWEEN HANGERS (FT. – IN.)

| PIPE TYPE | 3/4 | 1 | 1 1/4 | 1 1/2 | 2 | 2 1/2 | 3 | 3 1/2 | 4 | 5 | 6 | 8 |
|---|---|---|---|---|---|---|---|---|---|---|---|---|
| STEEL PIPE EXCEPT THREADED LIGHT-WALL | N/A | 12–0 | 12–0 | 15–0 | 15–0 | 15–0 | 15–0 | 15–0 | 15–0 | 15–0 | 15–0 | 15–0 |
| THREADED LIGHT WALL STEEL PIPE | N/A | 12–0 | 12–0 | 12–0 | 12–0 | 12–0 | 12–0 | N/A | N/A | N/A | N/A | N/A |

(Column headings 3/4 through 8: NOMINAL PIPE SIZE (IN))

## FIRE SPRINKLER TEMPERATURE RATINGS

### TEMPERATURE OF SPRINKLERS BASED ON DISTANCE FROM HEAT SOURCES

| TYPE OF HEAT CONDITION | ORDINARY TEMPERATURE | INTERMEDIATE TEMPERATURE | HIGH TEMPERATURE |
|---|---|---|---|
| (1) HEATING DUCTS (A) ABOVE (B) SIDE & BELOW (C) DIFFUSER | MORE THAN 2'–6"<br>MORE THAN 1'–0"<br>ANY DISTANCE NOT SHOWN UNDER INTERMEDIATE COLUMN | 2'–6" OR LESS<br>1'–0" OR LESS<br>DOWNWARD DISCHARGE: CYLINDER WITH 1'–0" RADIUS FROM EDGE EXTENDING 1'–0" BELOW & 2'–6" ABOVE<br>HORIZONTAL DISCHARGE: SEMICYLINDER WITH 2'–6" RADIUS IN DIRECTION OF FLOW EXTENDING 1'–0" BELOW & 2'–6" ABOVE | |
| (2) UNIT HEATER (A) HORIZONTAL DISCHARGE | | DISCHARGE SIDE: 7'–0" TO 20'–0" RADIUS PIE-SHAPED CYLINDER EXTENDING 7'–0" ABOVE & 2'–0" BELOW HEATER; ALSO 7'–0" RADIUS CYLINDER MORE THAN 7'–0" ABOVE UNIT HEATER | 7'–0" RADIUS CYLINDER EXTENDING 7'–0" ABOVE & 2'–0" BELOW UNIT HEATER |
| (B) VERTICAL DOWNWARD DISCHARGE | | 7'–0" RADIUS CYLINDER EXTENDING UPWARD FROM AN ELEVATION 7'–0" ABOVE UNIT HEATER | 7'–0" RADIUS CYLINDER EXTENDING FROM THE TOP OF THE UNIT HEATER TO AN ELEVATION OF 7'–0" ABOVE UNIT HEATER |
| (3) STEAM MAINS (UNCOVERED) (A) ABOVE (B) SIDE & BELOW (C) BLOWOFF VALVE | MORE THAN 2'–6"<br>MORE THAN 1'–0"<br>MORE THAN 7'–0" | MORE THAN 2'–6"<br>MORE THAN 1'–0" | MORE THAN 7'–0" |

### RATINGS OF SPRINKLERS IN SPECIFIED LOCATIONS

| | | | |
|---|---|---|---|
| SKYLIGHTS | | GLASS OR PLASTIC | |
| ATTICS | VENTILATED | UNVENTILATED | |
| PEAKED ROOF: METAL OR THIN BOARDS, CONCEALED OR NOT CONCEALED, INSULATED OR UNINSULATED | VENTILATED | UNVENTILATED | |
| FLAT ROOF: METAL, NOT CONCEALED | VENTILATED OR UNVENTILATED | NOTE: FOR UNINSULATED ROOF, CLIMATE AND INSULATED OR UNINSULATED OCCUPANCY CAN REQUIRE INTERMEDIATE SPRINKLERS. CHECK ON JOB. | |
| FLAT ROOF: METAL, CONCEALED, INSULATED OR UNINSULATED | VENTILATED | UNVENTILATED | |
| SHOW WINDOWS | VENTILATED | UNVENTILATED | |

## FIRE ALARM SYSTEM INPUT/OUTPUT MATRIX

SYSTEM OUTPUTS: CONTROL UNIT ANNUCIATION / REMOTE ANNUNCIATOR / NOTIFICATION / FIRE SAFETY CONTROL

- A – AUDIBLE ALARM SIGNAL AT CONTROL UNIT
- B – VISUAL ALARM SIGNAL AT CONTROL UNIT
- C – AUDIBLE SUPERVISORY SIGNAL AT CONTROL UNIT
- D – VISUAL SUPERVISORY SIGNAL AT CONTROL UNIT
- E – AUDIBLE TROUBLE SIGNAL AT CONTROL UNIT
- F – VISUAL TROUBLE SIGNAL AT CONTROL UNIT
- G – DISPLAY ZONE OR DEVICE ADDRESS IN ALARM
- H – AUDIBLE ALARM SIGNAL AT ANNUNCIATOR
- I – VISUAL ALARM SIGNAL AT ANNUNCIATOR
- J – AUDIBLE SUPERVISORY SIGNAL AT ANNUNCIATOR
- K – VISUAL SUPERVISORY SIGNAL AT ANNUNCIATOR
- L – AUDIBLE TROUBLE SIGNAL AT ANNUNCIATOR
- M – VISUAL TROUBLE SIGNAL AT ANNUNCIATOR
- N – DISPLAY ZONE OR DEVICE ADDRESS IN ALARM
- O – TRANSMIT ALARM SIGNAL TO CENTRAL STATION
- P – TRANSMIT SUPERVISORY SIGNAL TO CENTRAL STATION
- Q – TRANSMIT TROUBLE SIGNAL TO CENTRAL STATION
- R – ACTUATE AUDIBLE NOTIFICATION APPLIANCES
- S – ACTUATE VISUAL NOTIFICATION APPLIANCES
- T – SHUTDOWN SUPPLY FANS ON INDIVIDUAL AIR-HANDLING UNITS RATED 2000 CFM OR GREATER
- U – SHUTDOWN SUPPLY FANS ON ALL AIR-HANDLING UNITS SHARING RETURN PLENUM WITH AGGREGATE CAPACITY OF 2000 CFM OR MORE
- V – SHUTDOWN SUPPLY FANS ON ALL AIR-HANDLING UNITS SERVING COMMON AREA WITH AGGREGATE CAPACITY OF 2000 CFM OR MORE
- W – SHUTDOWN AUDIO/MUSIC SOUND SYSTEM
- X – CLOSE SMOKE DAMPER(S)
- Y – ACTUATE HOOD EXHAUST FAN(S) IF NOT ALREADY RUNNING
- Z – CLOSE GAS SOLENOID VALVE(S)
- AA – DISCONNECT POWER TO APPLIANCES UNDER HOOD

| | SYSTEM INPUTS | A | B | C | D | E | F | G | H | I | J | K | L | M | N | O | P | Q | R | S | T | U | V | W | X | Y | Z | AA | |
|---|---|---|---|---|---|---|---|---|---|---|---|---|---|---|---|---|---|---|---|---|---|---|---|---|---|---|---|---|---|
| 1 | OPEN CIRCUIT | | | | | ● | ● | | | | | | ● | ● | | | | ● | | | | | | | | | | | 1 |
| 2 | GROUND FAULT | | | | | ● | ● | | | | | | ● | ● | | | | ● | | | | | | | | | | | 2 |
| 3 | WIRE-TO-WIRE SHORT CIRCUIT | | | | | ● | ● | | | | | | ● | ● | | | | ● | | | | | | | | | | | 3 |
| 4 | SYSTEM AC POWER FAILURE | | | ● | ● | | | | | | ● | ● | | | | | ● | | | | | | | | | | | | 4 |
| 5 | SYSTEM LOW BATTERY | | | | | ● | ● | | | | | | ● | ● | | | | ● | | | | | | | | | | | 5 |
| 6 | SMOKE DETECTOR: OPEN AREA | ● | ● | | | | | ● | ● | ● | | | | | ● | ● | | | ● | ● | ● | ● | ● | ● | ● | | | | 6 |
| 7 | SMOKE DETECTOR: SMOKE/FIRE DOORS | ● | ● | | | | | ● | ● | ● | | | | | ● | ● | | | ● | ● | ● | ● | ● | ● | ● | | | | 7 |
| 8 | SMOKE DETECTOR: DUCT-MOUNTED | | | ● | ● | | | ● | | | ● | ● | | | ● | | ● | | | | ● | ● | ● | | | | | | 8 |
| 9 | HEAT DETECTOR | ● | ● | | | | | ● | ● | ● | | | | | ● | ● | | | ● | ● | ● | ● | ● | ● | ● | | | | 9 |
| 10 | MANUAL PULL STATION | ● | ● | | | | | ● | ● | ● | | | | | ● | ● | | | ● | ● | | | | ● | | | | | 10 |
| 11 | HOOD FIRE SUPPRESSION SYSTEM ACTIVATION | ● | ● | | | | | ● | ● | ● | | | | | ● | ● | | | ● | ● | ● | ● | ● | ● | ● | ● | ● | ● | 11 |
| 12 | FIRE SPRINKLER FLOW SWITCH | ● | ● | | | | | ● | ● | ● | | | | | ● | ● | | | ● | ● | ● | ● | ● | ● | ● | | | | 12 |
| 13 | FIRE SPRINKLER TAMPER SWITCH | | | ● | ● | | | ● | | | ● | ● | | | ● | | ● | | | | | | | | | | | | 13 |

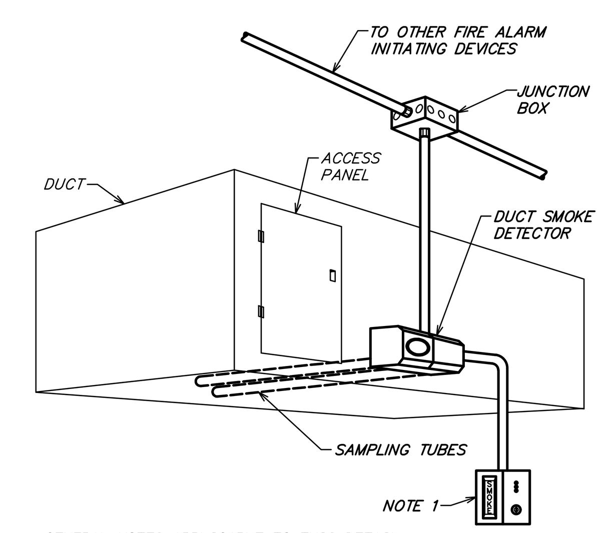


***GENERAL NOTES APPLICABLE TO THIS DETAIL:***

*A. CONNECT DUCT SMOKE DETECTOR TO FIRE ALARM CONTROL PANEL SUCH THAT DUCT SMOKE DETECTOR INITIATES A SUPERVISORY SIGNAL AT THE FIRE ALARM CONTROL PANEL UPON DUCT SMOKE DETECTOR SMOKE ACTIVATION. IF FIRE ALARM CONTROL PANEL DOES NOT EXIST, ACTIVATION OF THE DUCT SMOKE DETECTOR SHALL ACTIVATE AN AUDIBLE AND VISUAL SIGNAL AT A CONTINUOUSLY ATTENDED LOCATION.*

*B. INTERLOCK HVAC UNIT WITH DUCT SMOKE DETECTOR SUCH THAT HVAC UNIT SUPPLY FAN SHUTS DOWN IN ALARM CONDITION. PROVIDE ALL RELAYS REQUIRED TO ACCOMPLISH THE INTERLOCK.*

***NOTES APPLICABLE TO THIS DETAIL:***

*1. PROVIDE A REMOTE KEYED TEST STATION WITH VISUAL STATUS ANNUNCIATOR WHEN THE DUCT SMOKE DETECTOR IS INSTALLED IN A CONCEALED LOCATION GREATER THAN 10'–0" ABOVE FINISHED FLOOR OR WHEN DUCT SMOKE DETECTOR'S STATUS INDICATORS ARE NOT READILY VISIBLE. COORDINATE LOCATION WITH THE AUTHORITY HAVING JURISDICTION AND THE OWNER PRIOR TO ROUGH-IN.*

11 – DUCT SMOKE DETECTOR DETAIL
NOT TO SCALE

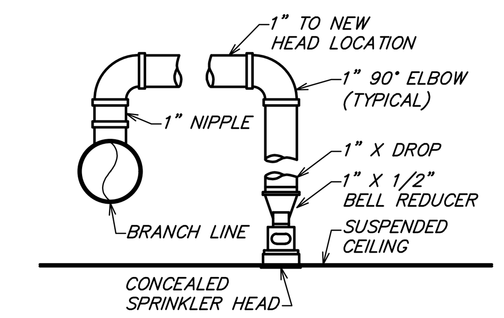


6 – CONCEALED ARMOVER DETAIL
NOT TO SCALE

| TYPE OF CONSTRUCTION | DISTANCE BELOW CEILING (A) | DISTANCE BELOW STRUCTURAL MEMBER (B) |
|---|---|---|
| UNOBSTRUCTED | 1" – 12" | N/A |
| OBSTRUCTED | 22" MAX. | 1" – 6" |

NOTE: OR IN ACCORDANCE WITH SPECIFIC SPRINKLER HEAD MANUFACTURER LISTING

UPRIGHT/PENDENT

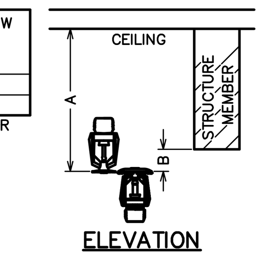


5 – DEFLECTOR DISTANCE
NOT TO SCALE

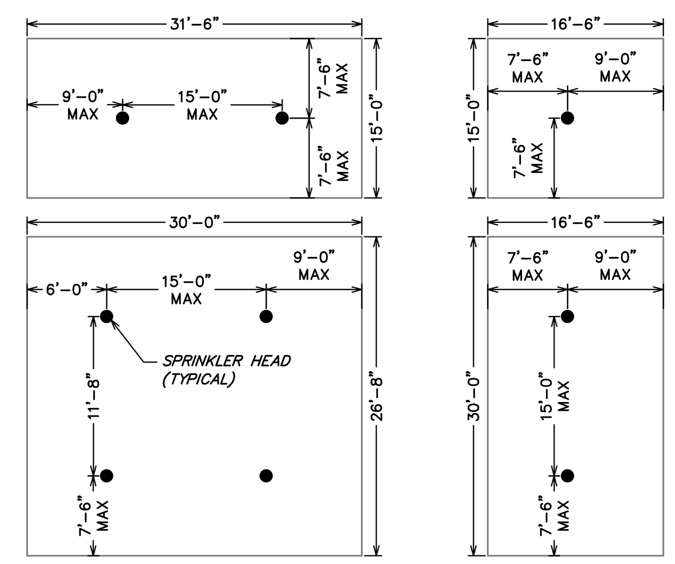


NOTE: LIGHT HAZARD OCCUPANCY ONLY, 800 SQFT MAXIMUM

14 – SMALL ROOM RULE SPACING
NOT TO SCALE

| DISTANCE FROM SPRINKLER TO SIDE OF OBSTRUCTION (A) | MAXIMUM DISTANCE OF DEFLECTOR ABOVE OBSTRUCTION (in.) (B) |
|---|---|
| < 1'–0" | 0 |
| 1'–0" < 1'–6" | 2.5 |
| 1'–6" < 2'–0" | 3.5 |
| 2'–0" < 2'–6" | 5.5 |
| 2'–6" < 3'–0" | 7.5 |
| 3'–0" < 3'–6" | 9.5 |
| 3'–6" < 4'–0" | 12 |
| 4'–0" < 4'–6" | 14 |
| 4'–6" < 5'–0" | 16.5 |
| 5'–0" < 5'–6" | 18 |
| 5'–6" < 6'–0" | 20 |
| 6'–0" < 6'–6" | 24 |
| 6'–6" < 7'–0" | 30 |
| 7'–0" < 7'–6" | 35 |

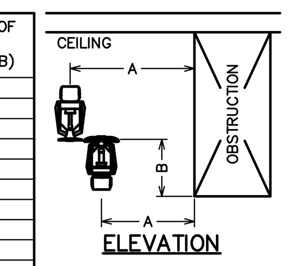


STANDARD SPRAY UPRIGHT/PENDENT

10 – OBSTRUCTION RULE
NOT TO SCALE

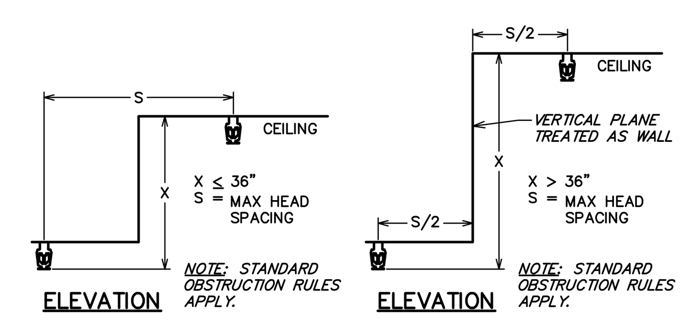


4 – VERTICAL CEILING CHANGE RULE
NOT TO SCALE

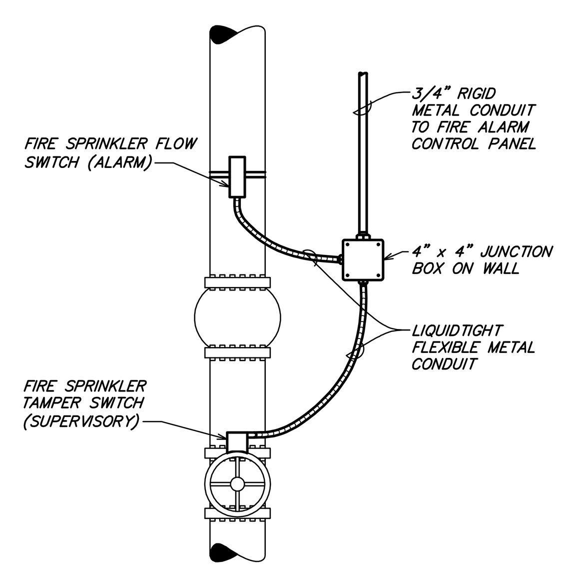


13 – FIRE SPRINKLER RISER CONNECTION DETAIL
NOT TO SCALE

A ≥ 3C OR 3D
A ≤ 24"
(GREATER OF C & D)

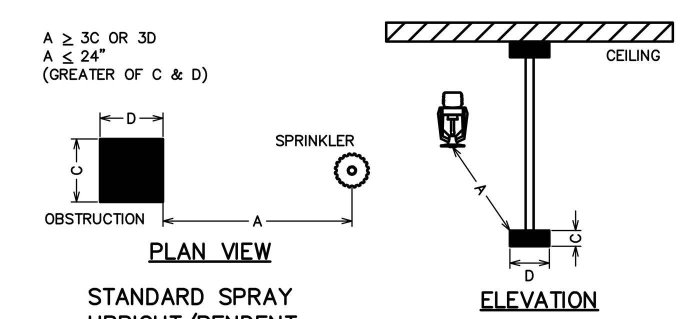


STANDARD SPRAY UPRIGHT/PENDENT

9 – OBSTRUCTION DISTANCE
NOT TO SCALE

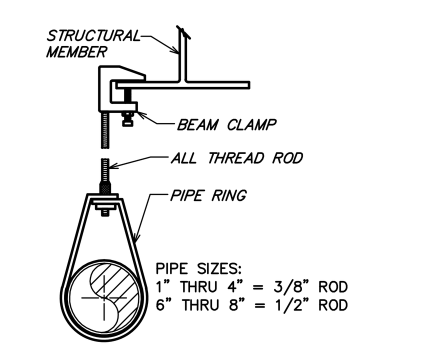


3 – PIPE HANGER BEAM CLAMP
NOT TO SCALE

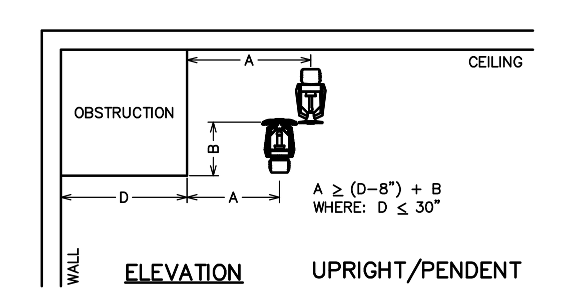


UPRIGHT/PENDENT

8 – SOFFIT OBSTRUCTION RULE
NOT TO SCALE

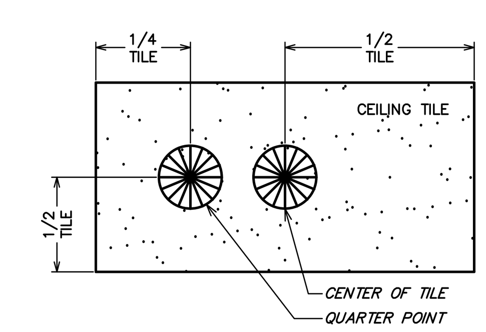


2 – SPRINKLER LOCATION
NOT TO SCALE

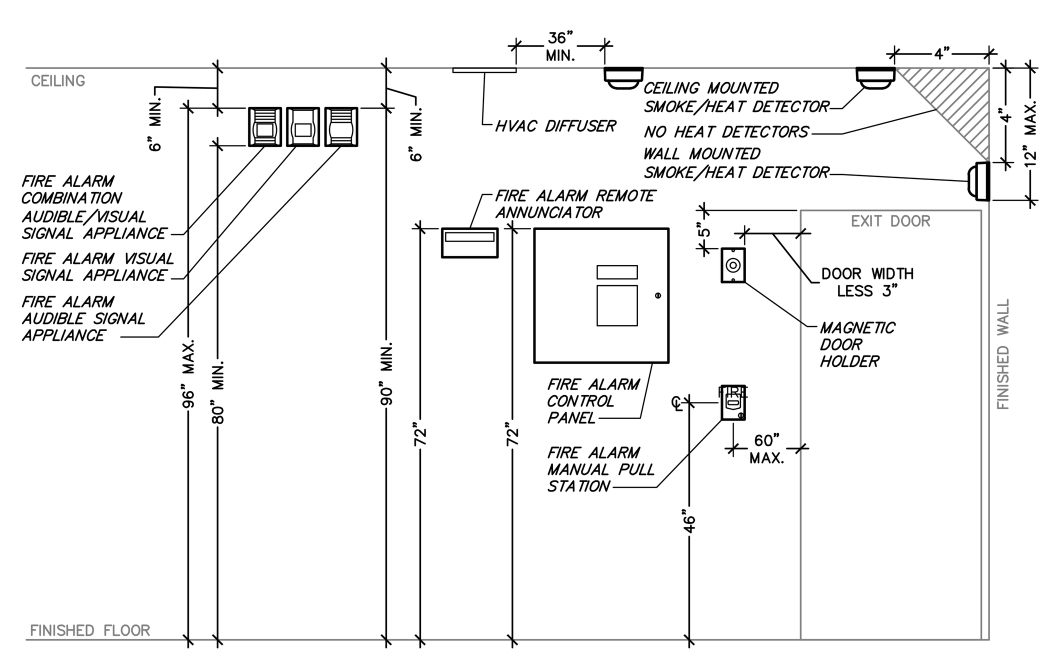


12 – TYPICAL DEVICE ELEVATION DETAIL
NOT TO SCALE

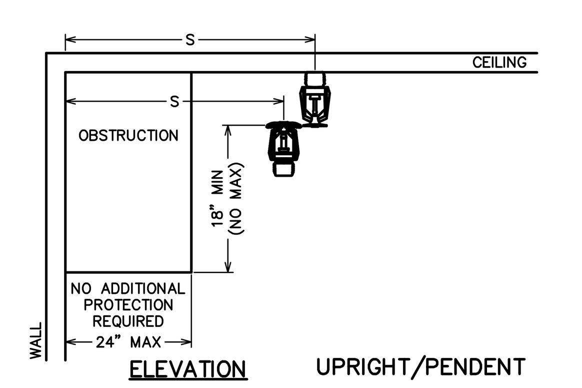


UPRIGHT/PENDENT

7 – OBSTRUCTION AGAINST WALL
NOT TO SCALE

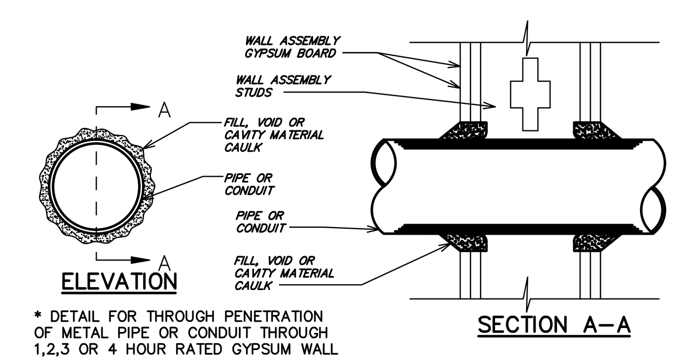


* DETAIL FOR THROUGH PENETRATION OF METAL PIPE OR CONDUIT THROUGH 1,2,3 OR 4 HOUR RATED GYPSUM WALL

1 – RATED PENETRATION DETAIL
NOT TO SCALE

Bergmeyer
BOS – 51 Sleeper St. 6th Floor Boston, MA 02210 617.542.1025
LA – 800 South Figueroa St. Suite 1080 Los Angeles, CA 90017 212.337.1090
www.bergmeyer.com

CONSULTANTS:
Schnackel engineers
800-581-0963
www.schnackel.com
SE JOB#: 200383

SEAL/ SIGNATURE:
STATE OF MISSOURI
GREGORY ROY SCHNACKEL
NUMBER E–026570
REGISTERED PROFESSIONAL ENGINEER
Date: 03/05/21
COA #: E–2009006642

| NO. | BY | DATE | DESCRIPTION |
|---|---|---|---|
| 1 | | 2021-03-09 | ADDENDUM #1 |
| | | 2021-01-11 | PERMIT/BID SET |
| | | 2020-12-21 | 75% SET |
| | | 2020-10-12 | DD SET |

SHAKE SHACK

SHAKE SHACK - LEE'S SUMMIT MO

LEE'S SUMMIT
MISSOURI
SHACK #1348

PERMIT/BID SET

FIRE PROTECTION DETAILS

DRAWN BY: DAK
CHECKED BY: GRS
JOB NO: 20068.00

# F501

TABLE OF CONTENTS:

SECTION 210000 – FIRE SUPPRESSION GENERAL CONDITIONS AND COMMISSIONING
SECTION 210500 – COMMON WORK RESULTS FOR FIRE SUPPRESSION
SECTION 210502 – TRENCHING AND BACKFILL FOR FIRE SUPPRESSION
SECTION 210548 – VIBRATION AND SEISMIC CONTROLS FOR FIRE SUPPRESSION PIPING AND EQUIPMENT
SECTION 210553 – IDENTIFICATION FOR FIRE SUPPRESSION PIPING AND EQUIPMENT
SECTION 210595 – FIRE STOPPING FOR FIRE SUPPRESSION SYSTEMS
SECTION 211300 – FIRE SUPPRESSION SPRINKLER SYSTEMS
SECTION 283100 – FIRE DETECTION AND ALARM

## SECTION 21000 – FIRE SUPPRESSION GENERAL CONDITIONS

PART 1 GENERAL

1.01 APPLICABILITY
- A. This section supplements all sections of the Specifications for Division 21 and shall apply to all phases of work hereinafter specified, shown on the Drawings, or required to provide a complete installation of approved fire suppression systems.
- B. The Drawings, General Conditions and General Provisions of the Contract apply to this Section and the other Sections of Division 21 of the specifications. Where conflicts arise between these documents, the more stringent provision will be applicable, subject to the interpretation of the Engineer.
- C. Furnish all labor, material, services, and skilled supervision necessary for the construction, erection, installation, connections, testing, and adjustment of all materials and electrical equipment specified herein, or shown or noted on the Drawings, and its delivery to the Owner, complete in all respects and ready for use.
- D. Products furnished but not installed under this section:
  1. Where plans indicate fixtures or equipment will be furnished by this Contractor for installation by other Contractors, this Contractor shall furnish all such equipment, complete in all respects and ready for installation.
  2. Drawings, instructions, and manuals supplied with equipment furnished under Division 21, but installed under other Divisions shall be carefully preserved and turned over to the installing Contractor.
- E. Products installed but not furnished under this section:
  1. Where plans indicate fixtures or equipment will be furnished by others, this Contractor shall provide all rough-in and supplies and shall connect such equipment to the fire suppression systems.
  2. Drawings, instructions, and manuals supplied with equipment furnished under separate Divisions but installed under Division 22 shall be carefully preserved and turned over to the Architect.

1.02 DEFINITIONS
- A. "Work" is hereby defined as, "The construction and services required by the Contract Documents whether completed or partially completed and includes all labor, materials, equipment, and services provided or to be provided by the Contractor to fulfill the Contractor's obligations. The work may constitute the whole or a part of the project."
- B. "Furnish" is hereby defined as, "To supply and deliver, unload, and inspect for damage."
- C. "Install" is hereby defined as, "To unpack, assemble, erect, apply, place, finish, cure, protect, clean, connect, and place into operation into the work."
- D. "Provide" is hereby defined as, "To furnish and install."
- E. "Connect" is hereby defined as, "To bring service to the equipment and make final attachment including necessary switches, outlets, boxes, terminations, etc."
- F. "Concealed" is hereby defined as, "Hidden from sight in chases, furred spaces, shafts, hung ceilings, embedded in construction, in crawl spaces, or buried."
- G. "Exposed" is hereby defined as, "Not installed underground nor concealed as defined by the Specifications."
- H. "Drawings" is hereby defined as, "All plans, details, equipment schedules, diagrams, sketches, etc. issued for the construction of the work."
- I. Subgrade Elevations: 4 inches below finish grade elevations indicated on drawings, unless otherwise indicated.
- J. Finish Grade Elevations: 4 inches above subgrade elevations indicated on drawings, unless otherwise indicated.

1.03 CODES AND STANDARDS
- A. Perform work in accordance with the applicable Building Code, Electrical Code, Fire Code, Mechanical Code, Plumbing Code, Energy Code, and all other applicable codes, amendments, and ordinances. Also perform all work in accordance with the Americans with Disabilities Act (ADA) and the Authority Having Jurisdiction (AHJ) including Fire Marshal(s).
- B. Perform work in accordance with Shake Shack design directive requirements where applicable.
- C. Perform work in accordance with the applicable utility companies serving the project. Make all arrangements with the utility companies for proper coordination of the work.
- D. Recognized Standards: Design, manufacture, testing and method of installation of all apparatus and materials furnished under the requirements of these Specifications shall conform to the latest publications or standard rules of National Fire Protection Association (NFPA), Factory Mutual Global, where applicable (FMG), Underwriters Laboratories, Inc. (U.L.), American Society for Testing and Materials (ASTM), American National Standards Institute (ANSI), National Electrical Code (NEC), and National Electrical Safety Code (NESC)
- E. The Contract Documents shall take precedence where the Contract Documents exceed code, Landlord, utility, or recognized standards requirements.

1.04 PERMITS AND FEES
- A. Permits, licenses, fees, inspections and arrangements required for the work under this Contract shall be obtained by the Contractor at his expense, unless otherwise indicated.
- B. All fees and scheduling associated with obtaining an accurate water flow test shall be at the Contractor's expense.

1.05 CONTRACT DRAWINGS
- A. The Contractor is responsible to obtain, fully understand, and coordinate the work with the complete set of Contract Documents. Any required corrections, including all associated costs, arising from issues caused by the Contractor's failure to understand and/or coordinate the work with the complete set of Contract Documents are the Contractor's sole responsibility.
- B. Work under these sections is diagrammatic unless indicated otherwise and is intended to convey the scope of work and indicate the general arrangement of piping, equipment, and accessories. Follow these drawings in laying out the work and verify spaces for the installation of these materials and equipment. Wherever a question exists as to the exact intended location of pipe, sprinklers, or equipment, obtain instructions from the Architect before proceeding with the work.
- C. Notify the Architect/Engineer for resolution if a discrepancy is discovered within the Contract Documents. Failure of the Contractor to notify the Architect/Engineer of discrepancies shall result in the resolution becoming the Contractor's responsibility and subject to the Architect/Engineer's review and possible rejection. Should the Architect/Engineer reject a discrepancy resolution of which they were not notified, the Contractor is fully responsible to correct the installation, including all associated costs, until approval of the installation is given by the Architect/Engineer.

1.06 EXISTING CONDITIONS
- A. Verify all existing conditions prior to beginning work.
- B. Any existing conditions indicated in the Contract Documents are based on information drawings provided by others and possibly limited field verification. The Contractor shall adjust for actual field conditions at no additional expense to the Owner.
- C. The Contractor shall visit the project site, review existing conditions against the Contract Documents, and familiarize himself with the work prior to bidding and start of the work. By signing the Contract, the Contractor acknowledges the site visit has been completed and the existing conditions are accepted.
- D. The Contractor shall notify the Architect of major discrepancies in writing so the appropriate modifications to the design can be made without delay to the project. The Contractor assumes full responsibility of adjusting for discrepancies of which the Architect is not informed.
- F. The Owner shall have first salvage right on all demolished equipment and materials. The Contractor shall dispose of all demolished equipment and materials the Owner rejects.
- G. The Contractor shall notify the Architect/Engineer of field discrepancies in writing so the appropriate modifications to the design can be made without delay to the project. The Contractor assumes full responsibility of adjusting for discrepancies of which the Architect/Engineer is not informed.
- H. Where connections are made between new work and existing work, the connections shall be made by using materials and methods to suit the actual conditions.
- I. Where existing conditions are shown to be removed, by means of a hatched pattern, on the Drawings, this Contractor shall perform all work required for removal. Existing pipe run-outs shall be removed all the way back to mains and capped using appropriate methods.
- J. Where existing work is to be modified, it shall be done in conformance with these specifications. Materials used shall be same as existing except where specified otherwise.

1.07 SUBMITTALS
- A. Shop Drawings:
  1. Furnish the Architect/Engineer shop drawing portfolios containing names of manufacturer and cut sheets of equipment to be used on the project. Use manufacturer's specification sheets identified by number indicated on drawings or schedules. Indicate catalog number on the cut sheets. As applicable, provide construction data, weight and dimensional data, performance data and listing data as part of the shop drawing submittal. Provide shop drawings for:
     - a. Fire Protection fixtures and equipment.
     - b. Fire Protection materials and accessories.
     - c. Product Data: Provide manufacturers catalogue information. Indicate valve data and ratings.
  2. Submittals are reviewed only for general compliance with the Contract Documents. Dimensions, quantities and details are not checked during submittal review. Review of the submittals does not relieve the Contractor of the responsibility for providing all materials, equipment and accessories necessary for a complete and operational system meeting the requirements of the project and the intent of the Contract Documents. The responsibility for coordination of substituted materials and equipment lies solely with the substituting Contractor.
  3. Approval shall not relieve the Contractor from responsibility for errors on the shop drawings.
  4. If the shop drawings deviate from the contract documents, the Contractor shall advise the Engineer of the deviations in writing accompanying the shop drawings, including the reasons for the deviations.
- B. Project Record Documents: Record actual locations of components and tag numbering.
- C. Operation and Maintenance Data: Include installation instructions and spare parts lists.
- D. Maintenance Data: Include assembly drawings, bearing data including replacement sizes, and lubrication instructions.

1.08 QUALITY ASSURANCE
- A. Manufacturer Qualifications: Company specializing in manufacturing the Products specified in this section with minimum five years experience.
- B. Installer Qualifications: Company specializing in performing the work of this section with minimum five years experience, approved by manufacturer.
- C. Products:
  1. Listed and classified by Underwriters Laboratories Inc. as suitable for the purpose specified and indicated.
  2. Listed and classified by the local Department of Buildings and furnished with an acceptance number, where applicable.
  3. Listed and classified by the Landlord's and/or Owner's insurance carrier, where applicable.
- D. All equipment and components shall be free of all rust/corrosion or any visible damage. All items not complying with this requirement shall be replaced without any change in the Contract amount.
- E. Equipment performance and accessories shall be as scheduled on the Drawings and specified herein. Inclusion in both locations is not a prerequisite to inclusion in the Contract. Equipment and accessories specified in either location shall be included in the Contract. Provide all necessary accessories and connections as required for a complete, functional system, including all required components reasonably inferred to as necessary although such components may or may not be specifically indicated in the Contract Documents.
- F. Code or utility company requirements shall supersede any conflicting requirements of this section.
- G. Fill Composition Test Reports: Results of laboratory tests on actual materials used; Compaction Density Test Reports.

1.09 DELIVERY, STORAGE, AND HANDLING
- A. Deliver and store valves in shipping containers, with labeling in place.
- B. Provide temporary protective coating on cast iron and steel valves.
- C. Provide temporary end caps and closures on piping and fittings. Maintain in place until installation.
- D. Protect motors stored on site from weather and moisture by maintaining factory covers and suitable weather-proof covering. For extended outdoor storage, remove motors from equipment and store separately.
- E. Equipment: Protect equipment from physical damage by storing off site until the project is ready for immediate installation. Provide temporary caps on all pipes to prevent debris from entering the pipe.

PART 2 PRODUCTS

2.01 SUBSTITUTIONS
- A. The manufacturers listed are listed to set minimum standards for quality, design, and functionality. The products of other manufacturers may be submitted, at the Contractor's option, during shop drawing review unless indicated otherwise. The products of other manufacturers shall meet or exceed all requirements of the Contract Documents. The Contractor accepts all responsibility for costs and coordination issues arising out of the substitution of materials or equipment, and the coordination of such substitutions with all other contractors and subcontractors.
- B. Sprinkler Systems: Conform work to NFPA 13 and all local requirements.
- C. Standpipe and Hose Systems: Conform to NFPA 14 and all local requirements.
- D. Welding Materials and Procedures: Conform to ASME Code.

PART 3 EXECUTION

3.01 COORDINATION OF WORK
- A. Examine the Contract Documents as a whole for the work of other trades. Coordinate all work accordingly.
- B. Work lines and established heights shall be in strict accordance with architectural drawings and specifications insofar as these drawings and specifications extend. Verify all dimensions shown and establish all elevations and detailed dimensions not shown.
- C. Promptly report to the Architect any delay or difficulties encountered in the installation of the work, which might prevent prompt and proper installation, or make it unsuitable to connect with or receive the work of others. Failure to so report shall constitute an acceptance of the work of other trades as being fit and proper for the execution of this work.
- D. Plan, lay out, and coordinate the work with all trades well enough in advance so that it proceeds with a minimum of interference to work that has not been completed and work that is in progress. Inform all trades of openings required for the work and provide all special frames, sleeves, and anchor bolts required. The fire suppression system layout may be altered to suit the conditions, prior to the installation of any work and without additional cost to the Owner. Conflicts arising from lack of coordination shall be this Contractor's responsibility.
- E. Wherever pipe runs in or above ceilings or walls, the Contractor shall arrange the run of pipe in such a manner that it does not interfere with grilles, diffusers, outlet boxes, luminaires, or other ceiling mounted items.
- F. Install systems, materials and equipment to provide for maximum headroom, where no ceiling height is established or indicated on the Drawings. Maintain access to equipment requiring service when selecting mounting elevations.
- G. Install systems, materials and equipment level and plumb, parallel and perpendicular to building lines where exposed to view, unless otherwise indicated.
- H. Conflicts arising from lack of coordination shall be this Contractor's responsibility. The Fire Suppression Contractor shall pay for all extra cutting and patching made necessary by his failure to properly direct such work at the correct time.
- I. Perform all work in conformity with the Contract Documents and afford other trades reasonable opportunity for the execution of their work. Properly connect and coordinate this work with the work of other trades at such time and in such a manner as not to delay or interfere with their work.
- J. Manufacturer's instruction sheets shall be followed explicitly in the installation of all equipment. Where manufacturer's instruction sheets conflict with requirements of these specifications or the Drawings, such conflicts shall be brought to the attention of the Architect/Engineer for clarification.
- K. All roofing penetrations shall be flashed and weather sealed by the roofing manufacturer's authorized roofing contractor at this Contractor's expense. This Contractor shall contract with the factory authorized roofing contractor for the specific roofing system applicable to this Project. The use of an unauthorized roofing contractor may result in removal and replacement of the penetration systems at this Contractor's expense.
- L. Although all such work is not specifically indicated, furnish and install all supplementary or miscellaneous items, appurtenances and devices incidental to or necessary for a sound, secure and complete installation.
- M. Verify and coordinate all requirements and installation details of all materials and equipment that are to be furnished under other Divisions and installed or connected under Division 22 prior to rough-in. Conflicts arising from lack of coordination shall be this Contractor's responsibility. As such, the Contractor is responsible to:
  1. Obtain and review shop drawings, product data, manufacturer's wiring diagrams, and manufacturer's instructions for equipment furnished under other sections.
  2. Determine connection locations and requirements.
  3. Sequence rough-in of fire suppression connections to coordinate with installation of equipment.

3.02 COORDINATION DRAWINGS
- A. Prepare coordination drawings to a scale of 1/4"=1'-0" or larger; detailing major elements, components, and systems of fire suppression equipment and materials in relationship with other systems, installations, and building components. Indicate locations where space is limited for installation and access and where sequencing and coordination of installations are of importance to the efficient flow of the work, including (but not necessarily limited to) the following:
  1. Indicate the proposed locations of conduits, equipment, and materials. Include the following:
     - a. Clearances required for maintaining Code required working space.
     - b. Equipment connections and support details.
     - c. Exterior wall and foundation penetrations.
     - d. Fire-rated wall and floor penetrations.
     - e. Sizes and location of required concrete pads and bases.
     - f. Indicate scheduling, sequencing, movement, and positioning of large equipment into the building during construction.
     - g. Prepare floor plans, elevations, and details to indicate penetrations in floors, walls, and ceilings and their relationship to other penetrations and installations.

3.03 EXAMINATION
- A. Verify field measurements are as indicated on the Drawings.
- B. Verify all pipe locations and sizes in field prior to fabrication or installation.
- C. Verify all equipment locations in field prior to installation. Coordinate final locations with all trades.

3.04 INTERFACE WITH OTHER PRODUCTS
- A. Install all pipe, equipment, and accessories to preserve fire resistance rating of partitions and other elements, using materials and methods specified.

3.05 FIELD QUALITY CONTROL
- A. Provide tests as necessary to establish the adequacy, quality, safety, completed status, and suitable operation of each system. Tests shall be conducted under the supervision of the Architect.
- B. Install all equipment, devices, pipe, and materials securely and in a neat and workmanlike manner in accordance with all applicable standards and codes.
- C. Install all equipment, pipe, and materials plumb and level and align and adjust for satisfactory operation.
- D. Install all equipment, pipe, and materials in accordance with the manufacturer's instructions and recommendations.
- E. Inspect all equipment, pipe, and materials for defects.

3.06 ERECTION
- A. Rigging:
  1. The Fire Suppression Contractor shall arrange for all labor and equipment required for the proper installation of the fire Suppression equipment in the locations indicated on the Drawings. Where crane rental or other erection is required, such costs shall be included in the Fire Suppression Contract, unless specific arrangements are made with the General Contractor to cover these costs.
- B. Supplemental Framing:
  1. Provide the design, fabrication, and erection of supplementary structural framing required for attachment of hangers or other devices supporting fire Suppression equipment. Provide framing members of standard rolled steel shapes, A-36 steel. Provide members welded to structural members equal to the specification for the main structural member. Provide "simple beam" type framing with end connections welded or bolted for shear loads. Use cantilevers when detailed or specifically approved by the Architect/Engineer. The Architect/Engineer's approval is required for location of supplementary framing. Use only certified welders. Design framing members for their actual loads, with allowable stresses specified by AISC, without excessive deflection and with consideration for rigidity under vibration, in accordance with standard structural practices. Show on shop drawing supplementary framing, including design loads, member size and location.

3.07 CUTTING, PATCHING, AND PIERCING
- A. Cutting of openings and installation of sleeves or frames through walls and surfaces shall be done in a neat workmanlike manner. Openings shall be cut only as large as required for the installation; sleeves and/or frames installed flush with finished surfaces and grouted in place. Surfaces around openings shall be left smooth and finished to match surrounding surface.
- B. Obtain written permission of the Architect/Engineer before cutting or piercing structural members. Use craftsmen skilled in their respective trades for cutting, fitting, repairing, patching of plaster, and finishing of materials including carpentry work, metal work or concrete work required for this work.
- C. Do not weaken walls, partitions, or floors with cutting. Holes required to be cut in floors must be drilled without breaking out around the holes. The Architect/Engineer will determine suitability of patching and/or refinishing requirements.
- D. The Fire Suppression Contractor is responsible for patching of all openings resulting from the installation or removal of fire Suppression equipment or materials.
- E. Provide and maintain temporary partitions or dust barriers adequate to prevent the spread of dust and dirt to adjacent areas.
- F. Patch existing finished surfaces and building components using new materials matching existing materials and experienced Subcontractors.
- G. Fire and Smoke Partition Penetrations: The Contractor shall familiarize himself with all fire rated construction and install his work so as to maintain the integrity of the fire code rating. Maintain rating of fire rated and smoke rated construction. Seal annular space around conduits. For fire and smoke rated floors, walls and partitions, use UL listed material that maintains fire rated wall and floor integrity.

3.08 CLEANING AND REPAIR
- A. Clean fire suppression parts to remove harmful materials.
- B. Clean exposed surfaces of all pipe, equipment, and accessories of all dirt, debris, splatter, and other deleterious materials. Follow the manufacturer's recommendations for cleaning as applicable.
- C. Repair or replace damaged pipe, equipment, and accessories, as directed by and to the satisfaction of the Architect, where marring or disfigurement has occurred. All pipe, equipment, and accessories shall be new.

3.09 TESTING AND INSPECTION
- A. Upon completion, the entire system shall be tested under operating conditions.
  1. All equipment shall be tested under service conditions and proven to operate properly and noiselessly.
  2. All additional tests as required throughout this Specification shall be completed with results reported back to the Architect/Engineer for review.
- B. Operate all equipment, after installation and connection. Inspect for improper connections and operation and correct deficiencies as required.
- C. Inspection:
  1. Upon completion of the work, the Contractor shall obtain certificates of inspection and approval from all City and State Authorities Having Jurisdiction.

3.10 PROJECT CLOSEOUT
- A. Project Record Documents: At project closeout, provide one printed copy and one electronic copy of project record drawings to the Owner. Information contained on project record drawings shall include, as a minimum,:
  1. Actual locations of all pipe, equipment, accessories, etc.
  2. Actual pipe sizes and elevations.
  3. Actual routing of all underfloor or below grade piping.
  4. Hydraulic calculation remote area data and associated flow test information.
- B. Operation and Maintenance Data: At project closeout, submit to the Architect two copies of descriptive literature, maintenance and operation data for all piping, equipment, accessories, and materials used. Include maintenance procedures, intervals, and parts list of each item installed under this contract. Include all manufacturer's guarantees and warranties. Also include:

END OF SECTION

## SECTION 210500 – COMMON WORK RESULTS FOR FIRE SUPPRESSION

PART 1 GENERAL

1.01 SECTION INCLUDES
- A. Pipe, fittings, valves, and connections for systems as applicable to this project. Sprinkler systems: New systems; Dry pipe systems; Wet pipe systems; Standpipe/hose systems; Below ground piping; Above ground piping.

PART 2 PRODUCTS

2.01 FIRE PROTECTION SYSTEMS
- A. Water Supply Testing for All Systems: Perform tests of all supply water sources to determine the potential for corrosion in the fire protection system including tests for microbes most commonly associated with Microbiologically Influenced Corrosion (MIC). Water samples shall be collected as directed by the product literature of the testing organization. Samples shall be delivered to the approved testing laboratory within 72 hours of the time the water sample is obtained. Test results shall be forwarded to the Owner and Engineer along with a report summarizing the recommended corrective action to mitigate the potential for MIC or other types of corrosion.
- B. The Contractor may use any of the following piping materials, at his option, provided the selected material meets with the approval of all State, local authorities and any utility company requirements. Verification of compliance of the selected piping material is the sole responsibility of the installing Contractor.

2.02 BURIED PIPING
- A. Copper Tube: ASTM B 75 (ASTM B 75M) or ASTM B 88 (ASTM B 88M), O60 or O50 temper: Type: Type K (A); Fittings: ASME B16.18, cast copper alloy or ASME B16.22, wrought copper and bronze, solder joint, pressure type; Joints: AWS A5.8 Classification BCuP-3 or BCuP-4 copper/silver braze.
- B. Cast Iron Pipe: AWWA C151/A21.51: Fittings: AWWA C110, standard thickness; Joints: AWWA C111, rubber gasket; Mechanical Couplings: Shaped composition sealing gasket, steel bolts, nuts, and washers.

2.03 ABOVE GROUND PIPING
- A. Steel Pipe: ASTM A 795 Schedule 10, ASTM A 53 Schedule 40, ASTM A 135 Schedule 10, ASTM A 135 UL listed light wall type, or ASTM A 795 Schedule 40, black: Steel Fittings: ASME B16.9, wrought steel, buttwelded, ASME B16.5, buttweld ends, ASTM A 234/A 234M, wrought carbon steel or alloy steel, ASME B16.5, steel flanges and fittings, or ASME B16.11, forged steel socket welded and threaded; Mechanical Grooved Couplings: Malleable iron housing clamps to engage and lock, "C" shaped elastomeric sealing gasket, steel bolts, nuts, and washers; galvanized for galvanized pipe; Mechanical Formed Fittings: Carbon steel housing with integral pipe stop and O-ring pocked and O-ring, uniformly compressed into permanent mechanical engagement onto pipe; Schedule 10 steel pipe will not be allowed on any dry pipe sprinkler systems, no exceptions; Threaded or cut groove fittings will not be allowed on any Schedule 10 system, no exceptions.
- B. Copper Tube: ASTM B 75 (ASTM B 75M) or ASTM B 88 (ASTM B 88M), H58 drawn temper: Type: Type M (C); Fittings: ASME B16.18, cast copper alloy or ASME B16.22, wrought copper and bronze solder joint, pressure type; Joints: AWS A5.8 Classification BCuP-3 or BCuP-4 copper/silver braze or ASTM B 32, alloy Sn95 solder.

2.04 PIPE HANGERS AND SUPPORTS
- A. Hangers for Pipe Sizes 1/2 to 1-1/2 inch: Malleable iron, adjustable swivel, split ring.
- B. Hangers for Pipe Sizes 2 inches and Over: Carbon steel, adjustable, clevis.
- C. Multiple or Trapeze Hangers: Steel channels with welded spacers and hanger rods.
- D. Wall Support for Pipe Sizes to 3 inches: Cast iron hook.
- E. Wall Support for Pipe Sizes 4 inches and Over: Welded steel bracket and wrought steel clamp.
- F. Vertical Support: Steel riser clamp.
- G. Floor Support: Cast iron adjustable pipe saddle, lock nut, nipple, floor flange, and concrete pier or steel support.
- H. Copper Pipe Support: Carbon steel ring, adjustable, copper plated.

2.05 GATE VALVES
- A. Up to and including 2 inches: Bronze body, bronze trim, rising stem, handwheel, solid wedge or disc, threaded ends.
- B. Over 2 inches: Iron body, bronze trim, rising stem pre-grooved for mounting tamper switch, handwheel, OS&Y, solid bronze or cast iron wedge, flanged or grooved ends.
- C. Over 4 inches: Iron body, bronze trim, non-rising stem with bolted bonnet, solid bronze wedge, flanged ends, iron body indicator post assembly.

2.06 BUTTERFLY VALVES
- A. Bronze Body: Stainless steel disc, resilient replaceable seat, threaded or grooved ends, extended neck, handwheel and gear drive and integral indicating device, and built-in tamper proof switch rated 10 amp at 115 volt AC.
- B. Cast or Ductile Iron Body: Cast or ductile iron, chrome or nickel plated ductile iron or aluminum bronze disc, resilient replaceable EPDM seat, wafer, lug, or grooved ends, extended neck, handwheel and gear drive and integral indicating device, and internal tamper switch rated 10 amp at 115 volt AC.

2.07 CHECK VALVES
- A. Up to and including 2 inches: Bronze body and swing disc, rubber seat, threaded ends.
- B. Over 2 inches: Iron body, bronze trim, swing check with rubber disc, renewable disc and seat, flanged ends.
- C. 4 inches and Over: Iron body, bronze disc, stainless steel spring, resilient seal, threaded, wafer, or flanged ends.

2.08 DRAIN VALVES
- A. Compression Stop: Bronze with hose thread nipple and cap.
- B. Ball Valve: Brass with cap and chain, 3/4 inch hose thread.

PART 3 EXECUTION

3.01 PREPARATION
- A. Ream pipe and tube ends. Remove burrs. Bevel plain end ferrous pipe. Remove scale and foreign material, from inside and outside, before assembly. Prepare piping connections to equipment with flanges or unions.

3.02 INSTALLATION
- A. Install sprinkler system and service main piping, hangers, and supports in accordance with NFPA 13.
- B. Install standpipe piping, hangers, and supports in accordance with NFPA 14.
- C. Comply with all materials, design and installation requirements of Factory Mutual.
- D. Route piping in orderly manner, plumb and parallel to building structure. Maintain gradient.
- E. Install piping to conserve building space, to not interfere with use of space and other work.
- F. Group piping whenever practical at common elevations.
- G. Sleeve pipes passing through partitions, walls, and floors.
- H. Install piping to allow for expansion and contraction without stressing pipe, joints, or connected equipment.
- I. Inserts: Provide inserts for placement in concrete formwork; Provide inserts for suspending hangers from reinforced concrete slabs and sides of reinforced concrete beams; Provide hooked rod to concrete reinforcement section for inserts carrying pipe over 4 inches; Where concrete slabs form finished ceiling, locate inserts flush with slab surface; Where inserts are omitted, drill through concrete slab from below and provide through-bolt with recessed square steel plate and nut recessed into and grouted flush with slab.
- J. Pipe Hangers and Supports: Install hangers to provide minimum 1/2 inch space between finished covering and adjacent work; Place hangers within 12 inches of each horizontal elbow; Use hangers with 1-1/2 inch minimum vertical adjustment. Design hangers for pipe movement without disengagement of supported pipe; Support vertical piping at every other floor. Support riser piping independently of connected horizontal piping; Where several pipes can be installed in parallel and at same elevation, provide multiple or trapeze hangers; Provide copper plated hangers and supports for copper piping.
- K. Slope piping and arrange systems to drain at low points. Use eccentric reducers to maintain top of pipe level.
- L. Where exposed to view in finished areas, prepare pipe, fittings, supports, and accessories for finish painting. Where pipe support members are welded to structural building framing, scrape, brush clean, and apply one coat of zinc rich primer to welding.
- M. Do not penetrate building structural members unless indicated or where approval from the project Structural Engineer has been given in writing.
- N. Provide sleeves when penetrating footings and floors. Seal and fire stop pipe and sleeve penetrations to achieve fire resistance equivalent to fire separation required.
- O. When installing more than one piping system material, ensure system components are compatible and joined to ensure the integrity of the system. Provide necessary joining fittings. Ensure flanges, union, and couplings for servicing are consistently provided.
- P. Install valves with stems upright or horizontal, not inverted. Remove protective coatings prior to installation.
- Q. Provide drain valves at main shut-off valves, low points of piping and apparatus.

END OF SECTION

## SECTION 210502 – TRENCHING AND BACKFILL FOR FIRE SUPPRESSION

PART 1 GENERAL

1.01 SECTION INCLUDES
- A. Backfilling and compacting for utilities inside and outside the building.

1.02 PROJECT CONDITIONS
- A. Provide sufficient quantities of fill to meet project schedule and requirements. When necessary, store materials on site in advance of need.
- B. When fill materials need to be stored on site, locate stockpiles where designated: Separate differing materials with dividers or stockpile separately to prevent intermixing; Prevent contamination; Protect stockpiles from erosion and deterioration of materials.
- C. Verify that survey bench marks and intended elevations for the Work are as indicated.
- D. Protect bench marks, survey control points, existing structures, fences, sidewalks, paving, and curbs from excavating equipment and vehicular traffic.

PART 2 PRODUCTS

2.01 FILL MATERIALS
- A. General Fill: Subsoil excavated on-site: Graded; Free of lumps larger than 3 inches, rocks larger than 2 inches, and debris.
- B. Structural Fill: Subsoil excavated on-site: Graded; Free of lumps larger than 3 inches, rocks larger than 2 inches, and debris.
- C. Granular Fill - Gravel: Pit run stone; free of shale, clay, friable material and debris.
- D. Granular Fill - Pea Gravel: Natural stone; free of clay, shale, organic matter.
- E. Sand: Natural river or bank sand; free of silt, clay, loam, friable or soluble materials, and organic matter.
- F. Topsoil: Topsoil excavated on-site: Select; Free of roots, rocks larger than 1/2 inch, subsoil, debris, large weeds and foreign matter; Acidity range (pH) of 5.5 to 7.5; Containing a minimum of 4 percent and a maximum of 25 percent inorganic matter.

PART 3 EXECUTION

3.01 EXAMINATION
- A. Identify required lines, levels, contours, and datum locations.
- B. Locate, identify, and protect utilities and construction that remains and protect from damage.
- C. Notify utility company to remove and relocate utilities not required by new construction.

3.02 TRENCHING
- A. Slope banks of excavations deeper than 4 feet to angle of repose or less until shored.
- B. Do not interfere with 45 degree bearing splay of foundations.
- C. Remove large stones and other hard matter which could damage piping or impede consistent backfilling or compaction.
- D. Stockpile excavated material to be re-used in area designated on site.
- E. Remove excess excavated material from site.

3.03 PREPARATION FOR UTILITY PLACEMENT
- A. Cut out soft areas of subgrade not capable of compaction in place. Backfill with general fill.
- B. Compact subgrade to density equal to or greater than requirements for subsequent fill material.
- C. Until ready to backfill, maintain excavations and prevent loose soil from falling into excavation.

3.04 BACKFILLING
- A. Backfill to contours and elevations indicated using unfrozen materials.
- B. Fill up to finish grade or slab elevations unless otherwise indicated.
- C. Employ a placement method that does not disturb or damage other work.
- D. Do not fill over porous, wet, frozen or spongy subgrade surfaces.
- E. Maintain optimum moisture content of fill materials to attain required compaction density.
- F. Granular Fill: Place and compact materials in equal continuous layers not exceeding 8 inches compacted depth.
- G. Soil Fill: Place and compact material in equal continuous layers not exceeding 8 inches compacted depth.
- H. Thrust bearing surfaces: Fill with concrete.
- I. Compaction Density Unless Otherwise Specified or Indicated: Under paving, slabs-on-grade, and similar construction: 97 percent of maximum dry density; At other locations: 95 percent of maximum dry density.

3.05 BEDDING AND FILL AT SPECIFIC LOCATIONS
- A. Use general fill unless otherwise specified or indicated.
- B. Utility Piping, Conduits, and Duct Bank: Bedding: Use granular fill; Cover with general fill; Fill up to finish grade elevation; Compact in maximum 8 inch lifts to 95 percent of maximum dry density.

3.06 TOLERANCES
- A. Top Surface of General Backfilling: Plus or minus 1 inch from required elevations.
- B. Top Surface of Backfilling Under Paved Areas: Plus or minus 1 inch from required elevations.

3.07 FIELD QUALITY CONTROL
- A. Perform compaction density testing on compacted fill in accordance with ASTM D1556, ASTM D2167, ASTM D2922, or ASTM D3017.
- B. Evaluate results in relation to compaction curve determined by testing uncompacted material in accordance with ASTM D 698 ("standard Proctor"), ASTM D 1557 ("modified Proctor"), or AASHTO T 180.
- C. If tests indicate work does not meet specified requirements, remove work, replace and retest.
- D. Frequency of Tests: Every two feet.

3.08 CLEAN-UP
- A. Leave unused materials in a neat, compact stockpile.
- B. Remove unused materials, leave area in a clean and neat condition. Grade stockpile area to prevent standing surface water.
- C. Leave borrow areas in a clean and neat condition. Grade to prevent standing surface water.

END OF SECTION

## SECTION 210548 – VIBRATION AND SEISMIC CONTROLS FOR FIRE SUPPRESSION PIPING AND EQUIPMENT

PART 1 GENERAL

1.01 SECTION INCLUDES
- A. Concrete housekeeping pads; Inertia bases for fire pumps; Vibration isolators; Seismic restraints.

PART 2 PRODUCTS

2.01 MANUFACTURERS
- A. Isolation Technology, Inc; Kinetics Noise Control, Inc; Mason Industries.

2.02 SEISMIC RESTRAINTS
- A. Type: Non-directional and double acting unit consisting of interlocking steel members restrained by neoprene elements.
- B. Elements: Replaceable neoprene, minimum of 0.75 inch thick with minimum 1/8 inch air gap.
- C. Capacity: 4 times load assigned to mount groupings at 0.4 inch deflection.
- D. Attachment Points and Fasteners: Capable of withstanding 3 times rated load capacity of seismic snubber.

PART 3 EXECUTION

3.01 INSTALLATION
- A. Install in accordance with manufacturer's instructions.
- B. On closed spring isolators, adjust so side stabilizers are clear under normal operating conditions.
- C. Support piping connections to equipment mounted on isolators using isolators or resilient hangers for scheduled distance: Up to 4 Inches Pipe Size: First three points of support; 5 to 8 Inches Pipe Size: First four points of support; 10 inches Pipe Size and Over: First six points of support; Select three hangers closest to vibration source for minimum 1.0 inch static deflection or static deflection of isolated equipment. Select remaining isolators for minimum 1.0 inch static deflection or 1/2 static deflection of isolated equipment.

3.02 FIELD QUALITY CONTROL
- A. Inspect isolated equipment after installation and submit report. Include static deflections.

3.03 SCHEDULES
- A. Pipe Isolation Schedule.
  1. 1 Inch Pipe Size: Isolate 120 diameters from equipment.
  2. 2 Inch Pipe Size: Isolate 90 diameters from equipment.
  3. 3 Inch Pipe Size: Isolate 80 diameters from equipment.
  4. 4 Inch Pipe Size: Isolate 75 diameters from equipment.
  5. 6 Inch Pipe Size: Isolate 60 diameters from equipment.
  6. 8 Inch Pipe Size: Isolate 60 diameters from equipment.

END OF SECTION

## SECTION 210553 – IDENTIFICATION FOR FIRE SUPPRESSION PIPING AND EQUIPMENT

PART 1 GENERAL

1.01 SECTION INCLUDES
- A. Nameplates; Tags; Stencils; Pipe Markers.

PART 2 PRODUCTS

2.01 MANUFACTURERS
- A. Brady Corporation; Champion America, Inc; Seton Identification Products.

2.02 NAMEPLATES
- A. Description: Laminated three-layer plastic with engraved letters: Letter Color: White; Letter Height: 1/4 inch; Background Color: Black.

2.03 TAGS
- A. Metal Tags: Brass with stamped letters; tag size minimum 1-1/2 inch diameter with smooth edges.

2.04 STENCILS
- A. Stencils: With clean cut symbols and letters of following size:
  1. 3/4 to 1-1/4 inch Outside Diameter of Insulation or Pipe: 8 inch long color field, 1/2 inch high letters.
  2. 1-1/2 to 2 inch Outside Diameter of Insulation or Pipe: 8 inch long color field, 3/4 inch high letters.
  3. 2-1/2 to 6 inch Outside Diameter of Insulation or Pipe: 12 inch long color field, 1-1/4 inch high letters.
  4. 8 to 10 inch Outside Diameter of Insulation or Pipe: 24 inch long color field, 2-1/2 inch high letters.
  5. Equipment: 2-1/2 inch high letters.
- B. Semi-gloss enamel, colors conforming to ASME A13.1.

2.05 PIPE MARKERS
- A. Plastic Pipe Markers: Factory fabricated, flexible, semi- rigid plastic, preformed to fit around pipe or pipe covering; minimum information indicating flow direction arrow and identification of fluid being conveyed.
- B. Plastic Tape Pipe Markers: Flexible, vinyl film tape with pressure sensitive adhesive backing and printed markings.

PART 3 EXECUTION

3.01 INSTALLATION
- A. Install plastic and plastic tape pipe markers in accordance with manufacturer's instructions.
- B. Identify pumps and valves with plastic nameplates. Small devices, such as in-line pumps, may be identified with tags.
- C. Identify valves in main and branch piping with tags.

END OF SECTION

## SECTION 210595 – FIRE STOPPING FOR FIRE SUPPRESSION SYSTEMS

PART 1 GENERAL

1.01 SECTION INCLUDES
- A. Firestopping materials and Firestopping of all penetrations and interruptions to fire rated assemblies, whether indicated on the Drawings, and other openings indicated.

PART 2 PRODUCTS

2.01 FIRESTOPPING ASSEMBLIES
- A. Firestopping: Any material meeting requirements: Fire Ratings: Use any system listed by UL or FM or tested in accordance with ASTM E 814 or ASTM E 119 that has F Rating equal to fire rating of penetrated assembly and minimum T Rating Equal to F Rating and that meets all other specified requirements.

2.02 MATERIALS
- A. Elastomeric Silicone Firestopping: Single or multiple component silicone elastomeric compound and compatible silicone sealant; conforming to the following: Durability and Longevity: Permanent; Color: Manufacturer's standard color; Manufacturers: A/D Fire Protection Systems Inc; 3M Fire Protection Products; Specified Technologies, Inc.
- B. Foam Firestoppping: Single or multiple component foam compound; conforming to the following: Durability and Longevity: Permanent; Color: Manufacturer's standard color; Manufacturers: A/D Fire Protection Systems Inc; 3M Fire Protection Products; Specified Technologies, Inc.
- C. Fiber Packing Material: Mineral or ceramic fiber packing insulation; conforming to the following: Durability and Longevity: Permanent; Manufacturers: A/D Fire Protection Systems Inc; 3M Fire Protection Products; Pecora Corporation; Specified Technologies, Inc; USG.
- D. Firestop Pillows: Formed mineral fiber pillows; conforming to the following: Durability and Longevity: Permanent; Manufacturers: A/D Fire Protection Systems Inc; Grace Construction Products; 3M Fire Protection Products; Nelson Firestop Products; Specified Technologies, Inc.

PART 3 EXECUTION

3.01 PREPARATION AND INSTALLATION
- A. Clean substrate surfaces of dirt, dust, grease, oil, loose material, or other matter which may affect bond of firestopping material.
- B. Install materials in manner described in fire test report and in accordance with manufacturer's instructions.
- C. Install labeling required by code.

3.02 CLEANING AND PROTECTION
- A. Clean adjacent surfaces of firestopping materials.
- B. Protect adjacent surfaces from damage by material installation.

END OF SECTION

## SECTION 211300 – FIRE-SUPPRESSION SPRINKLER SYSTEMS

PART 1 GENERAL

1.01 SECTION INCLUDES
- A. Wet-pipe sprinkler system; Dry-pipe sprinkler system; Dry pendant sprinklers; System design, installation, and certification; Fire department connections.

PART 2 PRODUCTS

2.01 SPRINKLER SYSTEM
- A. Sprinkler System: Provide coverage for entire building unless noted otherwise on the Drawings.
- B. Occupancy: As required by NFPA hazard classifications or as indicated on the Drawings whichever is more stringent.
- C. Water Supply: Determine volume and pressure from water flow test data.
- D. Interface system with building fire and smoke alarm system.
- E. Provide fire department connections in the location(s) indicated on the Drawings or as approved by the local authority.

2.02 SPRINKLERS
- A. All Sprinkler Fusible Links: Fusible solder link type or glass bulb type, temperature rated for specific area hazard.
- B. Suspended Acoustical Ceiling Type: Semi-recessed pendant type with matching push on escutcheon plate; Finish: Chrome plated; Escutcheon Plate Finish: Chrome plated.
- C. Hard Surface Ceiling Type: Recessed pendant type with flush cover plate; Finish: Brass, Chrome or Enamel; Cover and Escutcheon Plate Finish: Chrome or Enamel, color as selected from manufacturer's colors; Adjustment: 1/2" minimum.
- D. Exposed Area Type: Standard upright type; Finish: Brass.
- E. Sidewall Type: Semi-recessed horizontal sidewall type with matching push on escutcheon plate; Finish: Chrome plated.or Enamel, color as selected from manufacturer's standard colors; Escutcheon Plate Finish: Chrome plated.
- F. Dry Sprinklers: Standard pendant type with matching push on escutcheon plate with flush cover plate; Finish: Chrome Plated or Enamel, color as selected.from manufacturer's standard colors; Escutcheon Plate Finish: Chrome Plated or Enamel, color as selected.from manufacturer's standard colors.
- G. Dry Pendant Sprinklers: Semi-recessed pendant type, with matching push on escutcheon plate; Finish: Chrome Plated or Enamel, color as selected.from manufacturer's standard colors; Escutcheon Plate Finish: Chrome Plated or Enamel, color as selected.from manufacturer's standard colors.
- H. Guards: Finish to match sprinkler finish.

2.03 PIPING SPECIALTIES
- A. Dry Pipe Sprinkler Alarm Valve: Check type valve with divided seat ring, rubber faced clapper to automatically actuate water motor alarm and electric alarm, with accelerator; with test and drain valve.
- B. Electric Alarm: Electrically operated red enameled gong with pressure alarm switch.
- C. Water Flow Switch: Vane type switch for mounting horizontal or vertical, with two contacts; rated 10 amp at 125 volt AC and 2.5 amp at 24 volt DC.
- D. Fire Department Connections: Type: Flush mounted wall type with chrome plated finish; Outlets: Two way with thread size to suit fire department hardware; threaded dust cap and chain of matching material and finish; Drain: 3/4 inch automatic drip, outside; Label: "Sprinkler - Fire Department Connection".
- E. Supervisory Switches: As required by NFPA and Local Authorities.

2.04 AIR COMPRESSOR
- A. Compressor: Single unit, electric motor driven, motor, motor starter, safety valves, check valves, air maintenance device incorporating electric pressure switch and unloader valve.
- B. Electrical Characteristics: 120 volts, single phase, 60 Hz.

PART 3 EXECUTION

3.01 INSTALLATION
- A. Install in accordance with referenced NFPA design and installation standard.
- B. Install equipment in accordance with manufacturer's instructions.
- C. Install buried shut-off valves in valve box. Provide post indicator in the location(s) indicated on the Drawings or as approved by the local authority.
- D. Provide approved backflow preventer assembly at sprinkler system water source connection.
- E. Locate fire department connection with sufficient clearance from walls, obstructions, or adjacent siamese connectors to allow full swing of fire department wrench handle.
- F. Locate outside alarm gong or horn/strobe on building wall as indicated or required by local jurisdiction.
- G. Place pipe runs to minimize obstruction to other work.
- H. Place piping in concealed spaces above finished ceilings.
- I. Center sprinklers in two directions in ceiling tile and provide piping offsets as required.
- J. Center all sprinklers symmetrically with respect to all soffits, light fixtures, air diffusers and other ceiling features. Approval of the Architect and Engineer at shop drawing review will be required for all sprinkler head layouts. Provide offsets and adjustments as required by the Architect/Engineer's review comments.
- K. Apply masking tape or paper cover to ensure concealed sprinklers, cover plates, and sprinkler escutcheons do not receive field paint finish. Remove after painting. Replace painted sprinklers.
- L. Install air compressor on vibration isolators.
- M. Flush entire piping system of foreign matter.
- N. Install guards on sprinklers where exposed to damage.
- O. Hydrostatically test entire system.
- P. Require test be witnessed by Fire Marshal and authority having jurisdiction.

3.02 INTERFACE WITH OTHER PRODUCTS
- A. Ensure required devices are installed and connected as required to fire alarm system.
- B. Verify that proper power supply is available prior to ordering equipment. Verify proper voltage, phase and current rating of power supply and inform Engineer of any deviations prior to order, connection of equipment or start-up. Responsibility for verification of proper power supply voltage and any product returns or damage resulting from incorrect connections shall rest with this Contractor.

END OF SECTION

## SECTION 283100 – FIRE DETECTION AND ALARM

PART 1 GENERAL

1.01 ADMINISTRATIVE
- A. The word "should" used in NFPA 72 shall be considered a mandatory requirement.

1.02 REFERENCE DIRECTIVE
- A. In accordance with Shake Shack Directive, Division 28-02, ADT shall be utilized for all fire alarm monitoring services when required.
- B. The preferred method of communication, from the fire alarm panel to ADT's central station, is cellular.
  1. Fire alarm panels with integral dialers, if accepted by the Authority Having Jurisdiction, shall be compatible with ADT's central station.
- C. Fire Alarm Panels:
  1. Whenever possible, Siemens, Simplex, Edwards, or equivalent.

1.03 PREPARATION
- A. Examine the plans of all trades to determine scope of fire alarm and detection work including, but not limited to:
  1. Architectural plans to determine occupancy classification, occupant loads, and locations where voice alarm will be required.
  2. Fire sprinkler plans, including fire sprinkler plans that are designed by others, to determine locations of all flow switches, tamper switches, post indicator valves, corrosion monitoring probes, dry-type system compressors, and fire pumps.
  3. Mechanical plans to determine locations of all individual HVAC units rated equal to or greater than 2,000 cubic feet per minute (CFM), locations of HVAC units serving the same room or area where the total aggregate capacity of the units is equal to or greater than 2,000 cubic feet per minute (CFM), locations of HVAC units sharing a common return air plenum where the total aggregate capacity of the units is equal to or greater than 2,000 cubic feet per minute (CFM), smoke dampers, smoke exhaust equipment, and Type 1 grease hood fire suppression systems.
- B. Coordinate all notification appliance colors with the Architect.

1.04 SYSTEM DESIGN
- A. Provide a fully engineered Code-compliant design of the fire detection and alarm system from a Fire Alarm Designer.
- B. The Fire Alarm Designer shall be a NICET Level III or IV (3 or 4) certified fire alarm technician, registered fire protection engineer, employee of the fire alarm control unit manufacturer, or Contractor with experience designing fire detection and alarm systems in the jurisdictional area.
- C. The Fire Alarm Designer shall develop all fire detection and alarm plans, riser diagrams, calculations, and equipment submittal packages required by NFPA 72-2013 section 7.4 and the Authority Having Jurisdiction and submit the same as a deferred permit.
- D. The General Contractor shall include all costs associated with the development of the fully engineered fire detection and alarm plans and permit fees in the Bid.
- E. Any fire detection and alarm information indicated on the Drawings is strictly for the purpose of establishing a minimum criteria to aid the Fire Alarm Designer in the design of the fully engineered fire alarm drawings. The Fire Alarm Designer is responsible to provide a design that is fully compliant with all applicable Codes and jurisdictional requirements.

1.05 CODES AND STANDARDS
- A. The design and work shall be in complete accordance with the applicable Building Code, Electrical Code, Fire Code, Mechanical Code, and all other applicable codes, amendments, and ordinances. The design and work shall also be in complete accordance with:
  1. Occupational Safety and Health Administration (OSHA) Regulations.
  2. Americans with Disabilities Act (ADA).
  3. The Authority Having Jurisdiction.
  4. Landlord requirements including Tenant Criteria Manuals and Lease Exhibits.
  5. Utility company requirements.
- B. Recognized Standards: Design, manufacture, testing and method of installation of all apparatus and materials furnished under the requirements of these Specifications shall conform to the latest publications or standard rules of Institute of Electrical and Electronic Engineers (IEEE), National Electrical Manufacturers Association (NEMA), Underwriters Laboratories, Inc. (U.L.), National Fire Protection Association (NFPA), American Society for Testing and Materials (ASTM), American National Standards Institute (ANSI), National Electrical Code (NEC), National Electrical Safety Code (NESC), National Electrical Contractors Association (NECA), and American Institute of Steel Construction (AISC).
- C. Code, Landlord, and utility company requirements supersede any requirements of the Drawings and/or Specifications. The Contract Documents take precedence where the Contract Documents exceed code, Landlord, utility, or recognized standards requirements.

1.06 SUBMITTALS FOR ENGINEER REVIEW:
- A. Furnish the following submittals to the Architect for review by the Engineer:
  1. Fully engineered design drawings, approved by the Authority Having Jurisdiction.
  2. Product data for all components.
- B. Use manufacturer's specification sheets identified by number indicated on drawings or schedules.
- C. Indicate catalog number on the cut sheets.
- D. Submittals are reviewed only for general compliance with the Contract Documents. Dimensions, quantities and details are not checked during submittal review. Review of the submittals does not relieve the Contractor of the responsibility for providing all materials, equipment and accessories necessary for a complete and operational system meeting the requirements of the project and the intent of the Contract Documents. The responsibility for coordination of substituted materials and equipment lies solely with the substituting Contractor.

PART 2 PRODUCTS

2.01 GENERAL
- A. All new fire alarm initiating devices, including new initiating devices added to existing systems, shall be of the same manufacturer as the control unit and fully compatible with the system.
- B. Substitutions:
  1. The products specified in the Contract Documents constitute the Basis of Design for the Construction Documents and set minimum standards for quality, design, and functionality. Other products are permitted to be submitted, at the Contractor's option, during shop drawing review unless indicated otherwise. Any substitute products shall meet or exceed all requirements specified. Any costs and coordination issues arising out of any substitution, including coordination with all other contractors and subcontractors and any associated costs, is the substituting contractor's sole responsibility.
  2. The Designer is responsible for determining all Landlord fire detection and alarm requirements including all required systems, components, and interconnections with the Landlord system.

2.02 EXISTING FIRE ALARM AND DETECTION SYSTEMS
- A. Do not take existing portions of system out of service until new portions are fully operational, tested, and connected to existing system.
- B. Provide all equipment and materials including all necessary control units, expansion cards, power supplies, etc. required to connect new components into existing fire detection and alarm system.
  1. All new notification appliances shall match the existing including the audible tones of existing audible appliances.
- C. The Contractor may, at his option, choose to replace the existing fire detection and alarm system in lieu of integrating new components into the existing system. However that replacement shall be at no additional expense to the Owner.

2.03 NEW FIRE ALARM AND DETECTION SYSTEMS
- A. Fire Detection and Alarm System:
  1. Control Unit: Addressable control unit with the following minimum features:
     - a. Central microprocessor which is capable of communicating with, controlling, and monitoring all external devices.
     - b. Customizable operating parameters stored in non-volatile memory.
     - c. Real time clock to denote actual time of occurrence of system events for the display, history buffers, and external reporting devices.
     - d. LCD display.
     - e. Color-coded system status LEDs to indicate:
       1. AC Power.
       2. Fire Alarm.
       3. Pre-Alarm Warning.
       4. Supervisory.
       5. Trouble.
       6. Alarm Silence.
       7. Supervisory Silence.
       8. Trouble Silence.
     - f. Alphanumeric keypad.
     - g. Programmable via the keypad or portable keyboard.
       1. Capabilities for programming via a laptop personal computer are permitted only when programming capabilities via the keypad or portable keyboard are also supported. The system is not permitted to require a laptop personal computer as the sole means of programming.
       2. Access to programming shall be secured by password.
     - h. Form-C relays for Alarm, Supervisory, and Trouble signals.
     - i. Capable of supporting all initiating devices and auxiliary devices connected to the system plus 25 percent spare capacity.
     - j. Two configurable notification appliance circuits (NAC).
  2. Communicator: Digital Alarm Communicator Transmitter (DACT) connected to central station.
  3. Secondary Power: Storage battery and battery charger capable of operating entire system for period of time specified by NFPA 72 plus 25 percent spare capacity.

RELEASE FOR CONSTRUCTION
AS NOTED ON PLANS REVIEW
DEVELOPMENT SERVICES
LEE'S SUMMIT, MISSOURI
03/10/2021

Bergmeyer

BOS
51 Sleeper St.
6th Floor
Boston, MA 02210
617.542.1025

LA
800 South Figueroa St.
Suite 1080
Los Angeles, CA 90017
212.337.1090

www.bergmeyer.com

CONSULTANTS:

Schnackel engineers
800-581-0963
www.schnackel.com
SE JOB#: 200383

SEAL/ SIGNATURE:

STATE OF MISSOURI
GREGORY ROY SCHNACKEL
NUMBER
E-026570
REGISTERED PROFESSIONAL ENGINEER

Date: 03/05/21
COA #: E-2009006642

| NO. | BY | DATE | DESCRIPTION |
|---|---|---|---|
| 1 | | 2021-03-09 | ADDENDUM #1 |
| | | 2021-01-11 | PERMIT/BID SET |
| | | 2020-12-21 | 75% SET |
| | | 2020-10-12 | DD SET |

SHAKE SHACK

SHAKE SHACK - LEE'S SUMMIT MO

LEE'S SUMMIT
MISSOURI
SHACK #1348

PERMIT/BID SET

FIRE PROTECTION SPECIFICATIONS

| | |
|---|---|
| DRAWN BY: | DAK |
| CHECKED BY: | GRS |
| JOB NO: | 20068.00 |

F590

RELEASE FOR CONSTRUCTION
AS NOTED ON PLANS REVIEW
DEVELOPMENT SERVICES
LEE'S SUMMIT, MISSOURI
03/10/2021

TABLE OF CONTENTS:
SECTION 283100 – FIRE DETECTION AND ALARM

4. Auxiliary Battery Cabinet: As required for the batteries installed within.
5. Relay Module: As required for a complete operational system.
6. Remote Annunciator:
a. Compatible with the control unit; coordinate finish color with the Architect.
b. Provide when control unit is installed at a location other than the First Responder's primary point of entry.

B. Voice Alarm System:
1. Control Unit: UL 864 control unit with the following minimum features:
a. Central microprocessor which is capable of distributing and controlling emergency voice messages to all associated speakers.
b. Capability to interface with Local Operator Console (LOC), distributed audio amplifiers, remote paging units, remote microphones, and fire fighters' telephone units.
c. Expandable integral audio amplifier.
d. Integral digital message generator capable of producing fourteen unique messages, up to 60 seconds per message.
e. Custom message recording capability using the local microphone, USB port, or external audio input.
f. Integral tone generator with field-selectable leading and trailing tones.
g. Field-selectable repeat cycles.
h. Integral supervised microphone.
i. Push Button Controls for the following:
1. All call.
2. System control.
3. Speaker zone select.
4. Message select.
5. Diagnostic select.
6. Lamp test.
j. Color-coded system status LEDs to indicate:
1. Fire System Active.
2. System Control.
3. System in Use.
4. Speaker Zone Active.
5. Speaker Zone Fault.
6. OK to Page.
7. Microphone Trouble.
8. Message Active.
9. Remote Amplifier Fault.
10. Main Console Fault.
11. AC Power.
12. Ground Fault.
13. Charger Fault.
14. Battery Fault.
15. Data Bus Fault.
16. NAC Fault.
17. NAC Active.
18. System Trouble.
19. Audio Riser Fault.
k. One notification appliance circuit (NAC).
2. Secondary Power: Storage battery and battery charger capable of operating entire system for period of time specified by NFPA 72 plus 25 percent spare capacity.
3. Auxiliary Battery Cabinet: As required for the batteries installed within.
4. Audio Amplifier Modules: As required for speakers served.

2.04 INITIATING DEVICES
A. Smoke Detectors: Addressable, low-profile photoelectric smoke detector, unless indicated otherwise, with appropriate mounting base.
1. Provide relay base when smoke detector is used for door releasing service.
B. Duct Smoke Detectors:
1. General:
a. Provide for each HVAC unit rated equal to or greater than 2,000 cubic feet per minute.
b. Provide for all HVAC units serving the same room or area where the total aggregate capacity of the units is equal to or greater than 2,000 cubic feet per minute.
c. Provide for all HVAC units that share a common return air plenum where the total aggregate capacity of the units is equal to or greater than 2,000 cubic feet per minute.
d. Provide as required for control of each smoke damper.
2. Detector: Addressable photoelectric smoke detector suitable for duct air velocities from 0 to 4000 feet per minute (fpm) and with capabilities for remote testing unless indicated otherwise.
3. Housing: As required for the duct smoke detector.
4. Sampling Tube: As required for the duct.
5. Remote Test Stations: Keyed remote test station with green POWER and red ALARM status indicators unless indicated otherwise; provide when duct smoke detector is installed in a concealed location greater than 10 feet above finished floor or when duct smoke detector's status indicators are not readily visible.
6. Remote Alarm Annunciators: Remote alarm annunciator with piezo audible alarm signal, green POWER status indicator, and red ALARM status indicator unless indicated otherwise; provide for each duct smoke detector that is not connected to a fire alarm control unit.
C. Heat Detectors: Addressable, 135 degrees F (57 degrees C) fixed temperature heat detector, unless indicated otherwise, with appropriate mounting base.
1. Provide relay base when heat detector is used to activate a shunt trip.
D. Manual Pull Stations: Addressable, dual-action manual pull station unless indicated otherwise; semi-flush mounted in all finished areas and surface mounted with appropriate backbox in unfinished areas.

2.05 NOTIFICATION APPLIANCES
A. General:
1. All notification appliances shall be from the same manufacturer.
2. All notification appliances shall be semi-flush mounted in all finished areas; notification appliances are permitted to be surface mounted in unfinished areas.
3. All notification appliances installed within damp or wet locations shall be weatherproof.
4. All notification appliance housings shall be white unless indicated otherwise or unless the Authority Having Jurisdiction requires red housings.
a. Exterior notification appliances shall have red housings.
5. Provide strobe synchronization modules when more than one strobe is located within a viewing area.
B. Horns: Rated at 88 dBA at 16 volts, suitable for ceiling or wall-mounting, field-selectable horn tones, and field-selectable volume settings.
C. Strobes: Flash tube with clear lens and reflector, suitable for ceiling or wall-mounting, and field-selectable candela settings.
D. Combination Horn/Strobes: An integrated appliance consisting of a horn unit and strobe unit meeting the specified individual requirements of both horns and strobes.
E. Speakers: Frequency range from 400 Hz to 4.0 kHz, high-fidelity, high-volume, field-selectable speaker voltage, and field-selectable power settings.
F. Combination Speaker/Strobes: An integrated appliance consisting of a speaker unit and strobe unit meeting the specified individual requirements of both speakers and strobes.

2.06 AUXILIARY DEVICES
A. Addressable Monitor Modules: As required for a complete operational system.
B. Addressable Control Modules: As required for a complete operational system.
C. Addressable Relay Modules: As required for a complete operational system.
D. Door Holders: 24 volt coil and 40 pounds of holding force unless indicated otherwise; coordinate selection of door holders with architectural hardware requirements and verify required clearances, sizes and locations to operate properly with the doors and hardware specified.
E. Notification Appliance Circuit Power Supplies: As required for a complete operational system.
F. End-of-Line Resistors: As recommended by the manufacturer.
G. Wireguards: Provide for any wall-mounted notification appliances located in gymnasiums or where otherwise exposed to physical damage.

2.07 COMBINATION SMOKE/CARBON MONOXIDE ALARMS
A. Combination photoelectric smoke and carbon monoxide alarm, interconnectable, 120 VAC hardwired with battery backup unless indicated otherwise; for use within individual dwelling units only.

2.08 CONDUIT: See section 260534; painted red.
2.09 BOXES: See section 260537; painted red.
2.10 WIRE AND CABLE
A. All Wire and Cable:
1. Riser Cabling: Unshielded Type FPLR when installed in conduit and Type FPLP when not installed in conduit unless indicated otherwise or otherwise required; red jacket.
2. Horizontal Cabling: Unshielded Type FPL when installed in conduit and Type FPLP when not installed in conduit unless indicated otherwise or otherwise required; red jacket.
B. Initiating Device Circuits (IDC):
1. Number of Conductors: As recommended by the manufacturer.
2. Conductor Size: As recommended by the manufacturer but not smaller than 18 AWG.
C. Signaling Line Circuits (SLC):
1. Number of Conductors: As recommended by the manufacturer.
2. Conductor Size: As recommended by the manufacturer but not smaller than 18 AWG.
D. Notification Appliance Circuits (NAC):
1. Number of Conductors: As recommended by the manufacturer.
2. Conductor Size: As recommended by the manufacturer but not smaller than 14 AWG.

PART 3 EXECUTION
3.01 COORDINATION WITH OTHER TRADES
A. Coordinate all fire alarm work with all other trades including, but not limited to:
1. Connection of all fire sprinkler monitoring components including all flow switches, tamper switches, post indicator valves, corrosion monitoring probes, dry-type system compressors, and fire pumps with the Fire Sprinkler Contractor.
2. Connection of all individual HVAC units rated equal to or greater than 2,000 cubic feet per minute (CFM), locations of HVAC units serving the same room or area where the total aggregate capacity of the units is equal to or greater than 2,000 cubic feet per minute (CFM), locations of HVAC units sharing a common return air plenum where the total aggregate capacity of the units is equal to or greater than 2,000 cubic feet per minute (CFM), smoke dampers, smoke exhaust equipment, and Type 1 grease hood fire suppression systems with the Mechanical Contractor.
3. Connection of all elevator controllers and elevator recall systems with the Vertical Transportation Contractor.
4. Locations where boxes and/or conduit are to be roughed-in for initiating devices and/or notification appliances and locations where 120 volt power is required with the Electrical Contractor.
B. Change orders arising from a lack of coordination with the other trades will not be considered.

3.02 INSTALLATION
A. Install all components in accordance with all applicable codes including, NFPA 70, NFPA 72, and the applicable Fire and Building Codes.
B. Install all products in strict accordance with manufacturer's instructions.
C. Obtain Owner's approval of locations of all components prior to rough-in.
D. Install components at the following mounting heights:
1. Control Units: Top at 72 inches above finished floor.
2. Remote Annunciators: Top at 60 inches above finished floor.
3. Manual Pull Stations: Centerline at 46 inches above finished floor.
4. Audible Notification Appliances: Top at 90 inches above finished floor or 6 inches below finished ceiling, whichever is lower.
5. Visible Notification Appliances: Top at 96 inches above finished floor or 6 inches below finished ceiling, whichever is lower.
6. Combination Audible/Visual Notification Appliances: Top at 96 inches above finished floor or 6 inches below finished ceiling, whichever is lower.
E. Make conduit and wiring connections to all initiating devices, notification appliances, control units, fire sprinkler system components, HVAC system components, smoke control system components, vertical transportation components, grease hood fire suppression system components, monitor modules, control modules, relay modules, etc. for a complete fully functional system.
F. Install outlet boxes for door holders to withstand 80 pounds of pulling force.
G. Install control relays within 3 feet of the controlled equipment.
H. Install duct smoke detector remote test stations and/or remote alarm LED annunciators; coordinate locations with the Owner and the Authority Having Jurisdiction prior to rough-in.
I. Install end-of-line resistor in box with last device or separate box adjacent to last device in circuit.
J. Conceal all wiring, conduit, boxes, and supports where located within finished areas.
K. Install all concealed, inaccessible wiring, including wiring installed in walls, and all exposed wiring in conduit in accordance with NFPA 70.
1. Wiring may be installed without conduit where accessible and not subject to damage only when specifically permitted by the Authority Having Jurisdiction.
L. Plenum rated cable may be used only where concealed above accessible tile ceilings or accessible shafts.
M. Separate cables from any open conductors of Class 1 circuits and do not place in any conduit, junction box, or raceway containing Class 1 cables.
N. Provide the following circuit classes:
1. Initiating Device Circuits (IDC): Class B.
2. Signaling Line Circuits (SLC) Within Building: Class B.
3. Signaling Line Circuits (SLC) Between Buildings: Class A.
4. Notification Appliance Circuits (NAC): Class B.
5. Door Holders: Class D.
O. Provide a minimum of 25 percent spare capacity on all circuits.
P. Connect control unit to a separate dedicated branch circuit with a separate, red, dedicated circuit breaker with lock-on accessory and label circuit as FIRE ALARM.
Q. Connect any 120 volt exterior fire sprinkler alarm bells to the same circuit serving the control unit.
R. Install instruction cards and labels; provide legible, permanent labels for each control device, using identification used in operation and maintenance data.

3.03 FIRE SAFETY SYSTEMS INTERFACES
A. Provide the following fire safety system interfaces upon activation. Coordinate all components requiring interface, including exact locations, with the associated Contractor. Change orders arising from a lack of coordination with the other trades will not be considered.
1. General:
a. Manual Pull Stations: Transmit alarm signal to control unit.
b. Smoke Detectors: Transmit alarm signal to control unit.
c. Heat Detectors: Transmit alarm signal to control unit.
2. Fire Sprinkler Systems:
a. Flow Switches: Transmit alarm signal to control unit.
b. Tamper Switches: Transmit supervisory signal to control unit.
c. Post Indicator Valves: Transmit supervisory signal to control unit.
d. Corrosion Monitoring Probes: Transmit supervisory signal to control unit.
e. Pressure Monitoring Systems: Transmit supervisory signal to control unit.
f. Fire Pumps: Transmit supervisory signal to control unit per NFPA 20 and NFPA 72.
3. HVAC Systems:
a. Shut down supply fan on each individual unit rated equal to or greater than 2,000 cubic feet per minute.
b. Shut down all supply fans on all units that share a common return air plenum where the total aggregate capacity of the units is equal to or greater than 2,000 cubic feet per minute.
c. Shut down all supply fans on all units that serve a common room or area where the total aggregate capacity of the units is equal to or greater than 2,000 cubic feet per minute.
d. Shut down high volume low speed (HVLS) fans.
e. Close smoke dampers.
f. Transmit alarm or supervisory signal to control unit; coordinate required signal type with the Authority Having Jurisdiction.
4. Grease Hood Fire Suppression System:
a. Disconnect power to all appliances located under hood.
b. Close gas valve(s) serving appliances located under hood.
c. Shut down all supply air fan(s).
d. Start hood exhaust fan(s) if not already running.
e. Transmit alarm signal to control unit.
5. Smoke Exhaust:
a. Shut down all supply air fan(s).
b. Start smoke exhaust fan(s).
c. Transmit alarm signal to control unit.
6. Smoke Barrier Door Holders:
a. Release upon activation of smoke detectors on either side of door.
b. Release upon activation of manual pull station on the same floor.
c. Release upon activation of fire sprinkler flow switch.
7. Electromagnetic Locks on Egress Doors: Release upon any alarm signal.
8. Fire Alarm Wiring:
a. Open Circuit: Transmit trouble signal to control unit.
b. Single Ground: Transmit trouble signal to control unit.
c. Short Circuit: Transmit trouble signal to control unit.
9. Interlocking with Existing Fire Alarm Control Panels:
a. In buildings with an existing fire alarm control panel, interlock all new fire alarm panels with the existing main fire alarm control panel such that all alarm, supervisory, and trouble signals reported at any new fire alarm panels are transmitted to and annunciated at the main building fire alarm control panel.

3.04 SEQUENCE OF OPERATION
A. Alarm:
1. Visual and audible alarm at control unit.
2. Visual and audible alarm at remote annunciator.
3. Transmit alarm signal to central station.
4. Activate visual notification appliances.
5. Activate audible notification appliances.
6. Transmit signal to building mechanical systems to initiate supply air fan shut down.
7. Transmit signal to high volume low speed (HVLS) fans to initiate shut down.
8. Transmit signal to building mechanical systems to close smoke damper(s).
9. Transmit signal to building mechanical system to grease hood exhaust fan(s).
10. Transmit signal to building mechanical system to start smoke exhaust fan(s).
11. Transmit signal to elevator controllers to initiate elevator recall.
B. Supervisory:
1. Visual and audible alarm at control unit.
2. Visual and audible alarm at remote annunciator.
3. Transmit supervisory signal to central station.
C. Trouble:
1. Visual and audible alarm at control unit.
2. Visual and audible alarm at remote annunciator.
3. Transmit trouble signal to central station.
4. Manual acknowledge silences audible trouble alarm at control unit and remote annunciator but visual alarm remains displayed until trouble condition is cleared.

3.05 INSPECTION, TESTING, AND ADJUSTMENT
A. Complete NFPA 72 "RECORD OF COMPLETION" form.
B. Notify the Authority Having Jurisdiction and comply with their requirements for scheduling inspections and tests and for observation by their personnel.
C. Perform inspection and testing in accordance with NFPA 72 and requirements of the Authority Having Jurisdiction.
D. Document each inspection and test, correct any defective work, and retest until entire system complies with the requirements of NFPA 72, the Authority Having Jurisdiction, and the Contract Documents.

3.06 PERSONNEL INSTRUCTION
A. Provide hands-on instruction for the Owner's designated representative.
B. Provide the services of instructors, teaching aids, and copies of operation and maintenance data during instruction.

3.07 CLOSEOUT
A. Substantial Completion: Substantial Completion cannot be achieved until inspection and testing is successful, all aspects of operation have been demonstrated to Owner, final acceptance of the fire alarm system has been given by the Authority Having Jurisdiction, the occupancy permit has been issued, and the personnel instruction is complete.
B. Demonstration: Demonstrate proper operation of all functions to Owner. Demonstration may be combined with inspection and testing required by the Authority Having Jurisdiction.
C. Closeout Documentation and Materials:
1. Provide the following closeout documentation and materials to the Owner:
a. Manufacturer's cut sheets, owner's manual, manufacturer's published instructions, and troubleshooting guides covering all system equipment.
b. Detailed but easy to read explanation of procedures to be used by non-technical personnel in the event of system trouble, when routine testing is being conducted, and for fire drills.
c. Record drawings complying with NFPA 72-2013 section 7.5.5.
d. NFPA 72-2013 "RECORD OF COMPLETION" form.
e. NFPA 72-2013 "SYSTEM RECORD OF INSPECTION AND TESTING" form.
f. Preventive maintenance schedule.
g. Testing and inspection procedures and schedule.
2. All closeout documentation shall be neatly organized in a three-ring binder with labeled dividers separating sections.

3.08 MAINTENANCE CONTRACT
A. Provide, as an alternate to the base bid for later acceptance by the Owner, a proposal for a two-year maintenance contract that includes:
1. Services to perform routine inspection, testing, and preventive maintenance required by NFPA 72, including maintenance of fire safety interface and supervisory devices connected to fire alarm system, and repairs required.
2. Record keeping required by NFPA 72 and the Authority Having Jurisdiction.
3. Trouble call-back service upon notification by the Owner within two hours of notification.
a. Include allowance for call-back service during normal working hours at no extra cost to Owner.
b. Owner will pay for call-back service outside of normal working hours on an hourly basis, based on actual time spent at site and not including travel time.
c. Include hourly rate and definition of normal working hours in maintenance contract.
4. A complete description of proposed preventive maintenance, systematic examination, adjustment, cleaning, inspection, and testing, with a detailed schedule.
5. Maintenance of a log at each control unit, listing the date and time of each inspection and call-back visit, the condition of the system, nature of the trouble, correction performed, and parts replaced.
6. Providing an updated NFPA 72-2013 "SYSTEM RECORD OF INSPECTION AND TESTING" form to Owner's representative upon completion of site visit.
7. Include the total cost of contract.
B. Proposal shall be valid for a minimum of 30 days after date of Substantial Completion.

**END OF SECTION**

Bergmeyer
BOS
51 Sleeper St.
6th Floor
Boston, MA 02210
617.542.1025
LA
800 South Figueroa St.
Suite 1080
Los Angeles, CA 90017
212.337.1090
www.bergmeyer.com

CONSULTANTS:
Schnackel engineers
800-581-0963
www.schnackel.com
SE JOB#: 200383

SEAL/ SIGNATURE:
STATE OF MISSOURI
GREGORY ROY SCHNACKEL
NUMBER
E-026570
REGISTERED PROFESSIONAL ENGINEER
Date: 03/05/21
COA #: E-2009006642

| NO. | BY | DATE | DESCRIPTION |
|---|---|---|---|
| 1 | | 2021-03-09 | ADDENDUM #1 |
| | | 2021-01-11 | PERMIT/BID SET |
| | | 2020-12-21 | 75% SET |
| | | 2020-10-12 | DD SET |

SHAKE SHACK

SHAKE SHACK - LEE'S SUMMIT MO

LEE'S SUMMIT
MISSOURI
SHACK #1348

PERMIT/BID SET

FIRE PROTECTION SPECIFICATIONS

DRAWN BY: DAK
CHECKED BY: GRS
JOB NO: 20068.00

F591

| SHEET NUMBER | SHEET NAME |
|---|---|
| M001 | MECHANICAL ABBREVIATIONS AND SYMBOLS |
| M101 | MECHANICAL FLOOR PLAN |
| M102 | MECHANICAL REFRIGERANT PIPING LAYOUT PLAN |
| M150 | MECHANICAL ROOF PLAN |
| M501 | MECHANICAL DETAILS |
| M502 | MECHANICAL DETAILS |
| M590 | MECHANICAL SPECIFICATIONS |
| M591 | MECHANICAL SPECIFICATIONS |
| M601 | MECHANICAL SCHEDULE |
| M701 | HALTON DRAWINGS |
| M702 | HALTON DRAWINGS |
| M703 | HALTON DRAWINGS |
| M704 | HALTON DRAWINGS |
| M705 | HALTON DRAWINGS |

## CX SUBMITTAL MATRIX

GENERAL CONTRACTORS TO ALSO REVIEW ARCHITECTRUAL SPECIFICATIONS AS NOTED IN PLANS IN PLAN SECTION 700 OF THE ARCHITECTURAL PACKAGE FOR REQUIRED SUBMITTALS THAT MIGHT NOT BE LISTED BELOW.

| SUBMITTAL DECRIPTION | Required Review Time (Business Days) | Architect of Record | Shake Shack | Commissioning Agent | Physical Sample Required | Submittal for Record | Submittal for Record Only |
|---|---|---|---|---|---|---|---|
| Anchor Bolts Shops | 5 | X | | | | X | |
| ATAS–Detailed Shop DWGS(Submitted by Owner Vendor to Owner/AOR prior to const.) | 5 | X | | | | | X |
| Concrete Mix Design | 5 | X | | | | X | |
| Construction Prefunctional Checklists | 5 | X | | X | | | X |
| Decorative Metal Shop Drawings | 5 | X | | | | | |
| Diffusers, Grills & Registers | 5 | X | | | | X | |
| Doors, Frames & Hardware | 7 | X | | | | X | |
| Ductwork Layout (if there are signifcant changes in field) | 5 | X | | X | | X | |
| Electrical Distribution Equipment | 5 | X | | X | | | |
| Elevator & Vertical Transportation Shop Drawings | 5 | X | | | | | X |
| Epoxy Floor | 5 | X | | | | | X |
| Fire Alarm Shop Drawings & Device Cut Sheets | 5 | x | | X | | X | |
| Fire Sprinkler Shop Drawings, Hydraulic Calculations & Device Cut Sheets | 5 | x | | X | | | X |
| HVAC Equipment(if Carrier – Submitted by Owner Vendor to Owner/AOR prior to const.) | 5 | x | | X | | X | |
| Light Fixtures(Submitted by Owner Vendor to Owner/AOR prior to construction) | 5 | X | | X | | X | |
| MEP Tests, Start–Up, and Programming Reports | 5 | X | | X | | X | |
| Millwork – Material Submittals (if differs from spec) | 5 | X | X | | X | | |
| Millwork – Shop Drawings (custom items & design features only) | 5 | X | | | | | |
| Restroom Partitions | 5 | X | | | | X | |
| Plumbing Fixtures | 5 | X | | X | | X | |
| Railing Shop Drawings | 5 | X | | | | | X |
| Rebar | 5 | X | | | | X | |
| Stair Shop Drawings | 5 | X | | | | | X |
| Structural Steel Shop Drawings | 7 | X | | | | X | |
| Storefront – product data Submittal (if different from specified) | 5 | X | | | | | |
| Storefront – Shop Drawings | 5 | X | | | | | |
| Tile (if differs from spec) | 5 | X | | | | X | |
| Window Film | 5 | X | | | | | |

## SYMBOLS

HEATING–VENTILATING–AIR CONDITIONING

| SYMBOL | DESCRIPTION |
|---|---|
| T | THERMOSTAT |
| S | REMOTE SENSOR |
| | SUPPLY DIFFUSER |
| | RETURN OR EXHAUST GRILLE |
| | SUPPLY OR FRESH AIR DUCT (SA OR FA) |
| | RETURN OR EXHAUST AIR DUCT (RA OR EA ) |
| 10/6 | RECTANGULAR DUCT FIRST FIGURE IS SIDE SHOWN |
| SIZE 12"ø | ROUND DUCT |
| ELEV PLAN | VOLUME DAMPER (ELEV AND PLAN) |
| | TURNING VANES |
| CFM / SIZE | SUPPLY REGISTER OR GRILLE (R OR G) |
| CFM / SIZE | RETURN REGISTER OR GRILLE (R OR G) |
| CFM / SIZE | FRESH AIR INTAKE (FA) |
| | SQUARE CEILING DIFFUSER (SUPPLY) |
| D | CONDENSATE OR VACUUM PUMP DISCHARGE |
| G | GAS LINE |
| RL | REFRIGERANT LIQUID LINE |
| RS | REFRIGERANT SUCTION LINE |
| MD | MOTORIZED DAMPER |

## RESPONSIBILITY MATRIX

THIS SCHEDULE IS PROVIDED FOR QUICK REFERENCE ONLY.
THE GENERAL CONTRACTOR IS RESPONSIBLE FOR ALL WORK DESCRIBED IN THE CONSTRUCTION DOCUMENTS.
CONFLICTS BETWEEN THIS SCHEDULE AND THE REST OF THE CONTRACT DOCUMENTS SHALL BE BROUGHT TO THE ARCHITECT'S ATTENTION PRIOR TO BEGINNING WORK.

| DESCRIPTION | FURNISHED | | | INSTALLED | | | REMARKS |
|---|---|---|---|---|---|---|---|
| | GENERAL CONTRACTOR | OWNER | LANDLORD | GENERAL CONTRACTOR | OWNER | LANDLORD | |
| DIVISION 23: HEATING, VENTILATING, AND AIR CONDITIONING | | | | | | | |
| 23.1 HVAC DUCTWORK AND PIPING IDENTIFICATION | | | | | | | |
| 23.1.1 HVAC DUCTWORK SYSTEM IDENTIFICATION | X | | | X | | | |
| 23.1.2 PIPING SYSTEM IDENTIFICATION | X | | | X | | | |
| 23.1.3 UTILITY SHUT OFF IDENTIFICATION IN KITCHEN | X | | | X | | | |
| 23.1.4 VALVE TAGS AND CHART | X | | | X | | | |
| 23.1.5 HVAC DAMPER IDENTIFICATION | X | | | X | | | |
| 23.2 ROOF CURBS | | | | | | | |
| 23.2.1 EXHAUST FAN CURBS | X | | | X | | | GENERAL CONTRACTOR SCOPE OF WORK TO INCLUDE RIGGING, CURBS, AND ACCESSORIES |
| 23.2.2 ROOFTOP UNIT CURBS | X | | | X | | | GENERAL CONTRACTOR SCOPE OF WORK TO INCLUDE RIGGING, CURBS, AND ACCESSORIES |
| 23.2.3 CONDENSING UNIT CURBS | X | | | X | | | GENERAL CONTRACTOR SCOPE OF WORK TO INCLUDE RIGGING, CURBS, AND ACCESSORIES |
| 23.2.4 MAKE UP AIR UNIT CURBS | | X | | X | | | GENERAL CONTRACTOR SCOPE OF WORK TO INCLUDE RIGGING, CURBS, AND ACCESSORIES |
| 23.2.5 KITCHEN EXHAUST FAN CURBS | | X | | X | | | GENERAL CONTRACTOR SCOPE OF WORK TO INCLUDE RIGGING, CURBS, AND ACCESSORIES |
| 23.3 HVAC DUCTWORK SYSTEM COMPONENTS | | | | | | | |
| 23.3.1 HVAC DUCTWORK | X | | | X | | | |
| 23.3.2 INSULATION AND FIRE WRAP | X | | | X | | | GENERAL CONTACTOR SCOPE OF WORK TO INCLUDE TENANT FIT OUT FROM LANDLORD POINT OF CONNECTION |
| 23.3.3 DAMPERS | X | | | X | | | |
| 23.3.4 SMOKE DETECTORS | X | | | X | | | |
| 23.3.5 SUPPLY, RETURN, AND EXHAUST GRILLS AND REGISTERS | X | | | X | | | |
| 23.4 MECHANICAL PIPING SYSTEM COMPONENTS | | | | | | | |
| 23.4.1 WALK-IN COOLER AND FREEZER REFRIGERATION | | X | | | X | | WALK-IN COOLER AND FREEZER SUPPLIED BY VENDOR NO. 27 GENERAL CONTRACTOR SCOPE OF WORK TO INCLUDE PIPING INSTALLATION AND FINAL CONNECTION |
| 23.4.2 REFRIGERATION FOR OTHER HVAC EQUIPMENT | X | | | X | | | |
| 23.4.3 CHILLED WATER | X | | | X | | | |
| 23.4.4 CONDENSER WATER | X | | | X | | | |
| 23.4.5 HEATING HOT WATER | X | | | X | | | |
| 23.4.6 VALVES AND ACCESSORIES (E.G. AIR VENTS) | X | | | X | | | |
| 23.5 HVAC EQUIPMENT | | | | | | | GENERAL CONTRACTOR SCOPE OF WORK TO INCLUDE RIGGING FOR ALL ROOFTOP EQUIPMENT |
| 23.5.1 SUPPLY FAN | X | | | X | | | |
| 23.5.2 TOILET EXHAUST FAN | X | | | X | | | |
| 23.5.3 KITCHEN EXHAUST FAN | | X | | X | | | SUPPLIED BY VENDOR NO. 26 |
| 23.5.4 DUCTED AND NON-DUCTED HEATING AND COOLING UNITS | X | | | X | | | |
| 23.5.5 MAKE UP AIR UNITS | | X | | X | | | SUPPLIED BY VENDOR NO. 26 |
| 23.5.6 ELECTRIC PATIO HEATERS | X | | | X | | | |
| 23.5.7 CONDENSING UNITS | X | | | X | | | |
| 23.5.8 RGF PHI SYSTEM | X | | | X | | | GENERAL CONTRACTOR TO PURCHASE FROM VENDOR NO. 12 VENDOR SUBSTITUTION IS NOT PERMITTED |
| 23.6 KITCHEN EXHAUST WITH FIRE SUPPRESSION SYSTEM | | | | | | | |
| 23.6.1 HOOD CONTROL PANEL | | X | | X | | | SUPPLIED BY VENDOR NO. 26 |
| 23.6.2 KITCHEN EXHAUST HOOD | | X | | X | | | SUPPLIED BY VENDOR NO. 26 |
| 23.6.3 STRUCTURAL SUPPORT | X | | | X | | | |
| 23.6.4 ELECTRICAL AND CONTROL WIRING | X | | | X | | | |
| 23.6.5 ANSUL SYSTEM | | X | | X | | | SUPPLIED BY VENDOR NO. 26 GENERAL CONTRACTOR TO COORDINATE AND FACILITATE SYSTEM SIGN-OFF |
| 23.6.6 ANSUAL WIRING AND UTILITIES CONNECTION | X | | | X | | | |
| 23.6.7 ANSUAL GAS VALVE | | X | | X | | | SUPPLIED BY VENDOR NO. 26 |
| 23.7 COMMISSIONING ACTIVITIES | | | | | | | |
| 23.7.1 GREASE EXHAUST WATER LEAKAGE TEST | X | | | X | | | GENERAL CONTRACTOR TO PURCHASE FROM VENDOR NO. 10 VENDOR SUBSTITUTION IS NOT PERMITTED |
| 23.7.2 TESTING AIR BALANCE (TAB) REPORT | X | | | X | | | GENERAL CONTRACTOR TO PURCHASE FROM VENDOR NO. 12 VENDOR SUBSTITUTION IS NOT PERMITTED |

## CX MATRIX

| Division | System / Equipment | Flush & Clean / Sanitize | Pneumatic Pressure Test | Hydrostatic Pressure Test | Duck Leak Test | Insulation Resistance (Megger) Test | Current Testing | Startup | Contractor Prefunctional Checklists | Functional Performance Test (Validation) |
|---|---|---|---|---|---|---|---|---|---|---|
| 23 | Heating Hot and Chilled Water Piping | X | | X | | | | | X | |
| 23 | HVAC Duct | | | | X | | | | X | |
| 23 | Exhaust Fans | | | | | | | X | X | X |
| 23 | Indoor and Outdoor Air Units | | | | | | | X | X | X |
| 23 | Dampers | | | | | | | X | X | X |

## CxA SCOPE OF WORK

Division 23 - Mechanical Commissioning Requirements

Scope of Work

- Verify mechanical systems, subsystems, equipment, instrumentation, and control systems have been completed and calibrated according to the Contract Documents and approved submittals.
- Validate the system is operable by setting the mechanical systems into operating mode to be tested according to approved test procedures (for example; normal shutdown, normal auto position, normal manual position, alarm conditions, etc.).

Prefunctional Construction Checklists

- Heating hot water and chilled water piping and fittings.
- Refrigerant piping and fittings.
- Condensate piping and fittings.
- Supply, return, and exhaust duct and fittings.
- Fans and motors.
- Indoor air units with and without coils, dampers, and filters.
- Outdoor air units with and without coils, dampers, and filters.
- HVAC control system equipment.
- Temperature sensors.
- Pumps, motors, accessories, and controls.
- Backflow preventers.
- Meters and gages.
- Valves.

RELEASE FOR CONSTRUCTION
AS NOTED ON PLANS REVIEW
DEVELOPMENT SERVICES
LEE'S SUMMIT, MISSOURI
03/10/2021

Bergmeyer
BOS - 51 Sleeper St. 6th Floor Boston, MA 02210 617.542.1025
LA - 800 South Figueroa St. Suite 1080 Los Angeles, CA 90017 212.337.1090
www.bergmeyer.com

CONSULTANTS:
Schnackel engineers
800-581-0963
www.schnackel.com
SE JOB#: 200383

SEAL/ SIGNATURE:
STATE OF MISSOURI
GREGORY ROY SCHNACKEL
NUMBER E-026570
REGISTERED PROFESSIONAL ENGINEER
Date: 03/05/21
COA #: E-2009006642

| NO. | BY | DATE | DESCRIPTION |
|---|---|---|---|
| 1 | | 2021-03-09 | ADDENDUM #1 |
| | | 2021-01-11 | PERMIT/BID SET |
| | | 2020-12-21 | 75% SET |
| | | 2020-10-12 | DD SET |

SHAKE SHACK

SHAKE SHACK - LEE'S SUMMIT MO

LEE'S SUMMIT
MISSOURI
SHACK #1348

PERMIT/BID SET

MECHANICAL ABBREVIATIONS & SYMBOLS

| | |
|---|---|
| DRAWN BY: | RAS |
| CHECKED BY: | GRS |
| JOB NO: | 20068.00 |

M001

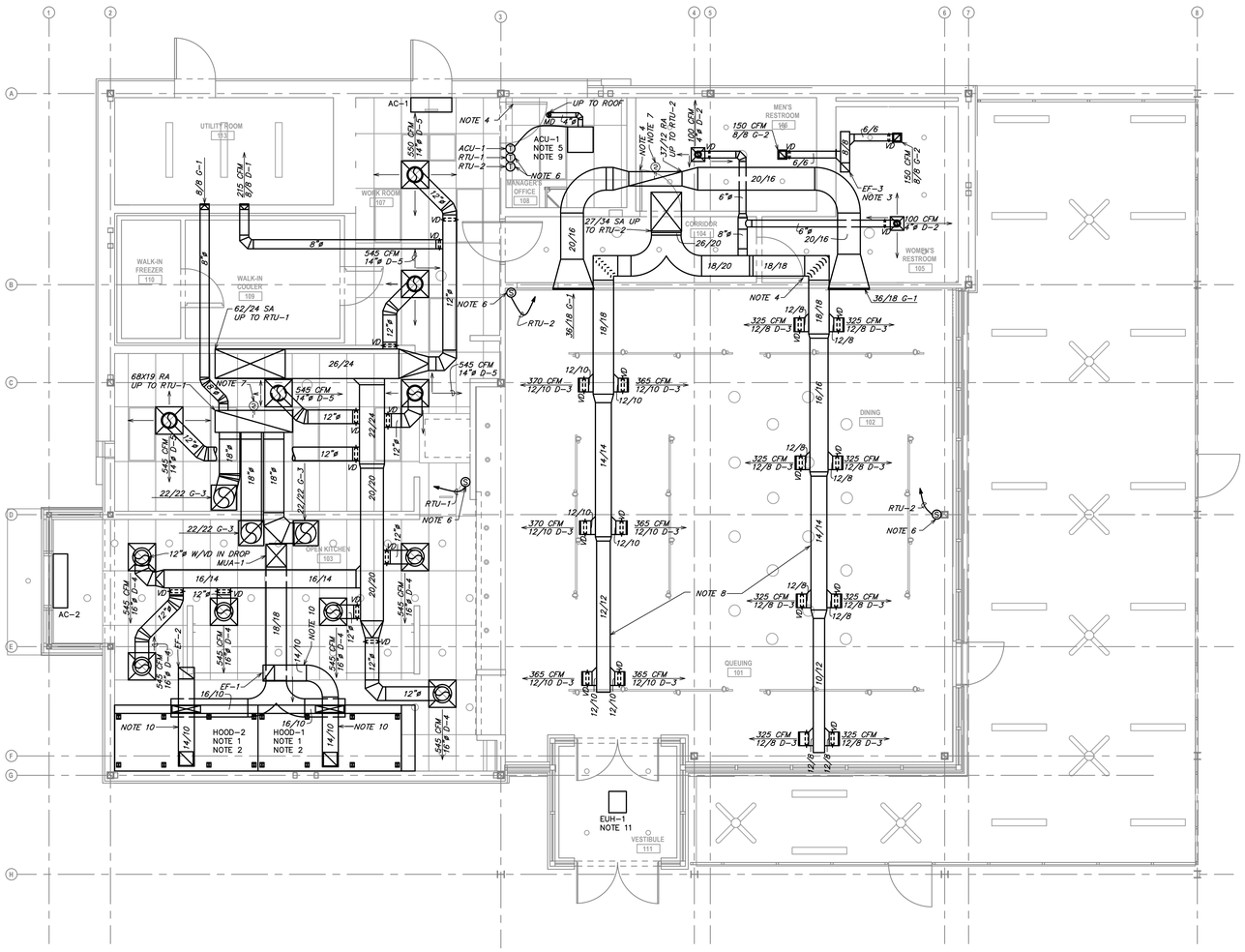


1 MECHANICAL FLOOR PLAN

SCALE: 1/4" = 1'-0"

GENERAL NOTES:

A. EXISTING CONDITIONS ARE BASED ON RECORD DRAWINGS PROVIDED BY THE OWNER. CONTRACTOR SHALL ADJUST TO ACTUAL FIELD CONDITIONS AT NO ADDITIONAL EXPENSE TO THE PROJECT.
B. CONTRACTOR SHALL BE RESPONSIBLE FOR FIELD VERIFICATION OF ALL EXISTING CONDITIONS PRIOR TO SUBMITTING THE BID. NO ADDITIONAL COMPENSATION WILL BE PROVIDED FOR ANY EXTRAS DUE TO THE CONTRACTOR'S FAILURE TO VISIT THE PROJECT SITE PRIOR TO SUBMITTING THE BID. ANY DISCREPANCIES SHALL BE IMMEDIATELY REPORTED TO THE ENGINEER FOR RESOLUTION.
C. ALL CONTRACTORS SHALL REVIEW A COMPLETE SET OF CONSTRUCTION DOCUMENTS.
D. CONTRACTORS SHALL FAMILIARIZE THEMSELVES WITH DEMOLITION WORK PRIOR TO BIDDING AND START OF WORK. CONTRACTOR IS RESPONSIBLE TO DEMOLISH ALL EXISTING AS REQUIRED FOR INSTALLATION/CONSTRUCTION OF NEW WORK.
E. ALL WORK SHALL BE COMPLETED IN ACCORDANCE WITH ALL APPLICABLE GOVERNMENT AND LOCAL CODES.
F. MECHANICAL CONTRACTOR SHALL FIELD COORDINATE WITH ELECTRICAL CONTRACTOR FOR ALL POWER REQUIREMENTS.
G. ALL CONTRACTORS SHALL REVIEW A COMPLETE SET OF CONSTRUCTION DOCUMENTS AND COOPERATE WITH THE OTHER TRADES SO THAT THE INSTALLATION OF ALL EQUIPMENT MAY BE PROPERLY COORDINATED.
H. ALL EQUIPMENT FURNISHED SHALL FIT THE SPACE AVAILABLE WITH CONNECTIONS IN THE REQUIRED LOCATIONS AND WITH ADEQUATE SPACE FOR OPERATING AND SERVICING. THE DRAWINGS ARE GENERALLY DIAGRAMMATIC AND INDICATE THE INTENT OF THE INSTALLATION WHILE THE SPECIFICATIONS AND EQUIPMENT LIST DENOTE THE TYPE AND QUALITY OF MATERIAL AND WORKMANSHIP TO BE USED. THE DRAWINGS SHALL NOT BE SCALED FOR EXACT MEASUREMENTS. WHERE A CONFLICT EXISTS BETWEEN THE DRAWINGS AND THE SPECIFICATIONS, THE HIGHER AND/OR MORE COSTLY STANDARD WILL APPLY. THE CONTRACTOR SHALL PROMPTLY NOTIFY THE ENGINEER WHOSE DECISION SHALL BE FINAL. NO ALLOWANCE WILL BE MADE SUBSEQUENTLY IN THIS REGARD ON BEHALF OF THE CONTRACTOR AFTER AWARD OF THE CONTRACT.
I. COORDINATE DUCT ROUTING AND HEIGHTS WITH GENERAL CONTRACTOR. VERIFY ALL CLEARANCES BEFORE STARTING WORK.
J. THE CONTRACTOR SHALL INSTALL ALL PIPING, DUCTWORK AND EQUIPMENT AS REQUIRED TO CONFORM TO THE STRUCTURE, AVOID OBSTRUCTIONS, PRESERVE CEILING HEIGHTS AND HEADROOM AND MAKE ALL EQUIPMENT REQUIRING MAINTENANCE OR REPAIR ACCESSIBLE.
K. ALL DUCT CONNECTIONS TO HVAC EQUIPMENT MUST BE MADE WITH FLEXIBLE CONNECTORS.
L. DO NOT ATTACH ANYTHING TO DECK ABOVE. ATTACH TO STRUCTURE (i.e. BEAMS, JOISTS) ONLY. DUCT HANGERS SHALL BE INSTALLED IN ACCORDANCE WITH LOCAL CODE. ALL CONNECTIONS TO JOISTS SHALL BE MADE AT THE TOP CORD.
M. ALL DUCT DIMENSIONS INDICATED ARE CLEAR INSIDE DIMENSIONS. ALL SUPPLY AND UNTEMPERED OUTDOOR AIR DUCTWORK SHALL BE LINED WITH 1" ACOUSTICAL DUCT LINER OR WRAPPED WITH 1-1/2" THICK FIRE RETARDANT FIBERGLASS WITH A REINFORCED ALUMINUM FOIL JACKET AND SHALL BE APPROVED FOR USE BY SMACNA AND NAIMA. RETURN AIR TRANSFER DUCTS AND RETURN DUCTWORK WITHIN 10 FEET OF THE UNIT FAN SHALL BE LINED WITH 1" ACOUSTICAL DUCT LINER.
N. ALL SUPPLY AND UNTEMPERED OUTDOOR AIR DUCTWORK VISIBLE TO THE PUBLIC SHALL BE INTERNALLY LINED AND PAINTED TO MATCH THE SURROUNDING AREA. DUCT WRAP INSULATION IS NOT PERMITTED IN THESE AREAS.
O. EXPOSED SPIRAL DUCT TO BE GALVANIZED FINISH, FREE FROM SCRATCHES, DENTS OR BLEMISHES AND PAINTED TO MATCH THE SURROUNDING AREA. DUCT SHALL BE INTERNALLY LINED AND SEALED WITH DUCT SEALER COMPLETELY CONCEALED WITHIN THE DUCT JOINT. NO EXPOSED SEALER OR TAPE WILL BE ACCEPTED.
P. ALL EXPOSED DUCTWORK SHALL BE INSTALLED TIGHT TO THE BOTTOM OF THE STRUCTURE, THRU JOIST SPACE.
Q. PROVIDE REMOTE VOLUME DAMPER CONTROL MANUFACTURED BY YOUNG REGULATOR OR UNITED ENERTECH FOR DAMPERS LOCATED ABOVE INACCESSIBLE CEILINGS. LOCATE CONTROLLER ABOVE ACCESSIBLE CEILING LOCATION.
R. REFRIGERANT PIPING SHALL BE SIZED PER MANUFACTURER'S RECOMMENDATIONS. PROVIDE ALL ACCESSORIES AS REQUIRED BY MANUFACTURER FOR COMPLETE WORKING SYSTEM, INCLUDING ANY ACCESSORIES ASSOCIATED WITH LONG LENGTH APPLICATIONS WHERE APPLICABLE.
S. TENANT'S CONTRACTOR SHALL BE RESPONSIBLE FOR THE FIELD VERIFICATION OF ALL UTILITY RUNS AND/OR OTHER IMPROVEMENTS LOCATED ON THE PREMISES PRIOR TO BIDDING. TENANT'S CONTRACTOR SHALL ALSO BE RESPONSIBLE FOR ALL COSTS RELATING TO THE RELOCATION OF, DAMAGE TO, REPAIR OF ANY EXISTING UTILITY RUNS AND/OR IMPROVEMENTS WHICH ARE DAMAGED AS A RESULT OF TENANT'S WORK IN OR AROUND THE PREMISES.
T. ALL ROOFING WORK SHALL BE PERFORMED BY LANDLORD'S APPROVED ROOFING CONTRACTOR AT TENANT'S EXPENSE, IF REQUIRED IN LEASE OR TENANT CRITERIA MANUAL.
U. ALL GREASE EXHAUST DUCTWORK SHALL BE PROVIDED WITH 3" FOIL FACED THERMAL-CERAMIC INSULATION FOR GREASE DUCTS. INSULATION SHALL MEET NFPA 96 AND ASTM E 2336 REQUIREMENTS.
V. GREASE DUCT LEAKAGE TESTING MUST BE PERFORMED PRIOR TO CONCEALMENT OF THE DUCTWORK.
W. MECHANICAL CONTRACTOR SHALL PROVIDE TENANT WITH A WRITTEN ONE (1) YEAR MANUFACTURER'S WARRANTY ON ALL HVAC EQUIPMENT PROVIDED AND / OR INSTALLED. THE WARRANTY SHALL INCLUDE ALL LABOR, MATERIALS AND THREE (3) ROUTINE SERVICES INCLUDING FILTER CHANGES DURING A ONE (1) YEAR PERIOD.
X. AT THE COMPLETION OF CONSTRUCTION AN NEBB, AABC OR TABB CERTIFIED AIR BALANCE REPORT SHALL BE SUBMITTED TO THE ENGINEER AND LANDLORD. THE BALANCING SHALL BE COMPLETED BY NATIONAL TAB. CONTACT WILL TURNBOURH AT WILL@NATIONALTAB.COM OR 314-954-6244.

HVAC NOTES:

1. NEW HALTON GREASE EXHAUST HOOD TO BE FURNISHED BY OWNER FOR INSTALLATION BY THE MECHANICAL CONTRACTOR. SEE HALTON SHEETS M701 THROUGH M705 FOR ADDITIONAL INFORMATION. BALANCE HOOD MAKE-UP AIR AND EXHAUST COLLARS AS NOTED ON THE HOOD SCHEDULE. PROVIDE FULL SIZE TRANSITION MAKE-UP AIR DUCT FROM COLLAR TO MAKE-UP AIR MAIN DUCT AS INDICATED ON PLANS.
2. TRANSITION FROM HOOD EXHAUST COLLAR AS INDICATED ON PLANS AND EXTEND 12/12 KITCHEN HOOD GREASE EXHAUST DUCTWORK UP TO GREASE EXHAUST FAN ON ROOF. SEE SHEET M150 FOR CONTINUATION. GREASE DUCT SHALL BE WRAPPED WITH TWO (2) LAYERS OF THERMAL CERAMICS FAST WRAP XL, 1 1/2" THICK WITH 3" PERIMETER AND LONGITUDINAL OVERLAPS OR EQUIVALENT U.L. LISTED GREASE DUCT WRAP FOR ZERO CLEARANCE TO COMBUSTIBLES. REFER TO DETAIL ON SHEET M501 FOR ADDITIONAL INFORMATION.
3. PROVIDE 8/8 EXHAUST AIR DUCT UP TO EF-3 ON ROOF.
4. CONTRACTOR SHALL UNDERCUT DOOR 3/4".
5. PROVIDE REFRIGERANT LINES FROM ASHP-1 ON ROOF TO ACU-1 IN ROOM 108. LINES SHALL BE SIZED ACCORDING TO MANUFACTURER'S SPECIFICATIONS. PROVIDE ALL ACCESSORIES AS REQUIRED BY MANUFACTURER FOR COMPLETE WORKING SYSTEM, INCLUDING ANY ACCESSORIES ASSOCIATED WITH LONG LENGTH APPLICATIONS WHERE APPLICABLE.
6. PROVIDE NEW FULLY DIGITAL 7 DAY PROGRAMMABLE TYPE THERMOSTAT WITH REMOTE SENSING CAPABILITIES, AUTO CHANGE OVER AND AUTO SET BACK. MOUNT THERMOSTAT AT 48" ABOVE FINISHED FLOOR. THERMOSTATS SERVING THE SAME TEMPERATURE ZONE SHALL BE INTERLOCKED TO PREVENT SIMULTANEOUS HEATING AND COOLING. PROVIDE REMOTE TEMPERATURE SENSORS AS INDICATED ON PLAN. COORDINATE LOCATION WITH WALL GRAPHICS LAYOUT.
7. DUCT SMOKE DETECTOR ON RETURN SIDE DUCT AND SHUTDOWN RELAY SHALL BE FURNISHED BY THE ELECTRICAL CONTRACTOR FOR INSTALLATION BY THE MECHANICAL CONTRACTOR. ALL WIRING SHALL BE BY THE ELECTRICAL CONTRACTOR.
8. ROUTE EXPOSED SUPPLY DUCT CENTER AT 12'-0" ABOVE FINISHED FLOOR. COORDINATE ROUTING AND MOUNTING HEIGHT WITH LIGHTING FIXTURES. TYPICAL OF EXPOSED DUCTWORK.
9. PROVIDE NEW ACU AS NOTED ON PLANS AND AS SCHEDULED ON SHEET M601.
10. PROVIDE CLEANOUTS ON GREASE EXHAUST DUCTWORK AS REQUIRED BY CODE. REFERENCE SHEET M501, DETAIL 5, FOR ADDITIONAL INFORMATION.
11. ELECTRIC UNIT HEATERS ARE FURNISHED AND INSTALLED BY THE ELECTRICAL CONTRACTOR. REFERENCE ELECTRICAL PLANS FOR ADDITIONAL INFORMATION.

RELEASE FOR CONSTRUCTION
AS NOTED ON PLANS REVIEW
DEVELOPMENT SERVICES
LEE'S SUMMIT, MISSOURI
03/10/2021

Bergmeyer
LA - 800 South Figueroa St. #1100 Los Angeles, CA 90017 212.337.1090
BOS - 51 Sleeper St. 4th Floor Boston, MA 02210 617.542.1025
www.bergmeyer.com

CONSULTANTS:
Schnackel engineers
800-581-0963
www.schnackel.com
SE JOB# 200363

SEAL/ SIGNATURE:
STATE OF MISSOURI
GREGORY ROY SCHNACKEL
NUMBER E-28570
Date: 03/05/21
COA # E-2009006642

| NO. | BY | DATE | DESCRIPTION |
|---|---|---|---|
| 1 | | 2021-03-09 | ADDENDUM #1 |
| | | 2021-01-11 | PERMIT/BID SET |
| | | 2020-12-21 | 75% SET |
| | | 2020-10-12 | DD SET |

SHAKE SHACK

SHAKE SHACK - LEE'S SUMMIT MO

LEE'S SUMMIT
MISSOURI
SHACK #1348

PERMIT/BID SET

MECHANICAL FLOOR PLAN

| | |
|---|---|
| DRAWN BY: | RAS |
| CHECKED BY: | GRS |
| JOB NO: | 20068.00 |

M101

RELEASE FOR CONSTRUCTION
AS NOTED ON PLANS REVIEW
DEVELOPMENT SERVICES
LEE'S SUMMIT, MISSOURI
03/10/2021

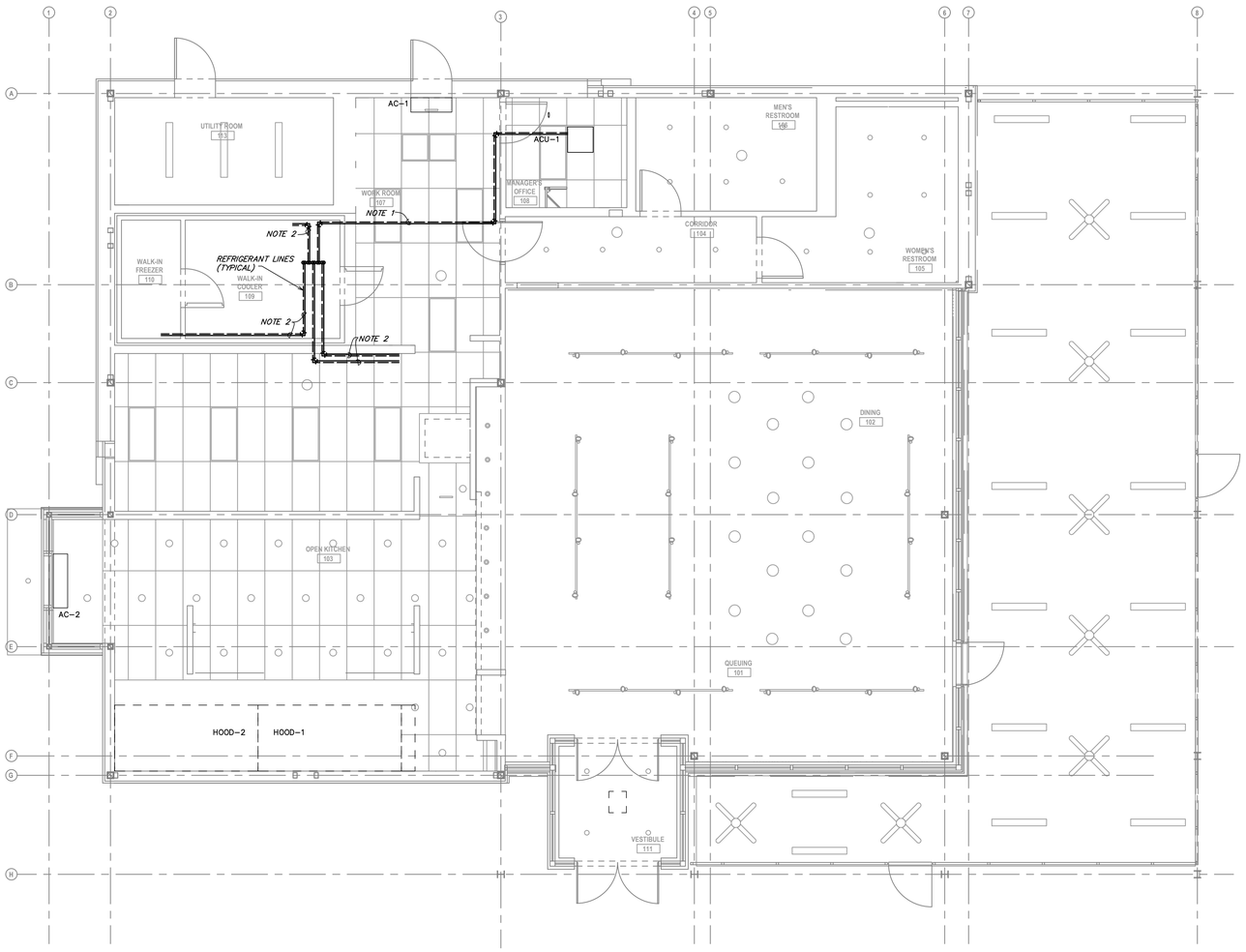


1 MECHANICAL REFRIGERANT PIPING LAYOUT PLAN
SCALE: 1/4" = 1'-0"

**GENERAL NOTES:**

A. EXISTING CONDITIONS ARE BASED ON RECORD DRAWINGS PROVIDED BY THE OWNER. CONTRACTOR SHALL ADJUST TO ACTUAL FIELD CONDITIONS AT NO ADDITIONAL EXPENSE TO THE PROJECT.
B. CONTRACTOR SHALL BE RESPONSIBLE FOR FIELD VERIFICATION OF ALL EXISTING CONDITIONS PRIOR TO SUBMITTING THE BID. NO ADDITIONAL COMPENSATION WILL BE PROVIDED FOR ANY EXTRAS DUE TO THE CONTRACTOR'S FAILURE TO VISIT THE PROJECT SITE PRIOR TO SUBMITTING THE BID. ANY DISCREPANCIES SHALL BE IMMEDIATELY REPORTED TO THE ENGINEER FOR RESOLUTION.
C. ALL CONTRACTORS SHALL REVIEW A COMPLETE SET OF CONSTRUCTION DOCUMENTS.
D. CONTRACTORS SHALL FAMILIARIZE THEMSELVES WITH DEMOLITION WORK PRIOR TO BIDDING AND START OF WORK. CONTRACTOR IS RESPONSIBLE TO DEMOLISH ALL EXISTING AS REQUIRED FOR INSTALLATION/CONSTRUCTION OF NEW WORK.
E. ALL WORK SHALL BE COMPLETED IN ACCORDANCE WITH ALL APPLICABLE GOVERNMENT AND LOCAL CODES.
F. MECHANICAL CONTRACTOR SHALL FIELD COORDINATE WITH ELECTRICAL CONTRACTOR FOR ALL POWER REQUIREMENTS.
G. ALL CONTRACTORS SHALL REVIEW A COMPLETE SET OF CONSTRUCTION DOCUMENTS AND COOPERATE WITH THE OTHER TRADES SO THAT THE INSTALLATION OF ALL EQUIPMENT MAY BE PROPERLY COORDINATED.
H. ALL EQUIPMENT FURNISHED SHALL FIT THE SPACE AVAILABLE WITH CONNECTIONS IN THE REQUIRED LOCATIONS AND WITH ADEQUATE SPACE FOR OPERATING AND SERVICING. THE DRAWINGS ARE GENERALLY DIAGRAMMATIC AND INDICATE THE INTENT OF THE INSTALLATION WHILE THE SPECIFICATIONS AND EQUIPMENT LIST DENOTE THE TYPE AND QUALITY OF MATERIAL AND WORKMANSHIP TO BE USED. THE DRAWINGS SHALL NOT BE SCALED FOR EXACT MEASUREMENTS. WHERE A CONFLICT EXISTS BETWEEN THE DRAWINGS AND THE SPECIFICATIONS, THE HIGHER AND/OR MORE COSTLY STANDARD WILL APPLY. THE CONTRACTOR SHALL PROMPTLY NOTIFY THE ENGINEER WHOSE DECISION SHALL BE FINAL. NO ALLOWANCE WILL BE MADE SUBSEQUENTLY IN THIS REGARD ON BEHALF OF THE CONTRACTOR AFTER AWARD OF THE CONTRACT.
I. COORDINATE DUCT ROUTING AND HEIGHTS WITH GENERAL CONTRACTOR. VERIFY ALL CLEARANCES BEFORE STARTING WORK.
J. THE CONTRACTOR SHALL INSTALL ALL PIPING, DUCTWORK AND EQUIPMENT AS REQUIRED TO CONFORM TO THE STRUCTURE, AVOID OBSTRUCTIONS, PRESERVE CEILING HEIGHTS AND HEADROOM AND MAKE ALL EQUIPMENT REQUIRING MAINTENANCE OR REPAIR ACCESSIBLE.
K. ALL DUCT CONNECTIONS TO HVAC EQUIPMENT MUST BE MADE WITH FLEXIBLE CONNECTORS.
L. DO NOT ATTACH ANYTHING TO DECK ABOVE. ATTACH TO STRUCTURE (i.e. BEAMS, JOISTS) ONLY. DUCT HANGERS SHALL BE INSTALLED IN ACCORDANCE WITH LOCAL CODE. ALL CONNECTIONS TO JOISTS SHALL BE MADE AT THE TOP CORD.
M. ALL DUCT DIMENSIONS INDICATED ARE CLEAR INSIDE DIMENSIONS. ALL SUPPLY AND UNTEMPERED OUTDOOR AIR DUCTWORK SHALL BE LINED WITH 1" ACOUSTICAL DUCT LINER OR WRAPPED WITH 1-1/2" THICK FIRE RETARDANT FIBERGLASS WITH A REINFORCED ALUMINUM FOIL JACKET AND SHALL BE APPROVED FOR USE BY SMACNA AND NAIMA. RETURN AIR TRANSFER DUCTS AND RETURN DUCTWORK WITHIN 10 FEET OF THE UNIT FAN SHALL BE LINED WITH 1" ACOUSTICAL DUCT LINER.
N. ALL SUPPLY AND UNTEMPERED OUTDOOR AIR DUCTWORK VISIBLE TO THE PUBLIC SHALL BE INTERNALLY LINED AND PAINTED TO MATCH THE SURROUNDING AREA. DUCT WRAP INSULATION IS NOT PERMITTED IN THESE AREAS.
O. EXPOSED SPIRAL DUCT TO BE GALVANIZED FINISH, FREE FROM SCRATCHES, DENTS OR BLEMISHES AND PAINTED TO MATCH THE SURROUNDING AREA. DUCT SHALL BE INTERNALLY LINED AND SEALED WITH DUCT SEALER COMPLETELY CONCEALED WITHIN THE DUCT JOINT. NO EXPOSED SEALER OR TAPE WILL BE ACCEPTED.
P. ALL EXPOSED DUCTWORK SHALL BE INSTALLED TIGHT TO THE BOTTOM OF THE STRUCTURE, THRU JOIST SPACE.
Q. PROVIDE REMOTE VOLUME DAMPER CONTROL MANUFACTURED BY YOUNG REGULATOR OR UNITED ENERTECH FOR DAMPERS LOCATED ABOVE INACCESSIBLE CEILINGS. LOCATE CONTROLLER ABOVE ACCESSIBLE CEILING LOCATION.
R. REFRIGERANT PIPING SHALL BE SIZED PER MANUFACTURER'S RECOMMENDATIONS. PROVIDE ALL ACCESSORIES AS REQUIRED BY MANUFACTURER FOR COMPLETE WORKING SYSTEM, INCLUDING ANY ACCESSORIES ASSOCIATED WITH LONG LENGTH APPLICATIONS WHERE APPLICABLE.
S. TENANT'S CONTRACTOR SHALL BE RESPONSIBLE FOR THE FIELD VERIFICATION OF ALL UTILITY RUNS AND/OR OTHER IMPROVEMENTS LOCATED ON THE PREMISES PRIOR TO BIDDING. TENANT'S CONTRACTOR SHALL ALSO BE RESPONSIBLE FOR ALL COSTS RELATING TO THE RELOCATION OF, DAMAGE TO, REPAIR OF ANY EXISTING UTILITY RUNS AND/OR IMPROVEMENTS WHICH ARE DAMAGED AS A RESULT OF TENANT'S WORK IN OR AROUND THE PREMISES.
T. ALL ROOFING WORK SHALL BE PERFORMED BY LANDLORD'S APPROVED ROOFING CONTRACTOR AT TENANT'S EXPENSE, IF REQUIRED IN LEASE OR TENANT CRITERIA MANUAL.
U. ALL GREASE EXHAUST DUCTWORK SHALL BE PROVIDED WITH 3" FOIL FACED THERMAL-CERAMIC INSULATION FOR GREASE DUCTS. INSULATION SHALL MEET NFPA 96 AND ASTM E 2336 REQUIREMENTS.
V. GREASE DUCT LEAKAGE TESTING MUST BE PERFORMED PRIOR TO CONCEALMENT OF THE DUCTWORK.
W. MECHANICAL CONTRACTOR SHALL PROVIDE TENANT WITH A WRITTEN ONE (1) YEAR MANUFACTURER'S WARRANTY ON ALL HVAC EQUIPMENT PROVIDED AND / OR INSTALLED. THE WARRANTY SHALL INCLUDE ALL LABOR, MATERIALS AND THREE (3) ROUTINE SERVICES INCLUDING FILTER CHANGES DURING A ONE (1) YEAR PERIOD.
X. AT THE COMPLETION OF CONSTRUCTION AN NEBB, AABC OR TABB CERTIFIED AIR BALANCE REPORT SHALL BE SUBMITTED TO THE ENGINEER AND LANDLORD. THE BALANCING SHALL BE COMPLETED BY NATIONAL TAB. CONTACT WILL TURNBOURH AT WILL@NATIONALTAB.COM OR 314-954-6244.

**HVAC NOTES**

1. PROVIDE REFRIGERANT LINES FROM ASHP-1 ON ROOF TO ACU-1 ABOVE KITCHEN OFFCIE SPACE AS NOTED ON PLANS. LINES SHALL BE SIZED ACCORDING TO MANUFACTURER'S SPECIFICATIONS. PROVIDE ALL ACCESSORIES AS REQUIRED BY MANUFACTURER FOR COMPLETE WORKING SYSTEM, INCLUDING ANY ACCESSORIES ASSOCIATED WITH LONG LENGTH APPLICATIONS WHERE APPLICABLE. ADJUST ROUTING AS NECESSARY IN FIELD FOR ANY OBSTACLES.
2. PROVIDE REFRIGERANT LINES FROM CONDENSING UNIT ON ROOF TO KITCHEN EQUIPMENT AS NOTED ON PLANS. LINES SHALL BE SIZED ACCORDING TO MANUFACTURER'S SPECIFICATIONS. PROVIDE ALL ACCESSORIES AS REQUIRED BY MANUFACTURER FOR COMPLETE WORKING SYSTEM, INCLUDING ANY ACCESSORIES ASSOCIATED WITH LONG LENGTH APPLICATIONS WHERE APPLICABLE. REFER TO KITCHEN EQUIPMENT VENDOR DRAWINGS FOR ADDITIONAL INFORMATION. ADJUST ROUTING AS NECESSARY IN FIELD FOR ANY OBSTACLES.

Bergmeyer
www.bergmeyer.com
BOS - 51 Sleeper St. 4th Floor Boston, MA 02210 617.542.1025
LA - 800 South Figueroa St. #1100 Los Angeles, CA 90017 212.337.1090

CONSULTANTS:
Schnackel engineers
800-581-0963
www.schnackel.com
SE JOB# 200363

SEAL/ SIGNATURE:
STATE OF MISSOURI
GREGORY ROY SCHNACKEL
NUMBER
E-28535
Date: 03/05/21
COA #: E-2009006642

| NO. | BY | DATE | DESCRIPTION |
|---|---|---|---|
| 1 | | 2021-03-09 | ADDENDUM #1 |
| | | 2021-01-11 | PERMIT/BID SET |
| | | 2020-12-21 | 75% SET |
| | | 2020-10-12 | DD SET |

SHAKE SHACK

SHAKE SHACK - LEE'S SUMMIT MO

LEE'S SUMMIT
MISSOURI
SHACK #1348

PERMIT/BID SET

MECHANICAL
REFIGERANT PIPING
LAYOUT PLAN

| | |
|---|---|
| DRAWN BY: | RAS |
| CHECKED BY: | GRS |
| JOB NO: | 20068.00 |

M102

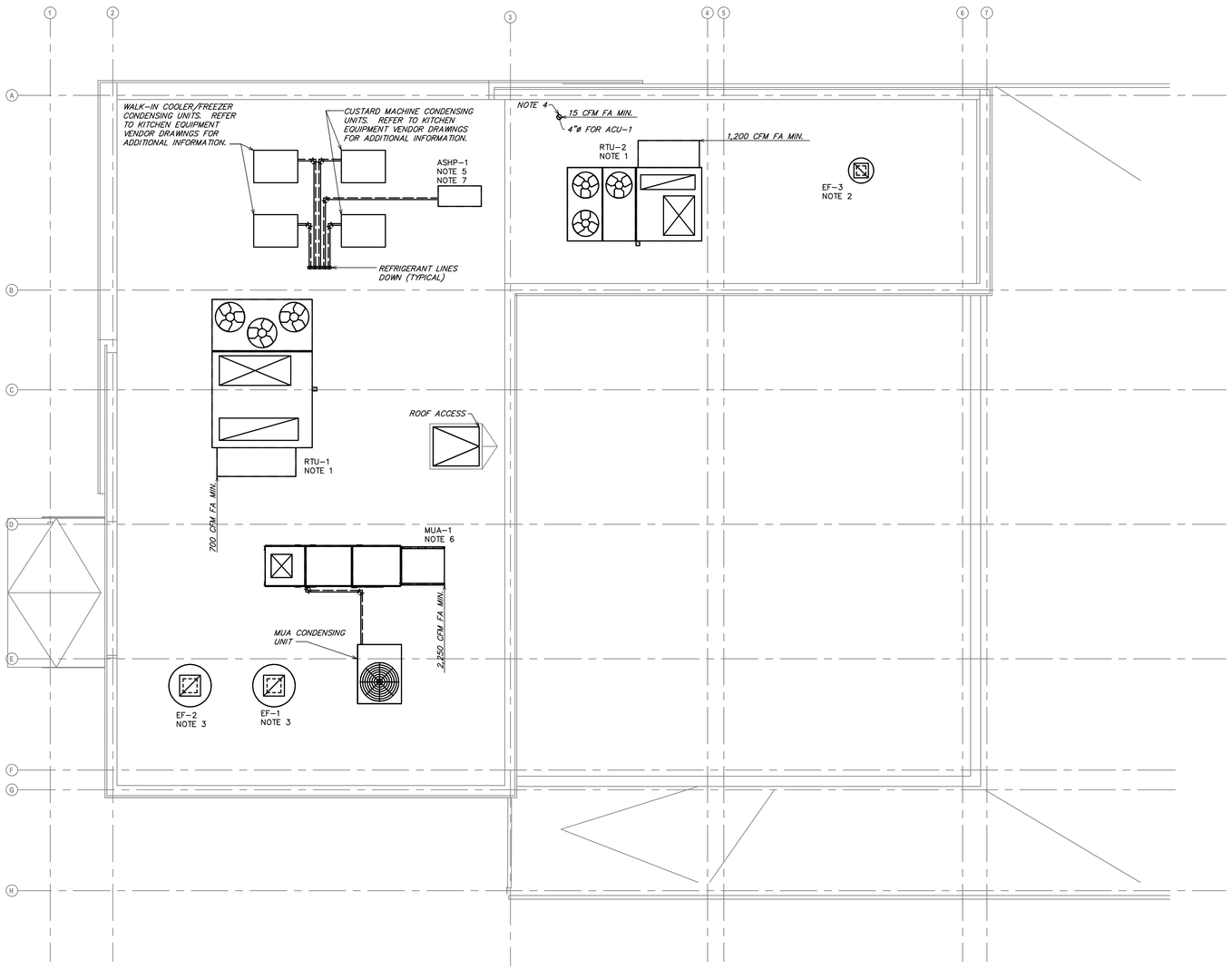


1 MECHANICAL ROOF PLAN
SCALE: 1/4" = 1'-0"

**GENERAL NOTES:**

A. EXISTING CONDITIONS ARE BASED ON RECORD DRAWINGS PROVIDED BY THE OWNER. CONTRACTOR SHALL ADJUST TO ACTUAL FIELD CONDITIONS AT NO ADDITIONAL EXPENSE TO THE PROJECT.
B. CONTRACTOR SHALL BE RESPONSIBLE FOR FIELD VERIFICATION OF ALL EXISTING CONDITIONS PRIOR TO SUBMITTING THE BID. NO ADDITIONAL COMPENSATION WILL BE PROVIDED FOR ANY EXTRAS DUE TO THE CONTRACTOR'S FAILURE TO VISIT THE PROJECT SITE PRIOR TO SUBMITTING THE BID. ANY DISCREPANCIES SHALL BE IMMEDIATELY REPORTED TO THE ENGINEER FOR RESOLUTION.
C. ALL CONTRACTORS SHALL REVIEW A COMPLETE SET OF CONSTRUCTION DOCUMENTS.
D. CONTRACTORS SHALL FAMILIARIZE THEMSELVES WITH DEMOLITION WORK PRIOR TO BIDDING AND START OF WORK. CONTRACTOR IS RESPONSIBLE TO DEMOLISH ALL EXISTING AS REQUIRED FOR INSTALLATION/CONSTRUCTION OF NEW WORK.
E. ALL WORK SHALL BE COMPLETED IN ACCORDANCE WITH ALL APPLICABLE GOVERNMENT AND LOCAL CODES.
F. MECHANICAL CONTRACTOR SHALL FIELD COORDINATE WITH ELECTRICAL CONTRACTOR FOR ALL POWER REQUIREMENTS.
G. ALL CONTRACTORS SHALL REVIEW A COMPLETE SET OF CONSTRUCTION DOCUMENTS AND COOPERATE WITH THE OTHER TRADES SO THAT THE INSTALLATION OF ALL EQUIPMENT MAY BE PROPERLY COORDINATED.
H. ALL EQUIPMENT FURNISHED SHALL FIT THE SPACE AVAILABLE WITH CONNECTIONS IN THE REQUIRED LOCATIONS AND WITH ADEQUATE SPACE FOR OPERATING AND SERVICING. THE DRAWINGS ARE GENERALLY DIAGRAMMATIC AND INDICATE THE INTENT OF THE INSTALLATION WHILE THE SPECIFICATIONS AND EQUIPMENT LIST DENOTE THE TYPE AND QUALITY OF MATERIAL AND WORKMANSHIP TO BE USED. THE DRAWINGS SHALL NOT BE SCALED FOR EXACT MEASUREMENTS. WHERE A CONFLICT EXISTS BETWEEN THE DRAWINGS AND THE SPECIFICATIONS, THE HIGHER AND/OR MORE COSTLY STANDARD WILL APPLY. THE CONTRACTOR SHALL PROMPTLY NOTIFY THE ENGINEER WHOSE DECISION SHALL BE FINAL. NO ALLOWANCE WILL BE MADE SUBSEQUENTLY IN THIS REGARD ON BEHALF OF THE CONTRACTOR AFTER AWARD OF THE CONTRACT.
I. COORDINATE DUCT ROUTING AND HEIGHTS WITH GENERAL CONTRACTOR. VERIFY ALL CLEARANCES BEFORE STARTING WORK.
J. THE CONTRACTOR SHALL INSTALL ALL PIPING, DUCTWORK AND EQUIPMENT AS REQUIRED TO CONFORM TO THE STRUCTURE, AVOID OBSTRUCTIONS, PRESERVE CEILING HEIGHTS AND HEADROOM AND MAKE ALL EQUIPMENT REQUIRING MAINTENANCE OR REPAIR ACCESSIBLE.
K. ALL DUCT CONNECTIONS TO HVAC EQUIPMENT MUST BE MADE WITH FLEXIBLE CONNECTORS.
L. DO NOT ATTACH ANYTHING TO DECK ABOVE. ATTACH TO STRUCTURE (i.e. BEAMS, JOISTS) ONLY. DUCT HANGERS SHALL BE INSTALLED IN ACCORDANCE WITH LOCAL CODE. ALL CONNECTIONS TO JOISTS SHALL BE MADE AT THE TOP CORD.
M. ALL DUCT DIMENSIONS INDICATED ARE CLEAR INSIDE DIMENSIONS. ALL SUPPLY AND UNTEMPERED OUTDOOR AIR DUCTWORK SHALL BE LINED WITH 1" ACOUSTICAL DUCT LINER OR WRAPPED WITH 1-1/2" THICK FIRE RETARDANT FIBERGLASS WITH A REINFORCED ALUMINUM FOIL JACKET AND SHALL BE APPROVED FOR USE BY SMACNA AND NAIMA. RETURN AIR TRANSFER DUCTS AND RETURN DUCTWORK WITHIN 10 FEET OF THE UNIT FAN SHALL BE LINED WITH 1" ACOUSTICAL DUCT LINER.
N. ALL SUPPLY AND UNTEMPERED OUTDOOR AIR DUCTWORK VISIBLE TO THE PUBLIC SHALL BE INTERNALLY LINED AND PAINTED TO MATCH THE SURROUNDING AREA. DUCT WRAP INSULATION IS NOT PERMITTED IN THESE AREAS.
O. EXPOSED SPIRAL DUCT TO BE GALVANIZED FINISH, FREE FROM SCRATCHES, DENTS OR BLEMISHES AND PAINTED TO MATCH THE SURROUNDING AREA. DUCT SHALL BE INTERNALLY LINED AND SEALED WITH DUCT SEALER COMPLETELY CONCEALED WITHIN THE DUCT JOINT. NO EXPOSED SEALER OR TAPE WILL BE ACCEPTED.
P. ALL EXPOSED DUCTWORK SHALL BE INSTALLED TIGHT TO THE BOTTOM OF THE STRUCTURE, THRU JOIST SPACE.
Q. PROVIDE REMOTE VOLUME DAMPER CONTROL MANUFACTURED BY YOUNG REGULATOR OR UNITED ENERTECH FOR DAMPERS LOCATED ABOVE INACCESSIBLE CEILINGS. LOCATE CONTROLLER ABOVE ACCESSIBLE CEILING LOCATION.
R. REFRIGERANT PIPING SHALL BE SIZED PER MANUFACTURER'S RECOMMENDATIONS. PROVIDE ALL ACCESSORIES AS REQUIRED BY MANUFACTURER FOR COMPLETE WORKING SYSTEM, INCLUDING ANY ACCESSORIES ASSOCIATED WITH LONG LENGTH APPLICATIONS WHERE APPLICABLE.
S. TENANT'S CONTRACTOR SHALL BE RESPONSIBLE FOR THE FIELD VERIFICATION OF ALL UTILITY RUNS AND/OR OTHER IMPROVEMENTS LOCATED ON THE PREMISES PRIOR TO BIDDING. TENANT'S CONTRACTOR SHALL ALSO BE RESPONSIBLE FOR ALL COSTS RELATING TO THE RELOCATION OF, DAMAGE TO, REPAIR OF ANY EXISTING UTILITY RUNS AND/OR IMPROVEMENTS WHICH ARE DAMAGED AS A RESULT OF TENANT'S WORK IN OR AROUND THE PREMISES.
T. ALL ROOFING WORK SHALL BE PERFORMED BY LANDLORD'S APPROVED ROOFING CONTRACTOR AT TENANT'S EXPENSE, IF REQUIRED IN LEASE OR TENANT CRITERIA MANUAL.
U. ALL GREASE EXHAUST DUCTWORK SHALL BE PROVIDED WITH 3" FOIL FACED THERMAL-CERAMIC INSULATION FOR GREASE DUCTS. INSULATION SHALL MEET NFPA 96 AND ASTM E 2336 REQUIREMENTS.
V. GREASE DUCT LEAKAGE TESTING MUST BE PERFORMED PRIOR TO CONCEALMENT OF THE DUCTWORK.
W. MECHANICAL CONTRACTOR SHALL PROVIDE TENANT WITH A WRITTEN ONE (1) YEAR MANUFACTURER'S WARRANTY ON ALL HVAC EQUIPMENT PROVIDED AND / OR INSTALLED. THE WARRANTY SHALL INCLUDE ALL LABOR, MATERIALS AND THREE (3) ROUTINE SERVICES INCLUDING FILTER CHANGES DURING A ONE (1) YEAR PERIOD.
X. AT THE COMPLETION OF CONSTRUCTION AN NEBB, AABC OR TABB CERTIFIED AIR BALANCE REPORT SHALL BE SUBMITTED TO THE ENGINEER AND LANDLORD. THE BALANCING SHALL BE COMPLETED BY NATIONAL TAB. CONTACT WILL TURNBOURH AT WILL@NATIONALTAB.COM OR 314-954-6244.

**HVAC NOTES:**

1. PROVIDE NEW RTU AS NOTED ON PLANS AND AS SCHEDULED ON SHEET M-601. FIELD VERIFY EXACT LOCATION.
2. PROVIDE NEW EXHAUST FAN AS NOTED ON PLANS AND SCHEDULED ON SHEET M-601. THE CONTRACTOR SHALL FIELD VERIFY THAT THE LOCATION SHOWN IS A MINIMUM OF 10'-0" FROM ANY OUTDOOR AIR INTAKE.
3. NEW HALTON GREASE EXHAUST FAN TO BE PROVIDED BY OWNER FOR INSTALLATION BY MECHANICAL CONTRACTOR. SEE HALTON SHEETS M701 THROUGH M705 FOR ADDITIONAL INFORMATION. CONTRACTOR SHALL FIELD VERIFY THAT THE LOCATION SHOWN IS A MINIMUM OF 10'-0" FROM ANY OUTDOOR AIR INTAKE.
4. PROVIDE GOOSENECK TERMINATION FOR OUTDOOR AIR INTAKE FOR ACU-1. CONTRACTOR SHALL FIELD VERIFY THAT THE LOCATION IS A MINIMUM OF 10'0" FROM ANY EXHAUST/FLUE TERMINATION.
5. PROVIDE REFRIGERANT LINES FROM ASHP-1 ON ROOF TO ACU-1 IN ROOM 108. LINES SHALL BE SIZED ACCORDING TO MANUFACTURER'S SPECIFICATIONS. PROVIDE ALL ACCESSORIES AS REQUIRED BY MANUFACTURER FOR COMPLETE WORKING SYSTEM, INCLUDING ANY ACCESSORIES ASSOCIATED WITH LONG LENGTH APPLICATIONS WHERE APPLICABLE.
6. NEW HALTON MAKE-UP AIR UNIT TO BE PROVIDED BY OWNER FOR INSTALLATION BY THE MECHANICAL CONTRACTOR. SEE HALTON SHEET M-701 THROUGH M-705 FOR ADDITIONAL INFORMATION.
7. PROVIDE AHSP AS NOTED ON PLANS AND SCHEDULED ON SHEET M601.

RELEASE FOR CONSTRUCTION
AS NOTED ON PLANS REVIEW
DEVELOPMENT SERVICES
LEE'S SUMMIT, MISSOURI
03/10/2021

Bergmeyer
www.bergmeyer.com
BOS - 51 Sleeper St. 4th Floor Boston, MA 02210 617.542.1025
LA - 800 South Figueroa St. #1000 Los Angeles, CA 90017 212.337.1090

CONSULTANTS:
Schnackel engineers
800-581-0963
www.schnackel.com
SE JOB# 200363

SEAL/ SIGNATURE:
STATE OF MISSOURI
GREGORY ROY SCHNACKEL
NUMBER E-026570
Date: 03/05/21
COA # E-2009006642

| NO. | BY | DATE | DESCRIPTION |
|---|---|---|---|
| 1 | | 2021-03-09 | ADDENDUM #1 |
| | | 2021-01-11 | PERMIT/BID SET |
| | | 2020-12-21 | 75% SET |
| | | 2020-10-12 | DD SET |

SHAKE SHACK

SHAKE SHACK - LEE'S SUMMIT MO

LEE'S SUMMIT
MISSOURI
SHACK #1348

PERMIT/BID SET

MECHANICAL ROOF PLAN

| | |
|---|---|
| DRAWN BY: | RAS |
| CHECKED BY: | GRS |
| JOB NO: | 20068.00 |

M150

RELEASE FOR CONSTRUCTION
AS NOTED ON PLANS REVIEW
DEVELOPMENT SERVICES
LEE'S SUMMIT, MISSOURI
03/10/2021

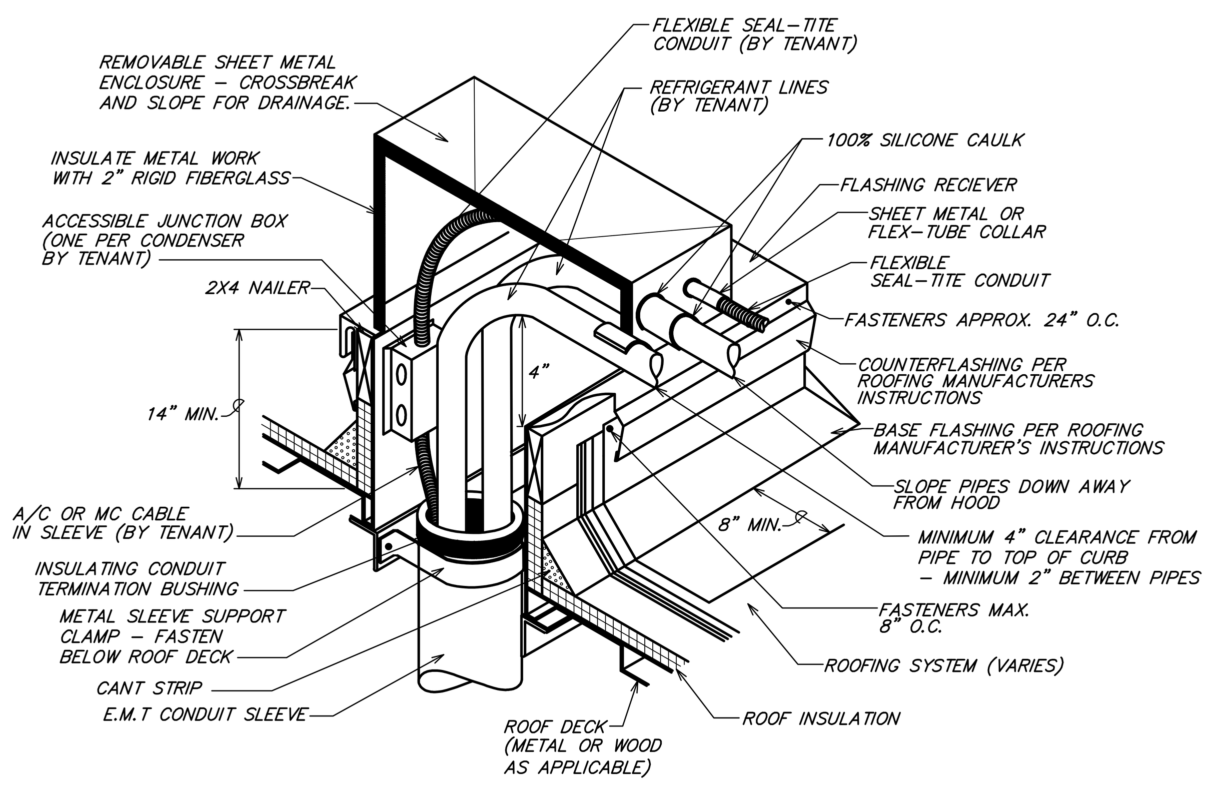


## 7 CONDENSER REFRIGERANT LINE PIPING AND POWER THROUGH ROOF DECK

NOT TO SCALE

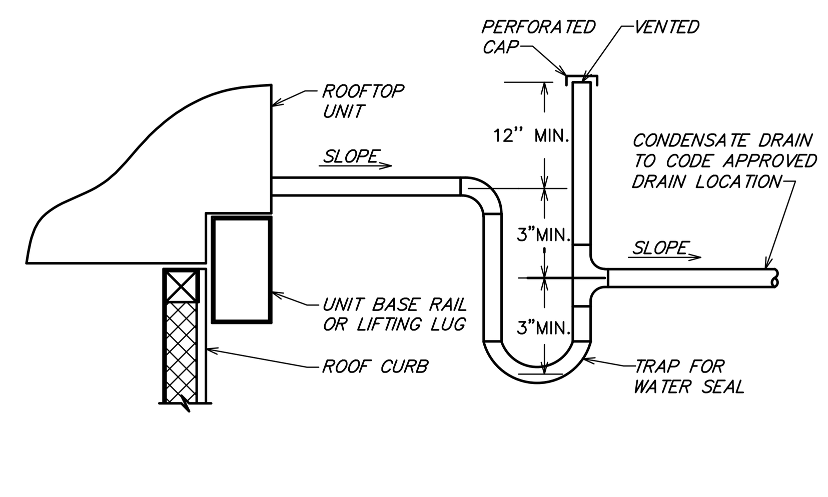


## 8 ROOF TOP UNIT CONDENSATE DETAIL

NOT TO SCALE

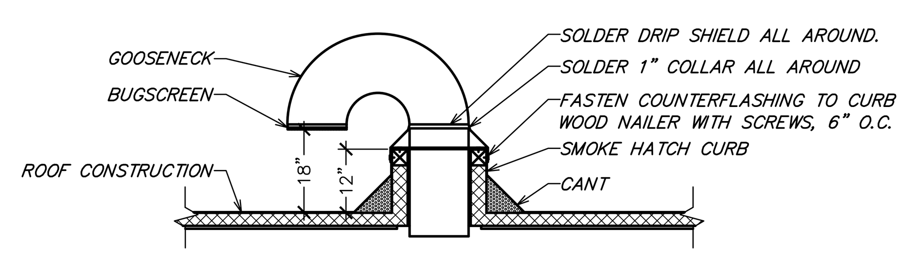


ALL COUNTERFLASHING DRIP SHIELD AND EXPOSED DUCTWORK SHALL BE 18 GA. GALVANIZED SHEETMETAL ALL SOLDERED AIR–TIGHT CONSTRUCTION

## 9 GOOSENECK WEATHERHOOD DETAIL

NOT TO SCALE

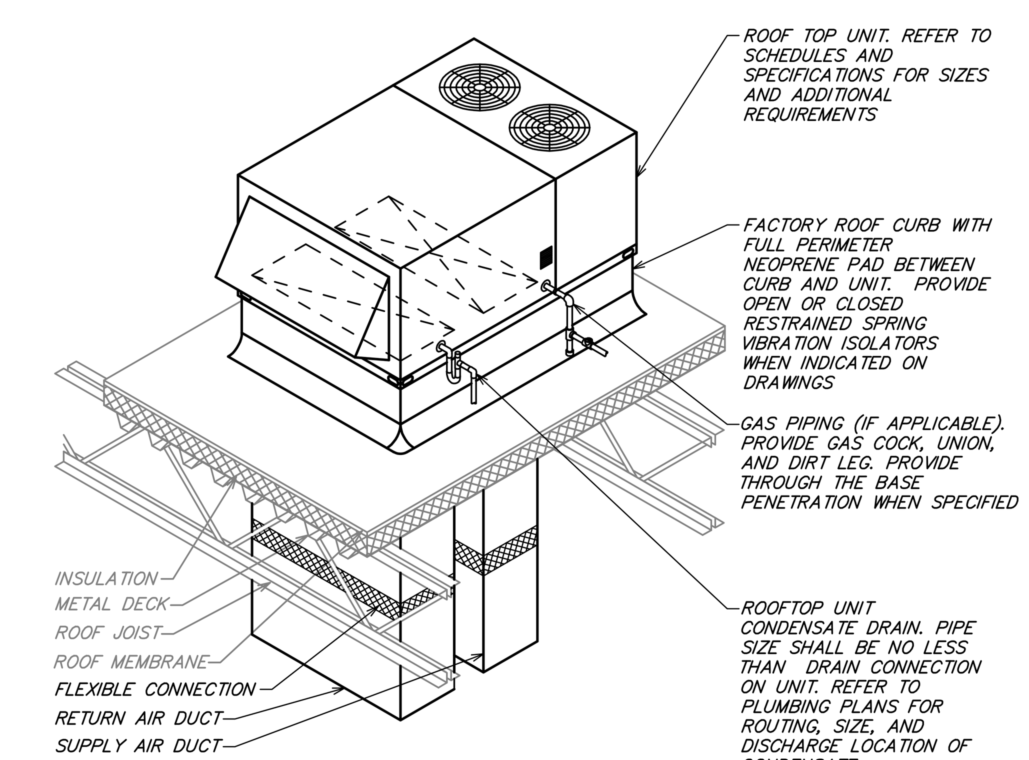


**NOTES:**
1. PROVIDE THROUGH CURB ELECTRICAL CONNECTIONS. NO ROOF PENETRATIONS OF ELECTRICAL CONDUITS WILL BE ACCEPTABLE.
2. DUCT SMOKE DETECTOR SHALL BE MOUNTED AND INSTALLED PER LOCAL CODES.

## 10 TYPICAL ROOF TOP UNIT DETAIL

NOT TO SCALE

| MAXIMUM HALF OF DUCT PERIMETER | PAIR AT 10 FT. SPACING | | PAIR AT 8 FT. SPACING | | PAIR AT 5 FT. SPACING | | PAIR AT 4 FT. SPACING | |
|---|---|---|---|---|---|---|---|---|
| | STRAP | WIRE/ ROD | STRAP | WIRE/ ROD | STRAP | WIRE/ ROD | STRAP | WIRE/ ROD |
| P/2 = 30" | 1" x 22 GA. | 10 GA. (.135") | 1" x 22 GA. | 10 GA. (.135") | 1" x 22 GA. | 12 GA. (.106") | 1" x 22 GA. | 12 GA. (.106") |
| P/2 = 72" | 1" x 18 GA. | 3/8" | 1" x 20 GA. | 1/4" | 1" x 22 GA. | 1/4" | 1" x 22 GA. | 1/4" |
| P/2 = 96" | 1" x 16 GA. | 3/8" | 1" x 18 GA. | 3/8" | 1" x 20 GA. | 3/8" | 1" x 22 GA. | 1/4" |
| P/2 = 120" | 1 1/2" x 16 GA. | 1/2" | 1" x 16 GA. | 3/8" | 1" x 18 GA. | 3/8" | 1" x 20 GA. | 1/4" |
| P/2 = 168" | 1 1/2" x 16 GA. | 1/2" | 1 1/2" x 16 GA. | 1/2" | 1" x 16 GA. | 3/8" | 1" x 18 GA. | 3/8" |
| P/2 = 192" | --- | 1/2" | 1 1/2" x 16 GA. | 1/2" | 1" x 16 GA. | 3/8" | 1" x 16 GA. | 3/8" |
| P/2 = 193" UP | SPECIAL ANALYSIS REQUIRED | | | | | | | |

| WHEN STRAPS ARE LAP JOINED USE THESE MINIMUM FASTENERS: | SINGLE HANGER MAXIMUM ALLOWABLE LOAD: STRAP | SINGLE HANGER MAXIMUM ALLOWABLE LOAD: WIRE OR ROD (DIA.) |
|---|---|---|
| 1" x 18, 20, 22 GA. – TWO #10 OR ONE 1/4" BOLT<br>1" x 16 GA. – TWO 1/4" DIA.<br>1" x 16 GA. – TWO 3/8" DIA.<br>PLACE FASTENERS IN SERIES, NOT SIDE BY SIDE. | 1" x 22 GA. – 260 LBS.<br>1" x 20 GA. – 320 LBS.<br>1" x 18 GA. – 420 LBS.<br>1" x 16 GA. – 700 LBS.<br>1 1/2" x 16 GA. – 1100 LBS. | 0.106" – 80 LBS.<br>0.135" – 120 LBS.<br>0.162" – 160 LBS.<br>1/4" – 270 LBS.<br>3/8" – 680 LBS.<br>1/2" – 1250 LBS.<br>5/8" – 2000 LBS.<br>3/4" – 3000 LBS. |

NOTES:
1. DIMENSIONS OTHER THAN GAUGE ARE IN INCHES.
2. TABLES ALLOW FOR DUCT WEIGHT, 1 LB./SF INSULATION WEIGHT AND NORMAL REINFORCEMENT AND TRAPEZE WEIGHT, BUT NO EXTERNAL LOADS.
3. STRAPS ARE GALVANIZED STEEL; OTHER MATERIALS ARE UNCOATED STEEL.
4. ALLOWABLE LOADS FOR P/2 ASSUME THAT DUCTS ARE 16 GA. MAXIMUM, EXCEPT THAT WHEN MAXIMUM DUCT DIMENSION (W) IS OVER 60" THEN P/2 MAXIMUM IS 1.25 W.
5. 12, 10 OR 8 GA. WIRE IS STEEL OF BLACK ANNEALED, BRIGHT BASIC OR GALVANIZED TYPE.
6. DUCTS SHALL BE SUPPORTED AT INTERVALS NOT EXCEEDING 10 FEET.

## 4 RECTANGULAR DUCT HANGER TABLE

NOT TO SCALE

***NOTES:***
1. THERMAL CERAMICS FIREMASTER FASTWRAP XL IS TESTED TO ASTM E2336 AND UL LISTED PER HNKT.G18 TO PROVIDE ZERO CLEARANCE TO COMBUSTIBLES AND TO PROVIDE A 1 OR 2 HOUR EXPOSURE. THROUGH PENETRATIONS FIRESTOP SYSTEMS ARE TESTED IN ACCORDANCE WITH ASTM E 814 (UL 1479). ICC–ES APPROVAL PER REPORT ESR 2213 OR EST 2832.
2. COMPLIANT TO THE FOLLOWING CODES:
   NFPA 96
   INTERNATIONAL MECHANICAL CODES
   UNIFORM MECHANICAL CODE
   CALIFORNIA MECHANICAL CODE
3. INSULATION APPLIED IN TWO LAYERS WITH TIGHT COMPRESSION JOINT ON BOTH LAYERS AT ALL JOINTS.
4. MINIMUM 16 GAUGE CARBON STEEL (OR 18 GAUGE STAINLESS STEEL) RECTANGULAR OR ROUND GREASE EXHAUST DUCT.
5. INSTALL UL LISTED AND LIQUID TIGHT THERMAL CERAMICS FASTDOOR XL ACCESS DOORS AT ALL CHANGES IN DIRECTION AND AT MINIMUM EVERY 20 FT ON HORIZONTAL RUNS.
6. SUPPORT HANGER SYSTEMS DO NOT NEED TO BE WRAPPED PROVIDED THE HANGER RODS ARE MINIMUM OF 3/8" IN. DIAMETER AND SUPPORTS ARE MINIMUM 2 2 X 1/8 IN. STEEL ANGLE OR SMACNA EQUIVALENT SUPPORT SYSTEM.
7. THERMAL CERAMICS DUCT WRAP SHALL BE INSTALLED DIRECTLY ONTO THE DUCT AND APPLIED FROM THE HOOD CONNECTION TO THE CONNECTION OF THE FAN.
8. THERMAL CERAMICS DUCT ENCLOSURE SYSTEM SHALL BE INSTALLED IN STRICT ACCORDANCE WITH MANUFACTURERS INSTRUCTIONS AND UL LISTINGS.

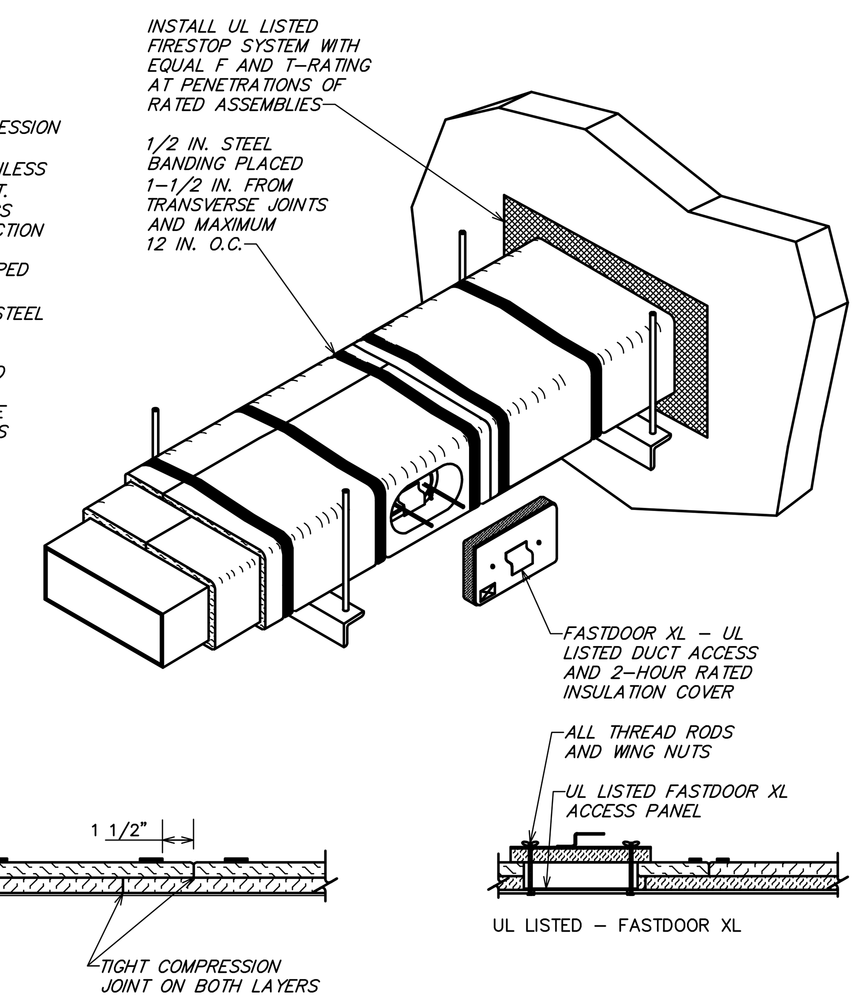


** DETAIL COURTESY OF MORGAN THERMAL CERAMICS.

## 5 FIREMASTER FASTWRAP XL DETAIL

NOT TO SCALE

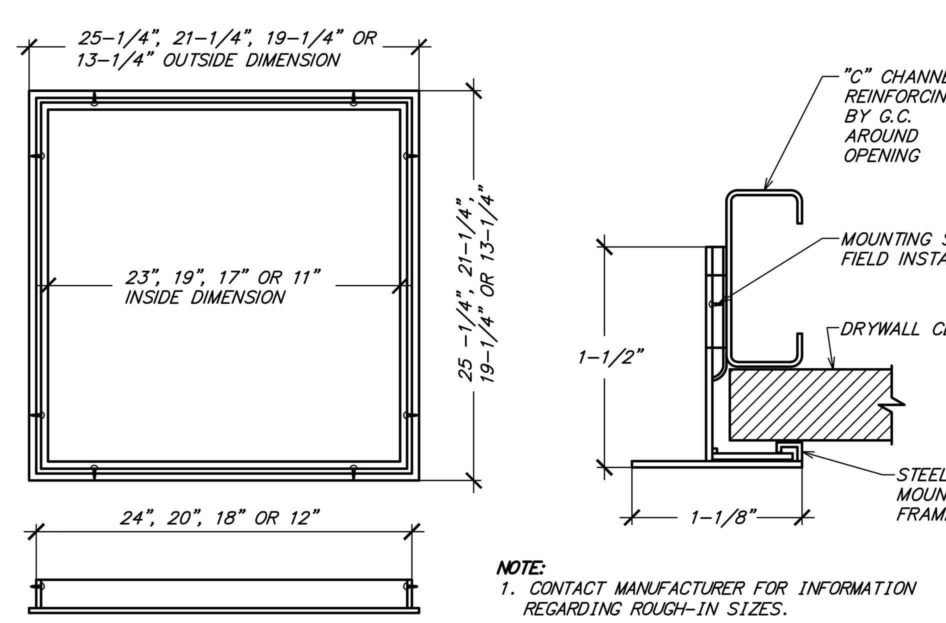


***NOTE:***
1. CONTACT MANUFACTURER FOR INFORMATION REGARDING ROUGH–IN SIZES.

## 6 TYPICAL DRYWALL MOUNTING FRAME DETAIL

NOT TO SCALE

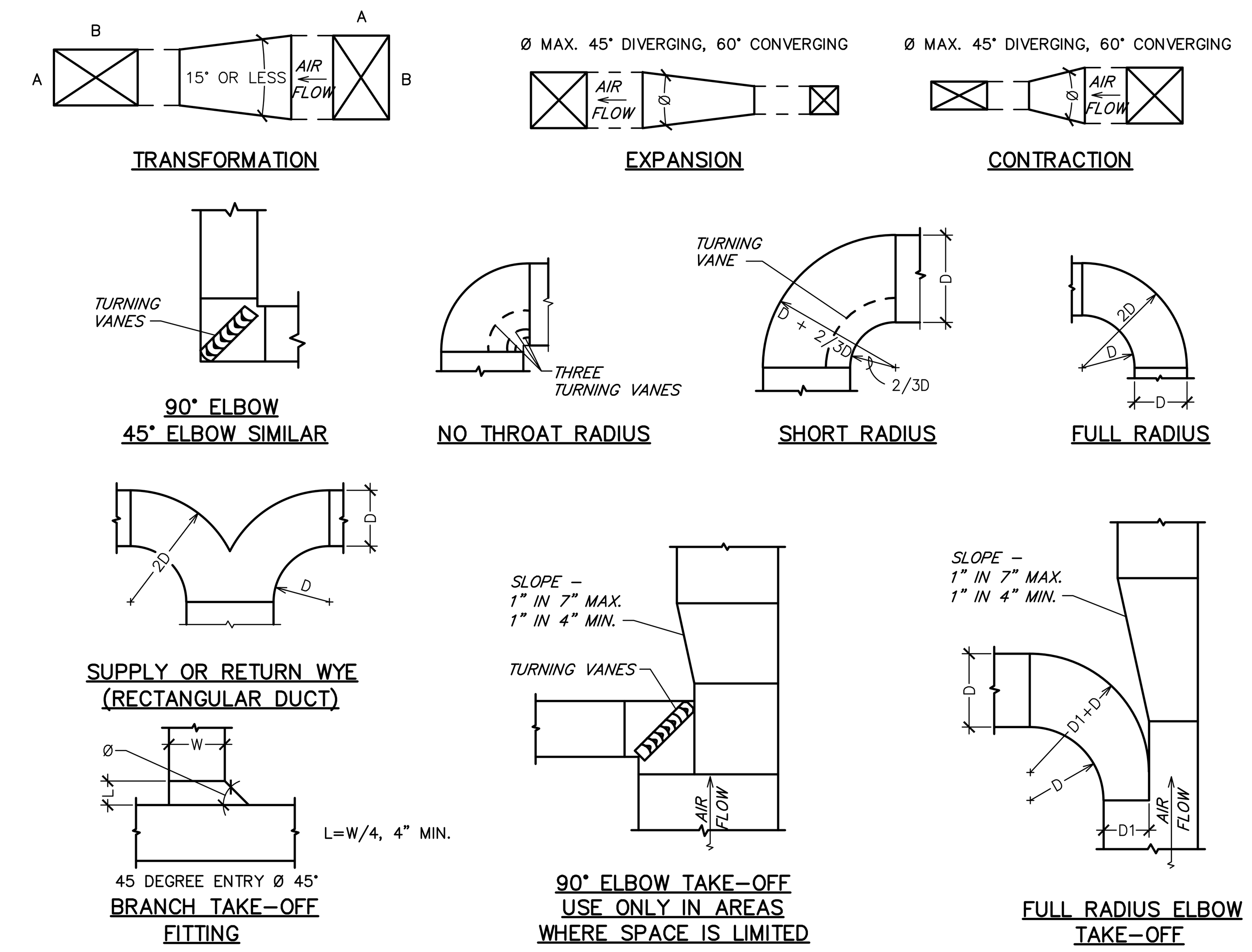


## 1 DUCTWORK DETAILS

NOT TO SCALE

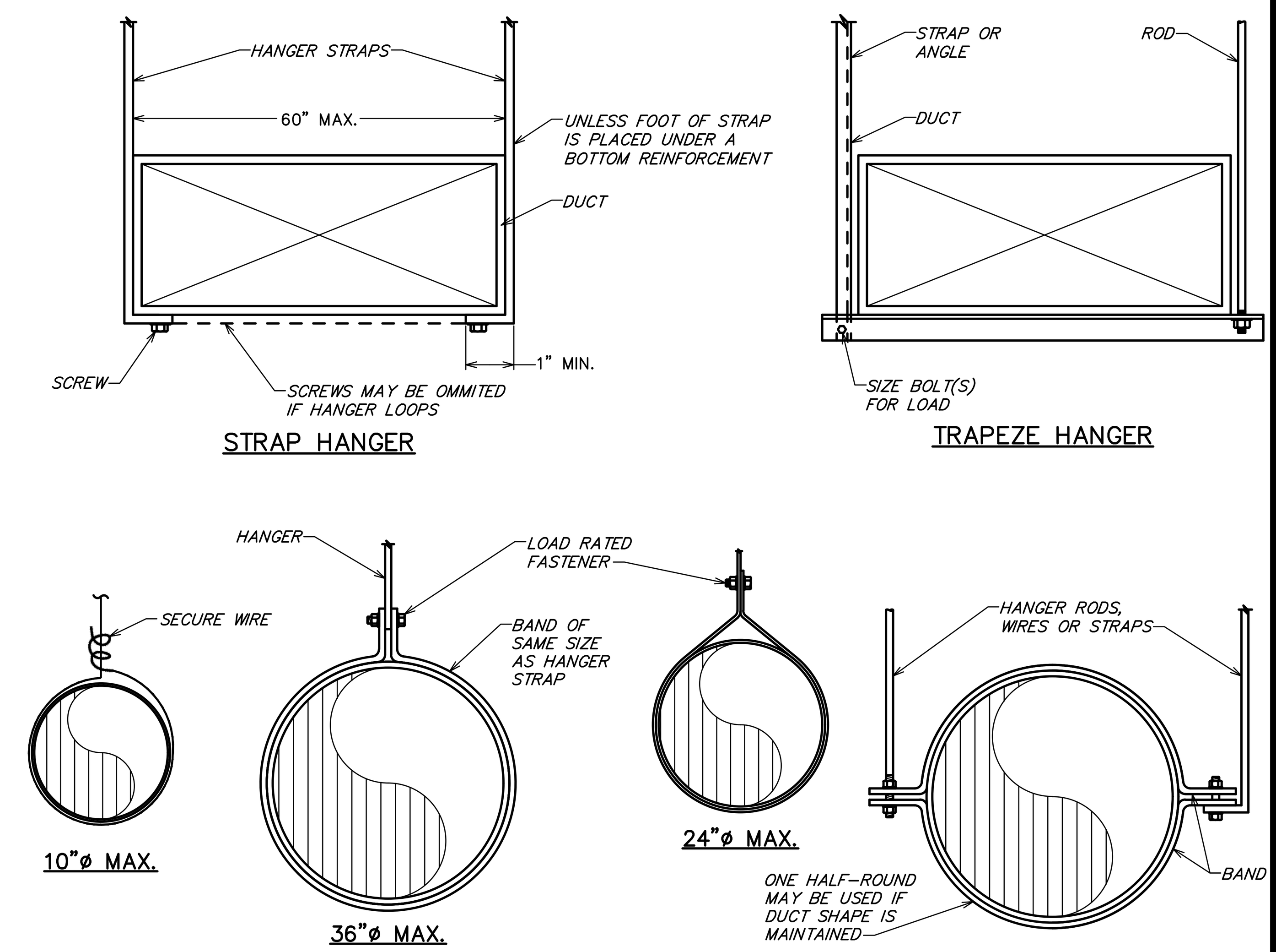


NOTE: HANGERS MUST NOT DEFORM DUCT SHAPE

## 2 DUCT HANGER DETAIL

NOT TO SCALE

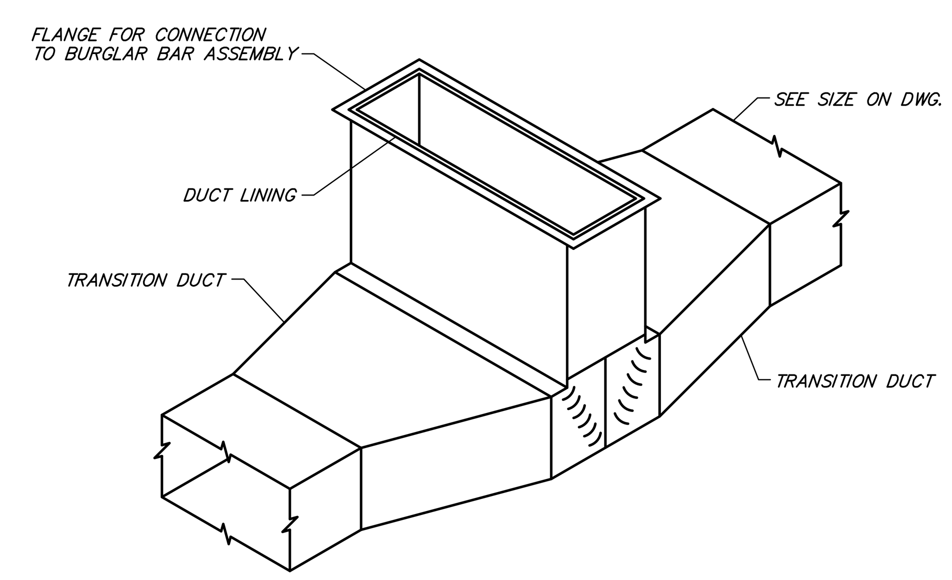


## 3 TYPICAL ROOF TOP UNIT TEE CONNECTION

NOT TO SCALE

Bergmeyer

BOS - 51 Sleeper St. 6th Floor Boston, MA 02210 617.542.1025

LA - 800 South Figueroa St. Suite 1080 Los Angeles, CA 90017 212.337.1090

www.bergmeyer.com

CONSULTANTS:

Schnackel engineers

800-581-0963
www.schnackel.com
SE JOB#: 200383

SEAL/ SIGNATURE:

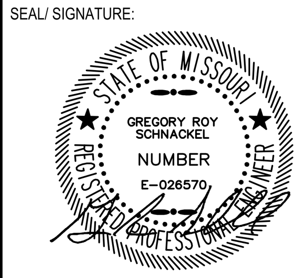


Date: 03/05/21
COA #: E–2009006642

| NO. | BY | DATE | DESCRIPTION |
|---|---|---|---|
| 1 | | 2021-03-09 | ADDENDUM #1 |
| | | 2021-01-11 | PERMIT/BID SET |
| | | 2020-12-21 | 75% SET |
| | | 2020-10-12 | DD SET |

SHAKE SHACK

SHAKE SHACK - LEE'S SUMMIT MO

LEE'S SUMMIT
MISSOURI
SHACK #1348

PERMIT/BID SET

MECHANICAL DETAILS

| | |
|---|---|
| DRAWN BY: | RAS |
| CHECKED BY: | GRS |
| JOB NO: | 20068.00 |

# M501

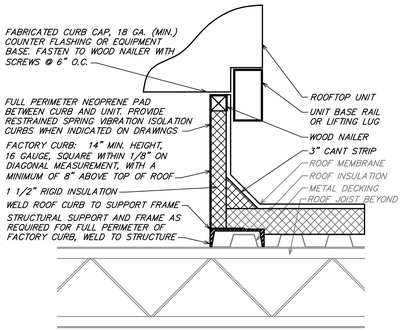


NOTES:
1. CUT AND PATCH EXISTING ROOFING AS REQUIRED FOR NEW CURB INSTALLATION.
2. CURB SHALL BE SHIMMED LEVEL. PROVIDE TAPERED ROOF CURB IF REQUIRED.
3. SECURELY INSTALL CURB TO ROOF STRUCTURE; USE FASTENERS AS REQUIRED BY ROOF CONSTRUCTION.

## 13 ROOF CURB DETAIL
NOT TO SCALE

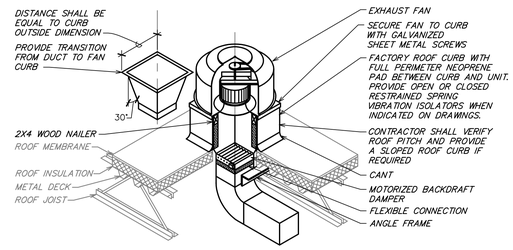


## 9 ROOF EXHAUST FAN DETAIL
NOT TO SCALE

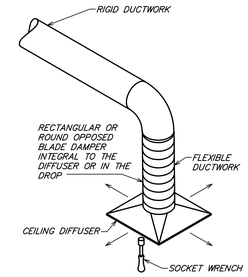


## 5 REMOTE VOLUME DAMPER CONTROLLER
NOT TO SCALE

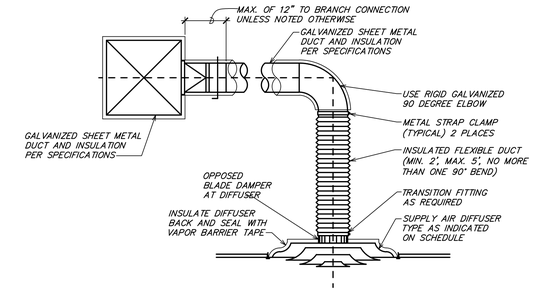


## 1 TYPICAL DIFFUSER CONNECTION
NOT TO SCALE

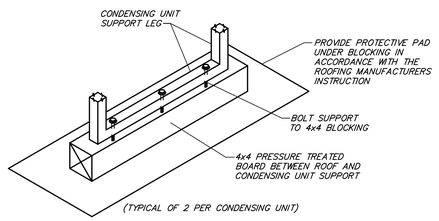


## 10 CONDENSING UNIT SUPPORT DETAIL
NOT TO SCALE

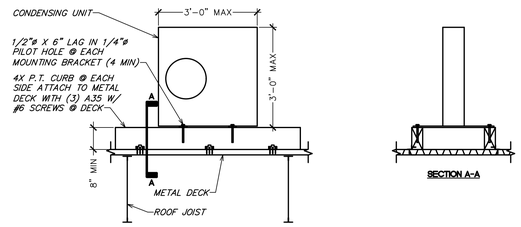


## 6 CONDENSING UNIT ANCHOR DETAIL (METAL)
NOT TO SCALE

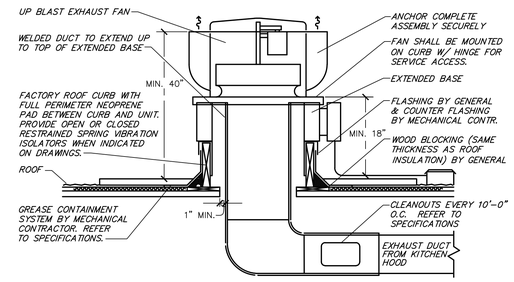


## 2 KITCHEN HOOD EXHAUST FAN
NOT TO SCALE

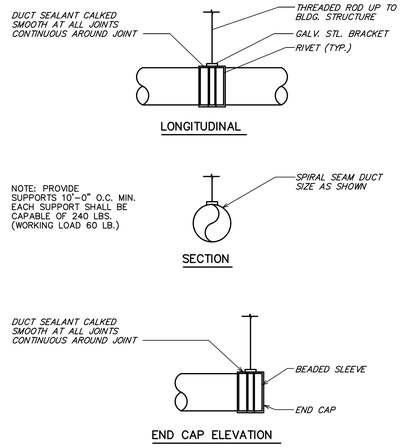


## 11 EXPOSED ROUND DUCT SUPPORT DETAIL
NOT TO SCALE

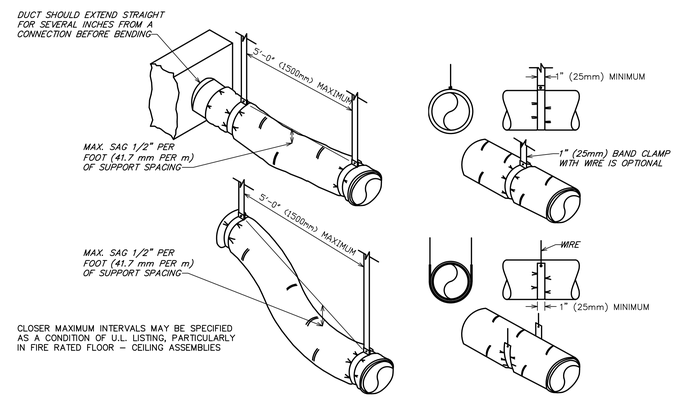


## 7 FLEXIBLE DUCT SUPPORTS
NOT TO SCALE

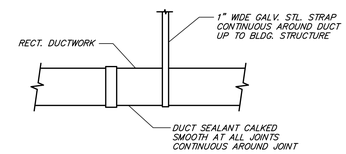


## 3 EXPOSED RECTANGULAR DUCT SUPPORT DETAIL
NOT TO SCALE

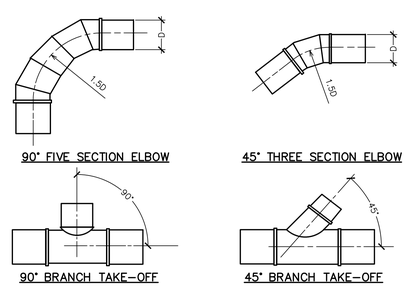


## 12 TYPICAL ROUND DUCT FITTINGS
NOT TO SCALE

| DIA. | WIRE DIA. | ROD | STRAP |
|---|---|---|---|
| 10" DN | ONE 12 GA. | 1/4" | 1" x 22 GA. |
| 11–18" | TWO 12 GA. OR ONE 8 GA. | 1/4" | 1" x 22 GA. |
| 19–24" | TWO 10 GA. | 1/4" | 1" x 22 GA. |
| 25–36" | TWO 8 GA. | 3/8" | 1" x 20 GA. |
| 37–50" | – | TWO 3/8" | TWO 1" x 20 GA. |
| 51–60" | – | TWO 3/8" | TWO 1" x 18 GA. |
| 61–84" | – | TWO 3/8" | TWO 1" x 16 GA. |
| 85–96" | – | TWO 1/2" | TWO 1 1/2" x 16 GA. |

NOTES:
1. STRAPS ARE GALVANIZED STEEL; RODS ARE UNCOATED OR GALVANIZED STEEL; WIRE IS BLACK ANNEALED, BRIGHT BASIC OR GALVANIZED STEEL. ALL ARE ALTERNATIVES.
2. TABLE ALLOWS FOR CONVENTIONAL WALL THICKNESS, AND JOINT SYSTEMS PLUS ONE LB/SF OF INSULATION WEIGHT. IF HEAVIER DUCTS ARE TO BE INSTALLED, ADJUST HANGER SIZES TO BE WITHIN THEIR LOAD LIMITS.

## 8 ROUND DUCT HANGER TABLE
NOT TO SCALE

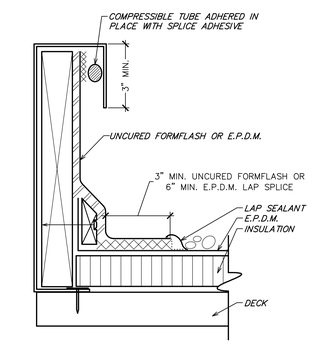


## 4 CURB FLASHING DETAIL
NOT TO SCALE

RELEASE FOR CONSTRUCTION
AS NOTED ON PLANS REVIEW
DEVELOPMENT SERVICES
LEE'S SUMMIT, MISSOURI
03/10/2021


Bergmeyer
www.bergmeyer.com
LA - 800 South Figueroa St. Suite 1100 Los Angeles, CA 90017 212.337.1090
BOS - 51 Sleeper St. 4th Floor Boston, MA 02210 617.542.1025

CONSULTANTS:
Schnackel engineers
800-581-0963
www.schnackel.com
SE JOB# 200363


SEAL/ SIGNATURE:
STATE OF MISSOURI
GREGORY ROY SCHNACKEL
NUMBER E-026570
Date: 03/05/21
COA #: E-2009006642

| NO. | BY | DATE | DESCRIPTION |
|---|---|---|---|
| 1 | | 2021-03-09 | ADDENDUM #1 |
| | | 2021-01-11 | PERMIT/BID SET |
| | | 2020-12-21 | 75% SET |
| | | 2020-10-12 | DD SET |

SHAKE SHACK

SHAKE SHACK - LEE'S SUMMIT MO

LEE'S SUMMIT
MISSOURI
SHACK #1348

PERMIT/BID SET

MECHANICAL DETAILS

| | |
|---|---|
| DRAWN BY: | RAS |
| CHECKED BY: | GRS |
| JOB NO: | 20068.00 |

M502

RELEASE FOR CONSTRUCTION
AS NOTED ON PLANS REVIEW
DEVELOPMENT SERVICES
LEE'S SUMMIT, MISSOURI
03/10/2021

SECTION 230000 – HVAC GENERAL CONDITIONS
SECTION 230548 – VIBRATION AND SEISMIC CONTROLS FOR HVAC PIPING AND EQUIPMENT
SECTION 230593 – TESTING, ADJUSTING, AND BALANCING FOR HVAC
SECTION 230713 – DUCT INSULATION
SECTION 230713.13 – GREASE DUCT FIREPROOFING
SECTION 230719 – HVAC PIPING INSULATION
SECTION 232300 – REFRIGERANT PIPING
SECTION 233100 – HVAC DUCTS AND CASINGS
SECTION 233300 – AIR DUCT ACCESSORIES
SECTION 233423 – HVAC POWER VENTILATORS
SECTION 233700 – AIR OUTLETS AND INLETS
SECTION 237413 – PACKAGED OUTDOOR ROOF TOP UNITS – GAS FIRED
SECTION 238127 – SMALL SPLIT-SYSTEM HEATING AND COOLING
SECTION 23 0800 – COMMISSIONING OF HVAC
SECTION 23 0993 – SEQUENCE OF OPERATIONS FOR HVAC CONTROLS

## SECTION 230000 – HVAC GENERAL CONDITIONS

PART 1 GENERAL

1.01 APPLICABILITY
A. This section supplements all sections of the Specifications for Division 23 and shall apply to all phases of work hereinafter specified, shown on the Drawings, or required to provide a complete installation of approved HVAC systems.
1.02 DEFINITIONS
A. "Work" is hereby defined as, "The construction and services required by the Contract Documents whether completed or partially completed and includes all labor, materials, equipment, and services provided or to be provided by the Contractor to fulfill the Contractor's obligations. The work may constitute the whole or a part of the project."
B. "Furnish" is hereby defined as, "To supply and deliver, unload, and inspect for damage."
C. "Install" is hereby defined as, "To unpack, assemble, erect, apply, place, finish, cure, protect, clean, connect, and place into operation into the work."
D. "Provide" is hereby defined as, "To furnish and install."
E. "Connect" is hereby defined as, "To bring service to the equipment and make final attachment including necessary ductwork, piping, wiring, etc."
F. "Concealed" is hereby defined as, "Hidden from sight in chases, furred spaces, shafts, hung ceilings, embedded in construction, in crawl spaces, or buried."
G. "Exposed" is hereby defined as, "Not installed underground nor concealed as defined by the Specifications."
H. "Drawings" is hereby defined as, "All plans, details, equipment schedules, diagrams, sketches, etc. issued for the construction of the work."
1.03 CODES AND STANDARDS
A. Perform work in accordance with the applicable Building Code, Electrical Code, Fire Code, Mechanical Code, Plumbing Code, Energy Code, and all other applicable codes, amendments, and ordinances. Also perform all work in accordance with the Americans with Disabilities Act (ADA) and the Authority Having Jurisdiction (AHJ) including Fire Marshal(s).
B. Perform work in accordance with Landlord requirements, including any Tenant Criteria Manuals and Lease Exhibits, where applicable.
C. Perform work in accordance with the applicable utility companies serving the project. Make all arrangements with the utility companies for proper coordination of the work.
D. Recognized Standards: Design, manufacture, testing and method of installation of all apparatus and materials furnished under the requirements of these Specifications shall conform to the latest publications or standard rules of Underwriters Laboratories, Inc. (U.L.), American Society for Testing and Materials (ASTM), American National Standards Institute (ANSI), and National Electrical Code (NEC), National Fire Protection Association (NFPA), American Society of Heating, Refrigerating and Air-Conditioning Engineers (ASHRAE), and the Sheet Metal and Air Conditioning Contractors' National Association (SMACNA).
E. The Contract Documents shall take precedence where the Contract Documents exceed code, Landlord, utility, or recognized standards requirements.
1.04 PERMITS AND FEES
A. Permits, licenses, fees, inspections and arrangements required for the work under this Contract shall be obtained by the Contractor at his expense, unless otherwise indicated.
1.05 CONTRACT DRAWINGS
A. The Contractor is responsible to obtain, fully understand, and coordinate the work with the complete set of Contract Documents. Any required corrections, including all associated costs, arising from issues caused by the Contractor's failure to understand and/or coordinate the work with the complete set of Contract Documents are the Contractor's sole responsibility.
B. Work under these sections is diagrammatic unless indicated otherwise and is intended to convey the scope of work and indicate the general arrangement of ductwork, piping, equipment, and accessories. Follow these drawings in laying out the work and verify spaces for the installation of these materials and equipment. Wherever a question exists as to the exact intended location of ductwork, piping, or equipment, obtain instructions from the Architect before proceeding with the work.
C. Notify the Architect for resolution if a discrepancy is discovered within the Contract Documents. Failure of the Contractor to notify the Architect of discrepancies shall result in the resolution becoming the Contractor's responsibility and subject to the Architect's review and possible rejection. Should the Architect reject a discrepancy resolution of which they were not notified, the Contractor is fully responsible to correct the installation, including all associated costs, until approval of the installation is given by the Architect.
1.06 EXISTING CONDITIONS
A. Verify all existing conditions prior to beginning work.
B. Any existing conditions indicated in the Contract Documents are based on information drawings provided by others and possibly limited field verification. The Contractor shall adjust for actual field conditions at no additional expense to the Owner.
C. The Contractor shall visit the project site, review existing conditions against the Contract Documents, and familiarize himself with the work prior to bidding and start of the work. By signing the Contract, the Contractor acknowledges the site visit has been completed and the existing conditions are accepted.
D. The Contractor shall notify the Architect of major discrepancies in writing so the appropriate modifications to the design can be made without delay to the project. The Contractor assumes full responsibility of adjusting for discrepancies of which the Architect is not informed.
1.07 SUBMITTALS
A. Shop Drawings:
1. Furnish the following submittals to the Architect for review by the Engineer:
a. Provide product data and shop drawings for vibration isolation.
b. Provide balancing firm qualifications and final test report for Testing, Adjusting, and Balancing.
c. Provide product data for duct insulation.
d. Provide product data for grease duct fireproofing (if specified).
e. Provide product data for HVAC piping insulation.
f. Provide product data and shop drawings for HVAC ductwork.
g. Provide product data for air duct accessories.
h. Provide product data and shop drawings for HVAC power ventilators.
i. Provide product data and shop drawings for air outlets and inlets.
j. Provide product data and shop drawings for packaged rooftop units.
2. Submittals other than those listed above will not be reviewed and will be returned stating as such.
3. Shop drawings shall be prepared by a manufacturer's representative, and shall contain names of the manufacturer and cut sheets of equipment to be used on the project. Use manufacturer's specification sheets identified by number indicated on drawings or schedules. Indicate catalog number on the cut sheets. As applicable, provide construction data, weight and dimensional data, voltage ratings, performance data, listing data, pump curves, fan curves and sound data as part of the shop drawing submittal.
4. Submittals are reviewed only for general compliance with the Contract Documents. Dimensions, quantities and details are not checked during submittal review. Review of the submittals does not relieve the Contractor of the responsibility for providing all materials, equipment and accessories necessary for a complete and operational system meeting the requirements of the project and the intent of the Contract Documents. The responsibility for coordination of substituted materials and equipment lies solely with the substituting Contractor.
5. Electrical Characteristics: Verify that proper power supply is available prior to ordering equipment. Verify proper voltage, phase and current rating of power supply and inform Engineer of any deviations prior to order, connection of equipment or start-up. Responsibility for verification of proper power supply voltage and any product returns or damage resulting from incorrect connections shall rest with this Contractor.
B. Test Reports: Provide Testing, Adjusting, and Balancing (TAB) and Commissioning reports to the Architect for review by the Engineer and to the owner. All other reports shall be provided to the Owner.
1.08 QUALITY ASSURANCE
A. Manufacturer Qualifications: Company specializing in manufacturing the Products specified in this section with minimum five years experience.
B. Installer Qualifications: Company specializing in performing the work of this section, with minimum five years experience.
C. Products:
1. Listed and classified by Underwriters Laboratories Inc. as suitable for the purpose specified and indicated.
D. All equipment and components shall be free of all rust/corrosion or any visible damage. All items not complying with this requirement shall be replaced without any change in the Contract amount.
E. Equipment performance and accessories shall be as scheduled on the Drawings and specified herein. Inclusion in both locations is not a prerequisite to inclusion in the Contract. Equipment and accessories specified in either location shall be included in the Contract. Provide all necessary accessories and connections as required for a complete, functional system, including all required components reasonably inferred to as necessary although such components may or may not be specifically indicated in the Contract Documents.
F. Code or utility company requirements shall supersede any conflicting requirements of this section.
1.09 DELIVERY, STORAGE, AND HANDLING
A. Rooftop Equipment: Protect units from physical damage by storing off site until roof mounting curbs are in place, ready for immediate installation of units.
B. Protect insulation from weather and construction traffic, dirt, water, chemical, and mechanical damage, by storing in original wrapping.
C. Protect dampers and accessories from damage to operating linkages, blades and finishes.
D. Provide temporary end caps and closures on piping and fittings. Maintain in place until installation.
E. Protect motors stored on site from weather and moisture by maintaining factory covers and suitable weather-proof covering. For extended outdoor storage, remove motors from equipment and store separately.
1.10 WARRANTY AND GUARANTEE
A. Submit manufacturer's warranty and ensure forms have been filled out in Owner's name and registered with manufacturer.
B. Provide one year manufacturer warranty for pumps.
C. Provide three year manufacturers warranty for solid state ignition modules.
D. Provide five year manufacturers warranty for compressors, heat exchangers, condensing units, and electronic air cleaners.

PART 2 PRODUCTS

2.01 SUBSTITUTIONS
A. The manufacturers listed are listed to set minimum standards for quality, design, and functionality. The products of other manufacturers may be submitted, at the Contractor's option, during shop drawing review unless indicated otherwise. The products of other manufacturers shall meet or exceed all requirements of the Contract Documents. The Contractor accepts all responsibility for costs and coordination issues arising out of the substitution of materials or equipment, and the coordination of such substitutions with all other contractors and subcontractors.
B. The Contractor may use any of the following ductwork, piping or insulation materials at his option, provided the selected material meets with the approval of all State, local authorities and any utility company requirements. Verification of compliance of the selected material is the sole responsibility of the installing Contractor.

PART 3 EXECUTION

3.01 COORDINATION OF WORK
A. Examine the Contract Documents as a whole for the work of other trades. Coordinate all work accordingly.
B. Promptly report to the Architect any delay or difficulties encountered in the installation of the work, which might prevent prompt and proper installation, or make it unsuitable to connect with or receive the work of others. Failure to so report shall constitute an acceptance of the work of other trades as being fit and proper for the execution of this work.
C. Plan, lay out, and coordinate the work with all trades well enough in advance so that it proceeds with a minimum of interference to work that has not been completed and work that is in progress. Inform all trades of openings required for the work and provide all special frames, sleeves, and anchor bolts required. The HVAC system layout may be altered to suit the conditions with engineer approval, prior to the installation of any work and without additional cost to the Owner. Conflicts arising from lack of coordination shall be this Contractor's responsibility.
D. Perform all work in conformity with the Contract Documents and afford other trades reasonable opportunity for the execution of their work. Properly connect and coordinate this work with the work of other trades at such time and in such a manner as not to delay or interfere with their work.
E. All roofing penetrations shall be flashed and weather sealed by the roofing manufacturer's authorized roofing contractor at this Contractor's expense. This Contractor shall contract with the factory authorized roofing contractor for the specific roofing system applicable to this Project. The use of an unauthorized roofing contractor may result in removal and replacement of the penetration systems at this Contractor's expense.
F. All temperature control wiring, thermostat wiring, damper interlock wiring, control panel interlock wiring and miscellaneous low voltage wiring associated with the equipment furnished or installed under this contract shall be furnished and installed by the mechanical contractor or his sub-contractor. All wiring installed under this contract shall be in full compliance with the National Electrical Code, all State and local codes and requirements of the Electrical Specifications for this project.
3.02 EXAMINATION
A. Verify field measurements are as indicated on the Drawings.
B. Verify all equipment locations prior to rough-in. Maintain adequate equipment service clearance per manufacturer and code.
C. Verify routing of all ductwork and piping in field prior to fabrication or installation. Verify adequate clearance with structure, light fixtures, and ceiling heights.
D. Verify that proper fuel and power supply is available for connection.
3.03 INTERFACE WITH OTHER PRODUCTS
A. Install all ductwork, pipe, equipment, and accessories to preserve fire resistance rating of partitions and other elements, using materials and methods specified.
3.04 FIELD QUALITY CONTROL
A. Provide tests as necessary to establish the adequacy, quality, safety, completed status, and suitable operation of each system. Tests shall be conducted under the supervision of the Architect.
3.05 CLEANING AND REPAIR
A. Clean fire suppression parts to remove harmful materials.
B. Clean exposed surfaces of all ductwork pipe, equipment, and accessories of all dirt, debris, splatter, and other deleterious materials. Follow the manufacturer's recommendations for cleaning as applicable.
C. Repair or replace damaged ductwork, pipe, equipment, and accessories, as directed by and to the satisfaction of the Architect, where marring or disfigurement has occurred. All pipe, equipment, and accessories shall be new.
3.06 PROJECT CLOSEOUT
A. Project Record Documents: At project closeout, provide one printed copy and one electronic copy of the project record documents to the Owner. Record documents will not be reviewed by the Engineer.
B. Record Drawings: Information contained on project record drawings shall include, as a minimum:
1. Actual locations of all equipment, ductwork, air inlets/outlets, accessories, etc.
2. Actual routing of ductwork with sizes and elevations.
3. Actual locations of control devices including valves and volume dampers.
C. Operation and Maintenance Data: Provide descriptive literature, maintenance and operation data for all hvac equipment, control systems, accessories, and materials used. Include maintenance procedures, intervals, and parts list of each item installed under this contract. Include all manufacturer's guarantees and warranties.
D. Maintenance Materials: At project closeout, furnish to the Owner the following:
1. One set of replacement filters for all hvac equipment.
2. The maintenance contract for the hvac system, if applicable.
E. Test Reports: Submit to the Owner all testing reports.

END OF SECTION

## SECTION 230548 – VIBRATION AND SEISMIC CONTROLS FOR HVAC PIPING AND EQUIPMENT

PART 1 GENERAL

1.01 SECTION INCLUDES
A. Vibration isolators.
B. Equipment:
1. Fans, axial and centrifugal
2. Condensing units and air source heat pumps
3. Furnaces and fan coil units
1.02 SUBMITTALS
A. Product Data: Provide schedule of vibration isolator type with location and load on each.

PART 2 PRODUCTS

2.01 MANUFACTURERS
A. Isolation Technology, Inc.; Kinetics Noise Control, Inc.; Mason Industries.
2.02 VIBRATION ISOLATORS
A. Spring Hanger:
1. Springs: Minimum horizontal stiffness equal to 75 percent vertical stiffness, with working deflection between 0.3 and 0.6 of maximum deflection. Color code springs for load carrying capacity.
2. Housings: Incorporate neoprene isolation pad meeting requirements for neoprene pad isolators or rubber hanger with threaded insert.
3. Misalignment: Capable of 20 degree hanger rod misalignment.
4. For Exterior and Humid Areas: Hot dipped galvanized housings and neoprene coated springs.
B. Neoprene Pad Isolators:
1. Rubber or neoprene waffle pads.
a. Hardness: 30 durometer.
b. Thickness: Minimum 1/2 inch.
c. Maximum Loading: 50 psi.
d. Rib Height: Maximum 0.7 times width.
2. Configuration: Single layer.
C. Rubber Mount or Hanger: Molded rubber designed for 0.4 inch deflection with threaded insert.
D. Glass Fiber Pads: Neoprene jacketed pre-compressed molded glass fiber.

PART 3 EXECUTION

3.01 INSTALLATION
A. Install in accordance with manufacturer's instructions.
B. Provide flexible connections on all piping and ductwork connections to equipment. Refer to other sections of this Specification for the acceptable types of flexible connectors to be used.
C. Selection of type, thickness and deflection of vibration isolation shall be by the vibration control manufacturer based on the specific equipment type and size, as scheduled on the Drawings and indicated below.
3.02 SCHEDULES
A. Equipment Isolation Schedule: (Minimum deflection as sized by the isolation equipment manufacturer.)
1. Fans, axial and centrifugal.
a. Small fans up to 22" diameter wheel:
1. Rubber Mount or Hanger
2. Condensing units and air source heat pumps.
a. Slab on grade:
1. Base: Concrete Housekeeping Pad.
2. Isolation: Neoprene Pad, Rubber Mount or Glass Fiber Pad.
b. Above grade floor or roof structures:
1. Base: Plastic or Fiber Cement Pad.
2. Isolation: Neoprene Pad, Rubber Mount or Glass Fiber Pad.
3. Furnaces and fan coil units.
a. Floor mounted (all locations):
1. Base: Concrete Housekeeping Pad.
2. Isolation: Neoprene Pad, Rubber Mount or Glass Fiber Pad.
b. Suspended:
1. Isolation: Rubber or Spring Hanger.

END OF SECTION

## SECTION 230593 – TESTING, ADJUSTING, AND BALANCING FOR HVAC

PART 1 GENERAL

1.01 SECTION INCLUDES
A. Testing, adjustment, and balancing of air systems.
1. Air handling units; Packaged heating and/or cooling equipment; Fans. (Exhaust and supply); Coils; Terminal equipment; Air inlets and outlets. (Diffusers, grilles, louvers, etc.)
B. Measurement of final operating condition of HVAC systems.
C. Independent agency requirements.
1.02 SUBMITTALS
A. Vendor: Testing, adjustment, and balancing shall be provided by National TAB (NTAB). No alternates.
B. Final Report: Indicate deficiencies in systems that would prevent proper testing, adjusting, and balancing of systems and equipment to achieve specified performance.
1. Submit to the Construction Manager within two weeks after completion of testing, adjusting, and balancing.
2. Provide reports in bound manuals, complete with index page and indexing tabs, with cover identification at front and side. Include set of reduced drawings with air outlets and equipment identified to correspond with data sheets, and indicating thermostat and equipment locations.
3. Include actual instrument list, with manufacturer name, serial number, and date of calibration.
4. Form of Test Reports: Where the TAB standard being followed recommends a report format use that; otherwise, follow ASHRAE Std 111.
5. Include the following on the title page of each report:
a. Name, address and telephone number of Testing, Adjusting, and Balancing Agency.
b. Project: Name; location; Engineer; Contractor, Report date.
1.03 WARRANTY
A. The Balancing Contractor shall be prepared to return to the site at no additional cost to re-adjust air quantities as required to provide uniform temperatures, eliminate drafts and objectionable noises during the first year of occupancy, including one full heating and one full cooling season, after the acceptance of the final balancing report.

PART 2 PRODUCTS – NOT USED

PART 3 EXECUTION

3.01 GENERAL REQUIREMENTS
A. Perform total system balance in accordance with one of the following:
1. AABC MN-1, AABC National Standards for Total System Balance.
2. ASHRAE Std 111, Practices for Measurement, Testing, Adjusting and Balancing of Building Heating, Ventilation, Air-Conditioning, and Refrigeration Systems.
3. NEBB Procedural Standards for Testing Adjusting Balancing of Environmental Systems.
4. SMACNA HVAC Systems Testing, Adjusting, and Balancing.
B. Begin work after completion of systems to be tested, adjusted, or balanced and complete work prior to Substantial Completion of the Project.
C. Where HVAC systems and/or components interface with life safety systems, including fire and smoke detection, alarm, and control, coordinate scheduling and testing and inspection procedures with the authorities having jurisdiction.
D. TAB Agency Qualifications:
1. Company specializing in the testing, adjusting, and balancing of systems specified in this Section with a minimum of five years experience.
2. Certified by one of the following:
a. AABC, Associated Air Balance Council; upon completion submit AABC National Performance Guaranty.
b. NEBB, National Environmental Balancing Bureau.
c. TABB, The Testing, Adjusting, and Balancing Bureau of National Energy Management Institute.
3. The TAB Agency must be a completely independent, third party balancing contractor with no financial, common owners or other ties to the installing contractors.
E. TAB Supervisor and Technician Qualifications: Certified by same organization as TAB agency.
3.02 ADJUSTMENT TOLERANCES
A. Air Handling Systems; Air Outlets and Inlets; Hydronic Systems: Adjust to within plus or minus 15 percent of design.
3.03 RECORDING AND ADJUSTING
A. Permanently mark settings of valves, dampers, and other adjustment devices allowing settings to be restored. Set and lock memory stops.
B. Mark on the Drawings the locations where traverse and other critical measurements were taken and cross reference the location in the final report.
3.04 AIR SYSTEM PROCEDURE
A. Adjust air handling and distribution systems to provide required or design supply, return, and exhaust air quantities.
B. Make air quantity measurements in ducts by Pitot tube traverse of entire cross sectional area of duct.
C. Measure air quantities at air inlets and outlets.
D. Adjust distribution system to obtain uniform space temperatures free from objectionable drafts and noise.
E. Use volume control devices to regulate air quantities only to extend that adjustments do not create objectionable air motion or sound levels. Effect volume control by duct internal devices such as dampers and splitters. Do not use diffuser, grille or register integral dampers for balancing adjustments unless the plans do not indicate duct mounted devices.
F. Vary total system air quantities by adjustment of fan speeds. Provide drive changes required at no additional expense to the Owner. Vary branch air quantities by damper regulation.
G. Measure static air pressure conditions on air supply units, including filter and coil pressure drops, and total pressure across the fan. Make allowances for 50 percent loading of filters.
H. Adjust outside air automatic dampers, outside air, return air, and exhaust dampers for design conditions in all operating modes as indicated in the sequence of control.
I. Measure temperature conditions across outside air, return air, and exhaust dampers to check leakage.
J. Where modulating dampers are provided, take measurements and balance at extreme conditions and at all intermediate operating conditions specified in the sequence of control. Balance variable volume systems at maximum air flow rate, full cooling, and at minimum air flow rate, full heating.
3.05 SCOPE
A. Equipment Requiring Testing, Adjusting, and Balancing (if present on the project):
1. HVAC Pumps; Boilers; All Air Handling Equipment; All Packaged Heating and/or Cooling Equipment; All Coil; All Heat Exchangers; Terminal Heat Transfer Units; Air Terminal Units; Air Inlets and Outlets
3.06 MINIMUM DATA TO BE REPORTED
A. Report (as applicable to the project):
1. Summary Comments:
a. Design versus final performance
b. Notable characteristics of system
c. Summary of outdoor and exhaust flows to indicate amount of building pressurization
d. Nomenclature used throughout report and test conditions.
B. Electric Motors and drives:
1. Manufacturer; Model/Frame; HP/BHP; Phase, voltage, amperage; nameplate, actual, no load; RPM; Service factor; Sheave Make/Size/Bore.
2. V-Belt Drives: Identification/location; Required driven RPM; Driven sheave, diameter and RPM; Belt, size and quantity;
C. Cooling and Heating Coils:
1. Identification/number; Manufacturer
2. Air flow, design and actual
3. Air pressure drop, design and actual
4. Entering and leaving air DB and WB temperature, design and actual
5. Water flow, design and actual (if applicable)
6. Water pressure drop, design and actual (if applicable)
7. Entering and leaving water temperature, design and actual (if applicable)
D. Air Moving Equipment:
1. Manufacturer; Model number; Serial number; Arrangement/Class/Discharge
2. Air flow, specified and actual
3. Inlet; Discharge; Total static pressure (total external), specified and actual
E. Air Distribution Tests:
1. Air terminal number
2. Room number/location
3. Terminal type
4. Terminal size
5. Area factor
6. Design velocity
7. Design air flow
8. Test (final) velocity
9. Test (final) air flow
10. Percent of design air flow

END OF SECTION

## SECTION 230713 – DUCT INSULATION

PART 1 GENERAL

1.01 SECTION INCLUDES
A. Duct insulation.
B. Duct liner.
C. Insulation jackets.
D. Supply, return or exhaust ducts in ceiling spaces.
E. Supply, return or exhaust ducts in interior unconditioned areas.
F. Supply, return or exhaust ducts in exposed locations.
1.02 FIELD CONDITIONS
A. Maintain ambient temperatures and conditions required by manufacturers of adhesives, mastics, and insulation cements.
B. Maintain temperature during and after installation for minimum period of 24 hours.

PART 2 PRODUCTS

2.01 REQUIREMENTS FOR ALL PRODUCTS OF THIS SECTION
A. Surface Burning Characteristics: Flame spread/Smoke developed index of 25/50, maximum, when tested in accordance with ASTM E 84, NFPA 255, or UL 723.
B. Manufacturer: Knauf Fiber Glass; Johns Manville Corporation; Owens Corning Corp.; CertainTeed Corporation.
2.02 GLASS FIBER, FLEXIBLE
A. Insulation: ASTM C 553; flexible, noncombustible blanket.
1. 'K' value: 0.31 at 75 degrees F, when tested in accordance with ASTM C 518.
2. Maximum Service Temperature: 450 degrees F.
3. Maximum Water Vapor Sorption: 5.0 percent by weight.
B. Vapor Barrier Jacket:
1. Kraft paper with glass fiber yarn and bonded to aluminized film.
2. Moisture Vapor Permeability: 0.029 ng/Pa s m (0.02 perm inch), when tested in accordance with ASTM E 96/E 96M.
3. Secure with pressure sensitive tape.
C. Vapor Barrier Tape:
1. Kraft paper reinforced with glass fiber yarn and bonded to aluminized film, with pressure sensitive rubber based adhesive.
D. Outdoor Vapor Barrier Mastic:
1. Vinyl emulsion type acrylic or mastic, compatible with insulation, black color.
E. Tie Wire: Annealed steel, 16 gage.
2.03 DUCT LINER
A. Insulation: Incombustible glass fiber complying with ASTM C 1071; flexible blanket, rigid board, and preformed round liner board; impregnated surface and edges coated with acrylic polymer shown to be fungus and bacteria resistant by testing to ASTM G 21.
1. Apparent Thermal Conductivity: Maximum of 0.31 at 75 degrees F.
2. Service Temperature: Up to 250 degrees F.
3. Rated Velocity on Coated Air Side for Air Erosion: 5,000 fpm, minimum.
4. Minimum Noise Reduction Coefficients:
a. 1/2 inch Thickness: 0.30.
b. 1 inch Thickness: 0.45.
c. 1-1/2 inches Thickness: 0.60.
d. 2 inch Thickness: 0.70.
B. Adhesive: Waterproof, fire-retardant type.
C. Liner Fasteners: Galvanized steel, self-adhesive pad or impact applied with integral, or press-on head.

PART 3 EXECUTION

3.01 INSTALLATION
A. Install in accordance with manufacturer's instructions and NAIMA National Insulation Standards.
B. Insulated ducts conveying air below ambient temperature:
1. Provide insulation with vapor barrier jackets.
2. Finish with tape and vapor barrier jacket.
3. Continue insulation through walls, sleeves, hangers, and other duct penetrations.
4. Insulate entire system including fittings, joints, flanges, fire dampers, flexible connections, and expansion joints.
C. Insulated ducts conveying air above ambient temperature:
1. Provide with or without standard vapor barrier jacket.
2. Insulate fittings and joints. Where service access is required, bevel and seal ends of insulation.
D. External Duct Insulation Application:
1. Secure insulation with vapor barrier with wires and seal jacket joints with vapor barrier adhesive or tape to match jacket.
2. Secure insulation without vapor barrier with staples, tape, or wires.
3. Install without sag on underside of duct. Use adhesive or mechanical fasteners where necessary to prevent sagging. Lift duct off trapeze hangers and insert spacers.
4. Seal vapor barrier penetrations by mechanical fasteners with vapor barrier adhesive.
5. Stop and point insulation around access doors and damper operators to allow operation without disturbing wrapping.
E. Duct and Plenum Liner Application:
1. Adhere insulation with adhesive for 90 percent coverage.
2. Secure insulation with mechanical liner fasteners. Refer to SMACNA HVAC Duct Construction Standards – Metal and Flexible for spacing.
3. Seal and smooth joints. Seal and coat transverse joints.
4. Seal liner surface penetrations with adhesive.
5. Duct dimensions indicated are net inside dimensions required for air flow. Increase duct size to allow for insulation thickness.
3.02 SCHEDULES
A. The Contractor may use any of the following insulating materials, at his option, provided the selected material meets with the approval of all State, local authorities and utility company requirements. Verification of compliance of the selected insulating material and thickness with all State and local codes and utility company requirements is the sole responsibility of the installing Contractor.
B. Supply air ducts in ceiling spaces:
1. Flexible Glass Fiber Duct Insulation: 1-1/2 inches thick.
2. Flexible Glass Fiber Duct Liner Insulation: 1 inches thick.
C. Supply, return or exhaust air ducts in crawl spaces, attics or other unconditioned areas:
1. Flexible Glass Fiber Duct Insulation: 3 inches thick.
D. Supply air ducts exposed in finished areas:
1. Flexible Glass Fiber Duct Liner Insulation: 1 inches thick.
E. Return or exhaust air ducts exposed in finished areas: None.

END OF SECTION

## SECTION 230713.13 – GREASE DUCT FIREPROOFING

PART 1 GENERAL

1.01 SECTION INCLUDES
A. Fire resistant duct wrap for kitchen hood exhaust ventilation ducts (grease ducts).
B. Firestopping at duct penetrations through fire rated walls and floors.

PART 2 PRODUCTS

2.01 MANUFACTURERS
A. Acceptable Manufacturer: 3M Fire Protection Products, Inc.; Unifrax FyreWrap; Morgan Thermal Ceramics.
2.02 MATERIALS
A. Grease Duct Fireproofing: Material applied directly to metal ducts and achieving two-hour fire rated separation when tested in accordance with UL 2221 or ASTM E2336 by independent testing agency.
1. Surface Burning Characteristics: Flame spread index of 0 and smoke developed index of 0, when tested in accordance with ASTM E 84, both blanket and foil.
2. Combustibility: Non-combustible, when tested in accordance with ASTM E 136.
3. Flexibility: Capable of being formed around corners and shapes by hand.
4. Surface: Foil or other damage resistant surface; fiber not exposed after installation.
5. Accommodation For Duct Access Doors and Panels: Capable of being installed to achieve fire rating without impeding access.
6. Acceptable Product: 3M Fire Barrier Duct Wrap; fire resistant inorganic blanket encapsulated with scrim-reinforced foil facing.
B. Fasteners: Non-combustible; use one or both of the following to attach fireproofing to ducts:
1. Banding: Steel or stainless steel, 1/2 inch wide, minimum, and 0.015 inch thick, minimum; with steel banding clips.
2. Insulation Pins: Copper-coated steel impalement pins, minimum 12 gage, for welded attachment, with galvanized steel self-locking washers, 1-1/2 inch square or diameter; or equivalent sized cup-head pins.
C. Access Panel Hardware: Galvanized threaded rods, sleeves, washers, and wing nuts as specified in manufacturer's instructions.
D. Tape: Aluminum foil tape for sealing exposed fiber edges and repairing tears in facing.
E. Firestopping: Material tested in conjunction with fireproofing, in accordance with ASTM E 814, to achieve fire rated penetration seal at duct penetrations through fire rated assemblies.
1. Fire Rating: Same or greater than rating of penetrated assembly.
2. Acceptable Products: 3M Fire Barrier 1000 N/S, 1003 S/L, and 2000+ Silicone Sealants, as required by tested assembly.

PART 3 EXECUTION

3.01 EXAMINATION
A. Do not begin installation until substrates have been properly prepared.
B. If substrate preparation is the responsibility of another installer, notify Engineer of unsatisfactory preparation before proceeding.
3.02 PREPARATION
A. Clean surfaces thoroughly prior to installation.
B. Prepare surfaces using the methods recommended by the manufacturer for achieving the best result for the substrate under the project conditions.
3.03 INSTALLATION
A. Install in strict accordance with manufacturer's instructions and as indicated on the Drawings.
B. Perform all required regulatory duct leakage and weld tests in the presence of the code official, including but not limited to light tests and smoke tests, to demonstrate the integrity of the duct construction prior to the installation of any insulation that prevents visual inspection of the ductwork on all sides.
C. Install fireproofing on entire surface of ducts indicated, except where Contract Documents explicitly indicate 3-sided or 2-sided installation.
D. At penetrations of ducts through fire rated assemblies (walls, floors, roofs), extend fireproofing through the opening and seal annular space between fireproofing and edge of opening with firestopping.
E. Fasten fireproofing to ducts using either banding or insulation pins welded directly to surface of duct; do not use adhesives.
F. Install fireproofing on supports and hangers unless hanger rods are at least 3/8 inch in diameter, spaced not more than 60 inches on center along length of duct, and horizontal supports are at least 2 by 2 by 1/4 inch steel angle or equivalent SMACNA support system.
G. Access Panels: Do not block access; install fireproofing so that panel can be removed and reinstalled without damaging fireproofing.
H. Seal all cut edges and ends and repair tears in facing using aluminum foil tape.

END OF SECTION

## SECTION 230719 – HVAC PIPING INSULATION

PART 1 GENERAL

1.01 SECTION INCLUDES
A. Cooling condensate drain piping insulation.
B. Refrigerant piping insulation.

PART 2 PRODUCTS

2.01 REQUIREMENTS FOR ALL PRODUCTS OF THIS SECTION
A. Surface Burning Characteristics: Flame spread/Smoke developed index of 25/50, maximum, when tested in accordance with ASTM E 84, NFPA 255, or UL 723.
B. The Contractor may use any of the following insulating/jacketing materials, at his option, provided the selected material meets with the approval of all State, local authorities and utility company requirements. Verification of compliance of the selected insulating/jacketing material is the sole responsibility of the installing Contractor.
2.02 GLASS FIBER
A. Manufacturers: Knauf Insulation; Johns Manville Corporation; Owens Corning Corp.; CertainTeed Corporation.
B. Insulation: ASTM C 547 and ASTM C 795; rigid molded, noncombustible.
1. 'K' value: ASTM C 177, 0.24 at 75 degrees F.
2. Maximum service temperature: 850 degrees F.
3. Maximum moisture absorption: 0.2 percent by volume.
C. Insulation: ASTM C 547 and ASTM C 795; semi-rigid, noncombustible, end grain adhered to jacket.
1. 'K' value: ASTM C 177, 0.24 at 75 degrees F.
2. Maximum service temperature: 650 degrees F.
3. Maximum moisture absorption: 0.2 percent by volume.
D. Vapor Barrier Jacket: White kraft paper with glass fiber yarn, bonded to aluminized film; moisture vapor transmission when tested in accordance with ASTM E 96/E 96M of 0.02 perm-inches.
E. Vapor Barrier Lap Adhesive: Compatible with insulation.
F. Insulating Cement/Mastic: ASTM C 195; hydraulic setting on mineral wool.
G. Fibrous Glass Fabric:
1. Cloth: Untreated; 9 oz/sq yd weight.
2. Blanket: 1.0 lb/cu ft density.
3. Weave: 5x5.
H. Indoor Vapor Barrier Finish:
1. Cloth: Untreated; 9 oz/sq yd weight.
2. Vinyl emulsion type acrylic, compatible with insulation, black color.
I. Insulating Cement: ASTM C 449/C 449M.
2.03 FLEXIBLE ELASTOMERIC CELLULAR INSULATION
A. Manufacturer: Armacell International.
B. Insulation: Preformed flexible elastomeric cellular rubber insulation complying with ASTM C 534 Grade 3; use molded tubular material wherever possible.
1. Minimum Service Temperature: -40 degrees F.
2. Maximum Service Temperature: 220 degrees F.
3. Connection: Waterproof vapor barrier adhesive.
C. Elastomeric Foam Adhesive: Air dried, contact adhesive, compatible with insulation.
2.04 JACKETS
A. PVC Plastic.
1. Manufacturers: Knauf Fiber Glass; Johns Manville Corporation; Owens Corning Corp.; CertainTeed Corporation.
2. Jacket: One piece molded type fitting covers and sheet material, off-white color.
a. Minimum Service Temperature: 0 degrees F.
b. Maximum Service Temperature: 150 degrees F.
c. Moisture Vapor Permeability: 0.002 perm inch, maximum, when tested in accordance with ASTM E 96/E 96M.
d. Thickness: 10 mil.
e. Connections: Brush on welding adhesive.
3. Covering Adhesive Mastic: Compatible with insulation.
B. ABS Plastic:
1. Jacket: One piece molded type fitting covers and sheet material, off-white color.
a. Minimum Service Temperature: -40 degrees F.
b. Maximum Service Temperature of 180 degrees F.
c. Moisture Vapor Permeability: 0.012 perm inch, when tested in accordance with ASTM E 96/E 96M.
d. Thickness: 30 mil.
e. Connections: Brush on welding adhesive.

PART 3 EXECUTION

3.01 INSTALLATION
A. Install in accordance with manufacturer's instructions.
B. Install in accordance with NAIMA National Insulation Standards.
C. Inserts and Shields:
1. Application: Piping 2 inches diameter or larger.
2. Shields: Galvanized steel between pipe hangers or pipe hanger rolls and inserts.
3. Insert location: Between support shield and piping and under the finish jacket.
4. Insert configuration: Minimum 6 inches long, of same thickness and contour as adjoining insulation; may be factory fabricated.
5. Insert material: Hydrous calcium silicate insulation or other heavy density insulating material suitable for the planned temperature range.
D. Continue insulation through walls, sleeves, pipe hangers, and other pipe penetrations. Finish at supports, protrusions, and interruptions.
E. Exposed Piping: Locate insulation and cover seams in least visible locations.
3.02 SCHEDULE
A. Cooling Systems:
1. Cold Condensate Drains:
a. Glass Fiber Insulation:
1. Pipe Size Range: All Sizes.
a. Thickness: 1/2 inch.
b. Flexible Elastomeric Cellular Foam Insulation:
1. Pipe Size Range: All Sizes.
a. Thickness: 1/2 inch.
B. Refrigerant Suction:
a. Glass Fiber Insulation:
1. Pipe Size Range: All Sizes.
a. Thickness: 3/4 inch.
b. Flexible Elastomeric Cellular Foam Insulation:
1. Pipe Size Range: All Sizes.
a. Thickness: 3/4 inch.
C. Refrigerant Hot Gas:
a. Glass Fiber Insulation:
1. Pipe Size Range: All Sizes.
a. Thickness: 1/2 inch.
b. Flexible Elastomeric Cellular Foam Insulation:
1. Pipe Size Range: All Sizes.
a. Thickness: 1/2 inch.

END OF SECTION

## SECTION 232300 – REFRIGERANT PIPING

PART 1 GENERAL

1.01 SECTION INCLUDES
A. Piping.
B. Refrigerant.
C. Moisture and liquid indicators.
D. Filter-driers.
E. Expansion valves.
1.02 SYSTEM DESCRIPTION
A. Where more than one piping system material is specified ensure system components are compatible and joined to ensure the integrity of the system is not jeopardized. Provide necessary joining fittings. Ensure flanges, union, and couplings for servicing are consistently provided.
B. Provide pipe hangers and supports in accordance with ASME B31.5 unless indicated otherwise.
C. Liquid Indicators:
1. Use line size liquid indicators in main liquid line leaving condenser.
2. If receiver is provided, install in liquid line leaving receiver.
3. Use line size on leaving side of liquid solenoid valves.
D. Refrigerant Charging (Packed Angle) Valve: Use in liquid line between receiver shut-off valve and expansion valve.
E. Filter-Driers:
1. Use a filter-drier immediately ahead of liquid-line controls, such as thermostatic expansion valves, solenoid valves, and moisture indicators.
2. Use a filter-drier on suction line just ahead of compressor.
1.03 REGULATORY REQUIREMENTS
A. Conform to ASME B31.9 for installation of piping system.
B. Welding Materials and Procedures: Conform to ASME (BPV IX) and applicable state labor regulations.
C. Welders Certification: In accordance with ASME (BPV IX).

Bergmeyer
BOS – 51 Sleeper St. 6th Floor Boston, MA 02210 617.542.1025
LA – 800 South Figueroa St. Suite 1080 Los Angeles, CA 90017 212.337.1090
www.bergmeyer.com

CONSULTANTS:
Schnackel engineers
800-581-0963
www.schnackel.com
SE JOB#: 200383

SEAL/ SIGNATURE:
STATE OF MISSOURI
GREGORY ROY SCHNACKEL
NUMBER E-026570
REGISTERED PROFESSIONAL ENGINEER
Date: 03/05/21
COA #: E-2009006642

| NO. | BY | DATE | DESCRIPTION |
|---|---|---|---|
| 1 | | 2021-03-09 | ADDENDUM #1 |
| | | 2021-01-11 | PERMIT/BID SET |
| | | 2020-12-21 | 75% SET |
| | | 2020-10-12 | DD SET |

SHAKE SHACK

SHAKE SHACK - LEE'S SUMMIT MO

LEE'S SUMMIT
MISSOURI
SHACK #1348

PERMIT/BID SET

MECHANICAL SPECIFICATIONS

DRAWN BY: RAS
CHECKED BY: GRS
JOB NO: 20068.00

M590

PART 2 PRODUCTS

2.01 PIPING
A. Copper Tube: ASTM B 280, H58 hard drawn or 060 soft annealed.
1. Fittings: ASME B16.22 wrought copper.
2. Joints: Braze, AWS A5.8 BCuP silver/phosphorus/copper alloy.
B. Copper Tube to 7/8 inch OD: ASTM B 88 (ASTM B 88M), Type K (A), annealed.
1. Fittings: ASME B16.26 cast copper.
2. Joints: Flared.
C. Pipe Supports and Anchors:
1. Conform to ASME B31.5, ASTM F 708, MSS SP-58, MSS SP-69, and MSS SP-89.

2.02 REFRIGERANT
A. Provide refrigerant as specified by the manufacturer of the refrigeration equipment.

2.03 MOISTURE AND LIQUID INDICATORS
A. Manufacturers:
1. Henry Technologies; Parker Hannifin/Refrigeration and Air Conditioning; Sporlan Valve Company.
B. Indicators: Single port type, UL listed, with copper or brass body, flared or solder ends, sight glass, color coded paper moisture indicator with removable element cartridge and plastic cap; for maximum temperature of 200 degrees F and maximum working pressure of 500 psi.

2.04 FILTER-DRIERS
A. Manufacturers:
1. Flow Controls Division of Emerson Electric; Parker Hannifin/Refrigeration and Air Conditioning; Sporlan Valve Company.
B. Performance:
1. Flow Capacity – Liquid Line: As required by capacities indicated on the Drawings, minimum, rated in accordance with ARI 710.
2. Flow Capacity – Suction Line: As required by capacities indicated on the Drawings, minimum, rated in accordance with ARI 730.
3. Pressure Drop: 2 psi, maximum, when operating at full connected evaporator capacity.
4. Design Working Pressure: 350 psi, minimum.
C. Cores: Molded or loose-fill molecular sieve desiccant compatible with refrigerant, activated alumina, activated charcoal, and filtration to 40 microns, with secondary filtration to 20 microns; of construction that will not pass into refrigerant lines.
D. Construction: UL listed.
1. Replaceable Core Type: Steel shell with removable cap.
2. Sealed Type: Copper shell.
3. Connections: As specified for applicable pipe type.

2.05 EXPANSION VALVES
A. Manufacturers:
1. Flow Controls Division of Emerson Electric; Parker Hannifin/Refrigeration and Air Conditioning; Sporlan Valve Company.
B. Angle or Straight Through Type: ARI 750; design suitable for refrigerant, brass body, internal or external equalizer, bleed hole, adjustable superheat setting, replaceable inlet strainer, with non-replaceable capillary tube and remote sensing bulb.
C. Selection: Evaluate refrigerant pressure drop through system to determine available pressure drop across valve. Select valve for maximum load at design operating pressure and minimum 10 degrees F superheat. Select to avoid being undersized at full load and excessively oversized at part load.

PART 3 EXECUTION

3.01 INSTALLATION
A. Install refrigeration specialties in accordance with manufacturer's instructions.
B. All roofing penetrations shall be flashed and weather sealed by the roofing manufacturer's authorized roofing contractor at this Contractor's expense. This Contractor shall contract with the factory authorized roofing contractor for the specific roofing system applicable to this Project. The use of an unauthorized roofing contractor may result in removal and replacement of the penetration systems at this Contractor's expense.
C. Follow ASHRAE Std 15 procedures for charging and purging of systems and for disposal of refrigerant.
D. Fully charge completed system with refrigerant after testing.

3.02 FIELD QUALITY CONTROL
A. Test refrigeration system in accordance with ASME B31.5.
B. Hydrostatic test shall be performed on piping system. Provide test report to engineer and owner.

3.03 IDENTIFICATION
A. Provide manufacturer's standard pre-printed, semi-rigid snap-on or permanent adhesive, pressure-sensitive vinyl pipe markers. Color code pipe markers to comply with ANSI A13.1. Install pipe markers on each HVAC piping system and include arrows to show normal direction of flow. Locate pipe markers and color bands wherever piping is exposed to view in occupied spaces, machine rooms, accessible maintenance spaces (shafts, tunnels, plenums) and exterior non-concealed locations. Provide manufacturer's standard laminated plastic, color coded equipment markers. Conform to the following color code: Green for Cooling; Yellow for Heating; Yellow/Green for combination Cooling and Heating; Brown for Energy Reclamation; Blue for other equipment types. Conform to ANSI A13.1 for Hazardous Equipment. Provide stenciled signs for equipment identification at Contractor's option or where distance of required identification requires lettering larger than 1 inch height. Stencil paint shall be exterior type, oil-based, alkyd enamel, minimum 1-1/4 inch height or greater as required for long distance identification, white or black color for best contrast. Provide duct markers or provide stenciled signs and arrows indicating ductwork service and flow direction in black or white lettering for best contrast with duct or insulation color. Locate markers maximum 50 feet along each duct side and within 5 feet of all control and balancing dampers or branch ducts more than 25 feet length and within 5 feet on each side of wall, floor, and ceiling penetrations. Provide additional markers in congested areas or at multiple duct runs as required for clarity.

END OF SECTION

## SECTION 233100 – HVAC DUCTS AND CASINGS

PART 1 GENERAL

1.01 SECTION INCLUDES
A. Metal ductwork.
B. Nonmetal ductwork.
C. Round spiral ductwork
D. Double wall insulated round ductwork.
E. Kitchen hood ductwork, Type 1 grease hoods.
F. Duct cleaning.

1.02 PERFORMANCE REQUIREMENTS
A. No variation of duct configuration or sizes permitted except by written permission. Size round ducts installed in place of rectangular ducts in accordance with ASHRAE table of equivalent rectangular and round ducts, only after approval of the Engineer. Sizes shown on design drawings are air dimensions. Contractor may increase duct size without engineer approval, provided all ceiling and shaft clearances can be maintained. Additional charges for increased duct size will not be accepted by the owner.
B. Report all conflicts with structure or other obstructions, prior to fabrication of any ductwork. Suitable adjustments in the sizes of ducts shall be accommodated without any additional expense to the Owner.

1.03 SUBMITTALS
A. Shop Drawings: Indicate duct fittings, particulars such as gages, sizes, welds, and configuration prior to start of work for all systems. No ductwork shall be fabricated until engineer approved shop drawings have been received by the Contractor. Identify on ductwork shop drawings any deviations in sizes or shapes made necessary by the obstructions of other trades.
B. Test Reports: Indicate pressure tests performed. Include date, section tested, test pressure, and leakage rate, following SMACNA (LEAK) – HVAC Air Duct Leakage Test Manual.

1.04 REGULATORY REQUIREMENTS
A. Construct ductwork to NFPA 90A, NFPA 90B, and NFPA 96 standards.
B. Code or utility company requirements shall supersede any conflicting requirements of this Section.

1.05 FIELD CONDITIONS
A. Do not install duct sealants when temperatures are less than those recommended by sealant manufacturers.
B. Maintain temperatures within acceptable range during and after installation of duct sealants.

PART 2 PRODUCTS

2.01 MATERIALS
A. Galvanized Steel Ducts: Hot-dipped galvanized steel sheet, ASTM A 653/A 653M FS Type B, with G90/Z275 coating.
B. Steel Ducts: ASTM A 1008/A 1008M, Designation CS, cold-rolled commercial steel.
C. Aluminum Ducts: ASTM B 209 (ASTM B 209M); aluminum sheet, alloy 3003-H14. Aluminum Connectors and Bar Stock: Alloy 6061-T651 or of equivalent strength.
D. Insulated Flexible Ducts:
1. The Contractor may use any of the following ductwork materials, at his option, provided the selected material meets with the approval of all State, local authorities and utility company requirements. Verification of compliance of the selected ductwork material is the sole responsibility of the installing Contractor.
2. Two ply vinyl film supported by helically wound spring steel wire; fiberglass insulation; aluminized vapor barrier film.
a. Pressure Rating: 10 inches WG positive and 1.0 inches WG negative.
b. Maximum Velocity: 4000 fpm.
c. Temperature Range: -10 degrees F to 160 degrees F.
d. Minimum R-Value: 4.2 or greater as required by the applicable energy codes.
3. Black polymer film supported by helically wound spring steel wire; fiberglass insulation; aluminized vapor barrier film.
a. Pressure Rating: 4 inches WG positive and 0.5 inches WG negative.
b. Maximum Velocity: 4000 fpm.
c. Temperature Range: -20 degrees F to 175 degrees F.
d. Minimum R-Value: 4.2 or greater as required by the applicable energy codes.
4. Multiple layers of aluminum laminate supported by helically wound spring steel wire; fiberglass insulation; aluminized vapor barrier film.
a. Pressure Rating: 10 inches WG positive and 1.0 inches negative.
b. Maximum Velocity: 4000 fpm.
c. Temperature Range: -20 degrees F to 210 degrees F.
d. Minimum R-Value: 4.2 or greater as required by the applicable energy codes.
5. UL 181, Class 1, aluminum laminate and polyester film with latex adhesive supported by helically wound spring steel wire; fiberglass insulation; aluminized vapor barrier film.
a. Pressure Rating: 10 inches WG positive and 1.0 inches WG negative.
b. Maximum Velocity: 4000 fpm.
c. Temperature Range: -20 degrees F to 210 degrees F.
d. Minimum R-Value: 4.2 or greater as required by the applicable energy codes.
6. UL 181, Class 0, interlocking spiral of aluminum foil; fiberglass insulation; aluminized vapor barrier film.
a. Pressure Rating: 8 inches WG positive or negative.
b. Maximum Velocity: 5000 fpm.
c. Temperature Range: -20 degrees F to 250 degrees F.
d. Minimum R-Value: 4.2 or greater as required by the applicable energy codes.
E. Joint Sealers and Sealants: Non-hardening, water resistant, mildew and mold resistant.
1. Type: Heavy mastic or liquid used alone or with tape, suitable for joint configuration and compatible with substrates, and recommended by manufacturer for pressure class of ducts.
2. VOC Content: Not more than 250 g/L, excluding water.
3. Surface Burning Characteristics: Flame spread of zero, smoke developed of zero, when tested in accordance with ASTM E 84.
4. For Use With Flexible Ducts: UL labeled.
5. Ductwork Exposed to the Weather: Hard cast VersaGrip 102, (VG-102), UL 181-AM compliant duct joint sealer, as manufactured by Carlisle, with fiberglass scrim tape reinforcement on all seams and joints, lateral and longitudinal.
F. Hanger Rod: ASTM A 36/A 36M; steel; threaded both ends, threaded one end, or continuously threaded.

2.02 DUCTWORK FABRICATION
A. Fabricate, support and seal in accordance with SMACNA HVAC Duct Construction Standards – Metal and Flexible, and as indicated. Provide duct material, gages, reinforcing, and sealing for operating pressures indicated.
B. Construct T's, bends, and elbows with radius of not less than 1-1/2 times width of duct on centerline. Where not possible and where rectangular elbows must be used, provide turning vanes. Where acoustical lining is indicated, provide turning vanes of perforated metal with glass fiber insulation.
C. Increase duct sizes gradually, not exceeding 15 degrees divergence wherever possible; maximum 30 degrees divergence upstream of equipment and 45 degrees convergence downstream.
D. Fabricate continuously welded round and oval duct fittings two gages heavier than duct gages indicated in SMACNA Standard. Joints shall be minimum 4 inch cemented slip joint, brazed or electric welded. Prime coat welded joints.
E. Provide standard 45 degree lateral wye takeoffs unless otherwise indicated where 90 degree conical tee connections may be used.
F. Where ducts are connected to exterior wall louvers and duct outlet is smaller than louver frame, provide blank-out panels sealing louver area around duct. Use same material as duct, painted black on exterior side; seal to louver frame and duct.

2.03 DUCT MANUFACTURERS
A. Metal-Fab, Inc.; SEMCO Incorporated; United McGill Corporation.

2.04 MANUFACTURED METAL DUCTWORK AND FITTINGS
A. Manufacture in accordance with SMACNA HVAC Duct Construction Standards – Metal and Flexible, and as indicated. Provide duct material, gages, reinforcing, and sealing for operating pressures indicated.
B. Round Spiral Ducts: Machine made from round spiral lockseam duct with light reinforcing corrugations; fittings manufactured of at least two gages heavier metal than duct.
C. Double Wall Insulated Round Ducts: Round spiral lockseam duct with galvanized steel outer wall, 1 inch thick fiberglass insulation, perforated galvanized steel inner wall; fitting with solid inner wall.
D. Transverse Duct Connection System: SMACNA "E" rated rigidly class connection, interlocking angle and duct edge connection system with sealant, gasket, cleats, and corner clips.

2.05 KITCHEN HOOD EXHAUST DUCTWORK, TYPE 1
A. Fabricate in accordance with SMACNA HVAC Duct Construction Standards – Metal and Flexible, and NFPA 96.
B. Construct of 16 gage carbon steel or 18 gage stainless steel, using continuous external welded joints.

PART 3 EXECUTION

3.01 EXAMINATION
A. Examine drawings for the Architectural, Structural, Electrical and all other trades prior to preparation of ductwork shop drawings and prior to the fabrication of any ductwork.
B. Resolve any conflicts encountered with the Engineer prior to fabrication.
C. Identify on ductwork shop drawings any deviations in sizes or shapes made necessary by the obstructions of other trades.

3.02 INSTALLATION
A. Install in accordance with manufacturer's instructions.
B. Duct sizes indicated are inside clear dimensions. For lined ducts, maintain sizes inside lining.
C. Install and seal metal and flexible ducts in accordance with SMACNA HVAC Duct Construction Standards – Metal and Flexible.
D. Provide openings in ductwork where required to accommodate thermometers and controllers. Provide pilot tube openings where required for testing of systems, complete with metal can with spring device or screw to ensure against air leakage. Where openings are provided in insulated ductwork, install insulation material inside a metal ring.
E. Locate ducts with sufficient space around equipment to allow normal operating and maintenance activities.
F. Use crimp joints with or without bead for joining round duct sizes 8 inch and smaller with crimp in direction of air flow.
G. Use double nuts and lock washers on threaded rod supports.
H. Connect flexible ducts to metal ducts with draw bands.
I. Support flexible duct runs every five feet in the horizontal direction to avoid dips and sags.
J. Connect terminal units to supply ducts with one foot maximum length of flexible duct. Do not use flexible duct to change direction.
K. Connect diffusers to low pressure ducts directly or with 5 feet maximum length of flexible duct held in place with strap or clamp. Longer duct lengths are acceptable if depicted on the design drawings and allowed per local code. A maximum of one 90 degree bend, or equivalent, will be allowed in flexible duct runs.
L. During construction provide temporary closures of metal or taped polyethylene on open ductwork to prevent construction dust from entering ductwork system.
M. All exposed ducts in finished areas must be completely free from all dents or imperfections in the galvanized coating and shall be sealed CAREFULLY AND NEATLY with duct sealer completely contained within the joint. Duct wrap will not be permitted in exposed locations. If round duct is indicated in exposed locations, it must be spiral. No exposed duct sealer, tape or longitudinal joints will be accepted in exposed finished areas. Line all exposed supply air ductwork.
N. Kitchen hood exhaust, Type 1: Use stainless steel for ductwork exposed to view and stainless steel or carbon steel for ducts where concealed.
O. For all hood systems, perform all required regulatory duct leakage and weld tests in the presence of the code official, including but not limited to light tests and smoke tests, to demonstrate the integrity of the duct construction prior to the installation of any insulation that prevents visual inspection of the ductwork on all sides.
P. Provide residue traps in kitchen hood exhaust ducts at base of vertical risers with provisions for clean out.
Q. All roofing penetrations shall be flashed and weather sealed by the roofing manufacturer's authorized roofing contractor at this Contractor's expense. This Contractor shall contract with the factory authorized roofing contractor for the specific roofing system applicable to this Project. The use of an unauthorized roofing contractor may result in removal and replacement of the penetration systems at this Contractor's expense.

3.03 CLEANING
A. Clean duct system and force air at high velocity through duct to remove accumulated dust or clean with high power vacuum machines. To obtain sufficient air, clean half the system at a time. Protect equipment which may be harmed by excessive dirt with temporary filters, or bypass during cleaning.

3.04 SCHEDULES
A. Ductwork Material:
B. The Contractor may use any of the following ductwork materials, at his option, provided the selected material meets with the approval of all State, local authorities and utility company requirements. Verification of compliance of the selected piping material is the sole responsibility of the installing Contractor.
1. Low Velocity Supply (Heating Systems): Galvanized Steel, Aluminum.
2. Low Velocity Supply (System with Cooling Coils): Galvanized Steel, Aluminum.
3. Return and Relief: Galvanized Steel, Aluminum.
4. General Exhaust: Galvanized Steel, Aluminum.
5. Outside Air Intake: Galvanized Steel.
6. Kitchen Hood Exhaust, Type 1: Carbon Steel, Stainless Steel, Constructed per NFPA 96.
C. Ductwork Pressure Class:
1. Low Velocity Supply (Heating Systems): Scheduled System ESP+0.25", round up to next higher pressure class.
2. Low Velocity Supply (Systems with Cooling): Scheduled System ESP +0.5", round up to next higher pressure class.
3. Return and Relief: 1 inch.
4. General Exhaust: Scheduled System ESP +1.0", round up to next higher pressure class.
5. Outside Air Intake: 1 inch.
6. Kitchen Hood Exhaust: See drawings for maximum fan static pressure plus 50% additional.

3.05 IDENTIFICATION
A. Provide manufacturer's standard pre-printed, semi-rigid snap-on or permanent adhesive, pressure-sensitive vinyl pipe markers. Color code pipe markers to comply with ANSI A13.1. Install pipe markers on each HVAC piping system and include arrows to show normal direction of flow. Locate pipe markers and color bands wherever piping is exposed to view in occupied spaces, machine rooms, accessible maintenance spaces (shafts, tunnels, plenums) and exterior non-concealed locations. Provide manufacturer's standard laminated plastic, color coded equipment markers. Conform to the following color code: Green for Cooling; Yellow for Heating; Yellow/Green for combination Cooling and Heating; Brown for Energy Reclamation; Blue for other equipment types. Conform to ANSI A13.1 for Hazardous Equipment. Provide stenciled signs for equipment identification at Contractor's option or where distance of required identification requires lettering larger than 1 inch height. Stencil paint shall be exterior type, oil-based, alkyd enamel, minimum 1-1/4 inch height or greater as required for long distance identification, white or black color for best contrast. Provide duct markers or provide stenciled signs and arrows indicating ductwork service and flow direction in black or white lettering for best contrast with duct or insulation color. Locate markers maximum 50 feet along each duct side and within 5 feet of all control and balancing dampers or branch ducts more than 25 feet length and within 5 feet on each side of wall, floor, and ceiling penetrations. Provide additional markers in congested areas or at multiple duct runs as required for clarity.

3.06 FIELD QUALITY CONTROL
A. Supply duct leakage test shall be performed. Provide test report to engineer and owner.

END OF SECTION

## SECTION 233300 – AIR DUCT ACCESSORIES

PART 1 GENERAL

1.01 SECTION INCLUDES
A. Air turning devices/extractors.
B. Volume control dampers.
C. Flexible duct connections.
D. Duct access doors.

PART 2 PRODUCTS

2.01 AIR TURNING DEVICES/EXTRACTORS
A. Manufacturers: Krueger; Ruskin Company; Titus.
B. Multi-blade device with blades aligned in short dimension; steel or aluminum construction; with individually adjustable blades, mounting straps.

2.02 VOLUME CONTROL DAMPERS
A. Manufacturers: Louvers & Dampers, Inc.; Nailor Industries Inc.; Ruskin Company; Prefco Inc.
B. Fabricate in accordance with SMACNA HVAC Duct Construction Standards – Metal and Flexible, and as indicated.
C. Single Blade Dampers: Fabricate for duct sizes up to 6 x 30 inch.
D. Multi-Blade Damper: Fabricate of opposed blade pattern with maximum blade sizes 8 x 72 inch. Assemble center and edge crimped blades in prime coated or galvanized channel frame with suitable hardware.
E. End Bearings: Except in round ducts 12 inches and smaller, provide end bearings. On multiple blade dampers, provide oil-impregnated nylon or sintered bronze bearings.
F. The contractor shall provide either a mechanical or electrical cable operated system wherever dampers are located in non-accessible areas.
1. Mechanical cable operator system shall be similar and equal to Young Regulator Company, "Bowden Cable Control" system including damper, flexible cable with casing and concealed ceiling regulator control.
2. Electrically operated damper control system shall be similar and equal to United Enertech Corporation, "Power Balance" system including motor operated damper, RJ-11 plenum rated cabling and flush ceiling or wall mounted RJ-11 jack in remote plate. Include one hand held battery pack operator pack to be delivered to the Owner upon completion of the balancing.

2.03 FLEXIBLE DUCT CONNECTIONS
A. Fabricate in accordance with SMACNA HVAC Duct Construction Standards – Metal and Flexible, and as indicated.
B. Flexible Duct Connections: Fabric crimped into metal edging strip.
1. Fabric: UL listed fire-retardant neoprene coated woven glass fiber fabric to NFPA 90A, minimum density 30 oz per sq yd.
a. Net Fabric Width: Approximately 2 inches wide.
2. Metal: 3 inches wide, 24 gage thick galvanized steel.

2.04 DUCT ACCESS DOORS
A. Manufacturers: Acudor Products Inc.; Nailor Industries Inc.; Ruskin Company; SEMCO Incorporated.
B. Fabricate in accordance with SMACNA HVAC Duct Construction Standards – Metal and Flexible, and as indicated.
C. Fabrication: Rigid and close-fitting of galvanized steel with sealing gaskets and quick fastening locking devices. For insulated ducts, install minimum 1 inch thick insulation with sheet metal cover.
1. Less Than 12 inches Square: Secure with sash locks.
2. Up to 18 inches Square: Provide two hinges and two sash locks.
D. Access doors with sheet metal screw fasteners are not acceptable.

PART 3 EXECUTION

3.01 INSTALLATION
A. Install accessories in accordance with manufacturer's instructions, NFPA 90A, and follow SMACNA HVAC Duct Construction Standards – Metal and Flexible. Duct construction and pressure class.
B. Provide duct access doors for inspection and cleaning before and after filters, coils, fans, automatic dampers, at fire dampers, combination fire and smoke dampers, and elsewhere as indicated. Provide minimum 8 x 8 inch size for hand access, 18 x 18 inch size for shoulder access, and as indicated. Provide 4 x 4 inch for balancing dampers only. Review locations prior to fabrication.
C. Locate all dampers and control elements in accessible areas wherever possible to avoid access doors. Provide ceiling access doors for access to all dampers and control elements located above inaccessible ceiling areas. Provide minimum 12 x 12 inch size for hand access, 18 x 18 inch size for shoulder access, and as indicated. Provide 4 x 4 inch for balancing dampers only. Review locations prior to fabrication.
D. Provide balancing dampers at points on supply, return, and exhaust systems where branches are taken from larger ducts as required for air balancing. Install minimum 2 duct widths from duct take-off.
E. Provide balancing dampers on duct take-off to diffusers, grilles, and registers, regardless of whether dampers are specified as part of the diffuser, grille, or register assembly. Do not locate dampers closer than 5 feet or 10 duct diameters from the air terminal device, whichever is greater.
F. At fans and motorized equipment associated with ducts, provide flexible duct connections immediately adjacent to the equipment.
G. At equipment supported by vibration isolators, provide flexible duct connections immediately adjacent to the equipment.

END OF SECTION

## SECTION 233423 – HVAC POWER VENTILATORS

PART 1 GENERAL

1.01 SECTION INCLUDES
A. Roof exhausters.
B. Kitchen range hood exhausters.

PART 2 PRODUCTS

2.01 MANUFACTURERS
A. Greenheck; Loren Cook Company; PennBarry; CaptiveAire.

2.02 POWER VENTILATORS – GENERAL
A. Performance Ratings: Determined in accordance with AMCA 210 and bearing the AMCA Certified Rating Seal.
B. Sound Ratings: AMCA 301, tested to AMCA 300, and bearing AMCA Certified Sound Rating Seal.
C. Fabrication: Conform to AMCA 99.
D. UL Compliance: UL listed and labeled, designed, manufactured, and tested as suitable for the purpose specified and indicated.

2.03 ROOF EXHAUSTERS AND VENTILATORS
A. Fan Unit: V-belt or direct driven as indicated, with spun aluminum housing; resilient mounted motor; 1/2 inch mesh, 0.62 inch thick aluminum wire birdscreen; square base to suit roof curb with continuous curb gaskets.
B. Roof Curb: 20 inch high above the finished roof surface (compensate for roof insulation thickness at fan location) self-flashing of galvanized steel or aluminum construction with continuously welded seams, built-in cant strips, insulation and curb bottom, and factory installed nailer strip.
C. Disconnect Switch: Factory wired, non-fusible, in housing for thermal overload protected motor.
D. Backdraft Damper: Motor actuated (or gravity damper if depicted on design drawings), aluminum multiple blade construction, felt edged with offset hinge pin, nylon bearings, blades linked, and line voltage motor drive, power open, spring return.
E. Sheaves: Cast iron or steel, dynamically balanced, bored to fit shafts and keyed; variable and adjustable pitch motor sheave selected so required rpm is obtained with sheaves set at mid-position; fan shaft with self-aligning pre-lubricated ball bearings.
F. Kitchen hood exhausters shall be upblast with grease tray, ventilated double wall curb and hinged curb adapter base for cleaning. Hood exhausters shall comply with requirements of NFPA 96.

PART 3 EXECUTION

3.01 INSTALLATION
A. Install in accordance with manufacturer's instructions.
B. Provide sheaves required for final air balance at no additional expense to the project.
C. Secure roof and wall exhausters with cadmium plated steel lag screws to roof curb or structure.
D. Extend ducts to roof and wall exhausters into roof curb or wall structure. Counterflash duct to roof or wall opening.
E. Install backdraft dampers (gravity or motorized as depicted on design drawings) on inlet to roof and wall exhausters.
F. All roofing penetrations shall be flashed and weather sealed by the roofing manufacturer's authorized roofing contractor at this Contractor's expense. This Contractor shall contract with the factory authorized roofing contractor for the specific roofing system applicable to this project. The use of an unauthorized roofing contractor may result in removal and replacement of the penetration systems at this Contractor's expense.

END OF SECTION

## SECTION 233700 – AIR OUTLETS AND INLETS

PART 1 GENERAL

1.01 SECTION INCLUDES
A. Rectangular ceiling diffusers.
B. Perforated face ceiling diffusers.
C. Grid core exhaust and return grilles.
D. Wall registers and grilles.

1.02 SUBMITTALS
A. Product Data: Provide data for equipment required for this project. Review outlets and inlets as to size, finish, and type of mounting prior to submission. Submit schedule of outlets and inlets showing type, size, location, application, accessories, and noise level.

1.03 QUALITY ASSURANCE
A. Test and rate air outlet and inlet performance in accordance with ASHRAE Std 70.
B. Test and rate louver performance in accordance with AMCA 500-L.
C. Code requirements shall supersede any conflicting requirements of this Section.

1.04 QUALIFICATIONS
A. Manufacturer Qualifications: Company specializing in manufacturing the type of products specified in this Section, with minimum five years of documented experience.

PART 2 PRODUCTS

2.01 MANUFACTURERS
A. Titus; Krueger; Price Industries; Nailor Industries Inc.; Hart & Cooley; Ruskin, Greenheck.

2.02 RECTANGULAR CEILING DIFFUSERS
A. Type: Square, adjustable pattern, stamped, multi-core, or architectural plaque diffuser to discharge air in 360 degree pattern with sectorizing baffles where indicated.
B. Frame: Inverted T-bar type. In plaster ceilings, provide plaster frame and ceiling frame. (To allow lift-out removal of the diffuser without removal of the plaster frame.)
C. Fabrication: Steel with baked enamel off-white finish.
D. Accessories: Opposed blade damper and multi-louvered equalizing grid with damper adjustable from diffuser face.

2.03 PERFORATED FACE CEILING DIFFUSERS
A. Type: Perforated face with fully adjustable pattern and removable face.
B. Frame: Inverted T-bar type. In plaster ceilings, provide plaster frame and ceiling frame. (To allow lift-out removal of the diffuser without removal of the plaster frame.)
C. Fabrication: Steel with steel frame and baked enamel off-white finish.
D. Accessories: Opposed blade damper and multi-louvered equalizing grid with damper adjustable from diffuser face.

2.04 GRID CORE EXHAUST AND RETURN GRILLES
A. Type: Fixed grilles of 1/2 x 1/2 x 1 inch louvers.
B. Fabrication: Aluminum with factory off-white enamel finish.
C. Frame: 1-1/4 inch margin with countersunk screw mounting.
D. Frame: Channel lay-in frame for suspended grid ceilings where face size exceeds 18 x 18 inch.
E. Damper (if specified on drawings): Integral, gang-operated, opposed blade type with removable key operator, operable from face.

2.05 WALL SUPPLY REGISTERS/GRILLES
A. Type: Streamlined and individually adjustable blades, 3/4 inch minimum depth, 3/4 inch maximum spacing with spring or other device to set blades, horizontal face, double deflection.
B. Frame: 1-1/4 inch margin with countersunk screw mounting and gasket.
C. Fabrication: Steel with 20 gage minimum frames and 22 gage minimum blades, steel and aluminum with 20 gage minimum frame, or aluminum extrusions, with factory off-white enamel finish.
D. Damper: Integral, gang-operated opposed blade type with removable key operator, operable from face.
E. Rough Service: Provide front pivoted or welded in place blades, securely fastened to be immobile.

2.06 WALL EXHAUST AND RETURN REGISTERS/GRILLES
A. Type: Streamlined blades, 3/4 inch minimum depth, 3/4 inch maximum spacing, with spring or other device to set blades, vertical face.
B. Frame: 1-1/4 inch margin with countersunk screw mounting.
C. Fabrication: Steel frames and blades, with factory off-white enamel finish.
D. Damper (if specified on drawings): Integral, gang-operated, opposed blade type with removable key operator, operable from face.
E. Rough Service: Provide front pivoted or welded in place blades, securely fastened to be immobile.

PART 3 EXECUTION

3.01 INSTALLATION
A. Install in accordance with manufacturer's instructions.
B. Check location of outlets and inlets and make necessary adjustments in position to conform with architectural features, symmetry, and lighting arrangement.
C. Install diffusers to ductwork with air tight connection.
D. Provide balancing dampers on duct take-off to diffusers, and grilles and registers, despite whether dampers are specified as part of the diffuser, or grille and register assembly.
E. Paint ductwork visible behind air outlets and inlets matte black.

END OF SECTION

## SECTION 237413 – PACKAGED OUTDOOR ROOF TOP UNITS – GAS FIRED

PART 1 GENERAL

1.01 SECTION INCLUDES
A. Packaged roof top units.
B. Thermostat controls.
C. Roof mounting curb and base.
D. Economizer.
E. Power exhaust.

PART 2 PRODUCTS

2.01 MANUFACTURERS
A. Carrier Corporation; Trane Inc.; Lennox Industries; York; AAON Incorporated.

2.02 AIR CONDITIONING UNITS
A. General: Roof mounted units having gas burner and electric refrigeration.
B. Description: Self-contained, packaged, factory assembled and prewired, consisting of cabinet and frame, supply fan, heat exchanger and burner, controls, air filters, refrigerant cooling coil and compressor, dry bulb economizer and power exhaust fan where indicated on the Drawings, condenser coil and condenser fan.
C. Electrical Characteristics: As scheduled on the Drawings.
D. Disconnect Switch: Factory mount disconnect switch on equipment.

2.03 FABRICATION
A. Cabinet: Steel with baked enamel finish, including access panels with screwdriver operated flush cam type fasteners or doors with piano hinges with locking handles. Structural members shall be minimum 18 gage, with access doors or panels of minimum 20 gage.
B. Insulation: one inch thick neoprene coated glass fiber with edges protected from erosion.
C. Heat Exchangers: Aluminized steel or stainless steel where indicated on the Drawings, of welded construction.
D. Supply Fan: Forward curved centrifugal type, resiliently mounted with V-belt drive, adjustable variable pitch motor pulley, and rubber isolated hinge mounted motor or direct drive as indicated. Isolate complete fan assembly.
1. Fans for units with a mechanical cooling capacity greater than or equal to 65,000 Btu/h shall have not fewer than two stages of fan control.
E. Air Filters: 2 inch thick disposable media in metal frames.
F. Roof Mounting Curb: Galvanized steel, channel frame, insulated with gaskets, nailer strips. Provide roof curb of adequate height to provide a unit mounting height of 12" or greater above the top of the roof surface with the curb mounted to the building structure. Roof curb height must compensate for the roof insulation thickness to meet this requirement.
G. Vibration Isolation Curb: Only when indicated on the Drawings.

2.04 BURNER
A. Gas Burner: Induced draft or forced draft type burner with adjustable combustion air supply, pressure regulator, gas valves, manual shut-off, intermittent spark or glow coil ignition, flame sensing device, and automatic 100 percent shut-off pilot.
B. Gas Burner Safety Controls: Energize ignition, limit time for establishment of flame, prevent opening of gas valve until pilot flame is proven, stop gas flow on ignition failure, energize blower motor, and after air flow proven and slight delay, allow gas valve to open.
C. High Limit Control: Temperature sensor with fixed stop at maximum permissible setting, de-energize burner on excessive bonnet temperature and energize burner when temperature drops to lower safe value.
D. Supply Fan Control: Temperature sensor sensing bonnet temperatures and independent of burner controls, with provisions for continuous fan operation.

2.05 EVAPORATOR COIL
A. Provide copper tube aluminum fin coil assembly with galvanized drain pan and connection.
B. Provide capillary tubes or thermostatic expansion valves for units of 6 tons capacity and less, and thermostatic expansion valves and alternate row circuiting for units 7.5 tons cooling capacity and larger.

2.06 COMPRESSOR
A. Provide hermetic or semi-hermetic compressors, 3600 rpm maximum, resiliently mounted with positive lubrication, crankcase heater, high and low pressure safety controls, motor overload protection, suction and discharge service valves and gage ports, and filter drier.
B. Five minute timed off circuit to delay compressor start.
C. Outdoor thermostat to energize compressor above 35 degrees F ambient.

2.07 CONDENSER COIL
A. Provide copper tube aluminum fin coil assembly with subcooling rows and coil guard.
B. Provide direct drive propeller fans, resiliently mounted with fan guard, motor overload protection, wired to operate with compressor.

2.08 MIXED AIR CASING
A. Dampers: Provide outside, return, and relief dampers with damper operator and control package to automatically vary outside air quantity. Outside air damper to fail to closed position. Relief dampers may be gravity balanced.
B. Gaskets: Provide tight fitting dampers with edge gaskets maximum leakage 5 percent at 2 inches pressure differential.
C. Damper Operator: 24 volt with gear train sealed in oil.
D. Damper Operator, Units 7.5 Ton Cooling Capacity and Larger: 24 volt with gear train sealed in oil with spring return on.
E. Mixed Air Controls: Maintain selected supply air temperature and return dampers to minimum position on call for heating and above 75 degrees F ambient, or when ambient air temperature exceeds return air temperature.

2.09 INTEGRATED ECONOMIZER:
A. Economizer shall be furnished and installed complete with outside air and relief dampers and controls.
B. Provide low-leakage, opposed blade dampers
1. Meet all leakage requirements of applicable energy code.
C. Economizer shall be capable of introducing up to 100% outdoor air for minimum ventilation as well as free cooling.
D. Damper actuator shall be electronic, fully modulating design.
E. Economizer outdoor hood shall be pre-painted and fully integrated with the unit.
F. Dry Bulb Control: Provide dry bulb sensor capable of measuring temperature of outdoor air and controlling economizer cut-in point at the most economical level. High level cutoff shall be set per applicable energy code.
1. Provide economizer Fault Detection and Diagnostics (FDD).

2.10 POWER EXHAUST:
A. Package shall include exhaust fan(s) and damper for units with economizer to control over-pressurization of building including integral pressure controls.

2.11 WATER LEVEL MONITORING DEVICE:
A. A water-level monitoring device shall be installed inside the primary drain pan. This device shall shut off the equipment served in the event that the primary drain becomes restricted. Devices installed in the drain line shall not be permitted.

2.12

2.13 OPERATING CONTROLS
A. Provide low voltage, adjustable thermostat to control heater stages in sequence with delay between stages, compressor and condenser fan, and supply fan to maintain temperature setting.
1. Include system selector switch (off-heat-auto-cool) and fan control switch (auto-on).
2. The Mechanical Contractor shall provide all control wiring between thermostat and unit control panel and any required remote sensors.
3. Locate thermostat in room as shown.
4. Electric solid state microcomputer based room thermostat, located as indicated. Provide remote sensors when indicated on the Drawings.
a. Room thermostat shall incorporate:
1. Automatic switching from heating to cooling.
2. Preferential rate control to minimize overshoot and deviation from set point.
3. Automatic Start Capabilities: Controls shall be capable of automatically adjusting the daily start time of the HVAC system in order to bring each space to the desired occupied temperature immediately prior to scheduled occupancy.
4. Set-up for four separate temperatures per day.
5. Instant override of set point for continuous or timed period from one hour to 31 days.
6. Short cycle protection.
7. Programming based on weekdays, Saturday and Sunday.
8. Switch selection features including imperial or metric display, 12 or 24 hour clock, keyboard disable, remote sensor, fan on-auto.
b. Room thermostat display shall include:
1. Time of day.
2. Actual room temperature.
3. Programmed temperature.
4. Day of week.
5. System mode indication: heating, cooling, auto, off, fan auto, fan on.
6. Stage (heating or cooling) operation.

PART 3 EXECUTION

3.01 INSTALLATION
A. Install in accordance with manufacturer's instructions and NFPA 90A.
B. Mount units on factory built roof mounting curb providing watertight enclosure to protect ductwork and utility services. Install roof mounting curb level. Install roof mounting curb so that it bears on the building structure, not on top of the roof deck or roofing materials. Provide restraints where required by local codes.
C. Provide cooling condensate drain piping (and overflow piping if required) to approved location. Condensate piping shall be Schedule 40 galvanized steel pipe, Type L copper tube, or PVC. Contractor shall verify the selected material meets with the approval of all State, local authorities and utility company requirements. Verification of compliance of the selected piping material is the sole responsibility of the installing Contractor.
1. Condensate piping located within the building shall be insulated with 1/2 inch thick glass fiber or flexible elastomeric cellular foam insulation. Only metallic piping systems will be allowed in return air plenum ceiling space.

END OF SECTION

## SECTION 238127 – SMALL SPLIT-SYSTEM HEATING AND COOLING

PART 1 GENERAL

1.01 SECTION INCLUDES
A. Air-source heat pumps.
B. Indoor ductless fan & coil units.
C. Controls.
1. Room thermostats.

PART 2 PRODUCTS

2.01 MANUFACTURERS
A. Carrier Corporation; Trane Inc.; YORK; Lennox Industries

2.02 SYSTEM DESIGN
A. Split-System Heating and Cooling Units: Self-contained, packaged, matched factory-engineered and assembled, pre-wired indoor and outdoor units; UL listed.
1. Provide refrigerant lines internal to units and between indoor and outdoor units, factory cleaned, dried, pressurized and sealed, with insulated suction line. Size as recommended by the manufacturer. All refrigerant line sizes indicated on the Drawings are approximate and shall be adjusted as required based on the actual equipment provided to meet the manufacturer's recommended line sizing at no additional expense.
B. Performance Requirements:.
1. Equipment performance, efficiency and accessories shall be as scheduled on the Drawings and specified herein. Inclusion in both locations is not a prerequisite to inclusion in the Contract. Equipment and accessories specified in either location shall be included in the Contract. Provide all necessary accessories and connections as required for a complete, functional system. Efficiency shall not be less than requirements of the units specified or indicated on the drawings, or the applicable local energy code.

2.03 INDOOR UNITS FOR DUCTLESS SYSTEMS
A. Indoor Units: Self-contained, packaged, factory assembled, pre-wired unit consisting of cabinet, supply fan, evaporator coil, and controls; wired for single power connection with control transformer.
B. Evaporator Coils: Copper tube aluminum fin assembly, galvanized or polymer drain pan sloped in all directions to drain, drain connection, refrigerant piping connections, restricted distributor or thermostatic expansion valve.
1. Construction and Ratings: In accordance with ARI 210/240 and UL listed.

2.04 OUTDOOR UNITS
A. Outdoor Units: Self-contained, packaged, factory assembled, pre-wired unit consisting of cabinet, with compressor and condenser.
1. Cabinet: Steel with baked enamel finish, easily removed and secured access doors with safety interlock switches, glass fiber insulation with reflective liner.
2. Construction and Ratings: In accordance with ARI 210/240 with testing in accordance with ASHRAE Std 23 and UL listed.
B. Compressor: ARI 520; hermetic, 3600 rpm, (multi-speed when indicated on the Drawings) resiliently mounted integral with condenser, with positive lubrication, crankcase heater, high pressure control, motor overload protection, service valves and drier. Provide time delay control to prevent short cycling.
C. Air Cooled Condenser: ARI 520; Aluminum fin and copper tube coil, with direct drive axial propeller fan resiliently mounted, galvanized fan guard.
D. Accessories: Filter drier, high pressure switch (manual reset), low pressure switch (automatic reset), service valves and gage ports, thermometer well (in liquid line).
1. Provide thermostatic expansion valves.
2. Provide heat pump reversing valves on all heat pump units.
E. Operating Controls:
1. Control by room thermostat to maintain room temperature setting.
2. Low Ambient Kit: On all systems not provided with economizer controls, provide refrigerant pressure switch to cycle condenser fan on when condenser refrigerant pressure is above 285 psig and off when pressure drops below 140 psig for operation to 0 degrees F.
F. Mounting Pad: Poured in place concrete, precast concrete or resin composite pad, minimum 4 inches thick, square.

2.05 ACCESSORY EQUIPMENT
A. Room Thermostat: Wall-mounted, electric solid state microcomputer based room thermostat with remote sensor to maintain temperature setting; low-voltage; with following features:
1. System selector switch (heat-off-cool) and fan control switch (auto-on).
2. Automatic switching from heating to cooling.
3. Preferential rate control to minimize overshoot and deviation from setpoint.
4. Automatic Start Capabilities: Controls shall be capable of automatically adjusting the daily start time of the HVAC system in order to bring each space to the desired occupied temperature immediately prior to scheduled occupancy.
5. Set-up for four separate temperatures per day.
6. Instant override of setpoint for continuous or timed period from one hour to 31 days.
7. Short cycle protection.
8. Programming based on every day of the week.
9. Selection features including degree F or degree C display, 12 or 24 hour clock, keyboard disable, remote sensor, fan on-auto.
10. Battery replacement without program loss.
11. Thermostat display:
a. Time of day.
b. Actual room temperature.
c. Programmed temperature.
d. Day of week.
e. System mode indication: heating, cooling, fan auto, off, and on, auto or on, off.

PART 3 EXECUTION

3.01 INSTALLATION
A. Install in accordance with manufacturer's instructions and requirements of local authorities having jurisdiction.
B. Install in accordance with NFPA 90A and NFPA 90B as applicable.
C. Provide cooling condensate drain piping (and overflow piping if required) to approved location. Condensate piping shall be Schedule 40 galvanized steel pipe, Type L copper tube, or PVC pipe (non-plenum applications). Contractor shall verify the selected material meets with the approval of all State, local authorities and utility company requirements. Verification of compliance of the selected piping material is the sole responsibility of the installing Contractor. Only metallic piping systems will be allowed in return air plenum ceiling space.
D. Install refrigeration systems in accordance with ASHRAE Std 15. Provide filter dryer, sight glass and solenoid valve on outdoor units and sight glass and expansion valve on indoor units.
E. All thermostat, humidistat (if required), damper interlock and other low voltage control wiring shall be installed by the Mechanical Contractor. The Electrical Contractor will furnish only the power system connections shown on the Electrical Drawings. All other control and interlock wiring is the responsibility of the Mechanical Contractor.

END OF SECTION

RELEASE FOR CONSTRUCTION
AS NOTED ON PLANS REVIEW
DEVELOPMENT SERVICES
LEE'S SUMMIT, MISSOURI
03/10/2021

Bergmeyer
BOS
51 Sleeper St.
6th Floor
Boston, MA 02210
617.542.1025
LA
800 South Figueroa St.
Suite 1080
Los Angeles, CA 90017
212.337.1090
www.bergmeyer.com

CONSULTANTS:
Schnackel engineers
800-581-0963
www.schnackel.com
SE JOB#: 200383

SEAL/ SIGNATURE:
STATE OF MISSOURI
GREGORY ROY SCHNACKEL
NUMBER
E-026570
REGISTERED PROFESSIONAL ENGINEER
Date: 03/05/21
COA #: E-2009006642

| NO. | BY | DATE | DESCRIPTION |
|---|---|---|---|
| 1 | | 2021-03-09 | ADDENDUM #1 |
| | | 2021-01-11 | PERMIT/BID SET |
| | | 2020-12-21 | 75% SET |
| | | 2020-10-12 | DD SET |

SHAKE SHACK

SHAKE SHACK - LEE'S SUMMIT MO

LEE'S SUMMIT
MISSOURI
SHACK #1348

PERMIT/BID SET

MECHANICAL SPECIFICATIONS

DRAWN BY: RAS
CHECKED BY: GRS
JOB NO: 20068.00

M591

RELEASE FOR CONSTRUCTION
AS NOTED ON PLANS REVIEW
DEVELOPMENT SERVICES
LEE'S SUMMIT, MISSOURI
03/10/2021

## SECTION 23 0800 - COMMISSIONING OF HVAC

PART 1 GENERAL
1.01 SUMMARY
A. See Section 01 9113 - General Commissioning Requirements for overall objectives; comply with the requirements of Section 01 9113.
B. This section covers the Contractor's responsibilities for commissioning; each subcontractor or installer responsible for the installation of a particular system or equipment item to be commissioned is responsible for the commissioning activities relating to that system or equipment item.
C. The Commissioning Authority (CA) directs and coordinates all commissioning activities and provides Prefunctional Checklists and Functional Test Procedures for Contractor's use.
D. The entire HVAC system is to be commissioned, including commissioning activities for the following specific items:
1. Control system.
2. Major and minor equipment items.
3. Piping systems and equipment.
4. Ductwork and accessories.
5. Terminal units.
6. Sound control devices.
7. Vibration control devices.
8. Variable frequency drives.
9. Special Ventilation: Hoods, pressurization, exhaust, etc.
10. Other equipment and systems explicitly identified elsewhere in Contract Documents as requiring commissioning.
11. Indoor Air Quality Procedures: The Commissioning Authority will coordinate; Contractor will execute; see Section 01 5719.
E. The Prefunctional Checklist and Functional Test requirements specified in this section are in addition to, not a substitute for, inspection or testing specified in other sections.
1.02 RELATED REQUIREMENTS
A. Section 23 0993 - Sequence of Operations for HVAC Controls.
B. Section 23 0593 - Testing, Adjusting, and Balancing for HVAC.
1.03 REFERENCE STANDARDS
A. ASHRAE Guideline 1.1 - The HVAC Commissioning Process; 2012.
1.04 SUBMITTALS
A. Updated Submittals: Keep the Commissioning Authority informed of all changes to control system documentation made during programming and setup; revise and resubmit when substantial changes are made.
B. DRAFT Prefunctional Checklists and Functional Test Procedures for Control System: Detailed written plan indicating the procedures to be followed to test, checkout and adjust the control system prior to full system Functional Testing; include at least the following for each type of equipment controlled:
1. System name.
2. List of devices.
3. Step-by-step procedures for testing each controller after installation, including:
a. Process of verifying proper hardware and wiring installation.
b. Process of downloading programs to local controllers and verifying that they are addressed correctly.
c. Process of performing operational checks of each controlled component.
d. Plan and process for calibrating valve and damper actuators and all sensors.
e. Description of the expected field adjustments for transmitters, controllers and control actuators should control responses fall outside of expected values.
4. Copy of proposed log and field checkout sheets to be used to document the process; include space for initial and final read values during calibration of each point and space to specifically indicate when a sensor or controller has "passed" and is operating within the contract parameters.
5. Description of the instrumentation required for testing.
6. Indicate what tests on what systems should be completed prior to TAB using the control system for TAB work. Coordinate with the Commissioning Authority and TAB contractor for this determination.
C. Startup Reports, Prefunctional Checklists, and Trend Logs: Submit for approval of Commissioning Authority.
D. HVAC Control System O&M Manual Requirements. In addition to documentation specified elsewhere, compile and organize at minimum the following data on the control system:
1. Specific step-by-step instructions on how to perform and apply all functions, features, modes, etc. mentioned in the controls training sections of this specification and other features of this system. Provide an index and clear table of contents. Include the detailed technical manual for programming and customizing control loops and algorithms.
2. Full as-built set of control drawings.
3. Full as-built sequence of operations for each piece of equipment.
4. Full points list; in addition to the information on the original points list submittal, include a listing of all rooms with the following information for each room:
a. Floor.
b. Room number.
c. Room name.
d. Air handler unit ID.
e. Reference drawing number.
f. Air terminal unit tag ID.
g. Heating and/or cooling valve tag ID.
h. Minimum air flow rate.
i. Maximum air flow rate.
5. Full print out of all schedules and set points after testing and acceptance of the system.
6. Full as-built print out of software program.
7. Electronic copy on disk of the entire program for this facility.
8. Marking of all system sensors and thermostats on the as-built floor plan and HVAC drawings with their control system designations.
9. Maintenance instructions, including sensor calibration requirements and methods by sensor type, etc.
10. Control equipment component submittals, parts lists, etc.
11. Warranty requirements.
12. Copies of all checkout tests and calibrations performed by the Contractor (not commissioning tests).
13. Organize and subdivide the manual with permanently labeled tabs for each of the following data in the given order:
a. Sequences of operation.
b. Control drawings.
c. Points lists.
d. Controller and/or module data.
e. Thermostats and timers.
f. Sensors and DP switches.
g. Valves and valve actuators.
h. Dampers and damper actuators.
i. Program setups (software program printouts).
E. Project Record Documents:
1. Submit updated version of control system documentation, for inclusion with operation and maintenance data.
2. Show actual locations of all static and differential pressure sensors (air, water and building pressure) and air-flow stations on project record drawings.
F. Draft Training Plan:
1. Follow the recommendations of ASHRAE Guideline 1.1.
2. Control system manufacturer's recommended training.
3. Demonstration and instruction on function and overrides of any local packaged controls not controlled by the HVAC control system.
G. Training Manuals:
1. Provide three extra copies of the controls training manuals in a separate manual from the O&M manuals.
H. Submittals are reviewed only for general compliance with the Contract Documents. Dimensions, quantities and details are not checked during submittal review. Review of the submittals does not relieve the Contractor of the responsibility for providing all materials, equipment and accessories necessary for a complete and operational system meeting the requirements of the project and the intent of the Contract Documents. The responsibility for coordination of substituted materials and equipment lies solely with the substituting Contractor.
PART 2 PRODUCTS
2.01 TEST EQUIPMENT
A. Provide all standard testing equipment required to perform startup and initial checkout and required functional performance testing; unless otherwise noted such testing equipment will NOT become the property of Owner.
B. Equipment-Specific Tools: Where special testing equipment, tools and instruments are specific to a piece of equipment, are only available from the vendor, and are required in order to accomplish startup or Functional Testing, provide such equipment, tools, and instruments as part of the work at no extra cost to Owner; such equipment, tools, and instruments are to become the property of Owner.
PART 3 EXECUTION
3.01 PREPARATION
A. Cooperate with the Commissioning Authority in development of the Prefunctional Checklists and Functional Test Procedures.
B. Furnish additional information requested by the Commissioning Authority.
C. Prepare a preliminary schedule for HVAC pipe and duct system testing, flushing and cleaning, equipment start-up and testing, adjusting, and balancing start and completion for use by the Commissioning Authority; update the schedule as appropriate.
D. Notify the Commissioning Authority when pipe and duct system testing, flushing, cleaning, startup of each piece of equipment and testing, adjusting, and balancing will occur; when commissioning activities not yet performed or not yet scheduled will delay construction notify ahead of time and be proactive in seeing that the Commissioning Authority has the scheduling information needed to efficiently execute the commissioning process.
E. Put all HVAC equipment and systems into operation and continue operation during each working day of testing, adjusting, and balancing and commissioning, as required.
1. Include cost of sheaves and belts that may be required for testing, adjusting, and balancing.
F. Provide test holes in ducts and plenums where directed to allow air measurements and air balancing; close with an approved plug.
G. Provide temperature and pressure taps in accordance with the Contract Documents.
3.02 INSPECTING AND TESTING - GENERAL
A. Submit startup plans, startup reports, and Prefunctional Checklists for each item of equipment or other assembly to be commissioned.
B. Perform the Functional Tests directed by the Commissioning Authority for each item of equipment or other assembly to be commissioned.
C. Provide two-way radios for use during the testing.
D. Valve/Damper Stroke Setup and Check:
1. For all valve/damper actuator positions checked, verify the actual position against the control system readout.
2. Set pump/fan to normal operating mode.
3. Command valve/damper closed; visually verify that valve/damper is closed and adjust output zero signal as required.
4. Command valve/damper open; verify position is full open and adjust output signal as required.
5. Command valve/damper to a few intermediate positions.
6. Verify proper operational of Normally Open or Normally closed positions of all valves/dampers by means of normal operating mode tests plus removal of power to confirm proper closure or opening upon failure of power or control signal.
7. Perform valve/damper leakage testing on all dampers by applying normal operating pressure with the valve/damper in the closed position and measure either the delta T across coils or airflow through dampers to confirm compliance with specification requirements for dampers and zero leakage for valves.
8. If actual valve/damper position does not reasonably correspond, replace actuator.
9. Closure for Heating Coil Valves - Normally Open:
a. Set heating setpoint 20 degrees F (11 degrees C) above room temperature.
b. Observe valve open.
c. Remove control air or power from the valve and verify that the valve stem and actuator position do not change.
d. Restore to normal.
e. Set heating setpoint to 20 degrees F (11 degrees C) below room temperature.
f. Observe the valve close.
g. For pneumatics, by override in the control system, increase pressure to valve by 3 psi (20 kPa) (do not exceed actuator pressure rating) and verify valve stem and actuator position does not change.
h. Restore to normal.
10. Closure for Cooling Coil Valves - Normally Closed:
a. Set cooling setpoint 20 degrees F (11 degrees C) above room temperature.
b. Observe the valve close.
c. Remove control air or power from the valve and verify that the valve stem and actuator position do not change.
d. Restore to normal.
e. Set cooling setpoint to 20 degrees F (11 degrees C) below room temperature.
f. Observe valve open.
g. For pneumatics, by override in the control system, increase pressure to valve by 3 psi (20 kPa) (do not exceed actuator pressure rating) and verify valve stem and actuator position does not change.
h. Restore to normal.
E. Coil Valve Leak Check:
1. Method 1 - Water Temperature With 2-Way Valve:
a. Calibrate water temperature sensors on each side of coil to be within 0.2 degree F (0.1 degree C ) of each other.
b. Turn off air handler fans, close outside air dampers. Keep pump running. Make sure appropriate coil dampers are open.
c. Normally closed valves will close.
d. Override normally open valves to the closed position.
e. After 10 minutes observe water delta T across coil. If it is greater than 2 degrees F ( (one degree C ), leakage is probably occurring.
f. Reset valve stroke to close tighter.
g. Repeat test until compliance is achieved.
2. Method 2 - Air Temperature With 2 or 3-Way Valve: Water leak-by less than 10 percent will likely not be detected with this method.
a. Calibrate air temperature sensors on each side of coil to be within 0.2 degree F (0.1 degree C ) of each other.
b. Air handler fans should be on.
c. Change mixed or discharge air setpoint, override values or bleed or squeeze bulb pneumatic controller to cause the valve to close.
d. After 5 minutes observe air delta T across coil. If it is greater than one degree F ( (0.5 degree C ), leakage is probably occurring.
e. Reset valve stroke to close tighter.
f. Repeat test until compliance is achieved.
3. Method 3 - Coil Drain Down: Not for 3-way valves.
a. Put systems in normal mode.
b. If cooling coil valve, remove all call for cooling; if heating coil valve, put system in full cooling.
c. Close isolation valve on supply side of coil, open air bleed cap, open drain-down cock and drain water from coil.
d. If water does not stop draining, there may be a leak through the control valve.
e. Return all to normal when done.
F. Isolation Valve or System Valve Leak Check: For valves not by coils.
1. With full pressure in the system, command or move valve closed.
2. Use an ultra-sonic flow meter to detect flow or leakage.
G. Deficiencies: Correct deficiencies and re-inspect or re-test, as applicable, at no extra cost to Owner.
3.03 TAB COORDINATION
A. TAB: Testing, adjusting, and balancing of HVAC.
B. Coordinate commissioning schedule with TAB schedule.
C. Review the TAB plan to determine the capabilities of the control system toward completing TAB.
D. Provide all necessary unique instruments and instruct the TAB technicians in their use; such as handheld control system interface for setting terminal unit boxes, etc.
E. Have all required Prefunctional Checklists, calibrations, startup and component Functional Tests of the system completed and approved by the Commissioning Authority prior to starting TAB.
F. Provide a qualified control system technician to operate the controls to assist the TAB technicians or provide sufficient training for the TAB technicians to operate the system without assistance.
3.04 CONTROL SYSTEM FUNCTIONAL TESTING
A. Prefunctional Checklists for control system components will require a signed and dated certification that all system programming is complete as required to accomplish the requirements of the Contract Documents and the detailed Sequences of Operation documentation submittal.
B. Do not start Functional Testing until all controlled components have themselves been successfully Functionally Tested in accordance with the Contract Documents.
C. Using a skilled technician who is familiar with this building, execute the Functional Testing of the control system as required by the Commissioning Authority.
D. Functional Testing of the control system constitutes demonstration and trend logging of control points monitored by the control system.
1. The scope of trend logging is partially specified; trend log up to 50 percent more points than specified at no extra cost to Owner.
2. Perform all trend logging specified in Prefunctional Checklists and Functional Test procedures.
E. Functionally Test integral or stand-alone controls in conjunction with the Functional Tests of the equipment they are attached to, including any interlocks with other equipment or systems; further testing during control system Functional Test is not required unless specifically indicated below.
F. Demonstrate the following to the Commissioning Authority during testing of controlled equipment; coordinate with commissioning of equipment.
1. Setpoint changing features and functions.
2. Sensor calibrations.
G. Demonstrate to the Commissioning Authority:
1. That all specified functions and features are set up, debugged and fully operable.
2. That scheduling features are fully functional and setup, including holidays.
3. That all graphic screens and value readouts are completed.
4. Correct date and time setting in central computer.
5. That field panels read the same time as the central computer; sample 10 percent of field panels; if any of those fail, sample another 10 percent; if any of those fail test all remaining units at no extra cost to Owner.
6. Functionality of field panels using local operator keypads and local ports (plug-ins) using portable computer/keypad; demonstrate 100 percent of panels and 10 percent of ports; if any ports fail, sample another 10 percent; if any of those fail, test all remaining units at no extra cost to Owner.
7. Power failure and battery backup and power-up restart functions.
8. Global commands features.
9. Security and access codes.
10. Occupant over-rides (manual, telephone, key, keypad, etc.).
11. O&M schedules and alarms.
12. Occupancy sensors and controls.
13. "After hours" use tracking and billing.
14. Communications to remote sites.
15. Fire alarm interlocks and response.
16. Fire protection and suppression systems interfaces.
17. Security system interlocks.
18. That points that are monitored only, having no control function, are reporting properly to the control system.
19. All control strategies and sequences not tested during controlled equipment testing.
20. Trend logging and graphing features that are specified.
21. Other integrated tests specified in the Contract Documents
22. That control system features that are included but not specified to be setup are actually installed.
H. Perform and submit trend logging on the following using the control system, for minimum period of 5 days including one weekend, if the control points are monitored by the control system:
1. Duty cycling, if specified.
2. Demand limiting, including over-ride of limiting.
3. Sequential staging ON of equipment; optionally demonstrate manually.
4. Optimum start-stop functions.
5. Miscellaneous equipment current or status for duty cycling and demand limiting.
6. Equipment or building kW or current for demand limiting.
7. Equipment optimum start/stop functions.
I. If the control system, integral control components, or related equipment do not respond to changing conditions and parameters appropriately as expected, as specified and according to acceptable operating practice, under any of the conditions, sequences, or modes tested, correct all systems, equipment, components, and software required at no additional cost to Owner.
3.05 OPERATION AND MAINTENANCE MANUALS
A. Add design intent documentation furnished by Engineer to manuals prior to submission to Owner.
B. Submit manuals related to items that were commissioned to Commissioning Authority for review; make changes recommended by Commissioning Authority.
C. Commissioning Authority will add commissioning records to manuals after submission to Owner.
3.06 DEMONSTRATION AND TRAINING
A. Demonstrate operation and maintenance of HVAC system to Owner' personnel; if during any demonstration, the system fails to perform in accordance with the information included in the O&M manual, stop demonstration, repair or adjust, and repeat demonstration. Demonstrations may be combined with training sessions if appropriate.
B. These demonstrations are in addition to, and not a substitute for, Prefunctional Checklists and demonstrations to the Commissioning Authority during Functional Testing.
C. Provide classroom and hands-on training of Owner's designated personnel on operation and maintenance of the HVAC system, control system, and all equipment items indicated to be commissioned. Return for follow up training not less than 30 days after initial training and not more than 6 months after initial training.
D. Provide professional digital video recording of all instruction sessions and deliver two copies on DVD's to the Owner for future reference.
E. TAB Review: Instruct Owner's personnel for minimum eight hours, after completion of TAB, on the following:
1. Review final TAB report, explaining the layout and meanings of each data type.
2. Discuss any outstanding deficient items in control, ducting or design that may affect the proper delivery of air or water.
3. Identify and discuss any terminal units, duct runs, diffusers, coils, fans and pumps that are close to or are not meeting their design capacity.
4. Discuss any temporary settings and steps to finalize them for any areas that are not finished.
5. Other salient information that may be useful for facility operations, relative to TAB.
F. HVAC Control System Training: Perform training in at least three phases:
1. Phase 1 - Basic Control System: Provide minimum of 16 hours of actual training on the control system itself. Upon completion of training, each attendee, using appropriate documentation, should be able to perform elementary operations and describe general hardware architecture and functionality of the system.
a. This training may be held on-site or at the manufacturer's facility.
b. If held off-site, the training may occur prior to final completion of the system installation.
c. For off-site training, Contractor shall pay expenses of up to two attendees.
2. Phase 2 - Integrating with HVAC Systems: Provide minimum of 16 hours of on-site, hands-on training after completion of Functional Testing. Include instruction on:
a. The specific hardware configuration of installed systems in this facility and specific instruction for operating the installed system, including interfaces with other systems, if any.
b. Security levels, alarms, system start-up, shut-down, power outage and restart routines, changing setpoints and alarms and other typical changed parameters, overrides, freeze protection, manual operation of equipment, optional control strategies that can be considered, energy savings strategies and set points that if changed will adversely affect energy consumption, energy accounting, procedures for obtaining vendor assistance, etc.
c. Trend logging and monitoring features (values, change of state, totalization, etc.), including setting up, executing, downloading, viewing both tabular and graphically and printing trends; provide practice in setting up trend logging and monitoring during training session.
d. Every display screen, allowing time for questions.
e. Use of keypad or plug-in laptop computer at the zone level.
f. Use of remote access to the system via phone lines or networks.
g. Setting up and changing an air terminal unit controller.
h. Graphics generation.
i. Point database entry and modifications.
j. Understanding DDC field panel operating programming, when applicable.
3. Phase 3 - Post-Occupancy: Six months after occupancy conduct minimum of 16 hours of training. Tailor training session to questions and topics solicited beforehand from Owner. Also be prepared to address topics brought up and answer questions concerning operation of the system.
G. Provide the services of manufacturer representatives to assist instructors where necessary.
H. Provide the services of the HVAC controls instructor at other training sessions, when requested, to discuss the interaction of the controls system as it relates to the equipment being discussed.

END OF SECTION

## SECTION 23 0993 - SEQUENCE OF OPERATIONS FOR HVAC CONTROLS

PART 1 GENERAL
1.01 SECTION INCLUDES
A. This Section defines the manner and method by which controls function. Requirements for each type of control system operation are specified. Equipment, devices, and system components required for control systems are specified in other sections.
B. This Section provides the intended sequence of operation for each piece of controlled equipment. Other Sections of this Specification indicate the requirements for direct digital control systems, energy management systems, packaged factory controls or conventional analog control systems. Equipment, devices, and system components required for control systems are specified in other Sections. Wherever the sequences contained herein indicate control by a thermostat or EMS sensor/controller, the Temperature Control Contractor shall furnish EMS sensor/controllers for digital control systems or a thermostat for conventional analog control systems as specified in other sections of this Specification.
C. Sequence of operation for:
1. Air terminal units.
a. Single duct bypass.
1) Cooling only variable volume.
2) Automatic heating/cooling changeover variable volume.
b. Single duct variable volume.
1) Cooling only.
2) Cooling with reheat.
(a) Electric reheat.
(b) Hot water reheat.
c. Dual duct variable volume.
d. Fan powered variable volume.
1) Series units.
2) Parallel units.
2. Cabinet heaters.
a. Hydronic.
b. Steam.
c. Electric.
d. Freeze protection.
3. Central refrigeration systems.
a. Chillers.
b. Condensing water pumps.
c. Chilled water pumps.
d. Cooling towers.
e. Pan heaters and heat tape.
f. Chilled water valve position temperature reset and pump control.
1) Single chiller.
2) Two chillers.
3) Multiple chillers.
g. Conventional chilled water temperature reset.
h. Chiller sequencing (multiple chiller installations).
i. Water side economizer.
4. Central station air handling units.
a. Freeze protection.
b. Over-pressure shutdown control.
c. Face and bypass preheat coil.
d. Outside air damper, non-economizer systems.
e. Humidifier.
f. Outside, return and relief dampers, economizer systems.
g. Demand controlled ventilation.
h. Hydronic heating.
i. Steam heating.
j. Electric heating.
k. Chilled water cooling.
l. Direct expansion cooling.
m. Multi-zone systems.
n. Dual duct systems.
o. Induction systems.
p. Supply air fan static pressure control.
q. Return air fan static pressure control.
5. Combustion air dampers.
6. Combustion air heaters.
a. Hydronic.
b. Steam.
c. Electric.
d. Gas.
e. Freeze protection.
7. Electrical rooms and telephone rooms.
a. Exhaust ventilation.
b. Air conditioning.
8. Elevator machine rooms.
a. Exhaust ventilation.
b. Air conditioning.
9. Emergency generators.
a. Indoor unit ventilation dampers.
b. Status monitoring and load control.
10. Hydronic pump pressure controls.
a. Two pump non-simultaneous operation.
b. Multiple pump simultaneous operation.
c. Over-pressure shutdown control.
11. Fan coil units.
a. Hydronic heating.
b. Steam heating.
c. Electric heating.
d. Chilled water cooling.
e. Direct expansion cooling.
f. Heat pump heating/cooling.
g. Automatic changeover.
h. Variable speed supply fan.
i. Outside air damper, non-economizer systems.
j. Outside, return and relief dampers, economizer systems.
k. Humidifier.
l. Demand controlled ventilation.
m. Freeze protection.
12. Heating coils.
a. Hydronic.
b. Steam.
c. Electric.
d. Freeze protection.
13. Heating water boiler control.
14. Humidifiers.
15. Induction units.
16. Parking garage ventilation systems.
a. CO Ventilation control.
b. Make up air heater.
1) Hydronic.
2) Steam.
3) Electric.
4) Gas.
5) Freeze protection.
17. Radiant panels.
18. Radiation and convectors.
a. Hydronic.
b. Steam.
c. Electric.
19. Refrigeration systems.
20. Unit heaters.
a. Hydronic
b. Steam.
c. Electric.
d. Gas.
21. Exhaust fans.
a. General duty building exhaust fans
b. Specific duty exhaust fans.
22. Make-up air fans.
a. Hydronic
b. Steam.
c. Electric.
d. Gas.
e. Direct expansion cooling.
f. Chilled water cooling.
g. Evaporative cooling.
h. Freeze protection.
i. Variable speed control.
j. Building pressure control.
23. Fresh air fans.
a. Hydronic
b. Steam.
c. Electric.
d. Gas.
e. Direct expansion cooling.
f. Chilled water cooling.
g. Evaporative cooling.
h. Freeze protection.
i. Variable speed control.
j. Building pressure control.
24. Control of package HVAC equipment containing factory mounted controls.
a. Single Zone Systems.
b. Variable Air Volume Systems.
c. Variable Volume and Temperature System (VVT).
25. Heat pump systems.
a. Heat exchanger.
b. Condensing water pump.
c. Heat pump loop pump.
d. Cooling tower.
e. Heating water supply system.
f. Heat pump unit controls.
g. Heat pump unit controls - Economizer and demand control ventilation.
h. Geothermal well field monitoring.
26. Smoke evacuation and smoke control systems.
27. Stairway pressurization systems.
28. Water metering and billing software.
29. Natural gas metering and billing software.
1.02 RELATED REQUIREMENTS
A. Section 23 0913 - Instrumentation and Control Devices for HVAC.
1.03 SYSTEM DESCRIPTION
A. Equipment performance, controls and accessories shall be as scheduled on the Drawings and specified herein. Inclusion in both locations is not a prerequisite to inclusion in the Contract. Equipment, controls and accessories specified in either location shall be included in the Contract. Provide all necessary controls, accessories and connections as required for a complete, functional system for all systems indicated on the Drawings.
B. All wiring of control systems including connections to controlled devices external to the control systems shall be included in the temperature controls contract as a part of the Mechanical Contract. The Electrical Contractor will only furnish power connections to devices at the locations indicated on the Electrical Drawings. Review the Electrical Drawings for locations where power connections will be provided. This Contractor shall provide all additional necessary power and control wiring for a complete and functional system.
C. Provide all conduit and electrical wiring where required. Wiring shall be installed in conduit wherever wiring is concealed in inaccessible areas of ceilings, walls, attics and floors. Conduit shall be installed in all locations required by applicable local and national codes. Other locations may be installed utilizing plenum rated cabling without conduit, provided that all cabling is neatly and adequately supported independent of all other systems, equipment, ductwork, etc. Where cable trays exist, all wiring shall utilize the cable tray path, except at direct run outs to equipment or control connections.
D. All control settings and set points shall be individually adjustable. Set points specified in this Section shall be used as a guide for initial setup and may require subsequent adjustment to achieve the desired system functionality and performance.
1.04 SUBMITTALS
A. Sequence of Operation Documentation: Submit written sequence of operation for entire HVAC system and each piece of equipment.
1. Preface: 1 or 2 paragraph overview narrative of the system describing its purpose, components and function.
2. State each sequence in small segments and give each segment a unique number for referencing in Functional Test procedures; provide a complete description regardless of the completeness and clarity of the sequences specified in the Contract Documents.
3. Include at least the following sequences:
a. Start-up.
b. Warm-up mode.
c. Normal operating mode.
d. Unoccupied mode.
e. Shutdown.
f. Capacity control sequences and equipment staging.
g. Temperature and pressure control, such as setbacks, setups, resets, etc.
h. Detailed sequences for all control strategies, such as economizer control, optimum start/stop, staging, optimization, demand limiting, etc.
i. Effects of power or equipment failure with all standby component functions.
j. Sequences for all alarms and emergency shut downs.
k. Seasonal operational differences and recommendations.
l. Interactions and interlocks with other systems.
4. Include initial and recommended values for all adjustable settings, setpoints and parameters that are typically set or adjusted by operating staff; and any other control settings or fixed values, delays, etc. that will be useful during testing and operating the equipment.
5. For packaged controlled equipment, include manufacturer's furnished sequence of operation amplified as required to describe the relationship between the packaged controls and the control system, indicating which points are adjustable control points and which points are only monitored.
B. Control System Diagrams: Submit graphic schematic of the control system showing each control component and each component controlled, monitored, or enabled.
1. Label with settings, adjustable range of control and limits.
2. Include flow diagrams for each control system, graphically depicting control logic.
3. Include the system and component layout of all equipment that the control system monitors, enables or controls, even if the equipment is primarily controlled by packaged or integral controls.
4. Include draft copies of graphic displays indicating mechanical system components, control system components, and controlled function status and value.
5. Include all monitoring, control and virtual points specified in elsewhere.
6. Include a key to all abbreviations.
C. Points List: Submit list of all control points indicating at least the following for each point.
1. Name of controlled system.
2. Point abbreviation.
3. Point description; such as dry bulb temperature, airflow, etc.
4. Display unit.
5. Control point or setpoint (Yes / No); i.e. a point that controls equipment and can have its setpoint changed.
6. Monitoring point (Yes / No); i.e. a point that does not control or contribute to the control of equipment but is used for operation, maintenance, or performance verification.
7. Intermediate point (Yes / No); i.e. a point whose value is used to make a calculation which then controls equipment, such as space temperatures that are averaged to a virtual point to control reset.
8. Calculated point (Yes / No); i.e. a "virtual" point generated from calculations of other point values.
D. Project Record Documents: Record actual locations of components and setpoints of controls, including changes to sequences made after submission of shop drawings.
1.05 QUALITY ASSURANCE
A. Design system under direct supervision of a Professional Engineer experienced in design of this work and licensed at the State in which the Project is located.
B. Code or utility company requirements shall supersede any conflicting requirements of this Section.
PART 2 PRODUCTS - NOT USED
PART 3 EXECUTION
3.01 AIR TERMINAL UNITS
A. Time Schedule: Control terminal air units based on the programmed time and temperature schedule as determined by the Owner's operating personnel. Provide occupied/unoccupied mode control with night setback of temperatures based on programming.
B. Single-duct Bypass:
1. Cooling Mode Only:
a. Central air system supplies cool air.
b. On a rise in space temperature above the set-point, the bypass damper modulates open, increasing airflow to the space while simultaneously closing the bypass damper.
c. On a fall in space temperature below the set-point, the bypass damper modulates closed, reducing the airflow to the space while simultaneously opening the bypass damper.
d. Provide minimum airflow with field set, minimum stop.
2. Automatic Heating/Cooling Changeover:
a. Cooling Mode (Supply air system in cooling mode below 75 degrees F (24 degrees C)).
1) On a rise in space temperature above set-point, the bypass damper modulates open, increasing the flow of cool air to the space while simultaneously closing the bypass damper.
2) On a fall in space temperature below the set-point, the bypass damper modulates closed, reducing the airflow to the space while simultaneously opening the bypass damper.
b. Heating Mode (Supply air system in heating mode above 78 degrees F (26 degrees C)).
1) On a rise in space temperature above set-point, the bypass damper modulates closed, reducing the flow of warm air to the space while simultaneously opening the bypass damper.
2) On a fall in space temperature below the set-point, the bypass damper modulates open, increasing the flow of warm air to the space while simultaneously closing the bypass damper.
C. Single-duct Variable Volume:
1. Cooling Only:
a. On a rise in space temperature, the damper will modulate to provide maximum airflow.
b. As space temperature decreases, the damper will modulate down to its minimum airflow.
2. Cooling with Reheat:
a. On a rise in space temperature above the cooling set-point, the unit modulates to its maximum airflow.
b. As the space temperature falls below the cooling set-point, the unit modulates to its minimum airflow.
c. As the space temperature continues to fall to the heating set-point, the terminal modulates to its heating minimum airflow. At this point, the heat will be staged on as follows:
1) Stage electric heating coil in increments provided by the coil manufacturer.
2) Modulate hot water heating coil from 10% to 100% of the valve open position.
D. Dual-Duct:
1. As the space temperature rises above the cooling set-point, the primary airflow is modulated from the cooling minimum airflow to the cooling maximum airflow.
2. As the space temperature falls below the heating set-point, the secondary airflow is modulated from the heating minimum airflow to the heating maximum airflow.
3. Between the heating and cooling set-points, both the primary airflow and secondary airflow are modulated to maintain dual mixing minimum.
E. Fan-powered:
1. Series Units:
a. Series-fan runs continuously via control interlock with the AHU supply fan.
b. The air valve modulates the primary airflow in response to space temperature with the reheat de-energized.
c. Reheat is activated to increase discharge temperature when further decrease in primary airflow will not maintain space temperature.
2. Parallel Units:
a. The primary air valve delivers cooled air to the unit outlet.
b. Upon decrease in space temperature beyond control of the primary air valve, the fan is simultaneously energized along with the first stage of heat.
c. Parallel fan delivers warm plenum air from the controlled space to the unit outlet, mixing with the primary air before entering the space.
3.02 CABINET HEATERS
A. Time Schedule: Control cabinet heaters based on the programmed time schedule as determined by the Owner's operating personnel. Provide occupied/unoccupied mode control with night setback of temperatures, where applicable.
B. Single temperature room thermostat with night set back or EMS sensor/controller, set at 68 degrees F (20 degrees C) during the occupied mode and 15 degrees F (8 degrees C) cooler during the unoccupied mode. Maintain constant space temperature by cycling unit fan motor. Close two way valve when fan motor is not operating.
C. Single temperature thermostat or EMS sensor/controller on return heating line de-energizes unit on temperatures below 95 degrees F (35 degrees C).
D. Single temperature thermostat or EMS sensor/controller on steam supply line de-energizes unit on temperatures below 200 degrees F. (93 degrees C).
E. Single temperature room thermostat or EMS sensor/controller set at 68 degrees F (20 degrees C) during the occupied mode and 15 degrees F (8 degrees C) cooler during the unoccupied mode maintains constant space temperature by cycling unit fan motor and electric heating elements. Integral thermostat continues fan operation until element temperature falls below 100 degrees F (38 degrees C) .
F. Freeze Protection: Stop fans and close outside air dampers and open heating coil valves to 100% open if temperature ahead of coils is below 37 degrees F (3 degrees C); signal alarm. (Except pre-heat coils.)
3.03 CENTRAL REFRIGERATION SYSTEMS
A. Time Schedule: Start and stop condensing water pump based on the programmed time schedule as determined by the Owner's operating personnel.
B. Condensing Water Pump: Allow start on proof of water in cooling tower sump and an outdoor temperature above 32 degrees F (0 degrees C). Alternate duty between condenser water pumps and log hours of operation separately for each pump. Upon failure of one pump, the system shall report an alarm condition and automatically start the alternate pump.
C. Chilled Water Pump: Energize chilled water pump to start and allow cooling tower fans to start when condensing water pump is started. Alternate duty between the multiple chilled water pumps and log hours of operation separately for each pump. Upon failure of one pump, the system shall report an alarm condition and automatically start the alternate pump.
D. When chilled water pump starts, open chiller control valve to the selected primary chiller (in multi-chiller installations).
E. When chilled water flow and condensing water flow are proven by flow switches, allow refrigeration machine to start.
F. Maintain minimum condenser water temperature of 75 degrees F (24 degrees C), or as recommended by the chiller manufacturer, by modulating the cooling tower fans and condenser water pump speed. Condenser water control sequence shall start with the minimum water flow rate as required by the chiller manufacturer based on the number of operating chillers. The tower fans shall be staged and modulated individually from zero to 100% of installed capacity, while remaining at the minimum condenser water flow rate. Once all fans are at full speed, the condenser water flow rate shall be increased as necessary to maintain the condenser water set point. As the load is reduced, the operating sequence shall reverse.
G. Maintain temperature in cooling tower sump of 40 degrees F (4.5 degrees C) by cycling pan heaters. Outdoor thermostat or EMS sensor/controller set at 35 degrees F (2 degrees C) shall activate electric heat tracing.
H. Control function of condenser water reset, chilled water reset, and chiller sequencing. Support inch-pounds and SI (metric) units of measurement.
I. Condenser Water Reset: Automatically reset controlled condenser water temperature set point using measured outside wet bulb temperature and load being handled.
J. Valve Position Chilled Water Reset and Pump Control (Single Chiller): Automatically reset the chilled water temperature and vary the system flow while satisfying cooling coil requiring greatest cooling. The sequence is broken down into two operational modes, "Light Load" and "Heavy Load" modes.
1. During "Light Load" operation, the goal is to minimize the amount of flow within the system and maintain the highest possible temperature difference between the chilled water supply temperature and the chilled water return temperature. Minimizing flow will result in the lowest possible system pumping energy. Maximizing the chiller temperature difference will result in the maximum possible chiller efficiency at any operating point. This is accomplished by setting the chilled water pump VFD to the required minimum water flow rate of the chiller and resetting the chilled water supply temperature based on the position feedback received from the control valves on the air handling unit coils. The chilled water supply temperature is set to a value that will result in the most heavily loaded chilled water coil operating at the full open position, while still maintaining the zone set point temperature plus its dead band. If the most heavily loaded coil requires additional cooling to maintain the zone temperature set point, then the chilled water temperature is lowered incrementally to satisfy the worst-case zone in the system. Once the minimum specified chilled water temperature is reached, the system enters the "Heavy Load" operating mode. If the most open valve in the system begins to close, the sequence reverses and the chilled water temperature is incrementally reset upwards.
2. During "Heavy Load" operation, the goal is to maintain the highest possible difference between the chilled water supply temperature and the chilled water return temperature at the minimum possible system flow rate. This is accomplished by maintaining the chilled water supply temperature set point at its specified minimum value and varying the chilled water flow rate based on the position feedback received from the valves on the air handling unit coils, always remaining above the minimum flow rate of the chiller. If the water flow rate drops to the minimum flow rate of the chiller, the system switches to the "Light Load" operating mode. If the most heavily loaded cooling coil, as determined by a monitored 100% open position of the coil valve, is not able to maintain the zone temperature plus the dead band, the system water flow rate is incrementally increased to increase the water flow rate through the coil to attempt to compensate with more chilled water GPM.
K. Valve Position Chilled Water Reset and Pump Control (Two or More Chillers): Automatically reset the chilled water temperature and vary the system flow while satisfying cooling coil requiring greatest cooling. The sequence is broken down into three operational modes, "Light Load", "Moderate Load" and "Heavy Load" modes.
1. During "Light Load" operation, the goal is to minimize the amount of flow within the system and maintain the highest possible temperature difference between the chilled water supply temperature and the chilled water return temperature. Minimizing flow will result in the lowest possible system pumping energy. Maximizing the chiller temperature difference will result in the maximum possible chiller efficiency at any operating point. This is accomplished by setting the chilled water pump VFD to the minimum water flow rate of a single operating chiller and resetting the chilled water supply temperature based on the position feedback received from the control valves on the air handling unit coils. The chilled water supply temperature is set to a value that will result in the most heavily loaded chilled water coil operating at the full open position, while still maintaining the zone set point temperature plus its dead band. If the most heavily loaded coil requires additional cooling to maintain the zone temperature set point, then the chilled water temperature is lowered incrementally to satisfy the worst-case zone in the system. Once the minimum specified chilled water temperature is reached, the system enters the "Moderate Load" operating mode. If the most open valve in the system begins to close, the sequence reverses and the chilled water temperature is incrementally reset upwards.
2. During "Moderate Load" operation, the goal is to remain on single chiller operation as long as possible and maintain the highest possible difference between the chilled water supply temperature and the chilled water return temperature at the minimum possible system flow rate. This is accomplished by maintaining the chilled water supply temperature set point at its specified minimum value and varying the chilled water flow rate based on the position feedback received from the valves on the air handling unit coils, always remaining above the minimum flow rate of the single chiller in operation. If the water flow rate drops to the minimum flow rate of a single chiller, the system switches to the "Light Load" operating mode. If the most heavily loaded cooling coil, as determined by a monitored 100% open position of the coil valve, is not able to maintain the zone temperature plus the dead band, the system water flow rate is incrementally increased to increase the water flow rate through the coil to attempt to compensate with more chilled water GPM. This continues until the single chiller can no longer maintain the required chilled water set point, indicating an overload condition on the first chiller and the need to enter the "Heavy Load" operating mode.
3. During "Heavy Load" operation, the goal is to maintain the highest possible temperature difference between the chilled water supply temperature and the chilled water return temperature at the minimum possible system flow rate. This is accomplished by maintaining the chilled water supply temperature set point at its minimum value (42 degrees F adjustable) and varying the chilled water flow rate based on the position feedback received from the valves on the air handling unit coils. This sequence is essentially is essentially identical to the "Moderate Load" sequence above, except that two chillers are operating. If the chiller plant is adequately sized, there should be no loss of chilled water temperature control in the "Heavy Load" operating sequence. If the most heavily loaded coil valve begins to close and the chiller inlet to outlet temperature difference drops to 5 degrees F, adjustable, the system turns off the second chiller and switches to the "Moderate Load" operating mode.
4. If there are more than two chillers in the system, the "Heavy Load" operation sequence continues, adding additional chillers as the load rises and removing chillers as the load decreases.
L. Chilled Water Reset: Automatically reset the controlled chilled water temperature based on outdoor air temperature. Chilled water temperature shall be at its design minimum temperature at outdoor air temperatures about 75 degrees F (24 degrees C).
M. Chiller Sequencing (multiple chiller installations): Determine which combination of chillers will most efficiently satisfy chilled water load, by cycling chillers, based on comparing load to switchover limits defined for each chiller.
N. Water Side Economizer: Based on the set point temperature of the chilled water loop, as reset by the appropriate reset schedule (when applicable), and the temperature of the condenser water loop, activate the water side economizer cycle anytime that the condenser water is at or lower than the required chilled water temperature. Chiller(s) shall stop. The diverter valve shall open to the plate and frame heat exchanger. Chiller isolation valve shall close.after the heat exchanger valve has been confirmed to be 100% open..Chilled water reset schedule and water flow rate shall be controlled as specified for normal chiller operation. If the chilled water temperature can not be maintained to within +2 degrees F of the chilled water setpoint temperature, the system shall return to normal chiller operation.
3.04 CENTRAL STATION AIR HANDLING UNITS
A. Time Schedule: Start and stop supply and return fans. Determine fan status by pressure differential switches. If the fan fails to start as commanded, signal an alarm. Whenever the supply fan is de-energized, as sensed by the status switch, the outside and exhaust air dampers shall be closed and the return air damper shall be open, the heating and cooling valves shall be closed or positioned as described below and the humidifier (if any) shall be locked out.
1. Control central fan systems based on the programmed time schedule as determined by the Owner's operating personnel. Provide occupied/unoccupied mode control with adjustable night setback of temperatures, where applicable.
B. Safety Devices:
1. Freeze Protection: Stop fans and close outside air dampers and open heating coil valves (if any) to 100% open if temperature ahead of coils is below 37 degrees F (3 degrees C); signal alarm. (Except pre-heat coils.)
2. Smoke Detector: Stop fans, close outside dampers, and close smoke dampers if smoke is detected; signal alarm.
3. Provide an over limit differential pressure sensor between the supply and return duct at each fan to shut the fan down in the event of a high static pressure condition and signal an alarm. Over limit static pressure setting shall be 0.5 inches (adjustable) above design static pressure for the fan. This shutdown shall allow manual or automatic reset after a predetermined time period (30 minutes, adjustable).
C. Face and Bypass Preheat Coil:
1. When outside air temperature is below 40 degrees F (5 degrees C), fully open preheat coil valve to heating regardless of the operating mode of the fan.
2. When fan is running and the outside temperature is below 40 degrees F (5 degrees C), maintain the mixed air temperature set point by modulating the face and bypass dampers, leaving the preheat coil valve fully open.
3. When fan is running and the outside air temperature is above 40 degrees F (5 degrees C), maintain the mixed air temperature setpoint by modulating preheat coil valve.
4. When the fan is running and the outside air temperature is above 55 degrees F (12 degrees C) heating coil valve shall be closed and the face and bypass dampers shall be indexed to full bypass.
D. Outside Air Damper, Non-Economizer Systems: When supply fan is running, open outside air damper to supply quantity of outside air indicated on the Drawings. Close outside air damper in unoccupied mode.
E. Humidifier: When supply fan is running, humidistat (located in return air or wall if indicated on the Drawings) reset from outdoor air temperature modulates normally closed humidifier valve. Set outdoor reset to 50 percent relative humidity at 70 degrees F (21 degrees C) and 15 percent relative humidity at -30 degrees F (-35 degrees C).
F. Outside, Return, and Relief Dampers:
1. When supply fan is not running, outside and relief dampers are closed and return damper is open.
2. When supply fan is running, dampers are controlled and operate with outside and relief dampers opening, and return damper closing.
3. For cooling, and outside air temperatures below 55 degrees F (12 degrees C), modulate dampers to maintain mixed air temperature of 55 degrees F (12 degrees C) .
4. For cooling and outside air temperatures above 55 degrees F (12 degrees C) compare return and outside air temperatures. If return air temperature is lower, drive outside damper to minimum, close relief damper, and open return damper.
5. For outside air temperatures above 79 degrees F (26 degrees C), drive outside damper to minimum, close relief damper, and open return damper.
6. For heating, drive outside damper to minimum, close relief damper, and open return damper.
7. Minimum outside air position shall be as determined by the demand controlled ventilation control specified below (if any), or outside air quantity indicated on the Drawings.
8. Close outside air damper in unoccupied mode unless there is a call for cooling and the outside air enthalpy is below the return air enthalpy.
G. Demand Controlled Ventilation: The minimum outdoor air flow rate is established by the required outdoor air flow with no occupants and the required outdoor air flow at design occupancy. The damper positions corresponding to these two airflow rates shall be set in conjunction with the balance contractor. The outdoor air damper shall modulate between the no occupants position and the design occupancy position as the space CO2 concentration varies from 400 ppm (ambient) to 1,500 ppm (adjustable). If CO2 concentration exceeds 1,500 ppm (adjustable), signal an alarm. Close outside air damper in unoccupied mode.
H. Dual temperature thermostat or EMS sensor/controller set at 55 degrees F (12 degrees C) maintains constant duct temperature by modulating two-way heating control valve.
I. Dual temperature thermostat or EMS sensor/controller set at 55 degrees F (22 degrees C) maintains constant duct temperature by staging the electric heating elements.
J. Dual temperature thermostat or EMS sensor/controller set at 55 degrees F (12 degrees C) maintains constant duct temperature during the occupied mode and 10 degrees F (6 degrees C) warmer during the unoccupied mode by modulating two-way chilled water control valve.
K. Dual temperature thermostat or EMS sensor/controller set at 55 degrees F (12 degrees C) maintains constant duct temperature during the occupied mode and 10 degrees F (6 degrees C) warmer during the unoccupied mode by staging the available refrigeration compressors, unloaders and hot gas bypass on the condensing unit(s).
L. Multizone System:
1. Space sensor set at 75 degrees F (24 degrees C), maintains constant space temperature during the day and 15 degrees F (8 degrees C) cooler at night by modulating zone dampers.
2. Room calling for heating modulates reheat coil valve.
3. Discharge air temperature prior to zone reheat coil shall be maintained in accordance with outdoor reset schedule by modulating the cooling coil valve in conjunction with the outdoor air system.
M. Dual Duct System:
1. Control hot deck temperature in accordance with outdoor reset schedule by modulating reheat coil valve.
2. Control hot deck at maximum 135 degrees F (57 degrees C) at outdoor temperature of minus 30 degrees F (minus 35 degrees C), and minimum 75 degrees F (24 degrees C) at outdoor temperature of 75 degrees F (24 degrees C), with straight line relationship between.
3. Maintain cold deck temperature of 55 degrees F (12 degrees C) by modulating cooling coil valve.
4. Reset hot and cold deck temperatures. Room calling for greatest heating resets hot deck control temperature.
5. Room thermostat or EMS sensor/controller calling for greatest cooling resets cold deck temperature.
N. Induction System:
1. Control deck temperature in accordance with outdoor reset schedule by modulating heating and coiling coil valves and outdoor air economizer if present.
2. Control deck temperature at maximum 75 degrees F (24 degrees C) at outdoor temperature of -30 degrees F (-35 degrees C) , and minimum 55 degrees F (12 degrees C) at outdoor solar compensated temperature of 75 degrees F (24 degrees C) and above, with straight line relationship between.
O. Maintain constant supply air static pressure to the setpoint indicated on the equipment schedule on the Drawings by modulating the supply fan variable frequency drive speed control. Locate three averaging sensors upstream of the three most remote supply air branch duct take offs to control static pressure.
P. Maintain constant building pressure of 0.05 inches wg (12 Pa) measured at the grade level lobby by modulating the return air fan variable frequency drive speed control.
3.05 COMBUSTION AIR DAMPERS.
A. The Temperature Control Contractor shall furnish the "fail-open" dampers and actuators for the combustion air system. Interlock damper actuators with the respective water heater and boiler control panels so that the combustion air dampers open when the water heaters or boilers are firing.
B. Single temperature room thermostat or EMS sensor/controller set at 85 degrees F (29 degrees C) shall open the combustion air dampers if the boiler room temperature exceeds setpoint.
3.06 COMBUSTION AIR HEATERS
A. Single temperature room thermostat or EMS sensor/controller set at 68 degrees F (20 degrees C) maintains constant room temperature by modulating two-way heating control valve as follows:
1. When outside air temperature is below 40 degrees F (5 degrees C), fully open coil valve to heating regardless of the operating mode of the fan.
2. When fan is running and the outside temperature is below 40 degrees F (5 degrees C), maintain the mixed air temperature set point by modulating the face and bypass dampers, leaving the heating coil valve fully open.
3. When fan is running and the outside air temperature is above 40 degrees F (5 degrees C), maintain the mixed air temperature setpoint by modulating heating coil valve.
4. When the fan is running and the outside air temperature is above 55 degrees F (12 degrees C) heating coil valve shall be closed and the face and bypass dampers shall be indexed to full bypass.
B. Single temperature room thermostat or EMS sensor/controller set at 68 degrees F (20 degrees C) maintains constant space temperature by cycling unit fan motor and electric heating elements. Integral thermostat continues fan operation until element temperature falls below 100 degrees F (38 degrees C) .
C. Single temperature room thermostat or EMS sensor/controller set at 68 degrees F (20 degrees C) maintains constant space temperature by cycling unit fan motor and modulating gas burner.
D. Freeze Protection: Stop fans and close outside air dampers and open heating coil valves (if any) to 100% open if temperature downstream of coils is below 37 degrees F (3 degrees C); signal alarm and stop all combustion equipment in the room(s) served.
3.07 ELECTRICAL ROOMS AND TELEPHONE ROOMS
A. On room temperatures above 85 degrees F (29 degrees C) open intake damper and start exhaust fan. Interlock damper with exhaust fan operation.
B. On room temperatures above 85 degrees F (29 degrees C) activate air conditioning equipment.
C. On room temperatures above 90 degrees F (32 degrees C), signal alarm.
3.08 ELEVATOR MACHINE ROOMS

Bergmeyer
BOS
51 Sleeper St.
6th Floor
Boston, MA 02210
617.542.1025
LA
800 South Figueroa St.
Suite 1080
Los Angeles, CA 90017
212.337.1090
www.bergmeyer.com
CONSULTANTS:
Schnackel engineers
800-581-0963
www.schnackel.com
SE JOB#: 200383

SEAL/ SIGNATURE:
STATE OF MISSOURI
GREGORY ROY SCHNACKEL
NUMBER E-026570
REGISTERED PROFESSIONAL ENGINEER
Date: 03/05/21
COA #: E-2009006642

| NO. | BY | DATE | DESCRIPTION |
|---|---|---|---|
| 1 | | 2021-03-09 | ADDENDUM #1 |
| | | 2021-01-11 | PERMIT/BID SET |
| | | 2020-12-21 | 75% SET |
| | | 2020-10-12 | DD SET |

SHAKE SHACK

SHAKE SHACK - LEE'S SUMMIT MO

LEE'S SUMMIT
MISSOURI
SHACK #1348

PERMIT/BID SET

MECHANCIAL SPECIFICATIONS

DRAWN BY: RAS
CHECKED BY: GRS
JOB NO: 20068.00

M592

A. On room temperature above 85 degrees F (29 degrees C), start exhaust fan. Interlock damper with exhaust fan operation.
B. On room temperatures above 85 degrees F (29 degrees C) activate air conditioning equipment.
C. On room temperatures above 90 degrees F (32 degrees C), signal alarm.

3.09 EMERGENCY GENERATORS
A. When the generator is not running, outside and exhaust dampers are closed and recirculation damper is open.
B. When generator is running, dampers are controlled and operate with outside and exhaust dampers opening, and recirculating dampers closing, to maintain room temperature of 85 degrees F (30 degrees C).
C. Provide solenoid valve to shut off fuel supply when generator is not operating.
D. Digital control system shall monitor the generator to determine normal vs. emergency power conditions to control any necessary load shed or lockouts required while on emergency power operation as indicated on the Drawings or specified herein.

3.10 HYDRONIC PRESSURE CONTROLS
A. Maintain constant system pressure differential (adjustable) between supply and return lines by varying pump speed through variable speed drive control. Locate pressure sensors at the locations indicated on the Drawings. In the absence of locations identified on the Drawings, provide pressure sensors 2/3 of the total distance down each major branch of piping in the system, not to exceed 4 locations. Utilize the lowest sensed pressure to determine the required pump speed.
B. Provide an alarm at the system console upon failure of any pump as indicated by a loss of pressure across the operating pump(s) confirmed by a loss of current at a current sensing switch. Provide a differential pressure sensor switch and current sensing switch at each pump in the system for this purpose. Alarm each sensor separately at the system console.
C. On multiple pump systems, provide automatic alternation of all pumps in the lead position to provide uniform wear on all pumps. Alternating sequence shall occur at each switching of the pump operations based on the overall sequence of the pumps.
D. Where the drawings indicated redundant pump operation (two pumps specified at full system flow rate), the operation of the pumps shall be alternated to provide uniform wear on each pump. The lead pump shall be changed after each system shutdown. Standby pump(s) shall be locked out during lead pump operation.
E. Lag pump shall be locked out during operation of the lead pump.
F. Allow only a manual restart of the designated standby pump upon a physical confirmation of a loss of the lead pump.
G. Pumps shall be alernated for lead duty at each system shutdown cycle. Record and display the operating time of all pumps at the operator console.
H. Where the drawings indicate multiple simultaneous staged pump operation the start/stop sequence shall be as follows: Upon system start command from the DDC computer, the first pump shall start at minimum speed (10 Hz adj.). Pump speed shall be regulated based on the pressure control sequence stated above. One the first pump reach full speed (60 Hz) for 5 minutes (adj.), start the next pump. Both pumps shall converge and run at the same speed to maintain the remote pressure differential set point. If the total system demand exceeds the capacity of the running pumps (lead and first lag) for 10 minutes, start the third pump. All three pumps shall converge and run at the same speed to maintain the remote pressure set point.
I. During reducing load, as indicated by an increase in the remote pressure, the operating pumps shall decrease in speed in unison until they are operating at minimum speed (10 Hz adj.) for 5 minutes (adj.) at which time one of the operating pumps shall shut down. The remaining pump(s) shall have their speed re-indexed as required to maintain the required remote pressure set point. As the load continues to decrease, this sequence shall continue until only one pump is operational and sequence resumes single pump operational control.
J. Upon confirmed failure of a pump through both the differential pressure sensor and the current sensing switch, allow an automatic start of one of the lag pumps for continued system operation. A failure of only one of either the differential pressure switch or the current sensing switch shall not trigger an automatic lag pump start and shall initiate an audio and visual alarm at the operator's console.
K. Pumps shall be alernated for lead duty at each load reduction staging cycle. Record and display the operating time of all pumps at the operator console.
L. Provide a single, fast-acting, over limit differential pressure sensor between the supply and return lines at each pump to shut the pump down and signal an alarm. in the event of a no-flow, pump deadhead condition or system over pressure situation. This shutdown shall allow manual or automatic reset after a predetermined time period (30 minutes, adjustable). Set point of over pressure control shall be at 110 percent of design system maximum pump head (adjustable).

3.11 FAN COIL UNITS
A. Time Schedule: Control fan coil units based on the programmed time schedule as determined by the Owner's operating personnel. Provide occupied/unoccupied mode control with night setback of temperatures, where applicable.
B. Supply fan shall run continuously during the occupied period and cycle during the unoccupied period based on a demand for heating or cooling.
C. Dual temperature thermostat or EMS sensor/controller set at 72 degrees F (22 degrees C) maintains constant space temperature during the day and 15 degrees F (8 degrees C) cooler at night by modulating two-way control heating valve .
D. Dual temperature thermostat or EMS sensor/controller set at 72 degrees F (22 degrees C) maintains constant space temperature during the occupied mode and 15 degrees F (8 degrees C) cooler during the unoccupied mode by energizing electric heaters.
E. Dual temperature thermostat or EMS sensor/controller set at 75 degrees F (24 degrees C) maintains constant space temperature during the occupied mode and 10 degrees F (6 degrees C) warmer during the unoccupied mode by modulating two-way chilled water control valve.
F. Dual temperature thermostat or EMS sensor/controller set at 75 degrees F (24 degrees C) maintains constant space temperature during the occupied mode and 10 degrees F (6 degrees C) warmer during the unoccupied mode by cycling refrigeration compressors.
G. Dual temperature thermostat or EMS sensor/controller set at 75 degrees F (24 degrees C) maintains constant space temperature during the occupied mode and 10 degrees F (6 degrees C) warmer/cooler during the unoccupied mode by cycling refrigeration compressors and operating reversing valve on a call for heating.
H. Provide automatic change over from heating to cooling based on room demand.
I. Automatic Start Capabilities: Controls shall be capable of automatically adjusting the daily start time of the HVAC system in order to bring each space to the desired occupied temperature immediately prior to scheduled occupancy.
J. For heating and cooling fan coil units with fan speed control during heating cycle, increase fan speed as space temperature falls below thermostat or EMS sensor/controller setting, provided hot water or steam is available. During cooling cycle, increase fan speed as space temperature rises above thermostat or EMS sensor/controller setting, provided chilled water is available.
K. Outside Air Damper, Non-Economizer Systems: When supply fan is running, open outside air damper to supply quantity of outside air indicated on the Drawings. Close outside air damper in unoccupied mode.
L. Outside, Return, and Relief Dampers:
1. When supply fan is not running, outside and relief dampers are closed and return damper is open.
2. When supply fan is running, dampers are controlled and operate with outside and relief dampers opening, and return damper closing.
3. For cooling, and outside air temperatures below 55 degrees F (12 degrees C), modulate dampers to maintain mixed air temperature of 55 degrees F (12 degrees C) .
4. For cooling and outside air temperatures above 55 degrees F (12 degrees C) compare return and outside air enthalpies. If return air enthalpy is lower, drive outside damper to minimum, close relief damper, and open return damper.
5. For outside air temperatures above 79 degrees F (26 degrees C), drive outside damper to minimum, close relief damper, and open return damper.
6. For heating, drive outside damper to minimum, close relief damper, and open return damper.
7. Minimum outside air position shall be as determined by the demand controlled ventilation control specified below (if any), or outside air quantity indicated on the Drawings.
8. Close outside air damper in unoccupied mode, unless there is a call for cooling and the outside air enthalpy is below the return air enthalpy.
M. Humidifier: When supply fan is running, humidistat (located in return air or on wall if indicated on the Drawings) reset from outdoors modulates normally closed humidifier valve. Set outdoor reset to 50 percent relative humidity at 70 degrees F (21 degrees C) and 15 percent relative humidity at -30 degrees F (-35 degrees C).
N. Demand Controlled Ventilation: The minimum outdoor air flow rate is established by the required outdoor air flow with no occupants and the required outdoor air flow at design occupancy. The damper positions corresponding to these two airflow rates shall be set in conjunction with the balance contractor. The outdoor damper shall modulate between the no occupants position and the design occupancy position as the space $CO_2$ concentration varies from 400 ppm (ambient) to 1,500 ppm (adjustable). If $CO_2$ concentration exceeds 1,500 ppm (adjustable), signal an alarm. Close outside air damper in unoccupied mode.
O. Freeze Protection: Stop fans and close outside air dampers and open heating coil valves (if any) to 100% open if temperature ahead of coils is below 37 degrees F (3 degrees C); signal alarm. (Except pre-heat coils.)

3.12 HEATING COILS
A. Time Schedule: Control heating coils based on the programmed time schedule as determined by the Owner's operating personnel. Provide occupied/unoccupied mode control with night setback of temperatures, where applicable.
B. Single temperature thermostat or EMS sensor/controller set at 75 degrees F (24 degrees C) maintains constant space temperature during the day and 15 degrees F (8 degrees C) cooler at night by modulating two-way control heating valve .
C. Single temperature thermostat or EMS sensor/controller on return heating water line de-energizes unit on temperatures below 95 degrees F (35 degrees C).
D. Single temperature thermostat or EMS sensor/controller on steam heating line de-energizes unit on temperatures below 200 degrees F. (93 degrees C.)
E. Single temperature room thermostat or EMS sensor/controller set at 75 degrees F (24 degrees C) maintains constant space temperature by energizing electric heaters.
F. Freeze Protection: Stop fans and close outside air dampers and open heating coil valves (if any) to 100% open if temperature ahead of water coils is below 37 degrees F (3 degrees C); signal alarm. (Except pre-heat coils.)
G. Automatic Start Capabilities: Controls shall be capable of automatically adjusting the daily start time of the HVAC system in order to bring each space to the desired occupied temperature immediately prior to scheduled occupancy.

3.13 HEATING WATER BOILER CONTROL
A. Time Schedule: Control heating water supply pumps based on the programmed time schedule as determined by the Owner's operating personnel. Provide occupied/unoccupied mode control.
B. Maintain the integrity of the packaged boiler control equipment and sequences. The packaged unit controls shall operate such functions as the burner modulation, high limit and low limit safeties, etc. All set point, occupancy, staging and shutdown capabilities shall be controlled by the temperature control system.
C. Hot Water Pump: Energize hot water pump to start and allow boilers to start when in the occupied cycle. Alternate duty between the two hot water pumps and log hours of operation separately for each pump. Upon failure of one pump, the system shall report an alarm condition and automatically start the alternate pump.
D. When hot water pump starts, open boiler control valve to the selected primary boiler (in multi-boiler installations).
E. Flow switch in heating pump discharge provides on/off indication for operation of boilers.
F. Control heating water supply temperature set at 195 degrees F (90 degrees C) in accordance with outdoor reset schedule by stage firing boilers and modulating boiler burner valves. Alternate lead boiler duty and log hours of operation separately for each boiler.
G. Control heating water at maximum 195 degrees F (90 degrees C) at outdoor temperature of minus 30 degrees F (minus 35 degrees C), and minimum 130 degrees F (54 degrees C) at outdoor temperature of 75 degrees F (24 degrees C), with straight line relationship between.
H. Flow switch in heating water circuit on no flow conditions shall signal an alarm.
I. Water temperatures above 200 degrees F (94 degrees C) or below 100 degrees F (38 degrees C) shall signal an alarm. Suppress low water temperature alarm on outside temperatures above 65 degrees F (18 degrees C).
J. On outside temperatures above 65 degrees F (18 degrees C), de-energize boilers, heating pumps and suppress alarms.

3.14 HUMIDIFIERS
A. When supply fan is running and air flow switch proves air flow, humidistat (located in return air or on wall when indicated on the Drawings), reset from outdoors, modulates normally closed humidifier valve. Set outdoor reset to 50 percent relative humidity at 70 degrees F (21 degrees C) and 15 percent relative humidity at -30 degrees F (-35 degrees C).

3.15 INDUCTION UNITS
A. Time Schedule: Control induction units based on the programmed time schedule as determined by the Owner's operating personnel. Provide occupied/unoccupied mode control with night setback of temperatures, where applicable.
B. Dual temperature thermostat or EMS sensor/controller maintains constant space temperature at 75 degrees F (24 degrees C) during the occupied mode and 10 degrees F (6 degrees C) reset during the unoccupied mode by modulating two-way heating and cooling valve(s).
C. Automatic Start Capabilities: Controls shall be capable of automatically adjusting the daily start time of the HVAC system in order to bring each space to the desired occupied temperature immediately prior to scheduled occupancy.

3.16 PARKING GARAGE VENTILATION SYSTEMS
A. There are two fans associated with the parking garage ventilation fan. One fan (smaller fan) is continuous duty and shall not be interrupted by the control system. The main exhaust fan (larger fan) shall be controlled as follows:
1. Carbon Monoxide (CO) detector maintains maximum CO level of 25 ppm by varying the speed of the variable frequency drive (VFD), if provided, or two-speed motor on the exhaust fan in a stepped arrangement. Exhaust fan shall start at a speed resulting in 1/2 airflow upon sensing a CO level of 25 ppm by any sensor. Exhaust fan shall index to full speed/airflow upon sensing a CO level of 100 ppm. When CO level exceeds 150 ppm, signal an alarm. Reverse sequence, stop fan and close dampers when CO level drops below 25 ppm at all sensors.
2. When exhaust fan starts, start associated make-up air unit. Sequence fan speed on make up air heater to match exhaust fan speed using the two speed starter or variable frequency drive (VFD) on the make-up air unit.
a. Single temperature duct thermostat or EMS sensor/controller, set at 60 degrees F (15 degrees C), maintains constant discharge temperature by modulating two-way heating valve as follows:
1) When outside air temperature is below 40 degrees F (5 degrees C), fully open coil valve to heating regardless of the operating mode of the fan.
2) When fan is running and the outside temperature is below 40 degrees F (5 degrees C), maintain the mixed air temperature set point by modulating the face and bypass dampers, leaving the heating coil valve fully open.
3) When fan is running and the outside air temperature is above 40 degrees F (5 degrees C), maintain the mixed air temperature setpoint by modulating heating coil valve.
4) When the fan is running and the outside air temperature is above 55 degrees F (12 degrees C) heating coil valve shall be closed and the face and bypass dampers shall be indexed to full bypass.
b. Single temperature duct thermostat or EMS sensor/controller set at 60 degrees F (15 degrees C) maintains constant discharge temperature by staged energizing electric heating elements. Integral thermostat continues fan operation until element temperature falls below 100 degrees F (38 degrees C).
c. Single temperature duct thermostat or EMS sensor/controller set at 60 degrees F (15 degrees C) maintains constant discharge temperature by firing modulating gas burner.
d. Freeze Protection: Stop fans and close outside air dampers and open heating coil valves (if any) to 100% open if temperature downstream of coils is below 37 degrees F (3 degrees C); signal alarm.

3.17 RADIANT PANELS
A. Time Schedule: Control radiant panels based on the programmed time schedule as determined by the Owner's operating personnel. Provide occupied/unoccupied mode control with night setback of temperatures, where applicable.
B. Single temperature thermostat or EMS sensor/controller maintains constant space temperature set at 75 degrees F (24 degrees C) during the day and 15 degrees F (8 degrees C) cooler at night by modulating two-way control heating valve .
C. Automatic Start Capabilities: Controls shall be capable of automatically adjusting the daily start time of the HVAC system in order to bring each space to the desired occupied temperature immediately prior to scheduled occupancy.

3.18 RADIATION AND CONVECTORS
A. Time Schedule: Control radiation and convectors based on the programmed time schedule as determined by the Owner's operating personnel. Provide occupied/unoccupied mode control with night setback of temperatures, where applicable..
B. Single temperature thermostat or EMS sensor/controller set at 75 degrees F (24 degrees C) maintains constant space temperature during the day and 15 degrees F (8 degrees C) cooler at night by modulating two-way control heating valve .
C. Single temperature room thermostat or EMS sensor/controller set at 75 degrees F (24 degrees C) maintains constant space temperature by energizing electric heaters.
D. Automatic Start Capabilities: Controls shall be capable of automatically adjusting the daily start time of the HVAC system in order to bring each space to the desired occupied temperature immediately prior to scheduled occupancy.

3.19 REFRIGERATION SYSTEMS
A. Time Schedule: Control refrigeration systems based on the programmed time schedule as determined by the Owner's operating personnel. Provide occupied/unoccupied mode control with night setback of temperatures, where applicable.
B. Maintain temperatures of the refrigerated areas at setpoints to be determined by the Owner's operating personnel by cycling refrigeration systems and signaling stepped capacity controls.

3.20 UNIT HEATERS
A. Time Schedule: Control unit heaters based on the programmed time schedule as determined by the Owner's operating personnel. Provide occupied/unoccupied mode control with night setback of temperatures, where applicable.
B. Single temperature room thermostat or EMS sensor/controller with night set back, set at 68 degrees F (20 degrees C) during the occupied mode and 15 degrees F (8 degrees C) cooler during the unoccupied mode maintains constant space temperature by cycling unit fan motor. Close two way valve when fan motor is not operating.
C. Single temperature thermostat or EMS sensor/controller on return heating water line de-energizes unit on temperatures below 95 degrees F (35 degrees C).
D. Single temperature thermostat or EMS sensor/controller on steam heating line de-energizes unit on temperatures below 200 degrees F. (93 degrees C.)
E. Single temperature room thermostat or EMS sensor/controller set at 68 degrees F (20 degrees C) maintains constant space temperature by cycling unit fan motor and energizing electric heating elements. Integral thermostat continues fan operation until element temperature falls below 100 degrees F (38 degrees C).
F. Single temperature room thermostat or EMS sensor/controller set at 68 degrees F (20 degrees C) maintains constant space temperature by cycling unit fan motor and firing gas burner.
G. Automatic Start Capabilities: Controls shall be capable of automatically adjusting the daily start time of the HVAC system in order to bring each space to the desired occupied temperature immediately prior to scheduled occupancy.

3.21 EXHAUST FANS
A. General building exhaust fans
1. Time Schedule: Start and stop exhaust fan based on the programmed time schedule as determined by the Owner's operating personnel.
B. Specific purpose exhaust fans shall be interlocked with the respective equipment as indicated on the Drawings. Provide necessary sensors and relays to allow control system to accurately sense equipment operation and activate fan systems accordingly. Interlock make up air units/fans and air handling systems providing make up air for exhaust systems as required to provide 100% make up air to all operating exhaust fans.

3.22 MAKE UP AIR UNITS/FANS
A. Time Schedule: Start and stop make up air fans based on the programmed time schedule as determined by the Owner's operating personnel.
B. Maintain the integrity of the packaged control equipment and sequences. The packaged unit controls shall operate such functions as the burner modulation, high limit and low limit safeties, etc. All set point, occupancy, staging and shutdown capabilities shall be controlled by the temperature control system.
C. The control system shall monitor and indicate at the operators console the status of the unit including:
1. System on/off status.
2. System operating mode (heating/cooling/ventilation).
3. Discharge air temperature.
4. Discharge air temperature setpoint (where applicable).
D. Control system shall be able to control any of the following functions:
1. Turn the system on or off.
2. Control the number of stages of heating or cooling (if any) to be utilized based on room or duct temperature conditions.
3. Change occupied or unoccupied temperature setpoints.
4. Change equipment operating mode (heating/cooling/off).
5. Modify occupancy schedules by unit.
E. Single temperature duct thermostat or EMS sensor/controller, set at 60 degrees F (15 degrees C), maintains constant discharge temperature by modulating two-way heating coil valve as follows:
1. When outside air temperature is below 40 degrees F (5 degrees C), fully open coil valve to heating regardless of the operating mode of the fan.
2. When fan is running and the outside temperature is below 40 degrees F (5 degrees C), maintain the supply air temperature set point by modulating the face and bypass dampers, leaving the heating coil valve fully open.
3. When fan is running and the outside air temperature is above 40 degrees F (5 degrees C), maintain the supply air temperature setpoint by modulating heating coil valve.
4. When the fan is running and the outside air temperature is above 55 degrees F (12 degrees C) heating coil valve shall be closed and the face and bypass dampers shall be indexed to full bypass.
F. Single temperature duct thermostat or EMS sensor/controller set at 60 degrees F (15 degrees C) maintains constant discharge temperature by staged energizing electric heating elements. Integral thermostat continues fan operation until element temperature falls below 100 degrees F (38 degrees C).
G. Single temperature duct thermostat or EMS sensor/controller set at 60 degrees F (15 degrees C) maintains constant discharge temperature by firing modulating gas burner.
H. Single temperature duct thermostat or EMS sensor/controller set at 80 degrees F (27 degrees C) maintains discharge air temperature by staging refrigeration compressors. Provide unloaders and hot gas bypass on first stage of refrigeration compressors.
I. Single temperature duct thermostat or EMS sensor/controller set at 80 degrees F (27 degrees C) maintains discharge air temperature by modulating chilled water two-way valve.
J. Single temperature duct thermostat or EMS sensor/controller set at 80 degrees F (27 degrees C) maintains discharge air temperature by modulating domestic water two-way valve for evaporative cooling.
K. Freeze Protection: Stop fan and close outside air damper and open heating coil valves (if any) to 100% open if temperature after heating coil is below 37 degrees F (3 degrees C); signal alarm.
L. Maintain constant fresh air duct static pressure to the set point as determined by the fresh air system balancing to maintain the air flows indicated on the drawings. Maintain constant static pressure regardless of the fresh air damper positions by modulating the fresh air fan variable frequency drive speed control. Locate three averaging sensors upstream of the three most remote supply air branch duct take offs to control static pressure. Stage, unload and/or cycle heating/cooling sequences (if any) accordingly.
M. Maintain constant building pressure of 0.05 inches wg (12 Pa) measured at the grade level lobby by modulating the fresh air fan variable frequency drive speed control as required. Provide sufficient time dampening to avoid control system hunting due to the normal opening and closing of doors. Stage, unload and/or cycle heating/cooling sequences (if any) accordingly.

3.23 FRESH AIR FANS
A. Time Schedule: Start and stop fresh air fans based on the programmed time schedule as determined by the Owner's operating personnel.
B. Maintain the integrity of the packaged control equipment and sequences. The packaged unit controls shall operate such functions as the burner modulation, high limit and low limit safeties, etc. All set point, occupancy, staging and shutdown capabilities shall be controlled by the temperature control system.
C. The control system shall monitor and indicate at the operators console the status of the unit including:
1. System on/off status.
2. System operating mode (heating/cooling/ventilation).
3. Discharge air temperature.
4. Discharge air temperature setpoint (where applicable).
D. Control system shall be able to control any of the following functions:
1. Turn the system on or off.
2. Control the number of stages of heating or cooling (if any) to be utilized based on room or duct temperature conditions.
3. Change occupied or unoccupied temperature setpoints.
4. Change equipment operating mode (heating/cooling/off).
5. Modify occupancy schedules by unit.
E. Single temperature duct or room thermostat as indicated, or EMS sensor/controller, set at 68 degrees F (20 degrees C), maintains constant setpoint temperature by modulating two-way heating coil valve as follows:
1. When outside air temperature is below 40 degrees F (5 degrees C), fully open coil valve to heating regardless of the operating mode of the fan.
2. When fan is running and the outside temperature is below 40 degrees F (5 degrees C), maintain the air temperature set point by modulating the face and bypass dampers, leaving the heating coil valve fully open.
3. When fan is running and the outside air temperature is above 40 degrees F (5 degrees C), maintain the air temperature setpoint by modulating heating coil valve.
4. When the fan is running and the outside air temperature is above 55 degrees F (12 degrees C) heating coil valve shall be closed and the face and bypass dampers shall be indexed to full bypass.
F. Single temperature duct or room thermostat as indicated, or EMS sensor/controller set at 68 degrees F (20 degrees C) maintains constant setpoint temperature by cycling unit fan motor and energizing electric heating elements. Integral thermostat continues fan operation until element temperature falls below 100 degrees F (38 degrees C).
G. Single temperature duct or room thermostat as indicated, or EMS sensor/controller set at 68 degrees F (20 degrees C) maintains constant setpoint temperature by cycling unit fan motor and firing gas burner.
H. Single temperature duct or room thermostat as indicated, or EMS sensor/controller set at 80 degrees F (27 degrees C) maintains constant setpoint air temperature by staging refrigeration compressors. Provide unloaders and hot gas bypass on first stage of refrigeration compressors.
I. Single temperature duct or room thermostat as indicated, or EMS sensor/controller set at 80 degrees F (27 degrees C) maintains constant setpoint air temperature by modulating chilled water two-way valve.
J. Single temperature duct or room thermostat as indicated, or EMS sensor/controller or EMS sensor/controller set at 80 degrees F (27 degrees C) maintains setpoint air temperature by modulating domestic water two-way valve for evaporative cooling.
K. Freeze Protection: Stop fan and close outside air damper and open heating coil valves (if any) to 100% open if temperature after heating coil is below 37 degrees F (3 degrees C); signal alarm.
L. Maintain constant fresh air duct static pressure to the set point as determined by the fresh air system balancing to maintain the air flows indicated on the drawings. Maintain constant static pressure regardless of the fresh air damper positions by modulating the fresh air fan variable frequency drive speed control. Locate three averaging sensors upstream of the three most remote supply air branch duct take offs to control static pressure. Stage, unload and/or cycle heating/cooling sequences (if any) accordingly.
M. Maintain constant building pressure of 0.05 inches wg (12 Pa) measured at the grade level lobby by modulating the fresh air fan variable frequency drive speed control as required. Provide sufficient time dampening to avoid control system hunting due to the normal opening and closing of doors. Stage, unload and/or cycle heating/cooling sequences (if any) accordingly.

3.24 CONTROL OF PACKAGED HVAC EQUIPMENT CONTAINING FACTORY MOUNTED CONTROLS.
A. Single Zone Systems
1. Time Schedule: Control HVAC equipment based on the programmed time schedule as determined by the Owner's operating personnel. Provide occupied/unoccupied mode control with adjustable night setback of temperatures, where applicable.
2. Maintain the integrity of the packaged control equipment and sequences. The packaged unit controls shall operate such functions as the economizer operations, burner modulation, high limit and low limit safeties, etc. All set point, occupancy, staging and shut-down capabilities shall be controlled by the temperature control system.
3. The control system shall monitor and indicate at the operators console the status of the unit including:
a. System on/off status.
b. System on/off command status.
c. Supply fan status.
d. Return fan status (if present).
e. Exhaust fan status (if present).
f. System operating mode (heating/cooling/ventilation).
g. Discharge air temperature.
h. Discharge air temperature setpoint (where applicable).
i. Mixed air temperature.
j. Outdoor air temperature and humidity.
k. Return air temperature and humidity.
l. Space temperature (where applicable).
m. Space temperature setpoint (where applicable).
n. Compressor status, individually by compressor.
4. Control system shall be able to control any of the following functions:
a. Turn the system on or off.
b. Control the number of stages of heating or cooling to be utilized based on room or duct temperature conditions.
c. Change occupied or unoccupied temperature setpoints.
d. Change equipment operating mode (heating/cooling/off).
e. Modify occupancy schedules by unit.
B. Variable Air Volume Systems
1. Time Schedule: Control HVAC equipment based on the programmed time schedule as determined by the Owner's operating personnel. Provide occupied/unoccupied mode control with adjustable night setback of temperatures, where applicable.
2. Maintain the integrity of the packaged control equipment and sequences. The packaged unit controls shall operate such functions as the economizer operations, burner modulation, high limit and low limit safeties, fan speed control, etc. All set point, occupancy, staging and shut-down capabilities shall be controlled by the temperature control system.
3. The control system shall monitor and indicate at the operators console the status of the unit including:
a. System on/off status.
b. System on/off command status.
c. Supply fan status.
d. Supply fan static pressure.
e. Supply fan static pressure setpoint.
f. Return fan status.
g. Return fan static pressure (if present).
h. Return fan static pressure setpoint (if present).
i. Exhaust fan status.
j. System operating mode (heating/cooling/ventilation).
k. Discharge air temperature.
l. Discharge air temperature setpoint (where applicable).
m. Mixed air temperature.
n. Outdoor air temperature and humidity.
o. Return air temperature and humidity.
p. Compressor status, individually by compressor.
4. Control system shall be able to control any of the following functions:
a. Turn the system on or off.
b. Control the number of stages of heating or cooling to be utilized based on room or duct temperature conditions.
c. Change occupied or unoccupied temperature setpoints.
d. Change discharge setpoints.
e. Change static pressure setpoints.
f. Change equipment operating mode (heating/cooling/off).
g. Modify occupancy schedules by unit.
C. Variable Volume and Temperature Systems
1. Time Schedule: Control HVAC equipment based on the programmed time schedule as determined by the Owner's operating personnel. Provide occupied/unoccupied mode control with adjustable night setback of temperatures, where applicable.
2. Maintain the integrity of the packaged control equipment and sequences. The packaged unit controls shall operate such functions as the economizer operations, burner modulation, high limit and low limit safeties, etc. All set point, occupancy, staging and shut-down capabilities shall be controlled by the temperature control system.
3. The control system shall monitor and indicate at the operators console the status of the unit including:
a. System on/off status.
b. System on/off command status.
c. Supply fan status.
d. System operating mode (heating/cooling/ventilation).
e. Discharge air temperature.
f. Discharge air temperature setpoint (where applicable).
g. Mixed air temperature.
h. Outdoor air temperature and humidity (where applicable).
i. Return air temperature and humidity.
j. Space temperature (where applicable).
k. Space temperature setpoint (where applicable).
l. Compressor status, individually by compressor (where applicable).
4. Control system shall be able to control any of the following functions:
a. Turn the system on or off.
b. Control the number of stages of heating or cooling to be utilized based on room or duct temperature conditions.
c. Change occupied or unoccupied temperature setpoints.
d. Change equipment operating mode (heating/cooling/off)
e. Modify occupancy schedules by unit.
5. Variable Air Volume and Temperature (VVT) Sequence of Operation:
a. The VVT monitor thermostat shall determine the demand for heating or cooling based on the number of zones calling or the greatest demand for a particular mode. The VVT monitor thermostat will establish the zone with the greatest demand as the Reference Zone.
b. The VVT monitor thermostat shall communicate with its zone controllers and bypass controller on a communication bus network.
c. The VVT monitor thermostat shall access zone demand for heating and cooling from each zone slave thermostat and use this information to control the HVAC unit based on zone demand.
d. When any thermostat senses a temperature deviation of 1.5 degrees F or more from its current set point, it becomes a zone heating or cooling caller. When a zone becomes a caller, the monitor thermostat registers its demand and its heating or cooling caller status. When the monitor thermostat registers the minimum required number of zone callers (programmable), as determined by the system mode demand, a mode is selected. The mode selected shall meet all lockout temperature criteria (if applicable). The monitor thermostat shall energize that specific mode.
e. Cooling Operation Staging Control: On a rise in space temperature of 1.5 degrees F or greater than the cooling setpoint of the reference zone, the monitor thermostat shall energize first stage cooling operation. On a rise in space temperature of 2 degrees F or greater than the cooling setpoint of the reference zone, the monitor thermostat shall energize second stage cooling operation if the temperature trending program allows second stage cooling operation. When demand falls to within 1.0 degrees F of the reference zone setpoint, the second stage is released. When demand falls to within 0.5 degrees F of the reference zone setpoint, the first stage is released.
f. Heating Operation Staging Control: On a decline in space temperature of 1.5 degrees F or greater than the heating setpoint of the reference zone, the monitor thermostat shall energize first stage heating operation. On a decline in space temperature of 2 degrees F below the heating setpoint of the reference zone, the monitor thermostat shall energize second stage heating operation if the temperature trending program allows second stage heating operation. Upon decline in demand to within 1.0 degrees F of the reference zone setpoint, the second stage is released. When demand declines to within 0.5 degrees F of setpoint, the first stage is released.
g. The monitor thermostat shall hold the system mode until the Reference Zone is within 0.5 degrees F of its set point or until the system mode reselect time limit has expired and the system demand is such that the monitor thermostat selects the opposite mode.
h. The bypass controller shall pre-position its damper(s) to the maximum open position prior to system start-up. The bypass controller shall regulate pressure from minimum system pressure during start-up to maximum system pressure during normal operating conditions. The bypass controller shall monitor supply-air temperature. During changeover mode, the bypass controller shall open the bypass dampers to pre-condition the supply air if it is needed by the Reference Zone.
i. The individual zone controllers shall be capable of operating in the ventilation mode until the zone becomes 1.5 degrees F out of set point in either direction. At this point the zone controller shall request the appropriate mode from the monitor thermostat.
j. Automatic Start Capabilities: Controls shall be capable of automatically adjusting the daily start time of the HVAC system in order to bring each space to the desired occupied temperature immediately prior to scheduled occupancy.

3.25 HEAT PUMP SYSTEMS
A. Heat Exchanger: When the heat pump return water temperature rises above 90 degrees F (32 degrees C), the two position diverter valve shall position to divert heat pump return water through the heat exchanger and the condenser water pump shall start. Upon a shut down signal from the program clock or EMS controller, or a reduction in the heat pump return water temperature to below 85 degrees F (29 degrees C) all equipment (condensing water pump, cooling tower) shall stop and the diverter valve shall bypass the heat exchanger. Water temperatures above 105 degrees F (40 degrees C) or below 45 degrees F (7 degrees C) shall signal an alarm.
B. Condensing Water Pumps: Allow start on proof of water in cooling tower sump and on outdoor temperature above 32 degrees F (0 degrees C). A temperature controller sensing condenser supply water temperature to the building shall modulate the variable speed pump from 10% to 100% speed as required to maintain a condenser water supply temperature of 82 degrees F (28 degrees C) adjustable as first stage cooling. Second stage cooling shall modulate the cooling tower fan as indicated below. Alternate duty between condensing water pumps and log hours of operation separately for each pump. Upon failure of one pump, the system shall report an alarm condition and automatically start the alternate pump.
C. Heat Pump Loop Pumps: Heat pump loop variable speed pumps shall be controlled by system differential pressure. Alternate duty between heat pump loop water pumps and log hours of operation separately for each pump. Upon failure of one pump, the system shall report an alarm condition and automatically start the alternate pump. Refer to "Hydronic Pressure Control" sequence for variable speed operation of the Heat Pump Loop Pumps.
D. Cooling Tower: A temperature controller sensing condenser supply water temperature to the building shall control the cooling tower fan. Controller shall modulate the variable speed fan to maintain 82 degrees F (28 degrees C) condenser water supply temperature. The cooling tower fan shall not run unless the condenser water pump is running.
E. Heating Water Supply System: The boilers shall be provided with multi-stage controllers to individually fire the boilers as required to maintain a supply water temperature of 180 degrees F (82 degrees C) in the HWS loop during the heating season. One of the HWS pump shall run continuously during the heating season and be shut down at outdoor temperatures above 50 degrees F (10 degrees C). The boilers shall be locked out when the HWS pump is not operating. The two HWS pumps shall be arranged for alternating duty by the EMS computer. The run time of each pump shall be individually logged and reported at the operator's console.
F. Heat Pump Return Temperature: Controller in heat pump return water shall modulate the three-way diverter valve in the heating water supply system to maintain minimum 70 degrees F (21 degrees C) heat pump supply water temperature. Upon a shut down signal from the DDC controller the control valve shall bypass the heat pump loop water.
G. Heat Pump Unit Controls: Control system for the individual heat pump units shall be furnished by the equipment manufacturer. The program clock or energy management functions listed below must be integrated with the packaged controls furnished by the heat pump manufacturer. During the occupied mode as indicated by the program clock or EMS controller, the unit shall provide heating and cooling functions as specified by the unit manufacturer. During the unoccupied mode, the unit shall provide heating only at the night setback temperature as set by the room set/back thermostat or EMS sensor/controller. Heat pump control (heat, cool, occupied or unoccupied) shall be individually addressable for each heat pump unit. Heat pump supply fans shall run continuously during the occupied mode. This feature shall be individually programmable for each heat pump.
H. Heat Pump Unit Controls - Economizer and Demand Control Ventilation: Unit control shall be as specified in the Heat pump Unit specification. In addition to the standard unit controls, the Temperature Control Contractor shall provide control of a modulating, enthalpy controlled outdoor air economizer. During the occupied mode as indicated by the from the program clock or EMS controller, the return air, relief air and fresh air dampers shall be modulated in sequence in response to the cooling requirements of the space and the outdoor air enthalpy as compared to the return air enthalpy (differential enthalpy control). Fresh air damper shall modulate from the minimum position as indicated on the drawings to 100% outdoor air during economizer mode. The fresh air damper shall also modulate based on input from the carbon dioxide sensor located in the return duct. The minimum outdoor airflow rate is established by the required outdoor airflow with no occupants and the required outdoor airflow at design occupancy. The damper positions corresponding to these two airflow rates shall be set in conjunction with the balance contractor. The outdoor air damper shall modulate between the no occupants position and the design occupancy position as the space $CO_2$ concentration varies from 400 ppm (ambient) to 1,500 ppm (adjustable). If $CO_2$ concentration exceeds 1,500 ppm (adjustable), signal an alarm. Damper position shall not exceed 15% during heating mode unless the unit is equipped with a pre-heat coil upstream of the heat pump unit inlet. During the unoccupied mode, the fresh air and relief air dampers shall close and the unit shall provide heating only duty as controlled from the program clock or DDC sensor and controller. The Temperature Control Contractor shall coordinate with the Fire Alarm Contractor for proper connection of smoke shutdown detectors and relays.
I. Geothermal Well Field Monitoring: Provide BTU meters at inlet and outlet of Geothermal well field piping in mechanical room and log information to EMS system.
J. Automatic Start Capabilities: Controls shall be capable of automatically adjusting the daily start time of the HVAC system in order to bring each space to the desired occupied temperature immediately prior to scheduled occupancy.

3.26 SMOKE EVACUATION AND CONTROL SYSTEMS
A. The Mechanical Contractor shall furnish and install all air handling equipment and dampers required by the system. The Electrical Contractor will furnish and install power supply circuits and motor starting units for all motors in the system and power to all panels and control systems. The Fire Alarm Contractor will be responsible for all detection, initiation and control circuits from the smoke or water flow detection devices to the control circuits of the motor starting units and damper operators for all system components. All sequence and logic components shall be furnished and installed by the Fire Alarm Contractor. The Temperature Control Contractor shall coordinate with the mechanical contractor to ensure interlock of all dampers with their respective exhaust and supply fans.

3.27 STAIRWAY PRESSURIZATION SYSTEMS
A. The Mechanical Contractor shall furnish and install all air handling equipment and dampers required by the system. The Electrical Contractor will furnish and install power supply circuits and motor starting units for all motors in the system and power to all panels and control systems. The Fire Alarm Contractor will be responsible for all detection, initiation and control circuits from the smoke or water flow detection devices to the control circuits of the motor starting units and damper operators for all system components. All sequence and logic components shall be furnished and installed by the Fire Alarm Contractor. The Temperature Control Contractor shall coordinate with the mechanical contractor to ensure interlock of all dampers with their respective exhaust and supply fans.

3.28 WATER METERING AND BILLING SOFTWARE
A. Provide a complete software package to electronically monitor the water usage of each Tenant water meter and all Landlord water meters as indicated on the drawings or required for the number of Tenant bays indicated on the leasing drawings. The system shall provide the following minimum functions:
1. Real-time device metering information, event information and historical profile data. The software shall support the number of devices required to service all Tenant spaces and all Landlord/House water meters, plus the capacity to add at least 20% additional devices.
2. The software shall allow users to be granted privileges based on their user ID and password, to perform various functions in the system including configuration and billing functions.
3. The software shall create graphical load profiles from historical data. Data shall be able to be displayed from individual meters, or user defined groups of meters.
4. The software shall provide tools to manage the historical database files by providing a means to archive and restor historical data.
5. The software shall include the capability to create user selected name tags for each meter in the system.
6. Provide automated billing software that allows the user to allocate the water consumption costs. Cost allocation shall be based on cubic feet of usage. In addition, the water billing system shall provide the following minimum features:
a. The water billing system shall allow the generation of individual water bills by distributing utility costs for the water usage to user defined "customers" including the ability to add capital cost or other allocated additional costs in either fixed monthly charges or percentage mark-ups within the system, based on a user configured customer billing parameters table.
b. The billing system shall produce professional quality, accurate bills and/or reports using the information collected from the water usage meters automatically, once all billing parameters and meter assignments have been set in the system.
c. The billing system shall support multiple utility rate structures, individually assignable by customer.
d. The billing system shall allow optional utility charges such as sewer use fees, taxes, adjustments, etc. to be allocated to the customers.
e. The billing system shall save data in an industry standard database system for future use and processing.
f. The billing system shall provide an export feature to export customer bills and or reports to Microsoft Excel and Word program formats.

3.29 NATURAL GAS METERING AND BILLING SOFTWARE
A. Provide a complete software package to electronically monitor the natural gas usage of each Tenant gas meter and all Landlord gas meters as indicated on the drawings or required for the number of Tenant bays indicated on the leasing drawings. The system shall provide the following minimum functions:
1. Real-time device metering information, event information and historical profile data. The software shall support the number of devices required to service all Tenant spaces and all Landlord/House natural gas meters, plus the capacity to add at least 20% additional devices.
2. The software shall allow users to be granted privileges based on their user ID and password, to perform various functions in the system including configuration and billing functions.
3. The software shall provide tools to manage the historical database files by providing a means to archive and restore historical data.
4. The software shall create graphical load profiles from historical data. Data shall be able to be displayed from individual meters, or user defined groups of meters.
5. The software shall include the capability to create user selected name tags for each meter in the system.
6. Provide automated billing software that allows the user to allocate the natural gas consumption costs. Cost allocation shall be based on a per 1000 cubic feet or per MBH of usage, depending on the rate schedules selected. In addition, the natural gas billing system shall provide the following minimum features:
a. The natural gas billing system shall allow the generation of individual natural gas bills by distributing utility costs for the natural gas usage to user defined "customers" including the ability to add capital cost or other allocated additional costs in either fixed monthly charges or percentage mark-ups within the system, based on a user configured customer billing parameters table.
b. The billing system shall produce professional quality, accurate bills and/or reports using the information collected from the natural gas consumption meters automatically, once all billing parameters and meter assignments have been set in the system.
c. The billing system shall support multiple utility rate structures, individually assignable by customer.
d. The billing system shall allow optional utility charges such as capital facility fees, taxes, adjustments, etc. to be allocated to the customers.
e. The billing system shall save data in an industry standard database system for future use and processing.
f. The billing system shall provide an export feature to export customer bills and or reports to Microsoft Excel and Word program formats.

**END OF SECTION**

RELEASE FOR CONSTRUCTION
AS NOTED ON PLANS REVIEW
DEVELOPMENT SERVICES
LEE'S SUMMIT, MISSOURI
03/10/2021

Bergmeyer
BOS - 51 Sleeper St. 6th Floor Boston, MA 02210 617.542.1025
LA - 800 South Figueroa St. Suite 1080 Los Angeles, CA 90017 212.337.1090
www.bergmeyer.com

CONSULTANTS:
Schnackel engineers
800-581-0963
www.schnackel.com
SE JOB#: 200383

SEAL/ SIGNATURE:
STATE OF MISSOURI
GREGORY ROY SCHNACKEL
NUMBER E-026570
REGISTERED PROFESSIONAL ENGINEER
Date: 03/05/21
COA #: E-2009006642

| NO. | BY | DATE | DESCRIPTION |
|---|---|---|---|
| 1 | | 2021-03-09 | ADDENDUM #1 |
| | | 2021-01-11 | PERMIT/BID SET |
| | | 2020-12-21 | 75% SET |
| | | 2020-10-12 | DD SET |

SHAKE SHACK

SHAKE SHACK - LEE'S SUMMIT MO

LEE'S SUMMIT
MISSOURI
SHACK #1348

PERMIT/BID SET

MECHANICAL SPECIFICATIONS

DRAWN BY: RAS
CHECKED BY: GRS
JOB NO: 20068.00

M593

CODE: 2018 INTERNATIONAL MECHANICAL CODE

## DINING - RTU-2

| ROOM # | NAME | Az AREA (FT2) | TABLE 403.3.1.1 OCCUPANCY CATEGORY | TABLE 403.3.1.1 Rp PEOPLE OA (CFM/PER) | TABLE 403.3.1.1 Ra AREA OA (CFM/FT2) | TABLE 403.3.1.1 OCCUPANT DENSITY (#/1000 FT2) | Pz (#) | Rp*Pz | Ra*Az | Vbz (CFM) | TABLE 403.3.1.1.2 Ez | Voz (CFM) | Vpz MAX SUPPLY (CFM) | Vpzm MIN SUPPLY (CFM) | Zp | INTERPOLATED TABLE 403.3.1.1.2.3.2 Ev |
|---|---|---|---|---|---|---|---|---|---|---|---|---|---|---|---|---|
| 101 | QUEUING | 336 | SALES | 7.5 | 0.12 | 15 | 8 | 60 | 40 | 100 | 0.80 | 125 | 695 | 695 | 0.180 | 0.97 |
| 102 | DINING | 817 | CAFETERIA/FAST FOOD DINING | 7.5 | 0.18 | 100 | 70 | 525 | 147 | 672 | 0.80 | 840 | 4055 | 4055 | 0.207 | 0.94 |
| 104 | CORRIDOR | 89 | CORRIDORS | 0.0 | 0.06 | 0 | 0 | 0 | 5 | 5 | 0.80 | 7 | 50 | 50 | 0.134 | 1.00 |
| 105 | WOMENS RESTROOM | 141 | NO LISTING | 0.0 | 0.00 | 0 | 0 | 0 | 0 | 0 | 0.80 | 0 | 100 | 100 | 0.000 | 1.00 |
| 106 | MENS RESTROOM | 110 | NO LISTING | 0.0 | 0.00 | 0 | 0 | 0 | 0 | 0 | 0.80 | 0 | 100 | 100 | 0.000 | 1.00 |
| 111 | VESTIBULE | 71 | CORRIDORS | 0.0 | 0.06 | 0 | 0 | 0 | 4 | 4 | 0.80 | 5 | 0 | 0 | 0.000 | 1.00 |
| | | 1,564 | | | | | 78 | 585 | 197 | 782 | | 977 | 5000 | 5000 | 0.207 | 0.94 |

OUTDOOR AIR CALCULATIONS PER EQUATION 4-1:

| SYMBOL | VALUE | DESCRIPTION |
|---|---|---|
| Ps = | 78 | SYSTEM POPULATION |
| SPz = | 78 | ZONE POPULATION |
| D = | 1.00 | OCCUPANT DIVERSITY |
| Vou = | 782 | UNCORRECTED OUTDOOR AIR INTAKE |
| Zp (max) = | 0.207 | ZONE PRIMARY OUTDOOR AIR FRACTION (MAXIMUM) |
| Ev = | 0.94 | SYSTEM VENTILATION EFFICIENCY |
| SVpz = | 5000 | ZONE PRIMARY AIRFLOW |
| Vot = | 829 | CODE REQUIRED OUTDOOR AIRFLOW RATE, CFM |
| Vot = | 830 | DESIGN OUTDOOR AIRFLOW RATE, CFM |

## KITCHEN - RTU-1

| ROOM # | NAME | Az AREA (FT2) | TABLE 403.3.1.1 OCCUPANCY CATEGORY | TABLE 403.3.1.1 Rp PEOPLE OA (CFM/PER) | TABLE 403.3.1.1 Ra AREA OA (CFM/FT2) | TABLE 403.3.1.1 OCCUPANT DENSITY (#/1000 FT2) | Pz (#) | Rp*Pz | Ra*Az | Vbz (CFM) | TABLE 403.3.1.1.2 Ez | Voz (CFM) | Vpz MAX SUPPLY (CFM) | Vpzm MIN SUPPLY (CFM) | Zp | INTERPOLATED TABLE 403.3.1.1.2.3.2 Ev |
|---|---|---|---|---|---|---|---|---|---|---|---|---|---|---|---|---|
| 103 | OPEN KITCHEN | 567 | KITCHEN (COOKING) | 7.5 | 0.12 | 20 | 12 | 90 | 68 | 158 | 0.80 | 198 | 3515 | 3515 | 0.056 | 1.00 |
| 107 | WORK ROOM | 686 | NO LISTING | 0.0 | 0.00 | 0 | 7 | 0 | 0 | 0 | 0.80 | 0 | 2180 | 2180 | 0.000 | 1.00 |
| 108 | MANAGERS OFFICE | 74 | OFFICE SPACES | 5.0 | 0.06 | 5 | 2 | 10 | 4 | 14 | 0.80 | 18 | 95 | 95 | 0.190 | 0.96 |
| 113 | UTILITY ROOM | 119 | NO LISTING | 0.0 | 0.00 | 0 | 0 | 0 | 0 | 0 | 0.80 | 0 | 215 | 215 | 0.000 | 1.00 |
| | | 1,446 | | | | | 21 | 100 | 72 | 172 | | 216 | 6005 | 6005 | 0.190 | 0.96 |

OUTDOOR AIR CALCULATIONS PER EQUATION 4-1:

| SYMBOL | VALUE | DESCRIPTION |
|---|---|---|
| Ps = | 21 | SYSTEM POPULATION |
| SPz = | 21 | ZONE POPULATION |
| D = | 1.00 | OCCUPANT DIVERSITY |
| Vou = | 172 | UNCORRECTED OUTDOOR AIR INTAKE |
| Zp (max) = | 0.190 | ZONE PRIMARY OUTDOOR AIR FRACTION (MAXIMUM) |
| Ev = | 0.96 | SYSTEM VENTILATION EFFICIENCY |
| SVpz = | 6000 | ZONE PRIMARY AIRFLOW |
| Vot = | 180 | CODE REQUIRED OUTDOOR AIRFLOW RATE, CFM |
| Vot = | 180 | DESIGN OUTDOOR AIRFLOW RATE, CFM |

1 OUTSIDE AIR CALCULATIONS

## RTU/ACU CONTROL MATRIX

| SETPOINT/CONTROL | RTU-1 KITCHEN | RTU-2 DINING | ACU-1 OFFICE |
|---|---|---|---|
| *SETPOINTS* | | | |
| COOLING - UNOCCUPIED SETPOINT | 75 F | 75 F | 75 F |
| COOLING - UNOCCUPIED SETPOINT | 80 F | 80 F | 80 F |
| HEATING - OCCUPIED SETPOINT | 70 F | 70 F | 70 F |
| HEATING - UNOCCUPIED SETPOINT | 60 F | 60 F | 60 F |
| HUMIDITY SETPOINT | 60% | 60% | 60% |
| --------- | | | |
| *ACCESSORIES* | | | |
| HVAC SYSTEM OCCUPIED/UNOCCUPIED MODE - PROGRAMMABLE THERMOSTAT | YES | YES | YES |
| REMOTE TEMPERATURE SENSOR | YES | YES | NO |
| MOTORIZED OUTDOOR AIR DAMPER | YES | YES | YES |
| INTEGRATED ECONOMIZER | YES | YES | NO |
| ECONOMIZER FAULT DETECTION | YES | YES | NO |
| BAROMETRIC RELIEF | NO | NO | NO |
| POWERED EXHAUST RELIEF | YES | YES | NO |
| DEHUMIDIFICATION (HOT GAS REHEAT) | NO | NO | NO |
| --------- | | | |
| *SUPPLY FAN* | | | |
| ON DURING OCCUPIED MODE | YES | YES | YES |
| CYCLE WITH LOADS DURING OCCUPIED HOURS | YES | YES | YES |
| VARIALBE VOLUME - MODULATE FAN SPEED | YES | YES | YES |
| --------- | | | |
| *SAFETIES AND INTERLOCKS* | | | |
| RETURN AIR SMOKE DETECTOR | YES | YES | NO |
| LOW LIMIT FREEZESTAT | YES | YES | YES |
| FIRE ALARM CONTOL PANEL INTERLOCK | YES | YES | YES |
| KITCHEN EXHAUST SYSTEM INTERLOCK | YES | YES | YES |

## AIR BALANCE SCHEDULE

| EQUIPMENT TAG | SUPPLY AIRFLOW (CFM) | OUTDOOR AIRFLOW (CFM) | RETURN AIRFLOW (CFM) | EXHAUST AIRFLOW (CFM) | OA/SA (%) | REMARKS |
|---|---|---|---|---|---|---|
| RTU-1 | 6,000 | 700 | 5,300 | | 12% | |
| RTU-2 | 5,000 | 1,200 | 3,800 | | 24% | |
| MUA-1 | 2,250 | 2,250 | 0 | | 100% | |
| ACU-1 | 350 | 15 | 335 | | 4% | |
| EF-1 | | | | 1,739 | | |
| EF-2 | | | | 1,739 | | |
| EF-3 | | | | 300 | | |
| TOTAL = | 13,600 | 4,165 | 9,435 | 3,778 | | |
| RESULTING BUILDING PRESSURIZATION = | | | | 387 CFM | | |
| PRESSURIZATION PERCENTAGE = | | | | 2.8 % | | |

## AIR SOURCE HEAT PUMPS

| MARK | LOCATION | SERVES | NOMINAL COOL (TONS) | HEATING AT 47F (MBH) | ELECTRICAL VOLT | PH | MCA | MOCP | SEER /EER | HSPF /COP | MANUFACTURER | MODEL NUMBER | REMARKS |
|---|---|---|---|---|---|---|---|---|---|---|---|---|---|
| ASHP-1 | ROOF | ACU-1 | 0.75 | 10.0 | 208 | 1 | 15.0 | 20 | 19.0/13.0 | 10.0/3.10 | CARRIER | 38MAQ | [1,2] |

REMARKS:
1. PROVIDE EQUIPMENT WITH SCCR GREATER THAN THE AVAILABLE FAULT CURRENT AT THE EQUIPMENT OR UPSTREAM PANELBOARD. REFER TO THE ELECTRICAL ONE LINE DIAGRAM AND PANEL SCHEDULES FOR AVAILABLE FAULT CURRENT AT UPSTREAM PANELBOARD.
2. PROVIDE HAIL GUARD.

## DIFFUSERS, GRILLES AND REGISTERS

| MARK | SERVICE | LOCATION | CEILING TYPE | MOUNTING TYPE | MANUFACTURER | MODEL NUMBER | REMARKS |
|---|---|---|---|---|---|---|---|
| D-1 | SUPPLY | WALL | NA | SURFACE | TITUS | 300RL X X 1 26 | [1,5-7] |
| D-2 | SUPPLY | CEILING | GYP. BOARD | LAY-IN | TITUS | TMSA XX 12x12 3 26 | [1,2,4,6,7] |
| D-3 | SUPPLY | DUCT | NA | SURFACE | TITUS | 300RL X X 1 26 | [1,5-7] |
| D-4 | SUPPLY | CEILING | AC TILE | LAY-IN | TITUS | PAR XX 24x24 3 26 | [1,2,5-7] |
| D-5 | SUPPLY | CEILING | AC TILE | LAY-IN | TITUS | TMSA XX 24x24 3 26 | [1,2,6,7] |
| G-1 | RETURN | WALL | NA | SURFACE | TITUS | 350RL X X 1 26 | [1,5-7] |
| G-2 | EXHAUST | CEILING | GYP. BOARD | SURFACE | TITUS | 50F X X 1 26 | [1,3,5-7] |
| G-3 | RETURN | CEILING | AC TILE | LAY-IN | TITUS | 50F X X 3 26 | [1-3,5,6] |

REMARKS:
1. TITUS IS THE BASE OF DESIGN. KRUEGER, PRICE, NAILOR, CARNES ARE EQUAL. NO EXCEPTIONS.
2. SEE PLAN FOR NECK SIZE.
3. PROVIDE 1/2" X 1/2" X 1" CORE.
4. PROVIDE WITH MODEL TRM FRAME.
5. SEE PLAN FOR SIZE
6. DIFFUSERS SHALL BE PREFINISHED TO MATCH CEILING/WALL/EXPOSED DUCT COLOR. COORDINATE WITH ARCHITECT.
7. PROVIDE DIFFUSERS AND GRILLES WITH NO EXPOSED MOUNTING SCREWS.

## DUCTLESS SPLIT SYSTEMS

| MARK | COOLING NOMINAL (TONS) | COOLING TOT (MBH) | COOLING SEN (MBH) | HEATING OUT (MBH) | SUPPLY AIR (CFM) | FAN (WATT) | ELECTRICAL VOLT | PH | MCA | MOCP | SEER /EER | CARRIER MODEL NUMBER | REMARKS |
|---|---|---|---|---|---|---|---|---|---|---|---|---|---|
| ACU-1 | 0.8 | 10.41 | 8.22 | 10.55 | 353 | 46 | 208 | 1 | 0.2 | NA | 19.0/13.0 | 40MBCQ09 | [1,2] |

REMARKS:
1. PROVIDE CONDENSATE PUMP.
2. INDOOR UNIT POWER PROVIDED FROM OUTDOOR UNIT.

## EXHAUST FANS

| MARK | LOCATION | SERVICE | AIRFLOW (CFM) | EXTERNAL STATIC (IN H20) | SONES | MOTOR DATA FAN (HP) | VOLT | PH | RPM | MANUFACTURER | MODEL NUMBER | REMARKS |
|---|---|---|---|---|---|---|---|---|---|---|---|---|
| EF-1 | ROOF | HOOD 1 | - | - | - | - | - | - | - | HALTON | - | [4] |
| EF-2 | ROOF | HOOD 2 | - | - | - | - | - | - | - | HALTON | - | [4] |
| EF-3 | ROOF | RESTROOMS | 300 | 0.50 | 7.5 | 1/8 | 115 | 1 | 1,550 | GREENHECK | G-095-D | [1-3] |

REMARKS:
1. PROVIDE SOLID STATE SPEED CONTROL.
2. PROVIDE MOTORIZED BACKDRAFT DAMPER.
3. PROVIDE MINIMUM 12 INCH HEIGHT ROOF CURB.
4. REFERENCE HALTON DRAWINGS FOR ADDITIONAL INFORMATION.

## ROOF TOP UNITS

| MARK | COOLING SEN (MBH) | COOLING TOT (MBH) | COOLING COOL (TON) | HEATING IN (MBH) | HEATING OUT (MBH) | SUPPLY AIR (CFM) | EXT. S.P. (IN) | FAN BHP | ELECTRICAL VOLT | PH | MCA | MOCP | WEIGHT (LBS) | SEER /EER | CARRIER MODEL NUMBER | REMARKS |
|---|---|---|---|---|---|---|---|---|---|---|---|---|---|---|---|---|
| RTU-1 | 133.9 | 181.9 | 15 | 400.0 | 324.0 | 6,000 | 0.70 | 2.6 | 208 | 3 | 71.6 | 90 | 2,596 | /12.0 | 48HC17 | [1-10] |
| RTU-2 | 114.6 | 150.3 | 12.5 | 240.0 | 195.0 | 5,000 | 0.70 | 2.2 | 208 | 3 | 64.0 | 80 | 1,974 | /12.2 | 48HC14 | [1-10] |

CARRIER IS THE BASIS OF DESIGN. NO EXCEPTIONS.
COOLING CAPACITIES ARE BASED ON AHRI STANDARD 210/240 OR 340/360: 80°F DB/ 67°F WB INDOOR ENTERING AIR TEMPERATURE, 95°F DB AIR ENTERING OUTDOOR FAN. SCHEDULED UNIT MAY DIFFER FROM AHRI STANDARD CFM.

REMARKS:
1. PROVIDE EQUIPMENT WITH SCCR GREATER THAN THE AVAILABLE FAULT CURRENT AT THE EQUIPMENT OR UPSTREAM PANELBOARD. REFER TO THE ELECTRICAL ONE LINE DIAGRAM AND PANEL SCHEDULES FOR AVAILABLE FAULT CURRENT AT UPSTREAM PANELBOARD.
2. PROVIDE WITH FACTORY INSTALLED DISCONNECT, UNPOWERED CONVENIENCE OUTLET, THROUGH THE BASE ELECTRICAL CONNECTION.
3. PROVIDE WITH 14 INCH HEIGHT ROOF CURB.
4. PROVIDE WITH DRY BULB ECONOMIZER AND POWER EXHAUST.
5. ECONOMIZER SHALL INCLUDE FAULT DETECTION DIAGNOSTICS (FDD). DAMPER LEAKAGE SHALL MEET APPLICABLE ENERGY CODE.
6. PROVIDE WITH CONDENSER COIL HAIL GUARD.
7. DUCT SMOKE DETECTOR ON THE RETURN SIDE DUCT AND SHUTDOWN RELAY SHALL BE FURNISHED BY THE ELECTRICAL CONTRACTOR FOR INSTALLATION BY THE MECHANICAL CONTRACTOR. ALL WIRING SHALL BE BY THE ELECTRICAL CONTRACTOR.
8. UNITS WITH COOLING CAPACITY GREATER THAN OR EQUAL TO 65 MBH SHALL HAVE MULTI-STAGE CAPABILITY PER APPLICABLE ENERGY CODE.
9. ECONOMIZER SHALL MEET ALL LOCAL ENERGY CODE REQUIREMENTS.
10. EQUIPMENT SHALL BE OBTAINED THROUGH SHAKE SHACK NATIONAL ACCOUNT. CONTACT CARRIER CORPORATION FOR PROPOSALS:
BOB ECKWEILER
CARRIER RETAIL STRATEGIC ACCOUNTS
EMAIL: BOB.ECKWEILER@CARRIER.UTC.COM
PHONE: (973) 222-6742

## AIR CURTAINS

| MARK | LENGTH (IN) | AIRFLOW (CFM) | HEATER IN (KW) | HEATER OUT (MBH) | HEATER TEMP RISE (F) | FANS QTY | FANS HP | ELECTRICAL CIRCUIT (QTY) | VOLT | PH | MANUFACTURER | MODEL NUMBER | REMARKS |
|---|---|---|---|---|---|---|---|---|---|---|---|---|---|
| AC-1 | 36.0 | 1,379 | NA | NA | NA | 1 | 1/2 | 1 | 115 | 1 | MARS | STD2 | [1,2] |
| AC-2 | 25.0 | 625 | 6.1 | 20.8 | 31 | 1 | 1/6 | 1 | 208 | 1 | MARS | LPV225 | [1-5] |

REMARKS:
1. PROVIDE AUTOMATIC DOOR SWITCH.
2. PROVIDE UNIT MOUNTED CONTROL PANEL.
3. COORDINATE FINAL COLOR WITH ARCHITECT.
4. MOUNT UNIT FROM CEILING. FIELD COORDINATE WITH ARCHITECT INSTALLATION LOCATION.
5. COORDINATE FINAL COLOR/FINISH WITH ARCHITECT, AS FACTORY PROVIDED COLOR ALTERNATIVES MAY HAVE LONGER LEAD TIMES.

RELEASE FOR CONSTRUCTION
AS NOTED ON PLANS REVIEW
DEVELOPMENT SERVICES
LEE'S SUMMIT, MISSOURI
03/10/2021


Bergmeyer
www.bergmeyer.com
LA - 800 South Figueroa St. Suite 1100 Los Angeles, CA 90017 212.337.1090
BOS - 51 Sleeper St. 6th Floor Boston, MA 02210 617.542.1025

CONSULTANTS:
Schnackel engineers
800-581-0963
www.schnackel.com
SE JOB# 200363


SEAL/ SIGNATURE:
STATE OF MISSOURI
GREGORY ROY SCHNACKEL
NUMBER E-026570
Date: 03/05/21
COA #: E-2009006642

| NO. | BY | DATE | DESCRIPTION |
|---|---|---|---|
| 1 | | 2021-03-09 | ADDENDUM #1 |
| | | 2021-01-11 | PERMIT/BID SET |
| | | 2020-12-21 | 75% SET |
| | | 2020-10-12 | DD SET |

SHAKE SHACK

SHAKE SHACK - LEE'S SUMMIT MO

LEE'S SUMMIT
MISSOURI
SHACK #1348

PERMIT/BID SET

MECHANICAL SCHEDULES

DRAWN BY: RAS
CHECKED BY: GRS
JOB NO: 20068.00

M601

RESERVED FOR DOCUMENT BINDING

## HOOD INFORMATION TABLE

| HOOD NUMBER | HOOD MODEL | EXHAUST AIR FLOW REQUIREMENTS: EXHAUST CFM | T.A.B. PORT STATIC PRESSURE | TOTAL HOOD STATIC PRESSURE | EXHAUST COLLAR: QTY. | LENGTH | WIDTH | GREASE EXTRACTOR: QTY. | SIZE: L | H | TYPE | HOOD CONSTRUCTION | HOOD WEIGHT (LBS) | SUPPLY AIR REQUIREMENTS: SUPPLY CFM | SUPPLY STATIC PRESSURE | SUPPLY COLLAR: QTY. | LENGTH | WIDTH |
|---|---|---|---|---|---|---|---|---|---|---|---|---|---|---|---|---|---|---|
| 1-1 | KVC | 1427 | 0.14" | 0.25" | 1 | 12" | 10" | 5<br>1 | 20"<br>11" | 13"<br>13" | KSA | ALL 18 GA. 304 S.S. | 832 | 1125 | 0.14" | 1 | 25" | 6" |
| 1-2 | KVC | 1626 | 0.18" | 0.30" | 1 | 12" | 11" | 5<br>1 | 20"<br>11" | 13"<br>13" | KSA | ALL 18 GA. 304 S.S. | 832 | 1125 | 0.14" | 1 | 25" | 6" |

TOTAL EXH. CFM = 3053

TOTAL SUPPLY CFM = 2250

## ELECTRICAL CONNECTION SCHEDULE

| CONNECTION # | CONNECTION DESCRIPTION | FROM | TO |
|---|---|---|---|
| E1-H | 120V, 15AMP - HOOD LIGHT POWER - 3 WIRES | BUILDING SOURCE | HOOD 1-1 |
| E2-H | FIELD CONNECTION FOR HOOD LIGHTS | HOOD 1-1 | HOOD 1-2 |
| E3-H | FIELD CONNECTION FOR TEMP SENSORS | HOOD 1-1 | HOOD 1-2 |
| E4-H | 120V/1PH - MOTOR STARTER POWER | BUILDING SOURCE | HOOD 1-1 |
| E5-H | 120V/1PH - MOTOR STARTER POWER | BUILDING SOURCE | HOOD 1-1 |

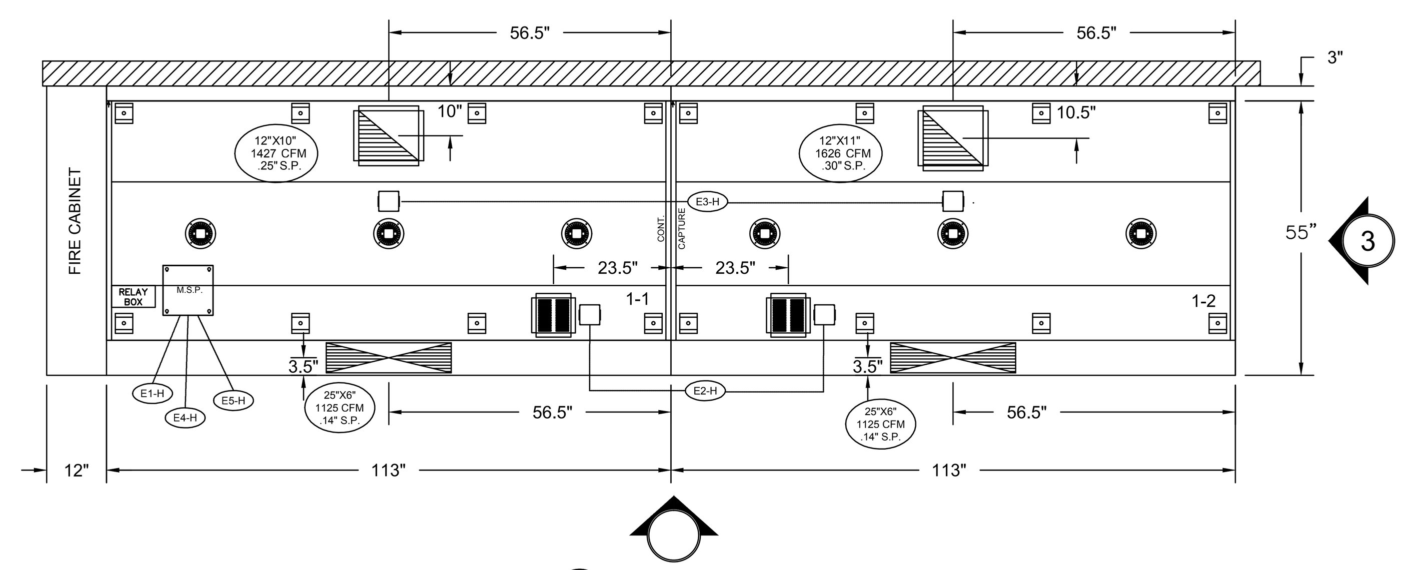


1 ITEM # 1-1, 1-2
PLAN VIEW

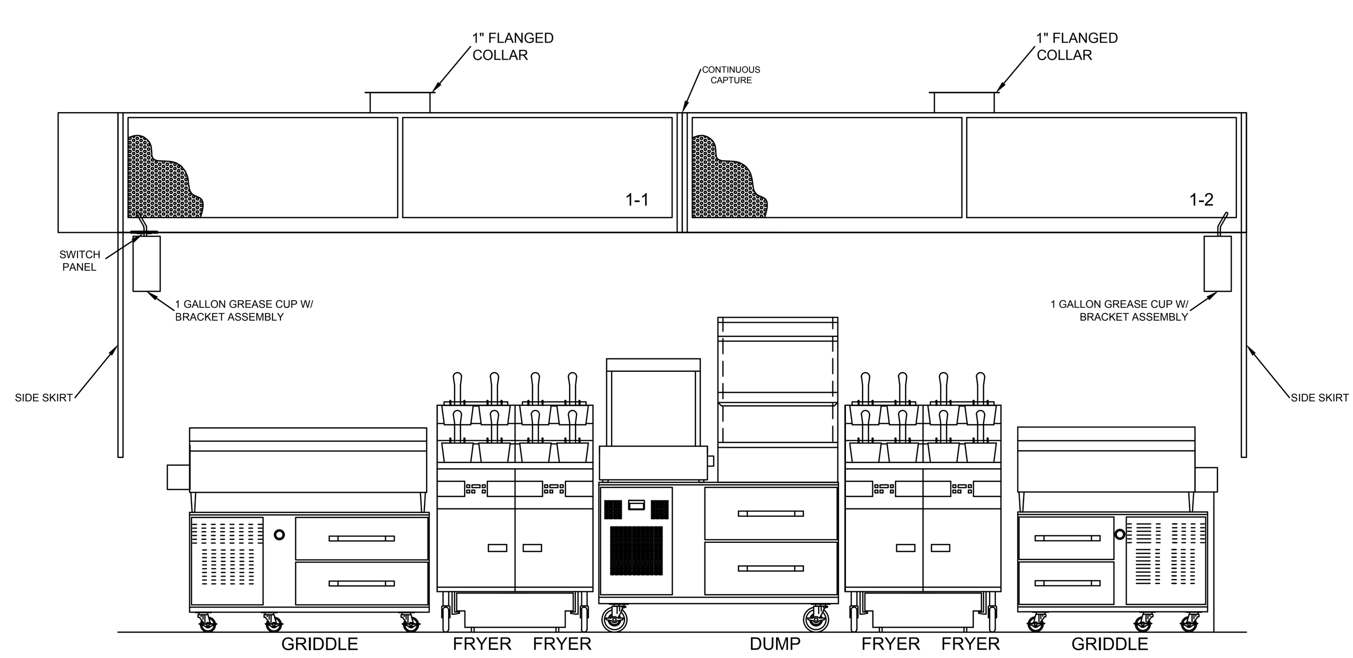


2 ITEM # 1-1, 1-2
ELEVATION VIEW

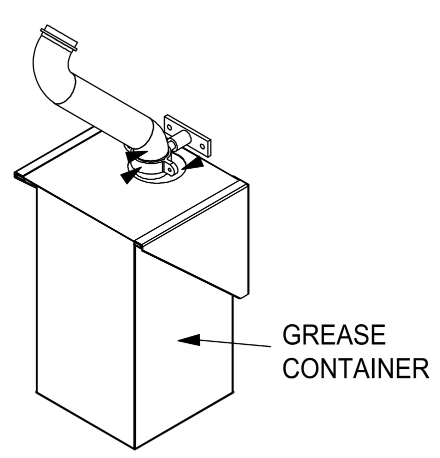


### CAPTURE JET CLEARANCE DETAIL

Capture Jet ® Fan Cover Clearance

Patented Capture Jet ® technology perimeter air jets improve capture and containment of heat and grease emissions. It is very important to leave air space above and around the Capture Jet ® air intake cover on the top of the Halton hood. Please leave 2 inches of clearance on the top and sides of the perforated Capture Jet ® intake cover to allow unimpeded entrance of air into the Capture Jet ® fan.

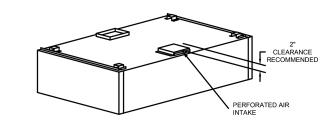


### CEILING CLOSURE PANELS

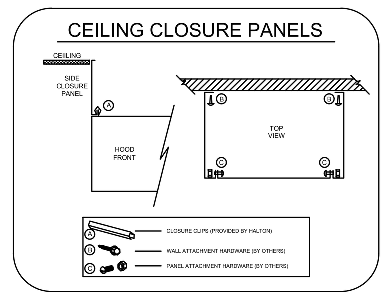


### **NOTE**

THE HOODS SHOWN ON THIS DRAWING IS DESIGNED AS THOUGH A SINGLE EXHAUST FAN WILL BE USED FOR HOOD 1-1 & HOOD 1-2. ONE TIMER PANEL IS REQUIRED PER EXHAUST FAN. IT IS THE RESPONSIBILITY OF THE F.S.E.C. TO INFORM HALTON OF THE NUMBER OF EXHAUST FANS BEING UTILIZED ON THIS PROJECT.

### M.S.P.

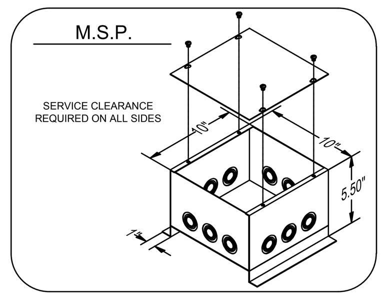


NOTE
T-STAT IS FACTORY PRE-SET FOR 95 DEGREES, IF SPACE CONDITIONS EXCEED 95 DEGREES WITHOUT COOKING TAKING PLACE, THEN A FIELD ADJUSTMENT OF THE T-STAT WILL BE REQUIRED BY PERSONNEL OTHER THAN HALTON. T-STAT IS A SAFETY INTERLOCK ONLY. IT IS NOT INTENDED AS A PRIMARY MEANS OF ENGAGING THE EXHAUST FAN.

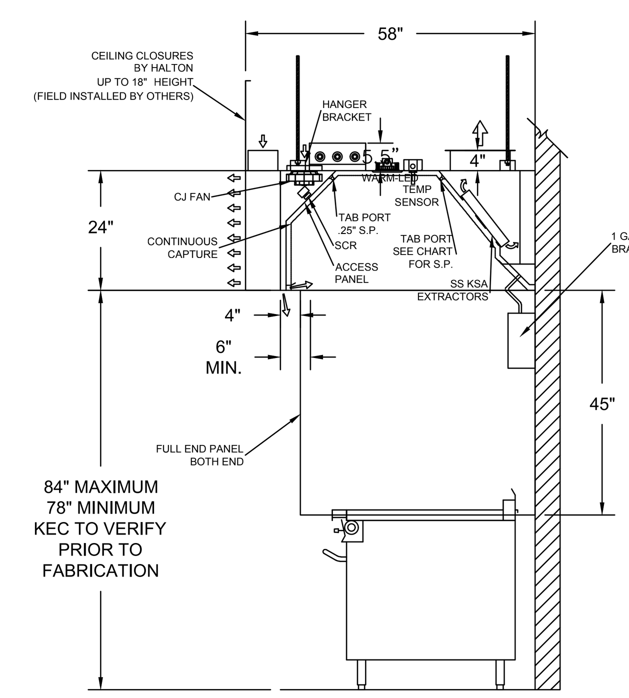


3 ITEM # 1-1, 1-2
SECTION VIEW

### GENERAL SPECIFICATIONS

1- HOOD CONSTRUCTION AND DESIGN MEETS NFPA 96 AND UL 710 STANDARD.

2- HOOD IS NSF AND ETL LISTED UNDER THE FOLLOWING FILE NUMBER: ETL #103143204PRT-001

3- ALL INSTALLATION WORK IS TO BE PERFORMED BY QUALIFIED PERSONS AND IN ACCORDANCE WITH STATE AND LOCAL BUILDING CODE REQUIREMENTS.

4- THE INSTALLATION SHALL BE IN ACCORDANCE WITH NFPA 96, REMOVAL OF SMOKE AND GREASE LADEN VAPORS FROM COMMERCIAL COOKING EQUIPMENT.

5- ALL EXHAUST DUCTWORK AND TRANSITIONS ARE TO BE PROVIDED BY THE HVAC CONTRACTOR.

6- CLEARANCE FROM HOOD AND DUCTS TO COMBUSTIBLE MATERIAL SHALL BE PER APPLICABLE BUILDING CODES.

7- FOR PROPER OPERATION OF THE HOOD SYSTEM, IT IS THE RESPONSIBILITY OF THE GENERAL CONTRACTOR TO HAVE THE HOOD BALANCED AND TESTED TO ENSURE THAT THE EXHAUST AND SUPPLY REQUIREMENTS OF THE HOOD ARE MET.

### INSTALLATION REQUIREMENTS

KITCHEN EQUIPMENT CONTRACTOR'S REQUIREMENTS

1- PROVIDE DRAWINGS TO APPROPRIATE TRADES REFERENCING UTILITY SERVICE AND COORDINATE FINAL CONNECTION.

2- DELIVER, ASSEMBLE AND INSTALL HALTON SYSTEM PER DRAWING.

3- FURNISH WIRING AND PLUMBING DIAGRAMS TO END USER.

4- THE K.E.C MUST INFORM HALTON OF ANY CHANGES IN EQUIPMENT OR BUILDING STRUCTURE. FIELD MODIFICATIONS ARE THE RESPONSIBILITY OF THE K.E.C.

5- IF HALTON MANUAL EXHAUST VOLUME DAMPERS ARE PROVIDED, THE K.E.C. IS RESPONSIBLE FOR THEIR INSTALLATION OR TO MAKE ARRANGEMENTS WITH OTHER TRADES FOR THEIR INSTALLATION.

6- IF HALTON MODEL KVL BACKSHELF STYLE HOODS ARE PROVIDED, THE K.E.C. IS RESPONSIBLE FOR THE INSTALLATION OF THE CAPTURE-JET FAN.

ELECTRICAL CONTRACTOR'S REQUIREMENTS

1- PROVIDE AND CONNECT ALL REQUIRED VOLTAGES, CONNECTORS, WIRING, CONDUIT, ETC., PER NEC AND ALL APPLICABLE LOCAL CODES.

### ELECTRICAL EQUIPMENT REQUIREMENTS

FLUORESCENT LIGHT FIXTURE 40 WATT MAX BULB= .67 AMP EA.

RECESSED INCANDESCENT LIGHT FIXTURE 150 WATT MAX BULB= 1.25 AMP EA.

GLOBE INCANDESCENT LIGHT FIXTURE 100 WATT MAX BULB= .83 AMP EA.

LED LIGHT FIXTURES= .30 AMP EA.

CAPTURE JET FAN= .72 AMP EA

**ALL HOOD CIRCUITS ARE NOT TO EXCEED 15 AMP**

**LIGHT BULBS, IF REQUIRED, ARE TO BE PROVIDED BY OTHERS**

### CEILING HEIGHT NOTE

IF HALTON COMPANY IS TO PROVIDE CEILING CLOSURE PANELS, THE EXACT DIMENSION OF THE FINISHED CEILING HEIGHT MUST BE PROVIDED PRIOR TO RELEASE.

FINISHED CEILING HEIGHT A.F.F.: ______________

THIS DRAWING MUST BE CHECKED, SIGNED AND RETURNED TO THE APPROPRIATE FACTORY. PLEASE VERIFY THE FOLLOWING:

1. ALL DIMENSIONAL INFORMATION, MOUNTING POSITIONS AND CLEARANCES.
2. THE LOCATION AND TYPE OF COOKING EQUIPMENT.

NOTE TO APPROVER
ANY CHANGES IN COOKING EQUIPMENT SUCH AS INCREASED ENERGY INPUTS OR EQUIPMENT POSITION MAY AFFECT EXHAUST AIRFLOW. HALTON MUST BE NOTIFIED IF ANY OF THESE CHANGES OCCUR, A RECALCULATION EXHAUST AIRFLOW MAY BE REQUIRED.

☐ REVISE AND RESUBMIT

APPROVED FOR FABRICATION
☐ WITH NO CHANGES
☐ WITH CHANGES AS NOTED

APPROVED BY ______ DATE ______

COMPLIES WITH LATEST NFPA-96

MAIL APPROVED DRAWINGS TO APPROPRIATE FACTORY BELOW: WEBSITE: www.halton.com

☐ HALTON CO. (CANADA)
1021 BREVIK PLACE
MISSISSAUGA, ON L4W 3R7
1-905-624-0301

☒ HALTON CO. (USA)
101 INDUSTRIAL DRIVE
SCOTTSVILLE, KY 42164
1-270-237-5600

| REV. | REVISION DESCRIPTION | BY | DATE |
|---|---|---|---|
| 1 | CHANGED TO 2 120V INPUTS ON MEP, MOVED GREASE CUPS | SKM | 03.03.21 |
| 2 | | | |
| 3 | | | |
| 4 | | | |
| 5 | | | |
| 6 | | | |
| 7 | | | |

PROJECT: SHAKE SHACK
LOCATION: HINGHAM, MA
DRAWN BY: NC DATE: 12.14.20
SCALE: NOT TO SCALE
CONSULTANT:

Halton

DRAWING TITLE: HOOD DETAILS
DRAWING No.: U20-925
REV. NO.: 1 SHEET NO.: 1 of 5

### CUSTOM wiring of Capture-Jet fan W/HALTON SUPPLIED LIGHT SWITCH

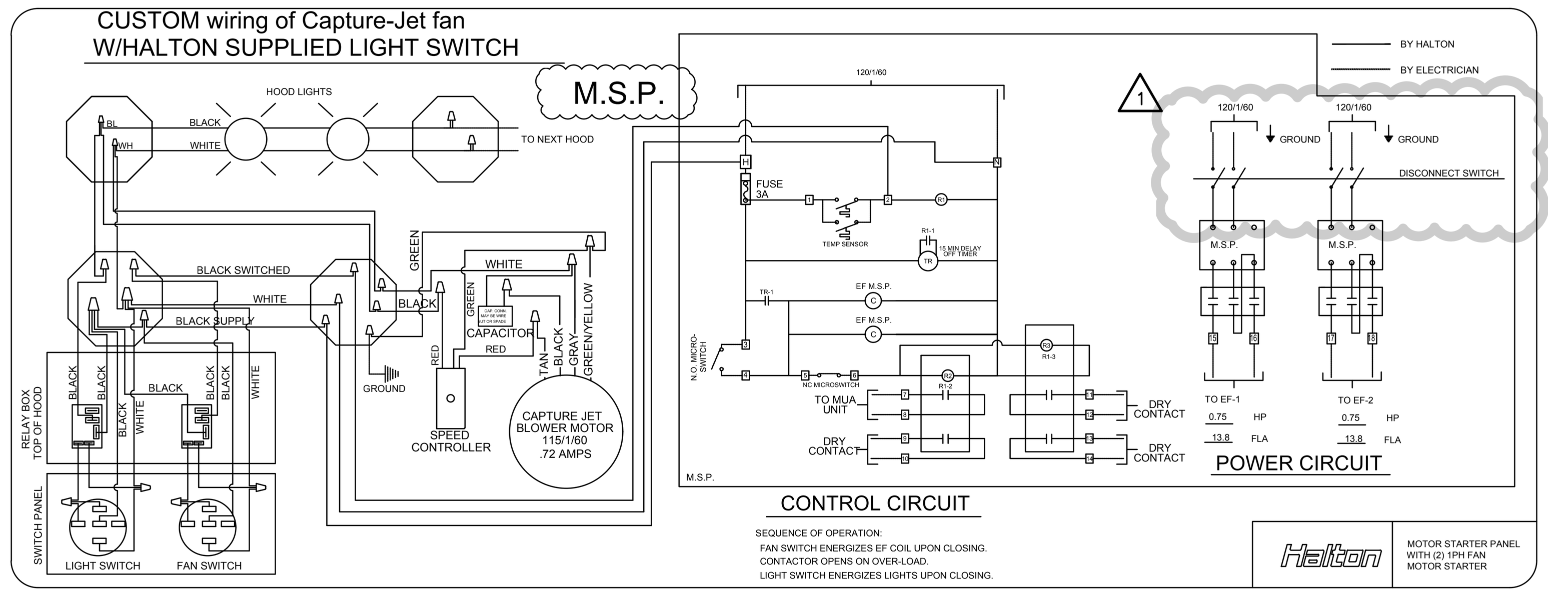


SEQUENCE OF OPERATION:
FAN SWITCH ENERGIZES EF COIL UPON CLOSING.
CONTACTOR OPENS ON OVER-LOAD.
LIGHT SWITCH ENERGIZES LIGHTS UPON CLOSING.

### HANGER BRACKET LAYOUT

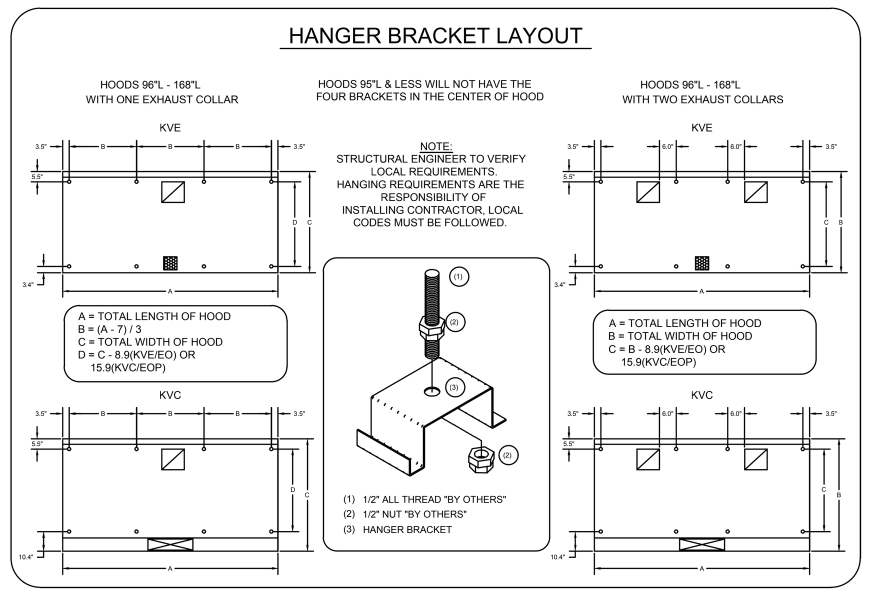


### KSA GREASE EXTRACTOR

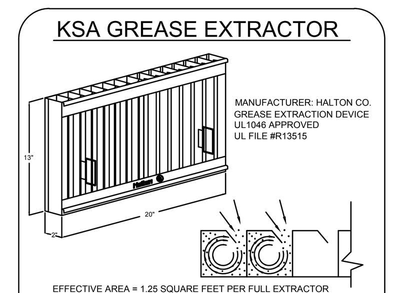


EFFECTIVE AREA = 1.25 SQUARE FEET PER FULL EXTRACTOR
EFFECTIVE AREA = 0.75 SQUARE FEET PER HALF EXTRACTOR
SEE HOOD SUBMITTAL DRAWINGS FOR EXTRACTOR QUANTITY

EXTRACTION OF CONTAMINANTS FROM THE EXHAUST AIR IS PROVIDED BY THE KSA MULTI-CYCLONE GREASE EXTRACTORS. EFFICIENT GREASE EXTRACTION IS ACHIEVED BY FORCING THE EXHAUST AIR TO SPIRAL CONTINUOUSLY IN THE SAME DIRECTION IN THE MULTIPLE CHAMBERS OF THE EXTRACTOR, THUS SEPARATING THE GREASE PARTICLES FROM THE AIR FLOW CENTRIFUGALLY.

HIGH EXTRACTION EFFICIENCY AND LOW PRESSURE LOSS OVER THE KSA REMAIN PRACTICALLY CONSTANT.

### KSA REMOVAL TOOL

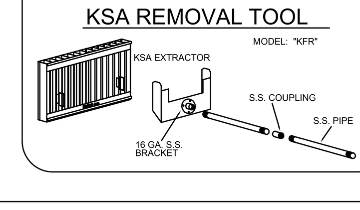


### PERFORMANCE CRITERIA

OTHER MANUFACTURERS WISHING TO OFFER AN ALTERNATE TO THE SPECIFIED MANUFACTURER MUST APPLY FOR PERMISSION TO DO SO IN WRITING FROM THE OFFICE OF THE SPECIFYING CONSULTANT. APPLICATION MUST BE RECEIVED BY THE CONSULTANT AT LEAST TEN WORKING DAYS PRIOR TO THE BID DATE. ANY ALTERNATE SYSTEM MUST MEET CONSTRUCTION AND PERFORMANCE REQUIREMENTS AND EFFICIENCIES AS OUTLINED IN THIS SPECIFICATION.

REQUESTS FOR APPROVAL MUST INCLUDE GREASE FILTRATION PERFORMANCE DATA (MICRON SIZE VS. EXTRACTION EFFICIENCY) AND MANUFACTURERS OWN EXHAUST AIR FLOW CALCULATIONS BASED ON THE CONVECTIVE HEAT LOAD OF COOKING EQUIPMENT BENEATH THE HOOD.

EFFICIENCY COMPARISON DATA TO BE PERFORMED IN ACCORDANCE WITH THE MOST CURRENT ASTM STANDARD F1704 AND INCLUDE RESULTS FOR THE REQUIRED CAPTURE AND CONTAINMENT EXHAUST AIR FLOW IN ACCORDANCE WITH THE "TEST METHOD TO DETERMINE THE THRESHOLD OF CAPTURE AND CONTAINMENT." DATA MUST INCLUDE THERMAL IMAGING RESULTS VALIDATING CONFORMANCE TO ASTM F1704 AND SUPPLY AIR TEMPERATURE REQUIREMENT OF 74°F.

MAKE UP AIR WILL BE CALCULATED SO THAT THE SAME AMOUNT OF AIR WILL BE TAKEN FROM THE ZONE AS IS REQUIRED BY THE SPECIFIED SYSTEM. AN ADDITIONAL LOAD CANNOT BE PLACED ON THE KITCHEN HVAC SYSTEM.

MANUFACTURER MUST PROVIDE A WRITTEN GUARANTEE OF PERFORMANCE, ENSURING THE SPECIFYING ENGINEER THAT THE SYSTEM WILL PERFORM TO THE ENGINEER'S SATISFACTION WHEN INSTALLED AND BALANCED ACCORDING TO DESIGN AIR FLOWS AND RESULTS OF ASTM STANDARD F1704 TEST. (AS DETERMINED BY TAB PORTS AND PRESSURE VS. AIR FLOW CURVES.) CONSULTANT RESERVES THE RIGHT TO REJECT ANY SYSTEM WHICH, WHEN INSTALLED, DOES NOT PROVIDE CAPTURE AND CONTAINMENT AT THE THRESHOLD FLOW RATE DETERMINED IN ASTM F1704. REJECTED SYSTEM MUST BE REPLACED WITH SPECIFIED SYSTEM, WITH ALL REPLACEMENT COSTS PAID BY MANUFACTURER OF REJECTED SYSTEM.

ANY CHANGES IN THE SPECIFIED SIZING OF POWER WIRING, FAN SIZE, HORSEPOWER REQUIREMENTS, OR GAS LINES DUE TO THE USE OF ANY SYSTEM OTHER THAN THAT WHICH IS SPECIFIED IS THE RESPONSIBILITY OF THE ALTERNATE HOOD MANUFACTURER, AND MUST BE COORDINATED BY THE HOOD MANUFACTURER AND CONTRACTORS INVOLVED.

RELEASE FOR CONSTRUCTION
AS NOTED ON PLANS REVIEW
DEVELOPMENT SERVICES
LEE'S SUMMIT, MISSOURI
03/10/2021

Bergmeyer

BOS -
51 Sleeper St.
6th Floor
Boston, MA 02210
617.542.1025

LA -
800 South Figueroa St.
Suite 1080
Los Angeles, CA 90017
212.337.1090

www.bergmeyer.com

CONSULTANTS:
Schnackel engineers
800-581-0963
www.schnackel.com
SE JOB#: 200383

SEAL/ SIGNATURE:
STATE OF MISSOURI
GREGORY ROY SCHNACKEL
NUMBER E-026570
REGISTERED PROFESSIONAL ENGINEER
Date: 03/05/21
COA #: E-2009006642

| NO. | BY | DATE | DESCRIPTION |
|---|---|---|---|
| 1 | | 2021-03-09 | ADDENDUM #1 |
| | | 2021-01-11 | PERMIT/BID SET |
| | | 2020-12-21 | 75% SET |
| | | 2020-10-12 | DD SET |

SHAKE SHACK

SHAKE SHACK - LEE'S SUMMIT MO

LEE'S SUMMIT
MISSOURI
SHACK #1348

PERMIT/BID SET

HALTON DRAWINGS

DRAWN BY: RAS
CHECKED BY: GRS
JOB NO: 20068.00

M701

RESERVED FOR DOCUMENT BINDING

# ANSUL R-102 OVERLAPPING FIRE SUPPRESSION SYSTEM

MOUNTED IN FIRE CABINET:

1 - OEM REGULATED RELEASE
1 - REGULATED ACTUATOR
4 - 3 GALLON TANKS

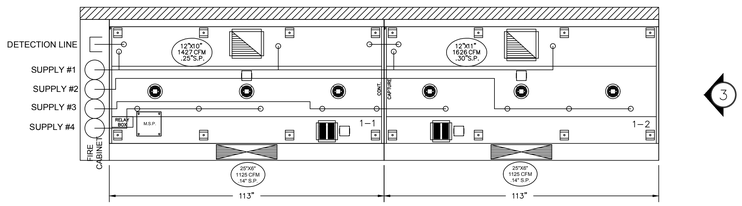


1 ITEM #1 PLAN VIEW

ALL ANSUL DROPS TO HAVE SWIVELS

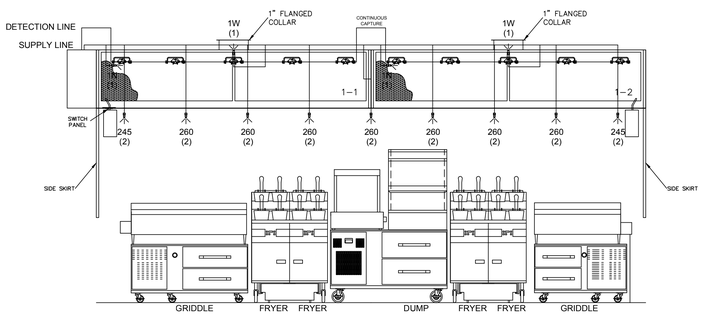


2 ITEM #1 ELEVATION VIEW

NOTE
T–STAT IS FACTORY PRE–SET FOR 95 DEGREES, IF SPACE CONDITIONS EXCEED 95 DEGREES WITHOUT COOKING TAKING PLACE, THEN A FIELD ADJUSTMENT OF THE T–STAT WILL BE REQUIRED BY PERSONNEL OTHER THAN HALTON. T–STAT IS A SAFETY INTERLOCK ONLY. IT IS NOT INTENDED AS A PRIMARY MEANS OF ENGAGING THE EXHAUST FAN.

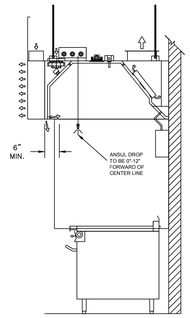


3 ITEM #1 SECTION VIEW

1) ANSUL R-102 FIRE SYSTEM
2) FOUR TANK SYSTEM (12 GALLON)
3) 3/8" BLACK IRON PIPING (CONCEALED)
3/8" S.S. APPLIANCE DROPS (EXPOSED)
4) MECHANICAL GAS VALVE = (ADVISE SIZE)

## FLOW POINT CHART

ANSUL R-102 FLOW POINT CALCULATION

| NOZZLE TYPE | NOZZLE FLOW PT. | NOZZLE QUANTITY | TOTAL FLOW PT. |
|---|---|---|---|
| 3N | 3 | 0 | # |
| 290 | 2 | 0 | # |
| 260 | 2 | 7 | ## |
| 245 | 2 | 2 | # |
| 230 | 2 | 0 | # |
| 2W | 2 | 0 | # |
| 2120 | 2 | 0 | # |
| 1W | 1 | 2 | # |
| 1N | 1 | 2 | # |
| 1F | 1 | 0 | # |
| 1/2N | 1/2 | 0 | # |
| TOTAL FLOW POINTS USED | | | ## |
| MAX. SYSTEM FLOW POINTS: | | | 24 (12 GALLON) |

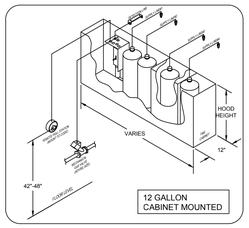


12 GALLON CABINET MOUNTED

## ANSUL NOTES

GENERAL NOTES:

1. THIS INSTALLATION IS TO BE MADE IN ACCORDANCE WITH THE R-102 INSTALLATION MANUAL AND IN ACCORDANCE WITH ALL STATE AND LOCAL CODES.
2. THE WIRE ROPE FOR THE DETECTOR AND REMOTE PULL STATION IS TO BE INSTALLED BY AN AUTHORIZED AND FACTORY TRAINED DISTRIBUTOR OR SERVICE REPRESENTATIVE.
3. THIS INSTALLATION IS TO BE INSPECTED, PUT INTO OPERATION AND CERTIFIED BY AN AUTHORIZED AND FACTORY TRAINED DISTRIBUTOR OR SERVICE REPRESENTATIVE.
4. ELECTRICAL CONTACTS AND WIRING FOR APPLIANCE SHUT OFF TO BE PROVIDED BY THE ELECTRICAL CONTRACTOR.
5. ANSUL R-102 RESTAURANT FIRE SUPPRESSION SYSTEMS HAVE BEEN TESTED AND ARE LISTED BY UNDERWRITERS' LABORATORIES INC. AS PRE-ENGINEERED SYSTEMS, AND WHEN INSTALLED AS SHOWN ON THIS DRAWING SHALL COMPLY WITH ALL RELEVANT ANSUL INSTALLATION RECHARGE INSPECTION AND MAINTENANCE MANUALS AND SHALL COMPLY WITH NFPA 96 WHEN INSTALLED AND CERTIFIED BY AUTHORIZED TRAINED ANSUL DISTRIBUTORS IN ACCORDANCE WITH THE MANUAL.
6. ALL AGENT DISTIBUTION PIPING AND DETECTION CONDUIT HOOD PENETRATIONS MUST BE PROPERLY SEALED IN ACCORDANCE WITH NFPA 96.

DISTRIBUTION PIPING REQUIREMENT NOTES:

1. PIPE SHALL BE 3/8" SCHEDULE 40 BLACK IRON, CHROME PLATED OR STAINLESS STEEL UNLESS OTHERWISE NOTED.
2. FINAL NOZZLE LOCATION MAY NOT VARY FROM LOCATION SHOWN.

## MANUAL PULL DETAIL

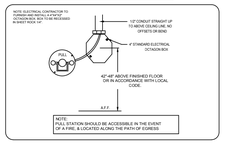


SECTION VIEW

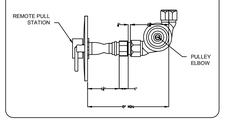


NOTE:

HALTON COMPANY WILL SUPPLY ANSUL COMPONENTS AND PRE-PIPED HOODS PER PUBLISHED ANSUL GUIDELINES AND RECOMMENDATIONS. IT IS THE RESPONSIBILITY OF THE F.S.E.C. TO INFORM HALTON OF ANY SPECIAL REQUIREMENTS OF THE LOCAL JURISDICTION PRIOR TO RELEASE OF EQUIPMENT.

NOTE:

ALL PIPING FOR LOW PROXIMITY APPLIANCE PROTECTION SHALL BE PROVIDED & INSTALLED BY THE INSTALLING ANSUL DISTRIBUTOR & NOT BY HALTON.

NOTE:

HAND HELD EXTINGUISHERS, IF REQUIRED, ARE TO BE PROVIDED BY OTHERS.

## ANSUL MICROSWITCH DETAIL

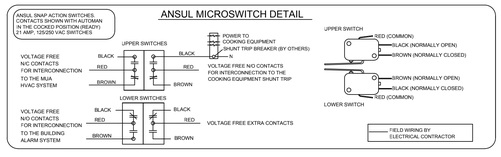


THIS DRAWING MUST BE CHECKED, SIGNED AND RETURNED TO THE APPROPRIATE FACTORY. PLEASE VERIFY THE FOLLOWING:

1. ALL DIMENSIONAL INFORMATION, MOUNTING POSITIONS AND CLEARANCES
2. THE CORRECT TYPE OF COOKING EQUIPMENT.

NOTE TO APPROVER
ANY CHANGES IN COOKING EQUIPMENT SUCH AS INCREASED ENERGY INPUTS OR EQUIPMENT WIDTHS MAY NOT CHANGE THE FIRE SUPPRESSION SYSTEM DESIGN. ANY OF THESE CHANGES OCCUR A RECALCULATION (EXHAUST AIRFLOW) MAY BE REQUIRED.

☐ REVISE AND RESUBMIT

APPROVED FOR FABRICATION
☐ WITH NO CHANGES ☐ WITH CHANGES AS NOTED

APPROVED BY DATE

MAIL APPROVED DRAWINGS TO APPROPRIATE FACTORY BELOW:

HALTON CO. (CANADA)
1021 BREVIK PLACE
MISSISSAUGA, ON L4W 3R7
(905) 624-1301

☒ HALTON CO. (USA)
101 INDUSTRIAL DRIVE
SCOTTSVILLE, KY 42164
(270) 237-5900

WEBSITE: www.halton.com

| REV. | REVISION DESCRIPTION | BY | DATE |
|---|---|---|---|
| 1 | NO CHANGE | | |

PROJECT: SHAKE SHACK
LOCATION: HINGHAM, MA
DRAWN BY: NC DATE: 12.14.20
SCALE: NOT TO SCALE
CONSULTANT:

Halton

DRAWING TITLE: FIRE SYSTEM DETAILS

DRAWING No.: U20-925

REV. NO.: 1 SHEET NO.: 2 of 5

RELEASE FOR CONSTRUCTION
AS NOTED ON PLANS REVIEW
DEVELOPMENT SERVICES
LEE'S SUMMIT, MISSOURI
03/10/2021

Bergmeyer
BOS - 51 Sleeper St. 6th Floor Boston, MA 02210 617.542.1025
LA - 800 South Figueroa St. Suite 1050 Los Angeles, CA 90017 212.337.1090
www.bergmeyer.com

CONSULTANTS:

Schnackel engineers
800-581-0963
www.schnackel.com
SE JOB# 200363

SEAL/ SIGNATURE:

STATE OF MISSOURI
GREGORY ROY SCHNACKEL
NUMBER E-026570
Date: 03/05/21
COA #: E-2009006642

| NO. | BY | DATE | DESCRIPTION |
|---|---|---|---|
| 1 | | 2021-03-09 | ADDENDUM #1 |
| | | 2021-01-11 | PERMIT/BID SET |
| | | 2020-12-21 | 75% SET |
| | | 2020-10-12 | DD SET |

SHAKE SHACK

SHAKE SHACK - LEE'S SUMMIT MO

LEE'S SUMMIT
MISSOURI
SHACK #1348

PERMIT/BID SET

HALTON DRAWINGS

DRAWN BY: RAS
CHECKED BY: GRS
JOB NO: 20068.00

M702

RELEASE FOR CONSTRUCTION
AS NOTED ON PLANS REVIEW
DEVELOPMENT SERVICES
LEE'S SUMMIT, MISSOURI
03/10/2021

## MUA CHART

| DATA | IMPERIAL | METRIC |
|---|---|---|
| Model | MUA-DGX-2800 | |
| Max. Supply Air | 2800 CFM | - l/s |
| Design Supply Air | 2250 CFM | - l/s |
| Internal S.P. | 2.03" W.G. | - PA |
| External S.P. | 0.65" W.G. | - PA |
| Total S.P. | 2.68" W.G. | |
| Motor | 3 hp | |
| Power | 1.36 bhp | |
| Full Load AMPS | 4.8 | |
| Motor RPM | 1800 | |
| Voltage/Phase/HZ | 480/3/60 | |
| Fan RPM | 2032 @ 60 HZ | |
| Mounting | Exterior | |
| Blower Model | ANPA 14 | |
| Material Type | G90 Galv. 20GA. | |
| Paint Color | Unpainted | |
| Weight | 1877 lbs | - kg |

## HEATING INFORMATION

| | | |
|---|---|---|
| Gas Type | Natural | |
| Min. Gas Pressure | 8" W.C. | |
| Max. Gas Pressure | 14" W.C. | |
| Gas Line Size | 1/2" | |
| Discharge Temperature | 85.0°F | |
| Temperature Rise | 79.1°F | |
| Heat Input MBH | 208.9 | |
| Heat Output MBH | 192.2 | |

## COOLING INFORMATION

| | | |
|---|---|---|
| Cooling Coil Inlet DB Temp. | 91.2°F | |
| Cooling Coil Inlet WB Temp. | 73.8°F | |
| Cooling Coil Exit DB Temp. | 64.0°F | |
| Cooling Coil Exit WB Temp. | 63.8°F | |
| Cooling Coil Total Capacity | 67.8 MBH | |
| Cooling Coil Sensible Capacity | 66.1 MBH | |
| Cooling Coil Latent Capacity | 1.7 MBH | |

## STANDARD FEATURES

| | |
|---|---|
| ✓ | 1" Duct Board Insulation Double Wall |
| ✓ | Unit Mounted Controls |
| ✓ | Neoprene Fan Isolators |
| ✓ | Direct Spark Gas Train |
| ✓ | R-410A DX Cooling Coil<br>• Copper Tubes/Aluminum Fins |
| ✓ | Belt Drive Fan (Comefri ATLI) |
| ✓ | Stainless Drain Pan and Drain |

## OPTIONS

| | |
|---|---|
| ✓ | TXV, Filter Dryer, Sight Glass (Shipped Loose) |
| ✓ | Cooling Coil Shipped Charged w/ Nitrogen |
| ✓ | Galvanized Cooling Coil Frame |
| ✓ | Unit Mounted Heat Controls |
| ✓ | Unit Mounted Call for Cooling |
| ✓ | Intake Hood w/ 2" Alum. Mesh Filters & Birdscreen |
| ✓ | MERV 8 Filtered Intake |
| ✓ | Insulated Roof Curb w/ Wood Nailer |
| ✓ | Motorized Intake Damper |
| ✓ | DOWN Discharge |
| ✓ | Variable Speed (Powerflex 523 VFD) |
| ✓ | Cooling Coil Moisture Elimiator |

ITEM #MUA-1

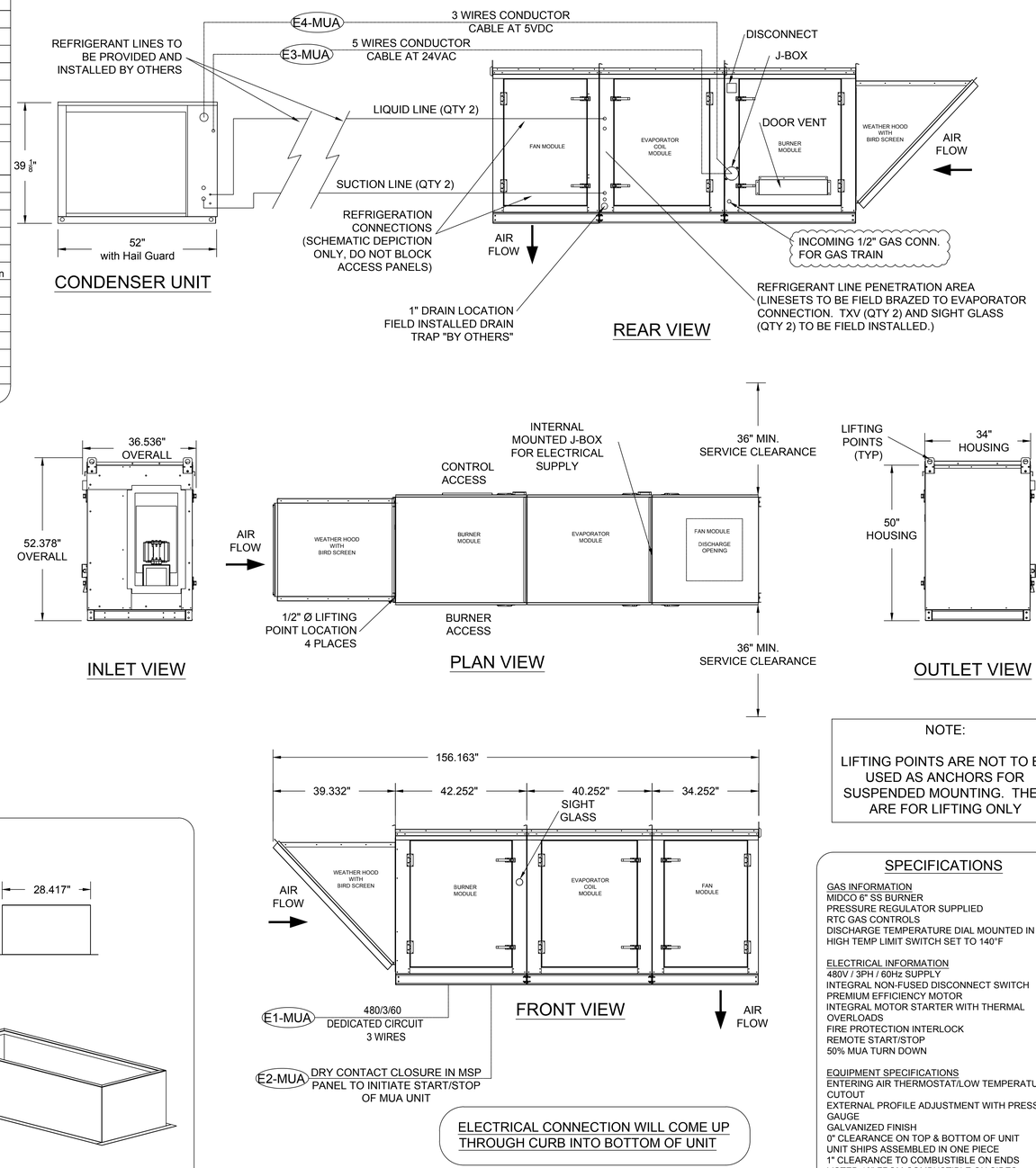


## ELECTRICAL SCHEDULE

| CONNECTION # | CONNECTION DESCRIPTION | FROM | TO |
|---|---|---|---|
| E1-MUA | 208/3/60 - FAN MOTOR POWER - 3 WIRES | BUILDING SOURCE | MUA UNIT |
| E2-MUA | DRY CONTACT CLOSURE PROVIDED BY OTHERS | HOOD 1-1 | MUA UNIT |
| E3-MUA | 5 WIRES CONDUCTOR CABLE - 24VAC | MUA UNIT | CONDENSER UNIT |
| E4-MUA | 3 WIRES CONDUCTOR CABLE - 5VDC | MUA UNIT | CONDENSER UNIT |
| | | | |
| | | | |

ELECTRICAL CONNECTION WILL COME UP THROUGH CURB INTO BOTTOM OF UNIT

NOTE:

LIFTING POINTS ARE NOT TO BE USED AS ANCHORS FOR SUSPENDED MOUNTING. THEY ARE FOR LIFTING ONLY

## ROOF CURB DETAIL

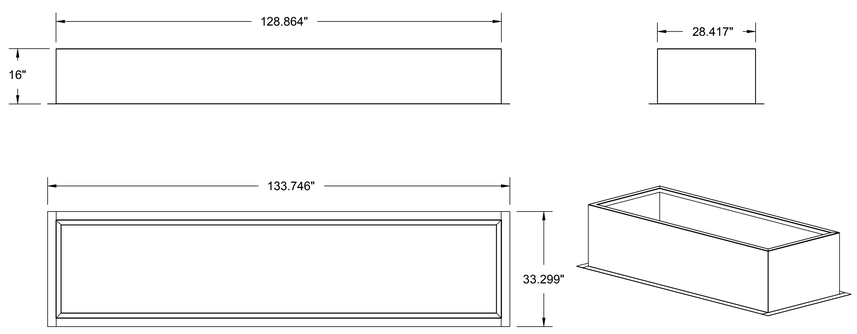


## SPECIFICATIONS

GAS INFORMATION
MIDCO 6" SS BURNER
PRESSURE REGULATOR SUPPLIED
RTC GAS CONTROLS
DISCHARGE TEMPERATURE DIAL MOUNTED IN UNIT
HIGH TEMP LIMIT SWITCH SET TO 140°F

ELECTRICAL INFORMATION
480V / 3PH / 60Hz SUPPLY
INTEGRAL NON-FUSED DISCONNECT SWITCH
PREMIUM EFFICIENCY MOTOR
INTEGRAL MOTOR STARTER WITH THERMAL OVERLOADS
FIRE PROTECTION INTERLOCK
REMOTE START/STOP
50% MUA TURN DOWN

EQUIPMENT SPECIFICATIONS
ENTERING AIR THERMOSTAT/LOW TEMPERATURE CUTOUT
EXTERNAL PROFILE ADJUSTMENT WITH PRESSURE GAUGE
GALVANIZED FINISH
0" CLEARANCE ON TOP & BOTTOM OF UNIT
UNIT SHIPS ASSEMBLED IN ONE PIECE
1" CLEARANCE TO COMBUSTIBLE ON ENDS
LISTED 18" FROM COMBUSTIBLE ON SIDES

THIS DRAWING MUST BE CHECKED, SIGNED AND RETURNED TO THE APPROPRIATE FACTORY. PLEASE VERIFY THE FOLLOWING:
1. ALL DIMENSIONAL INFORMATION, MOUNTING POSITIONS AND CLEARANCES
2. THE COOKING TYPE OF COOKING EQUIPMENT.
NOTE TO APPROVER:
ANY CHANGES IN COOKING EQUIPMENT SUCH AS INCREASED ENERGY INPUTS OR EQUIPMENT CHANGES OCCUR, A RECALCULATION EXPOSING THAT CONDITION MUST BE MADE. ANY OF THESE CHANGES MAY REQUIRE A NEW CONFIGURATION DESIGN AND CANAM REQUIRED.
☐ REVISE AND RESUBMIT
APPROVED FOR FABRICATION
☐ WITH NO CHANGES ☐ WITH CHANGES AS NOTED
APPROVED BY DATE

MAIL APPROVED DRAWINGS TO APPROPRIATE FACTORY BELOW:
☐ HALTON CO. (CANADA) 1021 BREVIK PLACE MISSISSAUGA, ON L4W 3R7 1-905-624-0201
☒ HALTON CO. (USA) 101 INDUSTRIAL DRIVE SCOTTSVILLE, KY 42164 1-270-237-5609
WEBSITE: www.halton.com

| REV. | REVISION DESCRIPTION | BY | DATE |
|---|---|---|---|
| | ADDED E2,3,4 CONNECTIONS | SKM | 03.03.21 |

PROJECT: SHAKE SHACK
LOCATION: HINGHAM, MA
DRAWN BY: NC DATE: 12.14.20
SCALE: NOT TO SCALE
CONSULTANT:
Halton

DRAWING TITLE: MUA-DGX-2800
DRAWING No.: U20-925
REV. NO.: 1 SHEET NO.: 3 of 5

Bergmeyer
BOS - 51 Sleeper St. 5th Floor Boston, MA 02210 617.542.1025
LA - 800 South Figueroa St. Suite 1050 Los Angeles, CA 90017 212.337.1090
www.bergmeyer.com

CONSULTANTS:
Schnackel engineers
800-581-0963
www.schnackel.com
SE JOB# 200363

SEAL/ SIGNATURE:
STATE OF MISSOURI
GREGORY ROY SCHNACKEL
NUMBER E-28570
Date: 03/05/21
COA #: E-2009006642

| NO. | BY | DATE | DESCRIPTION |
|---|---|---|---|
| 1 | | 2021-03-09 | ADDENDUM #1 |
| | | 2021-01-11 | PERMIT/BID SET |
| | | 2020-12-21 | 75% SET |
| | | 2020-10-12 | DD SET |

SHAKE SHACK

SHAKE SHACK - LEE'S SUMMIT MO

LEE'S SUMMIT
MISSOURI
SHACK #1348

PERMIT/BID SET

HALTON DRAWINGS

DRAWN BY: RAS
CHECKED BY: GRS
JOB NO: 20068.00

M703

ITEM #CU-1

TRANE

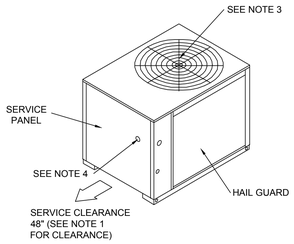


Notes:

1. Acess opening is for field installed Bayloam accessory.
2. Minimum clearance for proper operation is 36" from walls, shrubbery, privacy fences, etc. Minimum clearance between adjacent units is 72". Recommended service clearance is 48".
3. Top discharge area should be unrestricted for 100" minumum. Unit should be placed so roof run-off water does not pour directly on unit.
4. Outdoor Air Temperature Sensor opening (Do Not Block Opening)

Hailguards - TTA
Condenser Coil Protection from Hail, Vandals, Etc. Perforated, Painted Galvanized Steel Factory Installed.
TTA Microchannel - General
Weatherproofed steel mounting/lifting rails Hermetic scroll compressors Microchannel condenser coils on select models Plate fin condenser coils Fans and motors Standard operating range 50-125°F (min. 0°F with low ambient accessory) Nitrogen holding charge Certified and rated in accordance with AHRI and DOE standards Certified to UL 1995
TTA Microchannel - Casing
Zinc coated, heavy gauge, galvanized steel Weather resistant baked enamel finish Meets ASTM B117, 672 hour spray test Removable single side maintenance access panels Lifting handles in maintenance access panels Unit base provisions for forklift and/or crane lifting
Refrigerations System - Dual Compressor
Two (2) separate and independent refrigerant circuits Each refrigeration circuit equiped with integral subcooling circuit Front or rear refrigerant line connections
Two (2) direct drive hermetic scroll compressors Suction gas-cooled motors w/ ± 10% voltage utilization range of unit nameplate voltage Crankcase Heaters Internal temperature and current sensitive motor overloads No compressor suction and/or discharge valves (reduced vibration/sound) Factory installed liquid line filter drier Phase loss/reverse rotation monitor Liquid line service ports Suction line service ports External high pressure cutout devices
TTA Microchannel - Condenser Coil (Microchannel)
Microchannel coils burst tested by the manufacturer Coils shall be leak tested to ensure the pressure integrity Factory pressure and leak tested to 660 psig Perforated steel hail guards factory installed
TTA Microchannel - Condenser Fan
26" or 28" propeller fan(s) Direct drive Statically and dynamically balanced
TTA Microchannel - Condenser Motor(s)
Permanently lubricated totally enclosed or open construction Built-in current and thermal overloads Ball or sleeve bearing type
TTA Microchannel - Controls
Choice of electromechanical or microprocessor Completely internally wired Numbered and colored wires Contactor pressure lugs or terminal block Unit external mounting location for disconnect device Single point power entry
TTA Controls: Electro-Mechanical
24V control circuit Control transformer Thermostat compatible Anti-Short Cycle Timer

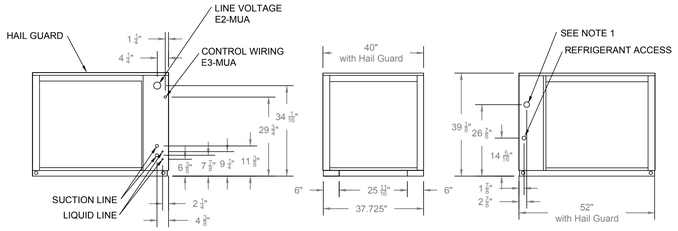


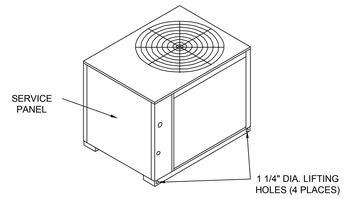


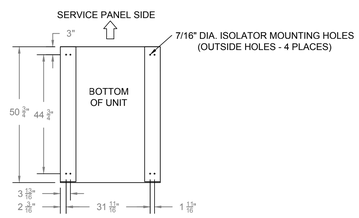


10 TON COOLING CONDENSER (DUAL COMPRESSOR)
DIMENSIONAL DRAWING

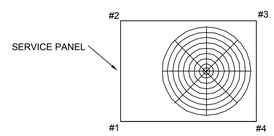


WEIGHTS AND
CORNER WEIGHTS

Shipping: 440.0 lb
Net: 383.0 lb
Corner 1: 115.0 lb
Corner 2: 168.0 lb
Corner 3: 72.0 lb
Corner 4: 52.0 lb

WEIGHTS AND LOAD POINT LOCATION FOR CONDENSER
WEIGHT AND RIGGING

## CONDENSER COIL SPECIFICATIONS

10 Ton Trane TTA 480V

| | |
|---|---|
| Unit Function | Cooling |
| Voltage | 480/60/3 |
| Refrigeration Circuit/Stage | Dual Compressors/Dual Circuit |
| Unit Tonnage | 10 Tons |
| Refrigerant | R-410A Refrigerant |
| Controls | Electromechanical |

Factory Installed Accessories
Condenser Coil Hail/Vandal Guard Kit

Electrical Data Condenser
Electrical Data

| | |
|---|---|
| Model: | TTA12043D |
| Unit Operating Voltage: | 187-253 |
| Minimum Circuit Ampacity: | 41.0 |
| Maximum Fuse Size: | 50.0 |
| Maximum Circuit Breaker: | 50.0 |

Compressor Motor

| | |
|---|---|
| No.: | 2 |
| Volts: | 480 |
| Phase: | 3 |
| Amp-RLA: | 16.2/16.2 |
| Amp-LRA: | 110/110 |

Condenser Fan Motor

| | |
|---|---|
| No.: | 1 |
| Volts: | 480 |
| Phase: | 1 |
| Amp-FLA: | 2.1 |
| Amp-LRA: | 14.4 |

Compressor

| | |
|---|---|
| Number: | Scroll |
| No. Compressor/Tons: | 2/4.3 |

System Data (7)

| | |
|---|---|
| No. Refrigerant Circuits: | 2 |
| Suction Line (in.) OD | 1 1/8" Horizontal & Vertical |
| Liquid Line (in.) OD | 1/2" |

## ELECTRICAL SCHEDULE

| CONNECTION # | CONNECTION DESCRIPTION | FROM | TO |
|---|---|---|---|
| E3-MUA | 5 WIRES CONDUCTOR CABLE - 24VAC | MUA UNIT | CONDENSER UNIT |
| E4-MUA | 3 WIRES CONDUCTOR CABLE - 5VDC | MUA UNIT | CONDENSER UNIT |
| E5-MUA | 208/3/60 - FAN MOTOR POWER - 3 WIRES | BUILDING SOURCE | CU-1 |
| | | | |
| | | | |

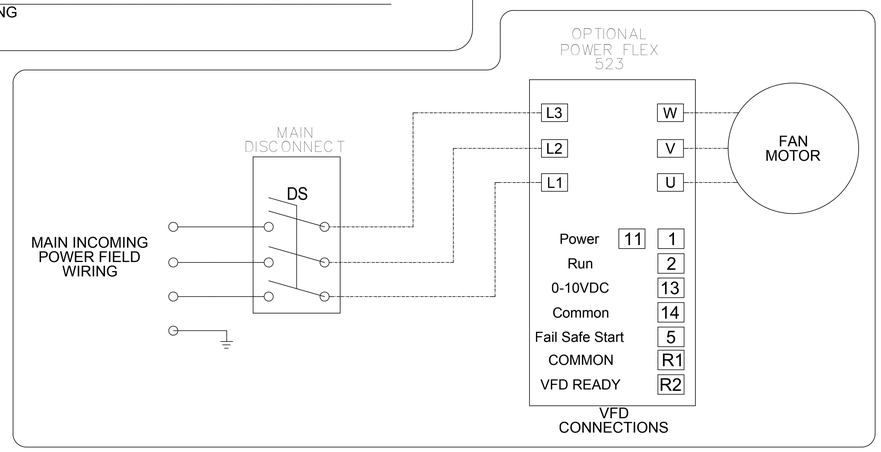


RELEASE FOR CONSTRUCTION
AS NOTED ON PLANS REVIEW
DEVELOPMENT SERVICES
LEE'S SUMMIT, MISSOURI
03/10/2021

Bergmeyer
www.bergmeyer.com
BOS - 51 Sleeper St. 6th Floor Boston, MA 02210 617.542.1025
LA - 800 South Figueroa St. Suite 1050 Los Angeles, CA 90017 212.337.1090

CONSULTANTS:
Schnackel engineers
800-581-0963
www.schnackel.com
SE JOB# 200363

SEAL/ SIGNATURE:
STATE OF MISSOURI
GREGORY ROY SCHNACKEL
NUMBER E-026570
Date: 03/05/21
COA #: E-2009006642

THIS DRAWING MUST BE CHECKED, SIGNED AND RETURNED TO THE APPROPRIATE FACTORY:
PLAN REVIEW MUST INCLUDE:
1. ALL DIMENSIONAL INFORMATION, MOUNTING POSITIONS AND CLEARANCES
2. THE ELEVATION AND TYPE OF COOKING EQUIPMENT.
NOTE: ELEVATION AND TYPE OF COOKING EQUIPMENT ANY CHANGES IN COOKING EQUIPMENT SUCH AS INCREASED ENERGY INPUTS OR EQUIPMENT POSITION MAY AFFECT EXHAUST AIRFLOW. HALTON MUST BE NOTIFIED IF ANY OF THESE CONDITIONS MAY OCCUR. OTHERWISE, HALTON DYNAMIC HOODS WILL NOT BE RESPONSIBLE.
☐ REVISE AND RESUBMIT
APPROVED FOR FABRICATION
☐ WITH CHANGES AS NOTED
☐ WITH NO CHANGES
APPROVED BY: DATE

MAIL APPROVED DRAWINGS TO APPROPRIATE FACTORY BELOW:
HALTON CO. (CANADA) ☐
1021 BREVIK PLACE
MISSISSAUGA, ON L4W 3R7
1-905-624-0301
HALTON CO. (USA) ☒
101 INDUSTRIAL DRIVE
SCOTTSVILLE, KY 42164
1-270-237-9600
WEBSITE: www.halton.com

| REV. | REVISION DESCRIPTION | BY | DATE |
|---|---|---|---|
| 1 | ELECTRICAL SCHEDULE | SKM | 03.03.21 |

| NO. | BY | DATE | DESCRIPTION |
|---|---|---|---|
| 1 | | 2021-03-09 | ADDENDUM #1 |
| | | 2021-01-11 | PERMIT/BID SET |
| | | 2020-12-21 | 75% SET |
| | | 2020-10-12 | DD SET |

PROJECT: SHAKE SHACK
LOCATION: HINGHAM, MA
DRAWN BY: NC
DATE: 12.14.20
SCALE: NOT TO SCALE
CONSULTANT:
Halton

DRAWING TITLE: MUA-DGX-2800
DRAWING No.: U20-925
REV. NO.: 1
SHEET NO.: 4 of 5

SHAKE SHACK

SHAKE SHACK - LEE'S SUMMIT MO

LEE'S SUMMIT
MISSOURI
SHACK #1348

PERMIT/BID SET

HALTON DRAWINGS

| | |
|---|---|
| DRAWN BY: | RAS |
| CHECKED BY: | GRS |
| JOB NO: | 20068.00 |

M704

RESERVED FOR DOCUMENT BINDING

# FAN INFORMATION TABLE

| FAN NO | MODEL | QTY | CFM | S.P. | H.P. | VOLTAGE | AMPS | ACCESSORIES |
|---|---|---|---|---|---|---|---|---|
| EF-1 | HSTXDRHUL1575SC | 1 | 1427 | 0.80" | 3/4 | 115/1/60 | 13.8 | MOUNT & WIRE DISCONNECT – SPEED CONTROL – 22-1/2" SQ GALV SF CURB 24" HIGH VENTED – LABEL UL/CUL 762, LISTED RESTAURANT – GREASE CONTAINER – HINGE KIT |
| EF-2 | HSTXDRHUL1575SC | 1 | 1626 | 0.85" | 3/4 | 115/1/60 | 13.8 | MOUNT & WIRE DISCONNECT – SPEED CONTROL – 22-1/2" SQ GALV SF CURB 24" HIGH VENTED – LABEL UL/CUL 762, LISTED RESTAURANT – GREASE CONTAINER – HINGE KIT |

NOTE:

ON ROOF UNITS, ANCHOR THE FAN SECURELY TO THE CURB. ANCHORING THROUGH THE VERTICAL PORTION OF THE CURB CAP FLANGE IS RECOMMENDED. USE A MINIMUM OF FOUR LAG BOLTS OR OTHER SUITABLE FASTENERS.

## HTXDRHUL

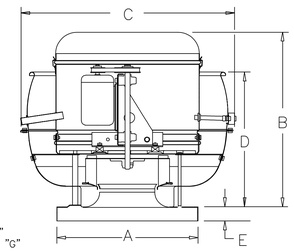


DAMPER OD = "F"
ROOF OPENING = "G"
CURB OD = "H"

| TAG | SIZE | A | B | C | D | E | F | G | H | J | K | SHIP'G WT.-LESS MOTOR |
|---|---|---|---|---|---|---|---|---|---|---|---|---|
| EF-1 | 15 | 24" | 27.63" | 36.5" | 22.63" | 2" | 18" | 19.5" | 22.50" | 19.50" | 23.75" | 140 |
| EF-2 | 15 | 24" | 27.63" | 36.5" | 22.63" | 2" | 18" | 19.5" | 22.50" | 19.50" | 23.75" | 140 |

NOTE:

ELECTRICAL CONNECTIONS TO BE MADE ON HINGE SIDE OF FAN.

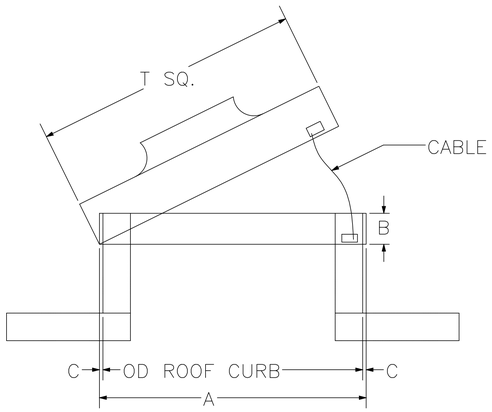


## CURB

CURB TYPE: GSFRC

OPTIONS: (as noted below)

1) 4 VENTS
2) NO DAMPER SHELF

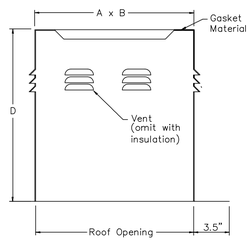


| TAG | QTY | DESCRIPTION | MATERIAL GUAGE | A | B | C | D | ROOF OPENING | OPTIONS |
|---|---|---|---|---|---|---|---|---|---|
| EF-1 | 1 | GSFRC 22.5 | 18 | 22.5" | 22.5" | 1.5" | 24" | 19.50" x 19.50" | 1,2 |
| EF-2 | 1 | GSFRC 22.5 | 18 | 22.5" | 22.5" | 1.5" | 24" | 19.50" x 19.50" | 1,2 |

THIS DRAWING MUST BE CHECKED, SIGNED AND RETURNED TO THE APPROPRIATE FACTORY. PLEASE VERIFY THE FOLLOWING:

1. ALL DIMENSIONAL INFORMATION, MOUNTING POSITIONS AND CLEARANCES.
2. THE LOCATION AND TYPE OF COOKING EQUIPMENT.

NOTE TO APPROVER
ANY CHANGES IN COOKING EQUIPMENT SUCH AS INCREASED ENERGY INPUTS OR EQUIPMENT ADDITIONS OR DELETIONS, SHALL NOTIFY HALTON COMPANY OF THESE CHANGES OCCUR. A RECALCULATION (SMOKE/ EXHAUST) AIRFLOW MAY BE REQUIRED.

☐ REVISE AND RESUBMIT

APPROVED FOR FABRICATION
☐ WITH NO CHANGES ☐ WITH CHANGES AS NOTED

APPROVED BY: DATE

MAIL APPROVED DRAWINGS TO APPROPRIATE FACTORY BELOW:

HALTON CO. (CANADA)
1021 BREVIK PLACE
MISSISSAUGA, ON L4W 3R7
1-905-624-0301

☐

HALTON CO. (USA)
101 INDUSTRIAL DRIVE
SCOTTSVILLE, KY 42164
1-270-237-5900

☒

WEBSITE: WWW.HALTON.COM

| REV. | REVISION DESCRIPTION | BY | DATE |
|---|---|---|---|
| 1 | NO CHANGE | SKM | 03.03.21 |
| 2 | | | |
| 3 | | | |
| 4 | | | |
| 5 | | | |
| 6 | | | |
| 7 | | | |

PROJECT: SHAKE SHACK
LOCATION: HINGHAM, MA
DRAWN BY: NC DATE: 12.14.20
SCALE: NOT TO SCALE
CONSULTANT:

Halton

DRAWING TITLE: FAN DETAILS
DRAWING No.: U20-925
REV. NO.: 1 SHEET NO.: 5 of 5

RELEASE FOR CONSTRUCTION
AS NOTED ON PLANS REVIEW
DEVELOPMENT SERVICES
LEE'S SUMMIT, MISSOURI
03/10/2021

Bergmeyer
www.bergmeyer.com

BOS - 51 Sleeper St. 6th Floor Boston, MA 02210 617.542.1025

LA - 800 South Figueroa St. Suite 1580 Los Angeles, CA 90017 212.337.1090

CONSULTANTS:

Schnackel engineers
800-581-0963
www.schnackel.com
SE JOB# 200363

SEAL/ SIGNATURE:

STATE OF MISSOURI
GREGORY ROY SCHNACKEL
NUMBER E-026570
Date: 03/05/21
COA #: E-2009006642

| NO. | BY | DATE | DESCRIPTION |
|---|---|---|---|
| 1 | | 2021-03-09 | ADDENDUM #1 |
| | | 2021-01-11 | PERMIT/BID SET |
| | | 2020-12-21 | 75% SET |
| | | 2020-10-12 | DD SET |

SHAKE SHACK

SHAKE SHACK - LEE'S SUMMIT MO

LEE'S SUMMIT
MISSOURI
SHACK #1348

PERMIT/BID SET

HALTON DRAWINGS

| | |
|---|---|
| DRAWN BY: | RAS |
| CHECKED BY: | GRS |
| JOB NO: | 20068.00 |

M705

RELEASE FOR CONSTRUCTION
AS NOTED ON PLANS REVIEW
DEVELOPMENT SERVICES
LEE'S SUMMIT, MISSOURI
03/10/2021


| SHEET NUPBER | SHEET NAME |
|---|---|
| P001 | PLUMBING ABBREVIATIONS AND SYMBOLS |
| P101 | PLUMBING WASTE & VENT PLAN |
| P120 | PLUMBING WATER & GAS PLAN |
| P150 | PLUMBING ROOF PLAN |
| P501 | PLUMBING DETAILS |
| P502 | PLUMBING DETAILS |
| P590 | PLUMBING SPECIFICATIONS |
| P591 | PLUMBING SPECIFICATIONS |
| P592 | PLUMBING SPECIFICATIONS |
| P601 | PLUMBING SCHEDULE |
| P901 | PLUMBING RISER DIAGRAMS |


| DESCRIPTION | FURNISHED | | | INSTALLED | | | REMARKS |
|---|---|---|---|---|---|---|---|
| | GENERAL CONTRACTOR | OWNER | LANDLORD | GENERAL CONTRACTOR | OWNER | LANDLORD | |
| DIVISION 22: PLUMBING | | | | | | | |
| 22.1 PLUMBING IDENTIFICATION | | | | | | | |
| 22.1.1 PIPING SYSTEM IDENTIFICATION | X | | | X | | | MATERIAL TO CONSIST OF 2" VINYL LETTERING |
| 22.1.2 UTILITY SHUT OFF IDENTIFICATION IN KITCHEN | X | | | X | | | MATERIAL TO CONSIST OF 2" VINYL RED LETTERING |
| 22.1.3 VALVE TAGS AND CHART | X | | | X | | | |
| 22.2 DRAINS AND CLEANOUTS | | | | | | | |
| 22.2.1 DRAINS AND FLOOR SINKS | X | | | X | | | |
| 22.2.2 THROUGH DRAIN FOR ICE MACHINE | X | | | X | | | REFER TO KITCHEN AND PLUMBING SHEET FOR SPECIFICATION |
| 22.3 PIPING SYSTEMS AND SPECIALITIES | | | | | | | |
| 22.3.1 STORM DRAINAGE | X | | | X | | | |
| 22.3.2 SANITARY WASTE | X | | | X | | | |
| 22.3.3 DOMESTIC WATER | X | | | X | | | |
| 22.3.4 GREASE WASTE | X | | | X | | | |
| 22.3.5 CONDENSATE | X | | | X | | | |
| 22.3.6 VENT | X | | | X | | | |
| 22.3.7 NATURAL GAS | X | | | X | | | |
| 22.3.8 PIPING FITTINGS | X | | | X | | | |
| 22.3.9 VALVES AND SHUT OFF VALVES | X | | | X | | | |
| 22.3.10 WATER BOOSTER PUMP | X | | | X | | | |
| 22.3.11 GAS BOOSTER PUMP | X | | | X | | | |
| 22.3.12 GREASE INTERCEPTOR | X | | | X | | | |
| 22.4 INCOMING WATER FILTER SYSTEM | | X | | X | | | GENERAL CONTRACTOR SCOPE OF WORK TO INCLUDE FINAL UTILITY CONNECTIONS |
| 22.5 WATER HEATER | X | | | X | | | |
| 22.6 MOP SINK | | | | | | | |
| 22.6.1 FLOOR MOUNTED MOP SINK | X | | | X | | | REFER TO KITCHEN AND PLUMBING SHEET FOR SPECIFICATION |
| 22.6.2 SERVICE FAUCET FOR MOP SINK | | X | | X | | | SUPPLIED BY VENDOR NO. 27 |
| 22.7 PLUMBING FIXTURES | | | | | | | SUPPLIED BY VENDOR NO. 21 |
| 22.7.1 TOILETS, URINAL, AND LAVORATORIES | X | | | X | | | GENERAL CONTRACTOR SCOPE OF WORK TO INCLUDE ALL NECESSARY FITTINGS (E.G. FLUSH VALVES, FAUCETS, AND FITTINGS) |
| 22.7.2 KITCHEN FAUCETS | | X | | | X | | GENERAL CONTRACTOR SCOPE OF WORK TO INCLUDE FINAL UTILITY CONNECTIONS |

## PLUMBING SYMBOL LEGEND

| SYMBOL | DESCRIPTION | SYMBOL | DESCRIPTION |
|---|---|---|---|
| | SANITARY DRAIN ABOVEGROUND | | CLEAN OUT |
| | SANITARY DRAIN BELOWGROUND | | GRADE CLEAN OUT |
| CW | GREASE WASTE ABOVEGROUND | WCO | WALL CLEAN OUT |
| CW | GREASE WASTE BELOWGROUND | N.I.C. | NOT IN CONTRACT |
| AW | ACID WASTE ABOVEGROUND | VTR | VENT THROUGH ROOF |
| AW | ACID WASTE BELOWGROUND | | BALL VALVE |
| | VENT LINE | | CHECK VALVE |
| AV | ACID VENT | | PRESSURE REGULATING VALVE (PRV) |
| WAGD | WASTE ANESTHESIA GAS DISPOSAL | | |
| S | STORM DRAIN ABOVEGROUND | | GAS COCK |
| S | STORM DRAIN BELOWGROUND | | PRESSURE REGULATING VALVE (PRV) AND GAS COCK |
| OS | OVERFLOW STORM DRAIN | | |
| | COLD WATER (CW) | | MIXING VALVE |
| | HOT WATER (HW) | | SOLENOID VALVE |
| | HOT WATER CIRCULATING (HWC) | | VALVE IN RISE |
| 140° | HOT WATER 140° | | AUTOMATIC BALANCING VALVE |
| 140° | HOT WATER CIRCULATING 140° | | RUNNING TRAP |
| T | TEMPERED WATER | HB | HOSE BIBB |
| T | TEMPERED WATER CIRCULATING | WH | WALL HYDRANT |
| CS | COLD SOFT WATER | FH | FIRE HYDRANT |
| HS | HOT SOFT WATER | V.C.P. | VITRIFIED CLAY PIPE |
| HS | HOT SOFT WATER CIRCULATING | C.I. | CAST IRON |
| F | FIRE LINE | I.E. | INVERT ELEVATION |
| G | GAS LINE | B.F.F. | BELOW FINISHED FLOOR |
| A | COMPRESSED AIR LINE | | PLUMBING RISER NUMBER |
| V | VACUUM LINE | | |
| OX | OXYGEN LINE | | DOWNSPOUT NOZZLE |
| D | CONDENSATE DRAIN | RD | ROOF DRAIN/OVERFLOW ROOF DRAIN |

## CX SUBMITTAL MATRIX

GENERAL CONTRACTORS TO ALSO REVIEW ARCHITECTRUAL SPECIFICATIONS AS NOTED IN PLANS IN PLAN SECTION 700 OF THE ARCHITECTURAL PACKAGE FOR REQUIRED SUBMITTALS THAT MIGHT NOT BE LISTED BELOW.

| SUBMITTAL DECRIPTION | Required Review Time (Business Days) | Architect of Record | Shake Shack | Commissioning Agent | Physical Sample Required | Submittal for Review | Submittal for Record Only |
|---|---|---|---|---|---|---|---|
| Anchor Bolts Shops | 5 | X | | | | X | |
| ATAS-Detailed Shop DWGS(Submitted by Owner Vendor to Owner/AOR prior to const.) | 5 | X | | | | | X |
| Concrete Mix Design | 5 | X | | | | X | |
| Construction Prefunctional Checklists | 5 | X | | X | | | X |
| Decorative Metal Shop Drawings | 5 | X | | | | | |
| Diffusers, Grills & Registers | 5 | X | | | | X | |
| Doors, Frames & Hardware | 7 | X | | | | X | |
| Ductwork Layout (if there are signifcant changes in field) | 5 | X | | X | | X | |
| Electrical Distribution Equipment | 5 | X | | X | | | |
| Elevator & Vertical Transportation Shop Drawings | 5 | X | | | | | X |
| Epoxy Floor | 5 | X | | | | | X |
| Fire Alarm Shop Drawings & Device Cut Sheets | 5 | x | | X | | X | |
| Fire Sprinkler Shop Drawings, Hydraulic Calculations & Device Cut Sheets | 5 | x | | X | | | X |
| HVAC Equipment(if Carrier – Submitted by Owner Vendor to Owner/AOR prior to const.) | 5 | x | | X | | X | |
| Light Fixtures(Submitted by Owner Vendor to Owner/AOR prior to construction) | 5 | X | | X | | X | |
| MEP Tests, Start-Up, and Programming Reports | 5 | X | | X | | X | |
| Millwork – Material Submittals (if differs from spec) | 5 | X | X | | X | | |
| Millwork – Shop Drawings (custom items & design features only) | 5 | X | | | | | |
| Restroom Partitions | 5 | X | | | | X | |
| Plumbing Fixtures | 5 | X | | X | | X | |
| Railing Shop Drawings | 5 | X | | | | | X |
| Rebar | 5 | X | | | | X | |
| Stair Shop Drawings | 5 | X | | | | | X |
| Structural Steel Shop Drawings | 7 | X | | | | X | |
| Storefront – product data Submittal (if different from specified) | 5 | X | | | | | |
| Storefront – Shop Drawings | 5 | X | | | | | |
| Tile (if differs from spec) | 5 | X | | | | X | |
| Window Film | 5 | X | | | | | |

## CX MATRIX

| Division | System / Equipment | Flush & Clean / Sanitize | Pneumatic Pressure Test | Hydrostatic Pressure Test | Duck Leak Test | Insulation Resistance (Megger) Test | Current Testing | Startup | Contractor Prefunctional Checklists | Functional Performance Test (Validation) |
|---|---|---|---|---|---|---|---|---|---|---|
| 22 | Domestic Cold and Hot Water Piping | X | | X | | | | | X | |
| 22 | Backflow Preventers | | | | | | | | X | |
| 22 | Mixing Valves | | | | | | | | X | |
| 22 | Water Heaters and Expansion Tanks | | | | | | | X | X | X |
| 22 | Domestic Hot Water Recirculating Pump | | | | | | | X | X | X |
| 22 | Sanitary Waste / Vent Piping | X | | X | | | | | X | |
| 22 | Storm Water Piping | X | | X | | | | | X | |

## CxA SCOPE OF WORK

Division 22 - Plumbing Commissioning Requirements

Scope of Work

- Verify plumbing systems, subsystems, equipment, instrumentation, and control systems have been completed and calibrated according to the Contract Documents and approved submittals.
- Validate the system is operable by setting the plumbing system into operating mode to be tested according to approved test procedures (for example; normal shutdown, normal auto position, normal manual position, alarm conditions, etc.).

Prefunctional Construction Checklists

- Domestic cold and hot water piping and fittings.
- Filtered cold water piping and fittings.
- Sanitary waste and vent piping and fittings.
- Storm water piping and fittings.
- Pumps, motors, accessories, and controls.
- Hot water generators and controls.
- Backflow preventers.
- Meters and gages.
- Condensate return.
- Valves.
- Drains
- Plumbing fixtures.

Bergmeyer
www.bergmeyer.com
LA - 800 South Figueroa St. Suite 1100, Los Angeles, CA 90017 212.337.1090
BOS - 51 Sleeper St. 6th Floor, Boston, MA 02210 617.542.1025

CONSULTANTS:
Schnackel engineers
800-581-0963
www.schnackel.com
SE JOB# 200363

SEAL/ SIGNATURE:
STATE OF MISSOURI
GREGORY ROY SCHNACKEL
NUMBER E-026570
Date: 03/05/21
COA #: E-2009006642

| NO. | BY | DATE | DESCRIPTION |
|---|---|---|---|
| 1 | | 2021-03-09 | ADDENDUM #1 |
| | | 2021-01-11 | PERMIT/BID SET |
| | | 2020-12-21 | 75% SET |
| | | 2020-10-12 | DD SET |

SHAKE SHACK

SHAKE SHACK - LEE'S SUMMIT MO

LEE'S SUMMIT
MISSOURI
SHACK #1348

PERMIT/BID SET

PLUMBING ABBREVIATIONS & SYMBOLS

DRAWN BY: MJS
CHECKED BY: GRS
JOB NO: 20068.00

P001

RELEASE FOR CONSTRUCTION
AS NOTED ON PLANS REVIEW
DEVELOPMENT SERVICES
LEE'S SUMMIT, MISSOURI
03/10/2021

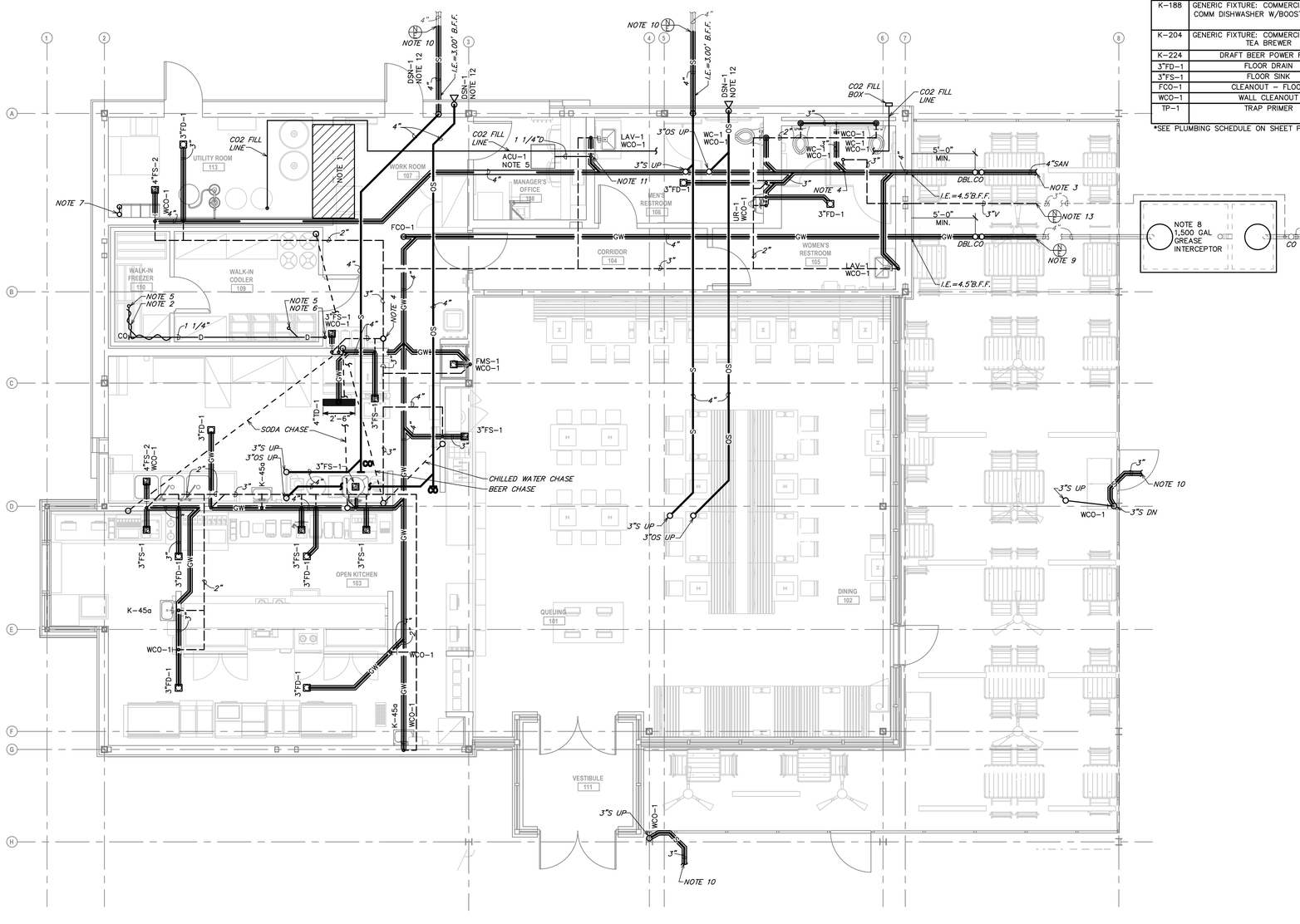


1 PLUMBING WASTE & VENT PLAN
SCALE: 1/4" = 1'-0"

CONTRACTOR SHALL COORDINATE ALL KITCHEN EQUIPMENT UTILITY CONNECTIONS WITH MANUFACTURER INSTALLATION INSTRUCTIONS, OWNER, AND ARCHITECT PRIOR TO INSTALLATION.

## PLUMBING FIXTURE SCHEDULE

| Mark | |
|---|---|
| WC-1 | WATER CLOSETS |
| LAV-1 | LAVATORIES |
| UR-1 | URINAL |
| WH-1 | WALL HYDRANT |
| RH-1 | ROOF HYDRANT |
| K-36 | GENERIC FIXTURE: COMMERCIAL KITCHEN, COMMERCIAL ICE MACHINE |
| K-40 | FLOOR MOP SINK |
| K-45A | GENERIC FIXTURE: COMMERCIAL KITCHEN, KITCHEN HAND SINK |
| K-46A | GENERIC FIXTURE: COMMERCIAL KITCHEN, KITCHEN HAND SINK |
| K-60A | GENERIC FIXTURE: COMMERCIAL KITCHEN, 3-COMP SINK |
| K-60B | GENERIC FIXTURE: COMMERCIAL KITCHEN, 3-COMP SINK |
| K-63 | GENERIC FIXTURE: COMMERCIAL KITCHEN, COMM DISHWASHER W/CHEMICAL SANITATION |
| K-70A | GENERIC FIXTURE: COMMERCIAL KITCHEN, PREP SINK |
| K-160 | CUSTARD MACHINE |
| K-171 | GENERIC FIXTURE: COMMERCIAL KITCHEN, DIPPER WELL |
| K-177 | GENERIC FIXTURE: COMMERCIAL KITCHEN, PREP SINK |
| K-177A | FILTERED WATER FILL |
| K-188 | GENERIC FIXTURE: COMMERCIAL KITCHEN, COMM DISHWASHER W/BOOSTER HEATER |
| K-204 | GENERIC FIXTURE: COMMERCIAL KITCHEN, TEA BREWER |
| K-224 | DRAFT BEER POWER RACK |
| 3"FD-1 | FLOOR DRAIN |
| 3"FS-1 | FLOOR SINK |
| FCO-1 | CLEANOUT - FLOOR |
| WCO-1 | WALL CLEANOUT |
| TP-1 | TRAP PRIMER |

*SEE PLUMBING SCHEDULE ON SHEET P601

### GENERAL NOTES:

A. THE EXISTING CONDITIONS ARE BASED ON "AS-BUILT" DRAWINGS AND/OR LIMITED FIELD VERIFICATIONS. THE CONTRACTOR SHALL ADJUST TO ACTUAL FIELD CONDITIONS AT NO ADDITIONAL EXPENSE TO THE PROJECT. NO ADDITIONAL COMPENSATION WILL BE PROVIDED FOR ANY EXTRAS DUE TO THE CONTRACTOR'S FAILURE TO VISIT THE PROJECT SITE AND/OR PREDETERMINATION OF EXISTING CONDITIONS PRIOR TO SUBMITTING THE BID. ANY DISCREPANCIES SHALL BE IMMEDIATELY REPORTED TO THE ARCHITECT/ENGINEER FOR RESOLUTION.
B. THE CONTRACTOR SHALL FAMILIARIZE HIMSELF WITH THE INCIDENTAL DEMOLITION WORK PRIOR TO BIDDING AND COMMENCEMENT OF WORK. THE CONTRACTOR IS RESPONSIBLE FOR DEMOLITION OF ALL EXISTING EQUIPMENT AS REQUIRED FOR THE INSTALLATION/CONSTRUCTION OF NEW WORK.
C. ALL WORK SHALL BE COMPLETED IN ACCORDANCE WITH ALL APPLICABLE GOVERNMENTAL AND LOCAL CODE REQUIREMENTS.
D. PROVIDE ACCESS PANELS AS REQUIRED TO ALLOW ACCESS TO VALVES, EQUIPMENT, ETC. LOCATED ABOVE INACCESSIBLE CEILINGS AND WALL CAVITIES.
E. ALL SANITARY LINES AND PLUMBING FIXTURES ON THE PROJECT SHALL HAVE AN APPROVED MEANS OF SEWAGE BACKFLOW PREVENTION. FIXTURE SPECIFIC BACKFLOW PREVENTION INCLUDING AIR GAPS AND VACUUM BREAKERS ARE AN ACCEPTABLE MEANS OF BACKFLOW PREVENTION.
F. PIPE SIZES INDICATED ON THE PLANS ARE MINIMUM. THE CONTRACTOR SHALL PROVIDE PIPE SIZES EQUAL TO OR GREATER THAN THE SPECIFIED SIZES. THE CONTRACTOR MAY INCREASE PIPE SIZES AS REQUIRED AT NO ADDITIONAL EXPENSE TO THE PROJECT.
G. REFER TO THE PLUMBING FIXTURE SCHEDULE FOR INDIVIDUAL PLUMBING FIXTURE CONNECTION SIZE REQUIREMENTS.
H. COORDINATE ALL SLAB PENETRATIONS WITH GENERAL CONTRACTOR PRIOR TO CONSTRUCTION. MAINTAIN A MINIMUM OF 2" CLEARANCE FROM THE EDGE OF THE SLAB OPENING TO ANY STRUCTURAL MEMBERS AND PIPES.
I. SLEEVE OR CORE-DRILL FLOOR SLABS, WALLS, ETC. AS REQUIRED FOR PIPING AND FIRE-STOP OPENING AROUND PIPE. VERIFY LOCATION OF STRUCTURAL BEAMS, JOISTS, ETC. BEFORE DRILLING.
J. THE CONTRACTOR SHALL OBTAIN A COPY OF THE LANDLORD'S TENANT CRITERIA MANUAL PRIOR TO BIDDING. THE TENANT CRITERIA MANUAL REQUIREMENTS SHALL BE INCLUDED IN THE CONTRACTOR CONTRACT. THE CONTRACTOR SHALL BE RESPONSIBLE FOR COMPLYING WITH THE LANDLORD REQUIREMENTS AT NO ADDITIONAL EXPENSE TO THE PROJECT.
K. PROVIDE TEMPORARY COVERS, CAPS, OR PLUGS ON SANITARY SEWER SYSTEM THROUGHOUT THE DURATION OF CONSTRUCTION. RAG WADS, DUCT TAPE, OR OTHER SIMILAR METHODS OF TEMPORARY COVERS SHALL NOT BE UTILIZED. UPON COMPLETION OF CONSTRUCTION, COMPLETELY REMOVE ANY AND ALL OBSTRUCTIONS INSIDE THE ENTIRE SYSTEM BY SNAKING, RODING, OR JETTING THE SYSTEM IMMEDIATELY PRIOR TO PROJECT TURNOVER TO THE OWNER.
L. ALL BELOW GRADE SANITARY LINES SHALL BE A MINIMUM OF 2" OR IN ACCORDANCE WITH LOCAL CODE REQUIREMENTS.
M. SANITARY TEE FITTINGS SHALL NOT BE INSTALLED IN DRAIN, WASTE, AND VENT (DWV) SYSTEMS.
N. INSTALL SANITARY PIPING 2 1/2" OR SMALLER AT A SLOPE OF 1/4" PER FOOT AND SANITARY PIPING 3" AND LARGER AT A SLOPE OF 1/8" PER FOOT.
O. INSTALL GREASE WASTE PIPING AT A SLOPE OF 1/4" PER FOOT.
P. THE PLUMBING CONTRACTOR SHALL PROVIDE HEAT TRACING TAPE AND INSULATION AS REQUIRED FOR ALL PIPING INSTALLED WITHIN WALK-IN FREEZERS TO PREVENT PIPING FROM FREEZING. COORDINATE THE INSTALLATION OF THE HEAT TRACING WITH THE ELECTRICAL CONTRACTOR PRIOR TO INSTALLATION.
Q. PROVIDE INDIRECT DRAINAGE ON ALL KITCHEN EQUIPMENT PER LOCAL JURISDICTION REQUIREMENTS. REFER TO FOOD SERVICE PLANS FOR ADDITIONAL DRAINAGE REQUIREMENTS.

### PLUMBING NOTES:

1. THIS SPACE IS RESERVED FOR ELECTRICAL EQUIPMENT. NO PIPING SHALL PASS BELOW, ABOVE, OR AROUND ELECTRICAL EQUIPMENT. PROVIDE CODE REQUIRED MINIMUM CLEARANCE ABOVE ELECTRICAL EQUIPMENT ACCESS SPACE.
2. FURNISH AND INSTALL HEAT TRACE BEFORE PIPE INSULATION IS INSTALLED. HEAT TRACE SHALL BE CHROMALOX SRL AND SHALL BE INSTALLED WHERE SHOWN ON THE PLANS. COORDINATE INSTALLATION WITH ELECTRICAL CONTRACTOR.
3. CONNECT THE NEW SANITARY SEWER TO THE EXISTING SANITARY SEWER OF EQUAL OR GREATER SIZE. FIELD VERIFY THE EXACT LOCATION, SIZE, AND INVERT ELEVATION OF THE EXISTING SANITARY SEWER PRIOR TO CONSTRUCTION. ADJUST THE NEW SANITARY SEWER AS REQUIRED TO ALLOW FOR CONNECTION TO THE EXISTING SANITARY SEWER SYSTEM. MAINTAIN CODE MINIMUM PIPE SLOPES.
4. UP TO 4"VTR
5. PIPE GRAVITY PRIMARY CONDENSATE FROM EQUIPMENT TO CODE COMPLIANT DISPOSAL POINT. THE CONDENSATE SHALL BE CONNECTED TO THE EQUIPMENT IN ACCORDANCE WITH THE MANUFACTURER'S RECOMMENDATIONS. DISCHARGE SHALL BE THROUGH A CODE APPROVED AIR GAP. THE PIPE ROUTING INDICATED ON THE PLANS IS FOR REFERENCE ONLY. INSTALL THE PIPING AS HIGH AS POSSIBLE AND COORDINATE ROUTING WITH STRUCTURAL, MECHANICAL, ELECTRICAL, ETC. CONDENSATE SHALL NOT BE RUN OVER ELECTRICAL EQUIPMENT.
6. ROUTE CONDENSATE DRAIN TO DISCHARGE INTO SANITARY WASTE MAINTAINING A CODE APPROVED AIR GAP.
7. FURNISH AND INSTALL 4" DIAMETER PVC COMBUSTION AIR AND EXHAUST FROM THE WATER HEATER TO THE EXTERIOR. FURNISH AND INSTALL CONCENTRIC VENT KIT. THE INSTALLATION SHALL BE IN ACCORDANCE WITH THE MANUFACTURER'S RECOMMENDATIONS AND ALL APPLICABLE LOCAL AND STATE CODES. COORDINATE THE MAXIMUM ALLOWABLE EXHAUST AND VENT LENGTHS WITH THE MANUFACTURER'S REQUIREMENTS. INSTALL CONCENTRIC VENT THROUGH ROOF A MINIMUM DISTANCE OF 15'-0" FROM ALL FRESH AIR INLETS AND BUILDING OPENINGS.
8. GREASE INTERCEPTOR. LANDLORD TO PROVIDE 1,500 GALLON GREASE INTERCEPTOR, JENSEN JP1500. PROVIDE SAMPLING BOX PER JURISDICTION REQUIREMENTS. INSTALL PER MANUFACTURER'S REQUIREMENTS. PROVIDE EXTENTIONS AS NEEDED TO MEET REQUIRED GRADE ELEVATION. PROVIDE H-20 HEAVY TRAFFIC RATED COVERS. PROVIDE VENT BELOW GRADE BACK TO BUILDING WITH WALL CLEANOUT AND ROUTE UP THROUGH ROOF.
9. CONNECT THE NEW GREASE WASTE TO THE EXISTING GREASE WASTE LINE OF EQUAL OR GREATER SIZE. FIELD VERIFY THE EXACT LOCATION, SIZE, AND INVERT ELEVATION OF THE EXISTING GREASE WASTE LINE PRIOR TO CONSTRUCTION. ADJUST THE NEW GREASE WASTE AS REQUIRED TO ALLOW FOR CONNECTION TO THE EXISTING GREASE WASTE SYSTEM. MAINTAIN CODE MINIMUM PIPE SLOPES.
10. CONNECT THE NEW STORM SEWER TO THE EXISTING STORM SEWER OF EQUAL OR GREATER SIZE. FIELD VERIFY THE EXACT LOCATION, SIZE, AND INVERT ELEVATION OF THE EXISTING STORM SEWER PRIOR TO CONSTRUCTION. ADJUST THE NEW STORM SEWER AS REQUIRED TO ALLOW FOR CONNECTION TO THE EXISTING STORM SEWER SYSTEM. MAINTAIN CODE MINIMUM PIPE SLOPES.
11. DISCHARGE CONDENSATE INTO LAVATORY TAIL PIECE.
12. MOUNT THE DOWNSPOUT NOZZLE AT A MINIMUM OF 1'-6" ABOVE FINISHED GRADE.
13. CONNECT THE NEW VENT TO THE EXISTING VENT SYSTEM TERMINATING THROUGH THE ROOF. FIELD VERIFY THE EXACT SIZE AND LOCATION OF THE EXISTING VENT THROUGH ROOF PRIOR TO SUBMITTING BID AND COMMENCING CONSTRUCTION.

Bergmeyer
BOS - 51 Sleeper St. 6th Floor Boston, MA 02210 617.542.1025
LA - 800 South Figueroa St. Suite 1000 Los Angeles, CA 90017 212.337.1090
www.bergmeyer.com

CONSULTANTS:
Schnackel engineers
800-581-0963
www.schnackel.com
SE JOB# 200363

SEAL/ SIGNATURE:
STATE OF MISSOURI
GREGORY ROY SCHNACKEL
NUMBER E-28570
Date: 03/05/21
COA #: E-2009006642

| NO. | BY | DATE | DESCRIPTION |
|---|---|---|---|
| 1 | | 2021-03-09 | ADDENDUM #1 |
| | | 2021-01-11 | PERMIT/BID SET |
| | | 2020-12-21 | 75% SET |
| | | 2020-10-12 | DD SET |

SHAKE SHACK

SHAKE SHACK - LEE'S SUMMIT MO

LEE'S SUMMIT
MISSOURI
SHACK #1348

PERMIT/BID SET

PLUMBING WASTE & VENT PLAN

DRAWN BY: MJS
CHECKED BY: GRS
JOB NO: 20068.00

P101

RELEASE FOR CONSTRUCTION
AS NOTED ON PLANS REVIEW
DEVELOPMENT SERVICES
LEE'S SUMMIT, MISSOURI
03/10/2021

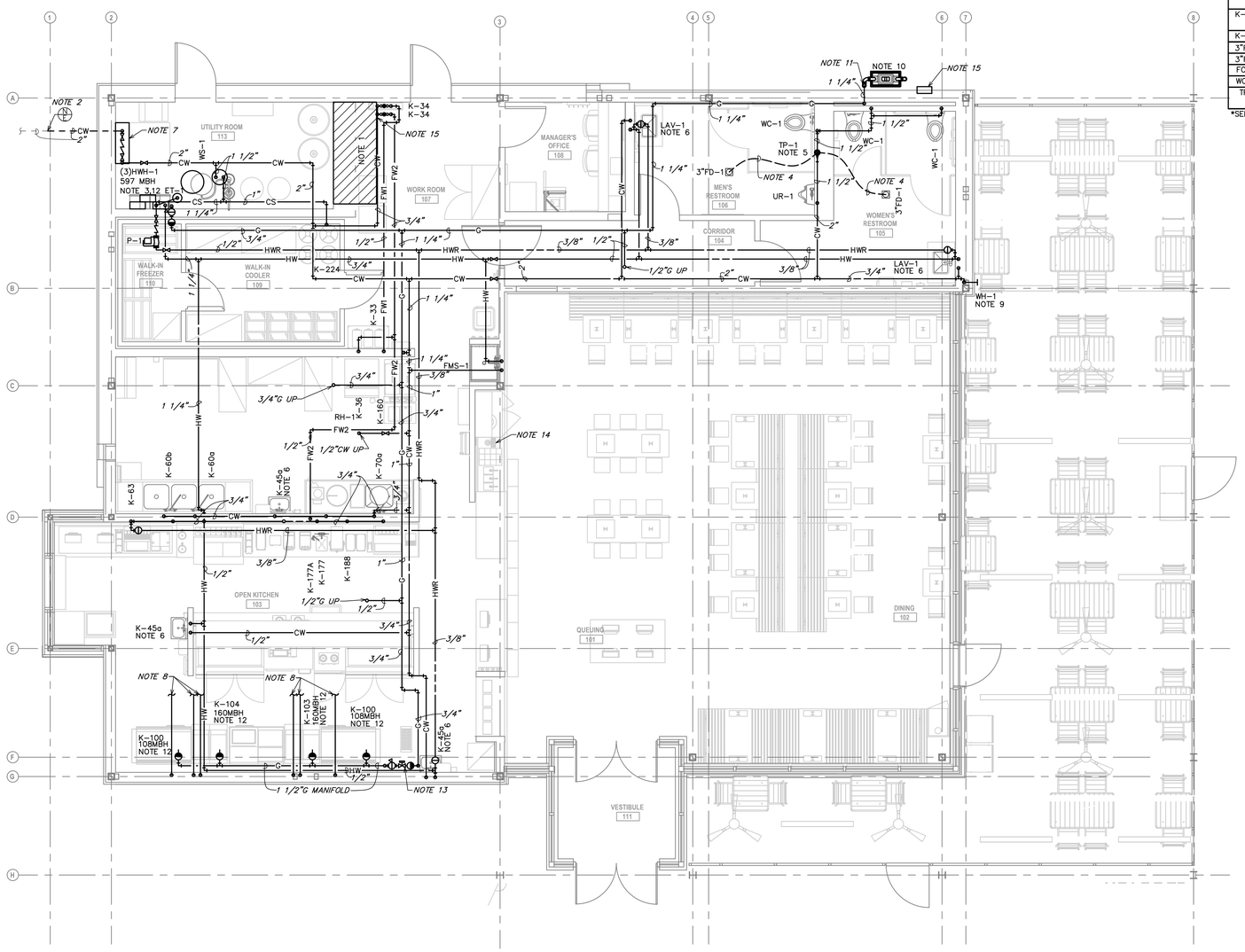


1 PLUMBING WATER & GAS PLAN
SCALE: 1/4" = 1'-0"

| PLUMBING FIXTURE SCHEDULE | |
|---|---|
| Mark | |
| WC-1 | WATER CLOSETS |
| LAV-1 | LAVATORIES |
| UR-1 | URINAL |
| WH-1 | WALL HYDRANT |
| RH-1 | ROOF HYDRANT |
| K-36 | GENERIC FIXTURE: COMMERCIAL KITCHEN, COMMERCIAL ICE MACHINE |
| K-40 | FLOOR MOP SINK |
| K-45A | GENERIC FIXTURE: COMMERCIAL KITCHEN, KITCHEN HAND SINK |
| K-46A | GENERIC FIXTURE: COMMERCIAL KITCHEN, KITCHEN HAND SINK |
| K-60A | GENERIC FIXTURE: COMMERCIAL KITCHEN, 3-COMP SINK |
| K-60B | GENERIC FIXTURE: COMMERCIAL KITCHEN, 3-COMP SINK |
| K-63 | GENERIC FIXTURE: COMMERCIAL KITCHEN, COMM DISHWASHER W/CHEMICAL SANITATION |
| K-70A | GENERIC FIXTURE: COMMERCIAL KITCHEN, PREP SINK |
| K-160 | CUSTARD MACHINE |
| K-171 | GENERIC FIXTURE: COMMERCIAL KITCHEN, DIPPER WELL |
| K-177 | GENERIC FIXTURE: COMMERCIAL KITCHEN, PREP SINK |
| K-177A | FILTERED WATER FILL |
| K-188 | GENERIC FIXTURE: COMMERCIAL KITCHEN, COMM DISHWASHER W/BOOSTER HEATER |
| K-204 | GENERIC FIXTURE: COMMERCIAL KITCHEN, TEA BREWER |
| K-224 | DRAFT BEER POWER RACK |
| 3"FD-1 | FLOOR DRAIN |
| 3"FS-1 | FLOOR SINK |
| FCO-1 | CLEANOUT - FLOOR |
| WCO-1 | WALL CLEANOUT |
| TP-1 | TRAP PRIMER |

*SEE PLUMBING SCHEDULE ON SHEET P601

*GENERAL NOTES:*

A. THE EXISTING CONDITIONS ARE BASED ON "AS-BUILT" DRAWINGS AND/OR LIMITED FIELD VERIFICATIONS. THE CONTRACTOR SHALL ADJUST TO ACTUAL FIELD CONDITIONS AT NO ADDITIONAL EXPENSE TO THE PROJECT. NO ADDITIONAL COMPENSATION WILL BE PROVIDED FOR ANY EXTRAS DUE TO THE CONTRACTOR'S FAILURE TO VISIT THE PROJECT SITE AND/OR PREDETERMINATION OF EXISTING CONDITIONS PRIOR TO SUBMITTING THE BID. ANY DISCREPANCIES SHALL BE IMMEDIATELY REPORTED TO THE ARCHITECT/ENGINEER FOR RESOLUTION.
B. THE CONTRACTOR SHALL FAMILIARIZE HIMSELF WITH THE INCIDENTAL DEMOLITION WORK PRIOR TO BIDDING AND COMMENCEMENT OF WORK. THE CONTRACTOR IS RESPONSIBLE FOR DEMOLITION OF ALL EXISTING EQUIPMENT AS REQUIRED FOR THE INSTALLATION/CONSTRUCTION OF NEW WORK.
C. ALL WORK SHALL BE COMPLETED IN ACCORDANCE WITH ALL APPLICABLE GOVERNMENTAL AND LOCAL CODE REQUIREMENTS.
D. PROVIDE ACCESS PANELS AS REQUIRED TO ALLOW ACCESS TO VALVES, EQUIPMENT, ETC. LOCATED ABOVE INACCESSIBLE CEILINGS AND WALL CAVITIES.
E. ALL SANITARY LINES AND PLUMBING FIXTURES ON THE PROJECT SHALL HAVE AN APPROVED MEANS OF SEWAGE BACKFLOW PREVENTION. FIXTURE SPECIFIC BACKFLOW PREVENTION INCLUDING AIR GAPS AND VACUUM BREAKERS ARE AN ACCEPTABLE MEANS OF BACKFLOW PREVENTION.
F. PIPE SIZES INDICATED ON THE PLANS ARE MINIMUM. THE CONTRACTOR SHALL PROVIDE PIPE SIZES EQUAL TO OR GREATER THAN THE SPECIFIED SIZES. THE CONTRACTOR MAY INCREASE PIPE SIZES AS REQUIRED AT NO ADDITIONAL EXPENSE TO THE PROJECT.
G. REFER TO THE PLUMBING FIXTURE SCHEDULE FOR INDIVIDUAL PLUMBING FIXTURE CONNECTION SIZE REQUIREMENTS.
H. COORDINATE ALL SLAB PENETRATIONS WITH GENERAL CONTRACTOR PRIOR TO CONSTRUCTION. MAINTAIN A MINIMUM OF 2" CLEARANCE FROM THE EDGE OF THE SLAB OPENING TO ANY STRUCTURAL MEMBERS AND PIPES.
I. SLEEVE OR CORE-DRILL FLOOR SLABS, WALLS, ETC. AS REQUIRED FOR PIPING AND FIRE-STOP OPENING AROUND PIPE. VERIFY LOCATION OF STRUCTURAL BEAMS, JOISTS, ETC. BEFORE DRILLING.
J. THE CONTRACTOR SHALL OBTAIN A COPY OF THE LANDLORD'S TENANT CRITERIA MANUAL PRIOR TO BIDDING. THE TENANT CRITERIA MANUAL REQUIREMENTS SHALL BE INCLUDED IN THE CONTRACTOR CONTRACT. THE CONTRACTOR SHALL BE RESPONSIBLE FOR COMPLYING WITH THE LANDLORD REQUIREMENTS AT NO ADDITIONAL EXPENSE TO THE PROJECT.
K. ALL HANDICAPPED ACCESSIBLE WATER CLOSETS SHALL HAVE THE FLUSHING HANDLE ON THE WIDE SIDE OF THE HANDICAPPED ACCESSIBLE STALL AS REQUIRED BY ADA REQUIREMENTS.
L. ALL PUBLIC USE LAVATORY FAUCETS SHALL HAVE AN AUTOMATIC SAFETY WATER MIXING DEVICE IN ACCORDANCE WITH ANSI/ASSE 1017 OR 1070 AS APPLICABLE.

*PLUMBING NOTES:*

1. THIS SPACE IS RESERVED FOR ELECTRICAL EQUIPMENT. NO PIPING SHALL PASS BELOW, ABOVE, OR AROUND ELECTRICAL EQUIPMENT. PROVIDE CODE REQUIRED MINIMUM CLEARANCE ABOVE ELECTRICAL EQUIPMENT ACCESS SPACE.
2. CONNECT THE NEW DOMESTIC COLD WATER LINE TO AN EXISTING COLD WATER LINE OF EQUAL OR GREATER SIZE. FIELD VERIFY THE EXACT LOCATION AND SIZE OF THE EXISTING WATER LINE PRIOR TO CONSTRUCTION. ADJUST THE NEW WATER LAYOUT AS REQUIRED TO ALLOW FOR CONNECTION TO THE EXISTING WATER SYSTEM.
3. FURNISH AND INSTALL WATER HEATER AND EXPANSION TANK ON HOUSEKEEPING PAD AS INDICATED ON THE PLANS. REFER TO ARCHITECTURAL PLANS FOR EXACT WATER HEATER LOCATION. PIPE WATER HEATER PRESSURE/TEMPERATURE RELIEF DISCHARGE TO THE NEAREST FLOOR DRAIN BELOW THE WATER HEATER IN ACCORDANCE WITH LOCAL REQUIREMENTS. PROVIDE A CODE APPROVED AIR GAP ON THE DISCHARGE OF THE WATER HEATER PRESSURE/TEMPERATURE RELIEF. REFER TO DETAILS SHEET FOR ADDITIONAL INFORMATION.
4. 1/2" FLEXIBLE CONTINUOUS TYPE "K" COPPER TUBING BELOW GRADE FROM TRAP PRIMER TO FLOOR DRAIN. NO FITTINGS OR SPLICES ARE ALLOWED BELOW GRADE.
5. INSTALL TRAP PRIMER PER MANUFACTURER'S REQUIREMENTS. COORDINATE EXACT LOCATION IN THE FIELD. FURNISH AND INSTALL A LOCKABLE, METAL ACCESS PANEL AS NECESSARY TO MAINTAIN EQUIPMENT.
6. PROVIDE THERMOSTATIC MIXING VALVE, POWERS #LFE480 OR EQUAL, BELOW FIXTURE. SET TEMPERATURE AS REQUIRED BY LOCAL JURISDICTION. THERMOSTATIC MIXING VALVE SHALL BE IN ACCORDANCE WITH ANSI/ASSE 1070.
7. THIS SPACE IS RESERVED FOR THE DOMESTIC WATER SERVICE ENTRANCE. REFER TO THE DETAIL SHEETS FOR ADDITIONAL INFORMATION. THE DOMESTIC WATER SERVICE ENTRANCE SHALL COMPLY WITH ALL STATE AND LOCAL REQUIREMENTS AND SHALL BE INSTALLED IN ACCORDANCE WITH THE MANUFACTURER'S RECOMMENDATIONS.
8. PROVIDE 3/4" NPT STEEL PIPE INSIDE WALL. STUB 18" FROM WALL FOR CONNECT BY VENDOR. INSTALL PER VENDER RECOMMENDATIONS.
9. MOUNT THE WALL HYDRANT AT A MINIMUM OF 2'-0" ABOVE FINISHED GRADE.
10. NEW NATURAL GAS METER SERVING 1,993 MBH. THE SYSTEM DESIGN IS BASED ON 2 PSI DELIVERY PRESSURE WITH A PRESSURE DROP OF 1 PSI AND A TOTAL DEVELOPED LENGTH OF 115 FEET. THE CONTRACTOR SHALL COORDINATE THE METER PLACEMENT, AVAILABLE PRESSURE, AND ANY NEW SERVICE REQUIREMENTS WITH THE LOCAL UTILITY PRIOR TO CONSTRUCTION. IF THE DELIVERY PRESSURE INDICATED IS NOT AVAILABLE FROM THE UTILITY COMPANY, THE CONTRACTOR SHALL NOTIFY THE ARCHITECT/ENGINEER IMMEDIATELY.
11. PROVIDE GAS TEST PORT TO TEST GAS PRESSURE PRIOR TO EQUIPMENT START UP. SEE DETAIL FOR MORE INFORMATION.
12. CONNECT NATURAL GAS SERVICE TO UNIT IN ACCORDANCE WITH THE MANUFACTURER'S RECOMMENDATIONS. REFER TO DETAIL SHEET FOR ADDITIONAL INFORMATION. VERIFY EXACT LOCATION OF NATURAL GAS CONNECTION ON ROOFTOP UNIT WITH EQUIPMENT PRIOR TO PIPE INSTALLATION.
13. FURNISH AND INSTALL A UL LISTED EMERGENCY NATURAL GAS SHUTOFF VALVE MOUNTED BELOW THE FINISHED CEILING IN AN ACCESSIBLE LOCATION. THE SHUTOFF VALVE SHALL BE INTERLOCKED WITH THE EXHAUST HOOD AND SHALL HAVE A MANUAL RESET. COORDINATE EXACT VALVE TYPE WITH HOOD MANUFACTURER. THE VALVE SHALL BE PROVIDED AND INSTALLED BY THE PLUMBING CONTRACTOR AND SHALL BE INTERCONNECTED BY THE FIRE ALARM CONTRACTOR. COORDINATE THE VALVE LOCATION WITH THE CONSTRUCTION MANAGER PRIOR TO INSTALLATION.
14. STUB UP BEVERAGE CONDUIT WITH CHILLED FW ABOVE SLAB AND ROUTE LINES TO WATER FILLER. REFERENCE ARCHITECTURAL AND KITCHEN DRAWINGS FOR INSTALLATION.
15. ALL PIPING DOWN STREAM OF BACKFLOW PREVENTER SHALL BE STAINLESS STEEL.

Bergmeyer
LA - 800 South Figueroa St. Suite 1100 Los Angeles, CA 90017 212.337.1090
BOS - 51 Sleeper St. 4th Floor Boston, MA 02210 617.542.1025
www.bergmeyer.com

CONSULTANTS:
Schnackel engineers
800-581-0963
www.schnackel.com
SE JOB# 200363

SEAL/ SIGNATURE:
STATE OF MISSOURI
GREGORY ROY SCHNACKEL
NUMBER
E-28570
Date: 03/05/21
COA #: E-2009006642

| NO. | BY | DATE | DESCRIPTION |
|---|---|---|---|
| 1 | | 2021-03-09 | ADDENDUM #1 |
| | | 2021-01-11 | PERMIT/BID SET |
| | | 2020-12-21 | 75% SET |
| | | 2020-10-12 | DD SET |

SHAKE SHACK

SHAKE SHACK - LEE'S SUMMIT MO

LEE'S SUMMIT
MISSOURI
SHACK #1348

PERMIT/BID SET

PLUMBING WATER & GAS PLAN

| | |
|---|---|
| DRAWN BY: | MJS |
| CHECKED BY: | GRS |
| JOB NO: | 20068.00 |

P120

RELEASE FOR CONSTRUCTION
AS NOTED ON PLANS REVIEW
DEVELOPMENT SERVICES
LEE'S SUMMIT, MISSOURI
03/10/2021

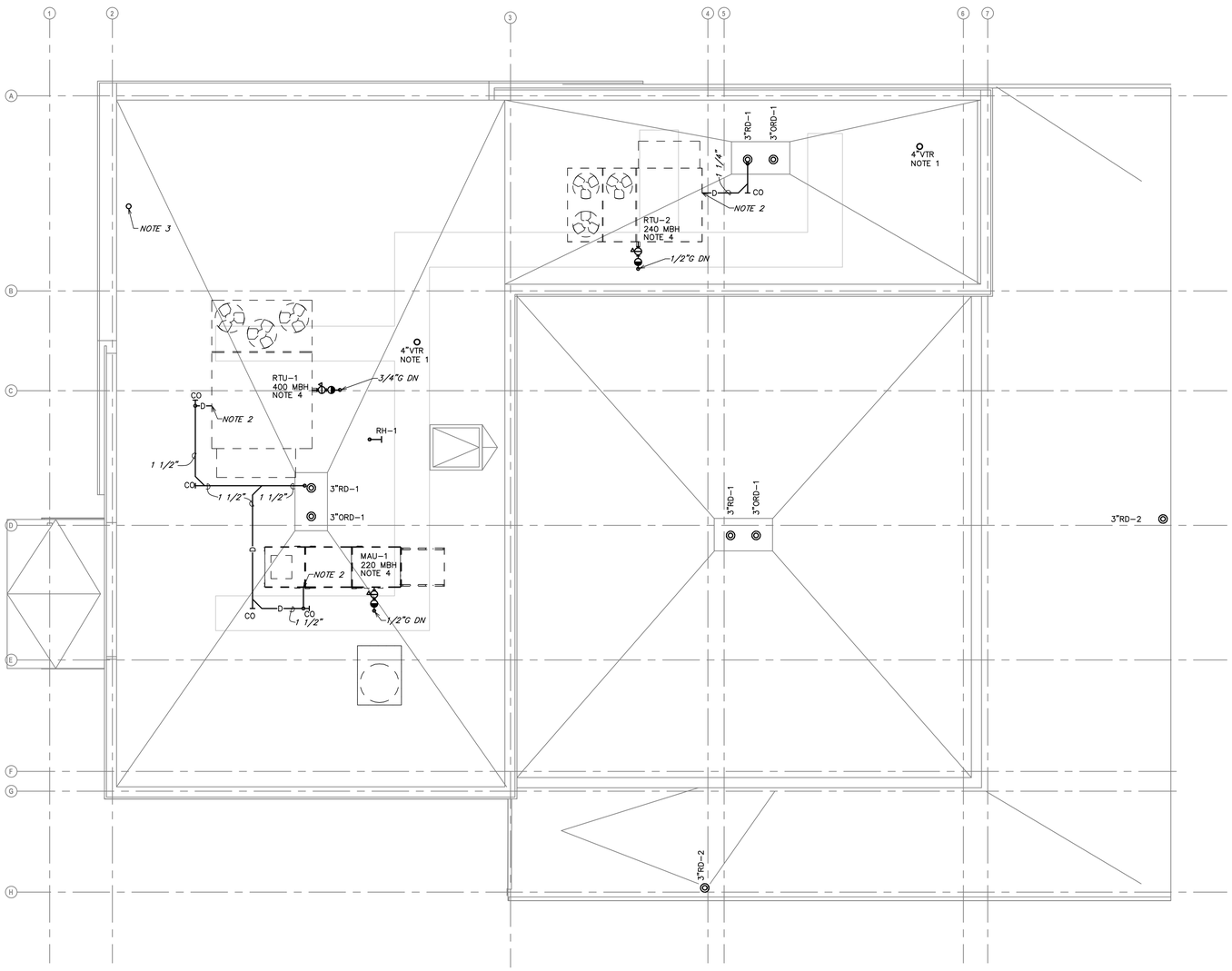


1 PLUMBING ROOF PLAN
SCALE: 1/4" = 1'-0"

| PLUMBING FIXTURE SCHEDULE | |
|---|---|
| Mark | |
| WC-1 | WATER CLOSETS |
| LAV-1 | LAVATORIES |
| UR-1 | URINAL |
| WH-1 | WALL HYDRANT |
| RH-1 | ROOF HYDRANT |
| K-36 | GENERIC FIXTURE: COMMERCIAL KITCHEN, COMMERCIAL ICE MACHINE |
| K-40 | FLOOR MOP SINK |
| K-45A | GENERIC FIXTURE: COMMERCIAL KITCHEN, KITCHEN HAND SINK |
| K-46A | GENERIC FIXTURE: COMMERCIAL KITCHEN, KITCHEN HAND SINK |
| K-60A | GENERIC FIXTURE: COMMERCIAL KITCHEN, 3-COMP SINK |
| K-60B | GENERIC FIXTURE: COMMERCIAL KITCHEN, 3-COMP SINK |
| K-63 | GENERIC FIXTURE: COMMERCIAL KITCHEN, COMM DISHWASHER W/CHEMICAL SANITATION |
| K-70A | GENERIC FIXTURE: COMMERCIAL KITCHEN, PREP SINK |
| K-160 | CUSTARD MACHINE |
| K-171 | GENERIC FIXTURE: COMMERCIAL KITCHEN, DIPPER WELL |
| K-177 | GENERIC FIXTURE: COMMERCIAL KITCHEN, PREP SINK |
| K-177A | FILTERED WATER FILL |
| K-188 | GENERIC FIXTURE: COMMERCIAL KITCHEN, COMM DISHWASHER W/BOOSTER HEATER |
| K-204 | GENERIC FIXTURE: COMMERCIAL KITCHEN, TEA BREWER |
| K-224 | DRAFT BEER POWER RACK |
| 3"FD-1 | FLOOR DRAIN |
| 3"FS-1 | FLOOR SINK |
| FCO-1 | CLEANOUT - FLOOR |
| WCO-1 | WALL CLEANOUT |
| TP-1 | TRAP PRIMER |

*SEE PLUMBING SCHEDULE ON SHEET P601

**GENERAL NOTES:**

A. THE EXISTING CONDITIONS ARE BASED ON "AS-BUILT" DRAWINGS AND/OR LIMITED FIELD VERIFICATIONS. THE CONTRACTOR SHALL ADJUST TO ACTUAL FIELD CONDITIONS AT NO ADDITIONAL EXPENSE TO THE PROJECT. NO ADDITIONAL COMPENSATION WILL BE PROVIDED FOR ANY EXTRAS DUE TO THE CONTRACTOR'S FAILURE TO VISIT THE PROJECT SITE AND/OR PREDETERMINATION OF EXISTING CONDITIONS PRIOR TO SUBMITTING THE BID. ANY DISCREPANCIES SHALL BE IMMEDIATELY REPORTED TO THE ARCHITECT/ENGINEER FOR RESOLUTION.

B. THE CONTRACTOR SHALL FAMILIARIZE HIMSELF WITH THE INCIDENTAL DEMOLITION WORK PRIOR TO BIDDING AND COMMENCEMENT OF WORK. THE CONTRACTOR IS RESPONSIBLE FOR DEMOLITION OF ALL EXISTING EQUIPMENT AS REQUIRED FOR THE INSTALLATION/CONSTRUCTION OF NEW WORK.

C. ALL WORK SHALL BE COMPLETED IN ACCORDANCE WITH ALL APPLICABLE GOVERNMENTAL AND LOCAL CODE REQUIREMENTS.

D. PROVIDE ACCESS PANELS AS REQUIRED TO ALLOW ACCESS TO VALVES, EQUIPMENT, ETC. LOCATED ABOVE INACCESSIBLE CEILINGS AND WALL CAVITIES.

E. ALL SANITARY LINES AND PLUMBING FIXTURES ON THE PROJECT SHALL HAVE AN APPROVED MEANS OF SEWAGE BACKFLOW PREVENTION. FIXTURE SPECIFIC BACKFLOW PREVENTION INCLUDING AIR GAPS AND VACUUM BREAKERS ARE AN ACCEPTABLE MEANS OF BACKFLOW PREVENTION.

F. PIPE SIZES INDICATED ON THE PLANS ARE MINIMUM. THE CONTRACTOR SHALL PROVIDE PIPE SIZES EQUAL TO OR GREATER THAN THE SPECIFIED SIZES. THE CONTRACTOR MAY INCREASE PIPE SIZES AS REQUIRED AT NO ADDITIONAL EXPENSE TO THE PROJECT.

G. REFER TO THE PLUMBING FIXTURE SCHEDULE FOR INDIVIDUAL PLUMBING FIXTURE CONNECTION SIZE REQUIREMENTS.

H. COORDINATE ALL SLAB PENETRATIONS WITH GENERAL CONTRACTOR PRIOR TO CONSTRUCTION. MAINTAIN A MINIMUM OF 2" CLEARANCE FROM THE EDGE OF THE SLAB OPENING TO ANY STRUCTURAL MEMBERS AND PIPES.

I. SLEEVE OR CORE-DRILL FLOOR SLABS, WALLS, ETC. AS REQUIRED FOR PIPING AND FIRE-STOP OPENING AROUND PIPE. VERIFY LOCATION OF STRUCTURAL BEAMS, JOISTS, ETC. BEFORE DRILLING.

J. THE CONTRACTOR SHALL OBTAIN A COPY OF THE LANDLORD'S TENANT CRITERIA MANUAL PRIOR TO BIDDING. THE TENANT CRITERIA MANUAL REQUIREMENTS SHALL BE INCLUDED IN THE CONTRACTOR CONTRACT. THE CONTRACTOR SHALL BE RESPONSIBLE FOR COMPLYING WITH THE LANDLORD REQUIREMENTS AT NO ADDITIONAL EXPENSE TO THE PROJECT.

K. ALL HANDICAPPED ACCESSIBLE WATER CLOSETS SHALL HAVE THE FLUSHING HANDLE ON THE WIDE SIDE OF THE HANDICAPPED ACCESSIBLE STALL AS REQUIRED BY ADA REQUIREMENTS.

L. ALL PUBLIC USE LAVATORY FAUCETS SHALL HAVE AN AUTOMATIC SAFETY WATER MIXING DEVICE IN ACCORDANCE WITH ANSI/ASSE 1017 OR 1070 AS APPLICABLE.

**PLUMBING NOTES:**

1. 4" VENT THROUGH ROOF. INSTALL VENT THROUGH ROOF A MINIMUM DISTANCE OF 15'-0" FROM ALL FRESH AIR INLETS AND BUILDING OPENINGS.
2. ROUTE THE CONDENSATE PIPING FROM THE ROOFTOP UNIT TO A CODE COMPLIANT DISCHARGE POINT INSIDE THE TENANT SPACE. THE CONDENSATE SHALL BE CONNECTED TO THE ROOFTOP UNIT IN ACCORDANCE WITH THE MANUFACTURER'S RECOMMENDATIONS. VERIFY CONDENSATE REMOVAL REQUIREMENTS WITH LOCAL JURISDICTION PRIOR TO INSTALLATION. IF CONFLICTS OCCUR, NOTIFY THE ARCHITECT/ENGINEER IMMEDIATELY.
3. FURNISH AND INSTALL 4" DIAMETER PVC COMBUSTION AIR AND EXHAUST FROM THE WATER HEATER TO THE EXTERIOR. FURNISH AND INSTALL CONCENTRIC VENT KIT. THE INSTALLATION SHALL BE IN ACCORDANCE WITH THE MANUFACTURER'S RECOMMENDATIONS AND ALL APPLICABLE LOCAL AND STATE CODES. COORDINATE THE MAXIMUM ALLOWABLE EXHAUST AND VENT LENGTHS WITH THE MANUFACTURER'S REQUIREMENTS. INSTALL CONCENTRIC VENT THROUGH ROOF A MINIMUM DISTANCE OF 15'-0" FROM ALL FRESH AIR INLETS AND BUILDING OPENINGS.
4. CONNECT NATURAL GAS SERVICE TO ROOFTOP UNIT IN ACCORDANCE WITH THE MANUFACTURER'S RECOMMENDATIONS. REFER TO DETAIL SHEET FOR ADDITIONAL INFORMATION. VERIFY EXACT LOCATION OF NATURAL GAS CONNECTION ON ROOFTOP UNIT WITH EQUIPMENT PRIOR TO PIPE INSTALLATION.

Bergmeyer
www.bergmeyer.com
BOS - 51 Sleeper St. 4th Floor Boston, MA 02210 617.542.1025
LA - 800 South Figueroa St. Suite 1100 Los Angeles, CA 90017 212.337.1090

CONSULTANTS:

Schnackel engineers
800-581-0963
www.schnackel.com
SE JOB# 200363

SEAL/ SIGNATURE:

STATE OF MISSOURI
GREGORY ROY SCHNACKEL
NUMBER
E-28570
Date: 03/05/21
COA #: E-2009006642

| NO. | BY | DATE | DESCRIPTION |
|---|---|---|---|
| 1 | | 2021-03-09 | ADDENDUM #1 |
| | | 2021-01-11 | PERMIT/BID SET |
| | | 2020-12-21 | 75% SET |
| | | 2020-10-12 | DD SET |

SHAKE SHACK

SHAKE SHACK - LEE'S SUMMIT MO

LEE'S SUMMIT
MISSOURI
SHACK #1348

PERMIT/BID SET

PLUMBING ROOF PLAN

| | |
|---|---|
| DRAWN BY: | MJS |
| CHECKED BY: | GRS |
| JOB NO: | 20068.00 |

P150

RELEASE FOR CONSTRUCTION
AS NOTED ON PLANS REVIEW
DEVELOPMENT SERVICES
LEE'S SUMMIT, MISSOURI
03/10/2021

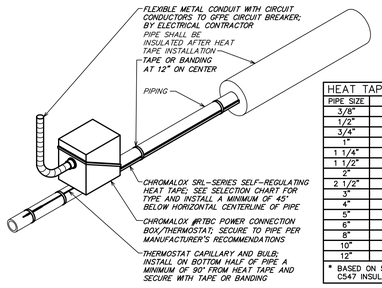


| HEAT TAPE SELECTION CHART | | |
|---|---|---|
| PIPE SIZE | MODEL NUMBER * | W/FT |
| 3/8" | SRL3 | 3 |
| 1/2" | SRL3 | 3 |
| 3/4" | SRL3 | 3 |
| 1" | SRL5 | 5 |
| 1 1/4" | SRL5 | 5 |
| 1 1/2" | SRL5 | 5 |
| 2" | SRL8 | 8 |
| 2 1/2" | SRL8 | 8 |
| 3" | SRL8 | 8 |
| 4" | SRL10 | 10 |
| 5" | SRL8 (2 PASSES) | 16 |
| 6" | SRL8 (2 PASSES) | 16 |
| 8" | SRL8 (2 PASSES) | 16 |
| 10" | SRL10 (2 PASSES) | 20 |
| 12" | SRL10 (2 PASSES) | 20 |

* BASED ON 50° F DELTA T WITH 1" ASTM C547 INSULATION

## 3 HEAT TRACE DETAIL
NOT TO SCALE

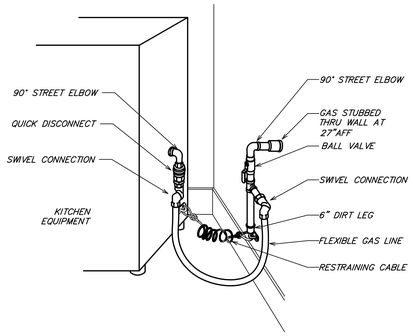


ARRANGEMENT SHOWN IS SCHEMATIC. ADJUST TO SUIT ACTUAL CONDITIONS. MAKE FINAL CONNECTION TO EQUIPMENT AS RECOMMENDED BY MANUFACTURER. PROVIDE WELDED FITTINGS/JOINTS IN ANY CONCEALED, UNSLEEVED LOCATION.

## 6 COOKLINE GAS EQUIPMENT RESTRAINTS
NOT TO SCALE

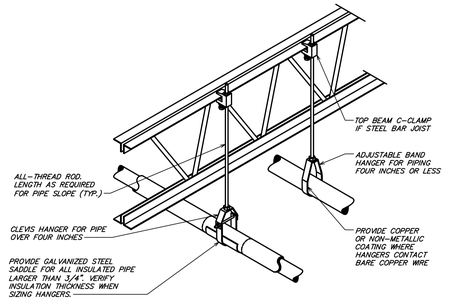


NOTE:
PROVIDE UPPER ATTACHMENT AS REQUIRED FOR CASES NOT SHOWN HERE. DO NOT INSTALL HANGER INSIDE INSULATION OR OTHERWISE PENETRATE VAPOR BARRIER. DO NOT HANG ONE PIPE FROM ANOTHER EXCEPT IN CHASES. TRAPEZE HANGERS MAY BE USED FOR MULTIPLE PARALLEL PIPES. HANGER SPACING FOR PIPE SIZE: COPPER: 4"=12' 3"=11' 2-1/2"=10' 2"=9' 1-1/2"=8' 1-1/4"=7' 1"=6' 3/4"=6' 1/2"=5'. CAST IRON: 10' AND ONE NEAR ALL JOINTS. STEEL: 4"=14' 3"=12' 2-1/2"=11' 2"=10' 1-1/2"=9' 1"=7' 3/4"=6' 1/2"=5'. LOCATE HANGERS AS CLOSE AS POSSIBLE TO TURNS AND TEES OF PIPE. PROVIDE SUPPLEMENTARY STEEL STRUTS BETWEEN JOISTS IF REQUIRED. LOCATE HANGERS TO TAKE LOAD OFF OF EQUIPMENT CONNECTIONS. ANCHOR WATER PIPE AGAINST SWAYING DUE TO CHANGES IN WATER VELOCITY. PROVIDE SEISMIC BRACING IF/AS REQUIRED BY LOCAL AUTHORITIES. CHAINS OR PERFORATED STRAP IRON OR STEEL IS NOT ACCEPTABLE. REFER TO CODES FOR FURTHER INFORMATION.

## 2 PIPE INSULATION DETAIL
NOT TO SCALE

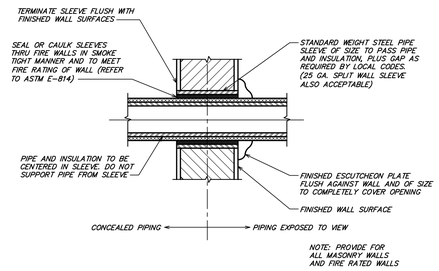


## 11 PIPE SLEEVE AT INTERIOR WALLS
NOT TO SCALE

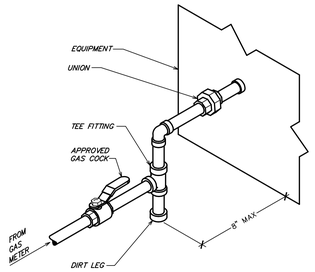


## 9 TYPICAL GAS PIPING CONNECTION DETAIL
NOT TO SCALE

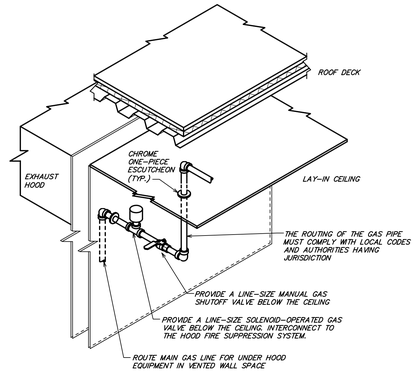


SEQUENCE OF OPERATIONS:

NORMAL MODE:
WHEN HOOD FAN IS ENERGIZED SOLENOID VALVE IS TO OPEN. ON A LOSS OF POWER OR IF THE FAN IS DE-ENERGIZED THE VALVE IS TO CLOSE.

EMERGENCY MODE:
UPON ACTUATION OF THE FIRE SUPPRESSION SYSTEM OR A SIGNAL FROM THE FIRE ALARM, THE SOLENOID VALVE IS TO CLOSE

## 5 KITCHEN GAS SHUTOFF DETAIL
NOT TO SCALE

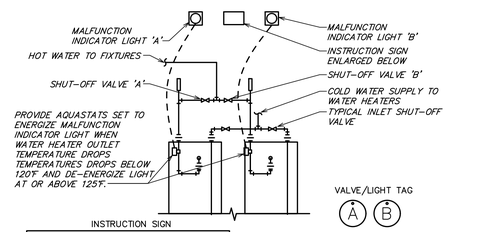


INSTRUCTION SIGN

ATTENTION

LIGHT INDICATES WATER HEATER MALFUNCTION. WHEN LIGHT IS ON TURN VALVE WITH THE TAG, THAT MATCHES THE TAG BELOW THE LIGHT, SO THAT THE LEVER IS PERPENDICULAR TO PIPING AND HAVE MANAGEMENT CALL FOR SERVICE.

PROVIDE TAGS MOUNTED BELOW EACH MALFUNCTION INDICATOR LIGHT AND HANGING FROM HOR WATER SHUT-OFF VALVES. LABEL TAGS AS INDICATED ABOVE.

MALFUNCTION INDICATOR LIGHT
DESCRIPTION: 120V, STEADY-ON RED SIGNALING LIGHT WITH THREADED BASE AND SHATTER RESISTANT POLY-CARBONATE LENS. UL LISTED
- EDWARDS #125 SERIES
- FEDERAL SIGNAL #LP22 SERIES

## 2 WATER HEATER MALFUNCTION INDICATOR LIGHT
NOT TO SCALE

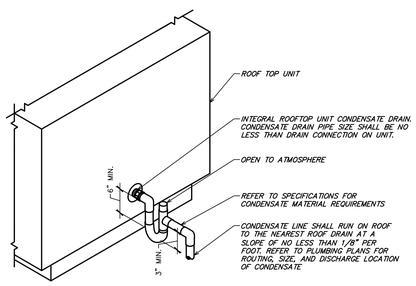


## 10 ROOFTOP UNIT CONDENSATE TRAP
NOT TO SCALE

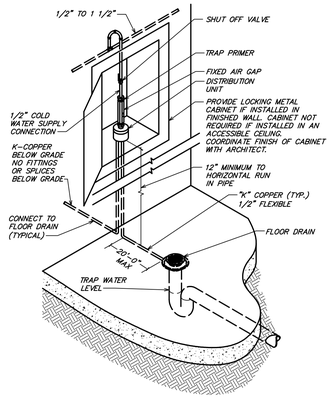


## 8 FLOOR DRAIN TRAP PRIMER DETAIL
NOT TO SCALE

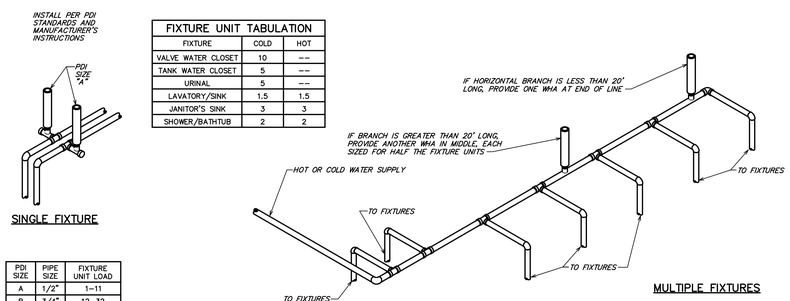


| FIXTURE UNIT TABULATION | | |
|---|---|---|
| FIXTURE | COLD | HOT |
| VALVE WATER CLOSET | 10 | -- |
| TANK WATER CLOSET | 5 | -- |
| URINAL | 5 | -- |
| LAVATORY/SINK | 1.5 | 1.5 |
| JANITOR'S SINK | 3 | 3 |
| SHOWER/BATHTUB | 2 | 2 |

| PDI SIZE | PIPE SIZE | FIXTURE UNIT LOAD |
|---|---|---|
| A | 1/2" | 1-11 |
| B | 3/4" | 12-32 |
| C | 1" | 33-60 |
| D | 1-1/4" | 61-113 |
| E | 1-1/2" | 114-154 |
| F | 2" | 155-330 |

PLUMBING CONTRACTOR SHALL PROVIDE WATER HAMMER ARRESTERS BY SIOUX CHIEF, PRECISION PLUMBING PRODUCTS, WATTS OR APPROVED EQUIVALENT WITH PISTON AND O-RING CONSTRUCTION, HAVING PDI #WH-201, ASSE #1010 AND ANSI #A112.26.1M CERTIFICATION. INSTALL IN HORIZONTAL OR VERTICAL POSITION, BUT NEVER UPSIDE DOWN. INSTALL IN LINE WITH WATER FLOW DIRECTION IF POSSIBLE. SIZE THE UNITS AS SHOWN ON THE DRAWINGS AND/OR PER THE TABLES SHOWN ABOVE.

## 7 WATER HAMMER ARRESTERS
NOT TO SCALE

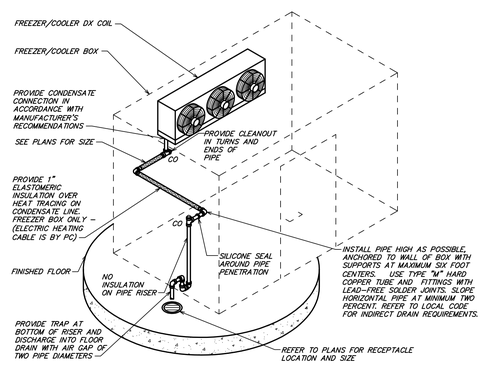


## 4 WALK-IN COOLER/FREEZER CONDENSATE DETAIL
NOT TO SCALE

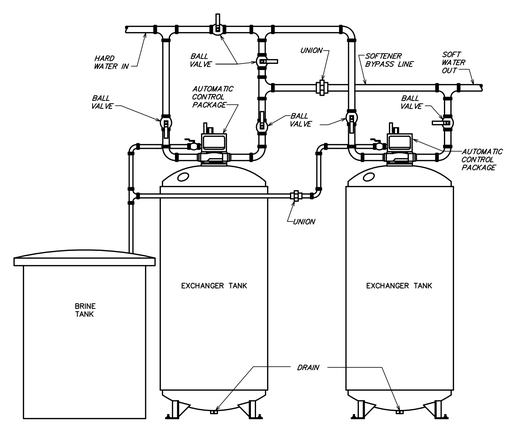


## 1 AUTOMATIC WATER SOFTNER
NOT TO SCALE

Bergmeyer
BOS - 51 Sleeper St. 6th Floor Boston, MA 02210 617.542.1025
LA - 800 South Figueroa St. Suite 1000 Los Angeles, CA 90017 212.337.1090
www.bergmeyer.com

CONSULTANTS:
Schnackel engineers
800-581-0963
www.schnackel.com
SE JOB# 200363

SEAL/ SIGNATURE:
STATE OF MISSOURI
GREGORY ROY SCHNACKEL
NUMBER E-026570
Date: 03/05/21
COA #: E-2009006842

| NO. | BY | DATE | DESCRIPTION |
|---|---|---|---|
| 1 | | 2021-03-09 | ADDENDUM #1 |
| | | 2021-01-11 | PERMIT/BID SET |
| | | 2020-12-21 | 75% SET |
| | | 2020-10-12 | DD SET |

SHAKE SHACK

SHAKE SHACK - LEE'S SUMMIT MO

LEE'S SUMMIT
MISSOURI
SHACK #1348

PERMIT/BID SET

PLUMBING DETAILS

| | |
|---|---|
| DRAWN BY: | MJS |
| CHECKED BY: | GRS |
| JOB NO: | 20068.00 |

P501

RELEASE FOR CONSTRUCTION
AS NOTED ON PLANS REVIEW
DEVELOPMENT SERVICES
LEE'S SUMMIT, MISSOURI
03/10/2021

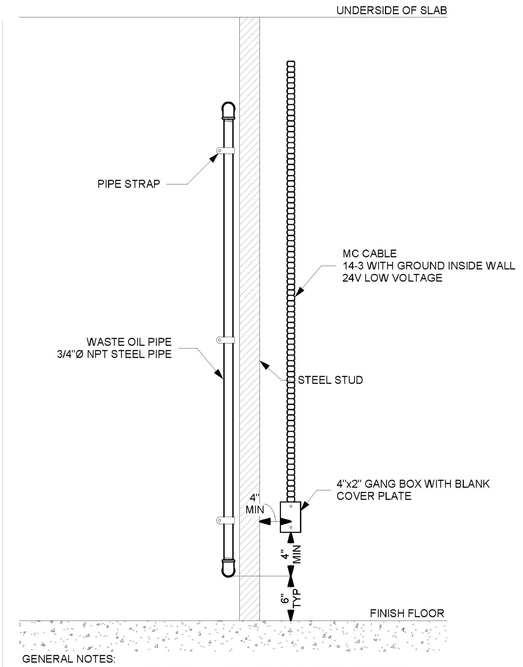


GENERAL NOTES:
1. THE PIPING AND ELECTRICAL ARRANGEMENT IS REQUIRED FOR THE GRIDDLE GREASE UNIT.

9 GRIDDLE RTI DETAIL
NOT TO SCALE

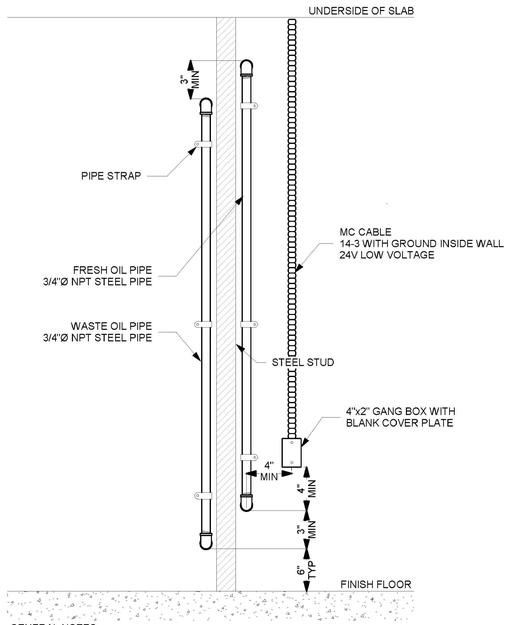


GENERAL NOTES:
1. THE PIPING AND ELECTRICAL ARRANGEMENT IS REQUIRED FOR EACH FRYER.

7 FRYER RTI DETAIL
NOT TO SCALE

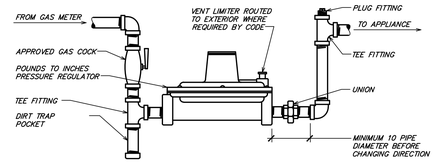


4 NATURAL GAS PRESSURE REGULATOR
NOT TO SCALE

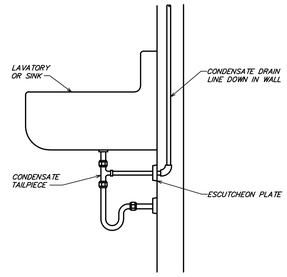


3 CONDENSATE TAILPIECE CONNECTION
NOT TO SCALE

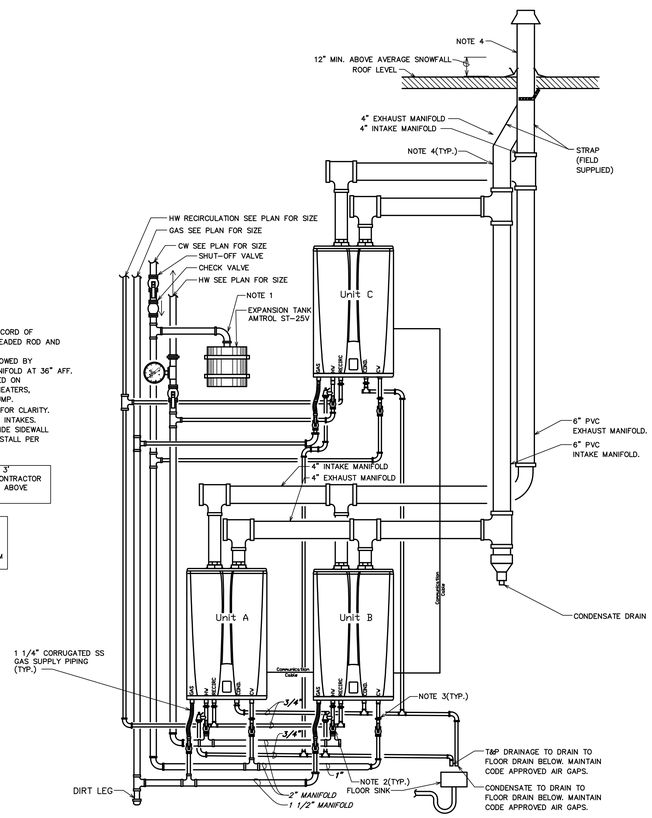


NOTES:
1. SUPPORT EXPANSION TANK FROM TOP CORD OF STRUCTURAL MEMBERS WITH 1/2" THREADED ROD AND 3"X3"X1/4" ANGLE IRON.
2. PROVIDE SHUT-OFF VALVES WHEN ALLOWED BY JURISDICTION. MOUNT COLD WATER MANIFOLD AT 36" AFF.
3. DIELECTRIC UNIONS SHALL BE INSTALLED ON ALL INLETS AND OUTLETS OF WATER HEATERS, SOFTENERS, EXPANSION TANK, AND PUMP.
4. EXHAUST AND INTAKE SHOWN OFFSET FOR CLARITY. MAINTAIN 10'-0" MIN FROM FRESH AIR INTAKES. AT THE OPTION OF THE OWNER, PROVIDE SIDEWALL CONCENTRIC VENT TERMINATIONS & INSTALL PER MANUFACTURER AND CODE.

VENTING MUST BE SUPPORTED EVERY 3' VERTICALLY AND 5' HORIZONTALLY. CONTRACTOR SHALL MAINTAIN MIN. 12" CLEARANCE ABOVE EXHAUST & INTAKE PIPING

NOTE: INSTALLATION OF WATER HEATERS AS PER MANUFACTURERS REQUIREMENTS. WATER HEATERS SHALL BE CONNECTED WITH EQUAL LENGTH PIPING AND SHALL BE LOCATED AN EQUAL DISTANCE FROM EACH OTHER.

8 MULTIPLE TANKLESS WATER HEATER DETAIL
NOT TO SCALE

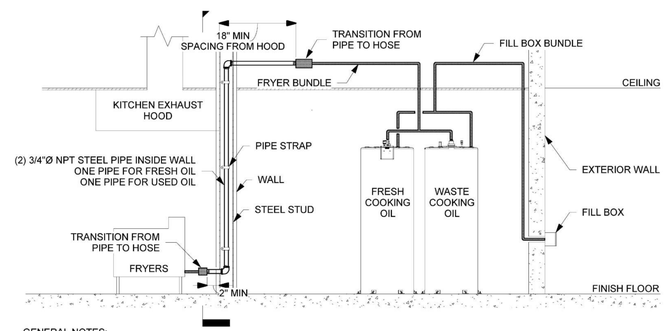


GENERAL NOTES:
1. GREEN HIGHLIGHTED PIPING WILL BE INSTALLED BY RTI.
2. IN STATES WHERE THE WALL THAT HOUSES THE RTI LINE IS REQUIRED TO BE FIRE RATED, THE GC SHALL ASSEMBLY THE PIPE USING LOCTITE 242 THREAD SEALANT ON ALL THREADED CONNECTIONS.

6 RTI SYSTEM DETAIL
NOT TO SCALE




2 FLOOR SINK DETAIL
NOT TO SCALE

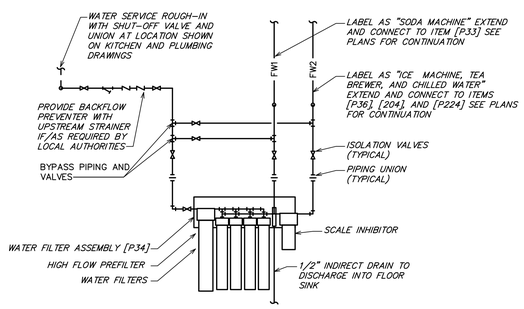


PIPING CONCEALED IN WALL IS SHOWN DASHED. PIPING EXPOSED IS SHOWN CONTINUOUS. PROVIDE ADAPTERS, FITTINGS, UNIONS, AND HARD COPPER TUBE AS REQUIRED. MOUNT FILTER ASSEMBLY ON WALL WHERE SHOWN ON KITCHEN DRAWINGS WHERE EASILY ACCESSIBLE FOR SERVCING. INSTALL BACKFLOW PREVENTER, IF REQUIRED, AT LOCATION AND ELEVATION PER LOCAL AUTHORITIES, WHERE IT CAN BE EASILY SERVICED AND TESTED. VERIFY FILTER CONNECTIONS WITH KITCHEN EQUIPMENT SUPPLIER.

5 WATER FILTER DETAIL
NOT TO SCALE

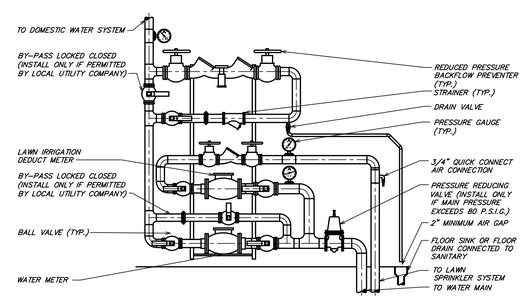


1 DOMESTIC WATER SERVICE DETAIL
NOT TO SCALE

Bergmeyer
BOS - 51 Sleeper St. 6th Floor Boston, MA 02210 617.542.1025
LA - 800 South Figueroa St. Suite 1080 Los Angeles, CA 90017 212.337.1090
www.bergmeyer.com

CONSULTANTS:
Schnackel engineers
800-581-0963
www.schnackel.com
SE JOB# 200363

SEAL/ SIGNATURE:
STATE OF MISSOURI
GREGORY ROY SCHNACKEL
NUMBER E-28570
Date: 03/05/21
COA #: E-2009006642

| NO. | BY | DATE | DESCRIPTION |
|---|---|---|---|
| 1 | | 2021-03-09 | ADDENDUM #1 |
| | | 2021-01-11 | PERMIT/BID SET |
| | | 2020-12-21 | 75% SET |
| | | 2020-10-12 | DD SET |

SHAKE SHACK

SHAKE SHACK - LEE'S SUMMIT MO

LEE'S SUMMIT
MISSOURI
SHACK #1348

PERMIT/BID SET

PLUMBING DETAILS

DRAWN BY: MJS
CHECKED BY: GRS
JOB NO: 20068.00

P502

SECTION 220000 - PLUMBING GENERAL CONDITIONS
SECTION 220501 - TRENCHING AND BACKFILL FOR PLUMBING SYSTEMS
SECTION 220516 - EXPANSION FITTINGS AND LOOPS FOR PLUMBING PIPING
SECTION 220519 - METERS AND GAUGES FOR PLUMBING PIPING
SECTION 220529 - HANGERS AND SUPPORTS FOR PLUMBING PIPING AND EQUIPMENT
SECTION 220548 - VIBRATION AND SEISMIC CONTROLS FOR PLUMBING PIPING AND EQUIPMENT

## SECTION 220000 - PLUMBING GENERAL CONDITIONS

PART 1 GENERAL
1.01 SUMMARY
A. This section supplements all sections of the Specifications for this Division and shall apply to all phases of work hereinafter specified, shown on the Contract Documents, or required to provide a complete installation of approved plumbing systems.
B. All drawings and specifications, including drawings and specifications related to other divisions, apply to the work. Where conflicts arise between documents, the more stringent requirement shall apply, subject to the interpretation of the Engineer.
C. Furnish all labor, material, services, and skilled supervision necessary for the construction, erection, installation, connections, testing, and adjustment of all materials and plumbing equipment specified herein, or shown or noted on the Drawings, and its delivery to the Owner, complete in all respects and ready for use.
D. Products furnished but not installed under this section:
1. Where plans indicate fixtures or equipment will be furnished by this Contractor for installation by other Contractors, this Contractor shall furnish all such equipment, complete in all respects and ready for installation.
2. Drawings, instructions, and manuals supplied with equipment furnished under this Division, but installed under other Divisions shall be carefully preserved and turned over to the installing Contractor.
E. Products installed but not furnished under this section:
1. Where plans indicate fixtures or equipment will be furnished by others, this Contractor shall provide all rough-in and supplies and shall connect such equipment to the plumbing systems.
2. Drawings, instructions, and manuals supplied with equipment furnished under separate Divisions but installed under this Division shall be carefully preserved and turned over to the Architect.
1.02 DEFINITIONS
A. The following definitions apply throughout the drawings and specifications associated with the work performed under this Division.
1. Authority Having Jurisdiction: All regulatory agencies, including but not limited to, plans examiners, fire marshals, inspectors, insurance carriers, and utility companies.
2. Concealed: Hidden from sight in chases, furred spaces, shafts, hung ceilings, embedded in construction, in crawl spaces, or underground.
3. Conduit: Conduit or tubing and all required fittings, pull boxes, hangers, and other supports and accessories related to such.
4. Code: All applicable codes, including but not limited to the administrative code, building code, electrical code, energy conservation code, existing building code, fire code, fuel gas code, mechanical code, plumbing code, and residential code.
5. Code, Administrative: The administrative code, including all local amendments and reference standards, adopted and enforced by the Authority Having Jurisdiction.
6. Code, Building: The administrative code, including all local amendments and reference standards, adopted and enforced by the Authority Having Jurisdiction.
7. Code, Electrical: The electrical code, including all local amendments and reference standards, adopted and enforced by the Authority Having Jurisdiction.
8. Code, Energy Conservation Code: The energy conservation code, including all local amendments and reference standards adopted and enforced by the Authority Having Jurisdiction.
9. Code, Existing Building: The existing building code, including all local amendments and reference standards, adopted and enforced by the Authority Having Jurisdiction.
10. Code, Fire: The fire code, including all local amendments and reference standards, adopted and enforced by the Authority Having Jurisdiction.
11. Code, Fuel Gas: The fuel gas code, including all local amendments and reference standards, adopted and enforced by the Authority Having Jurisdiction.
12. Code, Mechanical: The mechanical code, including all local amendments and reference standards, adopted and enforced by the Authority Having Jurisdiction.
13. Code, Plumbing: The plumbing code, including all local amendments and reference standards, adopted and enforced by the Authority Having Jurisdiction.
14. Code, Residential: The residential code, including all local amendments and reference standards, adopted and enforced by the Authority Having Jurisdiction.
15. Connect: To bring service to the equipment and make final attachment including necessary switches, outlets, boxes, terminations, etc.
16. Contract Documents: All drawings, specifications, specified reference standards, applicable codes, manufacturer's installation instructions, and executed legal documents related to the project.
17. Contractor: The contractor(s) or subcontractor(s) responsible for performing the work associated with Divisions 26, 27, and 28, and ultimately the General Contractor.
18. Drawings: All plans, details, equipment schedules, diagrams, sketches, etc. issued for the construction of the work.
19. Exposed: Not concealed.
20. Furnish: To supply and deliver, unload, and inspect for damage.
21. Install: To unpack, assemble, erect, apply, place, finish, cure, protect, clean, connect, and place into operation into the work.
22. Owner: The entity, including authorized representatives, to which the work is being provided.
23. Provide: To furnish and install.
24. Work: The construction and services, including all labor, materials, and equipment, required by the contract documents to fulfill the Contractor's obligations. The work may constitute the whole or a part of the project.
1.03 CODES AND STANDARDS
A. Perform work in accordance with code requirements.
B. Perform work in accordance with:
1. Occupational Safety and Health Administration (OSHA) Regulations.
2. Americans with Disabilities Act (ADA).
3. The Authority Having Jurisdiction (AHJ).
4. Landlord requirements including Tenant Criteria Manuals and Lease Exhibits.
5. Utility company requirements. Make all arrangements with the utility companies for proper coordination of the work.
C. All Referenced Standards identified in the specifications apply to the work as if they were incorporated into the specifications in their entirety. It shall not be necessary to specifically reference one of these Referenced Standards for the requirements of the Referenced Standards to apply to the work. If there is a conflict between the requirements of a Referenced Standard and the drawings or specifications, it is the responsibility of this Contractor to notify the Engineer of the discrepancy and obtain direction as to which standard applies prior to proceeding.
D. Code, Landlord, and utility company requirements supersede any requirements of the contract documents.
E. The contract documents take precedence where the contract documents exceed code, Landlord, utility, or referenced standards requirements.
1.04 PERMITS AND FEES
A. Permits, licenses, fees, inspections and arrangements required for the work under this Contract shall be obtained by the Contractor at his expense, unless otherwise indicated.
B. All fees and scheduling associated with obtaining an accurate water flow test shall be at the Contractor's expense.
1.05 PREPARATION
A. The Contractor is responsible to obtain, fully understand, and coordinate the work with the complete set of Contract Documents. Any required corrections, including all associated costs, arising from issues caused by the Contractor's failure to understand and/or coordinate the work with the complete set of Contract Documents are the Contractor's sole responsibility.
B. Work under these sections is diagrammatic unless indicated otherwise and is intended to convey the scope of work and indicate the general arrangement of piping, equipment, and accessories. Follow these drawings in laying out the work and verify spaces for the installation of these materials and equipment. Wherever a question exists as to the exact intended location of pipe, sprinklers, or equipment, obtain instructions from the Architect before proceeding with the work.
C. Notify the Architect/Engineer for resolution if a discrepancy is discovered within the Contract Documents. Failure of the Contractor to notify the Architect/Engineer of discrepancies shall result in the resolution becoming the Contractor's responsibility and subject to the Architect/Engineer's review and possible rejection. Should the Architect/Engineer reject a discrepancy resolution of which they were not notified, the Contractor is fully responsible to correct the installation, including all associated costs, until approval of the installation is given by the Architect/Engineer.
1.06 EXISTING CONDITIONS
A. Verify all existing conditions prior to beginning work.
B. Any existing conditions indicated are based on information provided by others and possible limited field verification.
C. Visit the project site, review existing conditions against the contract documents, and become familiar with the work prior to bidding and start of the work.
1. Adjust for actual field conditions at no additional expense to the Owner.
2. If major discrepancies are found, the Contractor shall advise the Architect/Engineer of such deviations in writing so that the appropriate modifications to the design can be made without delay to the project.
a. The Contractor assumes full responsibility of adjusting for discrepancies of which the Architect/Engineer is not informed.
3. Signing the contract is an acknowledgement that the site visit has been completed and the existing conditions are accepted.
D. Verify field measurements are as indicated.
E. Verify all pipe locations and sizes in field prior to fabrication or installation.
F. Verify all equipment locations in field prior to installation. Coordinate final locations with all trades.
G. The Owner shall have first salvage right on all demolished equipment and materials. The Contractor shall dispose of all demolished equipment and materials the Owner rejects.
H. Where connections are made between new work and existing work, the connections shall be made by using materials and methods to suit the actual conditions.
I. Where existing conditions are shown to be removed, by means of a hatched pattern, on the Drawings, this Contractor shall perform all work required for removal. Existing pipe run-outs shall be removed all the way back to mains and capped using appropriate methods.
J. Where existing work is to be modified, it shall be done in conformance with these specifications. Materials used shall be same as existing except where specified otherwise.
1.07 SUBMITTALS
A. Furnish the Architect/Engineer product data and/or shop drawings, as specified in the individual specification sections, for review.
1. Only submittals specifically required to be provided for Architect/Engineer review within the individual specification sections will be reviewed by the Engineer.
B. Indicate the corresponding equipment tag on each unique component or piece of equipment.
C. Indicate all proposed catalog numbers.
D. Product data shall consist of manufacturer's standard catalog pages and/or cut-sheets.
E. Submittals shall be concise and to the point, demonstrating the key performance parameters indicated in the contract documents, major dimensions, and identifying the materials used to manufacture the products. Submittals shall directly address the specific requirements of the contract documents without unnecessary, superfluous information such as non-applicable catalog pages, non-applicable cut sheets, and/or sales brochures. Submittals that are deemed overly voluminous and/or non-specific to the requirements of the contract documents will be returned without Engineer review.
F. The Architect/Engineer's review shall not relieve the Contractor from responsibility for errors within the submittals.
G. If a submittal deviates from the requirements of the contract documents, the Contractor shall advise the Architect/Engineer of the deviation in writing accompanying the submittal, including the reason for the deviation.
H. Submittals are reviewed only for general compliance with the Contract Documents. Dimensions, quantities and details are not checked during submittal review. Review of the submittals does not relieve the Contractor of the responsibility for providing all materials, equipment and accessories necessary for a complete and operational system meeting the requirements of the project and the intent of the Contract Documents. The responsibility for coordination of substituted materials and equipment lies solely with the substituting Contractor.
1.08 QUALITY ASSURANCE
A. Manufacturer Qualifications: Company specializing in manufacturing the Products specified in this section with minimum five years' experience.
B. Installer Qualifications: Company specializing in performing the work of this section with minimum five years' experience. Approved by manufacturer.
C. All Products:
1. Listed and classified by Underwriters Laboratories Inc. as suitable for the purpose specified and indicated.
2. Listed and classified by the local Department of Buildings and furnished with an acceptance number, where applicable.
3. Listed and classified by the Landlord's and/or Owner's insurance carrier, where applicable.
D. All equipment and components shall be free of all rust/corrosion or any visible damage. All items not complying with this requirement shall be replaced at no additional cost to the Owner.
E. Equipment performance and accessories shall be as scheduled on the Drawings and specified herein. Inclusion in both locations is not a prerequisite to inclusion in the Contract. Equipment and accessories specified in either location shall be included in the Contract. Provide all necessary accessories and connections as required for a complete, functional system, including all required components reasonably inferred to as necessary although such components may or may not be specifically indicated on the Drawings or within the Specifications.
F. Code or utility company requirements shall supersede any conflicting requirements of this section.
G. Fill Composition Test Reports: Results of laboratory tests on actual materials used; Compaction Density Test Reports.
1.09 DELIVERY, STORAGE, AND HANDLING
A. Receive, inspect, handle, and store products in accordance with manufacturer's instructions. Protect products from physical damage.
B. Provide temporary protective coating on cast iron and steel valves.
C. Provide temporary end caps and closures on piping and fittings. Maintain in place until installation.
D. Protect motors stored on site from weather and moisture by maintaining factory covers and suitable weatherproof covering. For extended outdoor storage, remove motors from equipment and store separately.
1.10 WARRANTY AND GUARANTEE
A. Provide a complete parts and labor warranty and guarantee on all systems installed for a period of one year from Owner acceptance of the completed facility. This warranty and guarantee shall cover all failures of any equipment, materials or installation, unless such failure is directly attributable to vandalism, or causes other than defects in material or workmanship.
B. Additional warranty and guarantee terms in excess of this requirement are specified within the individual sections of Division 22.

PART 2 PRODUCTS
2.01 SUBSTITUTIONS
A. The manufacturers listed are listed to set minimum standards for quality, design, and functionality. The products of other manufacturers may be submitted, at the Contractor's option, during shop drawing review unless indicated otherwise. The products of other manufacturers shall meet or exceed all requirements of the Contract Documents. The Contractor accepts all responsibility for costs and coordination issues arising out of the substitution of materials or equipment, and the coordination of such substitutions with all other contractors and subcontractors.
2.02 Source Limitations: Furnish equipment and associated components and accessories produced by a single manufacturer and obtained from a single supplier.

PART 3 EXECUTION
3.01 COORDINATION OF WORK
A. Examine the Contract Documents as a whole for the work of other trades. Coordinate all work accordingly.
B. Work lines and established heights shall be in strict accordance with the contract documents. Verify all dimensions shown and establish all elevations and detailed dimensions not shown.
C. Promptly report to the Architect any delay or difficulties encountered in the installation of the work, which might prevent prompt and proper installation, or make it unsuitable to connect with or receive the work of others. Failure to so report shall constitute an acceptance of the work of other trades as being fit and proper for the execution of this work.
D. Plan, lay out, and coordinate the work with all trades well enough in advance so that it proceeds with a minimum of interference to work that has not been completed and work that is in progress.
1. Inform all trades of openings required for the work and provide all special frames, sleeves, and anchor bolts required.
2. The plumbing system layout may be altered to suit the conditions, prior to the installation of any work and without additional cost to the Owner.
3. Perform all work in compliance with the contract documents and afford other trades reasonable opportunity for the execution of their work.
4. Properly connect and coordinate this work with the work of other trades at such time and in such a manner as not to delay or interfere with their work.
5. Conflicts arising from lack of coordination shall be the Contractor's responsibility.
a. The Contractor shall pay for all extra cutting and patching made necessary by his failure to properly direct such work at the correct time.
E. Wherever pipe runs in or above ceilings or walls, the Contractor shall arrange the run of pipe in such a manner that it does not interfere with grilles, diffusers, outlet boxes, luminaires, or other ceiling mounted items.
F. Install systems, materials and equipment to provide for maximum headroom. Maintain access to equipment requiring service when selecting mounting elevations.
G. Install plumbing equipment to facilitate servicing, maintenance, and repair or replacement of equipment components. As much as practical, connect equipment for ease of disconnecting, with minimum of interference with other installations.
H. Install systems, materials and equipment level and plumb, parallel and perpendicular to building lines where exposed to view, unless otherwise indicated.
I. Manufacturer's instruction sheets shall be followed explicitly in the installation of all equipment. Where manufacturer's instruction sheets conflict with requirements of these specifications or the Drawings, such conflicts shall be brought to the attention of the Architect/Engineer for clarification.
J. All roofing penetrations shall be flashed and weather sealed by the roofing manufacturer's authorized roofing contractor at this Contractor's expense. This Contractor shall contract with the factory authorized roofing contractor for the specific roofing system applicable to this Project. The use of an unauthorized roofing contractor may result in removal and replacement of the penetration systems at this Contractor's expense.
K. Although all such work is not specifically indicated, furnish and install all supplementary or miscellaneous items, appurtenances and devices incidental to or necessary for a sound, secure and complete installation.
L. Verify and coordinate all requirements and installation details of all materials and equipment that are to be furnished under other Divisions and installed or connected under this Division prior to rough-in. Conflicts arising from lack of coordination shall be this Contractor's responsibility. As such, the Contractor is responsible to:
1. Obtain and review shop drawings, product data, manufacturer's wiring diagrams, and manufacturer's instructions for equipment furnished under other sections.
2. Determine connection locations and requirements.
3. Sequence rough-in of plumbing connections to coordinate with installation of equipment.
M. Utilize galvanized steel hangers and supports in all wet, damp, and corrosive environments, including all exterior locations.
N. Where crane rental or other erection is required, such costs shall be included in the plumbing contract, unless specific arrangements are made with the General Contractor to cover these costs.
O. Verify that mounting surfaces are ready to receive support and attachment components.
P. Verify that conditions are satisfactory for installation prior to starting work.
3.02 COORDINATION DRAWINGS
A. Prepare coordination drawings to a scale of 1/4"=1'-0" or larger; detailing major elements, components, and systems of plumbing equipment and materials in relationship with other systems, installations, and building components. Indicate locations where space is limited for installation and access and where sequencing and coordination of installations are of importance to the efficient flow of the work, including (but not necessarily limited to) the following:
1. Indicate the proposed locations of conduits, equipment, and materials. Include the following:
a. Clearances required for maintaining Code required working space.
b. Equipment connections and support details.
c. Exterior wall and foundation penetrations.
d. Fire-rated wall and floor penetrations.
e. Sizes and location of required concrete pads and bases.
f. Indicate scheduling, sequencing, movement, and positioning of large equipment into the building during construction.
g. Prepare floor plans, elevations, and details to indicate penetrations in floors, walls, and ceilings and their relationship to other penetrations and installations.
2. Coordination drawings are for use between the different construction trades and will not be reviewed by the Architect/Engineer.
3.03 INTERFACES
A. Install all pipe, equipment, and accessories to preserve fire resistance rating of partitions and other elements, using materials and methods specified.
3.04 FIELD QUALITY CONTROL
A. Provide tests as necessary to establish the adequacy, quality, safety, completed status, and suitable operation of each system.
B. Install all equipment, devices, pipe, and materials securely and in a neat and workmanlike manner in accordance with all applicable standards and codes.
C. Install all equipment, pipe, and materials plumb and level and align and adjust for satisfactory operation.
D. Install all equipment, pipe, and materials in accordance with the manufacturer's instructions and recommendations.
E. Inspect all equipment, pipe, and materials for defects.
3.05 ERECTION
A. Rigging:
1. The Plumbing Contractor shall arrange for all labor and equipment required for the proper installation of the plumbing equipment in the locations indicated on the Drawings. Where crane rental or other erection is required, such costs shall be included in the Plumbing Contract, unless specific arrangements are made with the General Contractor to cover these costs.
B. Supplemental Framing:
1. Provide the design, fabrication, and erection of supplementary structural framing required for attachment of hangers or other devices supporting plumbing equipment. Provide framing members of standard rolled steel shapes, A-36 steel. Provide members welded to structural members equal to the specification for the main structural member. Provide "simple beam" type framing with end connections welded or bolted for shear loads. Use cantilevers when detailed or specifically approved by the Architect/Engineer. The Architect/Engineer's approval is required for location of supplementary framing. Use only certified welders. Design framing members for their actual loads, with allowable stresses specified by AISC, without excessive deflection and with consideration for rigidity under vibration, in accordance with standard structural practices. Show on shop drawing supplementary framing, including design loads, member size and location.
3.06 CUTTING, PATCHING, AND PIERCING
A. Cutting of openings and installation of sleeves or frames through walls and surfaces shall be done in a neat workmanlike manner. Openings shall be cut only as large as required for the installation; sleeves and/or frames installed flush with finished surfaces and grouted in place. Surfaces around openings shall be left smooth and finished to match surrounding surface.
B. Obtain written permission of the Architect/Engineer before cutting or piercing structural members. Use craftsmen skilled in their respective trades for cutting, fitting, repairing, patching of plaster, and finishing of materials including carpentry work, metal work or concrete work required for this work.
C. Do not weaken walls, partitions, or floors with cutting. Holes required to be cut in floors must be drilled without breaking out around the holes. The Architect/Engineer will determine suitability of patching and/or refinishing requirements.
D. The Plumbing Contractor is responsible for patching of all openings resulting from the installation or removal of plumbing equipment or materials.
E. Provide and maintain temporary partitions or dust barriers adequate to prevent the spread of dust and dirt to adjacent areas.
F. Patch existing finished surfaces and building components using new materials matching existing materials and experienced Subcontractors.
G. Fire and Smoke Partition Penetrations: The Contractor shall familiarize himself with all fire rated construction and install his work so as to maintain the integrity of the fire code rating. Maintain rating of fire rated and smoke rated construction. Seal annular space around conduits. For fire and smoke rated floors, walls and partitions, use UL listed material that maintains fire rated wall and floor integrity.
3.07 CLEANING AND REPAIR
A. Clean plumbing parts to remove harmful materials.
B. Clean exposed surfaces of all pipe, equipment, and accessories of all dirt, debris, splatter, and other deleterious materials. Follow the manufacturer's recommendations for cleaning as applicable.
C. Repair or replace damaged pipe, equipment, and accessories, as directed by and to the satisfaction of the Architect, where marring or disfigurement has occurred. All pipe, equipment, and accessories shall be new.
3.08 TESTING AND INSPECTION
A. Upon completion, the entire system shall be tested under operating conditions.
1. All equipment shall be tested under service conditions and proven to operate properly and noiselessly.
2. All additional tests as required throughout this Specification shall be completed with results reported back to the Architect/Engineer for review.
B. Operate all equipment, after installation and connection. Inspect for improper connections and operation and correct deficiencies as required.
C. Inspection:
1. Upon completion of the work, the Contractor shall obtain certificates of inspection and approval from all City and State Authorities Having Jurisdiction.
3.09 PROJECT CLOSEOUT
A. Project Record Documents:
1. Provide one printed copy and one electronic copy of project record drawings to the Owner.
2. These drawings shall remain at the construction site throughout construction and shall be updated on a daily basis.
3. These drawings shall be available for review by the Architect/Engineer at all times.
4. Include information required in the individual specification sections.
B. Operation and Maintenance Data:
1. Provide one printed copy and one electronic copy of operation and maintenance data to the Owner, including:
a. All submittals required in the individual specification sections.
b. All manufacturers' warranty information.
c. All certificates of compliance with testing or regulatory requirements.
d. All test reports.
2. Organize all information by specification section.

END OF SECTION

## SECTION 220501 - TRENCHING AND BACKFILL FOR PLUMBING SYSTEMS

PART 1 GENERAL
1.01 DEFINITIONS
A. Subgrade Elevations: 4 inches (100 mm) below finish grade elevations indicated on drawings, unless otherwise indicated.
B. Finish Grade Elevations: 4 inches (100 mm) above subgrade elevations indicated on drawings, unless otherwise indicated.
1.02 SUBMITTALS
A. Submittals for Architect/Engineer review are not required.
B. Provide the following to the Owner upon project closeout:
1. Fill Composition Test Reports: Results of laboratory tests on actual materials used.
2. Compaction Density Test Reports.
1.03 PROJECT CONDITIONS
A. Provide sufficient quantities of fill to meet project schedule and requirements. When necessary, store materials on site in advance of need.
B. When fill materials need to be stored on site, locate stockpiles where designated.
1. Separate differing materials with dividers or stockpile separately to prevent intermixing.
2. Prevent contamination.
3. Protect stockpiles from erosion and deterioration of materials.
C. Verify that survey bench marks and intended elevations for the Work are as indicated.
D. Protect plants, lawns, rock outcroppings, existing construction, and other features to remain.
E. Protect bench marks, survey control points, existing structures, fences, sidewalks, paving, and curbs from excavating equipment and vehicular traffic.
F. Code requirements shall supersede any conflicting requirements of this section.

PART 2 PRODUCTS
2.01 FILL MATERIALS
A. General Fill: Subsoil excavated on-site.
1. Graded.
2. Free of lumps larger than 3 inches (75 mm), rocks larger than 2 inches (50 mm), and debris.
B. Structural Fill: Subsoil excavated on-site.
1. Graded.
2. Free of lumps larger than 3 inches (75 mm), rocks larger than 2 inches (50 mm), and debris.
C. Granular Fill - Gravel : Pit run stone; free of shale, clay, friable material and debris.
D. Granular Fill - Pea Gravel : Natural stone; free of clay, shale, organic matter.
E. Sand: Natural river or bank sand; free of silt, clay, loam, friable or soluble materials, and organic matter.
F. Topsoil: Topsoil excavated on-site.
1. Select.
2. Free of roots, rocks larger than 1/2 inch (12 mm), subsoil, debris, large weeds and foreign matter.
3. Acidity range (pH) of 5.5 to 7.5.
4. Containing a minimum of 4 percent and a maximum of 25 percent inorganic matter.
2.02 ACCESSORIES
A. Geotextile Fabric: Non-biodegradable, woven, standard grade.

PART 3 EXECUTION
3.01 EXAMINATION
A. Identify required lines, levels, contours, and datum locations.
B. Locate, identify, and protect utilities and construction that remains and protect from damage.
3.02 TRENCHING
A. Notify Engineer of unexpected subsurface conditions and discontinue affected work in area until notified to resume work.
B. Slope banks of excavations deeper than 4 feet (1.2 meters) to angle of repose or less until shored.
C. Do not interfere with 45 degree bearing splay of foundations.
D. Cut trenches wide enough to allow inspection of installed utilities.
E. Hand trim excavations. Remove loose matter.
F. Remove large stones and other hard matter which could damage piping or impede consistent backfilling or compaction.
G. Remove lumped subsoil, boulders, and rock up to 1/3 cu yd (0.25 cu m) measured by volume.
H. Remove excavated material that is unsuitable for re-use from site.
I. Stockpile excavated material to be re-used in area designated on site .
J. Remove excess excavated material from site.
3.03 PREPARATION FOR UTILITY PLACEMENT
A. Cut out soft areas of subgrade not capable of compaction in place. Backfill with general fill.
B. Compact subgrade to density equal to or greater than requirements for subsequent fill material.
C. Until ready to backfill, maintain excavations and prevent loose soil from falling into excavation.
3.04 BACKFILLING
A. Backfill to contours and elevations indicated using unfrozen materials.
B. Fill up to finish grade or slab elevations unless otherwise indicated.
C. Employ a placement method that does not disturb or damage other work.
D. Systematically fill to allow maximum time for natural settlement. Do not fill over porous, wet, frozen or spongy subgrade surfaces.
E. Maintain optimum moisture content of fill materials to attain required compaction density.
F. Granular Fill: Place and compact materials in equal continuous layers not exceeding 8 inches (200 mm) compacted depth.
G. Soil Fill: Place and compact material in equal continuous layers not exceeding 8 inches (200 mm) compacted depth.
H. Slope grade away from building minimum 2 inches in 10 ft (50 mm in 3 m), unless noted otherwise. Make gradual grade changes. Blend slope into level areas.
I. Correct areas that are over-excavated.
J. Thrust bearing surfaces: Fill with concrete.
K. Other areas: Use general fill, flush to required elevation, compacted to minimum 95 percent of maximum dry density.
L. Compaction Density Unless Otherwise Specified or Indicated:
1. Under paving, slabs-on-grade, and similar construction: 97 percent of maximum dry density.
2. At other locations: 95 percent of maximum dry density.
M. Reshape and re-compact fills subjected to vehicular traffic.
3.05 BEDDING AND FILL AT SPECIFIC LOCATIONS
A. Use general fill unless otherwise specified or indicated.
B. Utility Piping, Conduits, and Duct Bank :
1. Bedding: Use granular fill.
2. Cover with general fill.
3. Fill up to finish grade elevation.
4. Compact in maximum 8 inch (200 mm) lifts to 95 percent of maximum dry density.
C. Over Subdrainage Piping at Foundation Perimeter and Under Slabs:
1. Drainage fill and geotextile fabric.
2. Cover drainage fill with general fill.
3. Fill up to finish grade elevation.
4. Compact to 95 percent of maximum dry density.
3.06 TOLERANCES
A. Top Surface of General Backfilling: Plus or minus 1 inch (25 mm) from required elevations.
B. Top Surface of Backfilling Under Paved Areas: Plus or minus 1 inch (25 mm) from required elevations.
3.07 FIELD QUALITY CONTROL
A. Perform compaction density testing on compacted fill in accordance with ASTM D1556, ASTM D2167, ASTM D2922, or ASTM D3017.
B. Evaluate results in relation to compaction curve determined by testing uncompacted material in accordance with ASTM D 698 ("standard Proctor"), ASTM D 1557 ("modified Proctor"), or AASHTO T 180.
C. If tests indicate work does not meet specified requirements, remove work, replace and retest.
D. Frequency of Tests: Every two feet.
3.08 CLEAN-UP
A. Leave unused materials in a neat, compact stockpile.
B. Remove unused stockpiled materials, leave area in a clean and neat condition. Grade stockpile area to prevent standing surface water.
C. Leave borrow areas in a clean and neat condition. Grade to prevent standing surface water.

END OF SECTION

## SECTION 220516 - EXPANSION FITTINGS AND LOOPS FOR PLUMBING PIPING

PART 1 GENERAL
1.01 SUBMITTALS
A. Provide the following for Architect/Engineer review:
1. Product Data:
a. Flexible Pipe Connectors: Indicate maximum temperature and pressure rating, face-to-face length, live length, hose wall thickness, hose convolutions per foot (meter) and per assembly, fundamental frequency of assembly, braid structure, and total number of wires in braid.
b. Expansion Joints: Indicate maximum temperature and pressure rating, and maximum expansion compensation.
2. Design Data: Indicate locations and calculations.
B. Provide the following to the Owner upon project closeout:
1. Manufacturer's Instructions: Indicate manufacturer's installation instructions, special procedures, and external controls.
2. Maintenance Data: Include adjustment instructions.
3. Project Record Documents: Record installed locations of flexible pipe connectors, expansion joints, anchors, and guides.

PART 2 PRODUCTS
2.01 FLEXIBLE PIPE CONNECTORS - STEEL PIPING
A. Inner Hose: Carbon steel.
B. Exterior Sleeve: Single braided, stainless steel.
C. Pressure Rating: 125 psi and 450 degrees F (862 kPa and 232 degrees C).
D. Joint: Flanged.
E. Size: Use pipe sized units.
F. Maximum offset: 3/4 inch (20 mm) on each side of installed center line.
2.02 FLEXIBLE PIPE CONNECTORS - COPPER PIPING
A. Inner Hose: Bronze.
B. Exterior Sleeve: Braided bronze.
C. Pressure Rating: 125 psi and 450 degrees F (862 kPa and 232 degrees C).
D. Joint: Flanged.
E. Size: Use pipe sized units.
F. Maximum offset: 3/4 inch (20 mm) on each side of installed center line.
G. Application: Copper piping.

PART 3 EXECUTION
3.01 INSTALLATION
A. Install in accordance with EJMA (Expansion Joint Manufacturers Association) Standards.
B. Install flexible pipe connectors on pipes connected to vibration isolated equipment. Provide line size flexible connectors.
C. Install flexible connectors at right angles to displacement. Install one end immediately adjacent to isolated equipment and anchor other end. Install in horizontal plane unless indicated otherwise.
D. Anchor pipe to building structure where indicated and as required to control detrimental movement of piping. Provide pipe guides so movement is directed along axis of pipe only. Erect piping such that strain and weight is not on connections or apparatus.
E. Provide support and equipment required to control expansion and contraction of piping. Provide loops, pipe offsets, and swing joints, or expansion joints where required.
F. Contractor may substitute grooved piping for vibration isolated equipment instead of flexible connectors. Grooved piping need not be anchored.

END OF SECTION

## SECTION 220519 - METERS AND GAUGES FOR PLUMBING PIPING

PART 1 GENERAL
1.01 SUBMITTALS
A. Provide the following for Architect/Engineer review:
1. Product Data: Provide list that indicates use, operating range, total range and location for manufactured components.
B. Provide the following to the Owner upon project closeout:
1. Project Record Documents: Record actual locations of components and instrumentation.

PART 2 PRODUCTS
2.01 POSITIVE DISPLACEMENT METERS (LIQUID)
A. AWWA C700, positive displacement disc type suitable for fluid with bronze case and cast iron frost-proof, breakaway bottom cap, hermetically sealed register, remote reading.
B. Meter: Brass body turbine meter with magnetic drive register.
1. Accuracy: 1-1/2 percent.
2.02 PRESSURE GAUGES
A. Pressure Gauges: ASME B40.100, UL 393 drawn steel case, phosphor bronze bourdon tube, rotary brass movement, brass socket, with front recalibration adjustment, black scale on white background.
1. Case: Steel with brass bourdon tube.
2. Size: 2 inch (50 mm) diameter.
3. Lens: Clear glass.
4. Mid-Scale Accuracy: Two percent.
5. Scale: Psi and kPa.
2.03 PRESSURE GAUGE TAPPINGS
A. Gauge Cock: Tee or lever handle, brass for maximum 150 psi (1034 kPa).
B. Needle Valve: Brass, 1/4 inch (6 mm) NPT for minimum 150 psi (1034 kPa).
C. Pulsation Damper: Pressure snubber, brass with 1/4 inch (6 mm) connections.
D. Syphon: Steel, Schedule 40, 1/4 inch (6 mm) angle or straight pattern.
2.04 STEM TYPE THERMOMETERS
A. Thermometers - Adjustable Angle: Red- or blue-appearing non-toxic liquid in glass; ASTM E1; lens front tube, cast aluminum case with enamel finish, cast aluminum adjustable joint with positive locking device; adjustable 360 degrees in horizontal plane, 180 degrees in vertical plane.
1. Size: 7 inch (175 mm) scale.
2. Window: Clear Lexan.
3. Stem: 3/4 inch (20 mm) NPT brass.
4. Accuracy: 2 percent, per ASTM E77.
5. Calibration: Degrees F.
2.05 TEST PLUGS
A. Test Plug: 1/4 inch (6 mm) or 1/2 inch (13 mm) brass fitting and cap for receiving 1/8 inch (3 mm) outside diameter pressure or temperature probe with Nordel core for temperatures up to 350 degrees F (176 degrees C).
B. Test Plug: 1/4 inch (6 mm) or 1/2 inch (13 mm) brass fitting and cap for receiving 1/8 inch (3 mm) outside diameter pressure or temperature probe with Viton core for temperatures up to 400 degrees F (204 degrees C).

PART 3 EXECUTION
3.01 INSTALLATION
A. Install positive displacement meters with isolating valves on inlet and outlet. Provide full line size valved bypass with globe valve for liquid service meters unless prohibited by local utility company.
B. Provide one pressure gauge per pump, installing taps before strainers and on suction and discharge of pump. Pipe to gauge.
C. Install thermometers in piping systems in sockets in short couplings. Enlarge pipes smaller than 2-1/2 inch (60 mm) for installation of thermometer sockets. Ensure sockets allow clearance from insulation.
D. Provide instruments with scale ranges selected according to service with largest appropriate scale.
E. Install gauges and thermometers in locations where they are easily read from normal operating level. Install vertical to 45 degrees off vertical.
F. Adjust gauges and thermometers to final angle, clean windows and lenses, and calibrate to zero.
G. Locate test plugs where indicated or required for measurement and balancing of systems.

END OF SECTION

## SECTION 220529 - HANGERS AND SUPPORTS FOR PLUMBING PIPING AND EQUIPMENT

PART 1 GENERAL
1.01 ADMINISTRATIVE REQUIREMENTS
A. Coordination:
1. Coordinate sizes and arrangement of supports and bases with the actual equipment and components to be installed.
2. Coordinate the work with other trades to provide additional framing and materials required for installation.
3. Coordinate compatibility of support and attachment components with mounting surfaces at the installed locations.
4. Coordinate the arrangement of supports with ductwork, piping, equipment and other potential conflicts installed under other sections or by others.
B. Sequencing:
1. Do not install products on or provide attachment to concrete surfaces until concrete has fully cured in accordance with Section regarding cast in place concrete.
1.02 SUBMITTALS
A. Submittals for Architect/Engineer review are not required.
1.03 QUALITY ASSURANCE
A. Installer Qualifications for Powder-Actuated Fasteners (when specified): Certified by fastener system manufacturer with current operator's license.
B. Product Listing Organization Qualifications: An organization recognized by OSHA as a Nationally Recognized Testing Laboratory (NRTL) and acceptable to authorities having jurisdiction.

PART 2 PRODUCTS
2.01 SUPPORT AND ATTACHMENT COMPONENTS
A. General Requirements:
1. Comply with MSS SP-58.
2. Provide all required hangers, supports, anchors, fasteners, fittings, accessories, and hardware as necessary for the complete installation of plumbing work.
3. Provide products listed, classified, and labeled as suitable for the purpose intended, where applicable.
4. Where support and attachment component types and sizes are not indicated, select in accordance with manufacturer's application criteria as required for the load to be supported. Include consideration for vibration, equipment operation, and shock loads where applicable.
5. Do not use wire, chain, perforated pipe strap, or wood for permanent supports unless specifically indicated or permitted.
6. Steel Components: Use corrosion resistant materials suitable for the environment where installed.
a. Indoor Dry Locations: Use zinc-plated steel or approved equivalent unless otherwise indicated.
b. Outdoor and Damp or Wet Indoor Locations: Use galvanized steel, stainless steel, or approved equivalent unless otherwise indicated.
c. Zinc-Plated Steel: Electroplated in accordance with ASTM B633.
d. Galvanized Steel: Hot-dip galvanized after fabrication in accordance with ASTM A123/A123M or ASTM A153/A153M.
B. Metal Channel (Strut) Framing Systems:
1. Provide factory-fabricated continuous-slot metal channel (strut) and associated fittings, accessories, and hardware required for field-assembly of supports.
2. Comply with MFMA-4.
3. Channel Material:
a. Indoor Dry Locations: Use painted steel, zinc-plated steel, or galvanized steel.
b. Outdoor and Damp or Wet Indoor Locations: Use galvanized steel or stainless steel.
4. Minimum Channel Thickness: Steel sheet, 14 gage, 0.0747 inch (1.90 mm).
5. Minimum Channel Dimensions: 1-1/2 inch (38 mm) width by 13/16 inch (21 mm) height.
C. Hanger Rods: Threaded zinc-plated steel unless otherwise indicated.
1. Minimum Size, Unless Otherwise Indicated or Required:
a. Equipment Supports: 1/2 inch (13 mm) diameter.
b. Piping up to 1 inch (27 mm) nominal: 1/4 inch (6 mm) diameter.
c. Piping larger than 1 inch (27 mm) nominal: 3/8 inch (10 mm) diameter.
d. Trapeze Support for Multiple Pipes: 3/8 inch (10 mm) diameter.
D. Thermal Insulated Pipe Supports:
1. General Construction and Requirements:
a. Insulated pipe supports to be provided at hanger, support, and guide locations on pipe requiring insulation or additional support.
b. Surface Burning Characteristics: Flame spread index/smoke developed index of 5/30, maximum, when tested in accordance with ASTM E84 or UL 723.
c. Pipe supports to be provided for nominally sized, 1/2 inch to 30 inch (12.7 mm to 762 mm) iron pipes.
d. Insulation inserts to consist of rigid polyisocyanurate (urethane) insulation surrounded by a 360 degree, PVC jacketing.
2. PVC Jacket:
a. Pipe insulation protection shields to be provided.
b. Minimum Service Temperature: Minus 40 degrees F (Minus 40 degrees C).
c. Maximum Service Temperature: 180 degrees F (82 degrees C).
d. Moisture Vapor Transmission: 0.0071 perm inch (0.0092 ng/Pa s m), when tested in accordance with ASTM E96/E96M.
e. Thickness: 60 mil (1.524 mm).
f. Connections: Brush on welding adhesive.
3. Pipe insulation protection shields to be provided at the hanger points and guide locations on pipes requiring insulation as indicated on drawings.
E. Pipe Supports:
1. Liquid Temperatures Up To 122 degrees F (50 degrees C):
a. Overhead Support: MSS SP-58 Types 1, 3 through 12.
b. Support From Below: MSS SP-58 Types 35 through 38.
2. Operating Temperatures from 122 to 446 degrees F (50 to 230 degrees C):
a. Overhead Support: MSS SP-58 Type 1 or 3 through 12, with appropriate saddle of MSS SP-58 Type 40 for insulated pipe.
b. Roller Support: MSS SP-58 Types 41 or 43 through 46, with appropriate saddle of MSS SP-58 Type 39 for insulated pipe.
c. Sliding Support: MSS SP-58 Types 35 through 38.
F. Beam Clamps: MSS SP-58 Types 19 through 23, 25 or 27 through 30 based on required load.
1. Material: ASTM A36/A36M carbon steel or ASTM A181/A181M forged steel.
2. Provide clamps with hardened steel cup-point set screws and lock-nuts for anchoring in place.
G. Strut Clamps: Two-piece pipe clamp.
H. Insulation Clamps: Two bolt-type clamps designed for installation under insulation.
I. Pipe Hangers: For a given pipe run, use hangers of the same type and material.
1. Material: Malleable iron, ASTM A47/A47M; or carbon steel, ASTM A36/A36M.
2. Provide coated or plated hangers to isolate steel hangers from dissimilar metal tube or pipe.
J. Dielectric Barriers: Provide between metallic supports and metallic piping and associated items of dissimilar type; acceptable dielectric barriers include rubber or plastic sheets or coatings attached securely to pipe or item.
2.02 Non-penetrating Rooftop Supports for Low-Slope Roofs:
A. Provide steel pedestals with thermoplastic or rubber base that rest on top of roofing membrane, not requiring any attachment to the roof structure and not penetrating the roofing assembly, with support fixtures as specified.
B. Base Sizes: As required to distribute load sufficiently to prevent indentation of roofing assembly.
C. Attachment/Support Fixtures: As recommended by manufacturer, same type as indicated for equivalent indoor hangers and supports.
D. Supports and Hangers - General: Provide with bases that rest on the roof membrane and that have:
1. Gently rounded edges to prevent damage to roof membrane.
2. 1 inch (25.4 mm) high raised edges.
3. Drainage ports to prevent ponding.
4. Carbon black additive in polycarbonate, when used, for UV stabilization.
5. Provide loose fit aluminum pipe strap on all supports, specifically designed for the support models below. Straps shall be loose fitting to prevent pipe from being displaced from the support stand but without restricting movement for expansion and contraction.
E. Fixed Height Pipe Stands: Polycarbonate resin bases.
1. 1-1/2-Inch Nominal Pipe: "U"-shaped cradle; 1-1/2 inch (38.1 mm) ID maximum pipe capacity, 1-9/10 inch (48.3 mm) OD maximum pipe capacity; 1-1/2 inch (38.1 mm) additional height per spacer, maximum 3 spacers; total load up to 80 lb (36 kg); 6 by 6 inch (152.4 by 152.4 mm) base (Model 1.5).
2. 3-Inch Nominal Pipe: Self-lubricating polycarbonate roller supported by glass filled nylon roller rod in "U"-shaped cradle; 3 inch (76.2 mm) ID maximum pipe capacity, 3-7/8 inch (84. mm) OD maximum pipe capacity; 2 inch (50.8 mm) additional pipe clearance per spacer, maximum 3 spacers; total load up to 100 lb (45 kg); 7-1/2 by 7-1/2 inch (183.5 by 183.5 mm) base (Model 3-R-2 or 3-R-4).
3. 4-Inch Nominal Pipe: Self-lubricating polycarbonate roller supported by glass filled nylon rod; 4 inch (101.6 mm) maximum pipe capacity, 5 inch (127 mm) OD maximum pipe capacity; total load up to 125 lb (57 kg); 7-1/2 by 7-1/2 inch (183.5 by 183.5 mm) base (Model 4-R).
4. 5-Inch Nominal Pipe: Self-lubricating polycarbonate roller supported by glass filled nylon rod; 5 inch (127 mm) maximum pipe capacity, 6 inch (154.2 mm) OD maximum pipe capacity; total load up to 150 lb (78 kg); 9 by 15-1/2 inch (228.6 by 384.1 mm) base (Model 5-R).
F. Adjustable Height Pipe Stands: Self-lubricating polycarbonate roller mounted on stainless steel or polycarbonate roller rod supported by two stainless steel threaded rods, with height adjustment up to 6-1/2 inches (165 mm) above roof surface.
1. 3-Inch Nominal Pipe: 3 inch (76.2 mm) ID maximum pipe capacity, 3-7/8 inch (84. mm) OD maximum pipe capacity; polycarbonate resin base; glass filled nylon threaded rod for 5 inch (127 mm) height adjustment; total load up to 100 lb (45 kg); 7-1/2 by 10 inch (183.5 by 254 mm) base (Model 3-RAH).
2. 4-Inch Nominal Pipe: 4 inch (101.6 mm) ID maximum pipe capacity, 5 inch (127 mm) OD maximum pipe capacity.
a. Base Material: Polycarbonate resin; total load up to 125 lb (57 kg); 7-1/2 by 10 inch (183.5 by 254 mm) base (Model 4-RAH).
b. Base Material: Stainless steel; total load up to 150 lb (68 kg); 12 by 16 inch (304.8 by 406.4 mm) base (Model 4-RAH SS).
c. Base Material: Hot dipped galvanized steel; total load up to 150 lb (68 kg); 12 by 16 inch (304.8 by 406.4 mm) base (Model 4-RAH HDG).
3. 5-Inch Nominal Pipe: 5 inch (127 mm) ID maximum pipe capacity, 6 inch (152.4 mm) OD maximum pipe capacity; polycarbonate resin base; total load up to 150 lb; 9 by 15-1/8 inch (228.6 by 384.1 mm) base (Model 5-RAH).
4. 6-Inch Nominal Pipe: 6 inch (152.4 mm) ID maximum pipe capacity, 7 inch (177.8 mm) OD maximum pipe capacity; total load up to 150 lb (68 kg).
a. Base Material: Stainless steel; 12 by 16 inch (304.8 by 406.4 mm) base (Model 6-RAH SS).
b. Base Material: Hot dipped galvanized steel; 12 by 16 inch (304.8 by 406.4 mm) base (Model 6-RAH HDG).
G. Strut-Type Supports: Single base with two threaded rods supporting hot dipped galvanized horizontal channel strut.
1. Size: 12 inch (304.8 mm) strut 1-5/8 by 13/16 inch (41.3 x 28.6 mm), pipe clearance variable up to 7 inch (177.8 mm) (Model 12 Base Strut).
2. Size: 16 inch (406.4 mm) strut 1-5/8 by 13/16 inch (41.3 x 28.6 mm), pipe clearance variable up to 7 inch (177.8 mm) (Model 16 Base Strut).
3. Base: Polycarbonate resin; total load up to 125 lb (56.6 kg); 7-1/2 by 10 inch (183.5 by 254 mm) or 9 by 15-1/8 inch (228.6 by 384.1 mm) base.
H. Support Pads: 15-3/4 by 19-3/4 inch (400 x 501.7 mm) square, 1/8 inch (3 mm) thick, flexible PVC with carbon black additive for UV stabilization.
I. Deck Plates: Square metal deck plate with curved up edges, to spread load and protect roof membrane.
1. Thickness: 18 gauge (1.2 mm).
2. Material: Hot dip galvanized.
3. Size: 12 x 12 inch (304.8 x 304.8 mm) square; total load up to 200 lb (90.6 kg) (Model DP-12).
4. Size: 18 x 18 inch (457.2 x 457.2 mm) square; total load up to 400 lb (181.2 kg) (Model DP-18).
5. Size: 24 x 24 inch (609.6 x 609.6 mm) square; total load up to 800 lb (361.4 kg) (Model DP-24).
J. Rollers:
1. Roller 3: 3 inch (76.2 mm) sturdy polycarbonate roller, shaft 5/8 inches (15.9 mm), end diameter 1-7/8 inches (47.6 mm). Roller surface has a 3 inch (76.2 mm) radius arch. Maximum load capacity may not exceed 150 lbs. (68 kg).
2. Roller 5: 5 inch (127 mm) sturdy polycarbonate roller, shaft 5/8 inches (15.9 mm), end diameter 2-7/16 inches (61.9 mm) Roller surface has a 5 inch (127 mm) radius arch. Maximum load capacity may not exceed 150 lbs. (68 kg).

PART 3 EXECUTION
3.01 INSTALLATION
A. Install anchors and fasteners in accordance with ICC Evaluation Services, LLC (ICC-ES) evaluation report conditions of use where applicable.
B. Provide independent support from building structure. Do not provide support from piping, ductwork, conduit, or other systems.
C. Unless specifically indicated or approved by Engineer, do not provide support from suspended ceiling support system or ceiling grid.
D. Unless specifically indicated or approved by Engineer, do not provide support from roof deck.
E. Do not penetrate or otherwise notch or cut structural members without approval of Structural Engineer.
F. Provide thermal insulated pipe supports complete with hangers and accessories. Install thermal insulated pipe supports during the installation of the piping system.
G. Equipment Support and Attachment:
1. Unless otherwise indicated, mount floor-mounted equipment on properly sized 3 inch (80 mm) high concrete pad constructed in accordance with Section regarding cast in place concrete.
H. Preset Concrete Inserts: Use manufacturer-provided closure strips to inhibit concrete seepage during concrete pour.
I. Secure fasteners according to manufacturer's recommended torque settings.
J. Determine that roof structure, roof insulation, and roof membrane are structurally adequate to support weight of pipe, duct, conduit, and supports and hangers.
K. Install supports at maximum spacing of 10 feet (3 m) unless closer spacing is required due to weight of pipe or conduit contents or greater spacing is specifically allowed by manufacturer; space and adjust to support an equal amount of weight; do not exceed manufacturer's recommended load limits.
L. Remove roofing aggregate from area 2 inches (50.8 mm) larger than support base; comply with roofing manufacturer's requirements to maintain roofing warranty.
M. Install an additional sheet of roofing material, support pad, or deck plate beneath each support base.
N. Support Pads:
1. Remove rock, aggregate, dirt and excess dust from area to be covered by pad.
2. Apply support pad on cleaned area.
3. Center bases on top of support pads.
O. Deck Plates:
1. Required for loads greater than 100 pounds per support.
2. Locate centered under bases of pipe supports and hangers.
3. Remove rock, aggregate, dirt and excess dust from an area 2 inches (50.8 mm) larger than deck plate.
4. Install with curved edges up.
P. Pipe Supports: Center beneath pipe so that pipe is located squarely over and through cradle or hanger. Set pipe in support without dropping or causing undue impact.
Q. Adjustable Supports: Adjust height of each support to achieve proper height and level before installing supported item.
1. Level rollers or struts before installing pipe.
2. Make final height adjustments to provide even distribution of load on all supports.
R. Fixed Anchor Supports: Prior to installation of roof decking, insulation and roof membrane attach support to roof structure as indicated on Drawings.
1. After installation of roof decking, insulation and membrane, install pipe or roof top mechanical supports used in connection with fixed anchor supports.
2. Install piping or mechanical units on each support.
S. Remove temporary supports.
3.02 FIELD QUALITY CONTROL
A. Inspect support and attachment components for damage and defects.
B. Repair cuts and abrasions in galvanized finishes using zinc-rich paint recommended by manufacturer. Replace components that exhibit signs of corrosion.
C. Correct deficiencies and replace damaged or defective support and attachment components.

END OF SECTION

## SECTION 220548 - VIBRATION AND SEISMIC CONTROLS FOR PLUMBING PIPING AND EQUIPMENT

PART 1 GENERAL
1.01 DEFINITIONS
A. Plumbing Component: Where referenced in this section in regards to seismic controls, applies to any portion of the plumbing system subject to seismic evaluation in accordance with applicable codes, including distributed systems (e.g., piping).
B. Seismic Restraint: Structural members or assemblies of members or manufactured elements specifically designed and applied for transmitting seismic forces between components and the seismic force-resisting system of the structure.
1.02 ADMINISTRATIVE REQUIREMENTS
A. Coordination:
1. Coordinate selection and arrangement of vibration isolation and/or seismic control components with the actual equipment to be installed.
2. Coordinate the work with other trades to provide additional framing and materials required for installation.
3. Coordinate compatibility of support and attachment components with mounting surfaces at the installed locations.
4. Notify Engineer of any conflicts with or deviations from Contract Documents. Obtain direction before proceeding with work.
B. Sequencing:
1. Do not install products on or provide attachment to concrete surfaces until concrete has fully cured in accordance with Section regarding cast in place concrete
1.03 SUBMITTALS
A. Provide the following for Architect/Engineer review:
1. Product Data: Provide manufacturer's standard catalog pages and data sheets for products, including materials, fabrication details, dimensions, and finishes.
a. Vibration Isolators: Include rated load capacities and deflections; include information on color coding or other identification methods for spring element load capacities.
B. Provide the following to the Owner upon project closeout:
1. Manufacturer's Instructions: Indicate application conditions and limitations of use stipulated by product testing agency. Include instructions for storage, handling, protection, examination, preparation, and installation of product.

PART 2 PRODUCTS
2.01 VIBRATION ISOLATORS
A. General Requirements:
1. Resilient Materials for Vibration Isolators: Oil, ozone, and oxidant resistant.
2. Spring Elements for Spring Isolators:
a. Color code or otherwise identify springs to indicate load capacity.
b. Lateral Stability: Minimum lateral stiffness to vertical stiffness ratio of 0.8.

RELEASE FOR CONSTRUCTION
AS NOTED ON PLANS REVIEW
DEVELOPMENT SERVICES
LEE'S SUMMIT, MISSOURI
03/10/2021

Bergmeyer
BOS - 51 Sleeper St. 6th Floor Boston, MA 02210 617.542.1025
LA - 800 South Figueroa St. Suite 1080 Los Angeles, CA 90017 212.337.1090
www.bergmeyer.com

CONSULTANTS:
Schnackel engineers
800-581-0963
www.schnackel.com
SE JOB#: 200383

SEAL/ SIGNATURE:
STATE OF MISSOURI
GREGORY ROY SCHNACKEL
NUMBER
E-026570
REGISTERED PROFESSIONAL ENGINEER
Date: 03/05/21
COA #: E-2009006642

| NO. | BY | DATE | DESCRIPTION |
|---|---|---|---|
| 1 | | 2021-03-09 | ADDENDUM #1 |
| | | 2021-01-11 | PERMIT/BID SET |
| | | 2020-12-21 | 75% SET |
| | | 2020-10-12 | DD SET |

SHAKE SHACK

SHAKE SHACK - LEE'S SUMMIT MO

LEE'S SUMMIT
MISSOURI
SHACK #1348

PERMIT/BID SET

PLUMBING SPECIFICATIONS

| | |
|---|---|
| DRAWN BY: | MJS |
| CHECKED BY: | GRS |
| JOB NO: | 20068.00 |

P590

SECTION 220595 - FIRESTOPPING FOR PLUMBING SYSTEMS
SECTION 220719 - PLUMBING PIPING INSULATION
SECTION 220720 - PIPING SAFETY COVERS
SECTION 221005 - PLUMBING PIPING

c. Designed to operate in the linear portion of their load versus deflection curve over deflection range of not less than 50 percent above specified deflection.
d. Designed to provide additional travel to solid of not less than 50 percent of rated deflection at rated load.
e. Selected to provide designed deflection of not less than 75 percent of specified deflection.
f. Selected to function without undue stress or overloading.
3. Seismic Snubbing Elements for Seismic Isolators:
a. Air Gap: Between 0.125 inches (3 mm) and 0.25 inches (6 mm) unless otherwise indicated.
b. Points of Contact: Cushioned with resilient material, minimum 0.25 inch (6 mm) thick; capable of being visually inspected for damage and replaced.
B. Vibration Isolators for Non-seismic Applications:
1. Resilient Material Isolator Pads:
a. Description: Single or multiple layer pads utilizing elastomeric (e.g., neoprene, rubber) or fiberglass isolator material.
b. Pad Thickness: As required for specified minimum static deflection; minimum 0.25 inch (6 mm) thickness.
c. Multiple Layer Pads: Provide bonded, galvanized sheet metal separation plate between each layer.
2. Resilient Material Isolator Mounts, Non-seismic:
a. Description: Mounting assemblies for bolting equipment to supporting structure utilizing elastomeric (e.g., neoprene, rubber) or fiberglass isolator material; fail-safe type.
3. Open (Unhoused) Spring Isolators:
a. Description: Isolator assembly consisting of single or multiple free-standing, laterally stable steel spring(s) without a housing.
b. Bottom Load Plate: Nonskid, molded, elastomeric isolator material or steel with nonskid elastomeric isolator pad with provisions for bolting to supporting structure as required.
c. Furnished with integral leveling device for positioning and securing supported equipment.
4. Spring Isolator Hangers, Non-seismic:
a. Description: Isolator assembly designed for installation in hanger rod suspension system utilizing single or multiple free-standing, laterally stable steel spring(s) in series with an elastomeric element for the lower hanger rod connection.
b. Designed to accommodate misalignment of bottom hanger rod up to 30 degrees (plus/minus 15 degrees) without short-circuiting of isolation.

2.02 BASES
A. Concrete Housekeeping Pad:
1. Construction: Concrete as specified for flooring.
2. Design: 4" high above the surrounding finished flooring and 4" greater in dimension that the equipment supported, or greater if detailed on the Drawings or when indicated.

PART 3 EXECUTION
3.01 INSTALLATION
A. Install anchors and fasteners in accordance with ICC Evaluation Services, LLC (ICC-ES) evaluation report conditions of use where applicable.
B. Secure fasteners according to manufacturer's recommended torque settings.
C. Install flexible piping connections to provide sufficient slack for vibration isolation and/or seismic relative displacements as indicated or as required.
D. Vibration Isolation Systems:
1. Vibration-Isolated Equipment Support Bases:
a. Provide specified minimum clearance beneath base.
2. Spring Isolators:
a. Position equipment at operating height; provide temporary blocking as required.
b. Lift equipment free of isolators prior to lateral repositioning to avoid damage to isolators.
c. Level equipment by adjusting isolators gradually in sequence to raise equipment uniformly such that excessive weight or stress is not placed on any single isolator.
3. Isolator Hangers:
a. Use precompressed isolator hangers where required to facilitate installation and prevent damage to equipment utility connection provisions.
b. Locate isolator hangers at top of hanger rods in accordance with manufacturer's instructions.
4. Clean debris from beneath vibration-isolated equipment that could cause short-circuiting of isolation.
5. Use elastomeric grommets for attachments where required to prevent short-circuiting of isolation.
6. Adjust isolators to be free of isolation short circuits during normal operation.
7. Do not overtighten fasteners such that resilient material isolator pads are compressed beyond manufacturer's maximum recommended deflection.
3.02 FIELD QUALITY CONTROL
A. Inspect vibration isolation and/or seismic control components for damage and defects.
B. Provide manufacturer representative or authorized technician services to assist with inspection and testing of vibration isolation systems and seismic controls. Submit a detailed copy of manufacturer recommended inspection, testing, and field report procedures.
C. Vibration Isolation Systems:
1. Verify isolator static deflections.
2. Verify required clearance beneath vibration-isolated equipment support bases.
3. Verify vibration isolation performance during normal operation; investigate sources of isolation short circuits.
D. Seismic Controls:
1. Verify snubbing element air gaps.
E. Correct deficiencies and replace damaged or defective vibration isolation and/or seismic control components.
F. Submit detailed reports indicating inspection and testing results and corrective actions taken.

**END OF SECTION**

## SECTION 220595 - FIRESTOPPING FOR PLUMBING SYSTEMS

PART 1 GENERAL
1.01 SUBMITTALS
A. Submittals for Architect/Engineer review are not required.
1.02 QUALITY ASSURANCE
A. Fire Testing: Provide firestopping assemblies of designs which provide the scheduled or specified fire ratings when tested in accordance with ASTM E 814 and ASTM E 119.
1. Listing in the current classification or certification books of UL or FM will be considered as constituting an acceptable test report.
2. Current evaluation reports published by CABO, ICBO, or BOCA will be considered as constituting an acceptable test report.
3. Submission of actual test reports is required for assemblies for which none of the above substantiation exists.
B. Installer Qualifications: Company specializing in performing the work of this section and:
1. Approved by Factory Mutual Research under FM Standard 4991, Approval of Firestop Contractors, or meeting any two of the following requirements: .
a. With minimum five years documented experience installing work of this type.
b. Where required, licensed by authority having jurisdiction.
c. Approved by firestopping manufacturer.
C. The Contractor shall examine the Drawings for the architectural work to identify all fire rated, partitions, floors and assemblies and apply the appropriate fire stopping materials and systems to maintain the fire rating of the partition, floor or assembly penetrated based on the construction conditions depicted.

PART 2 PRODUCTS
2.01 FIRESTOPPING ASSEMBLIES
A. Firestopping: Any material meeting requirements.
1. Fire Ratings: Use any system listed by UL or FM or tested in accordance with ASTM E 814 or ASTM E 119 that has F Rating equal to fire rating of penetrated assembly and minimum T Rating Equal to F Rating and that meets all other specified requirements.
2.02 MATERIALS
A. Elastomeric Silicone Firestopping: Single or multiple component silicone elastomeric compound and compatible silicone sealant; conforming to the following:
1. Durability and Longevity: Permanent.
2. Color: Manufacturer's standard color.
B. Foam Firestoppping: Single or multiple component foam compound; conforming to the following:
1. Durability and Longevity: Permanent.
2. Color: Manufacturer's standard color.
C. Fibered Compound Firestopping: Formulated compound mixed with incombustible non-asbestos fibers; conforming to the following:
1. Durability and Longevity: Permanent.
2. Color: Manufacturer's standard color.
D. Fiber Packing Material: Mineral or ceramic fiber packing insulation; conforming to the following:
1. Durability and Longevity: Permanent.
E. Firestop Devices: Mechanical device with incombustible or silicone elastomer filler and sheet stainless steel jacket, collar, and flanged stops; conforming to the following:
1. Durability and Longevity: Permanent; suitable for pedestrian traffic or vehicular traffic where necessary.
F. Intumescent Putty: Compound which expands on exposure to surface heat gain; conforming to the following:
1. Potential Expansion: Minimum 500 percent free expansion.
2. Durability and Longevity: Permanent.
3. Color: Manufacturer's standard color.
G. Firestop Pillows: Formed mineral fiber pillows; conforming to the following:
1. Durability and Longevity: Permanent.
H. Primers, Sleeves, Forms, and Accessories: Type required for tested assembly design.

PART 3 EXECUTION
3.01 EXAMINATION
A. Verify openings are ready to receive the work of this section.
3.02 PREPARATION
A. Clean substrate surfaces of dirt, dust, grease, oil, loose material, or other matter which may affect bond of fire-stopping material.
B. Remove incompatible materials which may affect bond.
C. Install backing materials to arrest liquid material leakage.
3.03 INSTALLATION
A. Install materials in manner described in fire test report and in accordance with manufacturer's instructions, completely closing openings.
B. Do not cover installed fire-stopping until inspected by authority having jurisdiction.
C. Install labeling required by code.
3.04 CLEANING AND PROTECTION
A. Clean adjacent surfaces of fire-stopping materials.
B. Protect adjacent surfaces from damage by material installation.

**END OF SECTION**

## SECTION 220719 - PLUMBING PIPING INSULATION

PART 1 GENERAL
1.01 SUBMITTALS
A. Provide the following for Architect/Engineer review:
1. Product Data: Provide product description, thermal characteristics, list of materials and thickness for each service, and locations.
B. Provide the following to the Owner upon project closeout:
1. Manufacturer's Instructions: Indicate installation procedures that ensure acceptable workmanship and installation standards will be achieved.
1.02 FIELD CONDITIONS
A. Maintain ambient conditions required by manufacturers of each product.
B. Maintain temperature before, during, and after installation for minimum of 24 hours.

PART 2 PRODUCTS
2.01 REGULATORY REQUIREMENTS
A. Surface Burning Characteristics: Flame spread index/Smoke developed index of 25/50, maximum, when tested in accordance with ASTM E84 or UL 723.
B. The Contractor may use any of the following insulating/jacketing materials, at his option, provided the selected material meets with the approval of all State, local authorities and utility company requirements. Verification of compliance of the selected insulating/jacketing material is the sole responsibility of the installing Contractor.
2.02 GLASS FIBER
A. Insulation: ASTM C547 and ASTM C795; rigid molded, noncombustible.
1. K (Ksi) Value: ASTM C177, 0.24 at 75 degrees F (0.035 at 24 degrees C).
2. Maximum Service Temperature: 850 degrees F (454 degrees C).
3. Maximum Moisture Absorption: 0.2 percent by volume.
B. Insulation: ASTM C547 and ASTM C795; semi-rigid, noncombustible, end grain adhered to jacket.
1. K (Ksi) Value: ASTM C177, 0.24 at 75 degrees F (0.035 at 24 degrees C).
2. Maximum Service Temperature: 650 degrees F (343 degrees C).
3. Maximum Moisture Absorption: 0.2 percent by volume.
C. Vapor Barrier Jacket: White Kraft paper with glass fiber yarn, bonded to aluminized film; moisture vapor transmission when tested in accordance with ASTM E96/E96M of 0.02 perm-inches (0.029 ng/Pa s m).
D. Vapor Barrier Lap Adhesive: Compatible with insulation.
E. Insulating Cement/Mastic: ASTM C195; hydraulic setting on mineral wool.
F. Fibrous Glass Fabric:
1. Cloth: Untreated; 9 oz/sq yd (305 g/sq m) weight.
2. Blanket: 1.0 lb/cu ft (16 kg/cu m) density.
3. Weave: 5 by 5.
G. Indoor Vapor Barrier Finish:
1. Vinyl emulsion type acrylic, compatible with insulation, white color.
H. Outdoor Vapor Barrier Mastic: Vinyl emulsion type acrylic or mastic, compatible with insulation, black color.
I. Outdoor Breather Mastic: Vinyl emulsion type acrylic or mastic, compatible with insulation, black color.
J. Insulating Cement: ASTM C449.
2.03 FLEXIBLE ELASTOMERIC CELLULAR INSULATION
A. Insulation: Preformed flexible elastomeric cellular rubber insulation complying with ASTM C 534 Grade 1; use molded tubular material wherever possible.
1. Minimum Service Temperature: Minus 40 degrees F (Minus 40 degrees C).
2. Maximum Service Temperature: 220 degrees F (104 degrees C).
3. Connection: Waterproof vapor barrier adhesive.
B. Elastomeric Foam Adhesive: Air dried, contact adhesive, compatible with insulation.
2.04 JACKETS
A. PVC Plastic.
1. Jacket: One piece molded type fitting covers and sheet material, off-white color.
a. Minimum Service Temperature: 0 degrees F (Minus 18 degrees C).
b. Maximum Service Temperature: 150 degrees F (66 degrees C).
c. Moisture Vapor Permeability: 0.002 perm inch (0.0029 ng/Pa s m), maximum, when tested in accordance with ASTM E96/E96M.
d. Thickness: 10 mil (0.25 mm).
e. Connections: Brush on welding adhesive.
2. Covering Adhesive Mastic: Compatible with insulation.
B. ABS Plastic:
1. Jacket: One piece molded type fitting covers and sheet material, off-white color.
a. Minimum Service Temperature: Minus 40 degrees F (Minus 40 degrees C).
b. Maximum Service Temperature: 180 degrees F (82 degrees C).
c. Moisture Vapor Permeability: 0.012 perm inch (0.018 ng/Pa s m), when tested in accordance with ASTM E96/E96M.
d. Thickness: 30 mil (0.76 mm).
e. Connections: Brush on welding adhesive.
C. Aluminum Jacket: ASTM B209 (ASTM B209M) formed aluminum sheet.
1. Thickness: 0.016 inch (0.40 mm) sheet.
2. Finish: Embossed.
3. Joining: Longitudinal slip joints and 2 inch (50 mm) laps.
4. Fittings: 0.016 inch (0.4 mm) thick die shaped fitting covers with factory attached protective liner.
5. Metal Jacket Bands: 3/8 inch (10 mm) wide; 0.015 inch (0.38 mm) thick aluminum.
6. Metal Jacket Bands: 3/8 inch (10 mm) wide; 0.010 inch (0.25 mm) thick stainless steel.
D. Stainless Steel Jacket: ASTM A666, Type 304 stainless steel.
1. Thickness: 0.010 inch (0.25 mm).
2. Finish: Smooth.
3. Metal Jacket Bands: 3/8 inch (10 mm) wide; 0.010 inch (0.25 mm) thick stainless steel.

PART 3 EXECUTION
3.01 EXAMINATION
A. Verify that piping has been tested before applying insulation materials.
B. Verify that surfaces are clean and dry, with foreign material removed.
C. Verify that the installation of all heat trace systems have been completed and tested before applying insulation materials.
3.02 INSTALLATION
A. Install in accordance with North American Insulation Manufacturers Association (NAIMA) National Insulation Standards.
B. Exposed Piping: Locate insulation and cover seams in least visible locations.
C. Insulated pipes conveying fluids below ambient temperature: Insulate entire system including fittings, valves, unions, flanges, strainers, flexible connections, pump bodies, and expansion joints.
D. Glass fiber insulated pipes conveying fluids below ambient temperature:
1. Provide vapor barrier jackets, factory-applied or field-applied. Secure with self-sealing longitudinal laps and butt strips with pressure sensitive adhesive. Secure with outward clinch expanding staples and vapor barrier mastic.
2. Insulate fittings, joints, and valves with molded insulation of like material and thickness as adjacent pipe. Finish with glass cloth and vapor barrier adhesive or PVC fitting covers.
3. Vapor barriers shall be continuous at all joints, fittings, valves, equipment and end caps. Seal all exposed ends or edges of insulation at all locations including hangers and supports with insulating cement to prevent water vapor from entering insulation material beneath the vapor barrier jacket.
E. For hot piping conveying fluids 140 degrees F (60 degrees C) or less, do not insulate flanges and unions at equipment, but bevel and seal ends of insulation.
F. For hot piping conveying fluids over 140 degrees F (60 degrees C), insulate flanges and unions at equipment.
G. Glass fiber insulated pipes conveying fluids above ambient temperature:
1. Provide standard jackets, with or without vapor barrier, factory-applied or field-applied. Secure with self-sealing longitudinal laps and butt strips with pressure sensitive adhesive. Secure with outward clinch expanding staples.
2. Insulate fittings, joints, and valves with insulation of like material and thickness as adjoining pipe. Finish with glass cloth and adhesive or PVC fitting covers.
H. Inserts and Shields:
1. Application: Piping 2 inches (50 mm) diameter or larger.
2. Shields: Galvanized steel between pipe hangers or pipe hanger rolls and inserts.
3. Insert Location: Between support shield and piping and under the finish jacket.
4. Insert Configuration: Minimum 6 inches (150 mm) long, of same thickness and contour as adjoining insulation; may be factory fabricated.
5. Insert Material: Hydrous calcium silicate insulation or other heavy density insulating material suitable for the planned temperature range.
I. Continue insulation through walls, sleeves, pipe hangers, and other pipe penetrations. Finish at supports, protrusions, and interruptions. At fire separations, fire stop penetrations to meet local code requirements.
J. Pipe Exposed in Finished Spaces (less than 10 feet (3 meters) above finished floor): Finish with Aluminum, Stainless Steel, ABS or PVC jacket and fitting covers.
K. Buried Piping: Provide factory fabricated assembly with inner all-purpose service jacket with self-sealing lap, and asphalt impregnated open mesh glass fabric, with one mil (0.025 mm) thick aluminum foil sandwiched between three layers of bituminous compound; outer surface faced with a polyester film.
L. Heat Traced Piping: Insulate fittings, joints, and valves with insulation of like material, thickness, and finish as adjoining pipe. Size large enough to enclose pipe and heat tracer. Cover with aluminum or stainless steel jacket with seams located on bottom side of horizontal piping. Do not use aluminum jackets on projects within 50 miles of a salt water body
3.03 SCHEDULES
A. Plumbing Systems:
1. Domestic Hot and Tempered Water Supply and Recirculation:
a. Glass Fiber Insulation:
1. Pipe Size Range: Within the first 8 feet of pipe from the fixture, up to 3/4 inch (19 mm) in size:
a. Thickness: 1/2 inch (12 mm).
2. All Other Pipe:
a. Thickness: 1 inch (25 mm).
b. Flexible Elastomeric Cellular Foam Insulation:
1. Pipe Size Range: Within the first 8 feet of pipe from fixture, up to 3/4 inch (19 mm) in size:
a. Thickness: 1/2 inch (12 mm).
2. All Other Pipe:
a. Thickness: 1 inch (25 mm).
2. Domestic Cold Water:
a. Glass Fiber Insulation:
1. Pipe Size Range: All Sizes.
a. Thickness: 1/2 inch (13 mm).
b. Flexible Elastomeric Cellular Foam Insulation:
1. Pipe Size Range: All Sizes.
a. Thickness: 1/2 inch (13 mm).
B. Roof Drain Piping:
1. Roof Drainage Above Grade: (Includes Roof Drain Bodies).
a. Glass Fiber Insulation:
1. Pipe Size Range: All Sizes.
a. Thickness: 1 inch (25 mm).
b. Flexible Elastomeric Cellular Foam Insulation:
1. Pipe Size Range: All Sizes.
a. Thickness: 1 inch (25 mm).
C. Cooling Systems:
1. Cold Condensate Drains:
a. Glass Fiber Insulation:
1. Pipe Size Range: All Sizes.
a. Thickness: 1/2 inch (13 mm).
b. Flexible Elastomeric Cellular Foam Insulation:
1. Pipe Size Range: All Sizes.
a. Thickness: 1/2 inch (13 mm).
D. Other Systems:
1. Piping Exposed to Freezing with Heat Tracing:
a. Glass Fiber Insulation:
1. Pipe Size Range: Up to 2 inch (50 mm):
a. Thickness: 2 1/2 inch (63 mm).
2. Pipe Size Range: 2 1/2 inch (63 mm) to 4 inch (100 mm):
a. Thickness: 3 inch (75 mm).
3. Pipe Size Range: 5 inch and larger:
a. Thickness: 3 1/2 inch (88 mm).

**END OF SECTION**

## SECTION 220720 - PIPING SAFETY COVERS

PART 1 GENERAL
1.01 SUBMITTALS
A. Provide the following for Architect/Engineer review:
1. Product Data: Manufacturer's descriptive literature for products specified in this section.

PART 2 PRODUCTS
2.01 PIPING INSULATION ACCESSORIES
A. Provide products that comply with the following:
1. Americans With Disabilities Act (ADA), Article 4.19.4.
2. ANSI/ICC A117.1, American National Standard for Accessible Buildings and Facilities.
3. Requirements of applicable building code.
B. Piping Safety Covers: Truebro Lav-Guard.
1. Characteristics: Three-piece molded assembly, minimum 1/8 inch (3 mm) wall thickness, with internal ribs to provide air space between piping and piping insulation jacket, molded to receive manufacturer's snap-clip fasteners.
2. Vinyl Material: Impact-resistant and stain-resistant molded closed-cell anti-microbial vinyl compound, UV-stable, non-fading, non yellowing; having the following performance characteristics:
a. Burning Characteristics: 0 seconds Average Time of Burning (ATB), 0 mm Area of Burning (AEB), when tested in accordance with ASTM D 635.
b. Thermal Conductivity: K-value 1.17 (2.02), when tested in accordance with ASTM C 177.
c. Indentation Hardness: 60, minimum, when tested in accordance with ASTM D 2240, using Type A durometer.
d. Trap Assembly Cover: Three-piece assembly, with removable clean-out nut enclosure.
e. Angle Stop Covers: Formed with hinged cap for access to valve without requiring cover removal.
f. Configurations: In accordance with manufacturer's product data for project piping configurations indicated on Drawings.
g. Color: China White, gloss finish; paintable.
h. Fasteners: Manufacturer's standard re-usable snap-clip fasteners; wire-tie fasteners not permitted.

PART 3 EXECUTION
3.01 EXAMINATION
A. Verify that piping configurations are correct type for piping cover component configurations specified.
3.02 PROTECTION OF INSTALLED PRODUCTS
A. Do not allow damage to installed products by subsequent construction activities; protect products until Substantial Completion. Replace any damaged products prior to occupancy.

**END OF SECTION**

## SECTION 221005 - PLUMBING PIPING

PART 1 GENERAL
1.01 QUALITY ASSURANCE
A. Valves: Manufacturer's name and pressure rating marked on valve body.
B. Welding Materials and Procedures: Comply with ASME BPVC-IX and applicable state labor regulations.
C. Welder Qualifications: Certified in accordance with ASME BPVC-IX.
D. Identify pipe with marking including size, ASTM material classification, ASTM specification, potable water certification, and pressure rating.
1.02 FIELD CONDITIONS
A. Do not install underground piping when bedding is wet or frozen.

PART 2 PRODUCTS
2.01 GENERAL REQUIREMENTS
A. Potable Water Supply Systems: Provide piping, pipe fittings, and solder and flux (if used), that comply with NSF 61 and NSF 372 for maximum lead content; label pipe and fittings.
2.02 THE CONTRACTOR MAY USE ANY OF THE FOLLOWING PIPING MATERIALS, AT HIS OPTION, PROVIDED THE SELECTED MATERIAL MEETS WITH THE APPROVAL OF ALL STATE AND LOCAL AUTHORITIES AND UTILITY COMPANY REQUIREMENTS. VERIFICATION OF COMPLIANCE OF THE SELECTED PIPING MATERIAL WITH LOCAL REQUIREMENTS IS THE SOLE RESPONSIBILITY OF THE INSTALLING CONTRACTOR. VERIFY THE USE OF PLASTIC PIPING SYSTEMS WITH THE LOCAL JURISDICTION. NON-METALLIC PIPING SYSTEMS MAY NOT BE USED IN ANY RETURN AIR PLENUM CEILING SPACES. FIRE-RATED OR NON-COMBUSTIBLE LOCATIONS. NO EXCEPTIONS.
2.03 SANITARY SEWER PIPING, BURIED WITHIN 5 FEET (1500 MM) OF BUILDING
A. Cast Iron Pipe: ASTM A74 service weight.
1. Fittings: Cast iron.
2. Joints: Hub-and-spigot, CISPI HSN compression type with ASTM C564 neoprene gaskets or lead and oakum.
3. Encasement: Provide 8 mil minimum polyethylene encasement pipe wrap on all cast iron pipe installed in corrosive soils.
B. Cast Iron Pipe: ASTM A 888 and CISPI 301, hubless.
1. Fittings: Cast iron.
2. Joints: ASTM A 74 or CISPI 310, neoprene gasket and stainless steel clamp and shield assemblies.
3. Encasement: Provide 8 mil minimum polyethylene encasement pipe wrap on all cast iron pipe installed in corrosive soils.
4. Markings: All pipe and fittings shall be marked with CISPI and NSF trademark.
C. ABS Pipe: ASTM D2661.
1. Fittings: ABS.
2. Joints: Solvent welded with ASTM D2235 cement.
D. PVC Pipe: ASTM D 2665 or ASTM F 679.
1. Fittings: PVC.
2. Joints: Solvent welded, with ASTM D2564 solvent cement or Push-on, using ASTM F477 elastomeric gaskets.
2.04 SANITARY SEWER PIPING, ABOVE GRADE
A. Cast Iron Pipe: ASTM A74, service weight.
1. Fittings: Cast iron.
2. Joint Seals: ASTM C564 neoprene gaskets, or lead and oakum.
B. Cast Iron Pipe: ASTM A 888 and CISPI 301, hubless, service weight.
1. Fittings: Cast iron.
2. Joints: ASTM A 74 or CISPI 310, neoprene gaskets and stainless steel clamp-and-shield assemblies.
3. Markings: All pipe and fittings shall be marked with CISPI and NSF trademark.
C. PVC Pipe: ASTM D2665.
1. Fittings: PVC.
2. Joints: Solvent welded, with ASTM D2564 solvent cement.
2.05 DOMESTIC WATER PIPING, BURIED WITHIN 5 FEET (1500 MM) OF BUILDING
A. Copper Pipe: ASTM B42, hard drawn.
1. Fittings: ASME B16.18, cast copper alloy or ASME B16.22 wrought copper and bronze.
2. Joints: ASTM B32, alloy Sn95 solder.
3. Joints: AWS A5.8M/A5.8, BCuP copper/silver braze.
4. Encasement: Provide 8 mil minimum polyethylene encasement pipe wrap on all copper pipe installed in corrosive soils.
B. Ductile Iron Pipe: AWWA C151/A21.51.
1. Fittings: Ductile or gray iron, standard thickness.
2. Joints: AWWA C111/A21.11, styrene butadiene rubber (SBR) or vulcanized SBR gasket with 3/4 inch (19 mm) diameter rods.
3. Encasement: Provide 8 mil minimum polyethylene encasement pipe wrap on all cast iron pipe installed in corrosive soils.
2.06 DOMESTIC WATER PIPING, ABOVE GRADE
A. Copper Tube: ASTM B88 (ASTM B88M), Type L (B), Drawn (H).
1. Fittings: ASME B16.18, cast copper alloy or ASME B16.22, wrought copper and bronze.
2. Joints: ASTM B32, alloy Sn95 solder.
3. Joints: Grooved mechanical couplings.
4. Mechanical Press Sealed Fittings: Double-pressed type, NSF 61 and NSF 372 approved or certified, utilizing EPDM, nontoxic, synthetic rubber sealing elements.
2.07 STORM WATER PIPING, BURIED WITHIN 5 FEET (1500 MM) OF BUILDING
A. Cast Iron Pipe: ASTM A74 service weight.
1. Fittings: Cast iron.
2. Joint Seals: ASTM C564 neoprene gaskets, or lead and oakum.
3. Encasement: Provide 8 mil minimum polyethylene encasement pipe wrap on all cast iron pipe installed in corrosive soils.
B. PVC Pipe: ASTM D2665, ASTM D3034, or ASTM F679.
1. Fittings: PVC.
2. Joints: Solvent welded, with ASTM D2564 solvent cement or Push-on, using ASTM F477 elastomeric gaskets.
2.08 STORM WATER PIPING, ABOVE GRADE
A. Cast Iron Pipe: ASTM A74 service weight.
1. Fittings: Cast iron.
2. Joint Seals: ASTM C564 neoprene gaskets, or lead and oakum.
B. Cast Iron Pipe: ASTM A888 and CISPI 301, hubless, service weight.
1. Fittings: Cast iron.
2. Joints: ASTM A74 or CISPI 310, Neoprene gaskets and stainless steel clamp-and-shield assemblies.
3. Markings: All pipe and fittings shall be marked with CISPI and NSF trademark.
C. PVC Pipe: ASTM D2665 or ASTM D3034.
1. Fittings: PVC.
2. Joints: Solvent welded, with ASTM D2564 solvent cement.
2.09 NATURAL GAS PIPING, ABOVE GRADE
A. Steel Pipe: ASTM A53/A53M Schedule 40 black.
1. Fittings: 3" and larger shall be ASME B16.3, malleable iron, or ASTM A 234/A 234M, wrought steel welding type. Threaded fittings may be used on piping 2 1/2" and smaller, except where noted on the drawings or required by code to be welded.
2. Joints: Threaded or welded to ASME B31.1.
B. Copper Tube: ASTM B88 (ASTM B88M), Type K (A) or L (B) annealed.
1. Fittings: ASME B16.26, cast bronze.
2. Joints: Flared.
2.10 CONDENSATE DRAINAGE PIPING AND EQUIPMENT DRAINS, ABOVE GRADE
A. Copper Tube: ASTM B306, DWV.
1. Fittings: ASME B16.29, wrought copper, or ASME B16.23, sovent.
2. Joints: ASTM B32, alloy Sn50 solder.
B. PVC Pipe: ASTM D2665.
1. Fittings: PVC.
2. Joints: Solvent welded, with ASTM D2564 solvent cement.
2.11 FLANGES, UNIONS, AND COUPLINGS
A. Unions for Pipe Sizes 3 Inches (80 mm) and Under:
1. Ferrous Pipe: Class 150 malleable iron threaded unions.
2. Copper Tube and Pipe: Class 150 bronze unions with soldered joints.
B. Flanges for Pipe Size Over 1 Inch (25 mm):
1. Ferrous Pipe: Class 150 malleable iron threaded or forged steel slip-on flanges; preformed neoprene gaskets.
2. Copper Tube and Pipe: Class 150 slip-on bronze flanges; preformed neoprene gaskets.
C. Mechanical Couplings for Grooved and Shouldered Joints: Two or more curved housing segments with continuous key to engage pipe groove, circular C-profile gasket, and bolts to secure and compress gasket.
1. Dimensions and Testing: In accordance with AWWA C606.
2. Housing Material: Provide ASTM A47/A47M malleable iron or ductile iron, galvanized.
3. Gasket Material: EPDM suitable for operating temperature range from minus 30 degrees F (minus 34 degrees C) to 230 degrees F (110 degrees C).
4. Bolts and Nuts: Hot dipped galvanized or zinc-electroplated steel.
5. When pipe is field grooved, provide coupling manufacturer's grooving tools.
D. Dielectric Connections: Union with galvanized or plated steel threaded end, copper solder end, water impervious isolation barrier.
2.12 PIPE HANGERS AND SUPPORTS
A. Provide hangers and supports that comply with MSS SP-58.
B. Plumbing Piping - Drain, Waste, and Vent:
1. Conform to MSS SP-58.
2. Hangers for Pipe Sizes 1/2 Inch (15 mm) to 1-1/2 Inches (40 mm): Malleable iron, adjustable swivel, split ring.
3. Hangers for Pipe Sizes 2 Inches (50 mm) and Over: Carbon steel, adjustable, clevis.
4. Multiple or Trapeze Hangers: Steel channels with welded spacers and hanger rods.
5. Wall Support for Pipe Sizes to 3 Inches (80 mm): Cast iron hook.
6. Wall Support for Pipe Sizes 4 Inches (100 mm) and Over: Welded steel bracket and wrought steel clamp.
7. Vertical Support: Steel riser clamp.
8. Floor Support: Cast iron adjustable pipe saddle, lock nut, nipple, floor flange, and concrete pier or steel support.
9. Copper Pipe Support: Carbon steel ring, adjustable, copper plated.
C. Plumbing Piping - Water and Gas:
1. Conform to MSS SP-58.
2. Hangers for Pipe Sizes 1/2 Inch (15 mm) to 1-1/2 Inches (40 mm): Malleable iron, adjustable swivel, split ring.
3. Hangers for Cold Pipe Sizes 2 Inches (50 mm) and Over: Carbon steel, adjustable, clevis.
4. Hangers for Hot Pipe Sizes 2 Inches (50 mm) to 4 Inches (100 mm): Carbon steel, adjustable, clevis.
5. Hangers for Hot Pipe Sizes 6 Inches (150 mm) and Over: Adjustable steel yoke, cast iron pipe roll, double hanger.
6. Multiple or Trapeze Hangers: Steel channels with welded supports or spacers and hanger rods.
7. Multiple or Trapeze Hangers for Hot Pipe Sizes 6 Inches (150 mm) and Over: Steel channels with welded supports or spacers and hanger rods, cast iron roll.
8. Wall Support for Pipe Sizes to 3 Inches (80 mm): Cast iron hook.
9. Wall Support for Pipe Sizes 4 Inches (100 mm) and Over: Welded steel bracket and wrought steel clamp.
10. Wall Support for Hot Pipe Sizes 6 Inches (150 mm) and Over: Welded steel bracket and wrought steel clamp with adjustable steel yoke and cast iron pipe roll.
11. Vertical Support: Steel riser clamp.
12. Floor Support for Cold Pipe: Cast iron adjustable pipe saddle, lock nut, nipple, floor flange, and concrete pier or steel support.
13. Floor Support for Hot Pipe Sizes to 4 Inches (100 mm): Cast iron adjustable pipe saddle, locknut, nipple, floor flange, and concrete pier or steel support.
14. Floor Support for Hot Pipe Sizes 6 Inches (150 mm) and Over: Adjustable cast iron pipe roll and stand, steel screws, and concrete pier or steel support.
15. Copper Pipe Support: Carbon steel ring, adjustable, copper plated.
D. Hanger Fasteners: Attach hangers to structure using appropriate fasteners.
E. Utilize galvanized steel pipe hangers and supports in all wet, damp and corrosive environments, including all exterior locations
2.13 MANUFACTURED SLEEVE-SEAL SYSTEMS
A. Modular/Mechanical Seal:
1. Synthetic rubber interlocking links continuously fill annular space between pipe and wall/casing opening.
2. Provide watertight seal between pipe and wall/casing opening.
3. Elastomer element size and material in accordance with manufacturer's recommendations.
4. Glass reinforced plastic pressure end plates.
2.14 GATE VALVES (EXTERIOR UTILITY SERVICE ONLY)
A. Up To and Including 3 Inches (80 mm):
1. MSS SP-80, Class 125, bronze body, bronze trim, rising stem, handwheel, inside screw, solid wedge disc, solder or threaded ends. Provide extension to grade and valve box per local jurisdiction and utility company standards. Post-indicator type were used for fire protection service or when indicated on the Drawings.
B. 2 Inches (50 mm) and Larger:
1. MSS SP-70, Class 125, iron body, bronze trim, outside screw and yoke, handwheel, solid wedge disc, flanged ends. Provide extension to grade and valve box per local jurisdiction and utility company standards. Post-indicator type were used for fire protection service or when indicated on the Drawings.
2.15 BALL VALVES
A. Construction, 4 Inches (100 mm) and Smaller: MSS SP-110, Class 150, 400 psi (2760 kPa) CWP, bronze or ductile iron body, 304 stainless steel or chrome plated brass ball, regular port, teflon seats and stuffing box ring, blow-out proof stem, lever handle with balancing stops, threaded or grooved ends with union.
2.16 BUTTERFLY VALVES
A. Construction 1-1/2 Inches (40 mm) and Larger: MSS SP-67, 200 psi (1380 kPa) CWP, cast or ductile iron body, nickel-plated ductile iron disc, resilient replaceable EPDM seat, wafer ends, extended neck, 10 position lever handle.
B. Provide gear operators for valves 8 inches (150 mm) and larger, and chain-wheel operators for valves mounted over 8 feet (2400 mm) above floor.
2.17 FLOW CONTROLS
A. Construction: Class 125, Brass or bronze body with union on inlet and outlet, temperature and pressure test plug on inlet and outlet, blowdown/backflush drain.
B. Calibration: Control flow within 5 percent of selected rating, over operating pressure range of 10 times minimum pressure required for control, maximum minimum pressure 3.5 psi (24 kPa).
2.18 WATER PRESSURE REDUCING VALVES
A. Up to 2 Inches (50 mm):
1. ASSE 1003, bronze body, stainless steel, and thermoplastic internal parts, fabric reinforced diaphragm, strainer, threaded single union ends.
B. Over 2 Inches (50 mm):
1. ASSE 1003, cast iron body with interior lining complying with AWWA C550, bronze fitted, elastomeric diaphragm and seat disc, flanged.
2.19 RELIEF VALVES
A. Pressure:
1. ANSI Z21.22, AGA certified, bronze body, teflon seat, steel stem and springs, automatic, direct pressure actuated.
B. Temperature and Pressure:
1. ANSI Z21.22, AGA certified, bronze body, teflon seat, stainless steel stem and springs, automatic, direct pressure actuated, temperature relief maximum 210 degrees F (98.9 degrees C), capacity ASME BPVC-IV certified and labelled.
2.20 SEISMIC GAS SHUT-OFF VALVE:
A. Size 4 inches (100 mm) and Under:
1. ASCE 25, ANSI Z21.70, aluminum design, manual reset.
2.21 STRAINERS
A. Size 2 Inches (50 mm) and Under:
1. Threaded brass body for 175 psi (1200 kPa) CWP, Y pattern with 1/32 inch (0.8 mm) stainless steel perforated screen.
2. Class 150, threaded bronze body 300 psi (2070 kPa) CWP, Y pattern with 1/32 inch (0.8 mm) stainless steel perforated screen.
B. Size 1-1/2 inch (40 mm) to 4 inches (100 mm):
1. Class 125, flanged iron body, Y pattern with 1/16 inch (1.6 mm) stainless steel perforated screen.
C. Size 5 inch (125 mm) and Larger:
1. Class 125, flanged iron body, basket pattern with 1/8 inch (3.2 mm) stainless steel perforated screen.
2.22 ACCESS DOORS
A. Stealth access panel units as manufactured by Wind-lock, or equal, shall be prefabricated with high-density gypsum, reinforced with continuous random filament glass fiber mat and structural reinforcing as required. Access panel shall be designed to be flush, with no exposed hinges, catches, etc. and ready for any finishes, paint or texturing to match the surrounding drywall surfaces. Access panels shall be taped and mudded into the drywall system to achieve a uniform, integral appearance with a minimum of visibility. Door panels shall be lift out type, unless in-ceiling clearances require a hinged application.
1. Glass Content: 5 to 6 percent by weight
2. Density: 103 to 112 pcf
3. Shell Thickness: 1/8 to 3/16 inch (3 to 5 mm) nominal
4. Flammability: Flame Spread Index of 0
5. Smoke Development Index of 0
6. Flexural Strength: 300-4000 PSI
7. Compressive Strength: 7600 PSI
8. Hardness (Barcol) 50
9. Impact Resistance 8.0 ft.-lb./in.2
B. Fire rated access doors as manufactured by Acudor Products Inc, or equal, shall be prefabricated, UL listed and fire rated as required to meet the fire resistance ratings indicated on the Architectural drawings or as required to meet the fire resistance ratings in the field. Provide stainless steel access doors in all wet, damp or corrosive environments.
1. Door / Door Frame: Steel or Stainless Steel, 16 gage door, 16 gage frame, minimum.
2. Mounting Frame: Steel or Stainless Steel, flush to frame with reinforced edges, flange to be 1" wide.
3. Hinge: Concealed
4. Standard Latch: Universal self-latching bolt, operated by either a knurled knob or flush key.
5. Finish: Steel: 5 stage iron phosphate preparation with prime coat of white alkyd baked-on enamel. Stainless Steel: #4 satin polish.

PART 3 EXECUTION
3.01 EXAMINATION
A. Verify that excavations are to required grade, dry, and not over-excavated.
3.02 PREPARATION
A. Ream pipe and tube ends. Remove burrs. Bevel plain end ferrous pipe.
B. Remove scale and dirt, on inside and outside, before assembly.
C. Prepare piping connections to equipment with flanges or unions.
3.03 INSTALLATION
A. Provide non-conducting dielectric connections wherever jointing dissimilar metals.
B. Route piping in orderly manner and maintain gradient. Route parallel and perpendicular to walls.
C. Install piping to maintain headroom, conserve space, and not interfere with use of space.
D. Group piping whenever practical at common elevations.
E. Install piping to allow for expansion and contraction without stressing pipe, joints, or connected equipment. Refer to Section 22 0516.
F. Provide clearance in hangers and from structure and other equipment for installation of insulation and access to valves and fittings.
G. Locate all valves and control elements in accessible areas wherever possible to avoid access doors. Provide access where valves and fittings are not exposed or located in accessible areas. Provide ceiling access doors for access to all valves and control elements located above inaccessible ceiling areas. Provide minimum 12 x 12 inch (300 x 300 mm) size for hand access, 18 x 18 inch (450 x 450 mm) size for shoulder access, and as indicated. Provide 4 x 4 inch (100 x 100 mm) for shut off valves only. Provide rated access doors where installed in fire rated construction. Review locations prior to fabrication.
H. Establish elevations of buried piping outside the building to ensure not less than the maximum local frost depth cover. Install tracer wire on all plastic piping outside the building.
I. Install vent piping penetrating roofed areas to maintain integrity of roof assembly.
J. All sanitary vent system terminations shall be a minimum of ten feet from any fresh air intake and twenty-five feet on medical facilities (hospitals, clinics, etc.)
K. Where pipe support members are welded to structural building framing, scrape, brush clean, and apply one coat of zinc-rich primer to welding.
L. Provide support for utility meters in accordance with requirements of utility companies.
M. Prepare exposed, unfinished pipe, fittings, supports, and accessories ready for finish painting.
N. Paint all exterior above grade piping with a minimum of two coats of paint, color to match roof or wall surface to which it is attached.
1. Copper pipe Apply vinyl etch primer immediately following cleaning. EXT 5.5A Alkyd: Vinyl Wash Primer MPI #80, Alkyd MPI #8, 9 or 94, Semi-gloss.
2. Steel pipe: Apply alkyd metal primer immediately following cleaning. EXT 5.1D Alkyd: Alkyd Metal Primer MPI #79, Alkyd MPI # 94, semi-gloss.
3. Plastic pipe: Apply alkyd bonding primer immediately following cleaning. EXT 6.8B Alkyd: Bonding Primer MPI #17 or 69, Alkyd MPI #8, 9 or 94.
O. Excavate, bedding and backfill shall be in accordance with applicable sections of this Specification.
P. Pipe vents from gas pressure reducing valves to outdoors and terminate in weather proof hood, unless of the ventless design and approved by the local jurisdiction and the local utility company regulations.
Q. Provide dirt legs as detailed on the Drawings on all gas piping connections to appliances.
R. The use of sanitary tee fittings will not be permitted. Utilize wye fittings in lieu of tee fittings for all intersections of drainage piping.
S. Sleeve pipes passing through partitions, walls, and floors.
T. Provide sleeves when penetrating footings, masonry walls and floors. Seal and fire stop pipe and sleeve penetrations to achieve fire resistance equivalent to fire separation required. All penetrations through footings and floors shall be sealed water tight.
U. If piping is located within 1.5 inches (38 mm) of the nearest edge of studs, joists, rafters or similar members, provide minimum 0.062 inch (1.6 mm) thick steel protective shield plates extending 2" above and below the pipe being protected. Shield plates may be omitted on cast iron piping only.
V. Inserts:
1. Provide inserts for placement in concrete formwork.
2. Provide inserts for suspending hangers from reinforced concrete slabs and sides of reinforced concrete beams.
3. Provide hooked rod to concrete reinforcement section for inserts carrying pipe over 4 inches (100 mm).
4. Where concrete slabs form finished ceiling, locate inserts flush with slab surface.
5. Where inserts are omitted, drill through concrete slab from below and provide through-bolt with recessed square steel plate and nut above slab.
W. Pipe Hangers and Supports:
1. Install in accordance with ASME B31.9.
2. Support horizontal piping as indicated.
3. Install hangers to provide minimum 1/2 inch (15 mm) space between finished covering and adjacent work.
4. Place hangers within 12 inches (300 mm) of each horizontal elbow.
5. Use hangers with 1-1/2 inch (40 mm) minimum vertical adjustment. Design hangers for pipe movement without disengagement of supported pipe.
6. Support vertical piping at every other floor. Support riser piping independently of connected horizontal piping.
7. Where several pipes can be installed in parallel and at same elevation, provide multiple or trapeze hangers.
8. Provide copper plated hangers and supports for copper piping.
9. Prime coat exposed steel hangers and supports. Hangers and supports located in crawl spaces, pipe shafts, and suspended ceiling spaces are not considered exposed.
10. Provide hangers adjacent to motor-driven equipment with vibration isolation; refer to Section 22 0548.
11. Support cast iron drainage piping at every joint.
X. Manufactured Sleeve-Seal Systems:
1. Install manufactured sleeve-seal systems in sleeves located in grade slabs and exterior concrete walls at piping entrances into building.

RELEASE FOR CONSTRUCTION
AS NOTED ON PLANS REVIEW
DEVELOPMENT SERVICES
LEE'S SUMMIT, MISSOURI
03/10/2021

Bergmeyer
BOS
51 Sleeper St.
6th Floor
Boston, MA 02210
617.542.1025
LA
800 South Figueroa St.
Suite 1080
Los Angeles, CA 90017
212.337.1090
www.bergmeyer.com

CONSULTANTS:
Schnackel engineers
800-581-0963
www.schnackel.com
SE JOB#: 200383

SEAL/ SIGNATURE:
STATE OF MISSOURI
GREGORY ROY SCHNACKEL
NUMBER
E-026570
REGISTERED PROFESSIONAL ENGINEER
Date: 03/05/21
COA #: E-2009006642

| NO. | BY | DATE | DESCRIPTION |
|---|---|---|---|
| 1 | | 2021-03-09 | ADDENDUM #1 |
| | | 2021-01-11 | PERMIT/BID SET |
| | | 2020-12-21 | 75% SET |
| | | 2020-10-12 | DD SET |

SHAKE SHACK

SHAKE SHACK - LEE'S SUMMIT MO

LEE'S SUMMIT
MISSOURI
SHACK #1348

PERMIT/BID SET

PLUMBING SPECIFICATIONS

DRAWN BY: MJS
CHECKED BY: GRS
JOB NO: 20068.00

P591

SECTION 221006 - PLUMBING PIPING SPECIALTIES
SECTION 224000 - PLUMBING FIXTURES
SECTION 223000 - PLUMBING EQUIPMENT

2. Provide sealing elements of the size, quantity, and type required for the piping and sleeve inner diameter or penetration diameter.
3. Locate piping in center of sleeve or penetration.
4. Install field assembled sleeve-seal system components in annular space between sleeve and piping.
5. Tighten bolting for a watertight seal.
6. Install in accordance with manufacturer's recommendations.

Y. When installing more than one piping system material, ensure system components are compatible and joined to ensure the integrity of the system. Provide necessary joining fittings. Ensure flanges, union, and couplings for servicing are consistently provided.

3.04 APPLICATION
- A. Use grooved mechanical couplings and fasteners only in accessible locations.
- B. Install unions downstream of valves and at equipment or apparatus connections.
- C. Install brass male adapters each side of valves in copper piped system. Solder adapters to pipe.
- D. Install ball or butterfly valves for shut-off and to isolate equipment, part of systems, or vertical risers.
- E. Install globe, ball, or butterfly valves for throttling, bypass, or manual flow control services.
- F. Provide lug end butterfly valves adjacent to equipment when provided to isolate equipment.
- G. Provide spring-loaded check valves on discharge of water pumps.
- H. Provide plug or gas service rated ball valves in natural gas systems for shut-off service.
- I. Provide automatic flow controls valves in water recirculating systems where indicated. Utilize 0.5 gpm flow unless otherwise indicated on the drawings.

3.05 TOLERANCES
- A. Interior Drainage Piping: Establish invert elevations within 1/2 inch (10 mm) vertically of location indicated and slope to drain at minimum of 1/4 inch per foot (1:50) slope, unless noted otherwise on the Drawings.
- B. Water Piping: Slope at minimum of 1/32 inch per foot (1:400) and arrange to drain at low points.

3.06 DISINFECTION OF DOMESTIC WATER PIPING SYSTEM
- A. Prior to starting work, verify system is complete, flushed, and clean.
- B. Ensure acidity (pH) of water to be treated is between 7.4 and 7.6 by adding alkali (caustic soda or soda ash) or acid (hydrochloric).
- C. Inject disinfectant, free chlorine in liquid, powder, tablet, or gas form throughout system to obtain 50 to 80 mg/L residual.
- D. Bleed water from outlets to ensure distribution and test for disinfectant residual at minimum 15 percent of outlets.
- E. Maintain disinfectant in system for 24 hours.
- F. If final disinfectant residual tests less than 25 mg/L, repeat treatment.
- G. Flush disinfectant from system until residual equal to that of incoming water or 1.0 mg/L.
- H. Take samples no sooner than 24 hours after flushing, from 10 percent of outlets and from water entry, and analyze in accordance with AWWA C651.

3.07 SERVICE CONNECTIONS
- A. Provide new water service complete with approved reduced pressure backflow preventer and water meter with by-pass valves (where permitted by local authorities), pressure reducing valve (where pressure exceeds 80 psi)
  1. Provide sleeve in wall for service main and support at wall with reinforced concrete bridge. Caulk enlarged sleeve and make watertight with pliable material. Anchor service main inside to concrete wall.
  2. Provide 18 gage (1.20 mm) galvanized sheet metal sleeve around service main to 2 inches (50 mm) above floor and 3 feet (900 mm) minimum below grade. Size for minimum of 2 inches (50 mm) of loose batt insulation stuffing.
- B. Provide new gas services complete with gas meter and regulators. Gas service distribution piping shall have initial minimum pressure as indicated on the drawings. Provide appropriately sized regulators on each line serving gas appliances, sized in accordance with the manufacturers recommendations based on the sizing parameters indicated on the Drawings. The entire gas service and piping installation shall comply with the local jurisdiction and the regulations of the serving utility.

3.08 SCHEDULES
- A. Pipe Hanger Spacing:
  1. Metal Piping:
     - a. Pipe Size: 1/2 inches (15 mm) to 1-1/4 inches (32 mm):
       1. Maximum Hanger Spacing: 6.5 ft (2 m).
       2. Hanger Rod Diameter: 3/8 inches (9 mm).
     - b. Pipe Size: 1-1/2 inches (40 mm) to 2 inches (50 mm):
       1. Maximum Hanger Spacing: 10 ft (3 m).
       2. Hanger Rod Diameter: 3/8 inch (9 mm).
     - c. Pipe Size: 2-1/2 inches (65 mm) to 3 inches (75 mm):
       1. Maximum Hanger Spacing: 10 ft (3 m).
       2. Hanger Rod Diameter: 1/2 inch (13 mm).
     - d. Pipe Size: 4 inches (100 mm) to 6 inches (150 mm):
       1. Maximum Hanger Spacing: 10 ft (3 m).
       2. Hanger Rod Diameter: 5/8 inch (15 mm).
  2. Plastic Piping:
     - a. Pipe size: 1/2 inches (15 mm) to 6 inches (150 mm):
       1. Maximum Hanger Spacing: 6 ft (1.8 m).
       2. Hanger Rod Diameter: 3/8 inch (9 mm).

**END OF SECTION**

## SECTION 221006 - PLUMBING PIPING SPECIALTIES

PART 1 GENERAL

1.01 SUBMITTALS
- A. Provide the following for Architect/Engineer review:
  1. Product Data: Provide component sizes, rough-in requirements, service sizes, and finishes.
- B. Provide the following to the Owner upon project closeout:
  1. Manufacturer's Instructions: Indicate Manufacturer's Installation Instructions: Indicate assembly and support requirements.
  2. Operation Data: Indicate frequency of treatment required for interceptors.
  3. Maintenance Data: Include installation instructions, spare parts lists, exploded assembly views.
  4. Project Record Documents: Record actual locations of equipment, cleanouts, backflow preventers, water hammer arrestors.

PART 2 PRODUCTS

2.01 GENERAL REQUIREMENTS
- A. Specialties in Potable Water Supply Systems: Provide products that comply with NSF 61 and NSF 372 for maximum lead content.
- B. Fixtures and accessories shall be as scheduled on the Drawings.

2.02 WATER HAMMER ARRESTORS
- A. Stainless steel or copper construction, bellows type sized in accordance with PDI-WH 201, precharged suitable for operation in temperature range 34 to 250 degrees F (1 to 120 degrees C) and maximum 150 psi (1000 kPa) working pressure.

2.03 SUMPS
- A. Glass fiber reinforced or precast concrete with required openings and drainage fittings.
- B. Cover: 3/8 inch (9 mm) thick checkered steel plate with gasket seal frames and anchor bolts.

2.04 MIXING VALVES
- A. Thermostatic Mixing Valves:
  1. Valve: Chrome plated cast brass body, stainless steel or copper alloy bellows, integral temperature adjustment.
  2. Accessories:
     - a. Check valve on inlets.
     - b. Strainer stop checks on inlets.
- B. Pressure Balanced Mixing Valves:
  1. Valve: Chrome plated cast brass body, stainless steel cylinder, integral temperature adjustment.
  2. Accessories:
     - a. Strainer stop checks on inlets.

2.05 RELIEF VALVES
- A. Bronze body, teflon seat, stainless steel stem and springs, automatic, direct pressure actuated, capacities ASME certified and labelled.

PART 3 EXECUTION

3.01 INSTALLATION
- A. Provide cleanouts as shown on construction documents and per local code requirements.
- B. Extend cleanouts to finished floor or wall surface. Lubricate threaded cleanout plugs with mixture of graphite and linseed oil. Ensure clearance at cleanout for rodding of drainage system.
- C. Encase exterior cleanouts in concrete flush with grade.
- D. Install floor cleanouts at elevation to accommodate finished floor for a completely flush installation.
- E. Install approved potable water protection devices on plumbing lines where contamination of domestic water may occur; on boiler feed water lines, janitor rooms, fire sprinkler systems, premise isolation, irrigation systems, flush valves, drink mixing stations, interior and exterior hose bibbs and all other locations required by Codes.
- F. Pipe relief from backflow preventer to nearest drain.
- G. Install water hammer arrestors complete with accessible isolation valve on hot and cold water supply piping to lavatory sinks, washing machine outlets, or quick-closing valves.

**END OF SECTION**

## SECTION 223000 - PLUMBING EQUIPMENT

PART 1 GENERAL

1.01 ADMINISTRATIVE REQUIREMENTS
- A. Sequencing: Ensure that utility connections are achieved in an orderly and expeditious manner.

1.02 SUBMITTALS
- A. Provide the following for Architect/Engineer review:
  1. Product Data:
     - a. Provide dimension drawings of water heaters indicating components and connections to other equipment and piping.
     - b. Indicate pump type, capacity, power requirements.
     - c. Provide certified pump curves showing pump performance characteristics with pump and system operating point plotted. Include NPSH curve when applicable.
     - d. Provide electrical characteristics and connection requirements.
- B. Provide the following to the Owner upon project closeout:
  1. Project Record Documents: Record actual locations of components.
  2. Operation and Maintenance Data: Include operation, maintenance, and inspection data, replacement part numbers and availability, and service depot location and telephone number.

1.03 QUALITY ASSURANCE
- A. Certifications:
  1. Water Heaters: NSF approved.
  2. Gas Water Heaters: Certified by CSA International to ANSI Z21.10.1, as applicable, in addition to requirements specified elsewhere.
  3. Electric Water Heaters: UL listed and labeled to UL 174.
  4. Products Requiring Electrical Connection: Listed and classified by Underwriters Laboratories Inc., as suitable for the purpose specified and indicated.
- B. Identification: Provide equipment with manufacturer's name, model number, and rating/capacity identified by permanently attached label.
- C. Performance: Ensure pumps operate at specified system fluid temperatures without vapor binding and cavitation, are non-overloading in parallel or individual operation, operate within 25 percent of midpoint of published maximum efficiency curve.

1.04 WARRANTY
- A. Provide five year manufacturer warranty for domestic water heaters, water storage tanks, and packaged water heating systems.
- B. Provide one year manufacturer warranty for pumps.

PART 2 PRODUCTS

2.01 COMMERCIAL GAS FIRED INSTANTANEOUS WATER HEATERS
- A. Type: Automatic, natural gas-fired, fully modulating, tankless.
- B. Performance:
  1. Maximum working pressure: 150 psig (1000 kPa).
- C. Accessories: Brass or bronze water connections and waterways, integral flow regulator, and ASME rated temperature and pressure relief valve and heat trap fittings for hot and cold water connections.
  1. Water Connections: Brass.
  2. Coil: Copper.
  3. Burners: Stainless steel.
- D. Certification: As automatic fully modulating tankless water heater and for operation at 180 degrees F (82 degrees C) for operation on combustible floors. All water heaters over 199 MBH input shall be ASME rated and bear an ASME label. All water heaters over 399 MBH shall be located in separate rooms and shall include CSD-1 controls.
- E. Controls: Automatic water thermostat with temperature range adjustable from 110 to 180 degrees F (43 to 82 degrees C), automatic reset high temperature limiting thermostat factory at 195 degrees F (90 degrees C), gas pressure regulator, 100 percent safety shut-off pilot and thermocouple, flue baffle and draft hood.

2.02 WATER SOFTENERS
- A. Performance:
  1. Electrical Characteristics:
     - a. As indicated on the Drawings.
- B. Softener Tank:
  1. Glassfiber reinforced plastic tank.
- C. Brine Tank:
  1. Glassfiber reinforced plastic tank.
- D. Microprocessor Based Control: Brass control valve cycled to regenerate after adjustable metered quantity of water flow.

2.03 IN-LINE CIRCULATOR PUMPS
- A. Casing: Bronze, rated for 125 psig (860 kPa) working pressure, with stainless steel rotor assembly.
- B. Impeller: Bronze.
- C. Shaft: Alloy steel with integral thrust collar and two oil lubricated bronze sleeve bearings.
- D. Seal: Carbon rotating against a stationary ceramic seat.
- E. Drive: Flexible coupling.
- F. Performance:
  1. Electrical Characteristics:
     - a. As indicated on the Drawings.
     - b. Verify that proper power supply is available prior to ordering equipment. Verify proper voltage, phase and current rating of power supply and inform Engineer of any deviations prior to order, connection of equipment or start-up. Responsibility for verification of proper power supply voltage and any product returns or damage resulting from incorrect connections shall rest with this Contractor.

2.04 ELECTRICAL WORK
- A. Provide electrical motor driven equipment specified complete with motors, motor starters, controls, and wiring.
- B. Electrical characteristics to be as specified or indicated.
- C. Furnish motor starters complete with thermal overload protection and other appurtenances necessary for the motor control specified.
- D. Supply manual or automatic control and protective or signal devices required for the operation specified, and any control wiring required for controls and devices not shown.

PART 3 EXECUTION

3.01 INSTALLATION
- A. Provide concrete equipment bases for all floor mounted plumbing equipment.
- B. Coordinate with plumbing piping and related fuel piping, gas venting, and electrical work as applicable to achieve operating system.
- C. Pumps:
  1. Ensure shaft length allows sump pumps to be located minimum 24 inches (600 mm) below lowest invert into sump pit and minimum 6 inches (150 mm) clearance from bottom of sump pit.
  2. Provide air cock and drain connection on horizontal pump casings.
  3. Provide line sized isolating valve and strainer on suction and line sized soft seated check valve and balancing valve on discharge.
  4. Decrease from line size with long radius reducing elbows or reducers. Support piping adjacent to pump such that no weight is carried on pump casings. Provide supports under elbows on pump suction and discharge line sizes 4 inches (100 mm) and over.
  5. Ensure pumps operate at specified system fluid temperatures without vapor binding and cavitation, are non-overloading in parallel or individual operation, and operate within 25 percent of midpoint of published maximum efficiency curve.
  6. Provide electrical interlocking from cooling condensate pump safety switch to associated HVAC unit(s) furnished under other Sections.
  7. Verify that proper power supply is available prior to ordering equipment. Verify proper voltage, phase and current rating of power supply and inform Engineer of any deviations prior to order, connection of equipment or start-up. Responsibility for verification of proper power supply voltage and any product returns or damage resulting from incorrect connections shall rest with this Contractor.
  8. Refer to vibration isolation requirements specified in Vibration Isolation section of this Specification.

**END OF SECTION**

## SECTION 224000 - PLUMBING FIXTURES

PART 1 GENERAL

1.01 SUBMITTALS
- A. Provide the following for Architect/Engineer review:
  1. Product Data: Provide catalog illustrations of fixtures, sizes, rough-in dimensions, utility sizes, trim, and finishes.
- B. Provide the following to the Owner upon project closeout:
  1. Manufacturer's Instructions: Indicate installation methods and procedures.
  2. Maintenance Data: Include fixture trim exploded view and replacement parts lists.

PART 2 PRODUCTS

2.01 GENERAL REQUIREMENTS
- A. Potable Water Systems: Provide plumbing fittings and faucets that comply with NSF 61 and NSF 372 for maximum lead content; label pipe and fittings.

2.02 FIXTURES AND ACCESSORIES SHALL BE AS SCHEDULED ON THE DRAWINGS.

PART 3 EXECUTION

3.01 EXAMINATION
- A. Verify that walls and floor finishes are prepared and ready for installation of fixtures.
- B. Verify that electric power is available and of the correct characteristics.
- C. Confirm that millwork is constructed with adequate provision for the installation of counter top lavatories and sinks.

3.02 PREPARATION
- A. Rough-in fixture piping connections in accordance with minimum sizes indicated in fixture rough-in schedule for particular fixtures.

3.03 INSTALLATION
- A. Install each fixture with trap, easily removable for servicing and cleaning.
- B. Install each fixture using brass angle ball stop valves for hot and cold water connections as applicable. Non-metallic valves or non-ball valve type stops will not be accepted.
- C. Provide chrome plated rigid or flexible supplies to fixtures with specified stops, reducers, and escutcheons.
- D. Install components level and plumb.
- E. Install and secure fixtures in place with wall carriers, wall supports and bolts.
- F. Solidly attach floor mounted water closets to floor with lag screws. Lead flashing is not intended hold fixture in place.
- G. Install each fixture with trap, easily removable for servicing and cleaning.
- H. Install fixtures and fittings in accordance with the manufacturer's instructions and in accordance with the ICC (IPC).
- I. When fixtures require both hot water and cold water supplies, provide the hot water supply to the left of the cold water supply.
- J. Install off-the-floor supports to conform to ASME A112.6.1M.
- K. For floor drain/sink installations above slab on grade, provide adjustable collar with seepage slots, invertible non-puncturing membrane clamp, and 24" x 24" waterproof membrane.

3.04 INTERFACE WITH WORK OF OTHER SECTIONS
- A. Review millwork shop drawings. Confirm location and size of fixtures and openings before rough-in and installation.

3.05 ADJUSTING
- A. Adjust stops or valves for intended water flow rate to fixtures without splashing, noise, or overflow.

3.06 CLEANING
- A. Clean plumbing fixtures and equipment.

3.07 PROTECTION
- A. Protect installed products from damage due to subsequent construction operations.
- B. Do not permit use of fixtures by construction personnel.
- C. Repair or replace damaged products before date of Substantial Completion.

3.08 FIELD INSPECTION
- A. Continue inspection during installation and testing.
- B. A final inspection of the equipment shall be performed prior to installation to determine conformity to the type, class, grade, size, capacity, and other characteristics specified or indicated on the drawings.
- C. Correct or replace all rejected equipment prior to installation.
- D. Engineer or Architect reserves the right to inspect any and all equipment and fixtures prior to final occupancy and reject any fixtures which have been damaged, marred or otherwise defaced.

**END OF SECTION**

RELEASE FOR CONSTRUCTION
AS NOTED ON PLANS REVIEW
DEVELOPMENT SERVICES
LEE'S SUMMIT, MISSOURI
03/10/2021

Bergmeyer
BOS
51 Sleeper St.
6th Floor
Boston, MA 02210
617.542.1025
LA
800 South Figueroa St.
Suite 1080
Los Angeles, CA 90017
212.337.1090
www.bergmeyer.com

CONSULTANTS:
Schnackel engineers
800-581-0963
www.schnackel.com
SE JOB#: 200383

SEAL/ SIGNATURE:
STATE OF MISSOURI
GREGORY ROY SCHNACKEL
NUMBER
E-026570
REGISTERED PROFESSIONAL ENGINEER
Date: 03/05/21
COA #: E-2009006642

| NO. | BY | DATE | DESCRIPTION |
|---|---|---|---|
| 1 | | 2021-03-09 | ADDENDUM #1 |
| | | 2021-01-11 | PERMIT/BID SET |
| | | 2020-12-21 | 75% SET |
| | | 2020-10-12 | DD SET |

SHAKE SHACK

SHAKE SHACK - LEE'S SUMMIT MO

LEE'S SUMMIT
MISSOURI
SHACK #1348

PERMIT/BID SET

PLUMBING SPECIFICATION

| | |
|---|---|
| DRAWN BY: | MJS |
| CHECKED BY: | GRS |
| JOB NO: | 20068.00 |

P592

## GAS FIRED INSTANTANEOUS WATER HEATERS

| MARK | LOCATION | INPUT MBH | GPM @ 80 DEGREE RISE | STORAGE CAP | MANUFACTURER | REMARKS |
|---|---|---|---|---|---|---|
| HWH-1 | MECH. ROOM | 199.9 | 3.9 | 0.65 GAL | NORITZ | NCC199CDV |

## EXPANSION TANKS

| MARK | LOCATION | SERVES | MAXIMUM ACCEPTANCE (GALLONS) | WORKING PRESS (PSI) | SIZE (APPROX) | MANUFACTURER | REMARKS |
|---|---|---|---|---|---|---|---|
| ET-1 | BOH | DOM. HW | 10.3 | 150 | 15"ø x 19" | AMTROL | MODEL ST-25V |

*NOTE: CONTRACTOR SHALL ADJUST PRE-CHARGE OF EXPANSION TANK TO EQUAL INCOMING WATER PRESSURE PRIOR TO INSTALLATION.

## PUMPS

| MARK | LOCATION | SERVICE | GPM | HEAD (FT.) | MOTOR DATA | | | | RPM | TYPE | MFR. | REMARKS |
|---|---|---|---|---|---|---|---|---|---|---|---|---|
| | | | | | HP | VOLTS | PH | CYC. | | | | |
| P-1 | BOH | DOM. HW | 2 | 15.4 | 1/10 | 115 | 1 | 60 | 2926 | INLINE | B & G | ECOCIRC XL 20-35 |

## WATER SOFTENERS

| MARK | LOCATION | EXCHANGE CAPACITY, KGR @ SALT DOSAGE (LBS.) | | SERVICE FLOW RATES | | | | RESIN QUANTITY (CU. FT.) | SOFTENER TANK SIZE (IN.) | BRINE TANK SIZE (IN.) | REMARKS |
|---|---|---|---|---|---|---|---|---|---|---|---|
| | | | | PEAK | | CONTINUOUS | | | | | |
| | | MINIMUM | MAXIMUM | FLOW (GPM) | PRESS. DROP (PSI) | FLOW (GPM) | PRESS. DROP (PSI) | | | | |
| WS-1 | BOH | X | 42.6 | 31 | 30 | 21 | 15 | X | X | X | ECOLAB EST-CP150 |

## VALVE SCHEDULE

| TYPE | MANUFACTURER | THREADED/FLANGED PIPING | | SOLDERED/BRAZED PIPING |
|---|---|---|---|---|
| | | 2" AND SMALLER | 2-1/2" AND LARGER | 3" AND SMALLER |
| GATE | JENKINS | 47-C | 651-C | 1242-C |
| | MILWAUKEE | 148 | 2885 | 115 |
| | STOCKHAM | B-100 | G-623 | B-108 |
| BALL | JENKINS | 901A | --- | 902A |
| | MILWAUKEE | BA100 | --- | BA150 |
| | STOCKHAM | S-216-BR1-R-T | --- | S-216-BR1-R-S |
| CHECK | JENKINS | 4092 | 624-C | 4093 |
| | MILWAUKEE | 509 | F2974 | 1509 |
| | STOCKHAM | B-319 | G-931 | B-309 |
| AUTOMATIC BALANCING | HAYS | N.A. | N.A. | 2517LF - 0.5 GPM |

NOTES:
1. VALVES MATERIAL (BODIES, DISC, GASKETS, LININGS, PACKINGS, ETC.) SHALL BE APPROVED FOR THE SERVICE IN WHICH THEY ARE INSTALLED.
2. VALVES SHALL BE LINE SIZE UNLESS OTHERWISE INDICATED.
3. VALVES SHALL BE EQUIPPED WITH ACCESSORIES AS REQUIRED.

## PLUMBING FIXTURE SCHEDULE

| Mark | | DESCRIPTION | FINAL CONNECTIONS HW | CW | V | W | MANUFACTURER MODEL NUMBER |
|---|---|---|---|---|---|---|---|
| K-60A | GENERIC FIXTURE: COMMERCIAL KITCHEN, 3-COMP SINK | 1/2" DOMESTIC HOT AND COLD WATER CONNECTIONS FOR 3-COMPARTMENT SINK, PROVIDE BACKFLOW PREVENTION IN ACCORDANCE WITH LOCAL REQUIREMENTS IN AN ACCESSIBLE LOCATION (WHERE APPLICABLE), PROVIDE CHEMICAL SANITATION CONNECTION IN ACCORDANCE WITH LOCAL REQUIREMENTS (WHERE APPLICABLE), 140 DEG. F. HOT SUPPLY, SINGLE FAUCET ROUGH-IN, COORDINATE THE LOCATION AND SIZE OF ALL PLUMBING CONNECTIONS WITH KITCHEN CONNECTION PLANS, MANUFACTURER RECOMMENDATIONS, AND LOCAL REQUIREMENTS PRIOR TO ROUGH-IN. MAKE ANY ADJUSTMENTS NECESSARY TO PROVIDE A FULLY FUNCTIONING FIXTURE | 1/2" | 1/2" | - | - | |
| K-60B | GENERIC FIXTURE: COMMERCIAL KITCHEN, 3-COMP SINK | 1/2" DOMESTIC HOT AND COLD WATER CONNECTIONS FOR 3-COMPARTMENT SINK, PROVIDE BACKFLOW PREVENTION IN ACCORDANCE WITH LOCAL REQUIREMENTS IN AN ACCESSIBLE LOCATION (WHERE APPLICABLE), PROVIDE CHEMICAL SANITATION CONNECTION IN ACCORDANCE WITH LOCAL REQUIREMENTS (WHERE APPLICABLE), 140 DEG. F. HOT SUPPLY, SINGLE FAUCET ROUGH-IN, COORDINATE THE LOCATION AND SIZE OF ALL PLUMBING CONNECTIONS WITH KITCHEN CONNECTION PLANS, MANUFACTURER RECOMMENDATIONS, AND LOCAL REQUIREMENTS PRIOR TO ROUGH-IN. MAKE ANY ADJUSTMENTS NECESSARY TO PROVIDE A FULLY FUNCTIONING FIXTURE, | 1/2" | 1/2" | - | - | |
| K-63 | GENERIC FIXTURE: COMMERCIAL KITCHEN, COM DISHWASHER W/CHEMICAL SANITATION | 1/2" HOT WATER CONNECTION FOR COMMERCIAL DISHWASHING MACHINE WITH CHEMICAL SANITATION, PROVIDE BACKFLOW PREVENTION IN ACCORDANCE WITH LOCAL REQUIREMENTS IN AN ACCESSIBLE LOCATION, 140 DEG. F. HOT SUPPLY, COORDINATE THE LOCATION AND SIZE OF ALL PLUMBING CONNECTIONS WITH KITCHEN CONNECTION PLANS, MANUFACTURER RECOMMENDATIONS, AND LOCAL REQUIREMENTS PRIOR TO ROUGH-IN. MAKE ANY ADJUSTMENTS NECESSARY TO PROVIDE A FULLY FUNCTIONING FIXTURE | 1/2" | - | - | - | |
| K-70A | GENERIC FIXTURE: COMMERCIAL KITCHEN, PREP SINK | 1/2" DOMESTIC HOT AND COLD WATER CONNECTIONS FOR PREP SINK, 140 DEG. F. HOT SUPPLY, SINGLE FAUCET ROUGH-IN, COORDINATE THE LOCATION AND SIZE OF ALL PLUMBING CONNECTIONS WITH KITCHEN CONNECTION PLANS, MANUFACTURER RECOMMENDATIONS, AND LOCAL REQUIREMENTS PRIOR TO ROUGH-IN. MAKE ANY ADJUSTMENTS NECESSARY TO PROVIDE A FULLY FUNCTIONING FIXTURE, (1) GREASE/WASTE CONNECTION(S) | 1/2" | 1/2" | - | - | |
| K-160 | CUSTARD MACHINE | 1/2" DOMESTIC COLD WATER CONNECTION FOR CUSTARD MACHINE PROVIDE BACKFLOW PREVENTION IN ACCORDANCE WITH LOCAL REQUIREMENTS IN AN ACCESSIBLE LOCATION | - | 1/2" | - | - | |
| K-171 | GENERIC FIXTURE: COMMERCIAL KITCHEN, DIPPER WELL | 1/2" DOMESTIC COLD WATER CONNECTION FOR DIPPER WELL, PROVIDE BACKFLOW PREVENTION IN ACCORDANCE WITH LOCAL REQUIREMENTS IN AN ACCESSIBLE LOCATION, COORDINATE THE LOCATION AND SIZE OF ALL PLUMBING CONNECTIONS WITH KITCHEN CONNECTION PLANS, MANUFACTURER RECOMMENDATIONS, AND LOCAL REQUIREMENTS PRIOR TO ROUGH-IN. MAKE ANY ADJUSTMENTS NECESSARY TO PROVIDE A FULLY FUNCTIONING FIXTURE, (1) 1 1/2" DRAIN GREASE/WASTE CONNECTION(S) | 1/2" | 1/2" | 1 1/4" | 1 1/2" | |
| K-177 | GENERIC FIXTURE: COMMERCIAL KITCHEN, PREP SINK | 1/2" DOMESTIC HOT AND COLD WATER CONNECTIONS FOR PREP SINK, 140 DEG. F. HOT SUPPLY, SINGLE FAUCET ROUGH-IN, COORDINATE THE LOCATION AND SIZE OF ALL PLUMBING CONNECTIONS WITH KITCHEN CONNECTION PLANS, MANUFACTURER RECOMMENDATIONS, AND LOCAL REQUIREMENTS PRIOR TO ROUGH-IN. MAKE ANY ADJUSTMENTS NECESSARY TO PROVIDE A FULLY FUNCTIONING FIXTURE, (1) GREASE/WASTE CONNECTION(S) | 1/2" | 1/2" | - | - | |
| K-177A | FILTERED WATER FILL | 1/2" FILTERED WATER CONNECTION FOR FILTERED WATER FILL | - | 1/2" | - | - | |
| K-188 | GENERIC FIXTURE: COMMERCIAL KITCHEN, COMM DISHWASHER W/BOOSTER HEATER | 1/2" HOT WATER CONNECTION FOR COMMERCIAL DISHWASHING MACHINE WITH BOOSTER HEATER, PROVIDE BACKFLOW PREVENTION IN ACCORDANCE WITH LOCAL REQUIREMENTS IN AN ACCESSIBLE LOCATION, 140 DEG. F. HOT SUPPLY, COORDINATE THE LOCATION AND SIZE OF ALL PLUMBING CONNECTIONS WITH KITCHEN CONNECTION PLANS, MANUFACTURER RECOMMENDATIONS, AND LOCAL REQUIREMENTS PRIOR TO ROUGH-IN. MAKE ANY ADJUSTMENTS NECESSARY TO PROVIDE A FULLY FUNCTIONING FIXTURE | 1/2" | - | - | - | |
| K-204 | GENERIC FIXTURE: COMMERCIAL KITCHEN, TEA BREWER | 1/2" FILTERED WATER CONNECTION FOR TEA BREWER, PROVIDE DUAL CHECK VALVE FOR CARBONATED BEVERAGE MACHINES (WATTS SD-2 OR EQUAL), PROVIDE BACKFLOW PREVENTION IN ACCORDANCE WITH LOCAL REQUIREMENTS IN AN ACCESSIBLE LOCATION, COORDINATE THE LOCATION AND SIZE OF ALL PLUMBING CONNECTIONS WITH KITCHEN CONNECTION PLANS, MANUFACTURER RECOMMENDATIONS, AND LOCAL REQUIREMENTS PRIOR TO ROUGH-IN. MAKE ANY ADJUSTMENTS NECESSARY TO PROVIDE A FULLY FUNCTIONING FIXTURE | - | 1/2" | - | - | |
| K-224 | DRAFT BEER SYTEM POWER RACK | 1" SOFT WATER CONNECTION FOR WATER CHILLER PROVIDE BACKFLOW PREVENTION IN ACCORDANCE WITH LOCAL REQUIREMENTS IN AN ACCESSIBLE LOCATION | - | 1" | - | - | |
| 3"FD-1 | FLOOR DRAIN | STANDARD STRAINER, COATED CAST IRON, TWO-PIECE BODY, DOUBLE DRAINAGE FLANGE, ADJUSTABLE EXTENSION AS REQUIRED BY APPLICATION, ADJUSTABLE COLLAR WITH SEEPAGE SLOTS, INVERTIBLE NON-PUNCTURING MEMBRANE CLAMP, FLASHING CLAMP WITH 24"X24" 4 LB. LEAD FLASHING FOR FLOOR DRAINS INSTALLED ABOVE SLAB ON GRADE, BOTTOM OUTLET, OUTLET CONNECTION METHOD SHALL BE COMPATIBLE WITH PIPING MATERIALS IN ACCORDANCE WITH THE SPECIFICATIONS, POLISHED NICKEL BRONZE FINISH, 5" DIAMETER ROUND STRAINER, BACKWATER VALVE, OPTIONAL 4" DIAMETER FUNNEL, LIFTING RING, SECURED SECONDARY STRAINER SEDIMENT BUCKET, 1/2" TRAP PRIMER CONNECTION, VANDAL-PROOF FASTENERS, WINTER CLOSURE PLUG, UNDERDECK CLAMP, VANDAL-PROOF SECURED TOP, CLAMPING COLLAR, FREE SET GRATE, INTEGRAL GRATE, SEDIMENT BUCKET, SOLID COVER, SOLID HINGED COVER, VANDAL-PROOF SCREWS INTEGRAL BALL AND FLOAT BRONZE BACKWATER VALVE, BOTTOM DOME STRAINER, SECONDARY STRAINER ACID RESISTING COATING ON BODY, SECONDARY STRAINER, 1/2" TRAP PRIMER CONNECTION | - | - | 1 1/2" | 3" | JR SMITH: 2010-NB ZURN: Z415B |
| 3"FS-1 | FLOOR SINK | 8" DIA" X 6" DEEP FLOOR SINK, COATED CAST IRON BODY, WHITE ACID-RESISTING PORCELAIN ENAMEL INTERIOR COATING, ANTI-SPLASH DOME, ADJUSTABLE EXTENSION AS REQUIRED BY APPLICATION, ADJUSTABLE COLLAR WITH SEEPAGE SLOTS, INVERTIBLE NON-PUNCTURING MEMBRANE CLAMP, FLASHING CLAMP WITH 24"X24" 4 LB. LEAD FLASHING FOR FLOOR SINKS INSTALLED ABOVE SLAB ON GRADE, OUTLET CONNECTION METHOD SHALL BE COMPATIBLE WITH PIPING MATERIALS IN ACCORDANCE WITH THE SPECIFICATIONS, NICKEL BRONZE 3/4 GRATE, ROUND | - | - | 1 1/2" | 3" | WADE: 9010-16 |
| 4"FS-2 | FLOOR SINK | 12" X 12" X 7 3/4" DEEP FLOOR SINK, COATED CAST IRON BODY, WHITE ACID-RESISTING PORCELAIN ENAMEL INTERIOR COATING, ABS ANTI-SPLASH DOME, WHITE STRAINER, OUTLET CONNECTION METHOD SHALL BE COMPATIBLE WITH PIPING MATERIALS IN ACCORDANCE WITH THE SPECIFICATIONS, NICKEL BRONZE 3/4 GRATE, SQUARE | - | - | 2" | 4" | ZURN: FD2376-T |
| 4"TD-1 | TRENCH DRAIN | 10 FOOT LONG POLYESTER FIBERGLASS CHANNEL, 6" WIDE X 4" THROAT, ADJUST LENGTH AS REQUIRED TO MATCH FIELD REQUIREMENTS (SEE PLANS FOR LENGTH), MODULAR CHANNEL SECTIONS, FRP FIBERGLASS BODY, HEAVY-DUTY FRAME WITH ANCHOR STUDS, INTERLOCKING ENDS, RADIUSED BOTTOM, 0.75% BUILT-IN SLOPE, BLACK ACID RESISTANT COATED DUCTILE IRON GRATE - CLASS C, NO-HUB SIDE OUTLET, END CAPS (WHERE REQUIRED) | - | - | 2" | 4" | ZURN: Z806-BC |
| FCO-1 | CLEANOUT - FLOOR | ACID RESISTING COATED CAST IRON BODY, ADJUSTABLE, GAS AND WATER TIGHT ABS TAPERED THREADED INTERNAL CAST IRON PLUG, VANDAL-PROOF FASTENERS, OUTLET CONNECTION METHOD SHALL BE COMPATIBLE WITH PIPING MATERIALS IN ACCORDANCE WITH THE SPECIFICATIONS, MEDIUM DUTY, ROUND SCORIATED SECURED POLISHED BRONZE FRAME AND COVER WITH ANCHOR FLANGE, WITH "CO" IN COVER, INSTALLED FLUSH WITH FINISHED FLOOR. PROVIDE CARPET MARKERS WHERE INSTALLED BELOW CARPET | - | - | - | SEE PLAN | ZURN: ZB1400-VP |
| WCO-1 | WALL CLEANOUT | ACID RESISTING COATED CAST IRON CLEANOUT TEE, COUNTERSUNK BRONZE PLUG, ROUND STAINLESS STEEL SECURED ACCESS COVER, STANDARD FASTENERS | - | - | - | 2" | J.R. SMITH: 4710 WADE: 8480R ZURN: Z1446 |
| TP-1 | TRAP PRIMER | PRESSURE ACTIVATED TRAP PRIMER, BRASS CONSTRUCTION, PISTON OPERATED, ADJUSTMENT FOR VARIABLE PRESSURES, INSTALL TRAP PRIMER A MINIMUM OF 12" ABOVE THE TRAP BEING SERVED, PROVIDE AIR GAP FITTING WITH 1/2" MALE NPT INLET FITTING AND 1/2" FEMALE OUTLET FITTING, TWO TRAP APPLICATION | - | 1/2" | - | - | PRECISION PRODUCTS: - P2-500 |
| | TRAP PRIMER DISTRIBUTION UNIT | COPPER BODY DISTRIBUTION UNIT, 4 - 3/8" FPT BRASS DISCHARGE FITTINGS, 1/2" MALE NPT COMPOSITE INLET, PROVIDE PLUGS AS REQUIRED BY APPLICATION | | | | | PRECISION PRODUCTS: - DU-4 |
| 3"RD-1 | ROOF DRAIN | PRIMARY STORM SYSTEM, 15" DIAMETER STRAINER, COATED CAST IRON BODY, BOTTOM OUTLET, OUTLET CONNECTION METHOD SHALL BE COMPATIBLE WITH PIPING MATERIALS AND IN ACCORDANCE WITH THE SPECIFICATIONS, CAST IRON STRAINER, GENERAL PURPOSE ROOF DRAIN | - | - | - | - | JR SMITH: 1010-CID ZURN: ZC100 |
| 3"ORD-1 | ROOF DRAIN | SECONDARY STORM SYSTEM, 15" DIAMETER STRAINER, COATED CAST IRON BODY, BOTTOM OUTLET, OUTLET CONNECTION METHOD SHALL BE COMPATIBLE WITH PIPING MATERIALS AND IN ACCORDANCE WITH THE SPECIFICATIONS, CAST IRON STRAINER, GENERAL PURPOSE ROOF DRAIN, 2" INTERNAL WATER DAM, UNDERDECK CLAMP | - | - | - | - | JR SMITH: 1080-CID ZURN: ZC100-W2 |
| 3"RD-2 | ROOF DRAIN | PRIMARY STORM SYSTEM, 6" DIAMETER STRAINER, COATED CAST IRON BODY, BOTTOM OUTLET, OUTLET CONNECTION METHOD SHALL BE COMPATIBLE WITH PIPING MATERIALS AND IN ACCORDANCE WITH THE SPECIFICATIONS, CAST IRON STRAINER, GENERAL PURPOSE ROOF DRAIN | - | - | - | - | JR SMITH: 1620T |
| DSN-1 | DOWNSPOUT NOZZLES | CAST PLAIN BRONZE DECORATIVE NOZZLE AND FLANGE, CONNECTION AS REQUIRED BY APPLICATION, ROUGH-IN HEIGHT 18" ABOVE GRADE OR SLABDOWNSPOUT NOZZLE | - | - | - | - | J.R. SMITH: 1770 WADE: 3940 ZURN: ZARB199 |

## PLUMBING FIXTURE SCHEDULE

| Mark | | DESCRIPTION | FINAL CONNECTIONS HW | CW | V | W | MANUFACTURER MODEL NUMBER |
|---|---|---|---|---|---|---|---|
| WC-1 | WATER CLOSETS | FLUSH VALVE OPERATION, VITREOUS CHINA, FULLY GLAZED TRAPWAY, 1.28 GALLONS PER FLUSH, WALL MOUNTED, BACK OUTLET, 1 1/2" TOP INLET SPUD, 25 PSI MINIMUM WORKING PRESSURE, COLOR: WHITE | - | 1" | 1 1/2" | 3" | KOHLER: KINGSTON K-4325 |
| | WATER CLOSET FLUSHING SYSTEM | QUIET, EXPOSED, HIGH EFFICIENCY FLUSH VALVE, INFRARED PROXIMITY SENSOR, BOX MOUNT TRANSFORMER, 120V / 24V, 60 HZ, VANDAL RESISTANT CHROME PLATED CAST BRASS VALVE BODY, MANUAL OVER RIDE BUTTON, REVERSIBLE COVER, INTEGRAL VACUUM BREAKER, ADJUSTABLE TAILPIECE, SPUD COUPLING, FLANGE FOR TOP SPUD CONNECTION, VANDAL RESISTANT CONTROL STOP WITH INTERNAL SIPHON-GUARD PROTECTION | | | | | SLOAN: ECOS 115-1.28-HW |
| | WATER CLOSET SEAT | COMMERCIAL DUTY, EXTRA HEAVY WEIGHT, INJECTION MOLDED SOLID PLASTIC, LARGE MOLDED BUMPERS, STAINLESS STEEL POSTS, SELF-SUSTAINING, CONCEALED STAINLESS STEEL CHECK HINGE HOLDING SEAT IN ANY RAISED POSITION UP TO 11 DEG. BEYOND VERTICAL, OPEN FRONT, LESS COVER, COLOR: WHITE | | | | | KOHLER: K-4731-CA |
| | WATER CLOSET CARRIER | ADJUSTABLE HEIGHT, HORIZONTAL SIPHON JET WATER CLOSET, HUB & SPIGOT CONNECTIONS, COATED CAST IRON, RIGHT OR LEFT HAND MAIN FITTING, 2" VENT CONNECTION, ADJUSTABLE GASKETED FACE PLATE, UNIVERSAL FLOOR MOUNTED FOOT SUPPORTS, CORROSION RESISTANT ADJUSTABLE ABS COUPLING WITH INTEGRAL TEST CAP, FIXTURE BOLTS, TRIM, STUD PROTECTORS, REAR ANCHOR TIE DOWN, BONDED GASKET, ABOVE FLOOR SANITARY DISCHARGE, STANDARD WEIGHT CLASS, STANDARD WALL SYSTEM, STANDARD WALL SYSTEM | | | | | JOSAM: 12674-44-35-LFH OR 12684-44-35-LFH (CHECK PLAN FOR ORIENTATION) |
| | MOUNTING HEIGHT | MOUNTING HEIGHT 17" | | | | | |
| WC-2 | WATER CLOSETS | FLUSH VALVE OPERATION, VITREOUS CHINA, FULLY GLAZED TRAPWAY, 1.28 GALLONS PER FLUSH, WALL MOUNTED, BACK OUTLET, 1 1/2" TOP INLET SPUD, 25 PSI MINIMUM WORKING PRESSURE, COLOR: WHITE | - | 1" | 1 1/2" | 3" | KOHLER: KINGSTON K-4325 |
| | WATER CLOSET FLUSHING SYSTEM | QUIET, EXPOSED, HIGH EFFICIENCY FLUSH VALVE, INFRARED PROXIMITY SENSOR, BOX MOUNT TRANSFORMER, 120V / 24V, 60 HZ, VANDAL RESISTANT CHROME PLATED CAST BRASS VALVE BODY, MANUAL OVER RIDE BUTTON, REVERSIBLE COVER, INTEGRAL VACUUM BREAKER, ADJUSTABLE TAILPIECE, SPUD COUPLING, FLANGE FOR TOP SPUD CONNECTION, VANDAL RESISTANT CONTROL STOP WITH INTERNAL SIPHON-GUARD PROTECTION | | | | | SLOAN: ECOS 115-1.28-HW |
| | WATER CLOSET SEAT | COMMERCIAL DUTY, EXTRA HEAVY WEIGHT, INJECTION MOLDED SOLID PLASTIC, LARGE MOLDED BUMPERS, STAINLESS STEEL POSTS, SELF-SUSTAINING, CONCEALED STAINLESS STEEL CHECK HINGE HOLDING SEAT IN ANY RAISED POSITION UP TO 11 DEG. BEYOND VERTICAL, OPEN FRONT, LESS COVER, COLOR: WHITE | | | | | KOHLER: K-4731-CA |
| | WATER CLOSET CARRIER | ADJUSTABLE HEIGHT, HORIZONTAL SIPHON JET WATER CLOSET, HUB & SPIGOT CONNECTIONS, COATED CAST IRON, RIGHT OR LEFT HAND MAIN FITTING, 2" VENT CONNECTION, ADJUSTABLE GASKETED FACE PLATE, UNIVERSAL FLOOR MOUNTED FOOT SUPPORTS, CORROSION RESISTANT ADJUSTABLE ABS COUPLING WITH INTEGRAL TEST CAP, FIXTURE BOLTS, TRIM, STUD PROTECTORS, REAR ANCHOR TIE DOWN, BONDED GASKET, ABOVE FLOOR SANITARY DISCHARGE, STANDARD WEIGHT CLASS, STANDARD WALL SYSTEM, STANDARD WALL SYSTEM | | | | | JOSAM: 12674-44-35-LFH OR 12684-44-35-LFH (CHECK PLAN FOR ORIENTATION) |
| | MOUNTING HEIGHT | MOUNTING HEIGHT 15" | | | | | |
| LAV-1 | LAVATORIES | RECTANGULAR UNDERMOUNT SINK, VITREOUS CHINA, FRONT OVERFLOW, RECTANGULAR SHAPED LAVATORY, SIZE: VITREOUS CHINA, FRONT OVERFLOW, LESS SOAP DISPENSER HOLE, ADA COMPLANT, COLOR: WHITE | 3/8" | 3/8" | 1 1/4" | 1 1/4" | KOHLER: K-2214 |
| | LAVATORY FAUCET | 0.5 GPM AERATOR, 3/8" THREADED MALE INLET SHANKS, BOX MOUNT TRANSFORMER, 120V / 24V, 60 HZ, GROUP FAUCETS WHERE APPLICABLE95 | | | | | SLOAN: EAF-100-HLT-ISM-CP-0.5CPM-AER-IR-IO-FCT |
| | LAVATORY SUPPLIES | CHROME PLATED ANGLE STOPS WITH LOOSE KEY HANDLE, CHROME PLATED FLEXIBLE BRASS RISER, INSULATE ALL EXPOSED WATER LINES AND VALVES | | | | | |
| | LAVATORY WASTE | GRID DRAIN STRAINER, 1 1/4" OFFSET TAILPIECE, 1 1/4" 17 GAUGE CHROME PLATED ADJUSTABLE BRASS P-TRAP WITH CLEANOUT PLUG, 1 1/4" CHROME PLATED BRASS WASTE TO WALL | | | | | |
| | LAVATORY PROTECTIVE PIPE COVERS | ADA COMPLIANT, CHINA WHITE, ANTI-BACTERIA/FUNGAL, MOLDED VINYL, P-TRAP COVER, TWO ANGLE VALVE AND SUPPLY COVERS, 5" OFFSET TAILPIECE WHEEL CHAIR STRAINER COVER | | | | | TRUEBRO: 103 E-Z PLUMBEREX: X4444 |
| | LAVATORY MIXING VALVE | BELOW DECK THERMOSTATIC MIXING VALVE | | | | | POWERS: E480 SLOAN: MIX-135-A |
| UR-1 | URINAL | WALL MOUNTED, ELONGATED RIM, ADA COMPLIANT, WASHOUT BOWL, 2" OUTLET | - | 3/4" | 1 1/4" | 2" | KOHLER: K-4991-ET |
| | URINAL CARRIER | SPECIFICATION "FIXTURE CARRIER, WALL URINAL SUPPORT SYSTEM, TOP AND BOTTOM SUPPORT PLATES, COATED RECTANGULAR STEEL UPRIGHTS, WELDED FEET, ADJUSTABLE SUPPORT PLATES, MOUNTING FASTENERS, " | | | | | SLOAN: 186-1-YK |
| | MOUNTING HEIGHT | 17" MAXIMUM A.F.F (ADA) | | | | | |
| RH-1 | ROOF HYDRANT | BRONZE NON-FREEZE GROUND HYDRANT, "T" HANDLE KEY, CAST IRON INLET AND HOSE CONNECTION, 1/8" DRAIN HOLE, NICKEL BRONZE BOX | - | 1/2" | - | - | J.R. SMITH: 5909 ZURN: Z1300 |
| | MOUNTING | MOUNTED FLUSH ABOVE FINISHED ROOF, PROVIDE FLASHING AS REQUIRED FOR A WATER TIGHT SEAL | | | | | |
| WH-1 | WALL HYDRANT | ENCASED, ANTI-SIPHON, AUTOMATIC DRAINING, COPPER CASING, ALL BRONZE INTERIOR WALL HYDRANT WITH NON-TURNING OPERATING ROD WITH FREE-FLOATING COMPRESSION CLOSURE VALVE, VANDAL-RESISTANT LOOSE TEE HANDLE OPERATING STEM, ADJUSTABLE PACKING NUT, INTEGRAL TAMPER PROOF VACUUM BREAKER, SINGLE TEMPERATURE 3/4" INLET MALE END CONNECTION, CHROME-PLATED BOX AND HINGED COVER WITH LOOSE OPERATING KEY, NON-FREEZE CLIMATE | - | 1/2" | - | - | WOODFORD: B65-CH WOODFORD: B67-CH ZURN: Z1320-C |
| | MOUNTING HEIGHT | 18" ABOVE FINISHED GRADE OR FLOOR | | | | | |
| K-33 | GENERIC FIXTURE: COMMERCIAL KITCHEN, SODA BAG-N-BOX | 1/2" FILTERED WATER CONNECTION FOR SODA FOUNTAIN BAG-N-BOX, PROVIDE DUAL CHECK VALVE FOR CARBONATED BEVERAGE MACHINES (WATTS SD-2 OR EQUAL), PROVIDE BACKFLOW PREVENTION IN ACCORDANCE WITH LOCAL REQUIREMENTS IN AN ACCESSIBLE LOCATION, COORDINATE THE LOCATION AND SIZE OF ALL PLUMBING CONNECTIONS WITH KITCHEN CONNECTION PLANS, MANUFACTURER RECOMMENDATIONS, AND LOCAL REQUIREMENTS PRIOR TO ROUGH-IN. MAKE ANY ADJUSTMENTS NECESSARY TO PROVIDE A FULLY FUNCTIONING FIXTURE | - | 1/2" | - | - | |
| K-36 | GENERIC FIXTURE: COMMERCIAL KITCHEN, COMMERCIAL ICE MACHINE | 1/2" FILTERED WATER CONNECTION FOR COMMERCIAL ICE MAKER, PROVIDE BACKFLOW PREVENTION IN ACCORDANCE WITH LOCAL REQUIREMENTS IN AN ACCESSIBLE LOCATION, ROUTE ICE MACHINE DRAIN LINE FROM UNIT TO APPROVED DRAIN IN ACCORDANCE WITH MANUFACTURER AND LOCAL CODE REQUIREMENTS, COORDINATE THE LOCATION AND SIZE OF ALL PLUMBING CONNECTIONS WITH KITCHEN CONNECTION PLANS, MANUFACTURER RECOMMENDATIONS, AND LOCAL REQUIREMENTS PRIOR TO ROUGH-IN. MAKE ANY ADJUSTMENTS NECESSARY TO PROVIDE A FULLY FUNCTIONING FIXTURE, (1) SANITARY CONNECTION(S) | - | 1/2" | - | - | |
| K-40 | FLOOR MOP SINK | 304 STAINLESS STEEL, PLAIN CURBS, ONE PIECE 20"X28"X12" RECTANGULAR BASIN | 1/2" | 1/2" | 1 1/4" | 2" | EAGLE F2820-12 |
| | FLOOR MOP SINK FAUCET | SEE FOOD SERVICE DRAWINGS | | | | | |
| | SUPPLIES | 1/2" HOT AND COLD WATER WITH CONCEALED STOP WITH WHEEL HANDLE, 1/2" CHROME PLATED FLEXIBLE BRASS RISER | | | | | |
| K-45A | GENERIC FIXTURE: COMMERCIAL KITCHEN, KITCHEN HAND SINK | 1/2" DOMESTIC HOT AND COLD WATER CONNECTIONS FOR KITCHEN HAND SINK - FIXTURE, FAUCET, AND DRAIN BY OTHERS, PROVIDE CHROME PLATED ANGLE STOPS WITH LOOSE KEY HANDLE, CHROMATED PLATED FEXIBLE BRASS RISER, 1 1/2" 17 GAUGE CHROME PLATED ADJUSTABLE BRASS P-TRAP WITH CLEANOUT PLUG, 1 1/2" NICKEL PLATED BRASS TAILPIECE, RUN WASTE PARALLEL AND AS TIGHT TO WALL AS POSSIBLE, 110 DEG. F. HOT WATER, SINGLE FAUCET ROUGH-IN, COORDINATE THE LOCATION AND SIZE OF ALL PLUMBING CONNECTIONS WITH KITCHEN CONNECTION PLANS, MANUFACTURER RECOMMENDATIONS, AND LOCAL REQUIREMENTS PRIOR TO ROUGH-IN. MAKE ANY ADJUSTMENTS NECESSARY TO PROVIDE A FULLY FUNCTIONING FIXTURE, (1) 1 1/2" DRAIN SANITARY CONNECTION(S) | 1/2" | 1/2" | 1 1/4" | 1 1/2" | |
| K-46A | GENERIC FIXTURE: COMMERCIAL KITCHEN, KITCHEN HAND SINK | 1/2" DOMESTIC HOT AND COLD WATER CONNECTIONS FOR KITCHEN HAND SINK - FIXTURE, FAUCET, AND DRAIN BY OTHERS, PROVIDE CHROME PLATED ANGLE STOPS WITH LOOSE KEY HANDLE, CHROMATED PLATED FEXIBLE BRASS RISER, 1 1/2" 17 GAUGE CHROME PLATED ADJUSTABLE BRASS P-TRAP WITH CLEANOUT PLUG, 1 1/2" NICKEL PLATED BRASS TAILPIECE, RUN WASTE PARALLEL AND AS TIGHT TO WALL AS POSSIBLE, 110 DEG. F. HOT WATER, SINGLE FAUCET ROUGH-IN, COORDINATE THE LOCATION AND SIZE OF ALL PLUMBING CONNECTIONS WITH KITCHEN CONNECTION PLANS, MANUFACTURER RECOMMENDATIONS, AND LOCAL REQUIREMENTS PRIOR TO ROUGH-IN. MAKE ANY ADJUSTMENTS NECESSARY TO PROVIDE A FULLY FUNCTIONING FIXTURE, (1) 1 1/2" DRAIN SANITARY CONNECTION(S) | 1/2" | 1/2" | 1 1/4" | 1 1/2" | |

RELEASE FOR CONSTRUCTION
AS NOTED ON PLANS AND REVIEW
DEVELOPMENT SERVICES
LEE'S SUMMIT, MISSOURI
03/10/2021


Bergmeyer
www.bergmeyer.com
LA - 800 South Figueroa St. Suite 1100 Los Angeles, CA 90017 212.337.1090
BOS - 51 Sleeper St. 4th Floor Boston, MA 02210 617.542.1025

CONSULTANTS:
Schnackel engineers
800-581-0963
www.schnackel.com
SE JOB# 200363


SEAL/ SIGNATURE:
STATE OF MISSOURI — GREGORY ROY SCHNACKEL — NUMBER E-026570 — PROFESSIONAL ENGINEER
Date: 03/05/21
COA #: E-2009006642

| NO. | BY | DATE | DESCRIPTION |
|---|---|---|---|
| 1 | | 2021-03-09 | ADDENDUM #1 |
| | | 2021-01-11 | PERMIT/BID SET |
| | | 2020-12-21 | 75% SET |
| | | 2020-10-12 | DD SET |

SHAKE SHACK

SHAKE SHACK - LEE'S SUMMIT MO

LEE'S SUMMIT
MISSOURI
SHACK #1348

PERMIT/BID SET

PLUMBING SCHEDULE

DRAWN BY: MJS
CHECKED BY: GRS
JOB NO: 20068.00

P601

RELEASE FOR CONSTRUCTION
AS NOTED ON PLANS REVIEW
DEVELOPMENT SERVICES
LEE'S SUMMIT, MISSOURI
03/10/2021

PLUMBING NOTES:
1. WATER HAMMER ARRESTORS SHALL BE SIZED AND INSTALLED IN ACCORDANCE WITH THE MANUFACTURER'S RECOMMENDATIONS. LOCATIONS SHOWN ARE FOR REFERENCE PURPOSES ONLY.

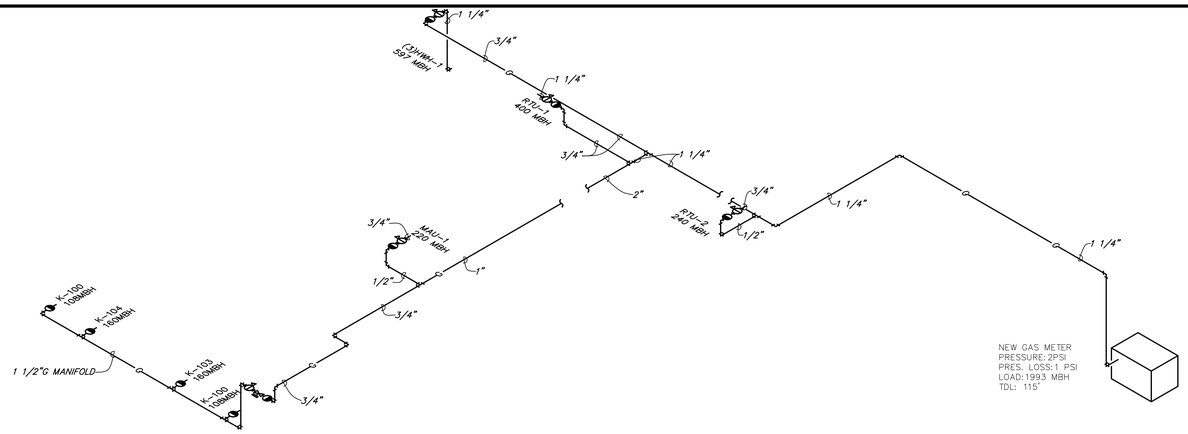


3 GAS RISER DIAGRAM
NOT TO SCALE

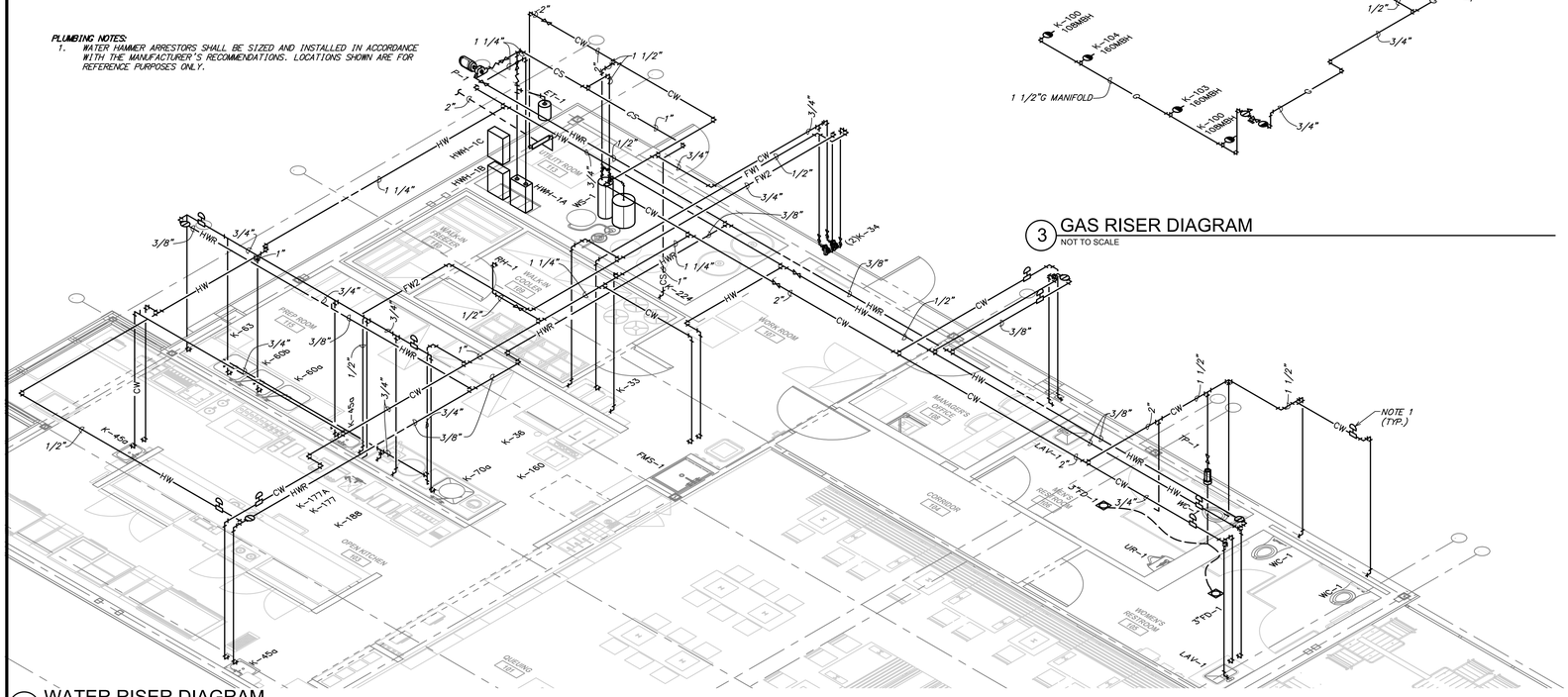


2 WATER RISER DIAGRAM
NOT TO SCALE

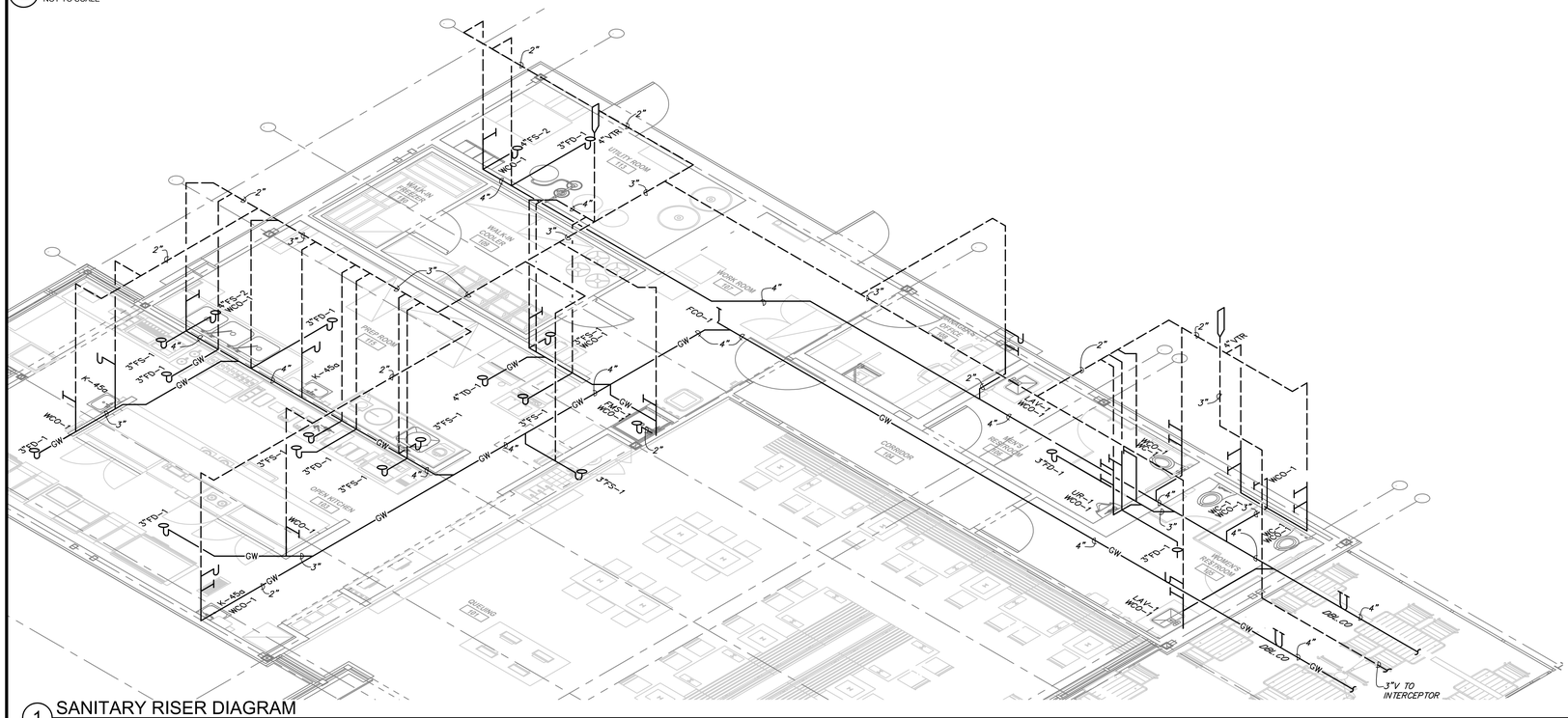


1 SANITARY RISER DIAGRAM
NOT TO SCALE


Bergmeyer
BOS
51 Sleeper St.
6th Floor
Boston, MA 02210
617.542.1025
LA
800 South Figueroa St.
Suite 1080
Los Angeles, CA 90017
212.337.1090
www.bergmeyer.com

CONSULTANTS:
Schnackel engineers
800-581-0963
www.schnackel.com
SE JOB#: 200383


SEAL/ SIGNATURE:
STATE OF MISSOURI
GREGORY ROY SCHNACKEL
NUMBER
E-026570
REGISTERED PROFESSIONAL ENGINEER
Date: 03/05/21
COA #: E-2009006642

| NO. | BY | DATE | DESCRIPTION |
|---|---|---|---|
| 1 | | 2021-03-09 | ADDENDUM #1 |
| | | 2021-01-11 | PERMIT/BID SET |
| | | 2020-12-21 | 75% SET |
| | | 2020-10-12 | DD SET |

SHAKE SHACK

SHAKE SHACK - LEE'S SUMMIT MO

LEE'S SUMMIT
MISSOURI
SHACK #1348

PERMIT/BID SET

PLUMBING RISERS

| | |
|---|---|
| DRAWN BY: | MJS |
| CHECKED BY: | GRS |
| JOB NO: | 20068.00 |

P901

RELEASE FOR CONSTRUCTION
AS NOTED ON PLANS REVIEW
DEVELOPMENT SERVICES
LEE'S SUMMIT, MISSOURI
03/10/2021


| SHEET NUMBER | SHEET NAME |
|---|---|
| E001 | ELECTRICAL ABBREVIATIONS AND SYMBOLS |
| E100 | SITE ELECTRICAL PLAN |
| E101 | ELECTRICAL POWER PLAN |
| E102 | LOW VOLTAGE SYSTEMS PLAN |
| E120 | ELECTRICAL LIGHTING PLAN |
| E150 | ELECTRICAL ROOF PLAN |
| E501 | ELECTRICAL DETAILS |
| E590 | ELECTRICAL SPECIFICATIONS |
| E591 | ELECTRICAL SPECIFICATIONS |
| E601 | ELECTRICAL SCHEDULES AND ONE-LINE |
| E620 | LIGHTING SCHEDULES |
| E621 | LUTRON VIVE ONE-LINE |
| E622 | LUTRON VIVE ONE-LINE |


| DESCRIPTION | FURNISHED: GENERAL CONTRACTOR | FURNISHED: OWNER | FURNISHED: LANDLORD | INSTALLED: GENERAL CONTRACTOR | INSTALLED: OWNER | INSTALLED: LANDLORD | REMARKS |
|---|---|---|---|---|---|---|---|
| **DIVISION 26: ELECTRICAL** | | | | | | | |
| 26.1 ELECTRICAL IDENTIFICATION | X | | | X | | | |
| 26.2 POWER DISTRIBUTION SYSTEM | | | | | | | |
| 26.2.1 MAIN SERVICE GEAR AND TRANSFORMERS | X | | | X | | | |
| 26.2.2 MAIN SERVICE CONDUIT | | | X | | | X | LANDLORD TO TERMINATE CONDUIT WITHIN WITHIN 5 FEET OF BUILDING |
| 26.2.3 MAIN SERVICE WIRING | X | | | X | | | |
| 26.2.4 MAIN SERVICE FUSES | X | | | X | | | |
| 26.2.5 TRANSFORMER | | | X | X | | | |
| 26.2.6 TENANT DISTRIBUTION PANELS AND BREAKERS | X | | | X | | | |
| 26.2.7 CONDUIT, WIRE, OUTLETS, AND SWITCHES | X | | | X | | | |
| 26.2.8 KITCHEN EQUIPMENT FINAL CONNECTION | X | | | X | | | |
| 26.2.9 SIGNAGE CONDUIT AND WIRING | X | | | X | | | |
| 26.3 LIGHTING DEVICES | | | | | | | |
| 26.3.1 PARKING LOT LIGHTING | | | X | | | X | GENERAL CONTRACTOR SCOPE OF WORK TO INCLUDE POWER TO LIGHTING FIXTURES |
| 26.3.2 EXTERIOR LIGHTING | X | | | X | | | GENERAL CONTRACTOR TO PURCHASE FROM VENDOR NO. 1 VENDOR SUBSTITUTION IS NOT PERMITTED |
| 26.3.3 EMERGENCY LIGHTING | X | | | X | | | GENERAL CONTRACTOR TO PURCHASE FROM VENDOR NO. 1 VENDOR SUBSTITUTION IS NOT PERMITTED SCOPE OF WORK TO INCLUDE INTERIOR AND EXTERIOR |
| 26.3.4 INCANDESCENT, DECORATIVE, AND FLUOR LIGHTING | X | | | X | | | GENERAL CONTRACTOR TO PURCHASE FROM VENDOR NO. 1 VENDOR SUBSTITUTION IS NOT PERMITTED |
| 26.3.5 CUSTOM FIXTURES | X | | | X | | | GENERAL CONTRACTOR TO PURCHASE FROM VENDOR NO. 1 VENDOR SUBSTITUTION IS NOT PERMITTED |
| 26.3.6 DIMMING SYSTEM | X | | | X | | | GENERAL CONTRACTOR TO PURCHASE FROM VENDOR NO. 1 VENDOR SUBSTITUTION IS NOT PERMITTED |
| 26.3.7 DIMMING SYSTEM | X | | | X | | | GENERAL CONTRACTOR TO PURCHASE FROM VENDOR NO. 1 VENDOR SUBSTITUTION IS NOT PERMITTED |
| 26.4 LOW VOLTAGE | | | | | | | |
| 26.4.1 CONDUIT AND WIRING | X | | | X | | | GENERAL CONTRACTOR TO COORDINATION WITH VENDOR NO. 31 |
| 26.4.2 DEVICES AND OVERPLATES | | X | | | X | | SUPPLIED AND INSTALLED BY VENDOR NO. 31 |
| **DIVISION 27: COMMUNICATIONS** | | | | | | | |
| 27.1 TELECOMMUNICATIONS IDENTIFICATION | | X | | | X | | |
| 27.2 TELECOMMUNICATIONS | | | | | | | |
| 27.2.1 IT EQUIPMENT RACK AND CABLE BOX RACK | | X | | | X | | SUPPLIED AND INSTALLED BY VENDOR NO. 31 |
| 27.2.2 TELELPHONE - 25 PAIR CABLE | X | | | X | | | GENERAL CONTRACTOR SCOPE OF WORK TO INCLUDE INSTALLATION OF CABLE FOR DEMARK EXTENTION FROM BASE BUILDING TELEPHONE CLOSET |
| 27.2.3 PHONE - 66 BLOCK | X | | | X | | | |
| 27.2.4 2" CONDUIT FOR TELEPHONE SERVICE | | | X | | | X | VOICE OVER IP |
| 27.3 TELEVISIONS | | | | | | | |
| 27.3.1 CONDUIT AND WIRING | X | | | X | | | |
| 27.3.2 MOUNTS | | X | | | X | | SUPPLIED AND INSTALLED BY VENDOR NO. 31 GENERAL CONTRACTOR SCOPE OF WORK TO INCLUDE PROVIDING BLOCKING |
| 27.3.3 DEVICES | | X | | | X | | SUPPLIED AND INSTALLED BY VENDOR NO. 31 |
| O | | | | | | | |
| 27.4.1 POWER | X | | | X | | | |
| 27.4.2 EQUIPMENT | | X | | | X | | |
| **DIVISION 28: ELECTRONIC SAFETY AND SECURITY** | | | | | | | |
| 28.1 SECURITY ALARM SYSTEM | | | | | | | |
| 28.1.1 CONDUIT AND WIRING | X | | | X | | | |
| 28.1.2 DEVICES | | X | | | X | | GENERAL CONTRACTOR TO COORDINAT WITH VENDOR NO. 33 ON ADDITIONAL SCOPE OF WORK WHICH INCLUDES THE INSTALLATION OF CONDUIT FROM KEYPAD TO MANAGER'S OFFICE, BACK BOX, CONDUIT AND WIRING TO EMERGENCY CIRCUIT |
| 28.2 SECURITY CAMERAS | | | | | | | |
| 28.2.1 CONDUIT AND WIRING | X | | | X | | | |
| 28.2.2 DEVICES | | X | | | X | | SUPPLIED AND INSTALLED BY VENDOR NO. 33 CONSTRUCTION CAMERAS ARE PURCHASED BY THE G.C. FROM VENDOR NO. 44 AND INSTALLED BY THE G.C. |
| 28.3 SPEAKERS | | | | | | | |
| 28.3.1 CONDUIT AND WIRING | X | | | X | | | |
| 28.3.2 DEVICES | | X | | | X | | SUPPLIED AND INSTALLED BY VENDOR NO. 33 |
| 28.4 FIRE ALARM SYSTEM | | | | | | | |
| 28.4.1 SYSTEM ENGINEER | X | | | X | | | |
| 28.4.2 CONNECTION TO BASE BUILDING SYSTEM | X | | | X | | | |
| 28.4.3 DEVICES | | | X | | | X | |

## ELECTRICAL SYMBOL LEGEND (SOME MAY NOT BE USED)

| SYMBOL | DESCRIPTION | SYMBOL | DESCRIPTION |
|---|---|---|---|
| | WALL MOUNTED SINGLE RECEPTACLE, NEMA 5-20R | | PANELBOARD, LIGHTING AND APPLIANCE |
| | WALL MOUNTED DUPLEX RECEPTACLE | | POWER DISTRIBUTION PANEL OR SWITCHBOARD |
| | WALL MOUNTED DEDICATED DUPLEX RECEPTACLE | | METER AND SOCKET |
| | WALL MOUNTED DUPLEX RECEPTACLE, ONE RECEPTACLE SWITCHED OR SPLIT-WIRED | J | WALL MOUNTED JUNCTION/OUTLET BOX |
| | WALL MOUNTED QUADRUPLEX RECEPTACLE | J | FLUSH FLOOR MOUNTED JUNCTION/OUTLET BOX |
| | WALL MOUNTED DEDICATED QUADRUPLEX RECEPTACLE | J C | CEILING MOUNTED JUNCTION/OUTLET BOX |
| | WALL MOUNTED QUADRUPLEX RECEPTACLE, SPLIT-WIRED | J | JUNCTION BOX MOUNTED ABOVE CEILING |
| | WALL MOUNTED SPECIAL RECEPTACLE, NEMA CONFIGURATION AS NOTED | | MULTI-OUTLET ASSEMBLY |
| | WALL MOUNTED RANGE RECEPTACLE, NEMA 14-50R UNLESS INDICATED OTHERWISE | | CORD AND PLUG |
| | FLUSH FLOOR MOUNTED SINGLE RECEPTACLE, NEMA 5-20R | M | MOTOR |
| | FLUSH FLOOR MOUNTED DUPLEX RECEPTACLE | XX/X XXA FUSES | SAFETY SWITCH, SIZE AS INDICATED ON PLAN |
| | FLUSH FLOOR MOUNTED DEDICATED DUPLEX RECEPTACLE | | |
| | FLUSH FLOOR MOUNTED DUPLEX RECEPTACLE, SPLIT-WIRED | XX/X XXA FUSES | COMBINATION MAGNETIC MOTOR STARTER AND DISCONNECT SWITCH, SIZE AS INDICATED ON PLAN |
| | FLUSH FLOOR MOUNTED QUADRUPLEX RECEPTACLE | | |
| | FLUSH FLOOR MOUNTED DEDICATED QUADRUPLEX RECEPTACLE | $MOD | SWITCH. SPST UNLESS INDICATED WITH MODIFIER. HORSEPOWER RATED WHEN USED FOR MOTOR CONTROL OR DISCONNECTING MEANS.<br>SWITCH MODIFIERS, INCLUDING COMBINATIONS THEREOF:<br>2: DPST.<br>3: 3-WAY (SPDT).<br>4: 4-WAY.<br>D: DIMMER.<br>F: BOX COVER UNIT, BUSSMANN SSU SERIES.<br>G: GLOW HANDLE (HANDLE GLOWS WHEN SWITCH IS OFF).<br>H: HORIZONTALLY MOUNTED.<br>K: KEY OPERATED.<br>M: MANUAL MOTOR CONTROLLER WITH OVERLOAD HEATER.<br>SB: SWITCH BANK (GANGED SWITCHES)<br>OS1: OCCUPANCY SENSOR.<br>OS2: DUAL-RELAY OCCUPANCY SENSOR.<br>P: PILOT LIGHT (PILOT ON WHEN SWITCH IS ON).<br>T: TIMER.<br>LV: LOW VOLTAGE.<br>OR: OVERRIDE.<br>OT: OVERRIDE WITH TIMER.<br>WP: WEATHERPROOF<br>DTC: SPDT, CENTER OFF, MAINTAINED CONTACT.<br>DTM: SPDT, CENTER OFF, MOMENTARY CONTACT.<br>LOWERCASE LETTER: CONTROL LUMINAIRE WITH SAME LETTER. |
| | FLUSH FLOOR MOUNTED QUADRUPLEX RECEPTACLE, SPLIT-WIRED | | |
| | FLUSH FLOOR MOUNTED SPECIAL RECEPTACLE, NEMA CONFIGURATION AS NOTED | | |
| | ABOVE FLOOR SERVICE FITTING, HUBBELL #SC3098A OR EQUAL; NEMA CONFIGURATION AS NOTED | | |
| C/DC | CEILING MOUNTED SINGLE RECEPTACLE, NEMA 5-20R (C=FLUSH CEILING, DC=DROPCORD) | | |
| C/DC | CEILING MOUNTED DUPLEX RECEPTACLE (C=FLUSH CEILING, DC=DROPCORD) | | |
| C/DC | CEILING MOUNTED DEDICATED DUPLEX RECEPTACLE (C=FLUSH CEILING, DC=DROPCORD) | | |
| C/DC | CEILING MOUNTED DUPLEX RECEPTACLE, SPLIT-WIRED (C=FLUSH CEILING, DC=DROPCORD) | | |
| C/DC | CEILING MOUNTED QUADRUPLEX RECEPTACLE (C=FLUSH CEILING, DC=DROPCORD) | | |
| C/DC | CEILING MOUNTED DEDICATED QUADRUPLEX RECEPTACLE (C=FLUSH CEILING, DC=DROPCORD) | | |
| C/DC | CEILING MOUNTED QUADRUPLEX RECEPTACLE, SPLIT-WIRED (C=FLUSH CEILING, DC=DROPCORD) | | |
| C/DC | CEILING MOUNTED SPECIAL RECEPTACLE, NEMA CONFIGURATION AS NOTED (C=FLUSH CEILING, DC=DROPCORD) | PS | CEILING MOUNTED PHOTOSENSOR |
| | BRANCH CIRCUITING, CONCEALED IN WALL OR CEILING | MS | CEILING MOUNTED MOTION SENSOR |
| | BRANCH CIRCUITING, CONCEALED IN OR UNDER FLOOR | OS | CEILING MOUNTED OCCUPANCY SENSOR |
| | BRANCH CIRCUITING, EXPOSED | OS | WALL MOUNTED OCCUPANCY SENSOR |
| | HOMERUN TO PANEL. THE NUMBER OF ARROWS INDICATES THE NUMBER OF CIRCUITS. TWO WIRES UNLESS NOTED OTHERWISE; SLASHES INDICATE NUMBER OF WIRES. GROUND WIRE IS REQUIRED BUT NOT INDICATED. A 7 INDICATES ISOLATED GROUND CONDUCTOR. | TC | AUTOMATIC TIMECLOCK |
| | | PC | PHOTOCELL |
| | | XX | TRACK LIGHTING LIVE END FEED; "XX" INDICATES CURRENT LIMITER RATING IF APPLICABLE |
| | CONDUIT STUB | XXX RPS | LOW VOLTAGE LIGHTING POWER SUPPLY/TRANSFORMER; "XXX" INDICATES WATTAGE RATING |
| | VERTICAL CONDUIT/CIRCUIT | ALCR | UL 924 AUTOMATIC LOAD CONTROL RELAY; HUBBELL CONTROL SYSTEMS #ALCR1277 OR EQUAL |
| B | BELL | GTD | UL 1008 BRANCH CIRCUIT EMERGENCY LIGHTING TRANSFER SWITCH; BODINE #GTD20A OR EQUAL |
| B | BUZZER | | FLOOR MOUNTED TELEPHONE OUTLET; *P DENOTES NUMBER OF TELEPHONE PORTS |
| B | CHIME | C | CEILING MOUNTED TELEPHONE OUTLET; *P DENOTES NUMBER OF TELEPHONE PORTS |
| S | SPEAKER, CEILING | | WALL MOUNTED TELEPHONE OUTLET; *P DENOTES NUMBER OF TELEPHONE PORTS |
| S | SPEAKER, WALL | | FLOOR MOUNTED DATA OUTLET; *D DENOTES NUMBER OF DATA PORTS |
| S G | SPEAKER, GROUND-MOUNTED | C | CEILING MOUNTED DATA OUTLET; *D DENOTES NUMBER OF DATA PORTS |
| VC | VOLUME CONTROL | | WALL MOUNTED DATA OUTLET; *D DENOTES NUMBER OF DATA PORTS |
| AMP | SOUND SYSTEM AMPLIFIER | | FLOOR MOUNTED COMBINATION TELEPHONE AND DATA OUTLET; *P/*D DENOTES NUMBER OF TELEPHONE/DATA PORTS |
| TR | LOW VOLTAGE CONTROL TRANSFORMER | C | CEILING MOUNTED COMBINATION TELEPHONE AND DATA OUTLET; *P/*D DENOTES NUMBER OF TELEPHONE/DATA PORTS |
| R | RELAY | | WALL MOUNTED COMBINATION TELEPHONE AND DATA OUTLET; *P/*D DENOTES NUMBER OF TELEPHONE/DATA PORTS |
| | PUSHBUTTON STATION, ONE BUTTON | | 3/4" THICK PLYWOOD BACKBOARD, SIZE AS INDICATED ON DRAWINGS |
| | PUSHBUTTON STATION, TWO BUTTON | TV | FLOOR MOUNTED TELEVISION OUTLET |
| | PUSHBUTTON STATION, THREE BUTTON | TV C | CEILING MOUNTED TELEVISION OUTLET |
| | | TV | WALL MOUNTED TELEVISION OUTLET |

## ABBREVIATIONS AND MODIFIERS (SOME MAY NOT BE USED)

AFF ABOVE FINISHED FLOOR
AFG ABOVE FINISHED GRADE
NIC NOT IN CONTRACT
UNO UNLESS NOTED OTHERWISE
N.F. NON-FUSED
GFPE GROUND-FAULT PROTECTION OF EQUIPMENT
ERMS ARC ENERGY REDUCING MAINTENANCE SWITCH
ST SHUNT TRIP MODIFIER
GND GROUND
EGC EQUIPMENT GROUNDING CONDUCTOR
GEC GROUNDING ELECTRODE CONDUCTOR
AHJ AUTHORITY HAVING JURISDICTION
NEC NATIONAL ELECTRICAL CODE (NFPA 70)

SPST SINGLE POLE, SINGLE THROW
DPST DOUBLE POLE, SINGLE THROW
3PST THREE POLE, SINGLE THROW
4PST FOUR POLE, SINGLE THROW
SPDT SINGLE POLE, DOUBLE THROW
DPDT DOUBLE POLE, DOUBLE THROW
3PDT THREE POLE, DOUBLE THROW
4PDT FOUR POLE, DOUBLE THROW
EM EMERGENCY LIGHT MODIFIER
NL NIGHTLIGHT LUMINAIRE MODIFIER
+XX" MOUNTING HEIGHT MODIFIER

WP WEATHERPROOF MODIFIER
PT POKE-THROUGH MODIFIER
H HORIZONTAL MOUNT MODIFIER
HG HOSPITAL GRADE MODIFIER
IG ISOLATED GROUND MODIFIER
TR TAMPER-RESISTANT MODIFIER
SP SURGE PROTECTION MODIFIER
GFCI GROUND-FAULT CIRCUIT INTERRUPTER MODIFIER
SR SHOW WINDOW RECEPTACLE MOUNTED WITHIN 18 INCHES OF TOP OF SHOW WINDOW
CR CONTROLLED RECEPTACLE MODIFIER
CH CLOCK HANGER RECEPTACLE
USB DEVICE WITH USB PORT(S) MODIFIER

## CX SUBMITTAL MATRIX

GENERAL CONTRACTORS TO ALSO REVIEW ARCHITECTRUAL SPECIFICATIONS AS NOTED IN PLANS IN PLAN SECTION 700 OF THE ARCHITECTURAL PACKAGE FOR REQUIRED SUBMITTALS THAT MIGHT NOT BE LISTED BELOW.

| SUBMITTAL DECRIPTION | Required Review Time (Business Days) | Architect of Record | Shake Shack | Commissioning Agent | Physical Sample Required | Submittal for Record | Submittal for Record Only |
|---|---|---|---|---|---|---|---|
| Anchor Bolts Shops | 5 | X | | | | X | |
| ATAS-Detailed Shop DWGS(Submitted by Owner Vendor to Owner/AOR prior to const.) | 5 | X | | | | | X |
| Concrete Mix Design | 5 | X | | | | X | |
| Construction Prefunctional Checklists | 5 | X | | X | | | X |
| Decorative Metal Shop Drawings | 5 | X | | | | | |
| Diffusers, Grills & Registers | 5 | X | | | | X | |
| Doors, Frames & Hardware | 7 | X | | | | X | |
| Ductwork Layout (if there are signifcant changes in field) | 5 | X | | X | | X | |
| Electrical Distribution Equipment | 5 | X | | X | | | |
| Elevator & Vertical Transportation Shop Drawings | 5 | X | | | | | X |
| Epoxy Floor | 5 | X | | | | | X |
| Fire Alarm Shop Drawings & Device Cut Sheets | 5 | x | | X | | X | |
| Fire Sprinkler Shop Drawings, Hydraulic Calculations & Device Cut Sheets | 5 | x | | X | | | X |
| HVAC Equipment(if Carrier - Submitted by Owner Vendor to Owner/AOR prior to const.) | 5 | x | | X | | X | |
| Light Fixtures(Submitted by Owner Vendor to Owner/AOR prior to construction) | 5 | X | | X | | X | |
| MEP Tests, Start-Up, and Programming Reports | 5 | X | | X | | X | |
| Millwork - Material Submittals (if differs from spec) | 5 | X | X | | X | | |
| Millwork - Shop Drawings (custom items & design features only) | 5 | X | | | | | |
| Restroom Partitions | 5 | X | | | | X | |
| Plumbing Fixtures | 5 | X | | X | | X | |
| Railing Shop Drawings | 5 | X | | | | | X |
| Rebar | 5 | X | | | | X | |
| Stair Shop Drawings | 5 | X | | | | | X |
| Structural Steel Shop Drawings | 7 | X | | | | X | |
| Storefront - product data Submittal (if different from specified) | 5 | X | | | | | |
| Storefront - Shop Drawings | 5 | X | | | | | |
| Tile (if differs from spec) | 5 | X | | | | X | |
| Window Film | 5 | X | | | | | |

## CX MATRIX

| Division | System / Equipment | Flush & Clean / Sanitize | Pneumatic Pressure Test | Hydrostatic Pressure Test | Duck Leak Test | Insulation Resistance (Megger) Test | Current Testing | Startup | Contractor Prefunctional Checklists | Functional Performance Test (Validation) |
|---|---|---|---|---|---|---|---|---|---|---|
| 26 | Electrical branch breakers and cables | | | | | X | X | | X | X |
| 26 | Low-voltage breakers and cables | | | | | X | X | | X | |
| 26 | Lighting breakers and cables | | | | | X | X | | X | |
| 26 | Lighting controls | | | | | | | X | X | X |

## CxA SCOPE OF WORK

Division 26 - Electrical Commissioning Requirements

Scope of Work

- Verify power and lighting systems, subsystems, equipment, instrumentation, and control systems have been completed and calibrated to verify they are operating according to the Contract Documents and approved submittals.
- Validate the system is operable by setting the electrical and lighting systems into operating mode to be tested according to approved test procedures (for example; normal shutdown, normal auto position, normal manual position, alarm conditions, etc.).

Prefunctional Construction Checklists

- Normal power electrical systems and equipment.
- Electrical and lighting instrumentation and controls.
- Lighting systems and equipment.
- Electrical branch breakers and circuits.
- Low-voltage circuit breakers and switches.
- Ground-fault protection systems.
- Panelboards.
- Receptacles and devices.
- Variable-frequency drives.
- Metering devices.
- Protective relays.

Bergmeyer
BOS - 51 Sleeper St. 6th Floor Boston, MA 02210 617.542.1025
LA - 800 South Figueroa St. Suite 1080 Los Angeles, CA 90017 212.337.1090
www.bergmeyer.com

CONSULTANTS:
Schnackel engineers
800-581-0963
www.schnackel.com
SE JOB#: 200383

SEAL/ SIGNATURE:
STATE OF MISSOURI
GREGORY ROY SCHNACKEL
NUMBER E-026570
REGISTERED PROFESSIONAL ENGINEER
Date: 03/05/21
COA #: E-2009006642

| NO. | BY | DATE | DESCRIPTION |
|---|---|---|---|
| 1 | | 2021-03-09 | ADDENDUM #1 |
| | | 2021-01-11 | PERMIT/BID SET |
| | | 2020-12-21 | 75% SET |
| | | 2020-10-12 | DD SET |

SHAKE SHACK

SHAKE SHACK - LEE'S SUMMIT MO

LEE'S SUMMIT
MISSOURI
SHACK #1348

PERMIT/BID SET

ELECTRICAL ABBREVIATIONS & SYMBOLS

DRAWN BY: AEH
CHECKED BY: GRS
JOB NO: 20068.00

E001

RELEASE FOR CONSTRUCTION
AS NOTED ON PLANS REVIEW
DEVELOPMENT SERVICES
LEE'S SUMMIT, MISSOURI
03/10/2021

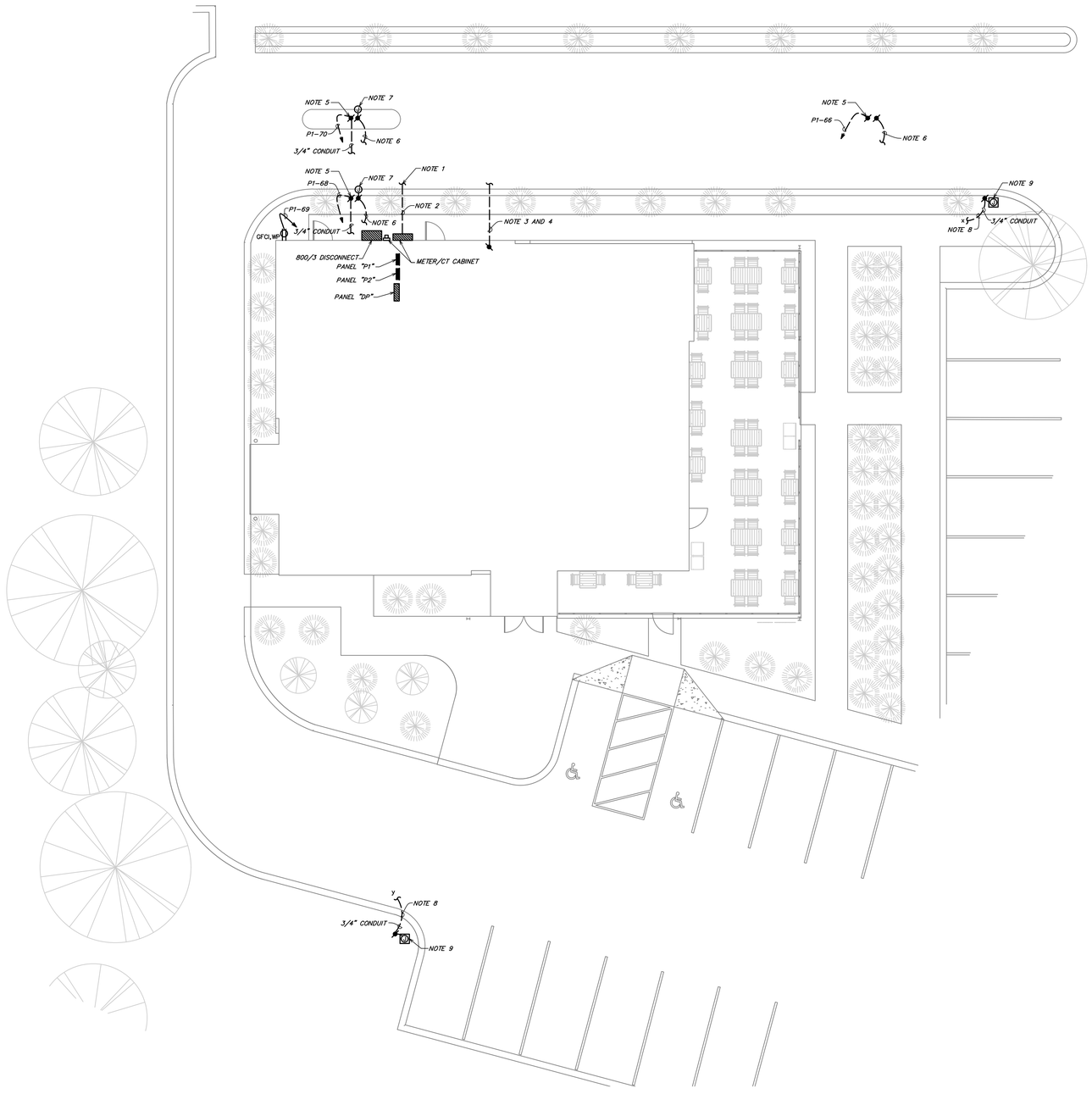


1 SITE ELECTRICAL PLAN
SCALE: 1/8" = 1'-0"

**GENERAL ELECTRICAL NOTES:**

A. WHERE THE MECHANICAL DESIGN UTILIZES A PLENUM RETURN AIR CEILING DESIGN, ALL EQUIPMENT AND MATERIALS INSTALLED WITHIN THE PLENUM RETURN CEILING MUST MEET THE FLAME SPREAD AND SMOKE DEVELOPED RATINGS OF 25/50 AND BE APPROVED FOR USE IN PLENUM RETURN CEILINGS. COORDINATE PLENUM CEILING LOCATIONS WITH THE MECHANICAL CONTRACTOR.
B. COORDINATE ALL DEVICE LOCATIONS AND CIRCUIT ROUTING WITHIN ANY MILLWORK WITH MILLWORK VENDOR PRIOR TO ROUGH-IN.
C. COORDINATE THE CONNECTIONS OF ALL EQUIPMENT PROVIDED BY OTHERS WITH THE CONTRACTOR PROVIDING THE EQUIPMENT PRIOR TO ROUGH-IN. THIS INCLUDES, BUT IS NOT LIMITED TO, MECHANICAL EQUIPMENT, KITCHEN EQUIPMENT, AUDIO/VISUAL EQUIPMENT, FIRE SUPPRESSION SYSTEM EQUIPMENT, FIRE ALARM EQUIPMENT, ETC. PROVIDE THE APPROPRIATE DISCONNECTING MEANS FOR, AND TO MAKE THE FINAL CONNECTION TO, ANY HARDWIRED EQUIPMENT. THE ELECTRICAL CONTRACTOR IS ALSO RESPONSIBLE TO PROVIDE AN APPROPRIATE CORD AND PLUG FOR ANY CORD-AND-PLUG CONNECTED EQUIPMENT THAT IS NOT EQUIPPED WITH AN INTERNAL CORD AND PLUG.
D. SEE PANEL SCHEDULES FOR INFORMATION ON CIRCUITS THAT ARE TO BE ROUTED THROUGH CONTACTORS OR RELAYS FOR CONTROL.
E. ALL EQUIPMENT, DEVICES, AND LUMINAIRES SHALL BE SUITABLE FOR THE ENVIRONMENT IN WHICH THEY ARE INSTALLED. EQUIPMENT MOUNTED OUTDOORS SHALL BE NEMA 3R. DEVICES MOUNTED IN DAMP OR WET LOCATIONS SHALL BE WEATHERPROOF. RECEPTACLES RATED 15- OR 20-AMPS AND 120 VOLTS WHICH ARE LOCATED IN DAMP OR WET LOCATIONS SHALL BE GFCI PROTECTED AND EQUIPPED WITH A SUITABLE WEATHERPROOF COVERPLATE (WHILE-IN-USE IN WET LOCATIONS).
F. ALL LUGS, TERMINALS, ETC. IN ELECTRICAL DISTRIBUTION EQUIPMENT SHALL BE LISTED FOR A MINIMUM OF 75 DEGREE C CONDUCTORS. TERMINATIONS LISTED FOR ONLY 60 DEGREE C CONDUCTORS ARE NOT PERMITTED.

**KEYED NOTES:**

1. INTERCEPT AND EXTEND LANDLORD PROVIDED SECONDARIES AT CONSTRUCTION LIMIT LINE. FIELD VERIFY EXACT LOCATION OF LANDLORD PROVIDED SECONDARIES PRIOR TO ROUGH-IN.
2. PROVIDE UNDERGROUND SECONDARY CONDUITS AND CONDUCTORS. SEE ONE-LINE DIAGRAM FOR ADDITIONAL INFORMATION.
3. PROVIDE ONE 2" UNDERGROUND PVC CONDUIT WITH PULL STRING PER TELEPHONE UTILITY COMPANY'S SPECIFICATIONS AND REQUIREMENTS FOR TELEPHONE SERVICE. COORDINATE EXACT ROUTING AND STUB-UP LOCATION WITH THE TELEPHONE UTILITY COMPANY AND CLEARLY MARK STUB-UP LOCATION. SUBMIT A LINEAL FOOT UNIT PRICE WITH THE BID FOR CONDUIT, OF EACH SIZE AND TYPE INDICATED.
4. PROVIDE ONE 2" UNDERGROUND PVC CONDUIT WITH PULL STRING PER CABLE TELEVISION UTILITY COMPANY'S SPECIFICATIONS AND REQUIREMENTS FOR CABLE TELEVISION SERVICE. COORDINATE EXACT ROUTING AND STUB-UP LOCATION WITH CABLE TELEVISION UTILITY COMPANY AND CLEARLY MARK STUB-UP LOCATION. SUBMIT A LINEAL FOOT UNIT PRICE WITH THE BID FOR CONDUIT, OF EACH SIZE AND TYPE INDICATED.
5. PROVIDE FINAL CONNECTION TO MENUBOARD. VERIFY EXACT ELECTRICAL REQUIREMENTS WITH EQUIPMENT MANUFACTURER PRIOR TO ROUGH-IN.
6. ROUTE (1) 2" CONDUIT WITH PULLSTRING BACK TO DRIVE-THRU WINDOW AT BUILDING. SEE SHEET E102 FOR ADDITIONAL INFORMATION.
7. PROVIDE BANER ENGINEERING CORP. T30R SERIES RADAR SENSOR, MODEL T30-R-1515-KQ0 FOR DRIVE-THRU VEHICLE SENSING. VERIFY EXACT LOCATION WITH OWNER/ARCHITECT PRIOR TO ROUGH-IN. VERIFY EXACT REQUIREMENTS WITH MANUFACTURER PRIOR TO ROUGH-IN.
8. CONNECT CIRCUIT VIA LOAD CONTROLLER(S) LOCATED IN MANAGER'S OFFICE. LOWERCASE LETTERS ADJACENT TO FIXTURES INDICATE CORRESPONDING LOAD CONTROLLER. SEE 2/E120 FOR ADDITIONAL INFORMATION. SEE LUTRON ONE-LINE DIAGRAMS SHEETS E821, E822 FOR CONTROL CONFIGURATION.
9. PROVIDE FINAL CONNECTION TO SIGNAGE. COORDINATE LOCATION AND ALL REQUIREMENTS WITH SIGN CONTRACTOR PRIOR TO ROUGH-IN. PROVIDE AN APPROPRIATE LOCAL DISCONNECTING MEANS MOUNTED IN AN ACCESSIBLE, INCONSPICUOUS LOCATION THAT IS WITHIN SIGHT OF THE SIGN. EACH SIGN CIRCUIT SHALL HAVE A SEPARATE NEUTRAL AND SEPARATE EQUIPMENT GROUNDING CONDUCTOR.

Bergmeyer
www.bergmeyer.com
LA - 800 South Figueroa St. Suite 1100 Los Angeles, CA 90017 212.337.1090
BOS - 51 Sleeper St. 4th Floor Boston, MA 02210 617.542.1025

CONSULTANTS:
Schnackel engineers
800-581-0963
www.schnackel.com
SE JOB# 200363

SEAL/ SIGNATURE:
STATE OF MISSOURI
GREGORY ROY SCHNACKEL
NUMBER E-026570
Date: 03/05/21
COA #: E-2009006642

| NO. | BY | DATE | DESCRIPTION |
|---|---|---|---|
| 1 | | 2021-03-09 | ADDENDUM #1 |
| | | 2021-01-11 | PERMIT/BID SET |
| | | 2020-12-21 | 75% SET |
| | | 2020-10-12 | DD SET |

SHAKE SHACK

SHAKE SHACK - LEE'S SUMMIT MO

LEE'S SUMMIT
MISSOURI
SHACK #1348

PERMIT/BID SET

SITE ELECTRICAL PLAN

| | |
|---|---|
| DRAWN BY: | AEH |
| CHECKED BY: | GRS |
| JOB NO: | 20068.00 |

E100

RELEASE FOR CONSTRUCTION
AS NOTED ON PLANS REVIEW
DEVELOPMENT SERVICES
LEE'S SUMMIT, MISSOURI
03/10/2021

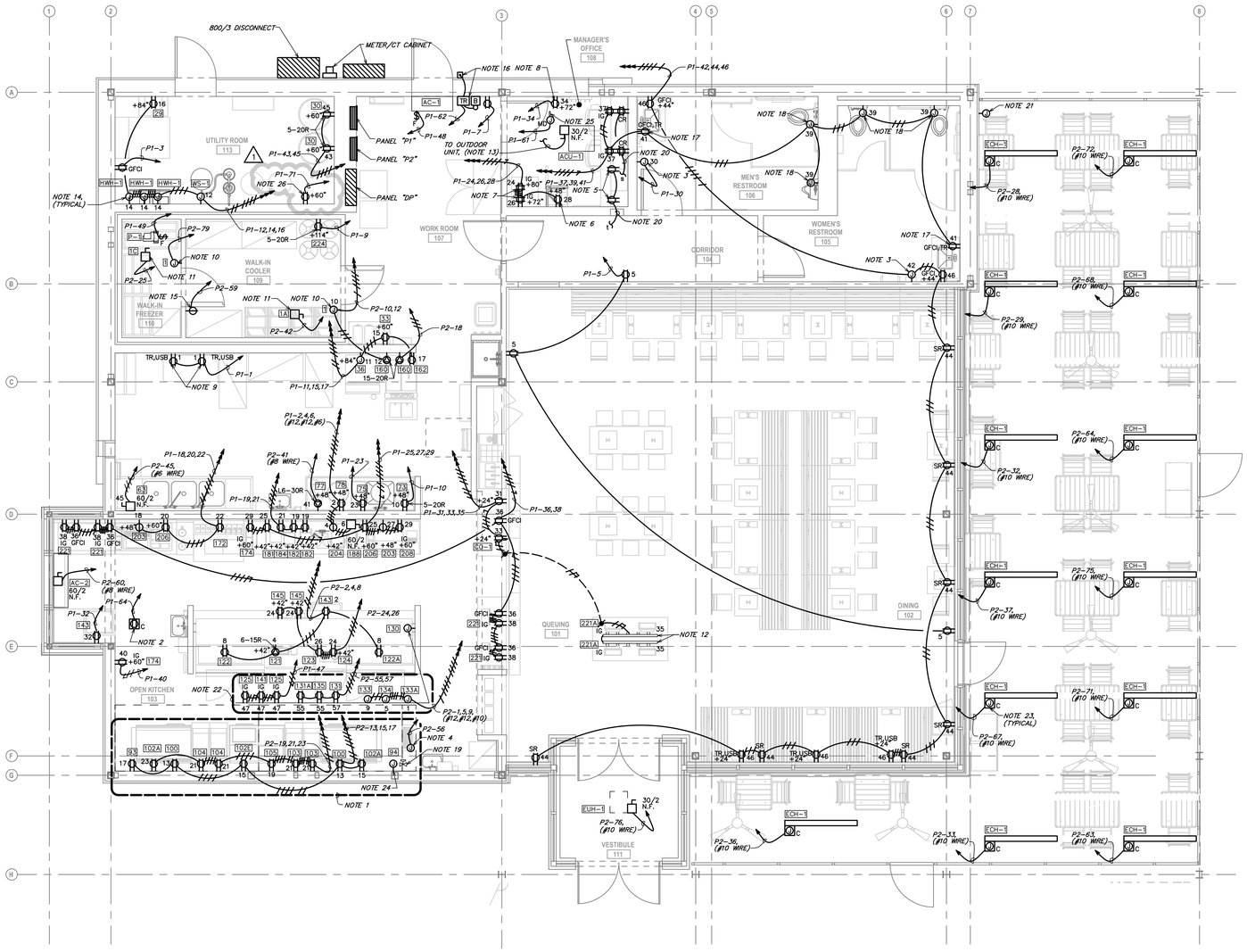


1 ELECTRICAL POWER PLAN
SCALE: 1/4" = 1'-0"

**GENERAL ELECTRICAL NOTES:**

A. WHERE THE MECHANICAL DESIGN UTILIZES A PLENUM RETURN AIR CEILING DESIGN, ALL EQUIPMENT AND MATERIALS INSTALLED WITHIN THE PLENUM RETURN CEILING MUST MEET THE FLAME SPREAD AND SMOKE DEVELOPED RATINGS OF 25/50 AND BE APPROVED FOR USE IN PLENUM RETURN CEILINGS. COORDINATE PLENUM CEILING LOCATIONS WITH THE MECHANICAL CONTRACTOR.
B. COORDINATE ALL DEVICE LOCATIONS AND CIRCUIT ROUTING WITHIN ANY MILLWORK WITH MILLWORK VENDOR PRIOR TO ROUGH-IN.
C. COORDINATE THE CONNECTIONS OF ALL EQUIPMENT PROVIDED BY OTHERS WITH THE CONTRACTOR PROVIDING THE EQUIPMENT PRIOR TO ROUGH-IN. THIS INCLUDES, BUT IS NOT LIMITED TO, MECHANICAL EQUIPMENT, KITCHEN EQUIPMENT, AUDIO/VISUAL EQUIPMENT, FIRE SUPPRESSION SYSTEM EQUIPMENT, FIRE ALARM EQUIPMENT, ETC. PROVIDE THE APPROPRIATE DISCONNECTING MEANS FOR, AND TO MAKE THE FINAL CONNECTION TO, ANY HARDWIRED EQUIPMENT. THE ELECTRICAL CONTRACTOR IS ALSO RESPONSIBLE TO PROVIDE AN APPROPRIATE CORD AND PLUG FOR ANY CORD-AND-PLUG CONNECTED EQUIPMENT THAT IS NOT EQUIPPED WITH AN INTERNAL CORD AND PLUG.
D. SEE PANEL SCHEDULES FOR INFORMATION ON CIRCUITS THAT ARE TO BE ROUTED THROUGH CONTACTORS OR RELAYS FOR CONTROL.
E. ALL EQUIPMENT, DEVICES, AND LUMINAIRES SHALL BE SUITABLE FOR THE ENVIRONMENT IN WHICH THEY ARE INSTALLED. EQUIPMENT MOUNTED OUTDOORS SHALL BE NEMA 3R. DEVICES MOUNTED IN DAMP OR WET LOCATIONS SHALL BE WEATHERPROOF. RECEPTACLES RATED 15- OR 20-AMPS AND 120 VOLTS WHICH ARE LOCATED IN DAMP OR WET LOCATIONS SHALL BE GFCI PROTECTED AND EQUIPPED WITH A SUITABLE WEATHERPROOF COVERPLATE (WHILE-IN-USE IN WET LOCATIONS).
F. ALL LUGS, TERMINALS, ETC. IN ELECTRICAL DISTRIBUTION EQUIPMENT SHALL BE LISTED FOR A MINIMUM OF 75 DEGREE C CONDUCTORS. TERMINATIONS LISTED FOR ONLY 60 DEGREE C CONDUCTORS ARE NOT PERMITTED.

**KEYED NOTES:**

1. PROVIDE RECEPTACLE WITH WEATHERPROOF WHILE-IN-USE COVER.
2. PROVIDE RECEPTACLE FOR DRIVE-THRU NOTIFICATION SYSTEM POWER SUPPLY. VERIFY EXACT LOCATION WITH OWNER/ARCHITECT PRIOR TO ROUGH-IN.
3. PROVIDE FINAL CONNECTION TO HAND DRYER. COORDINATE MOUNTING HEIGHT WITH ARCHITECT AND ALL REQUIREMENTS WITH EQUIPMENT MANUFACTURER PRIOR TO ROUGH-IN.
4. PROVIDE ALL WIRING AND COMPONENTS INDICATED AS FIELD WIRING IN THE HOOD CONTROL PANEL WIRING DIAGRAM. VERIFY AND COORDINATE ALL REQUIREMENTS WITH THE HOOD CONTROL PANEL MANUFACTURER AND MECHANICAL CONTRACTOR PRIOR TO ROUGH-IN.
5. PROVIDE RECEPTACLES FOR UNDERCABINET LIGHTS INSTALLED IMMEDIATELY BELOW LOWEST SHELF. CONNECT TO CONTROLS SERVING MANAGER'S OFFICE OVERHEAD LIGHTING. REFER TO OFFICE ELEVATIONS ON ARCHITECTURAL SHEETS FOR LOCATIONS AND MOUNTING HEIGHTS.
6. PROVIDE RECEPTACLE ALIGNED WITH ADJACENT DATA OUTLET FOR PRINTER ON SAFE. REFER TO OFFICE ELEVATIONS ON ARCHITECTURAL SHEETS FOR LOCATION.
7. PROVIDE QUADRUPLEX IG RECEPTACLES STACKED VERTICALLY BEHIND THE IT RACK. SEE OFFICE ELEVATIONS ON ARCHITECTURAL SHEETS FOR LOCATIONS.
8. PROVIDE RECEPTACLE ALIGNED WITH ADJACENT DATA OUTLET FOR SECURITY ALARM PANEL. REFER TO OFFICE ELEVATIONS ON ARCHITECTURAL SHEETS FOR LOCATION.
9. PROVIDE CHARGING RECEPTACLES UNDER DESK. VERIFY EXACT LOCATION WITH OWNER/ARCHITECT PRIOR TO ROUGH-IN.
10. PROVIDE CONNECTION TO JUNCTION BOX ON WALK-IN COOLER/FREEZER FOR LIGHTS, DOOR HEATER, AND VENT HEATER AS REQUIRED. INSTALL LIGHT FIXTURES SHIPPED LOOSE WITH COOLER/FREEZER AND COMPLETE CONNECTION.
11. COORDINATE INTERCONNECTION AND CONTROL CABLING REQUIREMENTS BETWEEN CONDENSER AND EVAPORATOR WITH EQUIPMENT SUPPLIER.
12. PROVIDE 4'-0" METAL PLUG-STRIP WITH 20 AMP RECEPTACLES 6" ON CENTER. HUBBELL #HBL2420BSSGY OR APPROVED EQUAL AND INSTALL CONCEALED TO UNDERNEATH OF KIOSK TABLE. STUB CONDUIT OUT OF WALL TO ALIGN WITH UNDERSIDE OF KIOSK TABLE FOR CONNECTION. CONCEAL ALL CONDUIT AND PLUG STRIPS BELOW KIOSK TABLE.
13. INDOOR UNIT OF SPLIT-SYSTEM IS POWERED FROM OUTDOOR UNIT. PROVIDE ELECTRICAL CONNECTION BETWEEN UNITS PER MANUFACTURER REQUIREMENTS. COORDINATE ALL ELECTRICAL REQUIREMENTS, FINAL UNIT LOCATIONS, AND CIRCUIT ROUTING WITH MECHANICAL CONTRACTOR PRIOR TO ROUGH-IN.
14. PROVIDE FINAL CONNECTIONS TO HHW-1 AND RELATED EQUIPMENT INCLUDING RECIRCULATION PUMP, MALFUNCTION INDICATOR LIGHTS, AQUASTATS, AND TIME SWITCH FURNISHED BY PLUMBING CONTRACTOR. SEE DETAIL 3/E501 FOR ADDITIONAL INFORMATION.
15. PROVIDE SIMPLEX RECEPTACLE IN WEATHERPROOF CAST ALUMINUM BOX FOR WALK-IN FREEZER CONDENSATE PIPING HEAT TAPE. COORDINATE EXACT LOCATION WITH PLUMBING CONTRACTOR PRIOR TO ROUGH-IN.
16. PROVIDE LOW VOLTAGE TRANSFORMER AND BELL ABOVE DOOR. SEE DETAIL 4/E501 FOR ADDITIONAL INFORMATION.
17. PROVIDE A GFCI DUPLEX RECEPTACLE MOUNTED BELOW COUNTERTOP FOR CONNECTION OF AUTOMATIC FAUCET SENSOR. ENSURE PLUMBING PIPING WILL NOT INTERFERE WITH MOUNTING LOCATION AND COORDINATE ALL REQUIREMENTS WITH PLUMBING CONTRACTOR PRIOR TO ROUGH-IN.
18. PROVIDE FINAL CONNECTION TO AUTOMATIC FLUSH VALVE. COORDINATE EXACT TRANSFORMER MOUNTING LOCATION AND ALL REQUIREMENTS WITH PLUMBING CONTRACTOR PRIOR TO ROUGH-IN.
19. INTERLOCK GAS SOLENOID VALVE WITH GREASE HOOD FIRE SUPPRESSION SYSTEM SUCH THAT GAS SOLENOID VALVE CLOSES UPON GREASE HOOD FIRE SUPPRESSION SYSTEM DISCHARGE. COORDINATE ALL REQUIREMENTS WITH PLUMBING CONTRACTOR AND GREASE HOOD FIRE SUPPRESSION SYSTEM MANUFACTURER PRIOR TO ROUGH-IN.
20. CONNECT CIRCUIT VIA LOAD CONTROLLER(S) LOCATED IN MANAGER'S OFFICE. LOWERCASE LETTERS ADJACENT TO FIXTURES INDICATE CORRESPONDING LOAD CONTROLLER. SEE 2/E120 FOR ADDITIONAL INFORMATION. SEE LUTRON ONE-LINE DIAGRAMS SHEETS E621, E622 FOR CONTROL CONFIGURATION.
21. PROVIDE INFRATECH #30-4048 4-ZONE ANALOG CONTROLLER AND RELAY CONTROL PANEL FOR CONTROL OF PATIO UNIT HEATERS. VERIFY EXACT LOCATION WITH OWNER/ARCHITECT PRIOR TO ROUGH-IN. VERIFY EXACT ELECTRICAL REQUIREMENTS WITH MANUFACTURER PRIOR TO ROUGH-IN. VERIFY EXACT ZONING WITH CONSTRUCTION MANAGER PRIOR TO ROUGH-IN.
22. DEVICES TO BE CIRCUITED THROUGH JUNCTION BOX STUBOUT OF WALL FOR CIRCUITS. SEE EQUIPMENT #130 IN KITCHEN DRAWINGS AND KITCHEN EQUIPMENT SCHEDULE FOR ADDITIONAL INFORMATION. SEE KITCHEN DRAWINGS FOR FINAL LOCATION OF INDIVIDUAL DEVICES.
23. CONTROLLED VIA HEATER CONTROLLER/RELAY CONTROL PANEL. SEE NOTE 21 FOR ADDITIONAL INFORMATION. COORDINATE ALL CONNECTIONS WITH MANUFACTURER.
24. PROVIDE 4" OCTAGONAL JUNCTION BOX WITH SCREW THREADS SET AT THE 2 AND 8 O'CLOCK POSITIONS FOR THE GREASE HOOD FIRE SUPPRESSION SYSTEM PULL STATION. PROVIDE A 1/2" CONDUIT FROM THE JUNCTION BOX TO 6" ABOVE THE ACCESSIBLE CEILING AND TERMINATE WITH A CONDUIT BUSHING. COORDINATE EXACT LOCATION WITH THE GREASE HOOD FIRE SUPPRESSION SYSTEM INSTALLER AND THE FIRE MARSHAL PRIOR TO ROUGH-IN.
25. PROVIDE RELAY AND FINAL CONNECTION TO MOTORIZED DAMPER (MD). INTERLOCK RELAY WITH SUPPLY FAN IN HVAC EQUIPMENT ASSOCIATED WITH EQUIPMENT SUCH THAT MOTORIZED DAMPER OPENS WHEN SUPPLY FAN STARTS. PROVIDE LOW VOLTAGE TRANSFORMER IF REQUIRED. COORDINATE ALL REQUIREMENTS WITH MECHANICAL CONTRACTOR PRIOR TO ROUGH-IN.
1 26. PROVIDE RECEPTACLE FOR CO2 MONITORING SYSTEM. VERIFY LOCATION AND EXACT ELECTRICAL REQUIREMENTS WITH EQUIPMENT MANUFACTURER PRIOR TO ROUGH-IN.

NOTE:
E## REFER TO KITCHEN EQUIPMENT ELECTRICAL ROUGH-IN PLAN, SHEET KE101, FOR DIMENSIONED ROUGH-IN LOCATIONS, MOUNTING HEIGHTS, AND ADDITIONAL REQUIREMENTS FOR ALL DEVICE TAGS SHOWN ON THIS SHEET, INCLUDING EQUIPMENT POWER AND LOW VOLTAGE OUTLET LOCATIONS.

Bergmeyer
LA - 800 South Figueroa St. #1100 Los Angeles, CA 90017 212.337.1090
BOS - 51 Sleeper St. #200 Boston, MA 02210 617.542.1025
www.bergmeyer.com

CONSULTANTS:
Schnackel engineers
800-581-0963
www.schnackel.com
SE JOB# 200363

SEAL/ SIGNATURE:
STATE OF MISSOURI
GREGORY ROY SCHNACKEL
NUMBER E-28570
Date: 03/05/21
COA #: E-2009006642

| NO. | BY | DATE | DESCRIPTION |
|---|---|---|---|
| 1 | | 2021-03-09 | ADDENDUM #1 |
| | | 2021-01-11 | PERMIT/BID SET |
| | | 2020-12-21 | 75% SET |
| | | 2020-10-12 | DD SET |

SHAKE SHACK

SHAKE SHACK - LEE'S SUMMIT MO

LEE'S SUMMIT
MISSOURI
SHACK #1348

PERMIT/BID SET

ELECTRICAL POWER PLAN

| | |
|---|---|
| DRAWN BY: | AEH |
| CHECKED BY: | GRS |
| JOB NO: | 20068.00 |

E101

RELEASE FOR CONSTRUCTION
AS NOTED ON PLANS REVIEW
DEVELOPMENT SERVICES
LEE'S SUMMIT, MISSOURI
03/10/2021

| LOW VOLTAGE DEVICE COLOR SCHEDULE | | |
|---|---|---|
| AREA | CAMERAS | SPEAKERS |
| BACK OF HOUSE/KITCHEN (WHITE CEILING) | WHITE | WHITE |
| FRONT OF HOUSE/DINING (LIGHT CEILING) | WHITE | WHITE |
| EXTERIOR/PATIO | BLACK | BLACK |

GENERAL NOTE:
A. EXPOSED LOW VOLTAGE CABLING SHALL MATCH THE DEVICE COLORS SPECIFIED ABOVE.

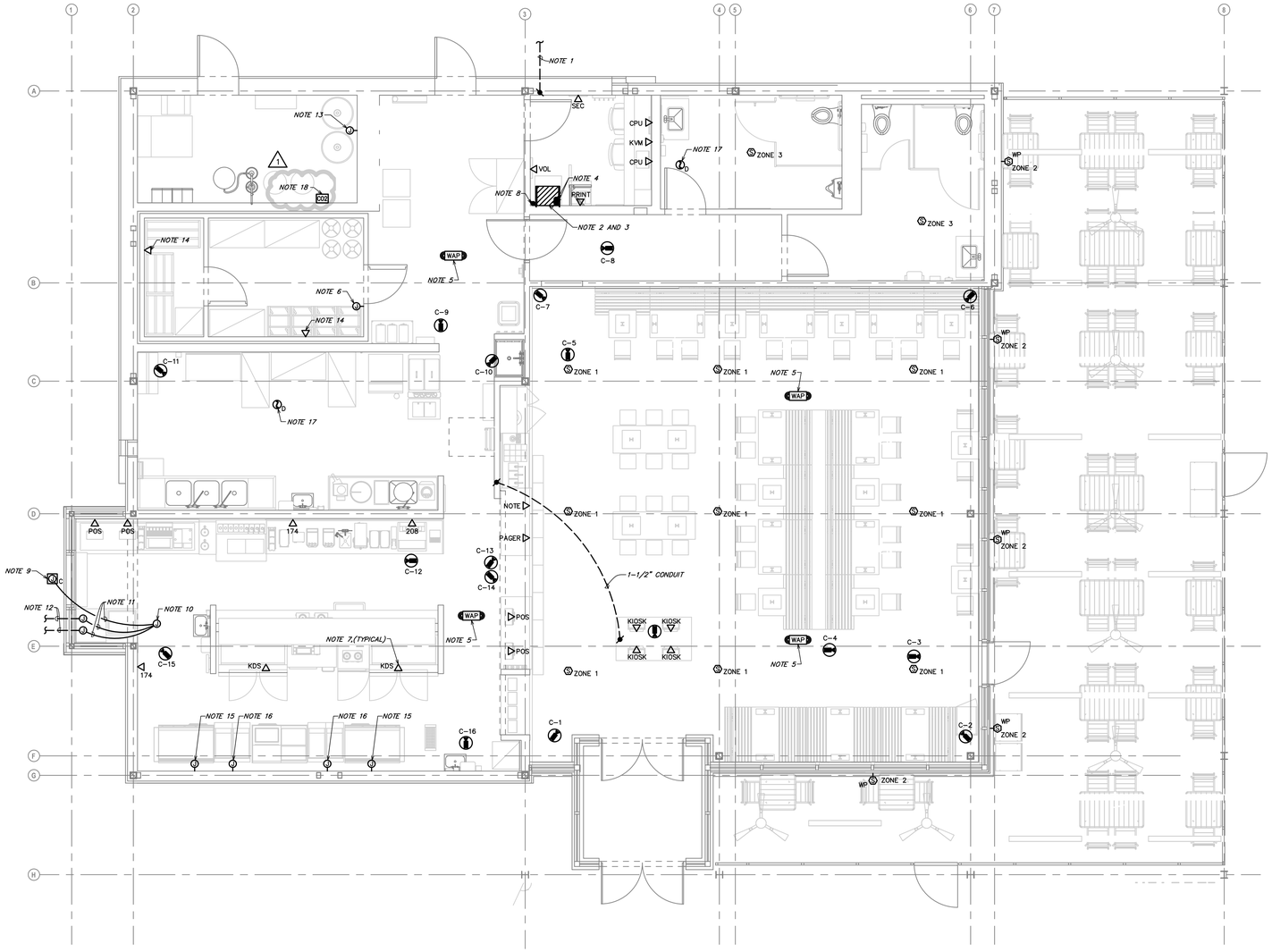


1 LOW VOLTAGE SYSTEMS PLAN
SCALE: 1/4" = 1'-0"

GENERAL ELECTRICAL NOTES:
A. WHERE THE MECHANICAL DESIGN UTILIZES A PLENUM RETURN AIR CEILING DESIGN, ALL EQUIPMENT AND MATERIALS INSTALLED WITHIN THE PLENUM RETURN CEILING MUST MEET THE FLAME SPREAD AND SMOKE DEVELOPED RATINGS OF 25/50 AND BE APPROVED FOR USE IN PLENUM RETURN CEILINGS. COORDINATE PLENUM CEILING LOCATIONS WITH THE MECHANICAL CONTRACTOR.
B. COORDINATE ALL DEVICE LOCATIONS AND CIRCUIT ROUTING WITHIN ANY MILLWORK WITH MILLWORK VENDOR PRIOR TO ROUGH-IN.
C. COORDINATE THE CONNECTIONS OF ALL EQUIPMENT PROVIDED BY OTHERS WITH THE CONTRACTOR PROVIDING THE EQUIPMENT PRIOR TO ROUGH-IN. THIS INCLUDES, BUT IS NOT LIMITED TO, MECHANICAL EQUIPMENT, KITCHEN EQUIPMENT, AUDIO/VISUAL EQUIPMENT, FIRE SUPPRESSION SYSTEM EQUIPMENT, FIRE ALARM EQUIPMENT, ETC. PROVIDE THE APPROPRIATE DISCONNECTING MEANS FOR, AND TO MAKE THE FINAL CONNECTION TO, ANY HARDWIRED EQUIPMENT. THE ELECTRICAL CONTRACTOR IS ALSO RESPONSIBLE TO PROVIDE AN APPROPRIATE CORD AND PLUG FOR ANY CORD-AND-PLUG CONNECTED EQUIPMENT THAT IS NOT EQUIPPED WITH AN INTERNAL CORD AND PLUG.
D. ALL EQUIPMENT, DEVICES, AND LUMINAIRES SHALL BE SUITABLE FOR THE ENVIRONMENT IN WHICH THEY ARE INSTALLED. EQUIPMENT MOUNTED OUTDOORS SHALL BE NEMA 3R. DEVICES MOUNTED IN DAMP OR WET LOCATIONS SHALL BE WEATHERPROOF. RECEPTACLES RATED 15- OR 20-AMPS AND 120 VOLTS WHICH ARE LOCATED IN DAMP OR WET LOCATIONS SHALL BE GFCI PROTECTED AND EQUIPPED WITH A SUITABLE WEATHERPROOF COVERPLATE (WHILE-IN-USE IN WET LOCATIONS).
E. REFER TO ARCHITECTURAL PLAN FOR RESPONSIBILITY SCHEDULE.
F. ALL SPEAKER WIRE TO BE 16-GAUGE AWG. CABLE SHOULD NOT BE IN CONDUIT UNLESS REQUIRED BY CODE.
G. ALL DATA CABLES TO BE HOME RUNS FROM THE DEVICE TO THE MANAGER'S OFFICE WITH THE EXCEPTION OF SPEAKERS THAT SHOULD BE DAISY-CHAINED TOGETHER AS SHOWN ON THE PLAN.
H. PROVIDE SERVICE LOOPS SPOOLED AND HUNG NEATLY AT BOTH ENDS OF EACH CABLE 3'-0" AT THE FINAL DEVICE HEIGHT AND 5'-0" AT THE IT RACK, UNLESS NOTED OTHERWISE.
I. ALL LOW VOLTAGE CABLES TO BE TAGGED AND CLEARLY LABELED ON BOTH ENDS WITH A P-TOUCH OR OTHER PRINTED LABEL.
J. PROVIDE (1) 3/4" SLEEVE FOR EACH EXTERIOR DEVICE TO INSIDE OF SPACE.
K. PROVIDE ALL EMPTY CONDUITS WITH PULL STRINGS.
L. PROVIDE ALL-THREAD AT EACH CAMERA LOCATION SHOWN ON PLAN FROM CEILING DECK TO 1'-0" BELOW LIGHT TRACK HEIGHT. (REFER TO ARCHITECTURAL PLANS FOR LIGHT TRACK HEIGHT). AT CAMERA LOCATIONS, PROVIDE (1) 4" ROUND/OCTAGON JUNCTION BOX ATTACHED TO BOTTOM OF ALL-THREAD.

KEYED NOTES:
1. EXTEND 2" CONDUIT WITH PULL STRING, TO MANAGER'S OFFICE FOR TELECOMMUNICATIONS SERVICE. EXTEND 2" CONDUIT WITH PULL STRING, TO MANAGER'S OFFICE FOR CABLE TELEVISION SERVICE. REFERENCE E100 FOR EXTENSION.
2. PROVIDE TELEPHONE 66 BLOCK FOR NEW TENANT SERIVCE MOUNTED IN THE MANAGER'S OFFICE NEAR THE IT RACK. LEVITON #40066 SERIES, WHITE WITH ORANGE COVER OR EQUIVALENT. SEE 2/E501 FOR GROUNDING DETAIL.
3. PROVIDE, INSTALL, AND TERMINATE 25-PAIR CABLE AT BOTH ENDS, INCLUDING AT THE 66 BLOCK IN THE MANAGER'S OFFICE. TESTED AND VERIFY.
4. PROVIDE (2) 3" CONDUITS ABOVE THE IT RACK TO ABOVE THE CEILING FOR CABLE MANAGEMENT. ROUTE ALL DATA CABLES THROUGH ONE OF THE 3" CONDUITS AND ALL OTHER CABLES THROUGH THE OTHER 3" CONDUITS. PROVIDE SLEEVES THROUGH WALL ABOVE CEILINGS AT FULL HEIGHT WALLS.
5. PROVIDE DATA OUTLET FLUSH IN CEILING FOR WIRELESS ACCESS POINT. REFER TO PLANS FOR LOCATION.
6. PROVIDE JUNCTION BOX SURFACE MOUNTED INSIDE THE WALK-IN COOLER AT 6' AFF FOR ALARM PANIC BUTTON. ROUTE 3/4" EMT WITH PULL-WIRE TO ABOVE CEILING IN THE MANAGER'S OFFICE FOR ALARM CABLING BY OTHERS.
7. ROUTE DATA CABLES FOR CHEF'S COUNTER DOWN FULL HEIGHT CHASE WALL. COORDINATE LOCATIONS OF DATA OUTLETS AT CHEF'S COUNTER WITH KITCHEN EQUIPMENT AND PULL CABLES THROUGH CHEF'S COUNTER TO FINAL LOCATION.
8. PROVIDE (1) 1" EMT CONDUIT FROM ABOVE THE IT RACK FOR SATELLITE DISH, IF REQUIRED. VERIFY WITH SHACK SHARE IF REQUIRED.
9. PROVIDE BANNER ENGINEERING CORP. T30R SERIES RADAR SENSOR, MODEL T30-R-1515-KOO FOR DRIVE-THRU VEHICLE SENSING. VERIFY EXACT LOCATION WITH OWNER/ARCHITECT PRIOR TO ROUGH-IN. VERIFY EXACT REQUIREMENTS WITH MANUFACTURER PRIOR TO ROUGH-IN.
10. PROVIDE BANNER ENGINEERING CORP TL70 SERIES MODULAR LIGHT TOWER BASE, COLOR, AND ALARM SEGMENTS FOR DRIVE-THRU SENSING NOTIFICATION. BASE MODEL B-TL70-QS. COLOR AND ALARM SEGMENTS MODEL SC-TL70. VERIFY COLOR AND ALARM SEGMENT OPTIONS WITH OWER/ARCHITECT. VERIFY EXACT REQUIREMENTS WITH MANUFACTURER PRIOR TO ROUGH-IN.
11. PROVIDE INTERCONNECTION BETWEEN SENSOR AND NOTIFICATION LIGHT TOWER PER MANUFACTURER RECOMMENDATIONS. VERIFY EXACT REQUIREMENTS WITH MANUFACTURER PRIOR TO ROUGH-IN.
12. PROVIDE (1) 2" CONDUIT WITH PULL STRING FOR LOW VOLTAGE DATA CABLING TO EXTERIOR ORDERING MENUBOARDS.
13. PROVIDE CONDUIT, AS NECESSARY, AT ANY CONCEALED LOCATIONS FOR RTI SIGNAL CABLE FROM RTI FILL BOX LOCATION TO RTI SYSTEM LOCATION. SEE DETAIL 6/E501 FOR ADDITIONAL INFORMATION. VERIFY EXACT REQUIREMENTS WITH EQUIPMENT MANUFACTURER PRIOR TO ROUGH-IN.
14. PROVIDE DATA PORT FOR WALK-IN EVAPORATOR. VERIFY EXACT REQUIREMENTS WITH EQUIPMENT MANUFACTURER PRIOR TO ROUGH-IN.
15. PROVIDE LOW VOLTAGE WIRING IN MC CABLE TO SINGLE GANG BOX AT THIS POINT FOR RTI CONNECTION TO GRIDDLE. SEE DETAILS 6 AND 7/E501 FOR ADDITIONAL INFORMATION.
16. PROVIDE LOW VOLTAGE WIRING IN MC CABLE TO SINGLE GANG BOX AT THIS POINT FOR RTI CONNECTION TO FRYER. SEE DETAILS 6 AND 8/E501 FOR ADDITIONAL INFORMATION.
17. FURNISH DUCT SMOKE DETECTOR AND RELAY FOR HVAC UNIT SUPPLY FAN SHUTDOWN. FOR INSTALLATION BY THE MECHANICAL CONTRACTOR. DUCT SMOKE DETECTOR SHALL BE SYSTEM SENSOR #DH100 OR EQUAL. PROVIDE 120 VOLT WIRING TO THE DUCT SMOKE DETECTOR AND CONNECT TO SPARE 20 AMP, 1 POLE CIRCUIT BREAKER WITH HANDLE LOCK-ON ACCESSORY. ALSO PROVIDE A SYSTEM SENSOR #RTS2-ACS, OR EQUAL, REMOTE TEST STATION / MULTI-SIGNALING ACCESSORY. INSTALL MULTI-SIGNALING ACCESSORY IN A CONTINUOUSLY ATTENDED LOCATION. TO BE COORDINATED WITH THE AUTHORITY HAVING JURISDICTION AND OWNER PRIOR TO ROUGH-IN. PROVIDE ALL FINAL WIRING FOR A COMPLETE AND FUNCTIONAL SYSTEM.
18. PROVIDE ANALOX #ASO 202 MONITORING SYSTEM. VERIFY EXACT REQUIREMENTS WITH EQUIPMENT MANUFACTURER PRIOR TO ROUGH-IN.

| LOW VOLTAGE OUTLET LEGEND | | | | | |
|---|---|---|---|---|---|
| SYMBOL TYPE | CABLE REQUIREMENTS | | | ADDITIONAL INFORMATION | NOTES |
| | QTY | TYPE | ORIGIN | | |
| 174 | 2 | CAT 5E | IT RACK | 60" A.F.F. FOR ITEM #174 KDS | 1 |
| 208 | 2 | CAT 5E | IT RACK | 60" A.F.F. FOR ITEM #208 KDS | 1 |
| KDS | 2 | CAT 5E | IT RACK | IN OVERSHELF FOR KDS SYSTEM | 2 |
| KVM | 2 | CAT 5E | IT RACK | 42" A.F.F. FOR KVM SWITCH | 3 |
| KIOSK | 2 | CAT 5E | IT RACK | 26" A.F.F. FOR KIOSK | 3 |
| PAGER | 2 | CAT 5E | IT RACK | 26" A.F.F. FOR PAGER SYTEM | 2 |
| POS | 4 | CAT 5E | IT RACK | 26" A.F.F. FOR POS TERMINAL | 2 |
| PRINTER | 2 | CAT 5E | IT RACK | 48" A.F.F. FOR PRINTER ON SAFE | 3 |
| VOL | 1 | CAT 5E | IT RACK | 48" A.F.F. FOR VOLUME CONTROL | 3 |
| CPU | 4 | CAT 5E | IT RACK | 18" A.F.F. FOR WORKSTATION | 3 |
| SEC | 1 | CAT 5E | IT RACK | 72" A.F.F. FOR SECURITY ALARM PANEL | 3 |
| WAP | 2 | CAT 5E | IT RACK | AT CEILING FOR WIRELESS | 5 |
| NOTE | 2 | CAT 5E | IT RACK | NOTIFICATION BOARD | 3 |

GENERAL NOTES:
A. PROVIDE 4" SQUARE BOX WITH SINGLE GANG PLASTER RING AND 3/4" EMT TO ACCESSIBLE CEILING AREA FOR ALL LOW VOLTAGE WALL OUTLETS UNO.
B. PROVIDE 4" OCTAGON BOX FOR ALL LOW VOTLAGE CEILING OUTLETS UNO.

SCHEDULE NOTES:
1. REFER TO KITCHEN EQUIPMENT ROUGH-IN PLANS FOR EXACT LOCATION AND MOUNTING HEIGHTS OF LOW VOLTAGE OUTLETS FOR KITCHEN DATA SYSTEM.
2. LOW VOLTAGE OUTLET TO BE INSTALLED IN KITCHEN OVERSHELF ABOVE CHEF'S COUNTER. REFER TO KEC SHOP DRAWINGS FOR OUTLET LOCATIONS. PROVIDE 15' OF EXCESS CABLE AT FOR ALL DATA OUTLETS IN OVERSHELF.
3. REFER TO ARCHITECTURAL INTERIOR ELEVATIONS FOR EXACT LOCATIONS AND MOUNTING HEIGHTS OF LOW VOLTAGE OUTLETS FOR OFFICE EQUIPMENT AND TELEVISIONS.
4. PROVIDE DATA OUTLET FOR WIRELESS ACCESS POINT AT SAME ELEVATION AS LIGHTING FIXTURES.

| CAMERA WIRING LEGEND | | | | |
|---|---|---|---|---|
| SYMBOL TYPE | CABLE REQUIREMENTS | | | ADDITIONAL INFORMATION |
| | QTY | TYPE | ORIGIN | |
| | 1 | CAT 5E | IT RACK | |

GENERAL NOTES:
A. VERIFY FINAL LOCATIONS AND AIMING OF ALL CAMERAS WITH TENANT.
B. PROVIDE SERVICE LOOPS SPOOLED AND HUNG NEATLY AT BOTH ENDS OF EACH CABLE. 15'-0" AT CAMERA LOCATIONS AND 5'-0" AT THE IT RACK.
C. SUSPENDED INTERIOR CAMERAS TO 10'-0" A.F.F. IN AREAS OPEN TO STRUCTURE.
D. INSTALL EXTERIOR CAMERAS AT 11'-0" A.F.F. UNLESS NOTED OTHERWISE.
E. PROVIDE WP JUNCTION BOX WITH 3/4" CONDUIT STUBBED INTO TENANT SPACE FOR ALL EXTERIOR CAMERAS.


Bergmeyer
LA - 800 South Figueroa St. Suite 1100 Los Angeles, CA 90017 212.337.1090
BOS - 51 Sleeper St. 4th Floor Boston, MA 02210 617.542.1025
www.bergmeyer.com

CONSULTANTS:
Schnackel engineers
800-581-0963
www.schnackel.com
SE JOB# 200363


SEAL/ SIGNATURE:
STATE OF MISSOURI
GREGORY ROY SCHNACKEL
NUMBER E-28570
Date: 03/05/21
COA #: E-2009006642

| NO. | BY | DATE | DESCRIPTION |
|---|---|---|---|
| 1 | | 2021-03-09 | ADDENDUM #1 |
| | | 2021-01-11 | PERMIT/BID SET |
| | | 2020-12-21 | 75% SET |
| | | 2020-10-12 | DD SET |

SHAKE SHACK

SHAKE SHACK - LEE'S SUMMIT MO

LEE'S SUMMIT
MISSOURI
SHACK #1348

PERMIT/BID SET

LOW VOLTAGE SYSTEMS PLAN

DRAWN BY: AEH
CHECKED BY: GRS
JOB NO: 20068.00

E102

RELEASE FOR CONSTRUCTION
AS NOTED ON PLANS REVIEW
DEVELOPMENT SERVICES
LEE'S SUMMIT, MISSOURI
03/10/2021

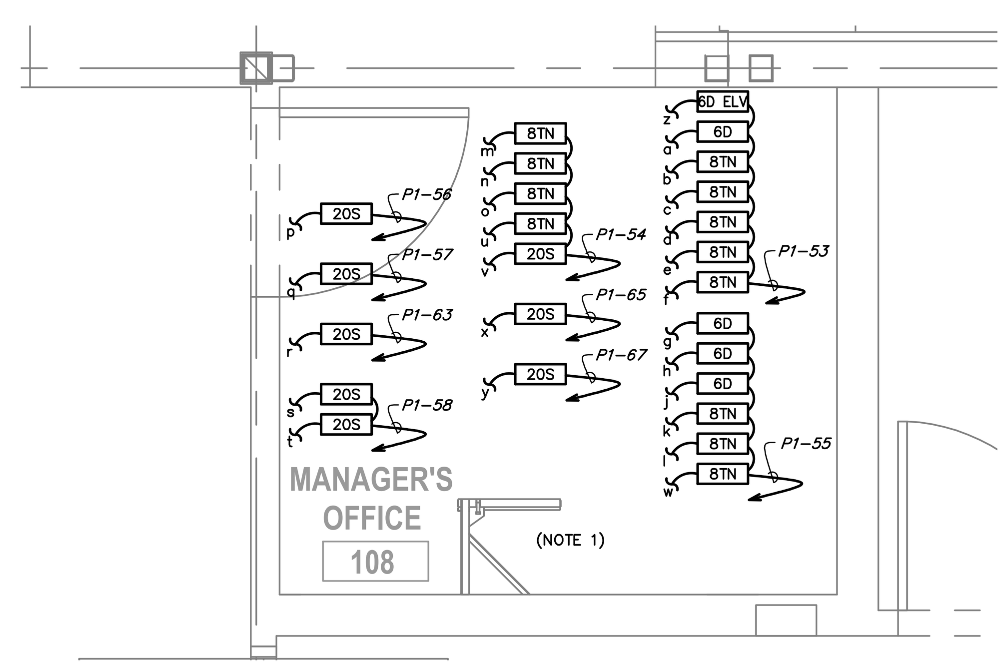


2 ENLARGED ELECTRICAL LIGHTING PLAN - LOAD CONTROLLERS
SCALE: 1/2" = 1'-0"

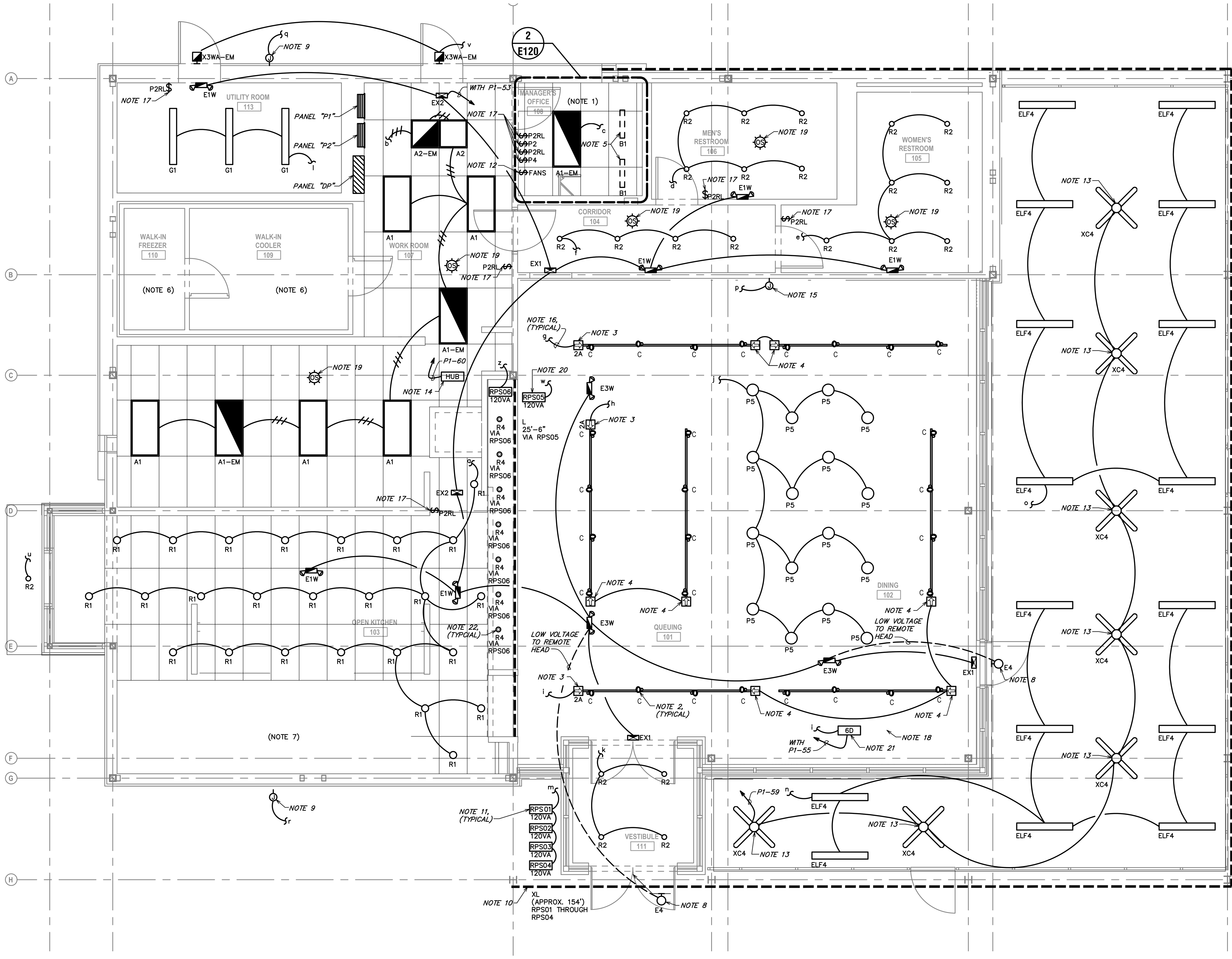


1 ELECTRICAL LIGHTING PLAN
SCALE: 1/4" = 1'-0"

**GENERAL ELECTRICAL NOTES:**

A. WHERE THE MECHANICAL DESIGN UTILIZES A PLENUM RETURN AIR CEILING DESIGN, ALL EQUIPMENT AND MATERIALS INSTALLED WITHIN THE PLENUM RETURN CEILING MUST MEET THE FLAME SPREAD AND SMOKE DEVELOPED RATINGS OF 25/50 AND BE APPROVED FOR USE IN PLENUM RETURN CEILINGS. COORDINATE PLENUM CEILING LOCATIONS WITH THE MECHANICAL CONTRACTOR. LUMINAIRES THAT ARE MANUFACTURED WITH A METAL HOUSING MEET THIS REQUIREMENT AND ARE NOT REQUIRED TO BE PLENUM RATED UNLESS INDICATED OTHERWISE.
B. COORDINATE ALL DEVICE LOCATIONS AND CIRCUIT ROUTING WITHIN ANY MILLWORK WITH MILLWORK VENDOR PRIOR TO ROUGH-IN.
C. COORDINATE THE CONNECTIONS OF ALL EQUIPMENT PROVIDED BY OTHERS WITH THE CONTRACTOR PROVIDING THE EQUIPMENT PRIOR TO ROUGH-IN. THIS INCLUDES, BUT IS NOT LIMITED TO, MECHANICAL EQUIPMENT, KITCHEN EQUIPMENT, AUDIO/VISUAL EQUIPMENT, FIRE SUPPRESSION SYSTEM EQUIPMENT, FIRE ALARM EQUIPMENT, ETC. PROVIDE THE APPROPRIATE DISCONNECTING MEANS FOR, AND TO MAKE THE FINAL CONNECTION TO, ANY HARDWIRED EQUIPMENT. THE ELECTRICAL CONTRACTOR IS ALSO RESPONSIBLE TO PROVIDE AN APPROPRIATE CORD AND PLUG FOR ANY CORD-AND-PLUG CONNECTED EQUIPMENT THAT IS NOT EQUIPPED WITH AN INTEGRAL CORD AND PLUG.
D. SEE PANEL SCHEDULES FOR INFORMATION ON CIRCUITS THAT ARE TO BE ROUTED THROUGH CONTACTORS OR RELAYS FOR CONTROL.
E. ALL EQUIPMENT, DEVICES, AND LUMINAIRES SHALL BE SUITABLE FOR THE ENVIRONMENT IN WHICH THEY ARE INSTALLED. EQUIPMENT MOUNTED OUTDOORS SHALL BE NEMA 3R. DEVICES MOUNTED IN DAMP OR WET LOCATIONS SHALL BE WEATHERPROOF. RECEPTACLES RATED 15- OR 20-AMPS AND 120 VOLTS WHICH ARE LOCATED IN DAMP OR WET LOCATIONS SHALL BE GFCI PROTECTED AND EQUIPPED WITH A SUITABLE WEATHERPROOF COVERPLATE (WHILE-IN-USE IN WET LOCATIONS).
F. ALL LUGS, TERMINALS, ETC. IN ELECTRICAL DISTRIBUTION EQUIPMENT SHALL BE LISTED FOR A MINIMUM OF 75 DEGREE C CONDUCTORS. TERMINATIONS LISTED FOR ONLY 60 DEGREE C CONDUCTORS ARE NOT PERMITTED.
G. CIRCUITS SERVING EMERGENCY LIGHTING EQUIPMENT SUCH AS EMERGENCY BATTERIES SHALL NOT SHARE A NEUTRAL (SHALL NOT BE PART OF A MULTIWIRE BRANCH CIRCUIT) WITH ANY OTHER CIRCUIT. PROVIDE A SEPARATE NEUTRAL FOR EVERY CIRCUIT THAT SERVES EMERGENCY LIGHTING EQUIPMENT.
H. ALTHOUGH NOT SPECIFICALLY SHOWN, THE ELECTRICAL CONTRACTOR SHALL PROVIDE ALL REQUIRED LOW VOLTAGE WIRING AND DATA CABLING, PER THE MANUFACTURER'S RECOMMENDATIONS, FOR A COMPLETE, FUNCTIONAL LIGHTING CONTROL SYSTEM.
I. ALTHOUGH NOT SPECIFICALLY SHOWN, THE ELECTRICAL CONTRACTOR SHALL PROVIDE ALL REQUIRED WIRING AND DATA CABLING, INCLUDING ALL 0-10V CONTROL WIRING WHERE APPLICABLE, PER THE MANUFACTURER'S RECOMMENDATIONS FOR A COMPLETE, FUNCTIONAL DIMMING SYSTEM.
J. REFER TO LIGHTING CONTROL DEVICE SCHEDULE ON SHEET E620 FOR OCCUPANCY SENSOR TYPES AND CONTROL INFORMATION.
K. REFER TO LUMINAIRE SCHEDULE ON SHEET E620 FOR LIGHT FIXTURE TYPES AND REQUIREMENTS.
L. REFER TO ARCHITECTURAL DRAWINGS AND ELEVATIONS FOR EXACT LOCATIONS AND MOUNTING HEIGHTS OF ALL LIGHT FIXTURES. COORDINATE DIMMER/SWITCH BANK LOCATION SWITH ARCHITECT PRIOR TO ROUGH-IN.
M. PROVIDE AIMING OF ALL ADJUSTABLE LIGHT FIXTURES AFTER SETUP IS COMPLETE TO EVENLY ILLUMINATE TABLE SURFACES, SIGNAGE, DECOR, AND EMERGENCY EGRESS PATHS. COORDINATE AIMING OF NORMAL FIXTURES WITH ARCHITECT. REFER TO ARCHITECTURAL EGRESS PATH PLAN FOR AIMING OF EMERGENCY LIGHT FIXTURES.

**KEYED NOTES:**

1. ALL LOAD CONTROLLERS TO BE INSTALLED IN THIS AREA, ABOVE CEILING HEIGHT, UNLESS OTHERWISE NOTED.
2. AIM ALL TRACK HEADS TO TABLE SURFACES UNLESS INDICATED OTHERWISE.
3. PROVIDE LIGHTING TRACK POWER END FEED CURRENT LIMITER DEVICE WITH RATING AS SHOWN. REFER TO LUMINAIRE SCHEDULE, SHEET E620 FOR COMPLETE MODEL NUMBER.
4. PROVIDE LIGHTING TRACK POWER END FEEDS WITH APPROPRIATE POLARITY TO CONNECT NON-ADJOINING TRACK LIGHTING SECTIONS AS SHOWN.
5. PROVIDE UNDER CABINET LIGHT FIXTURES WITH CORD AND PLUG CONNECTIONS. REFER TO POWER PLANS FOR RECEPTACLE LOCATIONS.
6. INSTALL LIGHT FIXTURES SHIPPED LOOSE WITH WALK-IN COOLER. REFER TO POWER PLANS FOR CIRCUIT CONTINUATION.
7. LIGHT FIXTURES FURNISHED WITH EXHAUST HOOD. EQUIPMENT MANUFACTURER SHALL BE RESPONSIBLE FOR PROVIDING SUFFICIENT ILLUMINATION TO COMPLY WITH LOCAL REQUIREMENTS. REFER TO CAPTIVE AIRE WIRING DIAGRAMS FOR CONNECTION INFORMATION AND PROVIDE FINAL CONNECTION.
8. CONNECT EXTERIOR EMERGENCY LIGHTING REMOTE HEADS TO INTERIOR EMERGENCY LIGHTING BATTERY UNIT INDICATED.
9. PROVIDE WEATHERPROOF JUNCTION BOX, DISCONNECT SWITCH AND RELATED CIRCUITRY AT ROOF PARAPET OR OTHER ACCESSIBLE LOCATION AS DIRECTED BY OWNER, FOR CONNECTION OF STOREFRONT SIGNAGE. COORDINATE REQUIREMENTS WITH OWNER AND SIGN INSTALLER PRIOR TO ROUGH-IN AND ADJUST ELECTRICAL PROVISIONS AS NECESSARY. PROVIDE CONCEALED CONDUIT THROUGH WALL FOR CONNECTION TO SIGN AND CONCEAL CONDUIT FROM CUSTOMER VIEW.
10. PROVIDE LINEAR LED TAPE LIGHTING AT SIGN BAND. INSTALL LED TAPE LIGHTING IN PROTECTIVE ALUMINUM CHANNEL AND END TO END FOR CONTINUOUS ILLUMINATION BUT WIRE EACH STRIP SEPARATELY TO DRIVER PER MANUFACTURER'S INSTALLATION INSTRUCTIONS. REFER TO SIGNAGE PACKAGE FOR INSTALLATION DETAILS. WIRING OF LINEAR LED TAPE LIGHTING SHALL OCCUR AFTER SIGN BAND LETTERS AND BACKER PLATE ARE INSTALLED. PROVIDE END FEED CABLES AND ALL REQUIRED CONNECTORS AND SECURE ALL CABLING CONCEALED FROM VIEW.
11. PROVIDE REMOTE LED DRIVER FOR LINEAR LED LIGHTING. CONNECT EACH LENGTH OF LED STRIP IN PARALLEL TO REMOTE DRIVER PER MANUFACTURER'S INSTALLATION INSTRUCTIONS. PROVIDE ALL REQUIRED CONNECTORS AND SECURE ALL LOW VOLTAGE CABLING CONCEALED FROM VIEW. PROVIDE WATERPROOF ENCLOSURES FOR LED DRIVERS INSTALLED OUTSIDE AND COORDINATE EXACT LOCATIONS OF LED LIGHTING CHANNEL AND REMOTE DRIVERS WITH ARCHITECT.
12. PROVIDE MANUFACTURER CEILING FAN SPEED CONTROL SWITCH FOR EXTERIOR PATIO FANS. COORDINATE EXACT LOCATION WITH OWNER PRIOR TO ROUGH-IN.
13. PROVIDE EXTERIOR WET LOCATION CEILING FAN, SEE LIGHT FIXTURE SCHEDULE ON E620. COORDINATE EXACT LOCATIONS, MOUNTING DETAILS, AND CONDUIT ROUTING WITH OWNER PRIOR TO ROUGH-IN. INSTALL CONDUIT CONCEALED FROM VIEW AS MUCH AS PRACTICAL. ROUTE CIRCUIT THROUGH FAN SPEED SWITCH IN OFFICE FOR CONTROL.
14. LUTRON VIVE STARTER HUB. PROVIDE WITH FLUSH MOUNT ADAPTER, AND PROVIDE CONNECTION TO LOW VOLTAGE POWER SUPPLY. VERIFY EXACT ELECTRICAL REQUIREMENTS WITH EQUIPMENT MANUFACTURER PRIOR TO ROUGH-IN. VERIFY EXACT LOCATION WITH ARCHITECT PRIOR TO ROUGH-IN. SEE LIGHTING CONTROL DEVICE SCHEDULE ON SHEET E620 FOR ADDITIONAL INFORMATION. SEE LUTRON ONE-LINE DIAGRAMS SHEET E621 FOR CONTROL CONFIGURATION.
15. PROVIDE FINAL CONNECTION TO SIGNAGE. COORDINATE LOCATION AND ALL REQUIREMENTS WITH SIGN CONTRACTOR PRIOR TO ROUGH-IN. PROVIDE AN APPROPRIATE LOCAL DISCONNECTING MEANS MOUNTED IN AN ACCESSIBLE, INCONSPICUOUS LOCATION THAT IS WITHIN SIGHT OF THE SIGN. EACH SIGN CIRCUIT SHALL HAVE A SEPARATE NEUTRAL AND SEPARATE EQUIPMENT GROUNDING CONDUCTOR.
16. CONNECT CIRCUIT VIA LOAD CONTROLLER(S) LOCATED IN MANAGER'S OFFICE. LOWERCASE LETTERS ADJACENT TO FIXTURES INDICATE CORRESPONDING LOAD CONTROLLER. SEE 2/E120 FOR ADDITIONAL INFORMATION. SEE LUTRON ONE-LINE DIAGRAMS SHEETS E621, E622 FOR CONTROL CONFIGURATION.
17. LUTRON PICO WIRELESS CONTROL WALL STATION. PROVIDE LOW-VOLTAGE RING FOR WALL STATION LOCATIONS. ALL LOCAL WALL STATIONS ARE EXPECTED TO BE BATTERY POWERED WITH NO COPPER AND CONDUIT ROUGH IN. VERIFY EXACT LOCATION WITH ARCHITECT PRIOR TO ROUGH-IN. SEE LIGHTING CONTROL DEVICE SCHEDULE ON SHEET E620 FOR ADDITIONAL INFORMATION. SEE LUTRON ONE-LINE DIAGRAMS SHEETS E621, E622 FOR CONTROL CONFIGURATION.
18. WIRELESS CEILING MOUNT DAYLIGHT SENSOR. SEE LIGHTING CONTROL DEVICE SCHEDULE ON SHEET E620 FOR ADDITIONAL INFORMATION. SEE LUTRON ONE-LINE DIAGRAMS SHEETS E621, E622 FOR CONTROL CONFIGURATION.
19. WIRELESS CEILING OCCUPANCY SENSOR. SEE LIGHTING CONTROL DEVICE SCHEDULE ON SHEET E620 FOR ADDITIONAL INFORMATION. SEE LUTRON ONE-LINE DIAGRAMS SHEETS E621, E622 FOR CONTROL CONFIGURATION.
20. PROVIDE REMOTE LED DRIVER FOR LINEAR LED LIGHTING. CONNECT EACH LENGTH OF LED STRIP IN PARALLEL TO REMOTE DRIVE PER MANUFACTURER'S SPECIFICATIONS. PROVIDE ALL REQUIRED CONNECTORS AND SECURE ALL LOW VOLTAGE CABLING CONCEALED FROM VIEW. COORDINATE EXACT LOCATIONS OF LED LIGHTING CHANNEL AND REMOTE DRIVERS WITH ARCHITECT.
21. LOAD CONTROLLER(S) LOCATED ABOVE CEILING. SEE LUTRON ONE-LINE DIAGRAMS SHEETS E621, E622 FOR CONTROL CONFIGURATION.
22. INSTALL THIS LUMINAIRE'S REMOTE LOW VOLTAGE LIGHTING TRANSFORMER IN AN INCONSPICUOUS, ACCESSIBLE LOCATION AND PROVIDE FINAL CONNECTION TO LUMINAIRE. COORDINATE MOUNTING LOCATION OF REMOTE LOW VOLTAGE LIGHTING TRANSFORMER WITH OWNER PRIOR TO ROUGH-IN. THE LENGTH OF CONDUCTORS BETWEEN REMOTE LOW VOLTAGE LIGHTING TRANSFORMER AND ASSOCIATED LUMINAIRE SHALL NOT EXCEED MANUFACTURER'S RECOMMENDATIONS FOR MAXIMUM CONDUCTOR LENGTH.

Bergmeyer
BOS - 51 Sleeper St. 6th Floor Boston, MA 02210 617.542.1025
LA - 800 South Figueroa St. Suite 1080 Los Angeles, CA 90017 212.337.1090
www.bergmeyer.com

CONSULTANTS:
Schnackel engineers
800-581-0963
www.schnackel.com
SE JOB#: 200383

SEAL/ SIGNATURE:
STATE OF MISSOURI — GREGORY ROY SCHNACKEL — NUMBER E-026570 — REGISTERED PROFESSIONAL ENGINEER
Date: 03/05/21
COA #: E-2009006642

| NO. | BY | DATE | DESCRIPTION |
|---|---|---|---|
| 1 | | 2021-03-09 | ADDENDUM #1 |
| | | 2021-01-11 | PERMIT/BID SET |
| | | 2020-12-21 | 75% SET |
| | | 2020-10-12 | DD SET |

SHAKE SHACK

SHAKE SHACK - LEE'S SUMMIT MO

LEE'S SUMMIT
MISSOURI
SHACK #1348

PERMIT/BID SET

ELECTRICAL LIGHTING PLAN

DRAWN BY: AEH
CHECKED BY: GRS
JOB NO: 20068.00

E120

RELEASE FOR CONSTRUCTION
AS NOTED ON PLANS REVIEW
DEVELOPMENT SERVICES
LEE'S SUMMIT, MISSOURI
03/10/2021

**GENERAL ELECTRICAL NOTES:**

A. WHERE THE MECHANICAL DESIGN UTILIZES A PLENUM RETURN AIR CEILING DESIGN, ALL EQUIPMENT AND MATERIALS INSTALLED WITHIN THE PLENUM RETURN CEILING MUST MEET THE FLAME SPREAD AND SMOKE DEVELOPED RATINGS OF 25/50 AND BE APPROVED FOR USE IN PLENUM RETURN CEILINGS. COORDINATE PLENUM CEILING LOCATIONS WITH THE MECHANICAL CONTRACTOR.
B. COORDINATE ALL DEVICE LOCATIONS AND CIRCUIT ROUTING WITHIN ANY MILLWORK WITH MILLWORK VENDOR PRIOR TO ROUGH-IN.
C. COORDINATE THE CONNECTIONS OF ALL EQUIPMENT PROVIDED BY OTHERS WITH THE CONTRACTOR PROVIDING THE EQUIPMENT PRIOR TO ROUGH-IN. THIS INCLUDES, BUT IS NOT LIMITED TO, MECHANICAL EQUIPMENT, KITCHEN EQUIPMENT, AUDIO/VISUAL EQUIPMENT, FIRE SUPPRESSION SYSTEM EQUIPMENT, FIRE ALARM EQUIPMENT, ETC. PROVIDE THE APPROPRIATE DISCONNECTING MEANS FOR, AND TO MAKE THE FINAL CONNECTION TO, ANY HARDWIRED EQUIPMENT. THE ELECTRICAL CONTRACTOR IS ALSO RESPONSIBLE TO PROVIDE AN APPROPRIATE CORD AND PLUG FOR ANY CORD-AND-PLUG CONNECTED EQUIPMENT THAT IS NOT EQUIPPED WITH AN INTEGRAL CORD AND PLUG.
D. SEE PANEL SCHEDULES FOR INFORMATION ON CIRCUITS THAT ARE TO BE ROUTED THROUGH CONTACTORS OR RELAYS FOR CONTROL.
E. ALL EQUIPMENT, DEVICES, AND LUMINAIRES SHALL BE SUITABLE FOR THE ENVIRONMENT IN WHICH THEY ARE INSTALLED. EQUIPMENT MOUNTED OUTDOORS SHALL BE NEMA 3R. DEVICES MOUNTED IN DAMP OR WET LOCATIONS SHALL BE WEATHERPROOF. RECEPTACLES RATED 15- OR 20-AMPS AND 120 VOLTS WHICH ARE LOCATED IN DAMP OR WET LOCATIONS SHALL BE GFCI PROTECTED AND EQUIPPED WITH A SUITABLE WEATHERPROOF COVERPLATE (WHILE-IN-USE IN WET LOCATIONS).
F. ALL LUGS, TERMINALS, ETC. IN ELECTRICAL DISTRIBUTION EQUIPMENT SHALL BE LISTED FOR A MINIMUM OF 75 DEGREE C CONDUCTORS. TERMINATIONS LISTED FOR ONLY 60 DEGREE C CONDUCTORS ARE NOT PERMITTED.

**KEYED NOTES:**

1. DISCONNECT SWITCH IS PROVIDED BY EQUIPMENT MANUFACTURER, INTEGRAL WITH EQUIPMENT. PROVIDE CIRCUIT AND FINAL CONNECTION TO DISCONNECT SWITCH AS INDICATED.
2. INDOOR UNIT OF SPLIT-SYSTEM IS POWERED FROM OUTDOOR UNIT. PROVIDE ELECTRICAL CONNECTION BETWEEN UNITS PER MANUFACTURER REQUIREMENTS. COORDINATE ALL ELECTRICAL REQUIREMENTS, FINAL UNIT LOCATIONS, AND CIRCUIT ROUTING WITH MECHANICAL CONTRACTOR PRIOR TO ROUGH-IN.
3. DISCONNECT SWITCH AND WEATHERPROOF GFCI SERVICE RECEPTACLE ARE PROVIDED BY EQUIPMENT MANUFACTURER, INTEGRAL WITH EQUIPMENT. PROVIDE CIRCUITS AND FINAL CONNECTIONS AS INDICATED.

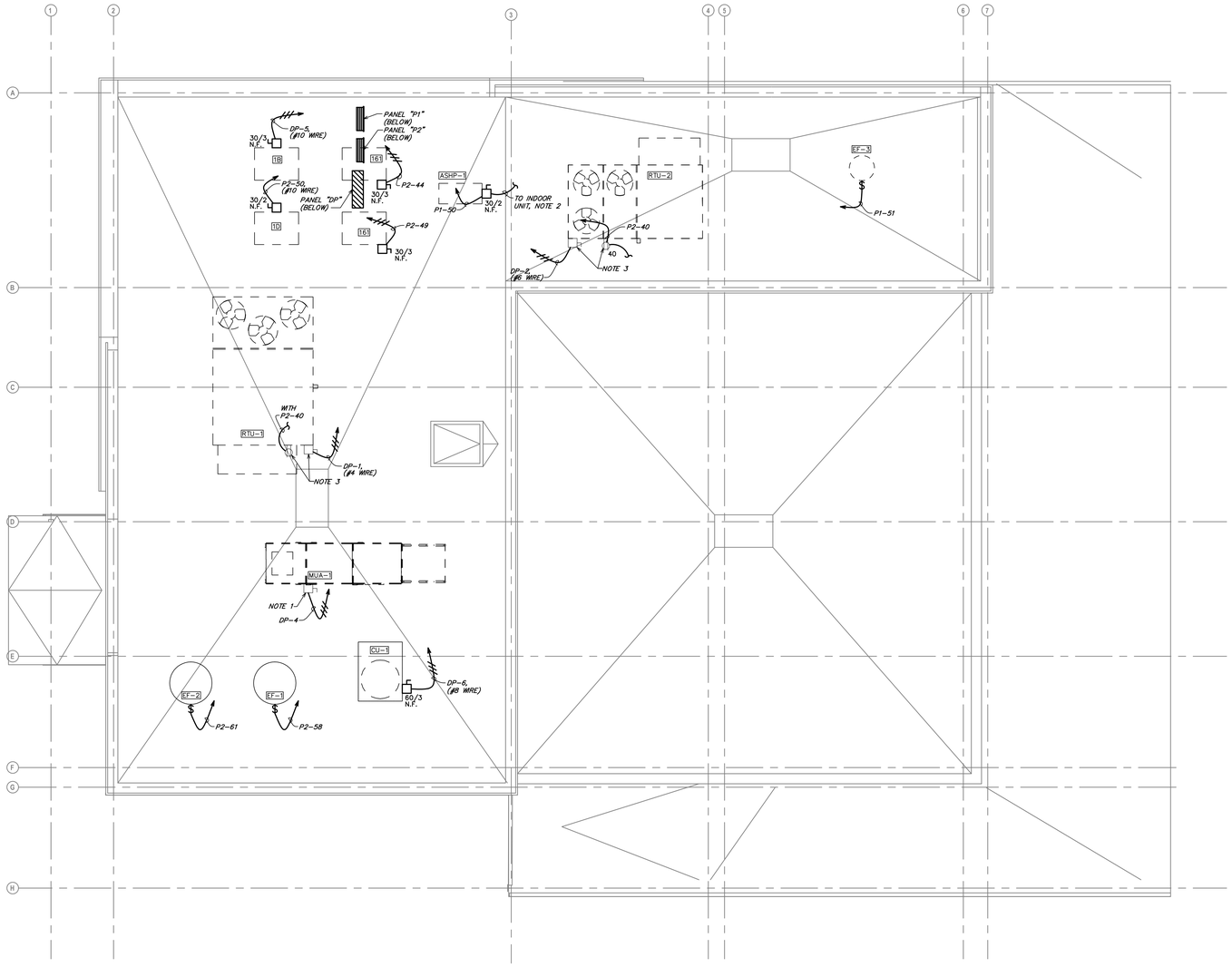


1 ELECTRICAL ROOF PLAN
SCALE: 1/4" = 1'-0"

Bergmeyer
LA - 800 South Figueroa St. Suite 1100 Los Angeles, CA 90017 212.337.1090
BOS - 51 Sleeper St. 4th Floor Boston, MA 02210 617.542.1025
www.bergmeyer.com

CONSULTANTS:
Schnackel engineers
800-581-0963
www.schnackel.com
SE JOB# 200363

SEAL/ SIGNATURE:
STATE OF MISSOURI
GREGORY ROY SCHNACKEL
NUMBER
E-026570
Date: 03/05/21
COA #: E-2009006642

| NO. | BY | DATE | DESCRIPTION |
|---|---|---|---|
| 1 | | 2021-03-09 | ADDENDUM #1 |
| | | 2021-01-11 | PERMIT/BID SET |
| | | 2020-12-21 | 75% SET |
| | | 2020-10-12 | DD SET |

SHAKE SHACK

SHAKE SHACK - LEE'S SUMMIT MO

LEE'S SUMMIT
MISSOURI
SHACK #1348

PERMIT/BID SET

ELECTRICAL ROOF PLAN

| | |
|---|---|
| DRAWN BY: | AEH |
| CHECKED BY: | GRS |
| JOB NO: | 20068.00 |

E150

RELEASE FOR CONSTRUCTION
AS NOTED ON PLANS REVIEW
DEVELOPMENT SERVICES
LEE'S SUMMIT, MISSOURI
03/10/2021

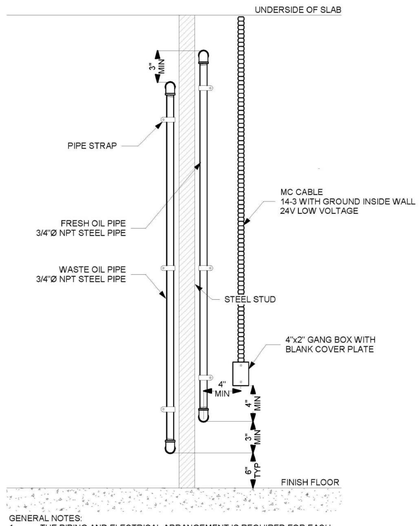


GENERAL NOTES:
1. THE PIPING AND ELECTRICAL ARRANGEMENT IS REQUIRED FOR EACH FRYER.

## 8 FRYER RTI DETAIL
NOT TO SCALE

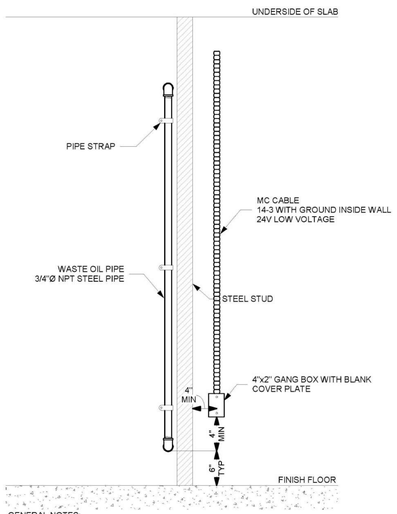


GENERAL NOTES:
1. THE PIPING AND ELECTRICAL ARRANGEMENT IS REQUIRED FOR THE GRIDDLE GREASE UNIT.

## 7 GRIDDLE RTI DETAIL
NOT TO SCALE

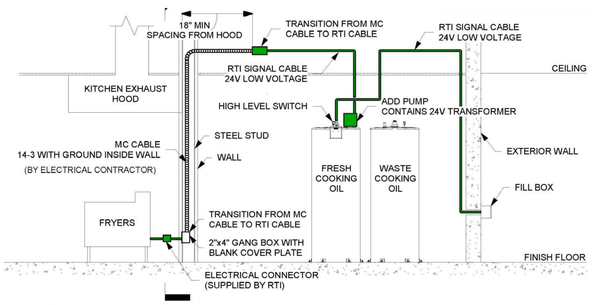


GENERAL NOTES:
1. ELECTRICAL WIRING WILL BE INSTALLED BY RTI, UNLESS OTHERWISE NOTED.

## 6 RTI SYSTEM DETAIL
NOT TO SCALE

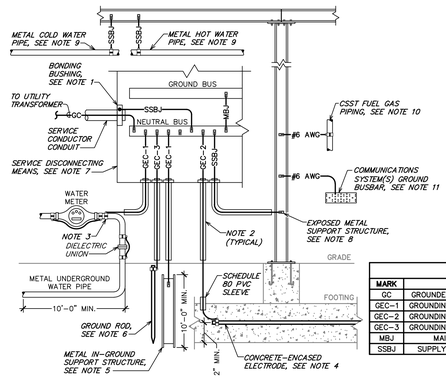


| CONDUCTOR SCHEDULE | | |
|---|---|---|
| MARK | DESCRIPTION | SIZED PER |
| GC | GROUNDED CONDUCTOR (NEUTRAL) | SEE ONE-LINE DIAGRAM |
| GEC-1 | GROUNDING ELECTRODE CONDUCTOR | NEC TABLE 250.66 |
| GEC-2 | GROUNDING ELECTRODE CONDUCTOR | #4 AWG |
| GEC-3 | GROUNDING ELECTRODE CONDUCTOR | #6 AWG |
| MBJ | MAIN BONDING JUMPER | NEC TABLE 250.102(C)(1) |
| SSBJ | SUPPLY-SIDE BONDING JUMPER | NEC TABLE 250.102(C)(1) |

***GENERAL NOTES APPLICABLE TO THIS DETAIL:***
*A. ALL REFERENCES TO THE NATIONAL ELECTRICAL CODE (NEC) ON THIS DETAIL REFER TO THE 2017 EDITION OF THE NEC (NFPA 70-2017).*
*B. PHASE CONDUCTORS ARE NOT SHOWN.*
*C. CONDUCTORS ARE COPPER UNLESS NOTED OTHERWISE.*

***NOTES APPLICABLE TO THIS DETAIL:***
*1. PROVIDE A BONDING BUSHING ON ALL METAL CONDUITS CONTAINING SERVICE CONDUCTORS PER NEC SECTION 250.92(B)(4) REQUIREMENTS AND PROVIDE A SUPPLY-SIDE BONDING JUMPER SIZED PER NEC TABLE 250.102(C)(1).*
*2. WHERE EXPOSED TO PHYSICAL DAMAGE, ENCLOSE GROUNDING ELECTRODE CONDUCTORS IN SCHEDULE 80 PVC CONDUIT PER NEC SECTION 250.64(B) REQUIREMENTS.*
*A. WHERE SCHEDULE 80 PVC CONDUIT CANNOT BE USED, SUCH AS IN PLENUM CEILINGS, ENCLOSE CONDUCTORS IN RIGID METAL CONDUIT. PROVIDE A BONDING BUSHING AT EACH END PER NEC SECTION 250.64(E)(1) AND PROVIDE SUPPLY-SIDE BONDING JUMPER WHICH IS THE SAME SIZE AS THE ENCLOSED GROUNDING ELECTRODE CONDUCTOR PER NEC SECTION 250.64(E)(3) REQUIREMENTS.*
*3. PER NEC SECTION 250.52(A)(1), CONNECT TO THE BUILDING'S METAL UNDERGROUND WATER PIPE THAT IS IN DIRECT CONTACT WITH THE EARTH FOR A MINIMUM OF 10 FEET, IF PRESENT. PER NEC SECTION 250.68(C)(1) REQUIREMENTS, THE CONNECTION SHALL BE MADE WITHIN 5 FEET OF THE WATER PIPE'S ENTRANCE INTO THE BUILDING AND A JUMPER SHALL BE PROVIDED AROUND ANY WATER METER AND DIELECTRIC UNIONS. JUMPER SHALL BE THE SAME SIZE AS THE GROUNDING ELECTRODE CONDUCTOR CONNECTING TO THE WATER PIPE.*
*4. PER NEC SECTION 250.52(A)(3) REQUIREMENTS, PROVIDE A GROUNDING ELECTRODE ENCASED IN AT LEAST 2" OF CONCRETE AND LOCATED NEAR THE BOTTOM OF A CONCRETE FOUNDATION OR FOOTING THAT IS IN DIRECT CONTACT WITH EARTH. GROUNDING ELECTRODE SHALL CONSIST OF AT LEAST 20 FEET OF ONE OR MORE BARE OR ZINC GALVANIZED OR OTHER ELECTRICALLY CONDUCTIVE COATED STEEL REINFORCING BARS OR RODS OF NOT LESS THAN 1/2" IN DIAMETER OR A MINIMUM OF 20 FEET OF #4 AWG BARE COPPER CONDUCTOR. THIS CONCRETE-ENCASED ELECTRODE IS ALSO KNOWN AS A "UFER" GROUND.*
*5. PER NEC SECTION 250.52(A)(2) REQUIREMENTS, PROVIDE A GROUNDING ELECTRODE CONDUCTOR TO ONE METAL IN-GROUND SUPPORT STRUCTURE THAT IS IN DIRECT CONTACT WITH THE EARTH VERTICALLY FOR 10 FEET OR MORE. IF PRESENT, AND BOND IT USING A UL LISTED IRREVERSIBLE CLAMP OR WELDED LUG.*
*6. PROVIDE AT LEAST ONE SUPPLEMENTAL GROUNDING ELECTRODE IN THE FORM OF A 10-FOOT LONG BY 3/4" DIAMETER COPPER GROUND ROD INSTALLED PER NEC ARTICLE 250 REQUIREMENTS.*
*7. WHEN THE SERVICE CONSISTS OF MULTIPLE DISCONNECTING MEANS IN SEPARATE ENCLOSURES, CONNECT A TAP CONDUCTOR FROM THE MAIN GROUNDING ELECTRODE CONDUCTOR TO EACH DISCONNECTING MEANS. SIZE THIS TAP BASED ON THE LARGEST SERVICE CONDUCTOR IN THAT SERVICE DISCONNECT ENCLOSURE.*
*8. PER NEC SECTION 250.104(C)(2), BOND EXPOSED STRUCTURAL METAL BUILDING FRAME, IF PRESENT, TO THE GROUNDED CONDUCTOR AT THE SERVICE. PER NEC SECTION 250.68(C)(2), THIS STRUCTURAL FRAME IS PERMITTED TO BE USED AS A GROUNDING ELECTRODE CONDUCTOR.*
*9. PER NEC SECTION 250.104(A), BOND THE METAL WATER PIPING SYSTEM TO THE METAL BUILDING FRAME.*
*10. PER NFPA 54-2018 SECTION 7.12.2, BOND CORRUGATED STAINLESS STEEL TUBING (CSST) FUEL GAS PIPING, IF PRESENT, TO THE GROUNDING ELECTRODE SYSTEM. THE BONDING CONDUCTOR SHALL NOT EXCEED 75 FEET IN LENGTH PER NFPA 54-2018 SECTION 7.12.2.3.*
*11. PER NEC SECTION 250.94(B), PROVIDE BURNDY #BCB144125T, OR EQUAL, 1/4" THICK BY 4" WIDE BY 12" LONG COPPER GROUND BUSBAR, INCLUDING ALL BRACKETS, INSULATORS, AND PLEXIGLASS COVER, AT THE MAIN COMMUNICATIONS SYSTEM ENTRANCE FOR BONDING THE COMMUNICATIONS SYSTEMS TO THE BUILDING'S GROUNDING ELECTRODE SYSTEM.*

## 5 SERVICE ENTRANCE GROUNDING AND BONDING DETAIL
NOT TO SCALE

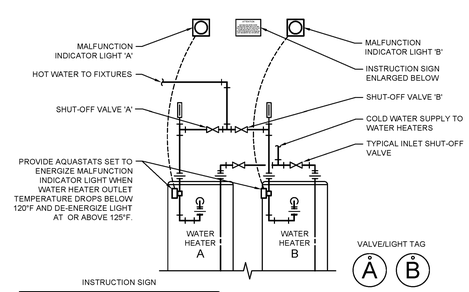


### ATTENTION

LIGHT INDICATES WATER HEATER MALFUNCTION. WHEN LIGHT IS ON TURN VALVE WITH THE TAG, THAT MATCHES THE TAG BELOW THE LIGHT, SO THAT THE LEVER IS PERPENDICULAR TO PIPING AND HAVE MANAGEMENT CALL FOR SERVICE.

PROVIDE TAGS MOUNTED BELOW EACH MALFUNCTION INDICATOR LIGHT AND HANGING FROM HOT WATER SHUT-OFF VALVES. LABEL TAGS AS INDICATED ABOVE.

### MALFUNCTION INDICATOR LIGHT

DESCRIPTION: 120V, STEADY-ON RED SIGNALING LIGHT WITH THREADED BASE AND SHATTER RESISTANT POLY-CARBONATE LENS. UL LISTED

- EDWARDS #125 SERIES
- FEDERAL SIGNAL #LP22 SERIES

## 3 WATER HEATER MALFUNCTION INDICATOR DETAIL
NOT TO SCALE

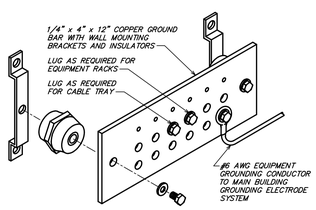


***GENERAL NOTES APPLICABLE TO THIS DETAIL:***
*A. NOT ALL PARTS AND PART NUMBERS ARE SHOWN IN THE DETAIL. THE ELECTRICAL CONTRACTOR IS RESPONSIBLE FOR A COMPLETE WORKING INSTALLATION, INCLUDING MISCELLANEOUS APPURTENANCES REQUIRED BUT NOT SHOWN.*

## 2 GROUND BAR DETAIL
NOT TO SCALE

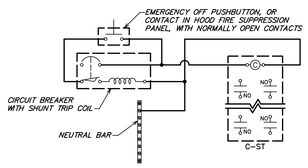


***GENERAL NOTES APPLICABLE TO THIS DETAIL:***
*A. SEE PANEL SCHEDULES FOR CIRCUITS THAT ARE TO BE CONTROLLED BY EACH CONTACTOR.*
*B. EACH CONTACTOR CONSTITUTES A CONTROL ZONE. ALTHOUGH NOT SPECIFICALLY SHOWN ON THIS DETAIL, PROVIDE MULTIPLE CONTACTORS WIRED IN PARALLEL WHEN THE NUMBER OF CIRCUITS IN A CONTROL ZONE EXCEEDS THE MAXIMUM NUMBER OF POLES AVAILABLE ON A SINGLE CONTACTOR. PROVIDE A MINIMUM OF 2 SPARE CONTACTOR POLES PER CONTROL ZONE.*
*C. ALL CONTACTORS SHALL BE ELECTRICALLY HELD AND PROVIDED WITH NORMALLY OPEN CONTACTS, SQUARE D CLASS 8903 OR EQUAL, TYPE L FOR LOADS UP TO 30 AMPS OR TYPE S FOR LOADS GREATER THAN 30 AMPS.*
*D. CONTACTS SHALL CARRY A CURRENT RATING EQUAL TO OR GREATER THAN THE RATING OF THE OVERCURRENT PROTECTIVE DEVICES OF THE CIRCUITS CONTROLLED BY THE CONTACTOR.*
*E. MOUNT CONTACTORS ADJACENT TO THE ASSOCIATED PANELBOARD(S). ALL CONTACTORS SHALL BE PROVIDED WITH INDIVIDUAL ENCLOSURES. AT THE CONTRACTOR'S OPTION, OPEN CONTACTORS ARE PERMITTED WHEN MOUNTED WITHIN A COMMON ENCLOSURE.*
*F. COORDINATE MOUNTING LOCATION OF EMERGENCY OFF PUSHBUTTON WITH THE OWNER AND AUTHORITY HAVING JURISDICTION.*

## 1 SHUNT TRIP CONTACTOR WIRING DIAGRAM
NOT TO SCALE

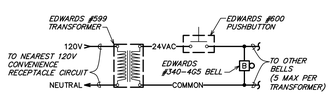


***GENERAL NOTES APPLICABLE TO THIS DETAIL:***
*A. THIS DETAIL IS SCHEMATIC IN NATURE AND IS NOT INTENDED TO BE PROJECT-SPECIFIC IN TERMS OF NUMBER OF COMPONENTS. THE CONTRACTOR SHALL CORRELATE THE COMPONENTS SHOWN ON THE PLAN WITH THIS DETAIL AND APPLY THIS DETAIL AS REQUIRED FOR A COMPLETE OPERATIONAL SYSTEM.*

## 4 BELL SYSTEM SCHEMATIC
NOT TO SCALE

Bergmeyer
BOS - 51 Sleeper St. 6th Floor Boston, MA 02210 617.542.1025
LA - 800 South Figueroa St. Suite 1580 Los Angeles, CA 90017 212.337.1090
www.bergmeyer.com

CONSULTANTS:
Schnackel engineers
800-581-0963
www.schnackel.com
SE JOB# 200363

SEAL/ SIGNATURE:
STATE OF MISSOURI
GREGORY ROY SCHNACKEL
NUMBER E-026570
Date: 03/05/21
COA #: E-2009006642

| NO. | BY | DATE | DESCRIPTION |
|---|---|---|---|
| 1 | | 2021-03-09 | ADDENDUM #1 |
| | | 2021-01-11 | PERMIT/BID SET |
| | | 2020-12-21 | 75% SET |
| | | 2020-10-12 | DD SET |

SHAKE SHACK

SHAKE SHACK - LEE'S SUMMIT MO

LEE'S SUMMIT
MISSOURI
SHACK #1348

PERMIT/BID SET

ELECTRICAL DETAILS

| | |
|---|---|
| DRAWN BY: | AEH |
| CHECKED BY: | GRS |
| JOB NO: | 20068.00 |

E501

SECTION 260000 - ELECTRICAL GENERAL CONDITIONS
SECTION 260502 - TRENCHING AND BACKFILL FOR ELECTRICAL
SECTION 260519 - CONDUCTORS AND CABLES
SECTION 260526 - GROUNDING AND BONDING
SECTION 260529 - HANGERS AND SUPPORTS FOR ELECTRICAL SYSTEMS
SECTION 260534 - CONDUIT AND WIREWAYS
SECTION 260537 - BOXES
SECTION 260553 - IDENTIFICATION FOR ELECTRICAL SYSTEMS
SECTION 260595 - FIRE STOPPING
SECTION 260919 - CONTACTORS AND RELAYS
SECTION 260923 - LIGHTING CONTROL DEVICES
SECTION 262416 - PANELBOARDS
SECTION 262701 - ELECTRICAL SERVICE ENTRANCE
SECTION 262717 - EQUIPMENT WIRING
SECTION 262726 - WIRING DEVICES
SECTION 262813 - FUSES
SECTION 262818 - ENCLOSED SWITCHES
SECTION 264313 - SURGE PROTECTIVE DEVICES
SECTION 265100 - INTERIOR LIGHTING
SECTION 271005 - TELEPHONE AND DATA SYSTEMS
SECTION 275132 - TELEVISION SYSTEMS
SECTION 260800 - COMMISSIONING OF ELECTRICAL SYSTEM

## SECTION 260000 - ELECTRICAL GENERAL CONDITIONS

PART 1 GENERAL
1.01 SUMMARY
A. This Section supplements all Sections of the Specifications for Division 26, Division 27, and Division 28 and shall apply to all phases of work hereinafter specified, shown on the Drawings, or required to provide a complete installation of approved electrical systems.
B. The Drawings, General Conditions and General Provisions of the Contract apply to this Section and the other Sections of Division 26, Division 27, and Division 28 of the specifications. Where conflicts arise between these documents, the more stringent provision will be applicable, subject to the interpretation of the Engineer.
C. Furnish all labor, material, services, and skilled supervision necessary for the construction, erection, installation, connections, testing, and adjustment of all materials and electrical equipment specified herein, or shown or noted on the Drawings, and its delivery to the Owner, complete in all respects and ready for use.
D. Where plans indicate fixtures or equipment will be furnished by this Contractor for installation by other Contractors, this Contractor shall furnish all such equipment, complete in all respects and ready for installation. Drawings, instructions, and manuals supplied with equipment shall be carefully preserved and turned over to the installing Contractor.
E. Where plans indicate fixtures or equipment will be furnished by others, this Contractor shall provide all rough-in and supplies and shall connect such equipment to the electrical system. Drawings, instructions, and manuals supplied with equipment shall be carefully preserved and turned over to the Architect.
1.02 DEFINITIONS
A. Work: The construction and services required by the Contract Documents whether completed or partially completed and includes all labor, materials, equipment, and services provided or to be provided by the Contractor to fulfill the Contractor's obligations. The work may constitute the whole or a part of the project.
B. Furnish: To supply and deliver, unload, and inspect for damage.
C. Install: To unpack, assemble, erect, apply, place, finish, cure, protect, clean, connect, and place into operation into the work.
D. Provide: To furnish and install.
E. Connect: To bring service to the equipment and make final attachment including necessary switches, outlets, boxes, terminations, etc.
F. Concealed: Hidden from sight in chases, furred spaces, shafts, hung ceilings, embedded in construction, in crawl spaces, or buried.
G. Exposed: Not installed underground nor concealed as defined.
H. Drawings: All plans, details, equipment schedules, diagrams, sketches, etc. issued for the construction of the work.
I. Conduit: Conduit, and all required fittings, pull boxes, hangers, and other supports and accessories related to such conduit.
1.03 CODES AND STANDARDS
A. Perform work in accordance with the applicable Building Code, Electrical Code, Fire Code, Mechanical Code, Plumbing Code, Energy Code, and all other applicable codes, amendments, and ordinances. Also perform all work in accordance with:
1. Occupational Safety and Health Administration (OSHA) Regulations.
2. Americans with Disabilities Act (ADA).
3. The Authority Having Jurisdiction.
4. Landlord requirements including Tenant Criteria Manuals and Lease Exhibits.
5. Utility company requirements.
B. Recognized Standards: Design, manufacture, testing and method of installation of all apparatus and materials furnished under the requirements of these Specifications shall conform to the latest publications or standard rules of Institute of Electrical and Electronic Engineers (IEEE), National Electrical Manufacturers Association (NEMA), Underwriters Laboratories, Inc. (U.L.), National Fire Protection Association (NFPA), American Society for Testing and Materials (ASTM), American National Standards Institute (ANSI), National Electrical Code (NEC), National Electrical Safety Code (NESC), National Electrical Contractors Association (NECA), and American Institute of Steel Construction (AISC).
C. Code, Landlord, and utility company requirements supersede any requirements of the Drawings and/or Specifications. The Contract Documents take precedence where the Contract Documents exceed code, Landlord, utility, or recognized standards requirements.
1.04 PERMITS AND FEES: Permits, licenses, fees, inspections and arrangements required for the work under this Contract shall be obtained by the Contractor at his expense.
1.05 TEMPORARY SERVICES FOR CONSTRUCTION
A. Provide a temporary electrical service, including all required equipment such as transformers, generators and fuel, panelboards, etc. as required by all trades. Coordinate power requirements for the temporary service with the General Contractor and the utility company prior to the start of construction. The Contractor is responsible to develop all temporary service plans and specifications as required by the Authority Having Jurisdiction, submit those plans and specifications as required by the Authority Having Jurisdiction, and to pay for all temporary service energy consumption.
B. Provide all temporary lighting necessary to provide lighting levels in compliance with OSHA Regulations and as required by all trades.
1.06 CONTRACT DRAWINGS
A. Obtain, fully understand, and coordinate the work with the complete set of Contract Documents. Any required corrections, including all associated costs, arising from lack of coordination with the complete set of Contract Documents is the Contractor's sole responsibility.
B. Work under these Sections is diagrammatic and is intended to convey the scope of work and indicate the general arrangement of equipment, conduit, and outlets. Obtain instructions from the Architect/Engineer prior to rough-in wherever a question exists as to the exact intended location of outlets or equipment.
C. Promptly report and discrepancies discovered within the Contract Documents. Failure of the Contractor to report discrepancies shall result in the resolution becoming the Contractor's responsibility and subject to the Architect/Engineer's review and possible rejection. Should the Architect/Engineer reject a discrepancy resolution of which they were not notified, the Contractor is fully responsible to correct the installation, including all associated costs, until approval of the installation is given by the Architect/Engineer.
1.07 SUBMITTALS FOR ENGINEER REVIEW:
A. Furnish the following submittals to the Architect for review by the Engineer:
1. Product data for floor boxes and all associated cover plates and flanges.
2. Product data and shop drawings for remote control switching devices.
3. Product data for contactors and relays.
4. Product data and shop drawings for lighting control devices.
5. Product data and shop drawings for central dimming systems.
6. Shop drawings for low voltage transformers.
7. Shop drawings for switchboards.
8. Shop drawings for panelboards.
9. Shop drawings for motor control centers.
10. Product data and shop drawings for electrical service entrance equipment.
11. Product data for multi-outlet assemblies.
12. Product data for enclosed switches.
13. Product data for enclosed controllers.
14. Product data and shop drawings for variable frequency drives.
15. Product data and shop drawings for lighting inverters.
16. Product data and shop drawings for surge protective devices.
17. Product data for interior lighting.
18. Product data for exterior lighting.
19. Product data and shop drawings for telephone and data systems.
20. Product data and shop drawings for television systems.
B. Use manufacturer's specification sheets identified by number indicated on drawings or schedules.
C. Indicate catalog number on the cut sheets.
D. Submittals other than those listed above will not be reviewed and will be returned stating such.
E. Submittals are reviewed only for general compliance with the Contract Documents. Dimensions, quantities and details are not checked during submittal review. Review of the submittals does not relieve the Contractor of the responsibility for providing all materials, equipment and accessories necessary for a complete and operational system meeting the requirements of the project and the intent of the Contract Documents. The responsibility for coordination of substituted materials and equipment lies solely with the substituting Contractor.
1.08 QUALITY ASSURANCE
A. All components shall be listed and classified by Underwriters Laboratories, Inc. as suitable for the purpose and free of all rust/corrosion or any visible damage. All items not complying with this requirement shall be replaced without any change in the Contract amount.
B. Unless otherwise specified, all equipment, devices, luminaires, and materials of the same type or classification and used for the same purpose shall be products of the same manufacturer. Use only new, un-weathered, and unused material, except as specifically noted.
C. Equipment performance and accessories shall be as indicated on the Drawings and/or specified herein. Inclusion in both locations is not a prerequisite to inclusion in the Contract; equipment and accessories specified in either location shall be included in the Contract. Provide all necessary accessories and connections as required for a complete, functional system, including all required components reasonably inferred to as necessary although such components may or may not be specifically indicated in the Contract Documents.
1.09 DELIVERY, STORAGE, AND HANDLING: Accept all materials on site and inspect for damage and protect from corrosion and entrance of debris. Handle all materials in accordance with manufacturer's instructions to avoid damage to internal components, enclosures, and finishes.
1.10 WARRANTY AND GUARANTEE: Provide a complete parts and labor warranty and guarantee on all systems for a period of one year from Owner acceptance of the completed facility. This warranty and guarantee shall cover all failures unless such failure is directly attributable to vandalism or causes other than defects in material or workmanship.

PART 2 PRODUCTS
2.01 CONDUCTOR TERMINATIONS: Provide conductor terminations rated at a minimum of 75 degrees C in all equipment.
2.02 SUBSTITUTIONS: The products specified in the Contract Documents constitute the Basis of Design for the Construction Documents and set minimum standards for quality, design, and functionality. Other products are permitted to be submitted, at the Contractor's option, during shop drawing review unless indicated otherwise. Any substitute products shall meet or exceed all requirements specified. Any costs and coordination issues arising out of any substitution, including coordination with all other contractors and subcontractors and any associated costs, is the substituting contractor's sole responsibility.

PART 3 EXECUTION
3.01 COORDINATION OF WORK
A. Work lines and established heights shall be in strict accordance with architectural drawings and specifications. Verify all dimensions shown and establish all elevations and detailed dimensions not shown prior to rough-in.
B. Promptly report any difficulties encountered in the installation of the work which might prevent prompt and proper installation. Failure to report shall constitute an acceptance of the work of other trades as being fit and proper for the execution of this work.
C. Coordinate the work with all trades so that it proceeds without delay and minimizes interference to work that is in progress or has not been completed. Conflicts arising from lack of coordination shall be this Contractor's responsibility. The Electrical Contractor shall pay for all extra cutting and patching necessary by any lack of coordination.
D. Arrange all conduit runs in such a manner that it does not interfere with grilles, diffusers, outlet boxes, luminaires, or other items while providing for maximum headroom. Maintain access to equipment requiring service when selecting mounting elevations.
E. Afford other trades reasonable opportunity for the execution of their work and connect the work of other trades as to not delay or interfere with their work.
F. Explicitly follow all manufacturer's installation instructions and promptly report any conflicts between the manufacturer's installation instructions and the Contract Documents.
G. Provide all supplementary or miscellaneous items, appurtenances, and devices incidental to or necessary for a sound, secure and complete installation.
H. Verify and coordinate all requirements and installation details of all materials and equipment prior to rough-in. Obtain and review shop drawings, product data, manufacturer's wiring diagrams, and manufacturer's instructions for equipment furnished under other Sections. Determine connection locations and requirements, sequence rough-in of electrical connections to coordinate with installation of equipment, sequence electrical connections to coordinate with start-up of equipment, and verify that proper power supply is available prior to subcontractor's ordering equipment. Verify proper voltage, phase, and current rating of power supply and report any discrepancies prior to order, connection of equipment, or start-up. Responsibility for verification of proper power supply voltage and any damage resulting from incorrect connections shall rest with this Contractor and any conflicts arising from lack of coordination shall be this Contractor's responsibility.
3.02 ACCESS TO EQUIPMENT: Install all equipment, starters, switches, receptacles, and boxes so that all parts are easily accessible for inspection, operation, maintenance, and repair. Provide access doors, fire rated where required, for concealed equipment.
3.03 CUTTING, PATCHING, AND PIERCING
A. Cut all openings in a neat workmanlike manner, only as large as required for the installation, and leave surfaces around openings smooth and finished to match surrounding surface.
B. Patch existing finished surfaces and building components using new materials matching existing materials.
C. Fire and/or Smoke Rated Assemblies: Become familiar with all fire and/or smoke rated construction and install work to maintain the integrity of those ratings.
D. Roof Penetrations: Coordinate with the Roofing Contractor to provide any required roof penetrations.
3.04 FIELD QUALITY CONTROL
A. Install all equipment, devices, luminaires, and materials plumb, level, securely, and in a neat and workmanlike manner in accordance with NFPA 70 and all applicable NECA and NEMA standards.
B. Adjust all flush mounted equipment, boxes, cabinets, and enclosures such that they are flush with finished wall or flooring material.
C. Replace or refinish damaged equipment, devices, luminaires, materials, and surfaces where marring or disfigurement has occurred.
D. Clean electrical parts to remove harmful materials. Clean exposed surfaces of all equipment, devices, luminaires, and materials and the interior of all boxes, enclosures, and cabinets of all foreign materials.
E. Paint all electrical equipment and materials located on exterior walls, on the roof where exposed to view, where visible from 6'-0" above grade from any property line, and all exposed conduit to match the surrounding surfaces. Coordinate paint color with the Architect.
3.05 TESTING AND INSPECTION
A. Testing: Test the entire system under operating conditions over a sufficient period of time to establish the adequacy, quality, safety, completed status, and suitable operation of all equipment, devices, systems, etc.
B. Inspection: Obtain all required certificates of inspection and approval.
3.06 PROJECT CLOSEOUT
A. Project Record Documents: Provide one printed copy and one electronic copy of project record drawings to the Owner. Project record drawings shall reflect the actual "as-built" conditions and shall include locations of all equipment, devices, and luminaires, circuiting arrangements, routing of all underfloor conduits, routing of conduits larger than 2 inches, locations and mounting heights of all outlet, pull, and junction boxes, locations of all items requiring maintenance and inspection, and locations of components and circuiting and switching arrangements of lighting controls.
B. Operation and Maintenance Data: Provide one printed copy and one electronic copy of operation and maintenance data for all equipment, devices and luminaires to the Owner. Operation and maintenance data shall include manufacturer's cut sheets, maintenance procedures, recommended maintenance intervals, wiring diagrams, parts lists, manufacturers' warranties, certificates, and test reports of each item installed.
C. Maintenance Materials: Provide to the Owner two keys for each different enclosure and cabinet, including panelboards, two spare fuses of each type and size, and one fuse puller.
D. Test Reports: Provide one printed copy and one electronic copy of all completed test reports to the Owner.

END OF SECTION

## SECTION 260502 - TRENCHING AND BACKFILL FOR ELECTRICAL

PART 1 GENERAL
1.01 DEFINITIONS
A. Subgrade Elevations: 4 inches below finish grade unless directed otherwise.
B. Finish Grade Elevations: 4 inches above subgrade unless directed otherwise.
1.02 PROJECT CONDITIONS
A. Provide sufficient quantities of fill and store materials on site in advance of need. Separate differing materials with dividers or stockpile separately and protect stockpiles from erosion and deterioration of materials.
B. Verify all survey bench marks and intended elevations for the work.
C. Protect all existing landscaping, hardscaping, existing structures, benchmarks, survey control points, and other features to remain from excavating equipment and vehicular traffic.

PART 2 PRODUCTS
2.01 FILL MATERIALS
A. General Fill: Subsoil excavated from site and free of lumps larger than 3 inches, rocks larger than 2 inches, and debris.
B. Granular Fill: Natural stone pea gravel free of clay, shale, and organic matter.
C. Topsoil: Select topsoil excavated from site and free of roots, rocks larger than 1/2 inch, subsoil, debris, large weeds and foreign matter.

PART 3 EXECUTION
3.01 EXAMINATION
A. Identify required lines, levels, contours, and datum locations.
B. Locate and identify all utilities and protect same from damage.
3.02 TRENCHING
A. Report any unexpected subsurface conditions and discontinue affected work in area until notified to resume.
B. Do not interfere with 45 degree bearing splay of foundations.
C. Cut trenches wide enough to allow inspection of installed utilities. Slope banks of excavations deeper than 4 feet to angle of repose or less until shored.
D. Hand trim excavations and remove loose matter, large stones, and other hard matter which could damage utilities or impede consistent backfilling or compaction.
3.03 PREPARATION FOR UTILITY PLACEMENT
A. Replace soft areas of subgrade not capable of compaction with general fill.
B. Compact subgrade to density equal to or greater than requirements for subsequent fill material.
C. Maintain excavations and prevent loose soil from falling into excavation until ready for backfill.
3.04 BEDDING AND FILL
A. Backfill to contours and elevations required using unfrozen materials and a placement method that does not disturb or damage other work.
B. Unless indicated otherwise, use granular fill bedding covered with general fill up to finished grade elevation and compact all fill materials in equal continuous layers not exceeding 8 inches compacted depth to 97 percent of maximum dry density.
C. Fill thrust bearing surfaces with concrete.
3.05 FIELD QUALITY CONTROL
A. Perform compaction density testing every 2 feet on compacted fill in accordance with ASTM D1556, ASTM D2167, ASTM D2922, or ASTM D3017. Evaluate results in relation to compaction curve in accordance with ASTM D698, ASTM D1557, or AASHTO T 180. Remove, replace, and retest fill if tests indicate work does not meet specified requirements.

END OF SECTION

## SECTION 260519 - CONDUCTORS AND CABLES

PART 1 GENERAL - NOT USED

PART 2 PRODUCTS
2.01 BUILDING WIRE AND CABLES
A. Provide single conductor building wire installed in raceway unless indicated otherwise, otherwise permitted, or otherwise required.
B. All conductors shall be copper conductors with 600V insulation; type THHN for dry and damp locations and type THWN-2 for wet locations.
C. Metal Clad Cable (Type MC): Permitted only for branch circuits in concealed locations and only when approved by applicable codes and amendments and the Authority Having Jurisdiction. Exposed MC Cable is not permitted; no exceptions.
1. All MC Cable sheaths shall be listed and identified for grounding.
2. All MC Cable shall be equipped with copper equipment grounding conductor. No exceptions.
D. Nonmetallic-Sheathed Cable (Type NM): Type NM-B permitted only within individual dwelling units and common areas of multifamily dwelling occupancies which are Type III, IV, or V construction when permitted by all local and national codes and amendments and the Authority Having Jurisdiction. Exposed NM Cable is not permitted; no exceptions.
E. Use solid or stranded conductors for all conductors 10 AWG and smaller. Use stranded conductors for all conductors 8 AWG and larger.
F. Wire Sizes:
1. Use 12 AWG conductors, minimum, for all circuits unless indicated otherwise or as modified as follows:
a. 20A, 120V circuits longer than 75 feet: 10 AWG to offset voltage drop.
b. 20A, 120V circuits longer than 150 feet: 8 AWG to offset voltage drop.
c. 20A, 277V circuits longer than 150 feet: 10 AWG to offset voltage drop.
2. Wire sizes indicated on the Drawings or indicated above shall be carried through the entire circuit to the furthest outlet box on the associated circuit unless indicated otherwise.
a. Where a circuit splits into multiple branches, the wire size shall be carried through the entirety of each branch to the furthest outlet box on each branch unless indicated otherwise.
2.02 CONTROL CABLES
A. All control cable conductor sizes, quantities, stranding, and shielding as recommended by the manufacturer and required for the installation but no smaller than 18 AWG.
B. Horizontal Applications in Conduit: Type CL2 unless otherwise required.
C. Horizontal Applications not in Conduit: Type CL2P unless otherwise required.
D. Riser Applications: Type CL2R unless otherwise required.
2.03 COMMUNICATIONS CABLES: See Section 271005.
2.04 WIRING CONNECTORS
A. Use twist-on insulated spring connectors, mechanical connectors, or compression connectors for conductor sizes 8 AWG and smaller. Do not use push-in wire connectors as a substitute for twist-on insulated spring connectors.
B. Use mechanical connectors or compression connectors for conductor sizes 6 AWG and larger.
C. Use crimped terminals for all control circuit conductor connections.

PART 3 EXECUTION
3.01 PREPARATION: Clean raceways thoroughly to remove foreign materials before installing conductors and cables.
3.02 COLOR CODING
A. Color code conductors as follows and maintain consistent color coding throughout project including branch circuit conductors.
1. 208Y/120 V, 3 phase, 4 Wire System
a. Phase A: Black
b. Phase B: Red
c. Phase C: Blue
d. Neutral/Grounded: White
2. Equipment Ground: Green
3. Isolated Ground: Green with yellow stripe
3.03 INSTALLATION
A. Circuit routing indicated is diagrammatic. Arrange circuiting to minimize splices and include circuit lengths required to install connected devices within 10 feet of location shown.
B. Combining branch circuits in a single raceway is permitted under the following conditions:
1. Provide no more than six current-carrying conductors in a single raceway. Dedicated neutral conductors are considered current-carrying conductors.
2. Increase size of conductors as required to account for ampacity derating.
3. Size raceways, boxes, etc. to accommodate conductors.
C. Neutral Conductors:
1. Provide separate neutral conductors for:
a. Branch circuits protected by ground fault circuit interrupter (GFCI) circuit breakers.
b. Branch circuits protected by arc fault circuit interrupter (AFCI) circuit breakers.
c. Branch circuits protected by shunt trip circuit breakers.
d. Branch circuits fed from feed-through protection of GFCI receptacles.
e. Branch circuits with dimming controls.
f. Branch circuits that serve emergency lighting equipment such as emergency batteries or emergency lighting unit equipment.
g. Where indicated by the wire counts shown on the Drawings.
2. Multiwire branch circuits (shared neutrals) are permitted where not otherwise indicated.
a. Locate all multiwire branch circuits in vertically adjacent panelboard pole spaces and provide circuit breaker handle ties to simultaneously disconnect all ungrounded circuit conductors.
D. Pull all conductors together into raceway at same time, do not damage conductors or exceed manufacturer's recommended maximum pulling tension or sidewall pressure, and use suitable wire pulling lubricant where recommended by the manufacturer.
E. Secure and support conductors and cables in accordance with NFPA 70 using supports and methods approved by the Authority Having Jurisdiction. Provide independent support from building structure; do not support from raceways, piping, ductwork, suspended ceiling support systems, or other systems and do not allow conductors or cables to lay on ceiling tiles.
F. Cut all cables per the manufacturer's recommendations and terminate using suitable fittings including anti-short, insulated bushings where applicable.
G. Provide a minimum of 12 inches of slack at each outlet. Provide a minimum of 5 feet of slack where conductors are installed in enclosures for future termination by others.
H. Neatly train and bundle conductors inside boxes, wireways, panelboards and other equipment enclosures.
I. Make wiring connections using specified wiring connectors and make splices and taps only in accessible boxes. Do not pull splices into raceways or make splices in conduit bodies.
J. Do not remove conductor strands to facilitate insertion into connector. Provide connectors suitable for reducing to appropriate size, but not less than required for the rating of the overcurrent protective device, where conductors are larger than the equipment terminations can accommodate.
K. Insulate splices and taps that are made with uninsulated connectors using insulating covers specifically designed for the connectors, or electrical tape for dry or damp locations. Use heat shrink tubing for wet locations.
L. Provide final connections to all equipment and devices, including those furnished by others, as required for a complete operating system.
M. Provide all control wiring and communications cabling, whether or not shown on the Drawings, per manufacturer's recommendations and as required for a complete and operational system.

END OF SECTION

## SECTION 260526 - GROUNDING AND BONDING

PART 1 GENERAL
1.01 MAXIMUM GROUNDING SYSTEM RESISTANCE: 5 ohms.

PART 2 PRODUCTS
2.01 ROD ELECTRODES: Copper, 3/4 inch diameter, 10 foot long solid rods. Sectional rods are not permitted.
2.02 CONCRETE ENCASED ELECTRODES: 4 AWG, 20 foot long bare copper wire.
2.03 WIRE: Copper wire sized to meet NFPA 70 requirements.
2.04 CONNECTORS AND ACCESSORIES: Copper, copper alloy, or bronze mechanical connectors.

PART 3 EXECUTION
3.01 INSTALLATION OF GROUNDING ELECTRODE SYSTEM
A. As applicable to the project, provide all components required for a complete grounding electrode system including bonding of metal underground water pipe, metal frame of the building, concrete-encased electrode, metal aboveground water piping system, metal aboveground gas piping system, and rod electrode(s) per NFPA 70 requirements.
3.02 INSTALLATION OF EQUIPMENT GROUNDING SYSTEM
A. Without exception, provide insulated equipment grounding conductor sized per NFPA 70 requirements within each feeder and branch circuit raceway and terminate each end on suitable lug, bus, or bushing.
3.03 INSTALLATION OF ISOLATED GROUNDING SYSTEM
A. Provide an additional isolated grounding conductor for circuits serving isolated ground receptacles. Isolated grounding conductors shall be isolated from the isolated grounding receptacle to the isolated ground bus in the upstream panelboard.
3.04 TESTING
A. Measure grounding resistance using Fall of Potential Method or Signal Injection Method. Provide additional rod electrodes as required to reduce grounding resistance to less than the specified maximum permitted value.

END OF SECTION

## SECTION 260529 - HANGERS AND SUPPORTS FOR ELECTRICAL SYSTEMS

PART 1 GENERAL - NOT USED

PART 2 PRODUCTS
2.01 HANGERS AND SUPPORTS
A. Corrosion-resistant materials of size and type adequate to carry the supported weight, including the weight of wire in conduit; do not use perforated pipe straps as a means of support.
2.02 ANCHORS AND FASTENERS
A. Use precast inserts, preset inserts, expansion anchors, or self-drilling anchors as approved by the Structural Engineer for concrete elements.
B. Use beam clamps, steel spring clips, steel ramset fasteners, or welded fasteners for steel elements.
C. Use toggle bolts or hollow wall fasteners for hollow masonry, plaster, and gypsum board partitions.
D. Use expansion anchors or preset inserts for solid masonry walls.
E. Use sheet metal screws for sheet metal elements and wood screws for wood elements.

PART 3 EXECUTION
3.01 INSTALLATION
A. Provide all required blocking and supplemental framing required to securely support all materials.
B. Fasten supports to building structure and surfaces only. Do not fasten supports to pipes, ducts, mechanical equipment, conduit, or ceiling suspension wires.
C. Obtain permission from Structural Engineer before drilling or cutting structural members or before using powder-actuated anchors.
D. Rigidly weld support members or use hex-bolts to present neat appearance with adequate strength and rigidity. Provide lock washers under all nuts.
E. Install surface-mounted cabinets and panelboards with minimum of four anchors.
F. Provide steel channel supports behind all cabinets and panelboards located in damp or wet locations to stand enclosures 1 inch off wall.
G. Provide supports for all low voltage wiring not routed in conduit.

END OF SECTION

## SECTION 260534 - CONDUIT AND WIREWAYS

PART 1 GENERAL - NOT USED

PART 2 PRODUCTS
2.01 CONDUIT
A. Size: As required by NFPA 70 for the conductors installed but no smaller than specified.
1. Sizes Indicated on the Drawings:
a. Any conduit sizes indicated to a utility transformer are based on Schedule 80 PVC conduit.
b. Any conduit sizes indicated to the primary or secondary of a dry-type transformer are based on Flexible Metal Conduit (FMC).
c. All other conduit sizes are based on Electrical Metallic Tubing (EMT).
d. The Contractor is responsible to adjust conduit sizes as required when a different conduit type is used.
B. Underground: 3/4 inch minimum rigid metal conduit, intermediate metal conduit, Schedule 80 PVC, or Schedule 40 PVC. Metal conduits shall be galvanized or PVC coated.
C. Outdoor Locations above Grade: 1/2 inch minimum rigid metal conduit or intermediate metal conduit. Nonmetallic conduit is not permitted above grade. Conduits shall be galvanized or PVC coated.
D. Within Slabs above Grade: 3/4 inch minimum rigid metal conduit, intermediate metal conduit, or Schedule 80 PVC. Metal conduits shall be galvanized or PVC coated. Coordinate with the Structural Engineer for restrictions and limitations on conduits installed in slabs above grade.
E. Exposed Wet and Damp Locations: 1/2 inch minimum rigid metal conduit or intermediate metal conduit. Conduits shall be galvanized or PVC coated.
F. Connections to Vibrating Equipment and Luminaires in Dry Locations: 1/2 inch minimum flexible metal conduit.
G. Connections to Vibrating Equipment and Luminaires in Damp and Wet Locations: 1/2 inch minimum liquidtight flexible metal conduit.
H. All Other Dry Locations: 1/2 inch minimum rigid metal conduit, intermediate metal conduit, or electrical metallic tubing.
2.02 FITTINGS: Provide listed fittings identified for use with the conduit.
2.03 WIREWAYS: Square D Class 5100 Type LDB for dry locations or Square D Class 5100 Type LDR for damp and wet locations unless indicated otherwise; size as required by NFPA 70 based on conductor fill and bending radius requirements.

PART 3 EXECUTION
3.01 INSTALLATION
A. Conceal all conduit in all interior and exterior areas, including exposed structure areas, unless the Architect provides specific approval permitting the use of exposed conduit.
B. Route any exposed conduit parallel and perpendicular to walls.
C. Subject to the Architect's approval, conduit located above ceilings is permitted to be routed point-to-point provided it is secured and supported per NFPA 70 requirements and complies with all applicable Codes and other requirements of the specifications.
D. Do not embed conduit in slabs-on-grade. Locate conduit a minimum of 2 inches below the bottom surface of the slab to avoid future damage from cutting of the floor slab.
E. Route conduit in slabs-above-grade from point-to-point. Do not cross conduits embedded in slabs.
F. Route underground conduit from point-to-point and at a burial depth in compliance with NFPA 70, local code, and utility company requirements.
G. Arrange conduit to maintain headroom and present neat appearance and arrange supports to prevent misalignment during wiring installation.
H. Secure and support all conduit in compliance with NFPA 70 requirements and group adjacent conduits on steel channel racks and trapezes.
I. Provide 12 inches of clearance between conduit and piping or surfaces with temperatures exceeding 104 degrees F.
J. Install no more than equivalent of three 90 degree bends between boxes.
K. Provide sleeves when penetrating footings, masonry walls and floors and seal all penetrations through footings and floors water tight.
L. Provide suitable fittings to accommodate expansion and deflection where conduit crosses seismic, control, and expansion joints.
M. Provide suitable pull string in each empty conduit except sleeves and nipples.
N. Provide caps to protect installed conduit against entrance of dirt and moisture.
O. Secure wireway to building surfaces and close ends of wireway and unused conduit openings.
P. Ground and bond conduit and wireways as required by NFPA 70.

END OF SECTION

## SECTION 260537 - BOXES

PART 1 GENERAL - NOT USED

PART 2 PRODUCTS
2.01 ALL BOXES
A. Nonmetallic boxes are not permitted unless indicated otherwise or without specific written approval from the Architect.
B. Provide all required box hangers and supports, extension rings, mud rings, etc. for a complete and secure installation.
C. Use gang boxes where more than one device is mounted together; do not use sectional boxes.
2.02 OUTLET AND SMALL JUNCTION BOXES
A. Dry and Damp Locations: Galvanized NEMA OS 1 stamped steel box rated for the weight of the equipment supported and sized per NFPA 70 requirements for the device(s) and conductors installed within.
B. Wet Locations: Galvanized cast metal NEMA FB 1 Type FD box with gasketed cover and threaded hubs and sized per NFPA 70 requirements for the device(s) and conductors installed within.
2.03 PULL AND LARGE JUNCTION BOXES
A. Dry and Damp Locations: Galvanized NEMA OS 1 stamped steel box sized per NFPA 70 requirements for the conductors installed within.
B. Wet Locations: Galvanized NEMA 250 Type 4 cast iron or cast aluminum box with ground flange, neoprene gasket, and stainless steel cover screws and sized per NFPA 70 requirements for the conductors installed within.

PART 3 EXECUTION
3.01 INSTALLATION
A. Install in locations indicated and as required for splices, taps, wire pulling, equipment connections, and as required by NFPA 70.
B. Install pull boxes and junction boxes above accessible ceilings and in unfinished areas only.
C. Install outlet boxes for all wall-mounted wiring devices at heights indicated in Section 262726 unless indicated otherwise. Coordinate mounting heights and locations of outlets mounted above counters, benches, and backsplashes prior to rough-in.
D. Use flush boxes in finished areas. Do not install flush boxes back-to-back in walls; provide minimum 6 inches and one stud separation.
E. Locate flush boxes in masonry walls to require cutting of masonry unit corner only. Coordinate masonry cutting to achieve neat opening.
F. Install all wall-mounted boxes plumb and level.
G. Install all ceiling-mounted boxes level and oriented parallel with building lines and ceiling grid tees where applicable.
H. Install all floor boxes level and oriented parallel with building lines and tile grout lines where applicable.
I. Vertically align adjacent wall mounted outlet boxes for switches, thermostats, similar devices.
J. Install concealed boxes within 6 inches from ceiling access panels, air distribution diffusers, or removable recessed luminaires.
K. Support boxes independently of conduit; do not support boxes from ceiling support wires.
L. Install knockout closures in unused box openings.
M. Install cover plates on boxes; see Section 262726 for cover plate specifications.
N. Ground and bond boxes as required by NFPA 70.

END OF SECTION

## SECTION 260553 - IDENTIFICATION FOR ELECTRICAL SYSTEMS

PART 1 GENERAL - NOT USED

PART 2 PRODUCTS
2.01 NAMEPLATES: Engraved laminated plastic with 1/8 inch letters on contrasting background.
2.02 LABELS: As required by regulatory agencies.
2.03 WIRE MARKERS: Cloth, tape, split sleeve, or tubing type.

PART 3 EXECUTION
3.01 NAMEPLATES: Provide nameplates with the unique equipment designation at each electrical distribution and control equipment enclosure, communication cabinet, and control device station.
3.02 WARNING LABELS: Provide all regulatory required and industry standard warning labels on all electrical equipment, including high-voltage, tested series rated combination, and arc flash hazard labeling.
3.03 WIRE MARKERS: Provide wire and cable markers at panelboard gutters, pull boxes, outlet boxes, and junction boxes for each load connection. Indicate branch circuit or feeder number indicated on Drawings and control wire number indicated on shop drawings.
3.04 COLOR CODE LEGEND: Provide identification label identifying conductor color codes at each piece of feeder or branch-circuit distribution equipment.
3.05 INSTALLATION
A. Install nameplates and labels parallel to equipment lines.
B. Secure nameplates for distribution equipment visible to the public to the inside surface of door.
C. Secure nameplates for distribution equipment not visible to the public to the front of the enclosure using screws, rivets, or adhesive.

END OF SECTION

## SECTION 260595 - FIRE STOPPING

PART 1 GENERAL
1.01 PREPARATION: Examine the complete set of Drawings and identify all fire rated partitions, floors and assemblies and identify appropriate firestopping method for the assembly.

PART 2 PRODUCTS
2.01 FIRESTOPPING ASSEMBLIES: Use only systems listed by UL or FM or tested in accordance with ASTM E 814 or ASTM E 119 that have F Rating equal to fire rating of penetrated assembly and minimum T Rating Equal to F Rating.
2.02 MATERIALS: Elastomeric silicone firestopping, foam firestopping, fibered compound firestopping, fiber packing material, mechanical firestop devices, intumescent putty, and firestop pillows are permitted.

PART 3 EXECUTION
3.01 INSTALLATION
A. Comply with firestopping manufacturer's recommendations for temperature and other environmental conditions before, during, and after installation. Provide ventilation in areas where solvent-cured materials are being installed.
B. Protect adjacent surfaces from damage by material installation.
C. Clean substrate surfaces of dirt, dust, grease, oil, loose material, or other matter which may affect bond of firestopping material. Remove incompatible materials which may affect bond. Install backing materials to arrest liquid material leakage.
D. Apply the appropriate fire stopping materials and systems to maintain the fire rating of the partition, floor, or ceiling assembly being penetrated.
E. Install materials in manner described in fire test report and in accordance with manufacturer's instructions, completely closing openings.
F. Do not cover installed firestopping until inspected by Authority Having Jurisdiction.
G. Install any labeling required by Code.
H. Clean adjacent surfaces of firestopping materials.

END OF SECTION

## SECTION 260919 - CONTACTORS AND RELAYS

PART 1 GENERAL - NOT USED

PART 2 PRODUCTS
2.01 CONTACTORS
A. Description: Square D Class 8903, Type L or Type S unless indicated otherwise or otherwise required.
B. Contacts:
1. Provide with quantity of normally open and normally closed contacts as required and a minimum of two spare poles.
a. Provide multiple contactors connected in parallel with one another when the number of contacts required exceeds the maximum capability of a single contactor.
2. Coordinate contact rating to match branch circuit overcurrent protection, considering derating for continuous loads, but no less than 30 amps.
C. Coil: Coordinate with the voltage of the control circuit.
D. Enclosure: Manufacturer's standard enclosure suitable for the environment in which the contactor is installed.
2.02 RELAYS
A. Description: Square D Class 8501 Type C unless indicated otherwise or otherwise required.
B. Contacts: Form C contacts rated at 30 amperes unless indicated otherwise.
C. Coil: Coordinate with the voltage of the control circuit.
D. Enclosure: Manufacturer's standard enclosure suitable for the environment in which the relay is installed.

PART 3 EXECUTION
3.01 INSTALLATION
A. Install individual controls and relays in enclosures adjacent to panelboard serving controlled circuits and make electrical wiring interconnections.
B. Provide all relays, contactors, interposing relays, and controls that are required but may not be shown to switch the loads in the manner indicated on the Drawings.
C. Provide nameplate for contactors indicating contactor number.

END OF SECTION

## SECTION 260923 - LIGHTING CONTROL DEVICES

PART 1 GENERAL
1.01 PREPARATION
A. Hold meeting with the Owner prior to commencing work.
1. Review zoning and make adjustments requested by the Owner.
2. Determine all timeclock settings such as ON and OFF times for each day of the week, holiday settings, latitude and longitude of the project site for astronomic features, etc.
3. Determine all control settings such as on and off triggers, blink warnings, sweep settings, switch programming, etc.

PART 2 PRODUCTS
2.01 ALL LIGHTING CONTROL DEVICES
A. Provide all required conduit, wiring, connectors, hardware, components, accessories, etc. as required for a complete operating system.
B. All sensors shall be suitable for the geometrical and environmental characteristics of the associated space and be suitable for the floor area to be covered. Provide multiple sensors when necessary to meet the required room coverage.
2.02 INDOOR OCCUPANCY SENSORS
A. Wall Switch:
1. Single-Relay: Wattstopper #DSW-301 unless indicated otherwise.
2. Dual-Relay: Wattstopper #DSW-302 unless indicated otherwise.
3. Finish: As selected by the Architect.
B. Combination Wall Switch / Dimmer:
1. 0-10V Dimming: Wattstopper #DW-311 unless indicated otherwise; finish as selected by the Architect.
C. Wall-Mounted:
1. Sensor: Wattstopper #DT-200 unless indicated otherwise.
2. Power Pack: Wattstopper #BZ-150 unless indicated otherwise.
3. Finish: White.
D. Ceiling-Mounted:
1. Sensor: Wattstopper #DT-300 unless indicated otherwise.
2. Power Pack: Wattstopper #BZ-150 unless indicated otherwise.
3. Finish: White.
E. Accessories: Provide heavy duty coated steel wire protective guards compatible with specified occupancy sensors where subject to impact.
2.03 OUTDOOR MOTION SENSORS
A. Wall-Mounted for Switching:
1. Sensor: Wattstopper #EW-200 unless indicated otherwise.
2. Finish: As selected by the Architect.
B. Wall-Mounted for 0-10 Volt Dimming:
1. Sensor: Wattstopper #FSP-211 unless indicated otherwise.
2. Lens: Wattstopper #FSP-L* as required for the application.
3. Finish: White.
4. Configuration Tool: Wattstopper #FSIR-100 unless indicated otherwise.
2.04 TIMECLOCKS
A. Tork DZS series unless indicated otherwise.
B. Input Voltage: Coordinate with the voltage of the control circuit.
C. Enclosure: Manufacturer's standard enclosure suitable for the environment in which the timeclock is installed.
2.05 TIMER SWITCHES: Tork #SS403 unless indicated otherwise.
2.06 OUTDOOR PHOTOCELLS: Tork #2101 unless indicated otherwise.
2.07 INDOOR SWITCHING PHOTOSENSORS
A. Sensor: Wattstopper #LS-102 unless indicated otherwise.
B. Power Pack: Wattstopper #BZ-150 unless indicated otherwise.
C. Finish: White.
2.08 INDOOR 0-10 VOLT DIMMING PHOTOSENSORS
A. Sensor: Wattstopper #LS-301 unless indicated otherwise.
B. Power Pack: Wattstopper #BZ-150 unless indicated otherwise.
C. Finish: White.
D. Configuration Tool: Wattstopper #LSR-301-S unless indicated otherwise.
E. Remote Control: Wattstopper #LSR-301-P unless indicated otherwise.
2.09 DISTRIBUTED LIGHTING CONTROL SYSTEMS
A. Room Controllers:
1. Switching:
a. Single-Relay: Wattstopper #LMRC-101 unless indicated otherwise.
b. Dual-Relay: Wattstopper #LMRC-102 unless indicated otherwise.
2. 0-10 Volt Dimming:
a. Single-Relay: Wattstopper #LMRC-211 unless indicated otherwise.
b. Dual-Relay: Wattstopper #LMRC-212 unless indicated otherwise.
c. Three-Relay: Wattstopper #LMRC-213 unless indicated otherwise.
3. Forward Phase Dimming:
a. Single-Relay: Wattstopper #LMRC-221 unless indicated otherwise.
b. Dual-Relay: Wattstopper #LMRC-222 unless indicated otherwise.
B. Plug Load Controllers: Wattstopper #LMPL-101 unless indicated otherwise.
C. Occupancy Sensors:
1. 1-Button Wall Switch: Wattstopper #LMDW-101 unless indicated otherwise; color as selected by the Architect.
2. 2-Button Wall Switch: Wattstopper #LMDW-102 unless indicated otherwise; color as selected by the Architect.
3. Corner-Mount: Wattstopper #LMDX-100 unless indicated otherwise.
4. Ceiling-Mount: Wattstopper #LMDC-100 unless indicated otherwise.
D. Wall Switches:
1. Multi-Button: Wattstopper LMSW-100 series unless indicated otherwise with number of buttons as required for the application; color as selected by the Architect.
2. Dimming: Wattstopper #LMDM-101 unless indicated otherwise; color as selected by the Architect.
3. Scene Selection: Wattstopper #LMSW-105 unless indicated otherwise; color as selected by the Architect.
E. Dimming Photosensors:
1. For Sidelit Daylight Zones: Wattstopper #LMLS-400 unless indicated otherwise.
2. For Toplit Daylight Zones: Wattstopper #LMLS-500 unless indicated otherwise.
F. Accessories:
1. Cable: Wattstopper #LMRJ in lengths required unless indicated otherwise; plenum rated when not installed in conduit.
2. Wireless Configuration Tool: Wattstopper #LMCT-100 unless indicated otherwise.
2.10 EMERGENCY LIGHTING CONTROLS
A. Projects with Generators or Inverters which are Owned by the Project Owner:
1. Provide Hubbell Control Solutions #ALCR1277 or equal UL 924 Listed automatic load control relays as required for each control zone to accomplish the following sequence:
a. Bypass all ON/OFF controls associated with the control zone, including all switches, relays, and contactors.
b. Bring all emergency luminaires to 100 percent light output.
2. Where phase control dimming is used, provide a separate phase control dimmer(s) for normal and emergency lighting.
3. Where 0-10 volt dimming is not used, the load control relay is permitted to be a Wattstopper #ELCU-200 or equal.
B. Projects with Generators or Inverters which are not Owned by the Project Owner:
1. Provide Bodine #GTD20A or equal UL 1008 Listed branch circuit emergency lighting transfer switches as required for each control zone to accomplish the following sequence:
a. Transfer circuit from Project Owner source to emergency power source.
b. Bypass all ON/OFF controls associated with the control zone, including all switches, relays, and contactors.
c. Bring all emergency luminaires to 100 percent light output.

PART 3 EXECUTION
3.01 GENERAL INSTALLATION REQUIREMENTS
A. Provide all control wiring and communications cabling, whether or not shown on the Drawings, per manufacturer's recommendations and as required for a complete and operational system.
B. Program the entire system as established in meeting with the Owner.
3.02 INSTALLATION OF TIMECLOCKS
A. Install timeclocks adjacent to panelboard serving controlled circuits and make electrical wiring interconnections.
B. Provide all relays, contactors, interposing relays, and controls that are required but may not be shown to switch the loads in the manner indicated on the Drawings.
C. Provide nameplate for timeclocks indicating timeclock number.
3.03 INSTALLATION OF OCCUPANCY SENSORS AND MOTION SENSORS
A. Location Adjustments: Locations indicated are diagrammatic and only intended to indicate which rooms or areas require devices. Provide quantity and locations as required for complete coverage of respective room or area based on manufacturer's recommendations for installed devices.
B. Install ultrasonic and dual technology occupancy sensors a minimum of 4 feet from air supply ducts or other sources of heavy air flow and as per manufacturer's recommendations, in order to minimize false triggers.
C. Program occupancy sensors as MANUAL-ON, AUTOMATIC-OFF unless indicated otherwise.
D. Mask sensor lenses using the manufacturer's masking material as required to prevent false triggers.
E. Adjust position of directional occupancy sensors and outdoor motion sensors to achieve optimal coverage as required.
3.04 INSTALLATION OF INDOOR PHOTOSENSORS
A. Location Adjustments: Locations indicated are diagrammatic and only intended to indicate which rooms or areas require devices. Provide quantity and locations as required for complete coverage of respective room or area based on manufacturer's recommendations for installed devices.
B. Install closed-loop photosensors to accurately measure the light level at the designated task location while minimizing the measured amount of direct light from natural or artificial sources.
C. Install open-loop photosensors to accurately measure the level of daylight coming into the space while minimizing the measured amount of lighting from artificial sources.
D. Calibrate dimming photosensors such that 100% artificial light output is provided only when completely dark outside and the controlled lighting dims commensurately with the amount of natural daylight contribution to the satisfaction of the Owner. Calibration shall occur after all room finishes, furniture, and window treatments have been installed.
3.05 INSTALLATION OF POWER PACKS
A. Install power packs on junction box in accessible location above ceiling at the associated sensor.
B. Do not switch power serving power packs. All required switching shall occur on the load side of the power pack relay.
3.06 INSTALLATION OF OUTDOOR PHOTOCELLS
A. Install photocell facing north with unobstructed view.
B. Install such that photocell does not face artificial light sources including light sources controlled by the photocell itself.
C. Weatherproof all connections. Do not install photocell with conduit stem facing up to prevent infiltration of water.
D. Adjust external sliding shields under optimum lighting conditions to achieve desired turn-on and turn-off activation.
3.07 INSTALLATION OF ROOM CONTROLLERS AND PLUG LOAD CONTROLLERS
A. Install controllers in concealed accessible locations above ceilings.
B. Do not switch power serving controllers. All required switching shall occur on the load side of the controller relay(s).
C. Provide nameplate for each controller indicating room(s) controlled.
D. Install room controller wall-mounted switches 46 inches above finished floor to the centerline of the box unless indicated otherwise.
3.08 CLOSEOUT
A. Demonstrate proper operation of lighting control devices to the Owner and correct deficiencies or make adjustments as directed.
B. Train Owner's personnel on operation, adjustment, programming, and maintenance of lighting control devices.
C. Provide a written report of all program settings and photosensor settings to the Owner.

END OF SECTION

## SECTION 262416 - PANELBOARDS

PART 1 GENERAL - NOT USED

PART 2 PRODUCTS
2.01 LIGHTING AND APPLIANCE PANELBOARDS
A. Description: Square D Type NQ for 240 Volt Class and Square D Type NF for 600 Volt Class unless indicated otherwise.
B. Voltage, Phase, and Current Ratings: As indicated or otherwise required.
C. Short-Circuit Current Rating (SCCR): No less than the available fault current. The Contractor shall determine the available fault current where not indicated on the Drawings.
D. Bussing: As indicated.
E. Bonded Equipment Ground Bar: Provide for each panelboard.
F. Isolated Ground Bar: Provide for each panelboard that serves isolated ground loads.
G. Enclosure: Manufacturer's standard enclosure suitable for the environment in which the panelboard is installed; 5.75 inches deep, 20 inches wide unless indicated otherwise; surface or flush mounted as indicated.
H. Cabinet Front: Surface or flush type as indicated with hinged door, flush lock, metal directory frame and finished in manufacturer's standard enamel.
I. Circuit Breakers:
1. Bolt-on thermal-magnetic molded case circuit breakers with common trip handle for all poles.
a. Provide Type SWD for lighting circuits.
b. Provide Type HACR for heating, air-conditioning, and refrigeration equipment circuits.
c. Provide Class A ground-fault circuit interrupter (GFCI) where indicated or otherwise required.
d. Provide ground-fault protection of equipment (GFPE) where serving heat tracing or otherwise required.
e. Provide combination type arc-fault circuit interrupter (AFCI) where indicated or otherwise required.
f. Provide dual-rated combination type arc-fault circuit interrupter (AFCI) and Class A ground-fault circuit interrupter (GFCI) where indicated or otherwise required.
2. Accessories:
a. Provide handle ties for circuit breakers serving multiwire branch circuits.
b. Provide Square D #HLO1 handle clamps for circuit breakers denoted as "HLO" and for all fire protection and fire alarm equipment and all circuits serving emergency lighting.
c. Provide Square D #QO*PAF fixed handle padlock attachment for circuit breakers denoted as "HPL" and for appliances without a local disconnecting means.
d. Provide shunt trip were denoted as "ST" or otherwise required.
3. Amp Interrupting Capacity (AIC) Rating: No less than the available fault current; fully rated or manufacturer tested series combination. The Contractor shall determine the available fault current where not indicated on the Drawings.
4. Do not use multi-pole circuit breakers that mount in a 1-pole circuit breaker space (i.e. half-size circuit breakers).
2.02 POWER DISTRIBUTION PANELBOARDS
A. Description: Square D Class 2110, I-Line Type unless indicated otherwise.
B. Voltage, Phase, and Current Ratings: As indicated or otherwise required.
C. Short-Circuit Current Rating (SCCR): No less than the available fault current. The Contractor shall determine the available fault current where not indicated on the Drawings.
D. Bussing: Aluminum or copper.
1. Provide fully rated busses throughout the panelboard; tapered busses are not permitted.
2. Equip each section with vertical busses that fully extend from the bottom to the top of the panelboard.
E. Ground Bus: Extend length of panelboard.
F. Enclosure: Manufacturer's standard enclosure suitable for the environment in which the panelboard is installed; surface or flush mounted as indicated.
G. Cabinet Front: Surface or flush type as indicated with hinged door, flush lock, metal directory frame and finished in manufacturer's standard enamel.
H. Future Provisions:
1. Provide additional overcurrent protection device mounting space for a minimum of two future 200 amp overcurrent protection devices.
I. Circuit Breakers:
1. Thermal-magnetic molded case circuit breakers with common trip handle for all poles.
a. Provide Type HACR for heating, air-conditioning, and refrigeration equipment circuits.
b. Provide arc energy-reducing maintenance switch with local status indicator for each circuit breaker rated 1,200 amps or more.
2. Accessories:
a. Provide shunt trip were denoted as "ST" or otherwise required.
3. Amp Interrupting Capacity (AIC) Rating: No less than the available fault current; fully rated or manufacturer tested series combination. The Contractor shall determine the available fault current where not indicated on the Drawings.

PART 3 EXECUTION
3.01 INSTALLATION
A. Install panelboards 6 feet to top of panelboard but no less than 4 inches above floor.
B. Provide 4 inch thick concrete housekeeping pad for surface-mounted panelboards installed within 4 inches of the floor.
C. Provide filler plates for unused spaces in panelboards.
D. Provide typed circuit directory and nameplate for each panelboard. Revise directory to reflect circuiting changes required to balance phase loads.
E. Provide five 1 inch spare conduits out of each flush-mounted panelboard to an accessible location above ceiling. Identify each as SPARE.
F. Measure steady state load currents at each panelboard feeder and rearrange circuits as required to balance the phase loads to within 10 percent maximum imbalance. Maintain proper phasing for multiwire branch circuits.
G. Provide nameplate indicating panelboard equipment designation for each panelboard.

END OF SECTION

## SECTION 262701 - ELECTRICAL SERVICE ENTRANCE

PART 1 GENERAL
1.01 PRE-INSTALLATION MEETING: Convene with utility company one month prior to commencing

RELEASE FOR CONSTRUCTION
AS NOTED ON PLANS REVIEW
DEVELOPMENT SERVICES
LEE'S SUMMIT, MISSOURI
03/10/2021


Bergmeyer
www.bergmeyer.com
BOS
51 Sleeper St.
6th Floor
Boston, MA 02210
617.542.1025
LA
800 South Figueroa St.
Suite 1080
Los Angeles, CA 90017
212.337.1090

CONSULTANTS:
Schnackel engineers
800-581-0963
www.schnackel.com
SE JOB#: 200383

SEAL/ SIGNATURE:
STATE OF MISSOURI
GREGORY ROY SCHNACKEL
NUMBER
E-026570
REGISTERED PROFESSIONAL ENGINEER
Date: 03/05/21
COA #: E-2009006642


| NO. | BY | DATE | DESCRIPTION |
|---|---|---|---|
| 1 | | 2021-03-09 | ADDENDUM #1 |
| | | 2021-01-11 | PERMIT/BID SET |
| | | 2020-12-21 | 75% SET |
| | | 2020-10-12 | DD SET |

SHAKE SHACK

SHAKE SHACK - LEE'S SUMMIT MO

LEE'S SUMMIT
MISSOURI
SHACK #1348

PERMIT/BID SET

ELECTRICAL SPECIFICATIONS

DRAWN BY: AEH
CHECKED BY: GRS
JOB NO: 20068.00

E590

work to review and coordinate all requirements and details.

PART 2 PRODUCTS
2.01 INSTRUMENT TRANSFORMER CABINET: Sheet metal cabinet with hinged door, provisions for locking and sealing, and conforming to all utility company requirements; size as required by utility company.
2.02 METER SOCKET: Furnished by utility company or the Electrical Contractor as specified by the utility company.
2.03 UTILITY TRANSFORMER PAD: Prefabricated precast concrete or cast-in-place transformer pad sized as required by the utility company. Construct in strict conformance with the utility company standards.
2.04 OTHER COMPONENTS: Provide all conduits, boxes, accessories, and components as required by utility company for a complete, functional, and safe installation.

PART 3 EXECUTION
3.01 PREPARATION
A. Arrange with utility company to obtain permanent electric service.
3.02 INSTALLATION
A. Install weatherhead, transformer pad, instrument transformer cabinets, and meter socket as required by utility company.
B. Comply with all utility company metering, installation, and service requirements; utility company requirements supersede any requirements indicated on the Drawings or within the Specifications.

**END OF SECTION**

## SECTION 262717 - EQUIPMENT WIRING

PART 1 GENERAL
1.01 COORDINATION WITH OTHER TRADES
A. Meet with all other trades before commencing any work and obtain and review shop drawings, product data, manufacturer's wiring diagrams, and manufacturer's instructions for equipment furnished under other Sections.
1. Determine all equipment connection locations and requirements and verify that proper power supply is available prior to subcontractor's ordering equipment.
2. Sequence rough-in of electrical connections to coordinate with installation of equipment.
3. Sequence electrical connections to coordinate with start-up of equipment.
B. Verify and coordinate all requirements and installation details of all materials and equipment prior to rough-in.
C. Verify proper voltage, phase, and current rating of power supply and immediately report any discrepancies.
D. Responsibility for verification of proper power supply voltage and any damage resulting from incorrect connections shall rest with this Contractor.
E. Any conflicts arising from lack of coordination shall be this Contractor's responsibility.

PART 2 PRODUCTS
2.01 CORDS
A. Description: Multi-conductor flexible cord Type SO for dry and damp locations or Type SOW in wet locations.
B. Conductor Quantity: As required for the load served; include identified equipment grounding conductor.
C. Conductor Insulation Rating: As required for the voltage of the load served.
D. Conductor Ampacity: No less than the rating of the overcurrent protection device protecting the circuit.
2.02 CORD CAPS: Match cord cap to receptacle configuration at outlet provided for equipment.
2.03 OTHER MATERIALS: Provide all disconnect switches, wiring devices, conduit, wire and cable, and boxes required.

PART 3 EXECUTION
3.01 ELECTRICAL CONNECTIONS
A. Make electrical connections in accordance with equipment manufacturer's instructions.
B. Make conduit connections to equipment using flexible conduit. Use liquidtight flexible conduit with watertight connectors in damp or wet locations.
C. Connect heat producing equipment using wire and cable with insulation suitable for temperatures encountered.
D. Provide receptacle outlet to accommodate connection with attachment plug.
E. Provide cord and cap where field-supplied attachment plug is required.
F. Install suitable strain-relief clamps and fittings for cord connections at outlet boxes and equipment connection boxes.
G. Install disconnect switches, controllers, control stations, and control devices to complete equipment wiring requirements.
H. Install terminal block jumpers to complete equipment wiring requirements.
I. Install interconnecting conduit and wiring between devices and equipment to complete equipment wiring requirements.
J. Cut and seal conduit openings in freezer and cooler walls, floors, and ceilings where applicable.

**END OF SECTION**

## SECTION 262726 - WIRING DEVICES

PART 1 GENERAL
1.01 PREPARATION: Contact the Architect to determine colors of all wiring devices, cover plates, and carpet and tile flanges, locations where stainless steel cover plates are required, and locations where carpet and tile flanges are required.

PART 2 PRODUCTS
2.01 RECEPTACLES
A. All Receptacles:
1. Color as selected by Architect.
2. Provide tamper-resistant receptacles where denoted "TR" on the Drawings and otherwise required.
3. Provide ground-fault circuit interrupter receptacles where denoted "GFCI" on the Drawings and otherwise required.
4. Provide receptacles with factory-applied permanent controlled receptacle marking where denoted "CR" on the Drawings and where controlled by automatic shutoff controls.
a. Field-applied controlled receptacle markings, such as those made by a label maker, are not acceptable.
5. Provide NEMA receptacle indicated with two integral Type A, 5 ampere, 5 volt USB ports where denoted "USB" on the Drawings.
6. Provide identified weather-resistant receptacles for receptacles installed outdoors.
7. NEMA 5-15R unless indicated otherwise.
B. Standard NEMA 5-15R Duplex: Hubbell #BR15 unless indicated otherwise.
C. Standard NEMA 5-20R Duplex: Hubbell #BR20 unless indicated otherwise.
D. Interior GFCI Duplex: Hubbell #GF20 unless indicated otherwise.
1. Provide GFCI receptacles with audible alarm when the receptacle serves a sump pump.
E. Exterior GFCI Duplex: Hubbell #GFTR20 unless indicated otherwise.
F. Isolated Ground Duplex: Hubbell #IG20CR unless indicated otherwise.
G. Surge Protection Receptacles: Hubbell #HBL5362SA unless indicated otherwise.
H. Clock Hanger Receptacles: Hubbell #HBL5235 unless indicated otherwise.
I. Other NEMA Configurations: As required by the load served.
2.02 FACELESS GFCI: Hubbell #GFBFST20; color as selected by Architect.
2.03 MULTI-OUTLET ASSEMBLY: Wiremold Plugmold 2000 Series with receptacles at 6 inches on center unless indicated otherwise. Provide all fittings required for a complete installation. Coordinate device and channel finish color with the Architect.
2.04 WALL SWITCHES
A. All Switches:
1. Color as selected by Architect.
2. Horsepower rated when used as motor disconnecting means.
B. Single Pole Toggle: Hubbell #1221 unless indicated otherwise.
C. Three-Way Toggle: Hubbell #1223 unless indicated otherwise.
D. Four-Way Toggle: Hubbell #1224 unless indicated otherwise.
E. Single Pole Toggle with Pilot Light: Hubbell #HBL1221PLC unless indicated otherwise.
F. Single Pole Keyed: Hubbell #HBL1221L unless indicated otherwise.
G. Three-Way Keyed: Hubbell #HBL1223L unless indicated otherwise.
H. Four-Way Keyed: Hubbell #HBL1224L unless indicated otherwise.
2.05 WALLBOX DIMMERS
A. All Wallbox Dimmers: Color as selected by Architect.
B. LED Dimmers:
1. All LED Dimmers: Dimmer utilized shall be tested and listed by the LED manufacturer as a compatible dimmer.
2. 0-10 Volt Dimmers:
a. Up to 16 Amps: Lutron Maestro #MAF-6AM with Lutron #GRX-TVI power interface unless indicated otherwise.
3. Electronic Low Voltage Dimmers:
a. Up to 16 Amps: Lutron Maestro #MAF-6AM with Lutron #PHPM-WBX-DV-WH power interface unless indicated otherwise.
4. Magnetic Low Voltage Dimmers
a. Up to 16 Amps: Lutron Maestro #MAF-6AM with Lutron #PHPM-WBX-DV-WH power interface unless indicated otherwise.
2.06 COVER PLATES
A. All Cover Plates:
1. Color and material as selected by Architect.
2. Provide cover plates appropriate for the wiring devices installed within the box.
a. Use combination plates when wiring devices are ganged together.
B. Wall Plates:
1. Provide standard-size nylon wall plates unless indicated otherwise; mid-size or jumbo wall plates are not permitted.
2. Provide stainless steel coverplates where requested by the Architect.
3. Provide galvanized steel cover plates on outlet boxes and junction boxes located in unfinished areas, above accessible ceilings, and on surface mounted outlets.
4. Provide gasketed, cast metal, hinged cover plates for all exterior locations, where denoted "WP" on the Drawings, and where otherwise required.
5. Provide weatherproof while-in-use covers which are listed and identified as "extra-duty" for all receptacles installed in wet locations.

PART 3 EXECUTION
3.01 EXAMINATION: Verify that outlet boxes are installed at proper heights and that openings are neatly cut and will be completely covered by the coverplates or flanges.
3.02 PREPARATION
A. Provide extension rings to bring wall-mounted outlet boxes flush with finished surface.
B. Adjust floor boxes to bring floor boxes flush with finished floor.
3.03 MOUNTING HEIGHTS
A. General: All mounting heights are to the centerline of the outlet box.
B. Receptacles:
1. Install receptacles at 18 inches above finished floor unless indicated otherwise.
2. Install receptacles at countertops at the lesser of 44 inches above finished floor or 3 inches above any sidesplashes or backsplashes unless indicated otherwise.
C. Wall Switches: Install wall switches including wallbox dimmers, wall switch occupancy sensors, and low voltage switches associated with programmable relay panels and room controllers at 46 inches above finished floor unless indicated otherwise.
D. Telecommunications Outlets:
1. Install telecommunications outlets including telephone, data, and television outlets 18 inches above finished floor unless indicated otherwise.
2. Install telephone outlets for side-reach and forward-reach wall telephone 46 inches above finished floor unless indicated otherwise.
E. Modify mounting heights in masonry walls as required to locate the outlet box at the joint in the masonry unit to avoid multiple or split-cut masonry units.
3.04 INSTALLATION
A. Install wall switches with OFF position down.
B. Install receptacles vertically with ground pin on bottom unless indicated otherwise.
C. Ground-Fault Circuit Interrupter (GFCI) Receptacles:
1. Provide a separate GFCI receptacle for every instance where denoted "GFCI" on the Drawings and otherwise required by Code; do not GFCI-protect receptacles from the load side of an upstream GFCI receptacle.
2. Install all GFCI receptacles in a readily accessible location.
a. Provide faceless GFCI device in a readily accessible location when the receptacle will not be readily accessible and connect receptacle to load side of faceless GFCI.
D. Wallbox Dimmers:
1. Install wallbox dimmers to achieve full rating; do not break heatsink fins off.
2. Install power interfaces in concealed accessible location.
3. Provide a separate neutral conductor for each branch circuit serving wallbox dimmers; do not connect wallbox dimmers to multiwire branch circuits.
4. Provide all control wiring and communications cabling including all 0-10V control wiring, whether or not shown on the Drawings, per manufacturer's recommendations and as required for a complete and operational system.
E. Install wiring devices in outlet boxes and connect wiring device grounding terminal to branch circuit equipment grounding conductor.
F. Connect wiring devices by wrapping conductor around screw terminal; do not use back-wired push-in terminals.
G. Install cover plates on all outlet boxes including blank outlets.
H. Use flat-head screws, clips, and straps to fasten multi-outlet assembly channel to surfaces and use suitable insulating bushings and inserts at connections to outlets and corner fittings.

**END OF SECTION**

## SECTION 262813 - FUSES

PART 1 GENERAL - NOT USED

PART 2 PRODUCTS
2.01 FUSES:
A. Up to 600 Amps: Dual-element time-delay Class RK1 unless indicated otherwise or otherwise required for the switch in which the fuse is installed.
B. Greater than 600 Amps: Dual-element time-delay Class L unless indicated otherwise indicated otherwise or otherwise required for the switch in which the fuse is installed.
C. Site Lighting: Class CC with in-line fuseholder.

PART 3 EXECUTION
3.01 INSTALLATION
A. Install fuses with label oriented such that manufacturer, type, and size are easily read.

**END OF SECTION**

## SECTION 262818 - ENCLOSED SWITCHES

PART 1 GENERAL - NOT USED

PART 2 PRODUCTS
2.01 SAFETY SWITCHES
A. 240 Volt Class: Square D Class 3130 general duty unless indicated otherwise.
B. 600 Volt Class: Square D Class 3110 heavy duty unless indicated otherwise.
C. Voltage, Phase, and Current Ratings: As indicated or otherwise required.
D. Fuse Clips: Class R cartridge fuse clips where fuses are installed.
E. Enclosure: Manufacturer's standard enclosure suitable for the environment in which the switch is installed.
F. Accessories: Provide grounding kit for all enclosed switches.
2.02 BOX COVER UNITS: Bussmann #SSU unless indicated otherwise.

PART 3 EXECUTION
3.01 INSTALLATION
A. All Enclosed Switches:
1. Install in locations that provide all working space required by NFPA 70.
2. Install 5 feet to the operating handle.
3. Install fuses in fusible disconnect switches.
4. Provide nameplate indicating equipment designation, NEMA fuse class, and fuse size installed.

**END OF SECTION**

## SECTION 264313 - SURGE PROTECTIVE DEVICES

PART 1 GENERAL - NOT USED

PART 2 PRODUCTS
2.01 SURGE PROTECTION DEVICES
A. Description: Square D Surgelogic EMA series Type 2 surge protective device with the following ratings unless indicated otherwise:
1. Minimum Peak Surge Current Rating:
a. Service Entrance Equipment: 240 kA per phase
b. Power Distribution Panelboards: 160 kA per phase
c. Branch Panelboards: 120 kA per phase
2. Maximum Voltage Protection Ratings:
a. 120/208 Volt, 3 Phase, 4 Wire Systems:
1. L-N: 700 volts.
2. L-G: 700 volts.
3. N-G: 700 volts.
4. L-L: 1200 volts.
3. Enclosure: Manufacturer's standard enclosure with integral disconnect switch and suitable for the environment in which the surge protective device is installed.

PART 3 EXECUTION
3.01 INSTALLATION
A. Install surge protective devices directly adjacent to and within 6 inches of the associated switchboard or panelboard to keep conductor length absolutely minimized.
B. Comply with manufacturer's written recommendations for conductor and overcurrent protection device size for connecting surge protective devices to the electrical distribution system.
C. Install wiring between surge protective device and associated overcurrent protection device as short and straight as possible. Do not exceed manufacturer's recommended lead length.
D. Coordinate location to allow adequate clearances for maintenance.
E. Do not bond neutral and ground.
F. Do not integrate surge protective device within switchboards or panelboards unless indicated otherwise; see IEEE-1100 Section 8.4.2.5.
G. Do not energize or connect electrical system distribution equipment to their sources until surge protective devices are installed and connected.
H. Disconnect all surge protective devices before performing any Megger or high-potential testing of electrical distribution equipment.

**END OF SECTION**

## SECTION 265100 - INTERIOR LIGHTING

PART 1 GENERAL
1.01 QUALITY ASSURANCE
A. Verify all ceiling systems for proper coordination of luminaires and accessories including any drywall frames, bar hangers, flanges, trim rings, etc. required for a complete, finished installation.
B. Provide only luminaires that are listed for the environment in which they are installed.
1. Luminaires shall carry damp location and/or wet location ratings as required.
2. Luminaires shall be insulated ceiling (IC) rated when recessed into insulated ceilings; coordinate locations of all insulated ceilings with the Architectural plans.
C. Coordinate exact locations of all luminaires with the Architectural Reflected Ceiling Plan(s); luminaire locations on the Architectural Reflected Ceiling Plan(s) take precedence over locations indicated on the electrical lighting plans.
D. Coordinate mounting heights of all wall-mounted luminaires with the Architect prior to rough-in.
E. Confirm all luminaire and accessory finishes with the Architect prior to ordering.
F. Coordinate luminaire dimensions with the wall and/or ceiling thickness prior to ordering.
G. Coordinate mounting location, number of faces, and directional arrows of exit signs as required to mark paths of egress to the satisfaction of the Authority Having Jurisdiction.

PART 2 PRODUCTS
2.01 LUMINAIRES
A. Provide as indicated on the Drawings.
B. The acceptability of any substitute fixtures lies solely with the Architect and Engineer.
C. The specified luminaire shall be provided at no additional cost where a substitute fixture is not accepted by the Architect or Engineer.
2.02 NON-DIMMING BALLASTS, TRANSFORMERS, AND DRIVERS
A. All Ballasts, Transformers, and Drivers
1. Provide low-temperature ballasts when installed in locations where ambient temperature can fall below 10 degrees C (50 degrees F).
B. Low Voltage Transformers:
1. Description: Electronic or magnetic low voltage transformer as required for and compatible with the associated luminaires.
2. Primary Voltage: Coordinate with the circuit(s) serving the luminaires.
3. Secondary Voltage: As required for the associated luminaires.
4. Power Rating: As required for the total wattage of the luminaires served plus a minimum of 25 percent.
C. LED Drivers: As required for and compatible with the associated LED module.
2.03 DIMMING BALLASTS AND DRIVERS
A. All Dimming Ballasts and Drivers:
1. Provide appropriate dimming ballasts/drivers in all fluorescent and LED luminaires controlled by wallbox dimmer switches or dimming systems whether or not specifically indicated within the specified luminaire's catalog number.
2. All dimming ballasts/drivers shall be compatible with associated wallbox dimmer switches or centralized dimming system control units.
3. Dimming Range: 100 percent to 5 percent.
4. Voltage: Universal (120 through 277 volts).
5. Power Factor: Greater than 0.95.
6. Total Harmonic Distortion: Less than 10 percent.
7. Sound Level Rating: Class A.
B. LED Dimming Drivers: Advance Xitanium series or equal.
2.04 EMERGENCY POWER SUPPLIES
A. Provide appropriate emergency battery in all fluorescent and LED luminaires indicated as emergency fixtures whether or not specifically indicated within the specified luminaire's catalog number.
1. Battery Type: Sealed nickel calcium (NiCad) with 7-year, minimum, life expectancy.
2. Illumination Time: 90 minutes minimum.
3. Voltage: Universal (120 through 277 volts).
4. Test Switch: Two-wire with LED indicator.
5. Lamp Operation: Two-lamp operation for luminaries equipped with more than one lamp.
6. Minimum Initial Illumination Rating:
a. Linear Fluorescent: 1400 lumens per luminaire.
b. Compact Fluorescent: 1100 lumens per luminaire.
c. Integrated LED 1000 Lumens and Less: 10 watt output.
d. Integrated LED Greater than 1000 Lumens: 20 watt output.
2.05 LAMPS
A. LED: As indicated on the Drawings.
2.06 ACCESSORIES
A. Provide all supplementary items, appurtenances, and devices incidental to or necessary for a sound, secure, and complete installation including, but not limited to:
1. Dimming ballasts for fluorescent and LED luminaires that are served by wallbox dimmer switches or dimming systems.
2. Emergency power supplies for fluorescent and LED luminaires indicated as emergency fixtures.
3. Multiple ballasts for fluorescent luminaires where indicated to have multi-level switching.
4. All trim rings, extensions, stems, canopies, cords, pendant feeds, connectors, bar hangers, fittings, hold-down clips, alignment clips/joiners, etc. necessary to mount the luminaires in a proper and approved method.
5. All necessary low-voltage transformers, connectors, mounting hardware, etc. for a complete low-voltage lighting system.
6. All necessary connectors, feeds, end caps, pendants, mounting hardware, fittings, etc. for a complete track lighting system.
7. Chain hangers for all suspended luminaires in unfinished areas.
8. Drywall frames for all linear fluorescent luminaires that are recessed into drywall ceilings.
9. Wireguards for any wall-mounted luminaires, including emergency lighting unit equipment and exit signs, located in gymnasiums or where otherwise exposed to physical damage.
10. Fire-rated luminaire covers (tents) for luminaires installed in fire-rated ceiling assemblies; coordinate locations of fire-rated ceiling assemblies with the Architectural plans.
11. Any seismic bracing and/or restraints required by the Authority Having Jurisdiction.

PART 3 EXECUTION
3.01 INSTALLATION
A. Install luminaires in locations shown on the Architectural Reflected Ceiling Plan(s); luminaire locations on the Architectural Reflected Ceiling Plan(s) take precedence over locations indicated on the electrical lighting plans.
B. Install luminaires plumb and level and align with building lines and adjacent luminaires.
C. Support all luminaires completely independent of any suspended ceiling systems.
D. Connect luminaires to branch circuit.
1. Circuit all exit signs, emergency lights, and nightlights ahead of any switching.
2. Do not use multiwire branch circuits for circuits serving emergency lighting equipment such as emergency batteries or emergency lighting unit equipment.
E. Provide all additional emergency lighting and/or exit signs determined necessary by the Authority Having Jurisdiction during inspections.
F. Install all remote ballasts, low voltage transformers, and drivers in concealed accessible areas in close proximity to the associated luminaires and connect to the associated luminaires per the manufacturer's recommendations, including adjusting wire sizes for voltage drop if required.
G. Prevent insulation from being installed above or within 3 inches away from any luminaire that is recessed into an insulated ceiling but is not insulated ceiling (IC) rated.
H. Install fire-rated luminaire covers (tents) for luminaires installed in fire-rated ceiling assemblies; provide fire-rated boxes around luminaires when fire-rated luminaire covers (tents) are not available.
I. Burn-in all fluorescent lamps controlled by wallbox dimmers or dimming systems for a minimum of 100 hours prior to connecting to dimmer.
3.02 CLOSEOUT
A. Replace any lamps and ballasts that expire before the Owner's acceptance of the project.
B. Aim and adjust all luminaires to provide illumination levels, focusing, and distribution patterns to the Owner's satisfaction.

**END OF SECTION**

## SECTION 271005 - TELEPHONE AND DATA SYSTEMS

PART 1 GENERAL
1.01 PREPARATION
A. Coordinate all demarcation locations with the serving utility and/or the Landlord.
B. Hold meeting with the Owner prior to commencing work.
1. Determine Scope of Work and Division of Responsibility.
2. Determine quantities of phone drops and data drops are required at each outlet box.
3. Confirm all cabling, termination, cross-connection equipment, enclosure, and jack requirements.

PART 2 PRODUCTS
2.01 ENCLOSURES
A. Backboards: Provide 3/4 inch thick UL-labeled, fire-retardant, interior grade plywood; size as indicated on the Drawings.
B. Equipment Racks: Only if required pursuant to meeting with the Owner:
1. Wall-Mounted Racks: Chatsworth Products Standard Swing Gate series; 19 inches wide, depth as required for installed components, and height as required for installed components plus 50 percent.
2. Floor-Mounted Racks: Chatsworth Products 50120 QuadraRack series with vertical and horizontal cable management, top and bottom cable troughs, and grounding lug; 19 inches wide, 29 inches deep, and height as required for installed components plus 50 percent.
2.02 OUTLET BOXES
A. Wall: 4-square by 2-1/8 inch deep outlet box with single gang mud ring and cover plate unless indicated otherwise or otherwise required.
B. Floor: As indicated on the Drawings or within Section 260537 unless indicated otherwise or otherwise required.
C. Wall Plates:
1. Provide standard-size nylon blank wall plates unless indicated otherwise; color as selected by the Architect. Mid-size or jumbo wall plates are not permitted.
2. When cabling is to be provided by this Contractor, provide standard-size nylon modular keystone jack cover plates compatible with the associated modular keystone jacks and with appropriate number of jacks unless indicated otherwise; color as selected by the Architect.
2.03 PATHWAYS
A. All Pathways:
1. See Section 260534 for permitted conduit types.
2. Provide pullstring in each conduit.
B. Service Entrance: Conduit with extended radius sweeps; size as indicated or otherwise required.
C. Branch Wiring: Provide 3/4 inch minimum conduit from all outlet boxes to accessible ceiling space unless indicated otherwise.
2.04 COPPER CABLES, PLUGS, AND JACKS: Only if required pursuant to meeting with the Owner:
A. Data:
1. All Data Cabling: Unshielded twisted pair (UTP) Category 6A unless indicated otherwise or otherwise required.
2. Backbone (Riser) Cabling: Type CMR when installed in conduit and Type CMP when not installed in conduit; gray jacket unless indicated otherwise or otherwise required.
3. Horizontal Cabling: Type CM when installed in conduit and Type CMP when not installed in conduit; blue jacket unless indicated otherwise or otherwise required.
4. Plugs: Category 6A UTP non-keyed 8-wire modular plugs unless indicated otherwise or otherwise required.
5. Jacks: Category 6A UTP non-keyed 8-wire RJ45 modular keystone jack unless indicated otherwise or otherwise required; color as selected by the Owner.
B. Telephone:
1. All Telephone Cabling: Unshielded twisted pair (UTP) Category 3 unless indicated otherwise or otherwise required.
2. Horizontal Cabling: Type CM when installed in conduit and Type CMP when not installed in conduit; blue jacket unless indicated otherwise or otherwise required.
3. Plugs: Category 3 UTP non-keyed 8-wire modular plugs unless indicated otherwise or otherwise required.
4. Jacks: Category 3 UTP non-keyed 8-wire RJ45 modular keystone jack unless indicated otherwise or otherwise required; color as selected by the Owner.
2.05 CROSS-CONNECTION EQUIPMENT: Only if required pursuant to meeting with the Owner:
A. Connector Blocks for Category 3 Cabling: Type 66 insulation displacement connectors unless indicated otherwise or otherwise required with capacity sufficient for cables to be terminated plus 25 percent spare.
B. Connector Blocks for Category 5e Cabling: Type 110 insulation displacement connectors unless indicated otherwise or otherwise required with capacity sufficient for cables to be terminated plus 25 percent spare.
C. Patch Panels for Copper Cabling: Panduit DP5e series UTP patch panel unless indicated otherwise or otherwise required with quantity of ports sufficient for cables to be terminated plus 25 percent spare.
D. Patch Cords: Provide one Category 5e patch cord for each pair of patch panel ports.

PART 3 EXECUTION
3.01 INSTALLATION OF ENCLOSURES
A. Backboards: Install at locations indicated on the Drawings.
B. If required pursuant to meeting with the Owner:
1. Wall-Mounted Racks: Install to plywood backboard at locations directed by the Owner.
2. Floor-Mounted Racks: Permanently anchor to floor in accordance with manufacturer's recommendations at locations directed by the Owner, connect adjacent racks together, and remove interior side panels.
3.02 INSTALLATION OF OUTLET BOXES
A. Install in compliance with Section 260537.
B. Mounting Heights: See Section 262726.
3.03 INSTALLATION OF PATHWAYS
A. All Pathways:
1. Install all pathways with the following minimum clearances:
a. 48 inches from motors, generators, frequency converters, transformers, x-ray equipment, and uninterruptible power systems.
b. 12 inches from power conduits and cables and panelboards.
c. 5 inches from fluorescent and high frequency lighting fixtures.
d. 6 inches from flues, hot water pipes, and steam pipes.
B. Conduit:
1. Install conduit in compliance with Section 260534 unless indicated otherwise.
a. Do not install more than two 90 degree bends in a single horizontal cable run.
b. Leave pull cords in place where cables are not initially installed.
c. Under floor slabs, locate conduit at 12 inches minimum below vapor retarder and seal penetrations of vapor retarder around conduit.
2. Underground Service Entrance: Install conduit at least 18 inches below finish grade and encase in at least 3 inches thick concrete for at least 60 inches out from the building line.
C. Grounding and Bonding: Perform in accordance with ANSI/J-STD-607 and NFPA 70.
3.04 INSTALLATION OF CABLES, PLUGS, AND JACKS
A. Only if required pursuant to meeting with the Owner:
1. Install cables from outlet to cross-connection equipment as directed by the Owner.
2. Do not exceed 300 feet from outlet to switch.
3. Do not bend cable tighter than the greater of the manufacturer's recommended bend radius or 4 times the cable diameter.
4. Do not exceed the greater of the manufacturer's recommended cable pull tension or 25 pounds.
5. Use only lubricants approved by cable manufacturer when installing cables in conduit and do not chafe or damage outer jacket.
6. Install plugs and jacks as required.
7. Provide the following minimum extra length of cable, looped neatly:
a. At Patch Panels: 10 feet.
b. At Outlets: 12 inches.
8. Install labels complying with TIA/EIA-606 using coded identifiers:
a. Cables: Color coded labels on each end.
b. Outlets: Label each jack on its cover plate with a unique numerical identifier as to its type and function.
c. Patch Panels: Label each jack with a unique numerical identifier as to its type and function.
d. Patch Cords: Label with jack identifier corresponding to initial installation.
3.05 INSTALLATION OF CROSS-CONNECTION EQUIPMENT
A. Only if required pursuant to meeting with the Owner:
1. Install connector blocks at backboards as directed by the Owner.
2. Install patch panels in equipment racks as directed by the Owner.
3. Install labels complying with TIA/EIA-606 using coded identifiers:
a. Patch Panels: Label each jack with a unique numerical identifier as to its type and function.
b. Patch Cords: Label with jack identifier corresponding to initial installation.
3.06 TESTING
A. General: Comply with inspection and testing requirements of specified installation standards.
B. Visual Inspection:
1. Inspect cable jackets for certification markings.
2. Inspect cable terminations for color coded labels of proper type.
3. Inspect outlet plates and patch panels for complete labels.
4. Inspect patch cords for complete labels.
C. Testing of Copper Cabling and Associated Equipment:
1. Test backbone cables after termination but before cross-connection.
2. Test backbone cables for DC loop resistance, shorts, opens, intermittent faults, and polarity between connectors and between conductors and shield, if cable has overall shield.
3. Test operation of shorting bars in connection blocks.
4. Category 3 Backbone: Perform attenuation test.
5. Category 3 Links: Test each pair for short circuit continuity, short to ground, crosses, reversed polarity, operational and ring-back, and dial tone.
6. Category 5e/6 Backbone: Perform near end cross talk (NEXT) and attenuation tests.
7. Category 5e/6 Links: Perform tests for wire map, length, attenuation, NEXT, and propagation delay.
D. Final Testing: After all work is complete, including installation of telecommunications outlets, and telephone dial tone service is active, test each voice jack for dial tone.

**END OF SECTION**

## SECTION 275132 - TELEVISION SYSTEMS

PART 1 GENERAL - NOT USED

PART 2 PRODUCTS
2.01 ENCLOSURES
A. Backboards: Provide 3/4 inch thick UL-labeled, fire-retardant, interior grade plywood; size as indicated on the Drawings.
2.02 OUTLET BOXES
A. Wall: 4-square by 2-1/8 inch deep outlet box with single gang mud ring and cover plate unless indicated otherwise or otherwise required.
B. Floor: As indicated on the Drawings or within Section 260537 unless indicated otherwise or otherwise required.
C. Wall Plates:
1. Provide standard-size nylon blank wall plates unless indicated otherwise; color as selected by the Architect. Mid-size or jumbo wall plates are not permitted.
2.03 PATHWAYS
A. All Pathways:
1. See Section 260534 for permitted conduit types.
2. Provide pullstring in each conduit.
B. Service Entrance: Conduit with extended radius sweeps; size as indicated or otherwise required.
C. Branch Wiring: Provide 3/4 inch minimum conduit from all outlet boxes to accessible ceiling space unless indicated otherwise.

PART 3 EXECUTION
3.01 INSTALLATION OF ENCLOSURES
A. Backboards: Install at locations indicated on the Drawings.
3.02 INSTALLATION OF OUTLET BOXES
A. Install in compliance with Section 260537.
B. Mounting Heights: See Section 262726.
3.03 INSTALLATION OF PATHWAYS
A. All Pathways:
1. Install all pathways with the following minimum clearances:
a. 48 inches from motors, generators, frequency converters, transformers, x-ray equipment, and uninterruptible power systems.
b. 12 inches from power conduits and cables and panelboards.
c. 5 inches from fluorescent and high frequency lighting fixtures.
d. 6 inches from flues, hot water pipes, and steam pipes.
B. Conduit:
1. Install conduit in compliance with Section 260534 unless indicated otherwise.
a. Do not install more than two 90 degree bends in a single horizontal cable run.
b. Leave pull cords in place where cables are not initially installed.
c. Under floor slabs, locate conduit at 12 inches minimum below vapor retarder and seal penetrations of vapor retarder around conduit.

**END OF SECTION**

## SECTION 260800 - COMMISSIONING OF ELECTRICAL SYSTEM

PART 1 GENERAL
1.01 SUMMARY
A. Section includes Cx process requirements for the following electrical systems, assemblies, and equipment:
1. Transformers.
2. Distribution and branch-circuit panelboards.
3. Wiring devices.
4. Lighting control systems.
5. Normal Power System testing and verification.
B. Related requirements:
1. Section 019113 "General Commissioning Requirements" for general Cx process requirement and CxA responsibilities.
1.02 INFORMATIONAL SUBMITTALS
A. Construction Checklists: Draft construction checklists will be created by CxA for Contractor review.
B. Construction Checklists: Installation and Performance test checklists for systems, assemblies, subsystems, equipment, and components to be part of the Cx process and according to requirement in Section 019113 "General Commissioning Requirement."
1. Instrumentation and control for electrical systems.
2. Instrumentation and control for lighting control systems.
3. Electrical feeders and branch circuits.
4. Transformers.
5. Medium voltage power cables.
6. Medium voltage circuit breakers.
7. Medium voltage surge protective devices.
8. Metering devices.
9. Panelboards.
10. Lighting.
11. Lighting Controls.

PART 2 PRODUCTS - NOT USED

PART 3 EXECUTION
3.01 CONSTRUCTION CHECKLISTS
A. Complete detailed construction checklists (prefunctional checklists) prepared by the CxA for HVAC systems, assemblies, subsystems, equipment, and components.
3.02 CONSTRUCTION CHECKLIST REVIEW
A. Review and provide written comments on draft construction checklists. CxA will create required draft construction checklists and provide item to Contractor.
B. Return draft construction checklist review comments within 5 days of receipt.
C. When review comments have been resolved, the CxA will provide final construction checklists marked "Approved for Use, (date)."
D. Use only construction checklists marked "Approved for Use, (date)."
3.03 CX TESTING PREPARATION
A. Certify that electrical systems, subsystems, and equipment have been installed, calibrated, and started and that they are operating according to the Contract Documents and approved submittals.
B. Set systems, subsystems, and equipment into operating mode to be tested according to approved test procedures (for example: normal shutdown, normal auto position, normal manual position, unoccupied cycle, and alarm conditions).
3.04 CX TESTS COMMON TO ELECTRICAL SYSTEMS
A. Verification of Normal and essential Power System Operation:
1. Prerequisites:
a. Acceptance of results for construction checklists for Division 26 electrical components associated with essential power system.
2. Equipment and Systems to Be Tested: Division 26 electrical equipment.
3. Test Purpose: verify operation of Normal power system.
4. Test Conditions:
a. Energize components of Normal power system.
b. Stimulate a failure of Normal power system.
B. Verification of Control and Instrumentation:
1. Prerequisites: Acceptance of results for construction checklists.
C. Test Purpose: Verify operation of control and monitoring systems for Normal and Essential power systems.
D. Test Conditions:
1. Energize components of Normal power system.
2. Test operation of equipment.
3. Test operation of all lighting controls (occupancy sensors, daylight controls, schedules).

**END OF SECTION**

RELEASE FOR CONSTRUCTION
AS NOTED ON PLANS REVIEW
DEVELOPMENT SERVICES
LEE'S SUMMIT, MISSOURI
03/10/2021

Bergmeyer
BOS . 51 Sleeper St. 6th Floor Boston, MA 02210 617.542.1025
LA . 800 South Figueroa St. Suite 1080 Los Angeles, CA 90017 212.337.1090
www.bergmeyer.com

CONSULTANTS:
Schnackel engineers
800-581-0963
www.schnackel.com
SE JOB#: 200383

SEAL/ SIGNATURE:
STATE OF MISSOURI
GREGORY ROY SCHNACKEL
NUMBER
E-026570
REGISTERED PROFESSIONAL ENGINEER
Date: 03/05/21
COA #: E-2009006642

| NO. | BY | DATE | DESCRIPTION |
|---|---|---|---|
| 1 | | 2021-03-09 | ADDENDUM #1 |
| | | 2021-01-11 | PERMIT/BID SET |
| | | 2020-12-21 | 75% SET |
| | | 2020-10-12 | DD SET |

SHAKE SHACK

SHAKE SHACK - LEE'S SUMMIT MO

LEE'S SUMMIT
MISSOURI
SHACK #1348

PERMIT/BID SET

ELECTRICAL SPECIFICATIONS

| | |
|---|---|
| DRAWN BY: | AEH |
| CHECKED BY: | GRS |
| JOB NO: | 20068.00 |

E591

RELEASE FOR CONSTRUCTION
AS NOTED ON PLANS REVIEW
DEVELOPMENT SERVICES
LEE'S SUMMIT, MISSOURI
03/10/2021

## PANEL "P1"

FED FROM: POWER PANEL "DP"
VOLTAGE: 120/208V, 3 PHASE, 4 WIRE
BUS MATERIAL: ALUMINUM OR COPPER
BUS LOAD: 189 AMPS
BUS RATING: 225 AMPS
MAIN: MAIN LUG ONLY
MOUNTING: FLUSH MOUNTED
ENCLOSURE: NEMA 1
FAULT CURRENT: 40127 AMPS
AIC/SCCR RATING: 42 kAIC
OPTIONS*: BONDED AND ISOLATED GROUND BARS

| NOTES | CKT. | LOAD DESCRIPTION | LOAD (VA) A | B | C | BREAKER | BREAKER | LOAD (VA) A | B | C | LOAD DESCRIPTION | CKT. | NOTES |
|---|---|---|---|---|---|---|---|---|---|---|---|---|---|
| GFCI | 1 | EMPLOYEE TABLE RECEPT. | 360 | | | 20/1 | 20/1 | 720 | | | FOOD PROCESSOR | 2 | GFCI |
| | 3 | UTILITY ROOM RECEPT. | | 180 | | 20/1 | 20/1 | | 1728 | | TEA BREWER | 4 | GFCI |
| | 5 | DINING/CORRIDOR GEN REC. | | | 540 | 20/1 | 45/2 | | | 4680 | DISHWASHER | 6 | HPL |
| | 7 | WORK ROOM RECEPT. | 180 | | | 20/1 | --- | 4680 | | | ----- | 8 | |
| GFCI | 9 | BEER SYSTEM | | 1560 | | 20/1 | 20/1 | | 1620 | | FOOD PROCESSOR | 10 | GFCI |
| | 11 | ICE CUBER | | | 1477 | 15/2 | 20/1 | | | 600 | WS-1 | 12 | HPL |
| | 13 | ----- | 1477 | | | --- | 20/1 | 1440 | | | TANKLESS HWH-1 | 14 | HPL |
| GFCI | 15 | BAG-IN-BOX | | 1800 | | 20/1 | 20/1 | | 1800 | | NITROGEN TANK | 16 | GFCI |
| GFCI | 17 | DIPPING CABINET | | | 1800 | 20/1 | 20/1 | | | 1800 | ICE CHEST/SODA TOWER | 18 | GFCI |
| GFCI | 19 | MIXER | 1800 | | | 20/1 | 20/1 | 720 | | | BEVERAGE DISPENSER | 20 | GFCI |
| GFCI | 21 | MIXER | | 624 | | 20/1 | 20/1 | | 780 | | DIPPING CABINET | 22 | GFCI |
| GFCI | 23 | HAND MIXER | | | 660 | 20/1 | 20/1 | | | 500 | DATA RACK 2 | 24 | |
| GFCI | 25 | BEVERAGE DISPENSER | 1200 | | | 20/1 | 20/1 | 500 | | | DATA RACK 1 | 26 | |
| GFCI | 27 | ICE CHEST/SODA TOWER | | 1800 | | 20/1 | 20/1 | | 300 | | OFFICE PRINTER | 28 | |
| GFCI | 29 | KDS MONITOR | | | 600 | 20/1 | 20/1 | | | 1500 | HAND DRYER | 30 | HPL |
| GFCI | 31 | NOTIFICATION BOARD | 500 | | | 20/1 | 20/1 | 180 | | | DISPLAY FREEZER | 32 | GFCI |
| GFCI | 33 | PAGER SYSTEM | | 500 | | 20/1 | 20/1 | | 300 | | SECURITY ALARM | 34 | HLO |
| | 35 | ORDER KIOSK PLUGMOLD | | | 1440 | 20/1 | 20/1 | | | 900 | ORDER COUNTER GEN REC. | 36 | |
| | 37 | MANAGERS DESK IG | 720 | | | 20/1 | 20/1 | 1200 | | | P.O.S. TERMINALS | 38 | GFCI |
| | 39 | FLUSHVALVE | | 400 | | 20/1 | 20/1 | | 300 | | KDS MONITOR | 40 | GFCI |
| | 41 | FAUCET | | | 360 | 20/1 | 20/1 | | | 1500 | HAND DRYER | 42 | HPL |
| HPL | 43 | OIL TANK | 1800 | | | 20/1 | 20/1 | 1260 | | | SHOW WINDOW REC. | 44 | |
| HPL | 45 | OIL TANK | | 1800 | | 20/1 | 20/1 | | 900 | | RECEPT. | 46 | |
| GFCI | 47 | KDS MONITOR | | | 1500 | 20/1 | 15/1 | | | 612 | AC-1 | 48 | |
| TC | 49 | P-1 | 400 | | | 15/1 | 20/2 | 611 | | | ASHP-1 | 50 | |
| TC | 51 | EF-3 | | 448 | | 15/1 | --- | | 611 | | ----- | 52 | |
| HLO | 53 | LIGHTING/EM | | | 1535 | 20/1 | 20/1 | | | 1418 | PATIO/EXTERIOR LIGHTING | 54 | |
| | 55 | LIGHTING | 1169 | | | 20/1 | 20/1 | 1200 | | | SFSG NEON SIGNAGE | 56 | |
| | 57 | EXTERIOR SIGNAGE | | 1200 | | 20/1 | 20/1 | | 1080 | | CONTROLLED RECEPT | 58 | |
| | 59 | FANS | | | 413 | 20/1 | 20/1 | | | 500 | LUTRON VIVE HUB | 60 | |
| | 61 | MOTORIZED DAMPER | 20 | | | 20/1 | 20/1 | 100 | | | REAR DOOR BUZZER | 62 | |
| | 63 | EXTERIOR SIGNAGE | | 1200 | | 20/1 | 20/1 | | 180 | | DRIVE THRU NOTIFICATION | 64 | GFCI |
| | 65 | EXT. DIRECTIONAL SIGN | | | 500 | 20/1 | 20/1 | | | 500 | PREVIEW MENUBOARD | 66 | |
| | 67 | EXT. DIRECTIONAL SIGN | 500 | | | 20/1 | 20/1 | 500 | | | ORDER MENUBOARD | 68 | |
| | 69 | EXTERIOR RECEPT. | | 180 | | 20/1 | 20/1 | | 500 | | ORDER MENUBOARD | 70 | |
| GFCI | 71 | CO2 MONITORING SYSTEM | | | 180 | 20/1 | 20/1 | | | | SPARE | 72 | |
| | 73 | SPARE | | | | 20/1 | 20/1 | | | | SPARE | 74 | |
| | 75 | SPARE | | | | 20/1 | 20/1 | | | | SPARE | 76 | |
| | 77 | SPARE | | | | 20/1 | 20/1 | | | | SPARE | 78 | |
| | 79 | SPACE ONLY | | | | | | | | | SPACE ONLY | 80 | |
| | 81 | SPACE ONLY | | | | | | | | | SPACE ONLY | 82 | |
| | 83 | SPACE ONLY | | | | | | | | | SPACE ONLY | 84 | |

NOTES:
* SEE SPECIFICATIONS FOR OTHER OPTIONS REQUIRED BUT NOT NECESSARILY NOTED HERE
GFCI CIRCUIT BREAKER SHALL BE GROUND-FAULT CIRCUIT INTERRUPTING (GFCI) TYPE
HLO CIRCUIT BREAKER SHALL BE EQUIPPED WITH HANDLE LOCK-ON DEVICE (SQUARE D #HL01 OR EQUAL)
HPL CIRCUIT BREAKER SHALL HAVE PERMANENTLY-INSTALLED HANDLE PADLOCK ATTACHMENT TO LOCK BREAKER IN OPEN POSITION (SQUARE D #QO*PAF OR EQUAL)
TC CIRCUIT SHALL BE ROUTED THROUGH TIMECLOCK FOR AUTOMATIC CONTROL. SEE LIGHTING CONTROL DETAILS.

## PANEL "P2"

FED FROM: POWER PANEL "DP"
VOLTAGE: 120/208V, 3 PHASE, 4 WIRE
BUS MATERIAL: ALUMINUM OR COPPER
BUS LOAD: 339 AMPS
BUS RATING: 400 AMPS
MAIN: MAIN LUG ONLY
MOUNTING: FLUSH MOUNTED
ENCLOSURE: NEMA 1
FAULT CURRENT: 46480 AMPS
AIC/SCCR RATING: 65 kAIC
OPTIONS*: BONDED EQUIPMENT GROUND BAR

| NOTES | CKT. | LOAD DESCRIPTION | LOAD (VA) A | B | C | BREAKER | BREAKER | LOAD (VA) A | B | C | LOAD DESCRIPTION | CKT. | NOTES |
|---|---|---|---|---|---|---|---|---|---|---|---|---|---|
| HPL | 1 | HEAT LAMP | 1310 | | | 15/2 | 20/1 | 180 | | | DISPLAY FREEZER | 2 | GFCI |
| | 3 | ----- | | 1310 | | --- | 15/2 | | 1393 | | TOASTER CONVEYOR | 4 | GFCI |
| HPL | 5 | HEAT LAMP | | | 853 | 15/2 | --- | | | 1393 | ----- | 6 | |
| | 7 | ----- | 853 | | | --- | 20/1 | 2160 | | | SANDWICH/SALAD REF. | 8 | GFCI |
| HPL | 9 | HEAT LAMP | | 1664 | | 20/2 | 20/1 | | 1800 | | WALK-IN CONNECTION | 10 | |
| | 11 | ----- | | | 1664 | --- | 20/3 | | | 1801 | FROZEN CUSTARD | 12 | GFCI |
| NOTE 1 | 13 | GAS GRIDDLE TOP | 480 | | | 20/1 | --- | 1801 | | | ----- | 14 | |
| NOTE 1 | 15 | REFRIGERATED BASE | | 2088 | | 20/1 | --- | | 1801 | | ----- | 16 | |
| NOTE 1 | 17 | GREASE COLLECTOR | | | 840 | 20/1 | 20/3 | | | 1801 | FROZEN CUSTARD | 18 | GFCI |
| NOTE 1 | 19 | FRENCH FRY WARMER | 1092 | | | 20/1 | --- | 1801 | | | ----- | 20 | |
| NOTE 1 | 21 | FRYER BATTERY | | 816 | | 20/1 | --- | | 1801 | | ----- | 22 | |
| NOTE 1 | 23 | REFRIGERATED BASE | | | 1044 | 20/1 | 20/1 | | | 2028 | FOOD TOPPING WARMER | 24 | GFCI |
| | 25 | 1C | 1560 | | | 20/2 | 20/1 | 264 | | | WORKTOP FREEZER | 26 | GFCI |
| | 27 | ----- | | 1560 | | --- | 25/2 | | 1997 | | ECH-1 | 28 | HPL |
| HPL | 29 | ECH-1 | | | 1997 | 25/2 | --- | | | 1997 | ----- | 30 | |
| | 31 | ----- | 1997 | | | --- | 25/2 | 1997 | | | ECH-1 | 32 | HPL |
| HPL | 33 | ECH-1 | | 1997 | | 25/2 | --- | | 1997 | | ----- | 34 | |
| | 35 | ----- | | | 1997 | --- | 25/2 | | | 1997 | ECH-1 | 36 | HPL |
| HPL | 37 | ECH-1 | 1997 | | | 25/2 | --- | 1997 | | | ----- | 38 | |
| | 39 | ----- | | 1997 | | --- | 20/1 | | 360 | | RTU RECEPT. | 40 | |
| GFCI | 41 | RETHERMALIZER | | | 3099 | 30/2 | 20/1 | | | 1800 | 1A | 42 | |
| | 43 | ----- | 3099 | | | --- | 20/3 | 828 | | | 161 | 44 | |
| HPL | 45 | DISHWASHER | | 4680 | | 45/2 | --- | | 828 | | ----- | 46 | |
| | 47 | ----- | | | 4680 | --- | --- | | | 828 | ----- | 48 | |
| | 49 | 161 | 828 | | | 20/3 | 25/2 | 2080 | | | 1D | 50 | |
| | 51 | ----- | | 828 | | --- | --- | | 2080 | | ----- | 52 | |
| | 53 | ----- | | | 828 | --- | 20/1 | | | | SPARE | 54 | |
| GFCI | 55 | FOOD SHELF WARMER | 1140 | | | 20/1 | 20/1 | 1500 | | | HOOD CONTROLS | 56 | |
| GFCI | 57 | FOOD SHELF WARMER | | 948 | | 20/1 | 35/1 | | 1656 | | EF-1 | 58 | |
| GFPE | 59 | FREEZER HEAT TAPE | | | 1000 | 20/1 | 40/2 | | | 3120 | AC-2 | 60 | |
| | 61 | EF-2 | 1656 | | | 35/1 | --- | 3120 | | | ----- | 62 | |
| HPL | 63 | ECH-1 | | 1997 | | 25/2 | 25/2 | | 1997 | | ECH-1 | 64 | HPL |
| | 65 | ----- | | | 1997 | --- | --- | | | 1997 | ----- | 66 | |
| HPL | 67 | ECH-1 | 1997 | | | 25/2 | 25/2 | 1997 | | | ECH-1 | 68 | HPL |
| | 69 | ----- | | 1997 | | --- | --- | | 1997 | | ----- | 70 | |
| HPL | 71 | ECH-1 | | | 1997 | 25/2 | 25/2 | | | 1997 | ECH-1 | 72 | HPL |
| | 73 | ----- | 1997 | | | --- | --- | 1997 | | | ----- | 74 | |
| HPL | 75 | ECH-1 | | 1997 | | 25/2 | 25/2 | | 1800 | | EUH-1 | 76 | |
| | 77 | ----- | | | 1997 | --- | --- | | | 1800 | ----- | 78 | |
| | 79 | WALK-IN CONNECTION | 1800 | | | 20/1 | 20/1 | | | | SPARE | 80 | |
| ST | 81 | SHUNT TRIP CONTACTOR | | | | 20/1 | 20/1 | | | | SPARE | 82 | |
| | 83 | SHUNT TRIP COIL | | | | | 20/1 | | | | SPARE | 84 | |

NOTES:
* SEE SPECIFICATIONS FOR OTHER OPTIONS REQUIRED BUT NOT NECESSARILY NOTED HERE
GFCI CIRCUIT BREAKER SHALL BE GROUND-FAULT CIRCUIT INTERRUPTING (GFCI) TYPE
GFPE CIRCUIT BREAKER SHALL BE GROUND-FAULT PROTECTION OF EQUIPMENT (GFPE) TYPE
ST CIRCUIT BREAKER SHALL BE EQUIPPED WITH SHUNT TRIP COIL
HPL CIRCUIT BREAKER SHALL HAVE PERMANENTLY-INSTALLED HANDLE PADLOCK ATTACHMENT TO LOCK BREAKER IN OPEN POSITION (SQUARE D #QO*PAF OR EQUAL)
NOTE 1 CIRCUIT SHALL BE ROUTED THROUGH CONTACTOR C-ST. CIRCUIT BREAKER SHALL BE GROUND FAULT CIRCUIT INTERRUPTING (GFCI) TYPE.

## POWER PANEL "DP"

FED FROM: UTILITY TRANSFORMER
VOLTAGE: 120/208V, 3 PHASE, 4 WIRE
BUS MATERIAL: ALUMINUM OR COPPER
BUS LOAD: 729 AMPS
BUS RATING: 800 AMPS
MAIN: MAIN LUG ONLY
MOUNTING: FLUSH MOUNTED
ENCLOSURE: NEMA 1
FAULT CURRENT: 54145 AMPS
AIC/SCCR RATING: 65 kAIC
OPTIONS*: BONDED EQUIPMENT GROUND BAR

| NOTES | CKT. | LOAD DESCRIPTION | LOAD (VA) A | B | C | BREAKER | BREAKER | LOAD (VA) A | B | C | LOAD DESCRIPTION | CKT. | NOTES |
|---|---|---|---|---|---|---|---|---|---|---|---|---|---|
| | 1 | RTU-1 | 7905 | | | 90/3 | 80/3 | 7059 | | | RTU-2 | 2 | |
| | | ----- | | 7905 | | --- | --- | | 7059 | | ----- | | |
| | | ----- | | | 7905 | --- | --- | | | 7059 | ----- | | |
| | 3 | SPACE ONLY | | | | | 25/3 | 1273 | | | MUA-1 | 4 | |
| | | ----- | | | | | --- | | 1273 | | ----- | | |
| | | ----- | | | | | --- | | | 1273 | ----- | | |
| | 5 | 1B | 2402 | | | 25/3 | 50/3 | 4491 | | | CU-1 | 6 | |
| | | ----- | | 2402 | | --- | --- | | 4491 | | ----- | | |
| | | ----- | | | 2402 | --- | --- | | | 4491 | ----- | | |
| | 7 | SUBFEED PANEL 'P1' | 20839 | | | 200/3 | 400/3 | 39085 | | | SUBFEED PANEL 'P2' | 8 | |
| | | ------ | | 18864 | | --- | --- | | 40618 | | ------ | | |
| | | ------ | | | 22422 | --- | --- | | | 40488 | ------ | | |
| | 9 | SPACE ONLY | | | | | | | | | SPACE ONLY | 10 | |
| | | ------ | | | | | | | | | ------ | | |
| | | ----- | | | | | | | | | ----- | | |
| | 11 | SPACE ONLY | | | | | | | | | SPACE ONLY | 12 | |
| | | ------ | | | | | | | | | ------ | | |
| | | ----- | | | | | | | | | ----- | | |
| | 13 | SPACE ONLY | | | | | | | | | SPACE ONLY | 14 | |
| | | ------ | | | | | | | | | ------ | | |
| | | ----- | | | | | | | | | ----- | | |

NOTES:
* SEE SPECIFICATIONS FOR OTHER OPTIONS REQUIRED BUT NOT NECESSARILY NOTED HERE

## LOAD ANALYSIS FOR POWER PANEL "DP" (INCLUDING SUBFEEDS)

| LOAD DESCRIPTION | DEMAND FACTOR | PHASE A (VA) CONNECT. | PHASE A DEMAND | PHASE B (VA) CONNECT. | PHASE B DEMAND | PHASE C (VA) CONNECT. | PHASE C DEMAND | TOTAL (VA) CONNECT. | TOTAL DEMAND |
|---|---|---|---|---|---|---|---|---|---|
| LIGHTING: | 125% | 1169 | 1462 | 0 | 0 | 2953 | 3692 | 4122 | 5153 |
| RECEPTACLE: | 100% | 2300 | 2300 | 3680 | 3680 | 1440 | 1440 | 7420 | 7420 |
| OTHER CONTINUOUS: | 125% | 4000 | 5000 | 4700 | 5875 | 2513 | 3142 | 11213 | 14017 |
| OTHER NONCONTINUOUS: | 100% | 5820 | 5820 | 3893 | 3893 | 6693 | 6693 | 16406 | 16406 |
| WATER HEATING: | 100% | 1440 | 1440 | 0 | 0 | 0 | 0 | 1440 | 1440 |
| KITCHEN: | 65% | 24957 | 16223 | 27120 | 17628 | 31327 | 20363 | 83404 | 54213 |
| HEATING ONLY: | 100% | 15976 | 15976 | 19773 | 19773 | 19773 | 19773 | 55521 | 55521 |
| MOTOR: | 100% | 34214 | 34214 | 31142 | 31142 | 30319 | 30319 | 95673 | 95673 |
| ADD 25% OF LARGEST MOTOR: | 100% | 1977 | 1977 | 1977 | 1977 | 1977 | 1977 | 5929 | 5929 |
| TOTAL: | | 91852 | 84409 | 92284 | 83967 | 96994 | 87396 | 281128 | 255771 |
| EQUIVALENT AMPS: | | 766 | 704 | 770 | 700 | 809 | 729 | 781 | 710 |
| PHASE BALANCE: | | | -0.99% | | -1.51% | | 2.51% | | |

## LOAD ANALYSIS FOR PANEL "P1" (INCLUDING SUBFEEDS)

| LOAD DESCRIPTION | DEMAND FACTOR | PHASE A (VA) CONNECT. | PHASE A DEMAND | PHASE B (VA) CONNECT. | PHASE B DEMAND | PHASE C (VA) CONNECT. | PHASE C DEMAND | TOTAL (VA) CONNECT. | TOTAL DEMAND |
|---|---|---|---|---|---|---|---|---|---|
| LIGHTING: | 125% | 1169 | 1462 | 0 | 0 | 2953 | 3692 | 4122 | 5153 |
| RECEPTACLE: | 100% | 2300 | 2300 | 3320 | 3320 | 1620 | 1620 | 7240 | 7240 |
| OTHER CONTINUOUS: | 125% | 4000 | 5000 | 4700 | 5875 | 2513 | 3142 | 11213 | 14017 |
| OTHER NONCONTINUOUS: | 100% | 2520 | 2520 | 700 | 700 | 5300 | 5300 | 8520 | 8520 |
| WATER HEATING: | 100% | 1440 | 1440 | 0 | 0 | 0 | 0 | 1440 | 1440 |
| KITCHEN: | 65% | 10777 | 7006 | 12012 | 7808 | 12517 | 8137 | 35306 | 22949 |
| MOTOR: | 100% | 1031 | 1031 | 1059 | 1059 | 612 | 612 | 2702 | 2702 |
| ADD 25% OF LARGEST MOTOR: | 100% | 102 | 102 | 102 | 102 | 102 | 102 | 306 | 306 |
| TOTAL: | | 23339 | 20860 | 21893 | 18864 | 25617 | 22603 | 70849 | 62326 |
| EQUIVALENT AMPS: | | 195 | 174 | 183 | 158 | 214 | 189 | 197 | 173 |
| PHASE BALANCE: | | | 0.40% | | -9.20% | | 8.80% | | |

## LOAD ANALYSIS FOR PANEL "P2" (INCLUDING SUBFEEDS)

| LOAD DESCRIPTION | DEMAND FACTOR | PHASE A (VA) CONNECT. | PHASE A DEMAND | PHASE B (VA) CONNECT. | PHASE B DEMAND | PHASE C (VA) CONNECT. | PHASE C DEMAND | TOTAL (VA) CONNECT. | TOTAL DEMAND |
|---|---|---|---|---|---|---|---|---|---|
| RECEPTACLE: | 100% | 0 | 0 | 360 | 360 | 0 | 0 | 360 | 360 |
| OTHER NONCONTINUOUS: | 100% | 3300 | 3300 | 3193 | 3193 | 1393 | 1393 | 7886 | 7886 |
| KITCHEN: | 65% | 14180 | 9217 | 15108 | 9821 | 18810 | 12227 | 48098 | 31264 |
| HEATING ONLY: | 100% | 15976 | 15976 | 19773 | 19773 | 19773 | 19773 | 55521 | 55521 |
| MOTOR: | 100% | 10072 | 10072 | 6952 | 6952 | 6576 | 6576 | 23600 | 23600 |
| ADD 25% OF LARGEST MOTOR: | 100% | 520 | 520 | 520 | 520 | 520 | 520 | 1560 | 1560 |
| TOTAL: | | 44048 | 39085 | 45906 | 40618 | 47072 | 40488 | 137025 | 120191 |
| EQUIVALENT AMPS: | | 368 | 326 | 383 | 339 | 393 | 338 | 381 | 334 |
| PHASE BALANCE: | | | -2.44% | | 1.38% | | 1.06% | | |

## ELECTRIC HEATER SCHEDULE

| MARK | BTU PER HOUR | WATTS | VOLTAGE | PHASE | AMPS | MANUFACTURER | CATALOG NUMBER HEATER | FRAME | THERMOSTAT | DISCONNECT | REMARKS |
|---|---|---|---|---|---|---|---|---|---|---|---|
| ECH-1 | 13,652 BTU/HR | 4,000 W | 208V | 1 PHASE | 19.2A | INFRATECH | SL4028 | N/A | N/A | N/A | 1 |
| EUH-1 | 12,287 BTU/HR | 3,600 W | 208V | 1 PHASE | 17.3A | QMARK | EFF4804 | N/A | INTEGRAL | INTEGRAL | 1 |

REMARKS:
1. COORDINATE FINAL FINISH AND COLOR WITH ARCHITECT.

## FOODSERVICE ELECTRICAL SCHEDULE

| ITEM NO. | QTY | DESCRIPTION | ELECTRICAL VOLTS | CYCLE | PHASE | KW | HP | AMPS | ROUGH-IN / CONNECTION TYPE | NEMA | ROUTING | HGT AFF | REMARKS |
|---|---|---|---|---|---|---|---|---|---|---|---|---|---|
| 1 | 1 | WALKIN COOLER/FREEZER COMBO | 120 | 0 Hz | 1 | 1.92 | | 16.00 A | JBOX | | DFA | | E.C. TO MOUNT AND INTERWIRE FROM SWITCH TO FLOURSCENT LIGHT FIXTURES. |
| 1A | 1 | COOLER EVAPORATOR | 120/208 | 0 Hz | 1 | 0.21 | | 1.00 A | | | | | INFORMATION SHOWN IS FOR COORDINATION AND IS TO BE VERIFIED WITH THE SHOP DRAWINGS. |
| 1B | 1 | AIR-COOLED COOLER CONDENSING UNIT | 120/208 | 60 Hz | 3 | 1.72 | 2 | 8.25 A | | - | | | INFORMATION SHOWN IS FOR COORDINATION AND IS TO BE VERIFIED WITH THE SHOP DRAWINGS. |
| 1C | 1 | FREEZER EVAPORATOR | 120/208 | 0 Hz | 1 | 0.21 | | 1.00 A | | | | | INFORMATION SHOWN IS FOR COORDINATION AND IS TO BE VERIFIED WITH THE SHOP DRAWINGS. |
| 1D | 1 | AIR-COOLED COOLER CONDENSING UNIT | 120/208 | 60 Hz | 1 | 1.72 | 2 | 8.25 A | | - | | | INFORMATION SHOWN IS FOR COORDINATION AND IS TO BE VERIFIED WITH THE SHOP DRAWINGS. |
| 36 | 1 | ICE CUBER | 120/208 | 60 Hz | 1 | 2.95 | | 14.20 A | | | | | TO TOP OF JUNCTION BOX. |
| 63 | 1 | DISHWASHER - UNDERCOUNTER | 208 | 60 Hz | 1 | 9.00 | 1 | 45.00 A | | DIRECT | | | E.C. SHALL VERIFY DISHMACHINE PHASE WITH G.C. PRIOR TO ROUGH-IN, AS REQUIRED; REQUIRES3 WIRES AND GROUND CONNECTION. OUTLET TO BE 16" ADD TO TOP OF OUTLET. |
| 75 | 1 | MIXER, HAND | 120 | 60 Hz | 1 | 0.66 | 1 | | | 5-15P | | 48" | OUTLET TO BE 48" AFF TO TOP OF OUTLET. |
| 77 | 1 | RETHERMALIZER, WATER TANK, ELECTRIC | 208 | 60 Hz | 1 | 0.60 | | 29.80 A | | L6□30P | | 48" | OUTLET TO BE 48" AFF TO TOP OF OUTLET. |
| 78 | 1 | FOOD PROCESSOR | 120 | 60 Hz | 1 | 0.72 | 3/4 | 6.00 A | | 5-15P | | 48" | OUTLET TO BE 48" AFF TO TOP OF OUTLET. |
| 90 | 1 | EXHAUST HOOD | 120 | 0 Hz | | | | | JBOX | | | | STUB FROM CEILING, TO BE VERIFIED WITH OWNER PRIOR TO ROUGH-IN. |
| 91 | 1 | EXHAUST FAN | 120 | 0 Hz | 1 | 0.86 | 1 | 7.20 A | JBOX | DCO | VERIFY | | STUB FROM ROOF, TO BE VERIFIED WITH OWNER PRIOR TO ROUGH-IN. |
| 92 | 1 | SUPPLY FAN | 120 | 0 Hz | 1 | 0.86 | 1 | 7.20 A | JBOX | DCO | VERIFY | | STUB FROM ROOF, TO BE VERIFIED WITH OWNER PRIOR TO ROUGH-IN. |
| 93 | 1 | GREASE COLLECTOR | 120 | 0 Hz | 1 | 2.40 | | 20.00 A | | 5-20P | | 16" | OUTLET TO BE 16" AFF TO TOP OF OUTLET. |
| 94 | 1 | ANSUL | 120 | 0 Hz | 1 | 0.96 | | 8.00 A | | | | 88" | STUB FROM CEILING, TO BE VERIFIED WITH OWNER PRIOR TO ROUGH-IN, E.C. TO INTERWIRE TO BUILDING ALARM SYSTEM AND FOR EQUIPMENT SHUTDOWN. |
| 100 | 2 | GAS, COUNTER MODEL GRIDDLES | | 60 Hz | 1 | 0.05 | | 2.00 A | | | | | OUTLET TO BE 16" AFF TO TOP OF OUTLET. |
| 100A | 1 | SAFETY SYSTEM MOVEABLE GAS CONNECTOR | | 0 Hz | | | | | | | | | |
| 101A | 1 | SAFETY SYSTEM MOVEABLE GAS CONNECTOR | | 0 Hz | | | | | | | | | |
| 102A | 2 | EQUIPMENT STAND, REFRIGERATED BASE | | 60 Hz | 1 | 1.00 | 1/4 | 8.70 A | | 5-15P | | | OUTLET TO BE 16" AFF TO TOP OF OUTLET. |
| 102E | 1 | 48" REFRIGERATED BASE | | 60 Hz | 1 | 1.00 | 1/4 | 8.70 A | | 5-15P | | | OUTLET TO BE 16" AFF TO TOP OF OUTLET. |
| 103 | 1 | FRYER BATTERY, GAS | | 60 Hz | 1 | | | 1.40 A | C&P | | | | OUTLET TO BE 16" AFF TO TOP OF OUTLET. |
| 103A | 1 | SAFETY SYSTEM MOVEABLE GAS CONNECTOR | | 0 Hz | | | | | | | | | |
| 103B | 1 | FILTER DRAWER | 115 | 60 Hz | 1 | 0.84 | 1/3 | 7.00 A | C&P | 5-15P | | 16" | |
| 104 | 1 | FRYER BATTERY OF 2 | | 60 Hz | 1 | | | 1.40 A | C&P | | | | OUTLET TO BE 16" AFF TO TOP OF OUTLET. |
| 104A | 1 | SAFETY SYSTEM MOVEABLE GAS CONNECTOR | | 0 Hz | | | | | | | | | |
| 104B | 1 | FILTER DRAWER | 115 | 60 Hz | 1 | 0.84 | 1/3 | 7.00 A | C&P | 5-15P | | 16" | |
| 105 | 1 | FRY HOLDING STATIONS | 120 | 60 Hz | 1 | 1.09 | | 9.10 A | C&P | 5-15P | | 16" | OUTLET TO BE 16" AFF TO TOP OF OUTLET. |
| 121 | 1 | TOASTER, CONVEYOR | 208 | 60 Hz | 1 | 2.78 | | 13.40 A | C&P | 6-20P | | 42" | ELECTRICAL OUTLET AT 42" AFF TO THE BOTTOM OF OUTLET, E.C. TO MOUNT OUTLET HORIZONTAL. |
| 122 | 1 | PREP REFRIGERATOR | | 60 Hz | 1 | | 1/3 | 9.00 A | | 5-15P | | | OUTLET TO BE 16" AFF TO TOP OF OUTLET. |
| 122A | 1 | PREP REFRIGERATOR | | 60 Hz | 1 | | 1/3 | 9.00 A | | 5-15P | | 16" | OUTLET TO BE 16" AFF TO TOP OF OUTLET. |
| 123 | 1 | WORKTOP FREEZER | 115 | 60 Hz | 1 | 0.24 | 1/4 | 2.20 A | C&P | 5-15P | | 16" | |
| 124 | 1 | FOOD TOPPING WARMER | 120 | 60 Hz | 1 | 1.00 | | 8.30 A | C&P | 5-15P | | | ELECTRICAL OUTLET AT 42" AFF TO THE BOTTOM OF OUTLET, E.C. TO MOUNT OUTLET HORIZONTAL. |
| 125 | 2 | KDS SCREEN | 120 | | 1 | 1.80 | | 15.00 A | JBOX | 5-15P | | | STUB OUT OF WALL WITH ITEM #130, WIRE IN TOP CHASE. E.C. TO PROVIDE ISOLATED GROUND. |
| 130 | 1 | OVERSHELF | | 0 Hz | 1 | | | 20.00 A | JBOX | | | 76" | TO STUB OUT OF WALL WITH CIRCUITS FOR ITEM #S 125, 131, 134, 135, 141, (6) 120V/1PH/20AMP CIRCUITS AND (6) DATA OUTLETS. |
| 131 | 1 | HEATED SHELF FOOD WARMER | 120 | 60 Hz | 1 | 0.95 | | 8.00 A | | | | | STUB OUT OF WALL WITH ITEM# 130, WIRE IN TOP CHASE |
| 131A | 1 | HEATED SHEKF FOOD WARMER | 120 | 60 Hz | 1 | 0.77 | | 6.00 A | | | | | STUB OUT OF WALL WITH ITEM# 130, WIRE IN TOP CHASE |
| 133 | 1 | HEAT LAMP | 120/208 | 60 Hz | 1 | 3.10 | - | 16.00 A | JBOX | - | | | STUB OUT OF WALL WITH ITEM# 130, WIRE IN TOP CHASE |
| 133A | 1 | HEAT LAMP | 120/208 | 60 Hz | 1 | 2.44 | - | 12.60 A | JBOX | | | | STUB OUT OF WALL WITH ITEM# 130, WIRE IN TOP CHASE |
| 134 | 1 | HEAT LAMP | 120/208 | 60 Hz | 1 | 1.62 | - | 8.20 A | JBOX | - | | | STUB OUT OF WALL WITH ITEM# 130, WIRE IN TOP CHASE |
| 135 | 1 | BUILT IN HEATED SHELF | 120 | 60 Hz | 1 | 0.42 | | 4.00 A | | | | | STUB OUT OF WALL WITH ITEM# 130, WIRE IN TOP CHASE |
| 141 | 1 | KDS SCREEN | 120 | | 1 | 1.80 | | 15.00 A | JBOX | 5-15P | | | STUB OUT OF WALL WITH ITEM# 130, WIRE IN TOP CHASE |
| 143 | 2 | CURVED LID DISPLAY FREEZER | 115 | 60 Hz | 1 | 1.60 | 1/3 | 1.00 A | | 5-15P | | 16" | |
| 145 | 2 | FOOD TOPPING WARMER | 120 | 60 Hz | 1 | 0.52 | | 4.30 A | C&P | 5-15P | | | ELECTRICAL OUTLET AT 42" AFF TO THE BOTTOM OF OUTLET, E.C. TO MOUNT OUTLET HORIZONTAL. |
| 160 | 1 | FROZEN CUSTARD MACHINE | 208/230 | 60 Hz | 3 | 3.12 | 3 | 15.00 A | | L6-30P | | 16" | (2) CIRCUITS WITH OVER CURRENT PROTECTION DEVICE OUTLET TO BE 16" AFF TO TOP OF OUTLET, E.C. TO PROVIDE CORD & PLUG PER LOCAL CODES, ALL TO BE VERIFIED WITH MANUFACTURERS SHOP DRAWINGS. |
| 161 | 2 | REMOTE CONDENSING UNIT | 120/208 | 60 Hz | 3 | 1.72 | 2 | 8.25 A | | - | | | |
| 162 | 1 | FROZEN CUSTARD DIPPING CABINET | 115 | 0 Hz | 1 | 1.80 | | 15.00 A | C&P | 5-15 | | 16" | OUTLET TO BE 16" AFF TO TOP OF OUTLET. |
| 172 | 1 | DIPPING CABINET | 115 | 0 Hz | 1 | 0.79 | 1/3 | 6.50 A | | | | 16" | OUTLET TO BE 16" AFF TO TOP OF OUTLET. |
| 174 | 2 | KDS SCREEN | 120 | | 1 | 1.80 | | 15.00 A | JBOX | 5-15P | | | STUB OUT OF WALL WITH ITEM# 130, WIRE IN TOP CHASE |
| 181 | 1 | COLD BEVERAGE DISPENSERS | 120 | 60 Hz | 1 | 0.45 | | 4.00 A | C&P | 5-15P | | 42" | ELECTRICAL OUTLET 42" AFF TO BOTTOM OF OUTLET, E.C. TO MOUNT OUTLET HORIZONTAL. |
| 182 | 2 | MIXER, DRINK / BAR | 120 | 60 Hz | | 0.90 | 1/3 | 7.50 A | C&P | 5-15P | | 42" | ELECTRICAL OUTLET AT 42" AFF TO THE BOTTOM OF OUTLET, E.C. TO MOUNT OUTLET HORIZONTAL. |
| 184 | 1 | MIXER, DRINK/BAR | 120 | 60 Hz | 1 | 0.62 | 3/4 | 5.20 A | C&P | 5-15P | | 42" | ELECTRICAL OUTLET AT 42" AFF TO THE BOTTOM OF OUTLET, E.C. TO MOUNT OUTLET HORIZONTAL. |
| 188 | 1 | DISHWASHER - UNDERCOUNTER | 208 | 60 Hz | 1 | 9.00 | 1 | 45.00 A | | DIRECT | | 16" | E.C. SHALL VERIFY DISHMACHINE PHASE WITH G.C. PRIOR TO ROUGH-IN, AS REQUIRED; REQUIRES3 WIRES AND GROUND CONNECTION. OUTLET TO BE 16" ADD TO TOP OF OUTLET. |
| 203 | 2 | ICE CHEST AND SODA TOWER | 115 | 60 Hz | 1 | | | | | | | 48" | E.C. TO VERIFY ALL UTILITY REQUIREMENTS WITH THE SODA VENDOR |
| 204 | 1 | TEA BREWER | 120 | 0 Hz | | 1.73 | - | 14.40 A | | 5-15P | | 42" | ELECTRICAL OUTLET AT 42" AFF TO THE BOTTOM OF OUTLET, E.C. TO MOUNT OUTLET HORIZONTAL. |
| 206 | 2 | BEVERAGE DISPENSER | 120 | 0 Hz | 1 | 0.65 | | 5.60 A | | 5-15P | | 60" | ELECTRICAL OUTLET AT 42" AFF TO THE BOTTOM OF OUTLET, E.C. TO MOUNT OUTLET HORIZONTAL. |
| 208 | 1 | KDS SCREEN | 120 | | 1 | 1.80 | | 15.00 A | JBOX | 5-15P | | | STUB OUT OF WALL WITH ITEM# 130, WIRE IN TOP CHASE |
| 221 | 4 | POS TERMINALS | | | | | | | | | | | |
| 224 | 1 | DRAFT BEER SYSTEM POWER PACK | 120 | 60 Hz | 1 | 1.44 | 1/3 | 12.00 A | C&P | 5-20P | | 114" | E.C. TO VERIFY FINAL LOCATION WITH THE G.C. |

*KEYED NOTES:*
1. *PROVIDE INTERNALLY MOUNTED SURGE SUPPRESSION DEVICE FOR PANELBOARD. REFER TO SPECIFICATION SECTION 264313 ON SHEET E591 FOR REQUIREMENTS.*

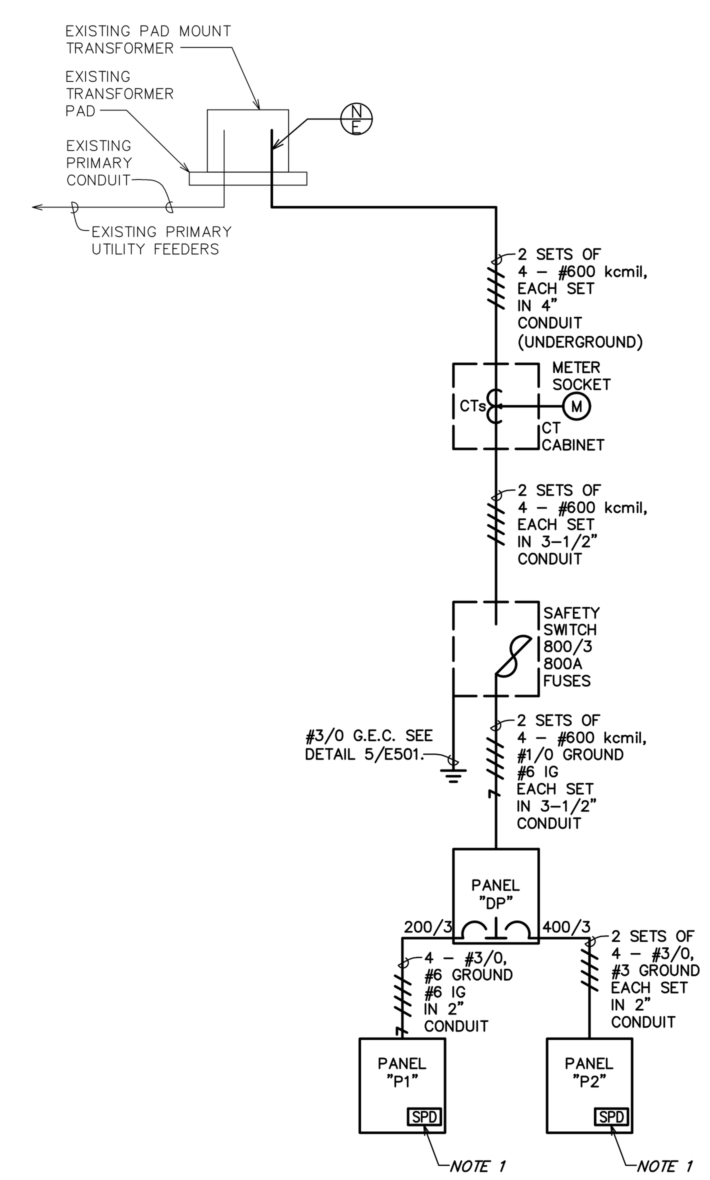


1 ONE-LINE DIAGRAM
NOT TO SCALE

*LEGEND*
*EXISTING*
*NEW WORK*
*NEW TO EXISTING CONNECTION*

Bergmeyer
BOS - 51 Sleeper St. 6th Floor Boston, MA 02210 617.542.1025
LA - 800 South Figueroa St. Suite 1080 Los Angeles, CA 90017 212.337.1090
www.bergmeyer.com

CONSULTANTS:
Schnackel engineers
800-581-0963
www.schnackel.com
SE JOB#: 200383

SEAL/ SIGNATURE:
STATE OF MISSOURI
GREGORY ROY SCHNACKEL
NUMBER E-026570
REGISTERED PROFESSIONAL ENGINEER
*Date: 03/05/21*
*COA #: E-2009006642*

| NO. | BY | DATE | DESCRIPTION |
|---|---|---|---|
| 1 | | 2021-03-09 | ADDENDUM #1 |
| | | 2021-01-11 | PERMIT/BID SET |
| | | 2020-12-21 | 75% SET |
| | | 2020-10-12 | DD SET |

SHAKE SHACK

SHAKE SHACK - LEE'S SUMMIT MO

LEE'S SUMMIT
MISSOURI
SHACK #1348

PERMIT/BID SET

ELECTRICAL SCHEDULES AND ONE-LINE

DRAWN BY: AEH
CHECKED BY: GRS
JOB NO: 20068.00

E601

RELEASE FOR CONSTRUCTION
AS NOTED ON PLANS REVIEW
DEVELOPMENT SERVICES
LEE'S SUMMIT, MISSOURI
03/10/2021

## LUMINAIRE SCHEDULE

| MARK | MANUFACTURER | CATALOG NUMBER | VOLTAGE | WATTS | MOUNTING | LAMP QUANTITY | LAMP DESCRIPTION | LAMP TYPE | SELECTED BY OTHERS? | REMARKS |
|---|---|---|---|---|---|---|---|---|---|---|
| A1 | TOPAZ | F-L24-50-840-D-HE2 | 120 | 50 | CEILING, RECESSED | – | INTEGRAL LED | LED | YES | |
| A1-EM | TOPAZ | F-L24-50-840-D-HE2 | 120 | 50 | CEILING, RECESSED | – | INTEGRAL LED | LED | YES | PROVIDE WITH NICOR EMB80 EM DRIVER |
| A2 | TOPAZ | F-L22-30-835K-D-HE2 | 120 | 30 | CEILING, RECESSED | – | INTEGRAL LED | LED | YES | |
| A2-EM | TOPAZ | F-L22-32-40K-D-HP-75 | 120 | 30 | CEILING, RECESSED | – | INTEGRAL LED | LED | YES | PROVIDE WITH NICOR EMB80 EM DRIVER |
| B1 | BEST LIGHTING | LEDUC-E24-3K<br>CORDPLUG-WHT-6C3P | 120 | 10 | UNDERCABINET | – | INTEGRAL LED | LED | YES | |
| C | CONTECH LIGHTING | HEAD: CTL603-P<br>TRACK: LT-LENGTH-P | 120 | 12 | TRACK | 1 | TCP #LED12P30D27KNFL | LED | YES | PROVIDE LA-23-RN-P CURRENT LIMITING DEVICE PER PLANS. 1A=REG1, 2A=REG21, 3A=REG4, 4A=REG5 LENGTH = SEE PLAN FOR REQUIRED LENGTHS |
| ELF | AXIS LIGHTING | WBRLED-900-80-27-S-4-W-UNV-DP-1-D | 120 | 40 | CEILING, RECESSED | – | INTEGRAL LED | LED | YES | |
| P5 | TUDO AND CO | GLASS BUBBLE LAMP SHADE PENDANT | 120 | 9 | CEILING, SUSPENDED | 1 | LED E27 BASE<br>LEDLIGHT #65844 OR SIMILAR | LED | YES | VERIFY FINAL MOUNTING HEIGHT WITH ARCHITECT |
| R1 | JUNO | IC22LED-G4-14LM-27K-90CRI-120-FRPC 24 WWH | 120 | 20 | CEILING, RECESSED | – | INTEGRAL LED | LED | YES | |
| R2 | JUNO | IC4AL-07LM-27K-90CRI-FL-120-FRPC 42 PTSC | 120 | 11 | CEILING, RECESSED | – | INTEGRAL LED | LED | YES | |
| R4 | JUNO | MG1LG2-27K-NFL-SN | 12 | 5 | CEILING, RECESSED | – | INTEGRAL LED | LED | YES | |
| XL | DIODE LED | DI-12V-0160 BLAZE | 12 | 3W/FT | CEILING, SURFACE | – | INTEGRAL LED | LED | YES | |
| L | DIODE LED | DI-12V-FV30-80SP | 12 | 1.5W/FT | CEILING, SURFACE | – | INTEGRAL LED | LED | YES | |
| G1 | LITHONIA | ZLD-L48-3000LM-FST-MVOLT-4000K-80CRI-WH | 120 | 30 | CEILING, SURFACE | – | INTEGRAL LED | LED | YES | |
| E1W | BEST LIGHTING | R-16-LED | 120 | 5 | CEILING, SURFACE | 2 | 3W LED LAMPS | LED | YES | |
| E3W | BEST LIGHTING | R-16HO-LED | 120 | 15 | CEILING, SURFACE | 2 | 3W LED LAMPS | LED | YES | |
| E4 | BEST LIGHTING | RHLED-2-WP-MV-B | 6 | 2 | CEILING, SURFACE | 2 | 3W LED LAMPS | LED | YES | |
| EX1 | BEST LIGHTING | ELXTEU-1-G-C-A-EM | 120 | 4 | CEILING, SUSPENDED | – | INTEGRAL LED | LED | YES | |
| EX2 | BEST LIGHTING | EZXTEU-2-R-W-W-EM-SDT | 120 | 4 | WALL, SURFACE | – | INTEGRAL LED | LED | YES | |
| XC4 | MINKA AIRE | F753-KA | 120 | 47 | CEILING, SURFACE | – | NO LAMPING | – | YES | |
| X3WA-EM | LUMARK | XTOR9A-N-CBP | 120 | 79 | WALL, RECESSED | – | INTEGRAL LED | LED | YES | |

LAMP TYPE CODES: FL=LINEAR FLUORESCENT, CFL=COMPACT FLUORESCENT, IND=INCANDESCENT, MH=METAL HALIDE, HPS=HIGH PRESSURE SODIUM, LED=LIGHT EMITTING DIODE

LUMINAIRE SCHEDULE GENERAL NOTES:

A. LUMINAIRE SYMBOLS THAT ARE SHOWN HALF-SHADED, OR LABELED "EM", ON THE PLAN(S) INDICATE LUMINAIRES THAT SERVE AS EMERGENCY LIGHTING. UNLESS SERVED BY A CIRCUIT ORIGINATING AT AN EMERGENCY PANELBOARD OR CENTRAL LIGHTING INVERTER, EMERGENCY LIGHTING LUMINAIRES SHALL BE PROVIDED WITH AN EMERGENCY BATTERY TO PROVIDE EMERGENCY ILLUMINATION FOR A MINIMUM OF 90 MINUTES.

B. INTEGRAL EMERGENCY BATTERIES SHALL MEET THE FOLLOWING MINIMUM PERFORMANCE REQUIREMENTS UNLESS OTHERWISE INDICATED:
- LINEAR FLUORESCENT LUMINAIRES: 1400 LUMENS, MINIMUM, PER LUMINAIRE.
- COMPACT FLUORESCENT LUMINAIRES: 1100 LUMENS, MINIMUM, PER LUMINAIRE.
- INTEGRATED LED LUMINAIRES RATED 1000 LUMENS OR LESS: 10 WATT, MINIMUM, OUTPUT.
- INTEGRATED LED LUMINAIRES RATED GREATER THAN 1000 LUMENS: 20 WATT, MINIMUM, OUTPUT.

C. ANY PROPOSED SUBSTITUTIONS FOR LUMINAIRES THAT ARE SELECTED BY OTHERS REQUIRE THE APPROVAL OF THE SPECIFYING ENTITY.

D. PROVIDE LIGHT EMITTING DIODES (LEDS) BINNED WITHIN A MAXIMUM THREE-STEP MACADAM ELLIPSE TO ENSURE COLOR CONSISTENCY AMONGST LUMINAIRES OF THE SAME TYPE AND LEDS THAT MEET UL STANDARD 8750 "LIGHT EMITTING DIODE EQUIPMENT FOR USE IN LIGHTING PRODUCTS," IES STANDARD LM-79 "ELECTRICAL AND PHOTOMETRIC MEASUREMENTS OF SOLID-STATE LIGHTING PRODUCTS," IES STANDARD LM-80 "MEASURING LUMEN MAINTENANCE OF LED LIGHT SOURCES," IES STANDARD TM-21 "PROJECTING LONG TERM LUMEN MAINTENANCE OF LED LIGHT SOURCES," AND ANSI C78.377 "SPECIFICATIONS FOR THE CHROMATICITY OF SOLID STATE LIGHTING PRODUCTS." LED LUMINAIRES SHALL BE MODULAR AND ALLOW FOR SEPARATE REPLACEMENT OF LED LAMPS AND DRIVERS. USER SERVICEABLE LED LAMPS AND DRIVERS SHALL BE REPLACEABLE FROM THE ROOM SIDE. LED DRIVERS SHALL BE ELECTRONIC-TYPE, LABELED AS COMPLIANT WITH RADIO FREQUENCY INTERFERENCE (RFI) REQUIREMENTS OF FCC TITLE 47 PART 15, AND COMPLY WITH NEMA SSL 1 "ELECTRONIC DRIVERS FOR LED DEVICES, ARRAYS, OR SYSTEMS." LED DRIVERS SHALL HAVE A SOUND RATING OF "A," HAVE A MINIMUM EFFICIENCY OF 85 PERCENT, AND SHALL HAVE A TOTAL HARMONIC DISTORTION (THD) OF LESS THAN 20 PERCENT AT ALL INPUT VOLTAGES.

## LIGHTING CONTROL DEVICE SCHEDULE

| MARK | CATALOG NUMBER | QUANTITY |
|---|---|---|
| HUB | HJS-O-FM | 1 |
| P2 | PJ2-2B-GWH-L01 | 1 |
| P2RL | PJ2-2BRL-GWH-L01 | 7 |
| P4 | PJ2-4B-GWH-EL2 | 1 |
| DL | LRF2-DCRB-WH | 1 |
| OS | LRF2-OCR2B-P-WH | 5 |

GENERAL NOTES:

A. SEE LUTRON ONE-LINE DIAGRAMS SHEETS E621, E622, E623 FOR ADDITIONAL INFORMATION.

## LOAD CONTROLLER SCHEDULE

| MARK | CATALOG NUMBER | QUANTITY |
|---|---|---|
| 6D | MRF2S-6ND-120-GR | 5 |
| 6D ELV | MRF2S-6ELV-120-GR | 1 |
| 20S | RMJS-20R-DV-B | 8 |
| 8TN | RMJS-8TN-DV-B | 12 |

GENERAL NOTES:

A. SEE LUTRON ONE-LINE DIAGRAMS SHEETS E621, E622, E623 FOR ADDITIONAL INFORMATION.


Bergmeyer
www.bergmeyer.com
LA - 800 South Figueroa St. Suite 1100, Los Angeles, CA 90017 212.337.1090
BOS - 51 Sleeper St. 4th Floor, Boston, MA 02210 617.542.1025

CONSULTANTS:
Schnackel engineers
800-581-0963
www.schnackel.com
SE JOB# 200363


SEAL/ SIGNATURE:
STATE OF MISSOURI
GREGORY ROY SCHNACKEL
NUMBER E-026570
Date: 03/05/21
COA #: E-2009006642

| NO. | BY | DATE | DESCRIPTION |
|---|---|---|---|
| 1 | | 2021-03-09 | ADDENDUM #1 |
| | | 2021-01-11 | PERMIT/BID SET |
| | | 2020-12-21 | 75% SET |
| | | 2020-10-12 | DD SET |

SHAKE SHACK

SHAKE SHACK - LEE'S SUMMIT MO

LEE'S SUMMIT
MISSOURI
SHACK #1348

PERMIT/BID SET

LIGHTING SCHEDULES

| | |
|---|---|
| DRAWN BY: | AEH |
| CHECKED BY: | GRS |
| JOB NO: | 20068.00 |

E620

RELEASE FOR CONSTRUCTION
AS NOTED ON PLANS REVIEW
DEVELOPMENT SERVICES
LEE'S SUMMIT, MISSOURI
03/10/2021

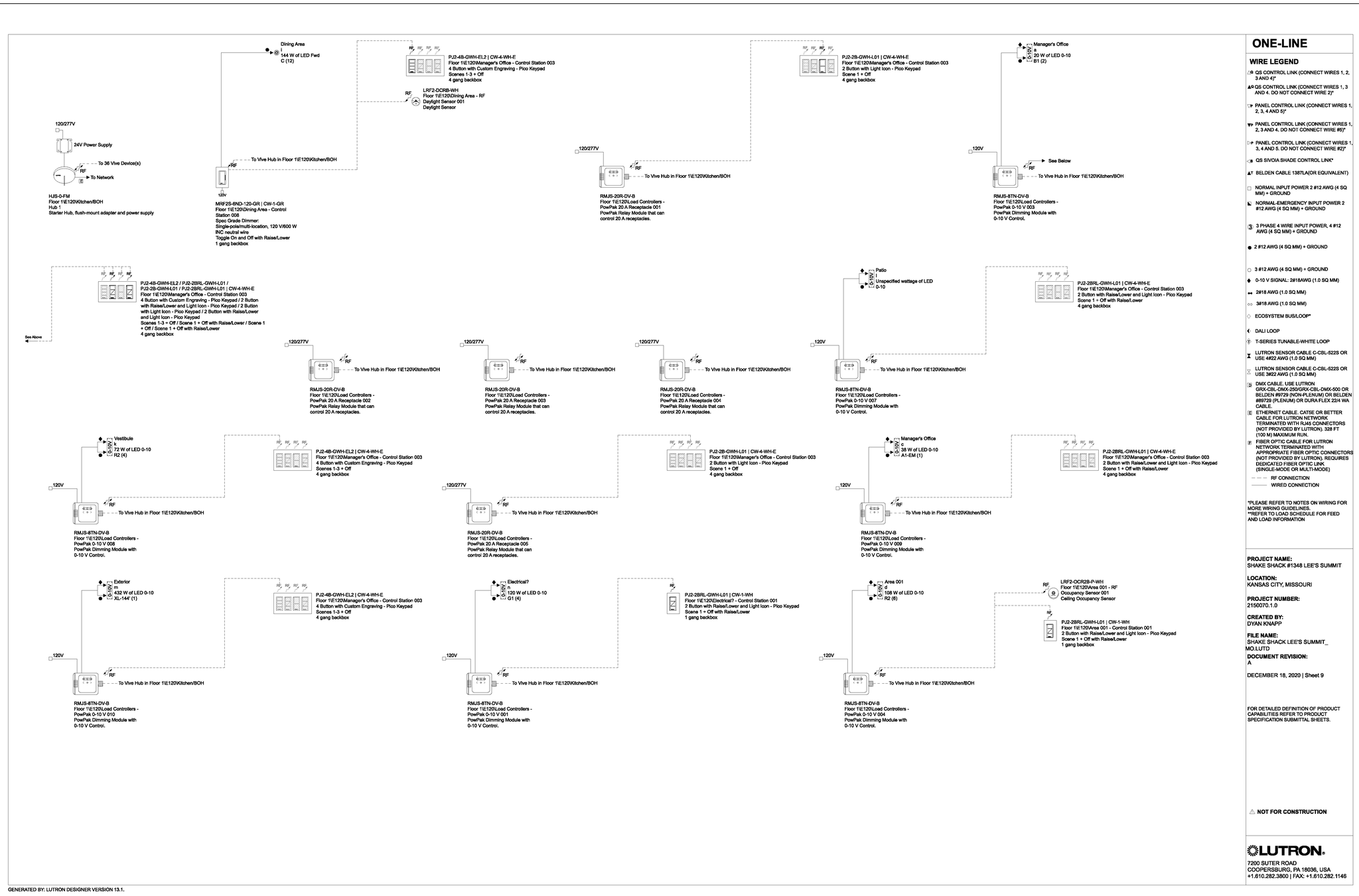


GENERATED BY: LUTRON DESIGNER VERSION 13.1.

## ONE-LINE

### WIRE LEGEND

- QS CONTROL LINK (CONNECT WIRES 1, 2, 3 AND 4)*
- QS CONTROL LINK (CONNECT WIRES 1, 3 AND 4. DO NOT CONNECT WIRE 2)*
- PANEL CONTROL LINK (CONNECT WIRES 1, 2, 3, 4 AND 5)*
- PANEL CONTROL LINK (CONNECT WIRES 1, 2, 3 AND 4. DO NOT CONNECT WIRE #6)*
- PANEL CONTROL LINK (CONNECT WIRES 1, 3, 4 AND 5. DO NOT CONNECT WIRE #2)*
- QS SIVOIA SHADE CONTROL LINK*
- BELDEN CABLE 1387LA(OR EQUIVALENT)
- NORMAL INPUT POWER 2 #12 AWG (4 SQ MM) + GROUND
- NORMAL-EMERGENCY INPUT POWER 2 #12 AWG (4 SQ MM) + GROUND
- 3 PHASE 4 WIRE INPUT POWER, 4 #12 AWG (4 SQ MM) + GROUND
- 2 #12 AWG (4 SQ MM) + GROUND
- 3 #12 AWG (4 SQ MM) + GROUND
- 0-10 V SIGNAL: 2#18AWG (1.0 SQ MM)
- 2#18 AWG (1.0 SQ MM)
- 3#18 AWG (1.0 SQ MM)
- ECOSYSTEM BUS/LOOP*
- DALI LOOP
- T-SERIES TUNABLE-WHITE LOOP
- LUTRON SENSOR CABLE C-CBL-522S OR USE 4#22 AWG (1.0 SQ MM)
- LUTRON SENSOR CABLE C-CBL-522S OR USE 3#22 AWG (1.0 SQ MM)
- D DMX CABLE. USE LUTRON GRX-CBL-DMX-250/GRX-CBL-DMX-500 OR BELDEN #9729 (NON-PLENUM) OR BELDEN #89729 (PLENUM) OR DURA-FLEX 22/4 WA CABLE.
- E ETHERNET CABLE. CAT5E OR BETTER CABLE FOR LUTRON NETWORK TERMINATED WITH RJ45 CONNECTORS (NOT PROVIDED BY LUTRON). 328 FT (100 M) MAXIMUM RUN.
- F FIBER OPTIC CABLE FOR LUTRON NETWORK TERMINATED WITH APPROPRIATE FIBER OPTIC CONNECTORS (NOT PROVIDED BY LUTRON). REQUIRES DEDICATED FIBER OPTIC LINK (SINGLE-MODE OR MULTI-MODE)
- RF CONNECTION
- WIRED CONNECTION

*PLEASE REFER TO NOTES ON WIRING FOR MORE WIRING GUIDELINES.
**REFER TO LOAD SCHEDULE FOR FEED AND LOAD INFORMATION

**PROJECT NAME:**
SHAKE SHACK #1348 LEE'S SUMMIT

**LOCATION:**
KANSAS CITY, MISSOURI

**PROJECT NUMBER:**
2150070.1.0

**CREATED BY:**
DYAN KNAPP

**FILE NAME:**
SHAKE SHACK LEE'S SUMMIT_MO.LUTD

**DOCUMENT REVISION:**
A

DECEMBER 18, 2020 | Sheet 9

FOR DETAILED DEFINITION OF PRODUCT CAPABILITIES REFER TO PRODUCT SPECIFICATION SUBMITTAL SHEETS.

⚠ **NOT FOR CONSTRUCTION**

LUTRON
7200 SUTER ROAD
COOPERSBURG, PA 18036, USA
+1.610.282.3800 | FAX: +1.610.282.1146

Bergmeyer
www.bergmeyer.com
BOS - 51 Sleeper St. 6th Floor, Boston, MA 02210 617.542.1025
LA - 800 South Figueroa St. Suite 1080, Los Angeles, CA 90017 212.337.1090

CONSULTANTS:
Schnackel engineers
800-581-0963
www.schnackel.com
SE JOB# 200363

SEAL/ SIGNATURE:
STATE OF MISSOURI
GREGORY ROY SCHNACKEL
NUMBER E-026570
Date: 03/05/21
COA #: E-2009006642

| NO. | BY | DATE | DESCRIPTION |
|---|---|---|---|
| 1 | | 2021-03-09 | ADDENDUM #1 |
| | | 2021-01-11 | PERMIT/BID SET |
| | | 2020-12-21 | 75% SET |
| | | 2020-10-12 | DD SET |

SHAKE SHACK

SHAKE SHACK - LEE'S SUMMIT MO

LEE'S SUMMIT
MISSOURI
SHACK #1348

PERMIT/BID SET

LUTRON VIVE ONE-LINE

| | |
|---|---|
| DRAWN BY: | AEH |
| CHECKED BY: | GRS |
| JOB NO: | 20068.00 |

E621

RELEASE FOR CONSTRUCTION
AS NOTED ON PLANS REVIEW
DEVELOPMENT SERVICES
LEE'S SUMMIT, MISSOURI
03/10/2021

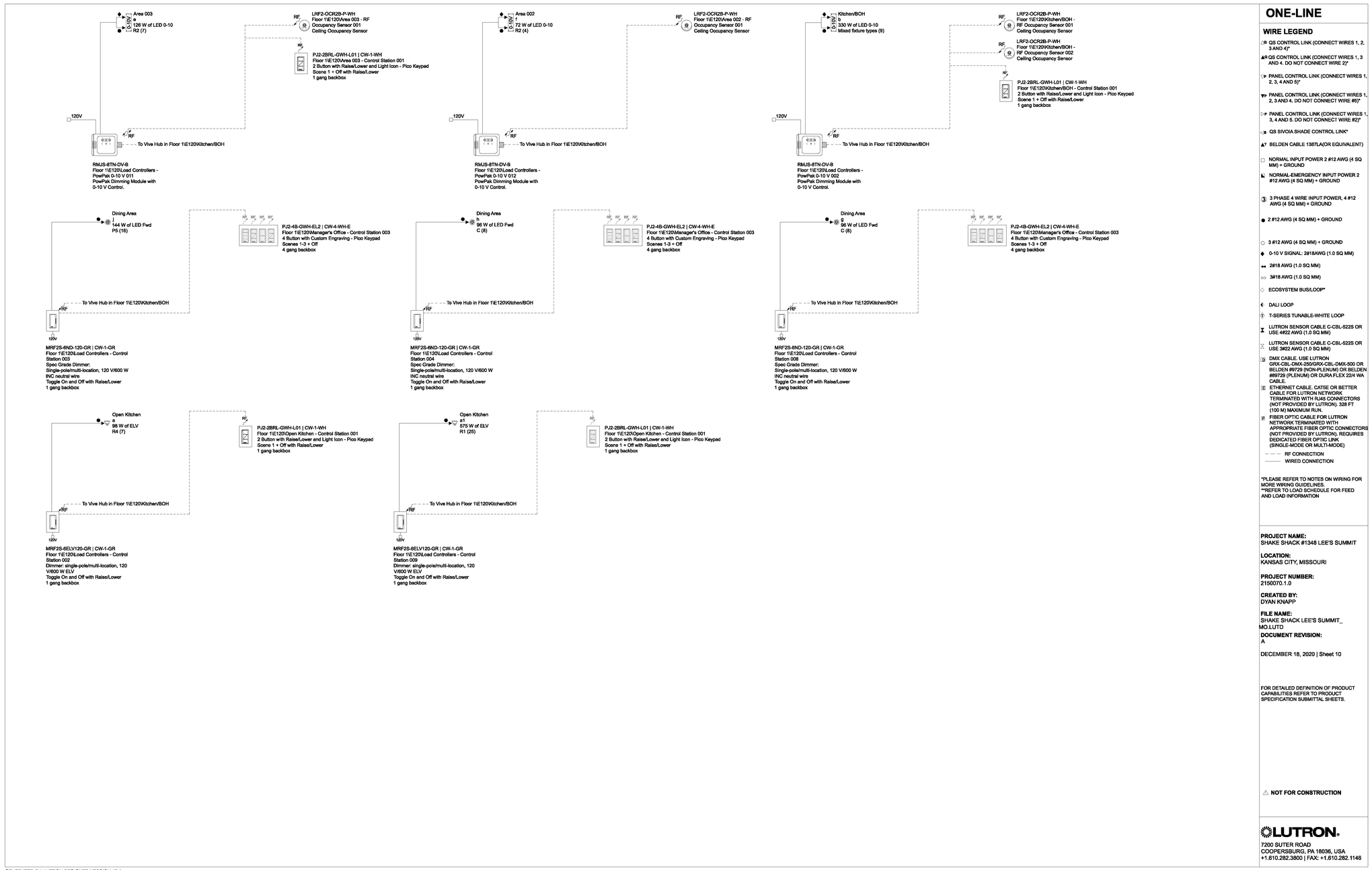


GENERATED BY: LUTRON DESIGNER VERSION 13.1.

# ONE-LINE

## WIRE LEGEND

- QS CONTROL LINK (CONNECT WIRES 1, 2, 3 AND 4)*
- QS CONTROL LINK (CONNECT WIRES 1, 3 AND 4. DO NOT CONNECT WIRE 2)*
- PANEL CONTROL LINK (CONNECT WIRES 1, 2, 3, 4 AND 5)*
- PANEL CONTROL LINK (CONNECT WIRES 1, 2, 3 AND 4. DO NOT CONNECT WIRE #5)*
- PANEL CONTROL LINK (CONNECT WIRES 1, 3, 4 AND 5. DO NOT CONNECT WIRE #2)*
- QS SIVOIA SHADE CONTROL LINK*
- BELDEN CABLE 1387LA(OR EQUIVALENT)
- NORMAL INPUT POWER 2 #12 AWG (4 SQ MM) + GROUND
- NORMAL-EMERGENCY INPUT POWER 2 #12 AWG (4 SQ MM) + GROUND
- 3 PHASE 4 WIRE INPUT POWER, 4 #12 AWG (4 SQ MM) + GROUND
- 2 #12 AWG (4 SQ MM) + GROUND
- 3 #12 AWG (4 SQ MM) + GROUND
- 0-10 V SIGNAL: 2#18AWG (1.0 SQ MM)
- 2#18 AWG (1.0 SQ MM)
- 3#18 AWG (1.0 SQ MM)
- ECOSYSTEM BUS/LOOP*
- DALI LOOP
- T-SERIES TUNABLE-WHITE LOOP
- LUTRON SENSOR CABLE C-CBL-522S OR USE 4#22 AWG (1.0 SQ MM)
- LUTRON SENSOR CABLE C-CBL-522S OR USE 3#22 AWG (1.0 SQ MM)
- D DMX CABLE. USE LUTRON GRX-CBL-DMX-250/GRX-CBL-DMX-500 OR BELDEN #89729 (NON-PLENUM) OR BELDEN #89729 (PLENUM) OR DURA-FLEX 22/4 WA CABLE.
- E ETHERNET CABLE. CAT5E OR BETTER CABLE FOR LUTRON NETWORK TERMINATED WITH RJ45 CONNECTORS (NOT PROVIDED BY LUTRON). 328 FT (100 M) MAXIMUM RUN.
- F FIBER OPTIC CABLE FOR LUTRON NETWORK TERMINATED WITH APPROPRIATE FIBER OPTIC CONNECTORS (NOT PROVIDED BY LUTRON). REQUIRES DEDICATED FIBER OPTIC LINK (SINGLE-MODE OR MULTI-MODE)
- RF CONNECTION
- WIRED CONNECTION

*PLEASE REFER TO NOTES ON WIRING FOR MORE WIRING GUIDELINES.
**REFER TO LOAD SCHEDULE FOR FEED AND LOAD INFORMATION

**PROJECT NAME:**
SHAKE SHACK #1348 LEE'S SUMMIT

**LOCATION:**
KANSAS CITY, MISSOURI

**PROJECT NUMBER:**
2150070.1.0

**CREATED BY:**
DYAN KNAPP

**FILE NAME:**
SHAKE SHACK LEE'S SUMMIT_MO.LUTD

**DOCUMENT REVISION:**
A

DECEMBER 18, 2020 | Sheet 10

FOR DETAILED DEFINITION OF PRODUCT CAPABILITIES REFER TO PRODUCT SPECIFICATION SUBMITTAL SHEETS.

⚠ **NOT FOR CONSTRUCTION**

LUTRON.
7200 SUTER ROAD
COOPERSBURG, PA 18036, USA
+1.610.282.3800 | FAX: +1.610.282.1146

Bergmeyer
BOS - 51 Sleeper St. 6th Floor Boston, MA 02210 617.542.1025
LA - 800 South Figueroa St. Suite 1100 Los Angeles, CA 90017 212.337.1090
www.bergmeyer.com

CONSULTANTS:
Schnackel engineers
800-581-0963
www.schnackel.com
SE JOB# 200363

SEAL/ SIGNATURE:
STATE OF MISSOURI
GREGORY ROY SCHNACKEL
NUMBER E-026570
Date: 03/05/21
COA #: E-2009006642

| NO. | BY | DATE | DESCRIPTION |
|---|---|---|---|
| 1 | | 2021-03-09 | ADDENDUM #1 |
| | | 2021-01-11 | PERMIT/BID SET |
| | | 2020-12-21 | 75% SET |
| | | 2020-10-12 | DD SET |

SHAKE SHACK

SHAKE SHACK - LEE'S SUMMIT MO

LEE'S SUMMIT
MISSOURI
SHACK #1348

PERMIT/BID SET

LUTRON VIVE ONE-LINE

| | |
|---|---|
| DRAWN BY: | AEH |
| CHECKED BY: | GRS |
| JOB NO: | 20068.00 |

E622