RESIDENTIAL AREA:			
RESIDENTIAL, LIVING AREA		1390	
RESIDENTIAL, FINISHED BASEMENT		925	
RESIDENTIAL, UN-FINISHED BASEMENT		273	
RESIDENTIAL, GARAGE		710	
RESIDENTIAL, LIVING AREA 2		1717	
		NUMBER OF BATHROOMS	4.5
ROOFING MATERIAL	COMP	NUMBER OF STORIES	2
NUMBER OF BEDROOMS	5	TOTAL LIVING AREA	4032
NUMBER OF LIVING UNITS	1		
SEWER CONNECTION FEE			

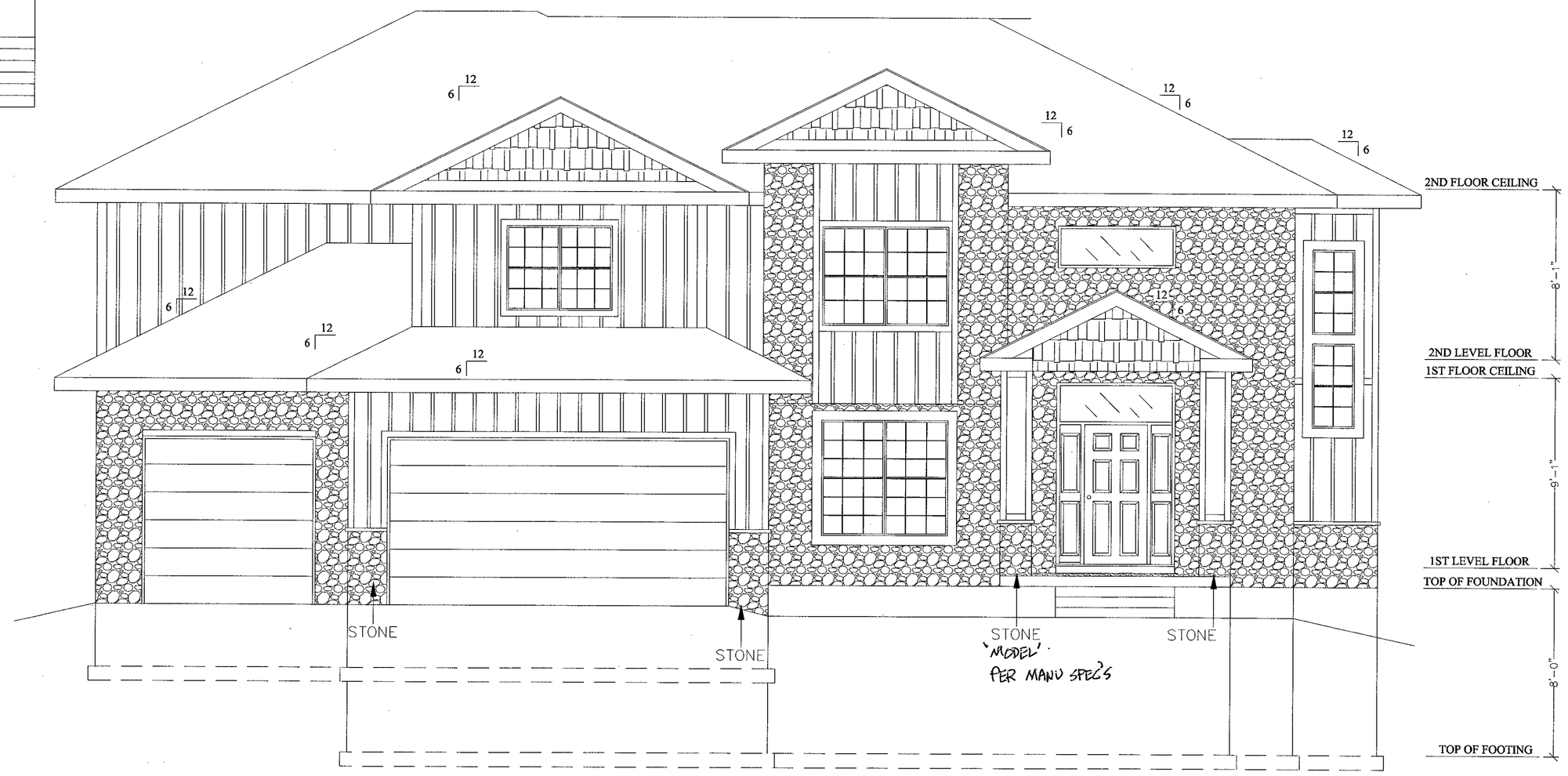

FRONT ELEVATION

SCALE: 1/4" = 1'-0"

COMP ROOF

ROOF & SOFFIT VENTS PER CODE

BACK ELEVATION

SCALE: 1/4" = 1'-0"

SVF 63

3114 SW BLUE RIBBON ST

LSMO

DESCRIPTION: FRONT/REAR ELEVATIONS

MODEL: VISH

DATE: 12/20/20

ARCHITECT IS NOT RESPONSIBLE FOR THE STRUCTURAL ELEMENTS OF THESE PLANS. A STRUCTURAL ENGINEER MAY NEED TO VERIFY ALL STRUCTURAL ASPECTS OF THESE PRINTS BEFORE CONSTRUCTION BEGINS. FIELD CONDITIONS MAY BE DIFFERENT FROM PLAN. ALL STATE AND LOCAL CODES TAKE PRECEDENCE OVER THESE PLANS. CONTRACTOR WILL BE RESPONSIBLE FOR PLAN INTEGRITY AND CODE COMPLIANCE

BUILD SET

THIS DRAWING IS THE PROPERTY OF BILLY SPELLERBERG AND IS NOT TO BE REPRODUCED, MODIFIED, OR USED FOR ANY OTHER PROJECT, OR EXTENTION OF THIS PROJECT, EXCEPT BY AGREEMENT WITH THIS COMPANY.

STATE OF MISSOURI
KENNETH SIDOROWICZ
NUMBER E-19986
REGISTERED PROFESSIONAL ENGINEER
2/24/21

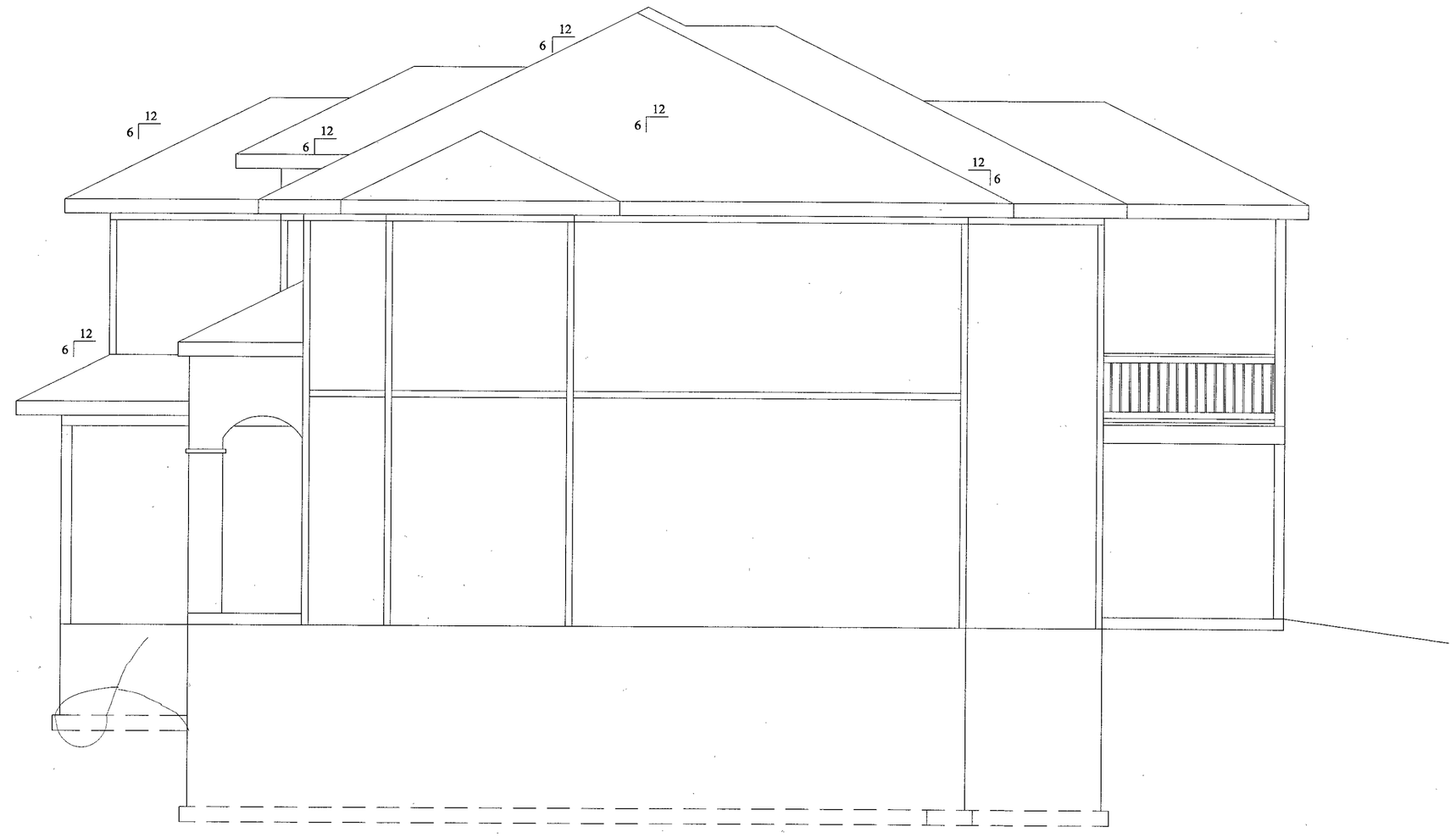

RIGHT ELEVATION
SCALE: 1/4" = 1'-0"

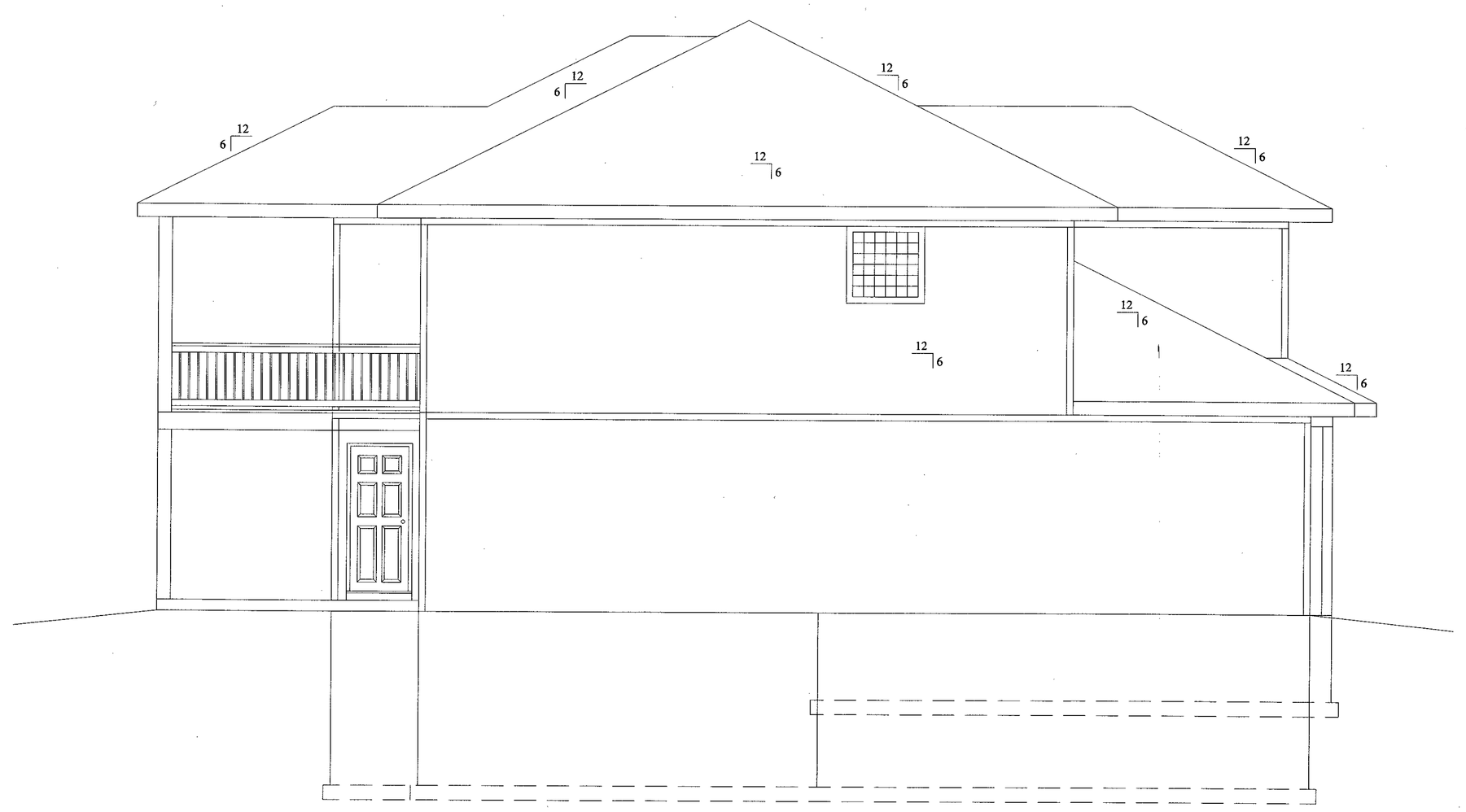

LEFT ELEVATION
SCALE: 1/4" = 1'-0"

SVF 63
3114 SW BLUE RIBBON ST
LSMO

DESCRIPTION: LEFT/RIGHT ELEVATIONS

MODEL: VISH

DATE: 12/20/20

ARCHITECT IS NOT RESPONSIBLE FOR THE STRUCTURAL ELEMENTS OF THESE PLANS. A STRUCTURAL ENGINEER MAY NEED TO VERIFY ALL STRUCTURAL ASPECTS OF THESE PRINTS BEFORE CONSTRUCTION BEGINS. FIELD CONDITIONS MAY BE DIFFERENT FROM PLAN. ALL STATE AND LOCAL CODES TAKE PRECEDENCE OVER THESE PLANS. CONTRACTOR WILL BE RESPONSIBLE FOR PLAN INTEGRITY AND CODE COMPLIANCE

BUILD SET

STATE OF MISSOURI
KENNETH SIDOROWICZ
NUMBER E-19986
REGISTERED PROFESSIONAL ENGINEER
2/19/21

THIS DRAWING IS THE PROPERTY OF BILLY SPELLERBERG AND IS NOT TO BE REPRODUCED, MODIFIED, OR USED FOR ANY OTHER PROJECT, OR EXTENTION OF THIS PROJECT, EXCEPT BY AGREEMENT WITH THIS COMPANY.

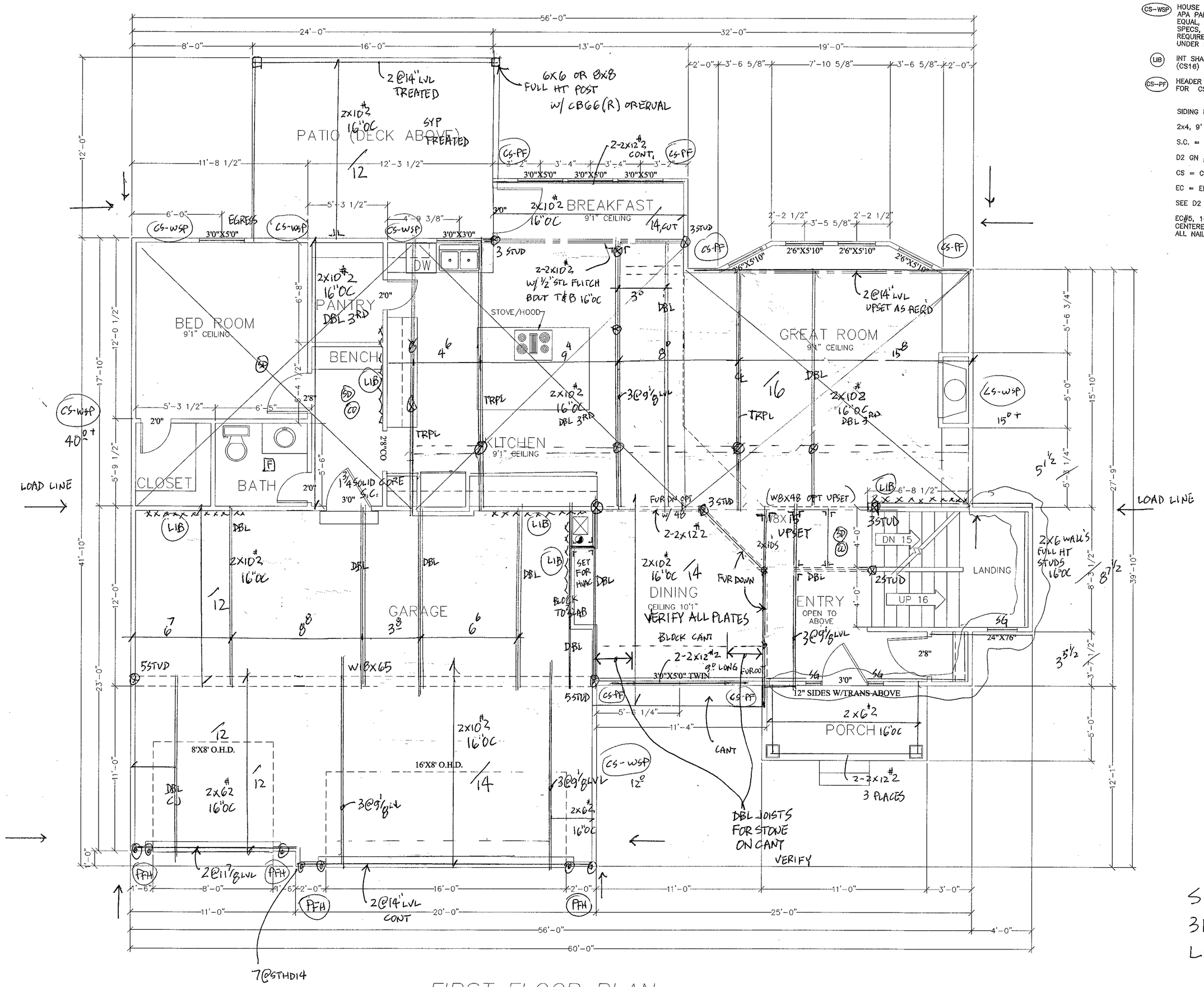

FIRST FLOOR PLAN

SCALE: 1/4" = 1'-0"

VERIFY ALL PLATES

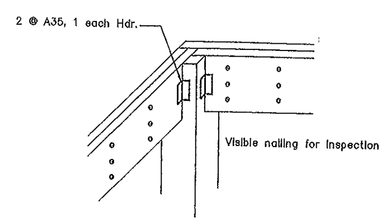

DF/L MIN

CS-WSP HOUSE IS SHEATHED W/ 7/16" OSB APA PANELS, SMART PANEL OR EQUAL INSTALLED PER MANU. SPECS, SHIP LAPPED PANELS REQUIRE NAILING OF OVER AND UNDER PANELS SEPARATELY.

LIB INT SHALL BE SIMPSON STRAP (CS16)

CS-PF HEADER LENGTHS ARE SHOWN FOR CS-PF

SIDING LAPS RIM

2x4, 9' PLATE, FULL HT. STUDS

S.C. = SELF CLOSING

D2 GN #25 FOR WINDOWS

CS = CONTINUOUSLY SHEATHED

EC = END CONDITION

SEE D2 FOR INSULATION VALUES

EC#5, 16" LONG CS16 STRAP, CENTERED ON SUBFLOOR, FILL ALL NAIL HOLES.

SVF 63
3114 SW BLUE RIBBON
LSMO

STATE OF MISSOURI
KENNETH SIDOROWICZ
NUMBER E-19988
REGISTERED PROFESSIONAL ENGINEER
2/19/21

DESCRIPTION: FIRST FLOOR FRAMING

MODEL: VISH

DATE: 12/20/20

ARCHITECT IS NOT RESPONSIBLE FOR THE STRUCTURAL ELEMENTS OF THESE PLANS. A STRUCTURAL ENGINEER MAY NEED TO VERIFY ALL STRUCTURAL ASPECTS OF THESE PRINTS BEFORE CONSTRUCTION BEGINS. FIELD CONDITIONS MAY BE DIFFERENT FROM PLAN. ALL STATE AND LOCAL CODES TAKE PRECEDENCE OVER THESE PLANS. CONTRACTOR WILL BE RESPONSIBLE FOR PLAN INTEGRITY AND CODE COMPLIANCE

BUILD SET

THIS DRAWING IS THE PROPERTY OF BILLY SPELLERBERG AND IS NOT TO BE REPRODUCED, MODIFIED, OR USED FOR ANY OTHER PROJECT, OR EXTENTION OF THIS PROJECT, EXCEPT BY AGREEMENT WITH THIS COMPANY.

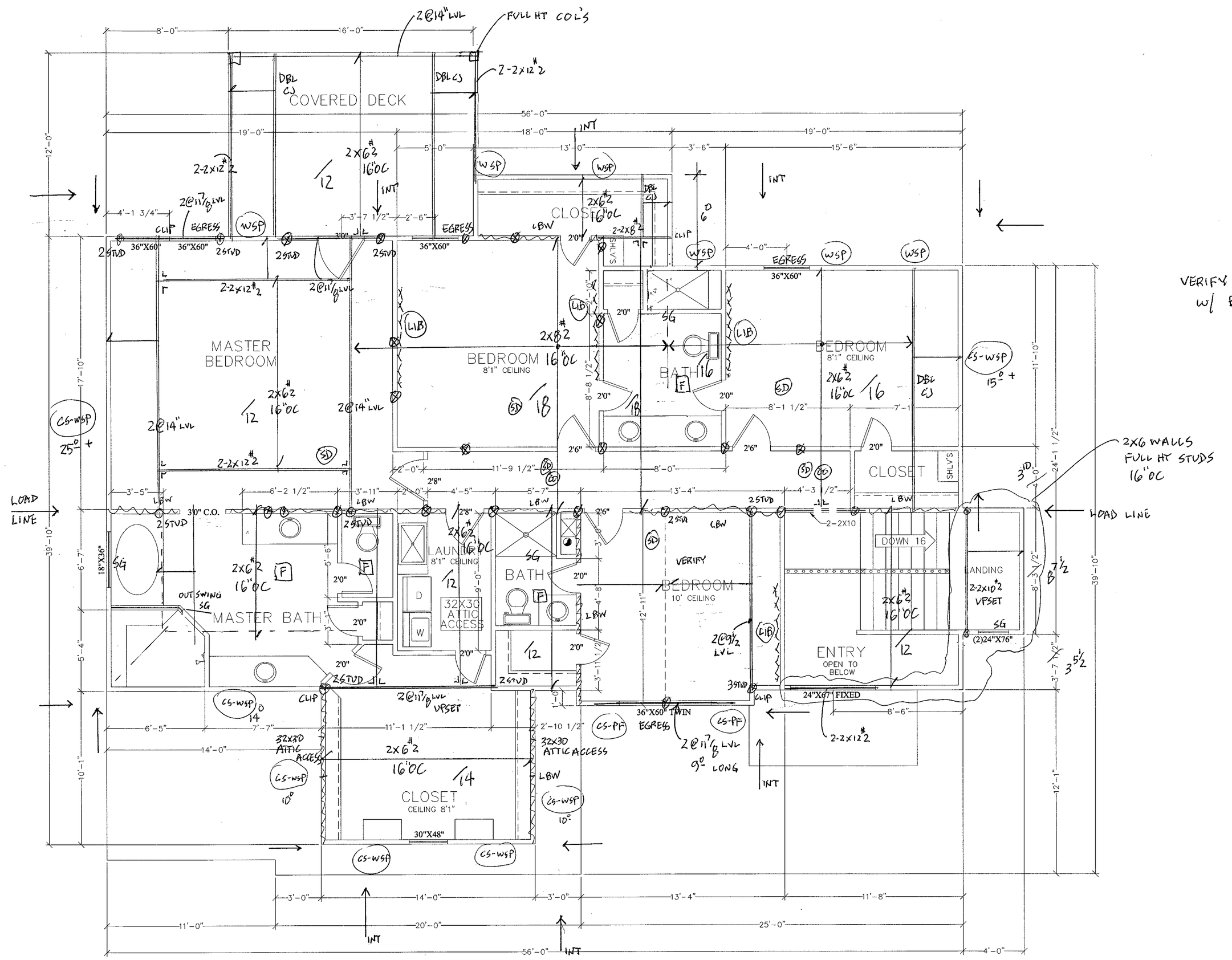

SECOND FLOOR PLAN

SCALE: 1/4" = 1'-0"

SVF 63

3114 SW BLUE RIBBON ST

LSMO

STATE OF MISSOURI
KENNETH SIDOROWICZ
NUMBER E-19986
REGISTERED PROFESSIONAL ENGINEER
2/14/21

DESCRIPTION:
SECOND FLOOR FRAMING
ROOF FRAMING PLAN

MODEL:
VISH

DATE:
12/20/20

ARCHITECT IS NOT RESPONSIBLE FOR THE STRUCTURAL ELEMENTS OF THESE PLANS. A STRUCTURAL ENGINEER MAY NEED TO VERIFY ALL STRUCTURAL ASPECTS OF THESE PRINTS BEFORE CONSTRUCTION BEGINS. FIELD CONDITIONS MAY BE DIFFERENT FROM PLAN. ALL STATE AND LOCAL CODES TAKE PRECEDENCE OVER THESE PLANS. CONTRACTOR WILL BE RESPONSIBLE FOR PLAN INTEGRITY AND CODE COMPLIANCE

BUILD SET

THIS DRAWING IS THE PROPERTY OF BILLY SPELLERBERG AND IS NOT TO BE REPRODUCED, MODIFIED, OR USED FOR ANY OTHER PROJECT, OR EXTENTION OF THIS PROJECT, EXCEPT BY AGREEMENT WITH THIS COMPANY.

BEAMS
FIELD VERIFY LENGTH

LENGTH	SIZE
24'11"	W8 X 15
30'0"	W18X45

2 POSTS ADJUSTIBLE

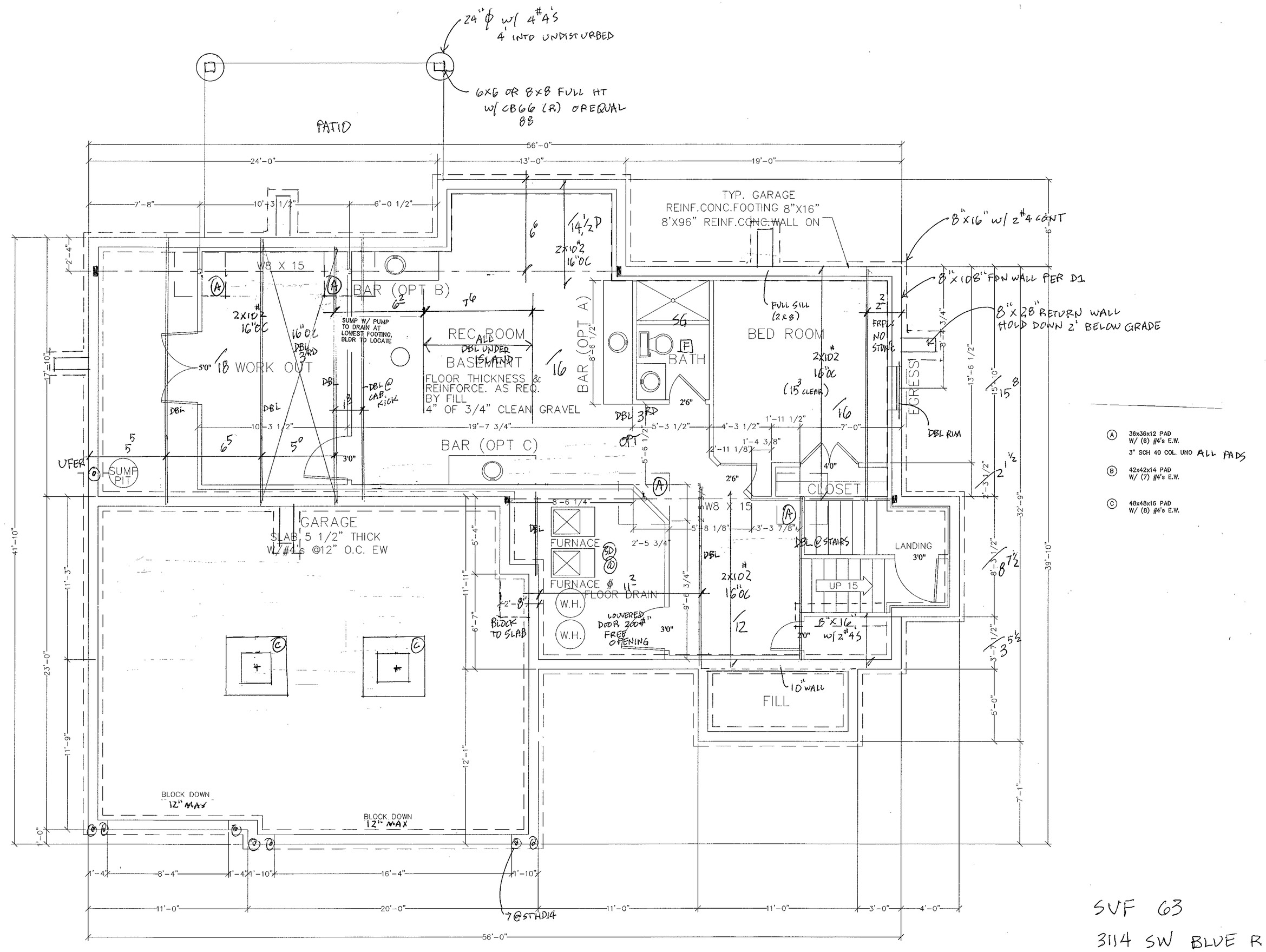

(A) 36x36x12 PAD
W/ (6) #4's E.W.
3" SCH 40 COL. UNO ALL PADS

(B) 42x42x14 PAD
W/ (7) #4's E.W.

(C) 48x48x16 PAD
W/ (8) #4's E.W.

FOUNDATION PLAN

SCALE: 1/4" = 1'-0"

SVF 63
3114 SW BLUE RIBBON
LSMO

STATE OF MISSOURI
KENNETH SIDOROWICZ
NUMBER E-19986
REGISTERED PROFESSIONAL ENGINEER
2/11/21

DESCRIPTION: FOUNDATION

MODEL: VISH

DATE: 12/20/20

ARCHITECT IS NOT RESPONSIBLE FOR THE STRUCTURAL ELEMENTS OF THESE PLANS. A STRUCTURAL ENGINEER MAY NEED TO VERIFY ALL STRUCTURAL ASPECTS OF THESE PRINTS BEFORE CONSTRUCTION BEGINS. FIELD CONDITIONS MAY BE DIFFERENT FROM PLAN. ALL STATE AND LOCAL CODES TAKE PRECEDENCE OVER THESE PLANS. CONTRACTOR WILL BE RESPONSIBLE FOR PLAN INTEGRITY AND CODE COMPLIANCE.

BUILD SET

THIS DRAWING IS THE PROPERTY OF BILLY SPELLERBERG AND IS NOT TO BE REPRODUCED, MODIFIED, OR USED FOR ANY OTHER PROJECT, OR EXTENTION OF THIS PROJECT, EXCEPT BY AGREEMENT WITH THIS COMPANY.

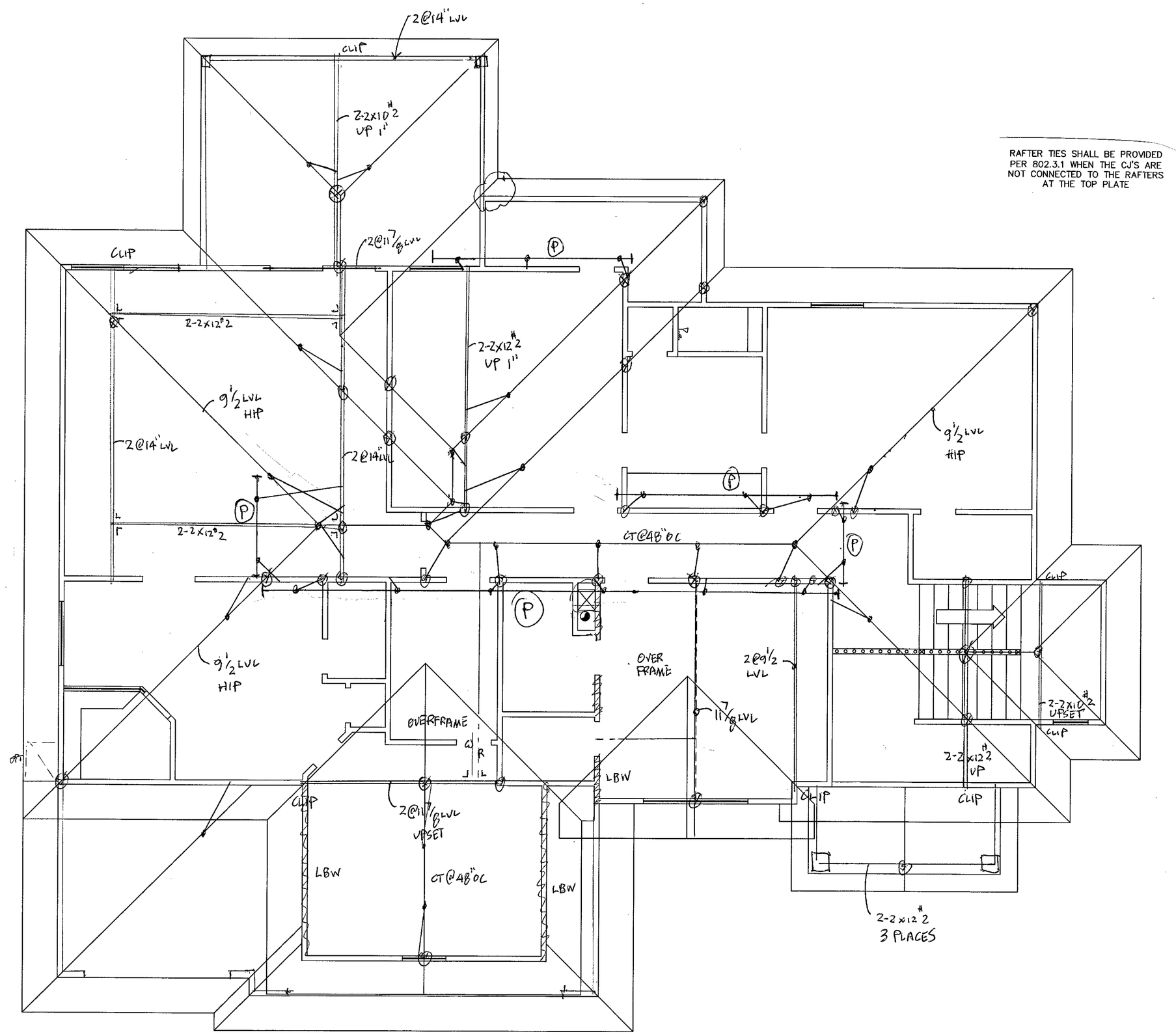

ROOF FRAMING PLAN

SCALE: 1/4" = 1'-0"

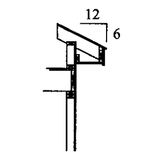

GARAGE SOFFIT

RAFTER TIES SHALL BE PROVIDED PER 802.3.1 WHEN THE CJ'S ARE NOT CONNECTED TO THE RAFTERS AT THE TOP PLATE

ROOF
ASPHALT SHINGLES — 2/12 MIN.
WOOD SHINGLES/SHAKES — 3/12 MIN
CONCRETE TILES — 2.5/12 MIN.
FLASH & COUNTERFLASH ALL ROOF PENETRATIONS AND INTERSECTIONS

RAFTERS & CEILING JOISTS
COLLAR TIES AT UPPER THIRD POINT @8' OC 2 x 4 MIN.
CEILING JOISTS ARE TURNED AS REQUIRED FOR RAFTER TIES

RIDGE/RAFTER HANGERS AND STRAPS AS REQ'D
OUTRIGGERS REQ'D @ GABLE END SOFFITS FOR COMP ROOF w/ 8@SOFFITS >= 16"
OUTRIGGERS REQ'D @ GABLE END SOFFITS FOR TILE ROOF

ATTIC VENTILATION
VENT EACH ENCLOSED ATTIC SPACE
NET AREA OPENING = 1/150th OF VENTED AREA

UNLESS NOTED,
RAFTERS ARE 2 X 6 @ 24" OR/L @ 16" OC
MAX SPAN 11' +/-

PROVIDE VERTICAL LOAD SUPPORT AT THE NOTED LOAD POINTS FOR HIPS, VALLEYS, PURLINS & RIDGES
LIET-IN SUPPORT LBS TO PURLIN
ALL HIPS, VALLEYS & RIDGES ARE SIZED FOR THE RAFTER DEPTH, PITCH, AND LOAD } ALL 2x8 UND

PURLIN	COMP LBS OC	TILE LBS OC
2 X 6	6'-0"	--
2 X 8	8'-0"	6'-0"
2 X 10 @1	9'-0"	--
2 X 10 @2	9'-0"	8'-0"

SUPPORT LBS	COMP MAX. LENGTH	TILE MAX. LENGTH
2 X 4 w/ 2 X 4 T-BRACE	9'-0"	7'-0"
2 X 6 w/ 2 X 4 T-BRACE	9'-0"	8'-0"
2 X 6 w/ 2 X 6 T-BRACE	12'-0"	10'-10"
2 X 8 w/ 2 X 4 T-BRACE	9'-0"	8'-0"
2 X 8 w/ 2 X 6 T-BRACE	12'-0"	10'-0"

HEEL JOINT CONNECTION FACTOR

H_a / H_R	--
1/3	1.0
1/4	1.03
1/5	1.06
1/6	1.0
1/10	1.11

1/10 ON LBW

H_a = HEIGHT OF CEILING JOISTS OR RAFTER TIES MEASURED VERTICALLY ABOVE TOP OF RAFTER SUPPORT WALL

H_R = HEIGHT OF ROOF RIDGE MEASURED VERTICALLY ABOVE THE TOP OF THE RAFTER SUPPORT WALL

*ALL ROOF FRAMING MEMBERS ARE SIZED AS BEAMS AND BRACED TO LBWs, HEADERS OR OTHER STRUCTURE

SVF 63
3114 SW BLUE RIBBON
LSMD

STATE OF MISSOURI
KENNETH SIDOROWICZ
NUMBER E-19986
REGISTERED PROFESSIONAL ENGINEER
2/14/21

DESCRIPTION: FIRST FLOOR FRAMING

MODEL: VISH

DATE: 12/20/20

ARCHITECT IS NOT RESPONSIBLE FOR THE STRUCTURAL ELEMENTS OF THESE PLANS. A STRUCTURAL ENGINEER MAY NEED TO VERIFY ALL STRUCTURAL ASPECTS OF THESE PRINTS BEFORE CONSTRUCTION BEGINS. FIELD CONDITIONS MAY BE DIFFERENT FROM PLAN. ALL STATE AND LOCAL CODES TAKE PRECEDENCE OVER THESE PLANS. CONTRACTOR WILL BE RESPONSIBLE FOR PLAN INTEGRITY AND CODE COMPLIANCE

BUILD SET

THIS DRAWING IS THE PROPERTY OF BILLY SPELLERBERG AND IS NOT TO BE REPRODUCED, MODIFIED, OR USED FOR ANY OTHER PROJECT, OR EXTENTION OF THIS PROJECT, EXCEPT BY AGREEMENT WITH THIS COMPANY.

DIVISION 1 — GENERAL REQUIREMENTS

1. DESIGN AND CONSTRUCTION WORK FOR THIS PROJECT SHALL CONFORM TO THE REQUIREMENTS OF THE 2018 IRC.
2. FURNISH ALL LABOR, MATERIALS, AND EQUIPMENT NECESSARY TO COMPLETE THE WORK AS SHOWN OR INFERRED BY THE DRAWINGS.
3. DESIGN FACTORS:
   A) GROUND SNOW LOAD (INCLUDING DRIFTING SNOW)__20 PSF
   B) WIND SPEED (EXPOSURE B)_____115 MPH
   C) SEISMIC CATEGORY (A), GROUND ACCELERATION = NA
4. DESIGN LOADS (PSF, UNLESS NOTED OTHERWISE):
   A) ROOF (LL/DL)_____SEE TABLE
   B) FLOOR (LL/DL)_____SEE TABLE
   C) CEILING (LL/DL)_____SEE TABLE, (0/10 TRUSSES)
5. DO NOT SCALE DRAWINGS. IF DIMENSIONS ARE IN QUESTION, OBTAIN CLARIFICATION FROM A / E BEFORE CONTINUING CONSTRUCTION.
6. THE CONTRACTOR SHALL EXAMINE ACTUAL JOB CONDITIONS AND BE RESPONSIBLE FOR VERIFYING ALL DIMENSIONS AND ELEVATIONS SHOWN ON THE PLANS. IF ERRORS, OMISSIONS, OR DISCREPANCIES ARE FOUND THEY SHALL BE REPORTED TO THE DESIGN PROFESSIONAL BEFORE PROCEEDING WITH THE WORK.
7. DIMENSIONS FOR NEW CONSTRUCTION ARE TO FACE OF FINISH OR COLUMNS AND FACE OF CONCRETE, WOOD, OR MASONRY WALLS UNLESS OTHERWISE INDICATED. DIMENSIONS INDICATE NOMINAL DIMENSIONS RATHER THAN ACTUAL DIMENSIONS.
8. CONTRACTOR IS RESPONSIBLE FOR COORDINATING ALL TRADES EVEN IF THE TRADE IS UNDER A SEPARATE CONTRACT.
9. PROVIDE SUFFICIENT STUDS AND BLOCKING WHERE REQUIRED TO SUPPORT EQUIPMENT AND/OR MISCELLANEOUS ITEMS, IE., LOAD POINTS, TYPICAL CASEWORK, CABINETS, GRAB BARS ETC.
10. PRETREAT FOUNDATION FOR TERMITES AS REQUIRED.
11. GARAGE DOORS AND FRAMES SHALL BE DESIGNED AND INSTALLED TO MEET THE 115 MPH WIND LOAD RESISTANCE REQUIREMENTS OF DASMA 108 AND ASTM E 330.
12. ALL EXTERIOR DOORS, INCLUDING THE DOOR LEADING FROM THE GARAGE TO THE DWELLING UNIT, SHALL INCORPORATE THE PHYSICAL SECURITY PROVISIONS OF THE JURISDICTION IN WHICH THE CONSTRUCTION TAKES PLACE.

DIVISION 2 — EARTHWORK

1. ALL PROPERTY MARKERS SHALL BE EXPOSED.
2. ALL FOOTINGS ARE DESIGNED TO BEAR ON NATURAL UNDISTURBED SOIL CAPABLE OF ADEQUATELY SUSTAINING A MINIMUM BEARING PRESSURE OF 1500 PSF. IF SUITABLE UNDISTURBED BEARING CAPACITY IS NOT ENCOUNTERED AT THE ELEVATION INDICATED ON THE DRAWINGS, CONTRACTOR SHALL NOTIFY THE ENGINEER OF RECORD IMMEDIATELY.
3. ALL TOPSOIL, ORGANIC MATERIAL, AND EXISTING STRUCTURES SHALL BE REMOVED FROM BUILDING AREA AND FROM AREAS TO BE PAVED. STOCKPILE ALL TOPSOIL FOR REUSE.
4. REFERENCE THE SOILS REPORT FOR ALL FILL CONDITIONS.
5. OVEREXCAVATE BUILDING AREA BELOW SLAB SUBGRADE ELEVATION AND REPLACE WITH MATERIAL PER SOILS REPORT, VERIFY.
6. SITE EROSION CONTROL SHALL COMPLY WITH ALL STATE AND LOCAL ORDINANCES.
7. IN-SITU SOIL CONDITIONS, SEE SOILS REPORT OR 1,500 PSF BEARING & 60 PCF EQUIVALENT FLUID WEIGHT.
8. SOIL CONDITIONS AT THE DEPTH OF EXCAVATION FOR THE FOOTING SHALL BE UNIFORM AND CONSISTENT. NOTIFY THE ENGINEER OF RECORD OF ANY INCONSISTENCIES.
9. CONTRACTOR SHALL BE RESPONSIBLE FOR REMOVING AND DISPOSING OF ANY EXCESS EXCAVATION MATERIALS AND FOR OBTAINING AND SUPPLYING ADDITIONAL FILL MATERIAL AS REQUIRED.

DIVISION 3 — CONCRETE

1. ALL CONCRETE WORK SHALL CONFORM TO THE REQUIREMENTS OF ACI 318 "BUILDING CODE REQUIREMENTS FOR REINFORCED CONCRETE" AND ACI 332 "REQUIREMENTS FOR RESIDENTIAL CONCRETE CONSTRUCTION."
2. CONCRETE MATERIALS SHALL COMPLY WITH:
   A) CEMENT — ASTM C 150 TYPE 1
   B) AGGREGATE — ASTM C 33, MAXIMUM AGGREGATE SIZE ¾"
   C) WATER — POTABLE, WATER/CEMENT RATIO .5 (MAX.)
   D) AIR-ENTRAINING ADMIXTURE — ASTM C 260
   E) WATER-REDUCING ADMIXTURE — ASTM C 494, INCLUDING SUPERPLASTICIZERS.
   F) FLY ASH — ASTM C 618, CLASS C
3. CONCRETE SHALL DEVELOP THE FOLLOWING MINIMUM 28 DAY DESIGN COMPRESSIVE STRENGTH (f'c):

	TYPE OF CONSTRUCTION	COMP. STRENGTH (f'c)
A)	FOOTINGS, WALLS, AND SLABS	SEE TABLE
B)	EXTERIOR SLABS AND CURBS (AIR-ENTRAINED CONCRETE)	SEE TABLE

   CONCRETE PROPORTIONS SHALL BE ESTABLISHED ON THE BASIS OF FIELD EXPERIENCE AND/OR TRIAL MIXTURES IN ACCORDANCE WITH ACI 318-89 SECTIONS 5.2 AND 5.3. WHEN FLY ASH IS UTILIZED IN THE MIX, MIX SHALL CONTAIN A WATER-REDUCER. FLY ASH SHALL BE ADDED AT THE RATE OF NOT MORE THAN 100 POUNDS PER CUBIC YARD AND CEMENT SHALL BE REDUCED BY NOT MORE THAN 15 PERCENT BY WEIGHT.
4. PROPORTION AND DESIGN MIXES TO RESULT IN CONCRETE SLUMP AT A POINT OF PLACEMENT OF NOT MORE THAN 4" TO 5".
5. USE AIR-ENTRAINING ADMIXTURES IN EXTERIOR EXPOSED CONCRETE TO RESULT IN CONCRETE AT POINT OF PLACEMENT HAVING AIR CONTENT OF 5 TO 7 PERCENT ENTRAINED AIR.
6. ALL PLUMBING AND ELECTRICAL ROUGH-INS MUST BE COMPLETE, INSPECTED AND APPROVED BEFORE REQUESTING THE SLAB INSPECTION.
7. CONCRETE WORK EXECUTION:
   A) MINIMUM CONCRETE COVER FOR REINFORCING SHALL BE, UNLESS NOTED OTHERWISE ON DRAWINGS:
      CAST AGAINST AND EXPOSED TO EARTH_____3"
      EXPOSED TO EARTH OR WEATHER_____2"
      NOT EXPOSED TO EARTH OR WEATHER_____1 ½"
   B) IN CORNERS OF GRADE BEAMS PROVIDE CORNER REINFORCEMENT. LAP TWO FEET EACH DIRECTION IN OUTSIDE FACE, MATCHING SIZE AND SPACING OF HORIZONTAL REINFORCEMENT.
   C) PROVIDE CONTROL JOINTS IN SLABS-ON-GRADE AT NOT GREATER THAN 20 FEET ON CENTER IN EACH DIRECTION. SAW CUT CONTROL JOINTS MINIMUM ¼ OF THE SLAB DEPTH, AS SOON AFTER SLAB FINISHING AS POSSIBLE WITHOUT DISLODGING AGGREGATE. (DO NOT SAW CUT STRUCTURAL SLABS w/o APPROVAL).
8. BATCH TICKETS SHALL BE SUBMITTED TO A CONTRACTORS REPRESENTATIVE PRIOR TO OFF LOADING. ANY CONCRETE MORE THAN 45 MINUTES OUT PRIOR TO STARTING PLACEMENT SHALL BE REJECTED.
9. THE MAXIMUM ADDITION OF WATER SHALL BE LIMITED TO 1 GALLON PER YARD; NOTE THAT THIS ADDITION SHALL BE USED TO CONTROL HEAT ONLY (NOT SLUMP).
10. PUMPS SHALL NOT BE PRIMED IN FORMS.
11. REINFORCEMENT:
   A) ALL REINFORCING BARS SHALL BE A615, GR40 MIN. LAP SPLICES 18" MIN FOR #4 BAR, SEE TABLE
   B) WELDED WIRE FABRIC SHALL BE ASTM A185, LAP AT LEAST ONE FULL MESH AND LACE SPLICES WITH WIRE.
   C) REBAR SHALL BE CLEAN, AND FREE FROM RUST AND OIL PRIOR TO THE PLACEMENT OF CONCRETE. REBAR SHALL BE TIED AND SECURED AS REQUIRED TO PREVENT DISPLACEMENT IN THE FORMS.
   D) TIE STEEL TO PREVENT DISPLACEMENT. HOOK AND TIE STEEL AS POSSIBLE. TIES, CHAIRS, OR OTHER PRODUCTS SHALL BE PROTECTED WHEN LOCATED NEAR EXPOSED SURFACES.
   E) STEEL SHALL BE STORED ON SITE ABOVE GRADE, AND COVERED AS REQUIRED FOR PROTECTION FROM RAIN AND OTHER POSSIBLE DAMAGE.
12. ADJUST FOUNDATION FOR SITE AND SOIL CONDITIONS AND VERIFY WITH EOR

DIVISION 4 — MASONRY

1. COMPRESSIVE STRENGTH OF CONCRETE MASONRY CONSTRUCTION (CMU) SHALL BE AS FOLLOWS (PSI). MASONRY STRENGTH NOT SPECIFICALLY NOTED ON PLAN SHALL BE (f'm) 1500 PSI.

   MASONRY STRENGTH (F'm DESIGN)_____1500
   BLOCK STRENGTH_____1900
   MORTAR STRENGTH_____1800
   GROUT STRENGTH_____2000
2. CONCRETE BLOCK SHALL BE HOLLOW LOAD-BEARING CONCRETE MASONRY UNITS CONFORMING TO ASTM C 90, TYPE N-II. ALL BLOCKS SHALL BE PLACED RUNNING BOND CONSTRUCTION (UNLESS OTHERWISE NOTED) WITH ALL VERTICAL CELLS IN ALIGNMENT.
3. MORTAR MIX SHALL CONFORM TO THE REQUIREMENTS OF ASTM C 270, TYPE M OR S. TYPE M MORTAR SHALL BE USED WHERE MASONRY IS IN CONTACT WITH SOIL.
4. GROUT SHALL CONFORM TO THE REQUIREMENTS OF ASTM C 476. USE SUFFICIENT WATER FOR GROUT TO FLOW INTO ALL JOINTS OF THE MASONRY WITHOUT SEGREGATION. ALL CELLS IN CONCRETE BLOCKS CONTAINING REINFORCING SHALL BE FILLED SOLID WITH GROUT. ALL MASONRY BELOW FINISHED FLOOR OR GRADE SHALL BE GROUTED SOLID. HOLD GROUT DOWN 1-½" BELOW TOP OF BLOCK AT GROUT LIFT JOINTS AND AT CONCRETE PLACED OVER MASONRY.
5. MINIMUM LINTEL WHERE NOT ON PLANS, SHALL HAVE A MINIMUM OF 2 — #5's CONTINOUS HORIZONTAL BARS IN BOTTOM OF BOND BEAM OR LINTEL BLOCK AND SHALL BE GROUTED SOLID TO A MIN. DEPTH OF 24." ALL LINTEL REINFORCING AND GROUT SHALL EXTEND 2' MINIMUM PAST JAMBS UNLESS NOTED OTHERWISE ON PLANS OR DETAILS.
6. LAP REINFORCING 48 BAR DIAMETERS. STAGGER LAP SPLICES A MINIMUM OF ONE LAP LENGTH.
7. MASONRY VENEER SHALL BE ATTACHED TO SUPPORT WALL FRAMING WITH ⅛" DIAMETER WALL TIES OR DOVETAIL-TYPE METAL TIES OF EQUIVALENT STIFFNESS EMBEDDED INTO HORIZONTAL MORTAR JOINTS. MAXIMUM VERTICAL SPACING OF TIES SHALL BE 16." MAXIMUM HORIZONTAL SPACING SHALL BE 24." TIES IN ALTERNATE COURSES SHALL BE STAGGERED. PROVIDE #9 WIRE REINFORCING IN HORIZONTAL MORTAR JOINTS AT 16" OC. ENGAGE #9 WIRE WITH WALL ANCHOR TIES. CONSTRUCTION JOINTS IN MASONRY VENEER WALLS SHALL BE LOCATED PER THE DRAWINGS.
8. WATERPROOFING, DRAINAGE PLANE, AND INSTALLATION PER ADOPTED BUILDING CODE.

DIVISION 5.5 — MISC. STRUCTURAL STEEL

1. ALL MISCELLANEOUS STRUCTURAL STEEL WORK SHALL CONFORM TO THE REQUIREMENTS OF AISC "SPECIFICATIONS FOR DESIGN, FABRICATION, AND ERECTION OF STRUCTURAL STEEL FOR BUILDINGS".
2. MISCELLANEOUS STRUCTURAL STEEL MATERIAL SHALL COMPLY WITH:
   A) STRUCTURAL STEEL — ASTM A992
   B) STEEL PIPE COLUMNS — ASTM A53 GRADE B(Sch 40 TYP)
   C) ANCHOR BOLTS — ASTM A307 GRADE A, NON-HEADED TYPE UNLESS OTHERWISE NOTED.
3. FLITCH PLATES SHALL HAVE ½" DIA. BOLTS @ 16" OC, STAGGERED TOP AND BOTTOM BETWEEN JOIST LAYOUT.

RETURN WALLS

WALL HT. ABOVE FLOOR	RETURN SPACING (HOLD DOWN 24" BELOW GRADE)
LESS THAN 4'	RETURN WALLS NOT REQ'D
>4' TO 9'	16'-4" ON CENTER (MAX.), AND WITHIN 8' OF STEP DOWN OR AS SHOWN

* RETURN WALLS ALLOW FOR BACKFILL w/o FLOOR DECK IN PLACE FOR 60 PCF EQUIVALENT FLUID WEIGHT SOIL. NO HEAVY EQUIPMENT OR SURCHARE LOADING.

DIVISION 6 — ROUGH CARPENTRY

1. ALL ROUGH CARPENTRY WORK SHALL CONFORM TO THE REQUIREMENTS OF NFPA "NATIONAL DESIGN SPECIFICATION OF WOOD CONSTRUCTION", TPI "DESIGN SPECIFICATIONS FOR LIGHT METAL PLATE CONNECTED WOOD TRUSSES", APA "PLYWOOD DESIGN SPECIFICATIONS", DOC PS 1 "PRODUCT STANDARD FOR CONSTRUCTION AND INDUSTRIAL PLYWOOD", DOC PS 56 "STRUCTURAL GLUED LAMINATED TIMBER", AND APPLICABLE SECTIONS OF THE INTERNATIONAL BUILDING CODE.
2. ROUGH CARPENTRY MATERIALS SHALL COMPLY WITH:
   A) LUMBER — S4S, S-DRY, KD, OR S-GRN GRADE MARKED, COMPLYING WITH PS 20, GRADED UNDER WWPA OR SPIB RULES:
      STUDS: STUD GRADE
      HEADER: #2 DOUGLAS FIR MIN TYPICAL
      RAFTER: #2 DOUGLAS FIR
      PLATES: #2 DOUGLAS FIR
      BLOCKING: #2 DOUGLAS FIR
   B) METAL FRAMING FASTENERS — ASTM A 153, HOT-DIP GALVANIZED FASTENERS; EQUAL TO SIMPSON STRONG-TIE CONNECTORS COMPLYING WITH APPLICABLE ICC-ES REPORTS.
   C) PLYWOOD — APA RATED SHEATHING, COMPLYING TO PS 1.
   D) LVL — LAMINATED VENEER LUMBER SHALL BE GRADE 2800 F-2.0E AND SHALL MEET THE REQUIREMENTS OF APPLICABLE ICC-ES REPORTS.
   E) GLULAM BEAMS — COMBINATION 24F-V3 IN ACCORDANCE WITH AITC A190.1
3. EXTERIOR WALL AND ROOF SHEATHING SHALL BE ⅞" APA RATED SHEATHING 24/0 EXTERIOR GLUED (MIN) FOR 16" OC STUD SPACING. NAIL SHEATHING TO SUPPORT MEMBERS WITH 8D COMMON NAILS AT 6" ON CENTER ALONG EDGE SUPPORTS AND 12" ON CENTER ALONG FIELD SUPPORTS UNLESS NOTED OTHERWIDE. PROVIDE SOLID BLOCKING AT ALL UNSUPORTED PANEL EDGES; 4/8 GUN NAILS.

   NOTE: ROOF SHEATHING SHALL BE ⅞" APA RATED SHEATHING FOR TILE ROOF, OR AS REQUIRED BY MANUFACTURER.
4. INTERIOR SHEAR WALL SHEATHING WHERE NOTED SHALL BE ⅞" APA RATED SHEATHING 24/0 EXTERIOR GLUED (MIN) FOR 16" OC STUD SPACING. NAIL SHEATHING TO SUPPORT MEMBERS WITH 8D COMMON NAILS AT 4" ON CENTER ALONG EDGE SUPPORTS AND 6" ON CENTER ALONG FIELD SUPPORTS UNLESS NOTED OTHERWISE. PROVIDE SOLID BLOCKING AT ALL UNSUPORTED PANEL EDGES.
5. ATTACH METAL FRAMING FASTENERS TO FRAMING MEMBERS WITH MINIMUM NUMBER AND SIZE OF NAILS LISTED IN THE APPLICABLE ICC-ES REPORTS.
6. WOOD TRUSS SYSTEM; TRUSS JOIST SYSTEM AND GLULAM SYSTEM FOR ROOFS:
   A) DESIGN, FABRICATE, AND ERECT IN ACCORDANCE WITH BCSI STANDARDS AND NDS SPECIFICATIONS.
   B) DESIGN LOADS:
      25 PSF SNOW LIVE LOAD
      10 PSF DEAD LOAD TOP CHORD (20 TILE)
      10 PSF DEAD LOAD BOTTOM CHORD
   C) SUBMIT SHOP DRAWINGS, INCLUDING DESIGN CALCULATIONS, MATERIAL STRESSES, GRADE AND SPECIES OF WOOD, AND PLACEMENT DRAWING.
7. DEFAULT HEADER SIZE NOT SPECIFIED SPANNING 8'-0" MAX SHALL BE 2 — 2 X 10 #2, WITH 2 STUD SUPPORT.
8. ALL HEADERS OVER 4'-0" SHALL HAVE DOUBLE TRIMMER @ EACH SUPPORT, OR AS SPECIFIED, UNO.
9. SOLID BLOCKING BETWEEN JOISTS @ 36" OC FOR JOISTS PARALLEL TO THE EXTERIOR FOUNDATION WALL, MIN. 48" OR 3 JOIST SPACES.
10. ALL FLUSH FRAMING @ HEADERS OR GIRDERS SHALL BE HANGERED.
11. BLOCK BETWEEN JOISTS @ SUPPORTS OR OVER BEAMS.
12. RATED CONSTRUCTION FOR PROJECTIONS INTO SETBACKS AS REQ'D.
13. DOUBLE JOIST BELOW PARALLEL NONBEARING WALLS ON LAYOUT, SINGLE JOIST OFF LAYOUT. STRUCTURE BELOW LOAD-BEARING WALLS AS NOTED ON PLANS.

FOUNDATION PER JOCOBO RESIDENTIAL FOUNDATION GUIDELINE

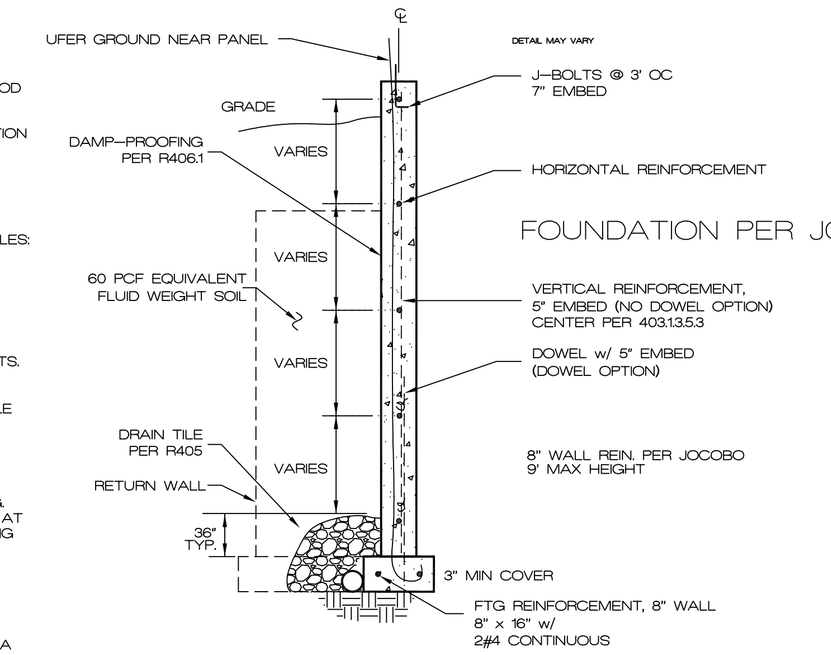

NTS 7 / D1 WALL REINFORCEMENT

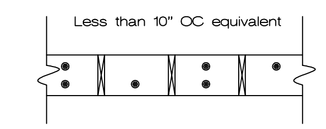

NTS 8a / D1 DECK LEDGER

18' max Joist Span

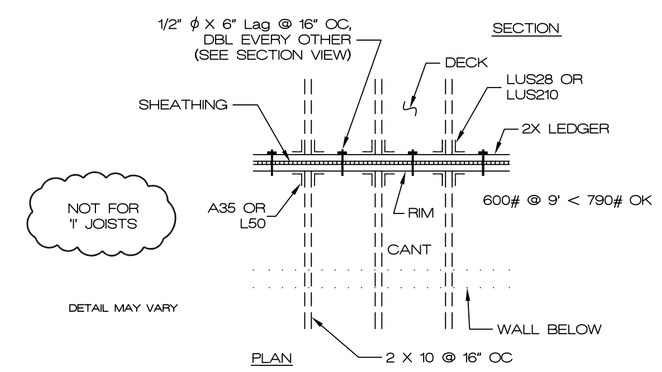

NTS 8b / D1 DECK @ CANTILEVER

STRUCT. SLAB MODULE SPACING

SLAB TYPE	MODULE SPACING
BASEMENT	15'-6"
GARAGE	12'-6"

(MODULE ALSO APPLIES @ OVERDIG)

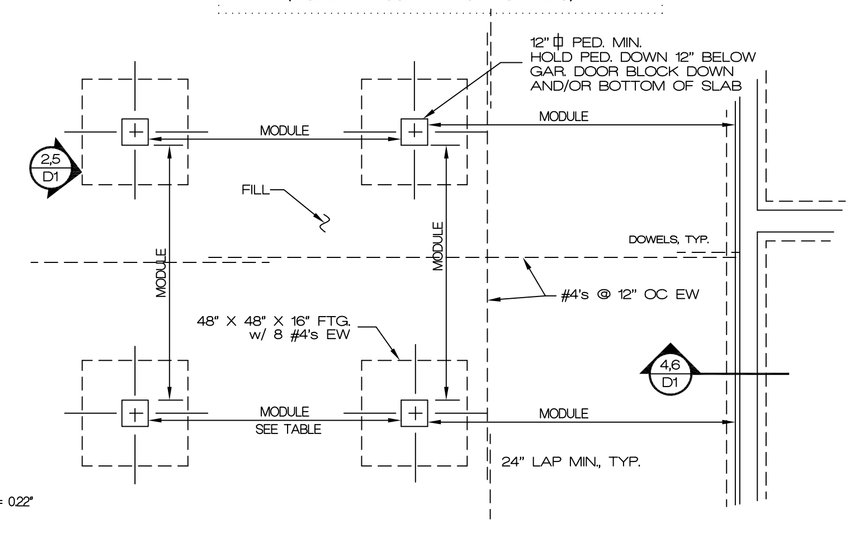

NTS 9 / D1 STRUCTURAL SLAB ON FILL

DO NOT SAW CUT STRUCTURAL SLABS w/o APPROVAL
VERIFY ALL STRUCTURAL SLAB DETAILS w/ ENGINEER
DO NOT ISOLATE COLUMNS FROM STRUCTURAL SLABS

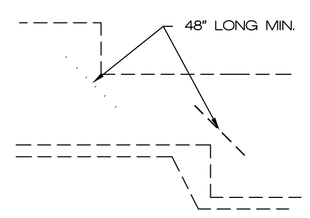

NTS 3 / D1 DIAGONAL STEEL

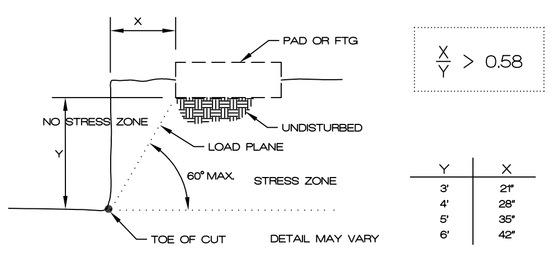

$\frac{X}{Y} > 0.58$

Y	X
3'	21"
4'	28"
5'	35"
6'	42"

NTS 1 / D1 FOOTING

FOOTING STRESS ZONE

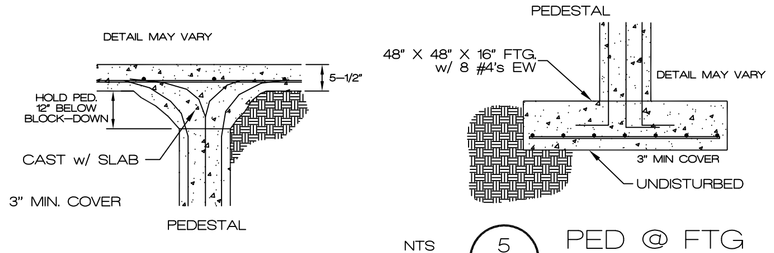

NTS 2 / D1 SLAB @ PED

SLAB ON FILL

NTS 5 / D1 PED @ FTG

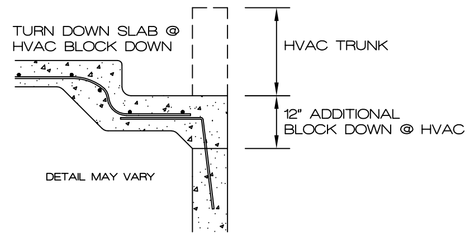

NTS 11 / D1 SLAB @ HVAC

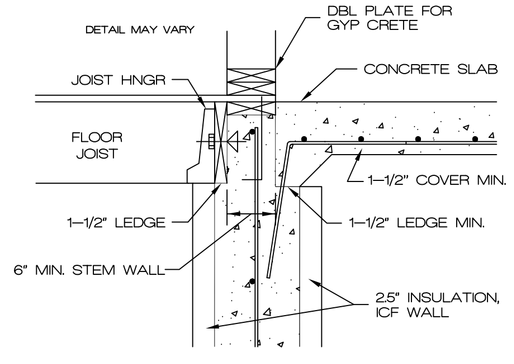

NTS 4 / D1 FLUSH FRAMING @ FDN

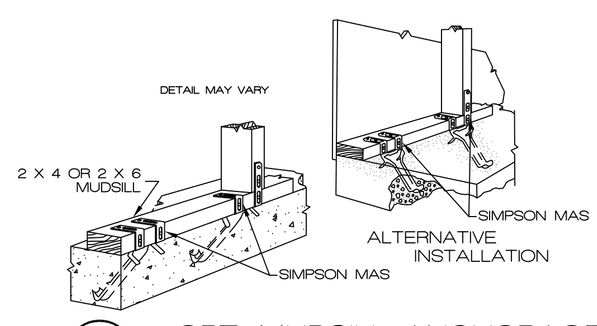

NTS 10 / D1 OPT. MUDSILL ANCHORAGE

ALTERNATIVE TO J-BOLTS

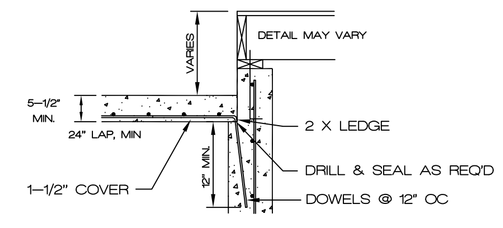

NTS 6 / D1 SLAB @ WALL

SLAB ON FILL
CONCRETE OR CMU

WALL REINFORCING

	8" THICK			10" THICK		
	8'	9'		8'	9'	10'
3000, GR40	16	12		24	16	12
3500, GR40	16	12		24	24	12
3000, GR60	24	16		24	20	16
3500,GR60	24	16		24	24	16
HOR. REIN. MIN. GR40 #4						
One bar 12" from top & 24" oc max	4 #4	5 #4		4 #4	5 #4	6 #4

CONC STRENGTH

	REQ'D STRENGTH
FTG	3,000 psi
WALL	3,500 psi
SLAB	3,500 psi
SUS-SLAB	7 SACK MIX

GARAGE SLAB:

100 # /ϕ' (LL)
67 # /ϕ' (DL)
w_u = 12(DL) + 16(LL)
= 240 # / ϕ' (TL)

$M_{max} = \frac{w_u * L^2}{14} \rightarrow 27{,}206$ #-in

$a = \frac{A_s * f_y}{0.85 * f'_c * b} \rightarrow \frac{40{,}000 * 0.2}{0.85 * 3{,}500 * 12} = 0.22''$

$\phi M_N = \phi A_s * f_y (d - a/2)$
= 0.9(0.2)(40000)(4-0.22/2)
= 28,008 #-in > 27,206 (OKAY)

∴ Use #4 @ 12" OC EW
12'-6" (+/-) MODULE

BASEMENT SLAB:

40 # /ϕ' (LL)
67 # /ϕ' (DL)
w = 12(DL) + 16(LL)
= 144 # / ϕ' (TL)

$M_{max} = \frac{w_u * L^2}{14} \rightarrow 25{,}951$ #-in

$a = \frac{A_s * f_y}{0.85 * f'_c * b} \rightarrow \frac{40{,}000 * 0.2}{0.85 * 3{,}500 * 12} = 0.22''$

$\phi M_N = \phi A_s * f_y (d - a/2)$
= 0.9(0.2)(40000)(4-0.22/2)
= 28,008 #-in > 25,951 (OKAY)

∴ Use #4 @ 12" OC EW
15'-6" (+/-) MODULE

Ken Sidorowicz, PC
P.O. Box 12089, Parkville, Missouri 64152
Tel. (816) 741-0852 Fax (816) 741-0858

©

ISSUE DATE	
REVISIONS	11/2/15

2018 DETAIL SHEET

STATE OF MISSOURI — KENNETH SIDOROWICZ — NUMBER E-19986 — PROFESSIONAL ENGINEER
2/14/21

D1

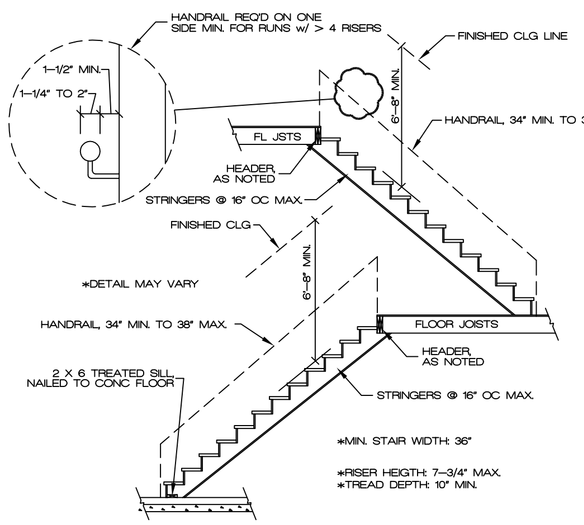

NTS 1 D2 STAIR SECTION

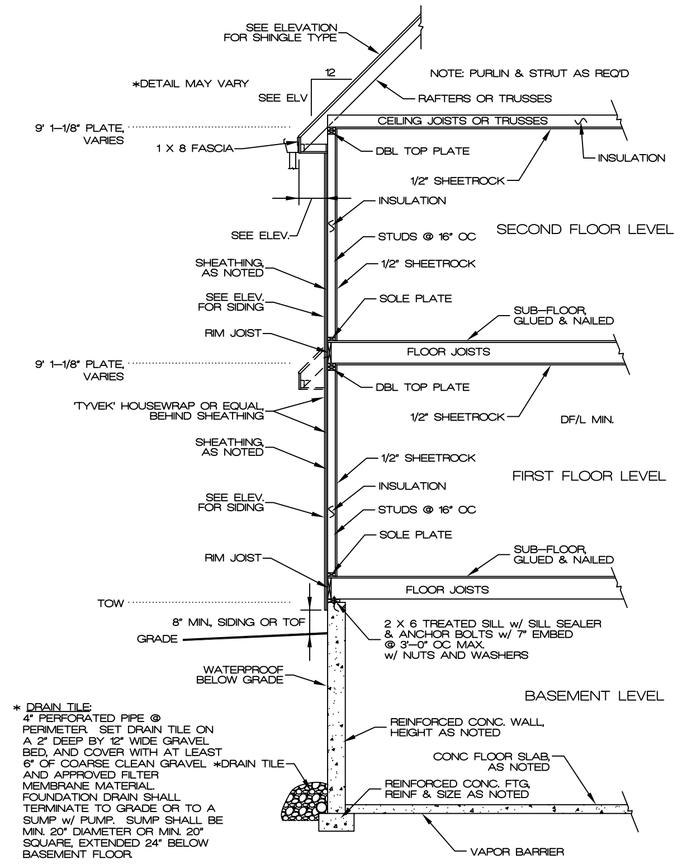

NTS 2 D2 EXTERIOR WALL SECTION

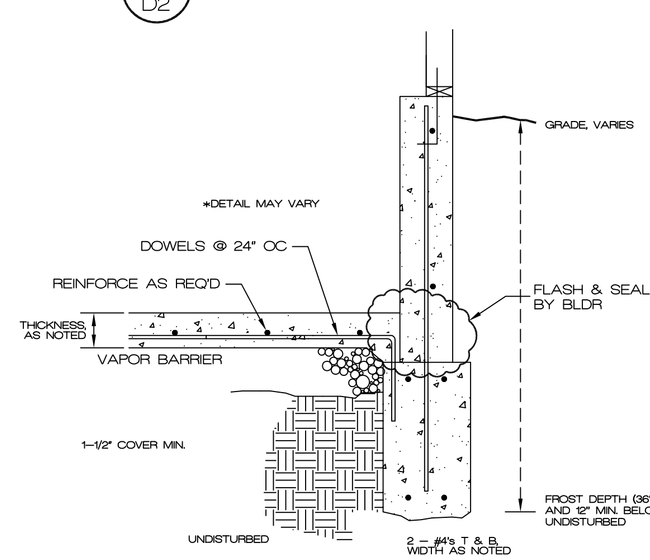

NTS 6 D2 SLAB @ FROST TRENCH
w/ STEM WALL (< 4')

GENERAL NOTES

1. GLASS – GLAZING IN THE FOLLOWING LOCATIONS SHALL BE OF APPROVED SAFETY GLAZING MATERIALS: STORM DOORS, PANELS ADJACENT TO A DOOR WHERE THE NEAREST VERTICAL EDGE IS WITHIN A 24" ARC OF THE DOOR IN A CLOSED POSITION AND WHOSE BOTTOM EDGE IS WITHIN 60" OF THE FLOOR, WALLS ENCLOSING STAIRWAYS AND LANDINGS WHERE THE GLASS IS WITHIN 60" OF THE TOP OR BOTTOM OF THE STAIR, ENCLOSURES FOR SPAS, TUBS SHOWERS, AND GLASS EXCEEDING 9 SF. AND WHOSE BOTTOM EDGE IS LESS THAN 18" A.F.F. OR WALKING SURFACE WITHIN 36". A MINIMUM OF ONE EGRESS WINDOW SHALL BE PROVIDED IN EACH BEDROOM AND ONE FROM THE BASEMENT WITH A MINIMUM OPERABLE AREA OF 5.7 SF. MINIMUM HEIGHT OF 24 INCHES AND MINIMUM WIDTH OF 20 INCHES. THE OPERABLE PORTION SHALL NOT EXCEED 44 INCHES A.F.F. WATER RESISTANT WINDOW WELLS AS REQ'D.
2. SMOKE DETECTORS – PROVIDE SMOKE ALARMS IN EACH SLEEPING ROOM, OUTSIDE OF EACH SLEEPING AREA AND ON EACH FLOOR AT THE STAIRS, INCLUDING BASEMENTS. ALARMS SHALL BE INTERCONNECTED SO THE ACTUATION OF ONE ALARM WILL ACTIVATE ALL THE SMOKE DETECTORS IN THE DWELLING.

*CARBON MONOXIDE DETECTORS REQ'D OUTSIDE EACH SLEEPING AREA IN DWELLING UNITS WITH FUEL–FIRED APPLIANCES AND/OR ATTACHED GARAGES, AND IN APPLIANCE AREAS

3. INSULATION REQUIREMENTS: HERS COMPLIANCE REPORT OR COMPLY WITH 2018 IRC PRESCRIPTIVE REQUIREMENTS
4. ATTIC VENTILATION: THE NET FREE VENTILATION AREA SHALL BE NOT LESS THAN 1/150 OF THE AREA OF THE SPACE BEING VENTILATED. THE NET VENTILATION AREA MAY BE REDUCED TO 1/300 IF 50% TO 80% OF THE REQUIRED VENTILATION AREA IS PROVIDED BY VENTILATOR LOCATED IN THE UPPER PORTION OF THE SPACE TO BE VENTILATED, AT LEAST 3 FT. ABOVE EAVES OR CORNICE VENTS. RAFTERS SPACES ENCLOSED BY CEILING DIRECTLY APPLIED TO UNDERSIDE OF RAFTERS SHALL BE SIZED TO ALLOW A MINIMUM OF 1 INCH CLEAR VENTED AIR SPACE ABOVE THE INSULATION. ATTICS WITH A MAXIMUM VERTICAL CLEAR HEIGHT OF LESS THAN 30 INCHES ARE NOT REQ'D TO HAVE ACCESS OPENING.

THIS REQUIREMENT IS WAIVED FOR A COCOON SYSTEM MAKE–UP AIR REQ'D

5. MAKE–UP/COMBUSTION AIR: MAKE–UP OR COMBUSTION AIR SHALL BE PROVIDED FROM OUTSIDE AS REQ'D FOR KIT. EXHAUST OVER 400 cfm, FURNACE OR WH THRU ROOF OR OUTSIDE WALL.
6. HVAC IGNITION SOURCE: EQUIPMENT AND APPLIANCES WITH AN IGNITION SOURCE THAT ARE LOCATED IN THE GARAGE OR GARAGE CLOSET SHALL BE ELEVATED SUCH THAT THE SOURCE OF IGNITION IS NOT LESS THAN 18" ABOVE THE FLOOR OR ARE LISTED AS FLAMMABLE VAPOR RESISTANT AND FOR INSTALLATION WITHOUT ELEVATION.
7. EXHAUST AIR: ALL EXHAUST FANS SHALL EXHAUST DIRECTLY TO THE BUILDING EXTERIOR.
8. GARAGE FLOOR SLOPE: GARAGE FLOORS SHALL SLOPE 299 MIN. TO THE GARAGE DOORS, AN OPEN TRENCH, OR AN UNTRAPPED DRAIN THAT DISCHARGES DIRECTLY TO THE TO THE EXTERIOR GRADE.
9. FINISHED GRADE: THE FINISHED GRADE OF THE YARD SHALL SLOPE 6" MIN. WITHIN THE FIRST 10 FEET, THEN 2% MIN. IN ALL OTHER AREAS.
10. WINDOWS: WINDOW FLASHING AND INSTALLATION MANUAL FROM MANUFACTURER SHALL BE ON SITE.
11. WATER HEATER: PROVIDE MEANS OF CONTROLLING PRESSURE CAUSED BY THERMAL EXPANSION IF THE WATER SERVICE IS PROTECTED BY A PRESSURE REGULATOR.

A WATER TEMPERATURE LIMITING DEVICE IS REQUIRED ON BATHTUBS AND JACUZZIS LIMITING THE TEMPERATURE TO 120° F.

12. SUMP: THE SUMP PIT SHALL BE EQUIPPED WITH A PUMP AND DEDICATED RECEPTACLE. IN UNFINISHED PORTIONS OF THE BASEMENT, RECEPTACLES SHALL HAVE GFI PROTECTION.
13. SHOWER/WET WALLS: USE CEMENT BOARD (INSTALLED PER MANU) BEHIND GLUED TILE. DO NOT USE GREEN BOARD. COVER ALL JOINTS WITH WATER RESISTANT SEALANT. FINISH TO EXTEND 72" ABOVE DRAIN.
13. GFCI'S: SHALL BE LOCATED IN THE GARAGE, AT ALL KITCHEN COUNTER RECEPTACLES, IN BATHROOMS, AT ALL OUTDOOR RECEPTACLES, AND THOSE WITHIN 6' OF SINKS. SPA AREAS: GFCI WITHIN 10' AND >5'; NO RECEPTACLE WITHIN 5', AND NO SWITCH WITHIN 5'. WITHIN 36" OF BATHROOM OR POWDER LAVATORY. PLUG–IN–PLANE COVERS AS REQ'D.
14. DRYWALL: GARAGES AND ENCLOSED SPACE BELOW STAIRS SHALL HAVE 5/8" TYPE X ON CEILING, BEAM, COLUMN, AND ON COMMON WALLS WITH LIVING SPACE.
15. APPLIANCES: SHALL BE DIRECT VENT. VENT TERMINALS SHALL BE LOCATED PER CODE, WITH THE BOTTOM OF VENT NOT LESS THAN 12" ABOVE FINISHED GRADE, UNO.

DRYER SHALL HAVE 4" DIAMETER EXHAUST DUCT TO EXTERIOR, WITH A MAXIMUM LENGTH OF 25 FEET.

ALL DUCT SYSTEMS SHALL BE AIR TIGHT.

16. FURNACE: SHALL HAVE 18" CLEARANCE ON CONTROL SIDE, AND 12" CLEARANCE ON ALL OTHER SIDES.
17. LAWN IRRIGATION: THE POTABLE WATER SUPPLY SHALL BE PROTECTED BY BACKFLOW PREVENTION. ALL OUTDOOR RECEPTACLES, AND WITHIN 6' OF ANY SINK, SPA AREAS: GFCI WITHIN 10' AND >5'; NO RECEPTACLE WITHIN 5', AND NO SWITCH WITHIN 5'.
18. PLUMBING FIXTURES: FIXTURES WITH A FLOOD LEVEL BELOW THE ELEVATION OF THE NEXT UPSTREAM PUBLIC SEWER MANHOLE COVERS SHALL BE PROTECTED WITH AN APPROVED BACKWATER VALVE (INCLUDING DRAINAGE DISCHARGE).

BASEMENT HOSE CONNECTIONS SHALL HAVE AN ANTI–SIPHON DEVICE INSTALLED.

ACCESS TO PUMPS UNDER WHIRLPOOL SHALL BE 18" X 18" MIN.

19. GAS PIPING: GAS PIPING SERVING A TOWNHOME SHALL NOT PASS THROUGH ADJACENT UNITS.
20. ELECTRICAL FIXTURES: FIXTURES IN DAMP AND WET LOCATIONS SHALL BE LISTED AS SUITABLE FOR THAT LOCATION.

RECEPTACLE OUTLETS SHALL BE SPACED 6' MAX. (MEASURED HORIZONTALLY ALONG FLOOR LINE) AND IN ANY WALL SPACE 2' WIDE OR GREATER.

21. AFCI: ALL RECEPTACLE CIRCUITS EXCEPT GFCI SHALL BE AFCI PROTECTED.
22. BONDING: ALL METALLIC BOXES SHALL BE BONDED. PROVIDE BONDING TO ALL METAL PIPING, GAS, AND OTHER BUILDING SYSTEMS. PROVIDE BOND JUMPER ACROSS METALLIC HOT AND COLD WATER LINES AT THE WATER HEATER.
23. BRANCH CIRCUITS: BATHROOM RECEPTACLES SHALL BE SUPPLIED BY MINIMUM OF ONE 20–AMP BRANCH CIRCUIT, SUPPLYING NO OTHER OUTLETS. PROVIDE SEPARATE 20–AMP BRANCH CIRCUIT FOR LAUNDRY. PROVIDE MINIMUM OF TWO 20–AMP SMALL APPLIANCE BRANCH CIRCUITS FOR THE KITCHEN/DINING/BREAKFAST.
24. GUARD OPENINGS: OPENINGS IN REQ'D GUARDS SHALL NOT PERMIT THE PASSAGE OF A 4" SPHERE FROM THE WALKING SURFACE TO THE REQ'D GUARD HEIGHT.
25. WINDOW SILLS: IN DWELLING UNITS, WHERE THE OPENING OF AN OPERABLE WINDOW IS LOCATED MORE THAN 72 INCHES ABOVE FINISHED GRADE OR SURFACE BELOW, THE LOWEST PART OF THE CLEAR OPENING OF THE WINDOW SHALL BE A MIN. OF 24 INCHES A.F.F. OF THE ROOM IN WHICH THE WINDOW IS LOCATED. GLAZING BETWEEN THE FLOOR AND 24 INCHES SHALL BE FIXED OR HAVE OPENINGS THROUGH WHICH A 4 INCH DIA. SPHERE CANNOT PASS.

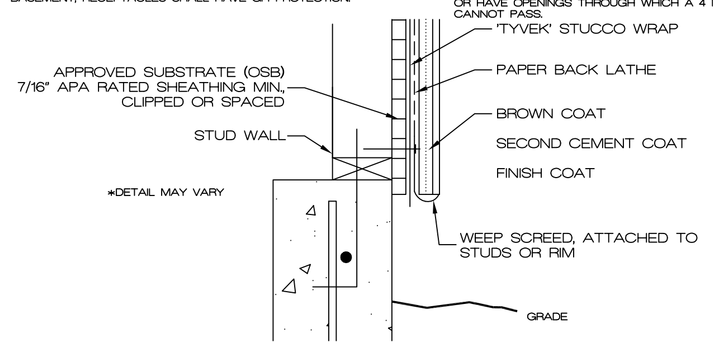

NTS 16 D2 3 COAT STUCCO DETAIL
144 FT² MAX. MODULE FOR CONTROL JOINT GRID

LOAD TABLE

LOCATION	MIN. DL (PSF)	MIN. LL (PSF)	
DECKS & BALCONIES	10	40	
CEILING w/o STORAGE	10	10	
CEILING w/ LIMITED ACCESS STORAGE	10	20	
NON-SLEEPING ROOMS	10	40	
SLEEPING ROOMS	10	30	
ATTICS SERVED BY MAN DOOR	10	40	
ROOF-LIGHT COVERING	10	20	25 PREFERRED
ROOF-HEAVY COVERING	20	20	25 PREFERRED

COMP RE-ROOFS OF SHAKE SHALL REMOVE SKIP SHEATING

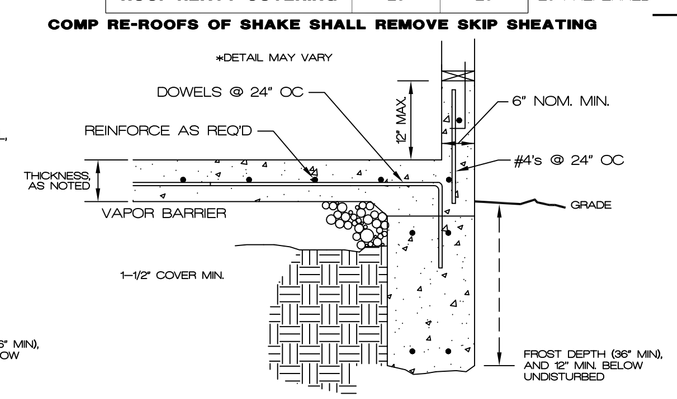

NTS 8 D2 6" NOM. CURB WALL
MONOLITHIC w/ SLAB

ENERGY EFFICIENCY NOTES

1. HERS COMPLIANCE PATH
2. THE BUILDING THERMAL ENVELOPE SHALL BE SEALED PER 2018 IRC SECTION N1102.4.1 AND TABLE N1102.4.11
3. DUCTS, AIR HANDLERS, FILTER BOXES AND BUILDING CAVITIES USED AS DUCTS SHALL BE SEALED PER 2018 IRC SECTION N1103.3.2

INSULATION VALUES :

CEILING	R49
CATHEDRAL VAULT	R30
EXTERIOR WALLS	2X4 R15 2X6 R19
U–VALUES .32 OR LOWER	SHGC VALUES .35 OR LOWER
FLOOR OVER OUTSIDE AIR OR GARAGE	R30
UNFINISHED BSMT WALLS	NONE
FINISHED BSMT WALLS	R13 AGAINST FDN
DUCTS OUTSIDE OF COND. SPACE	R8

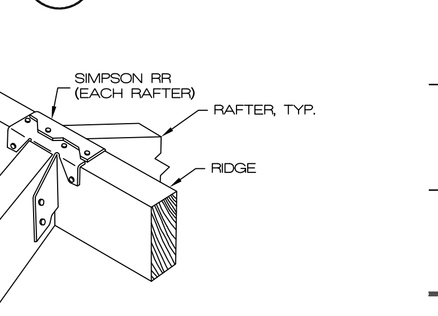

NTS 19 D2 ROOF FRAMING @ VAULT
VAULT w/ PITCH

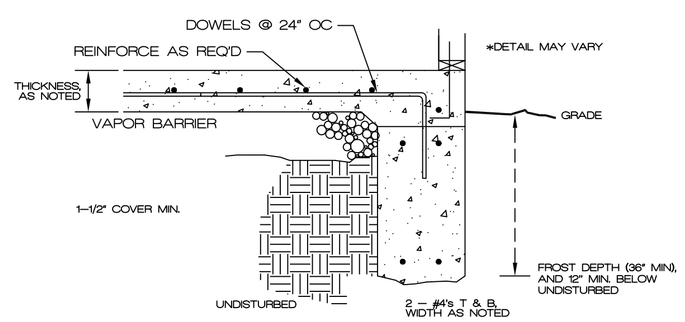

NTS 9 D2 SLAB @ TRENCH FTG.

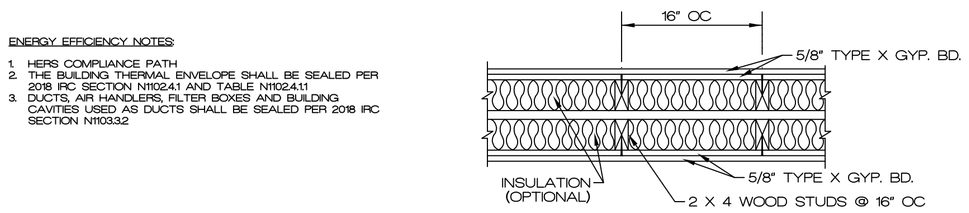

BASE LAYER 5/8" TYPE X GYPSUM WALLBOARD OR GYPSUM VENEER BASE APPLIED AT RIGHT ANGLES TO EACH SIDE OF DOUBLE ROW OF 2 X 4 WOOD STUDS 16" OC ON SEPERATE PLATES 1" APART WITH 6d COATED NAILS, 1–3/4" LONG, 0.085" SHANK, 1/4" HEADS, 24" OC. FACE LAYER 5/8" TYPE X GYPSUM WALLBOARD OR GYPSUM VENEER BASE APPLIED AT RIGHT ANGLES TO EACH SIDE WITH 8d COATED NAILS, 2–3/8" LONG, 0.100" SHANK, 1/4" HEADS, 8" OC.

JOINTS STAGGERED 16" EACH LAYER AND SIDE. HORIZONTAL BRACING REQUIRED AT MID–HEIGTH (LOAD–BEARING).

NTS 12 D2 WP 3820
2 HOUR INT. PARTITION

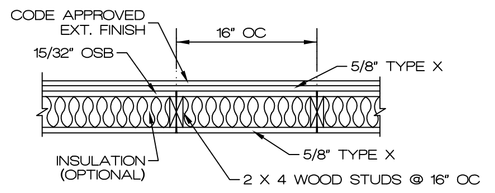

INTERIOR SIDE: ONE LAYER 5/8" TYPE X GYPSUM WALLBOARD, WATER–RESISTANT GYPSUM BACKING BOARD, OR GYPSUM VENEER BASE APPLIED PARALLEL OR AT RIGHT ANGLES TO STUDS 16" OC WITH 6d COATED NAILS, 1–3/4" LONG, 0.0915" SHANK, 1/4" HEADS, 7" OC. (LOAD–BEARING)

NTS 11 D2 U344

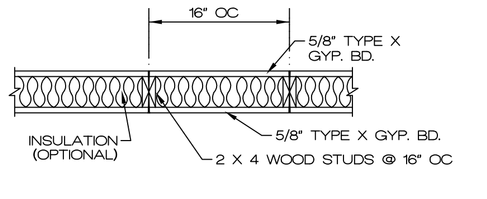

ONE LAYER 5/8" TYPE X PLAIN OR PREDECORATED GYPSUM WALLBOARD, WATER–RESISTANT GYPSUM BACKING BOARD, OR GYPSUM VENEER BASE APPLIED PARALLEL OR AT RIGHT ANGLES TO EACH SIDE OF 2 X 4 WOOD STUDS 16" OC WITH 6d COATED NAILS, 1–3/4" LONG, 0.0915" SHANK, 1/4" HEADS, 7" OC. JOINTS OF SQUARE EDGE, BEVEL EDGE OR PREDECORATED WALLBOARD MAY BE LEFT EXPOSED.

JOINTS STAGGERED 16" ON OPPOSITE SIDES. (LOAD–BEARING)

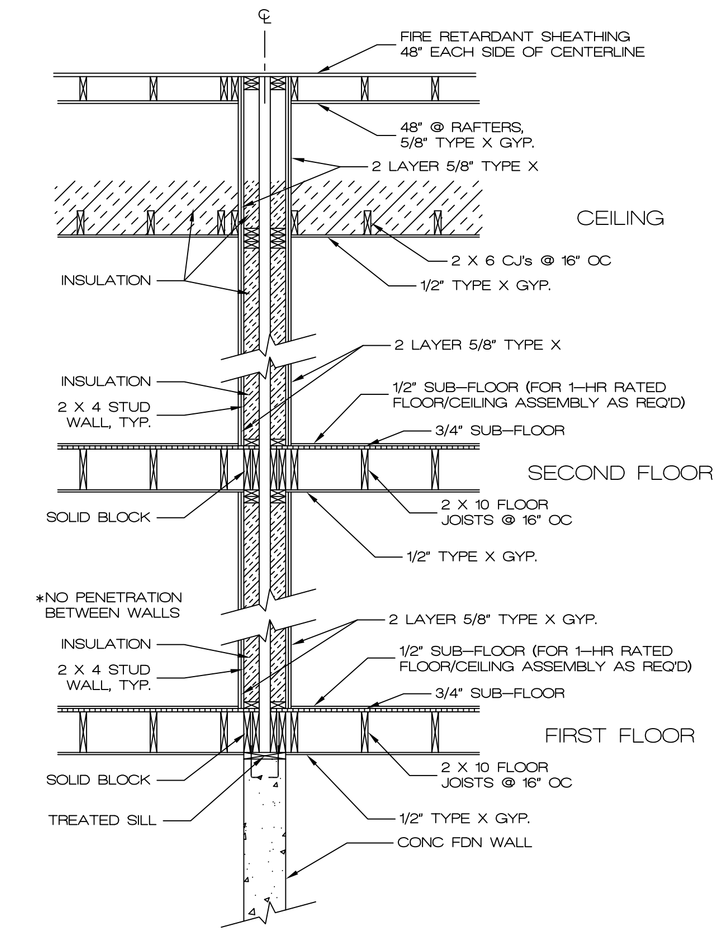

NTS 13 D2 SEPERATION FIREWALL/FLOOR SECTION
WP 3820 (Wall), FC 5517 or Equal (Floor/Ceiling)

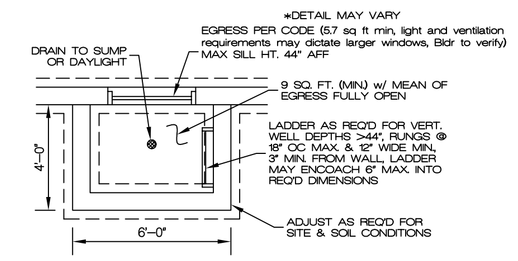

NTS 17 D2 EGRESS WELL
WATERTIGHT WELL, 36" MIN. VERTICAL CLEARANCE (PRE–FAB WELL OPT. AS APPROVED BY CITY)

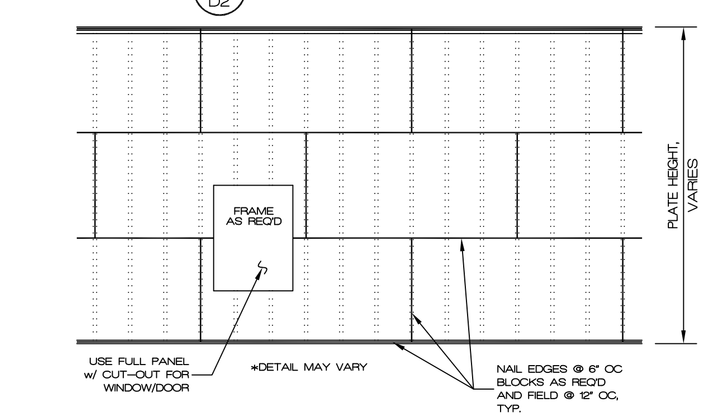

NTS 10 D2 U305 (WP 3605)

NTS 3 D2 SHEATHING PANEL LAYOUT
HORIZONTAL PANEL ORIENTATION

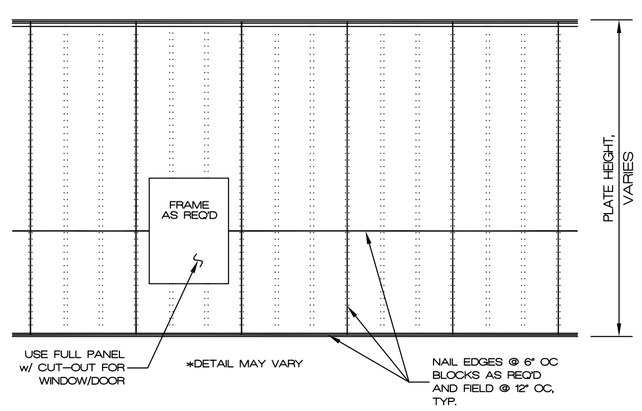

NTS 4 D2 SHEATHING PANEL LAYOUT
VERTICAL PANEL ORIENTATION

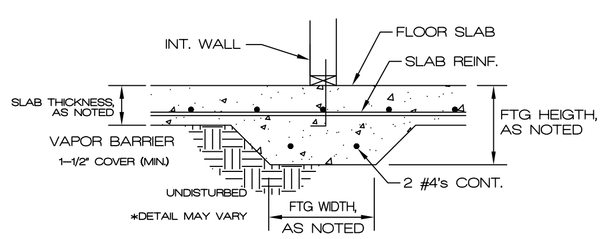

NTS 7 D2 THICKENED SLAB FTG
MONOLITHIC w/ SLAB

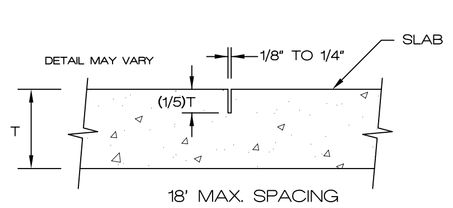

NTS 5 D2 SLAB CONTROL JOINT
DO NOT SAW CUT STRUCTURAL SLABS w/o APPROVAL

Ken Sidorowicz, PC
P.O. Box 12089, Parkville, Missouri 64152
Tel. (816) 741-0852 Fax (816) 741-0858

©

ISSUE DATE
REVISIONS

2018 DETAIL SHEET

STATE OF MISSOURI
KENNETH SIDOROWICZ
NUMBER E-19986
PROFESSIONAL ENGINEER
2/14/21

D2

STAPLES NOT PERMITTED IN KCMO

FASTENER SCHEDULE FOR STRUCTURAL MEMBERS

Item	Description of building elements	Number & type of fastener (notes: a, b, c)	Spacing of fasteners
Roof			
1	Blocking between joists or rafters to top plate, toe nail	3–8d (2–1/2" x 0.113")	–
2	Ceiling joists to plate, toe nail	3–8d (2–1/2" x 0.113")	–
3	Ceiling joists not attached to parallel rafter, laps over partitions, face nail	3–10d	–
4	Collar tie rafter, face nail or 1–1/4" x 20 ga. ridge strap	3–10d (3" x 0.128")	–
5	Rafter to plate, toe nail, note trusses use STC clips at NLB walls and specif'd holdowns	3–16d or 3–10d (3–1/2" x 0.135", 0.148")	2 toe nails side 1, 1 toe nail side 2 (note j)
6	Roof rafters to ridge, valley or hip rafters:		–
	Toe nail:	4–16d (3–1/2" x 0.135")	–
	Face nail:	3–16d (3–1/2" x 0.135")	–
Wall			
7	Built–up studs–face nail	10d (3" x 0.128")	24" o.c.
8	Abutting studs at intersecting wall corners, face nail	16d (3–1/2" x 0.135")	12" o.c.
9	Built–up header, two pieces w/ 1/2" spacer	16d (3–1/2" x 0.135")	16" o.c. along each edge
10	Continued header, two pieces	16d (3–1/2" x 0.135")	16" o.c. along each edge
11	Continuous header to stud, toe nail	4–8d (2–1/2" x 0.113")	–
12	Double studs, face nail	10d (3" x 0.128")	24" o.c.
13	Double top plates, face nail	10d (3" x 0.128")	24" o.c.
14	Double top plates, min. 48" offset of end joints, face nail in lapped area	8–16d (3–1/2" x 0.135")	–
15	Sole plate to joist or blocking, face nail	16d (3–1/2" x 0.135")	16" o.c.
16	Sole plate to joist or blocking at braced wall panels	3–16d (3–1/2" x 0.135")	16" o.c.
17	Stud to sole plate, toe nail	3–8d (2–1/2" x 0.113") or 2–16d (3–1/2" x 0.135")	–
18	Top or sole plate to stud, end nail	2–16d (3–1/2" x 0.135")	–
19	Top plates, laps at corners and intersections, face nail	2–10d (3" x 0.128")	–
20	1" brace to each stud and plate, face nail	2–8d (2–1/2" x 0.113") 2 staples 1–3/4"	–
21	1" x 6" sheathing to each bearing, face nail	2–8d (2–1/2" x 0.113") 2 staples 1–3/4"	–
22	1" x 8" sheathing to each bearing, face nail	2–8d (2–1/2" x 0.113") 3 staples 1–3/4"	–
23	Wider than 1" x 8" sheathing to each bearing, face nail	3–8d (2–1/2" x 0.113") 3 staples 1–3/4"	–
Floor			
24	Joist to sill or girder, toe nail	3–8d (2–1/2" x 0.113")	–
25	Rim joist to top plate, toe nail (roof applications also)	8d (2–1/2" x 0.113")	6" o.c.
26	Rim joist or blocking to sill plate, toe nail	8d (2–1/2" x 0.113")	6" o.c.
27	1" x 6" subfloor or less to each joist, face nail	2–8d (2–1/2" x 0.113") 2 staples 1–3/4"	–
28	2" subfloor to joist or girder, blind and face nail	2–16d (3–1/2" x 0.135")	–
29	2" planks (plank & beam – floor and roof)	2–16d (3–1/2" x 0.135")	@ each bearing
30	Built–up girders and beams, 2" lumber layers	10d (3" x 0.128")	Nail each layer as follows: 32" o.c. at top and bottom and staggered. Two nails at ends and at each splice
31	Ledger strip supporting joists or rafters	3–16d (3–1/2" x 0.135")	@ each joist or rafter

	Description of building materials	Description of fastener (notes: b, c, e)	Spacing of Fasteners: Edges (inches) (note: j)	Spacing of Fasteners: Intermediate supports (inches) (notes: c, e)
Wood structural panels, subfloor, roof and interior wall sheathing to framing and particleboard wall sheathing to framing				
32	3/8" to 1/2"	6d common (2" x 0.113") nail (subfloor, wall) (note j) 8d common (2–1/2" x 0.131") nail (roof)	6	12 (note g)
33	19/32" to 1"	8d common nail (2–1/2" x 0.131")	6	12 (note g)
34	1–1/8" to 1–1/4"	10d common (3" x 0.148") nail or 8d deformed (2–1/2" x 0.131") nail	6	12
Other wall sheathing (note h)				
35	1/2" structural cellulosic fiberboard sheathing	1–1/2" galv. roofing nail, 7/16" crown or 1" crown staple 16 ga., 1–1/4" long	3	6
36	25/32" structural cellulosic fiberboard sheathing	1–3/4" galv. roofing nail, 7/16" crown or 1" crown staple 16 ga., 1–1/2" long	3	6
37	1/2" gypsum sheathing (note d)	1–1/2" galvanized roofing nail; staple galv., 1–1/2" long; 1–1/4" screws, Type W or S	7	7
38	5/8" gypsum sheathing (note d)	1–3/4" galvanized roofing nail; staple galv., 1–5/8" long; 1–5/8" screws, Type W or S	7	7
Wood structural panels, combination subfloor underlayment to framing				
39	3/4" and less	6d deformed (2" x 0.120") nail or 8d common (2–1/2" x 0.131") nail	6	12
40	7/8" to 1"	8d common (2–1/2" x 0.131") nail or 8d deformed (2–1/2" x 0.120") nail	6	12
41	1–1/8" to 1–1/4"	10d common (3" x 0.148") nail or 8d deformed (2–1/2" x 0.120") nail	6	12

For SI: 1 inch = 254 mm, 1 foot = 304.8 mm, 1 mile per hour = 0.447 m/s, 1 ksi = 6895 MPa

a. All nails are smooth–common, box or deformed shanks except where otherwise stated. Nails used for framing and sheathing connections shall have minimum average bending yield strengths as shown: 80 ksi (551 MPa) for shank diameter of 0.192 inch (5NI common nail), 90 ksi (620 MPa) for shank diameters larger than 0.142 inch but not larger than 0.177 inch, and 100 ksi (689 MPa)for shank diameters of 0.142 inch or less.
b. Staples are 16 gage wire and have a minimum 7/16–inch on diameter crown width.
c. Nails shall be spaced at not more than 6 inches on center at all supports where spans are 48 inches or greater.
d. Four–foot–by–8–foot or 4–foot–by–9–foot panels shall be applied vertically.
e. Spacing of fasteners not included in this table shall be verified w/ EOR.
f. For regions having basic wind speed of 110 mph or greater, 8d deformed nails shall be used for attaching plywood and wood structural panel roof sheathing to framing within minimum 48–inch distance from gable end walls, if mean roof height is more than 25 feet, up to 35 feet maximum.
g. For regions having basic wind speed of 100 mph or less, nails for attaching wood structural panel roof sheathing to gable endwall framing shall be spaced; 6 inches on center. When basic wind speed is greater than 100 mph, nails for attaching panel roof sheathing to intermediate supports shall be spaced 6 inches on center for minimum 48–inch distance from ridges, eaves and gable end walls; and 4 inches on center to gable end wall framing.
h. Gypsum sheathing shall conform to ASTMC 1396 and shall be installed in accordance with GA 253. Fiberboard sheathing shall conform to ASTM C 208.
i. Spacing of fasteners on floor sheathing panel edges applies to panel edges supported by framing members and at all floor perimeters only. Spacing of fasteners on roof sheathing panel edges applies to panel edges supported by framing members and at all roof plane perimeters. Blocking of roof or floor sheathing panel edges perpendicular to the framing members shall not be required except at intersection of adjacent roof planes. Floor and roof perimeter shall be supported by framing members or solid blocking.
j. Where a rafter is fastened to an adjacent parallel ceiling joist in accordance with this schedule, provide two toe nails on one side of the rafter and toe nails from the ceiling joist to top plate in accordance with this schedule. The toe nail on the opposite side of the rafter shall not be required.

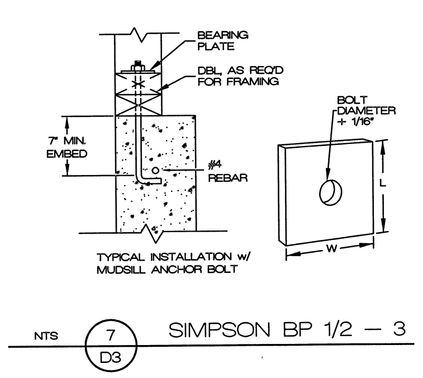

NTS (7/D3) SIMPSON BP 1/2 – 3

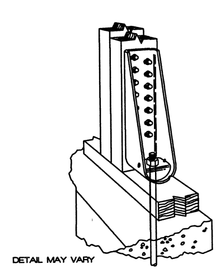

NTS (13/D3) SIMPSON PHD5 VERTICAL INSTALLATION

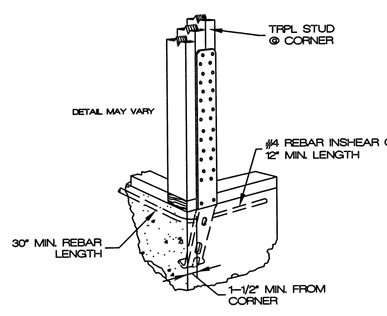

NTS (9/D3) SIMPSON STHD CORNER INSTALLATION

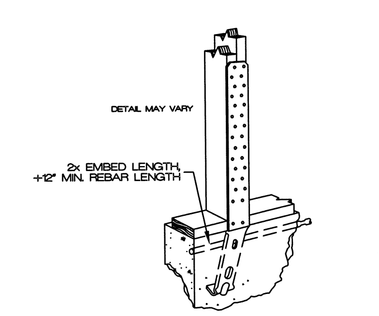

NTS (10/D3) SIMPSON STHD EDGE INSTALLATION

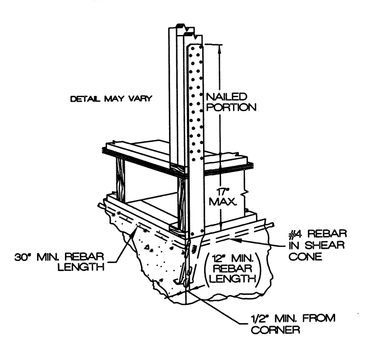

(11/D3) SIMPSON STHDRJ RIM JOIST INSTALLATION

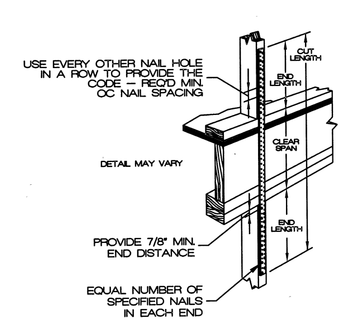

NTS (12/D3) SIMPSON CMSTC

SHEAR WALL	DESCRIPTION	CONSTRUCTION
	ALL METHODS	NAIL TOP AND BOTTOM PLATES OF BP's TO JOISTS ABOVE AND BELOW w/ 3 @ 16d @ 16" OC
1 LIB	METAL STRAP METHOD	SIMPSON CS16 STRAP NAILED TO STUDS SPACED AT 16" OC MAXIMUM. STRAPS SHALL BE INSTALLED IN 'V' OR 'X' PATTERN AT THE BRACE LOCATION AND FOR THE SPECIFIED LENGTH, ALTERNATIVE TO LET IN 1 X 4. *DBL. JOIST MIN. BELOW BRACED WALL WHEN FRAMING BELOW IS PARALLEL TO WALL LINE, OR SOLID BLOCK @ 16" OC BELOW BRACED WALL WHEN FRAMING BELOW IS PERPENDICULAR TO WALL LINE. COLLECTOR OR DRAG STRUT OVER.
2 WSP/CS–WSP	SHEATHING METHOD	7/16" STRUCTURAL SHEATHING OVER STUDS SPACED 16" OC w/ 8d COMMON NAILS AT 6" OC EDGE AND 12" FIELD, HORIZONTAL JOINTS SHALL BE BLOCKED FOR ANCHORAGE. *DBL. JOIST MIN. BELOW BRACED WALL WHEN FRAMING BELOW IS PARALLEL TO WALL LINE, OR SOLID BLOCK @ 16" OC BELOW BRACED WALL WHEN FRAMING BELOW IS PERPENDICULAR TO WALL LINE.
3 PFH	GARAGE DOOR PORTAL	6 TO 1 ASPECT RATIO, HEADER LENGTH AS SPECIFIED WITH FULL PANEL SHEATHING AT UPPER CORNERS CUTOUT FOR THE OPENING. BLOCKING AT HORIZONTAL JOINTS. NOTE FULL 4' WIDTH CUTOUT PANELS REQ'D AT CORNERS. STHD10 & LSTA STRAPS
4 CS–PF	PORTALS	HEADER LENGTH AS SPECIFIED EXTENDED TO NEXT LAYOUT STUD, 18" MINIMUM WIDTH. FULL PANEL SHEATHING REQ'D WITH CUTOUTS FOR OPENINGS. HORIZONTAL BLOCKING AT EDGES.

'J' BOLT SPACING FOR SHEAR WALLS IS 3' OC WITH STRAPS AS NOTED.

NTS (8/D3) SHEAR WALL SCHEDULE

LOAD TABLE

LOCATION	MIN. DL (PSF)	MIN. LL (PSF)
EXTERIOR BALCONIES	10	60
DECKS	10	40
CEILING w/o STORAGE	5	10
CEILING w/ STORAGE	10	20
NON-SLEEPING ROOMS	10	40
SLEEPING ROOMS	10	30
ROOF-LIGHT COVERING	10	25
ROOF-HEAVY COVERING	20	25

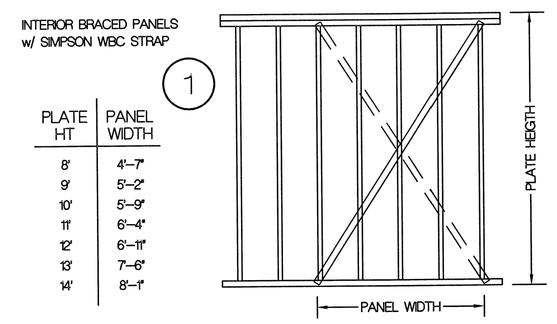

NTS (1/D3) INT. BRACED WALL PANEL

LIB, METAL STRAP ALT. TO LET IN 1 X 4

2018 International Residential Code
Third Printing: Sep 2019

Ken Sidorowicz, PC
P.O. Box 12089, Parkville, Missouri 64152
Tel. (816) 741-0852 Fax (816) 741-0858

ISSUE DATE	
REVISIONS	

2018 DETAIL SHEET

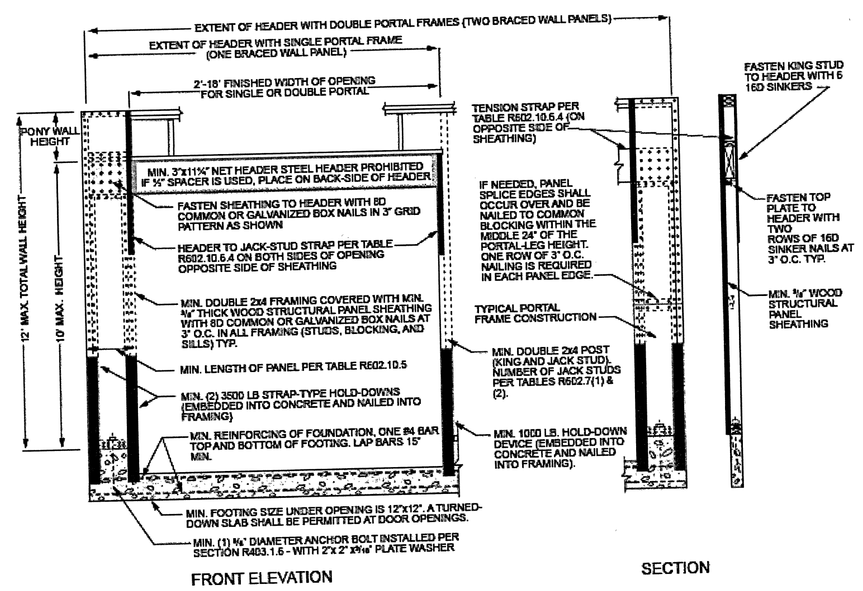

For SI: 1 inch = 25.4 mm, 1 foot = 304.8 mm.

FIGURE R602.10.6.2
METHOD PFH—PORTAL FRAME WITH HOLD-DOWNS

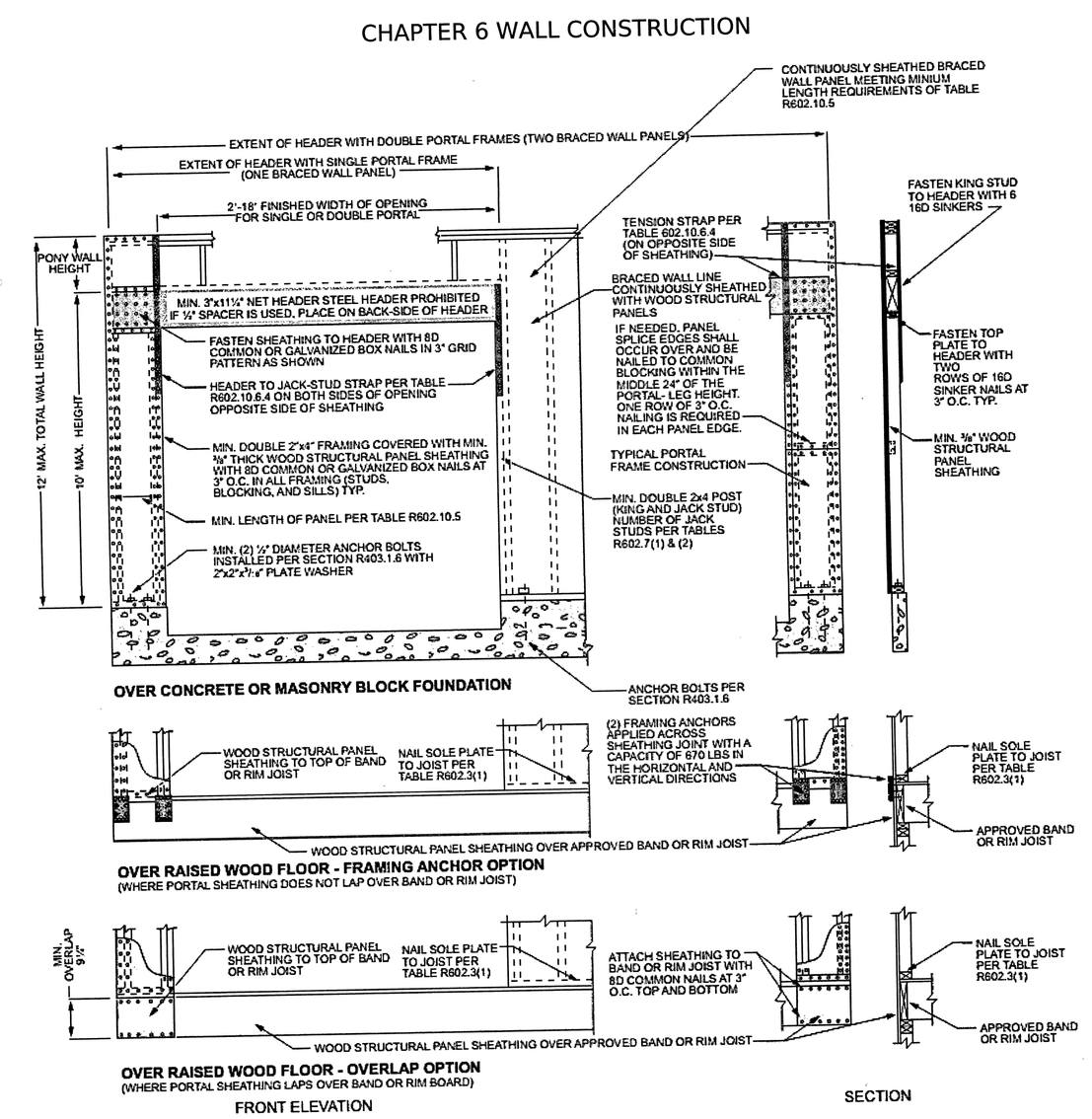

For SI: 1 inch = 25.4 mm, 1 foot = 304.8 mm.

FIGURE R602.10.6.4
METHOD CS-PF—CONTINUOUSLY SHEATHED PORTAL FRAME PANEL CONSTRUCTION

STATE OF MISSOURI
KENNETH SIDOROWICZ
NUMBER E-19986
REGISTERED PROFESSIONAL ENGINEER

2/14/21

D3