**RELEASE FOR CONSTRUCTION**
**AS NOTED ON PLANS REVIEW**
**DEVELOPMENT SERVICES**
**LEE'S SUMMIT, MISSOURI**

**02/11/2021**

MiTek USA, Inc.
16023 Swingley Ridge Rd
Chesterfield, MO 63017
314-434-1200

Re: 2623880
Summit/100 Stoney

The truss drawing(s) referenced below have been prepared by MiTek USA, Inc. under my direct supervision based on the parameters provided by Builders FirstSource (Valley Center).

Pages or sheets covered by this seal: I44681422 thru I44681461

My license renewal date for the state of Missouri is December 31, 2021.

Missouri COA: Engineering 001193

STATE OF MISSOURI
SCOTT M. SEVIER
NUMBER PE-2001018807
PROFESSIONAL ENGINEER

February 5,2021

Sevier, Scott ,Engineer

**IMPORTANT NOTE:** The seal on these truss component designs is a certification that the engineer named is licensed in the jurisdiction(s) identified and that the designs comply with ANSI/TPI 1. These designs are based upon parameters shown (e.g., loads, supports, dimensions, shapes and design codes), which were given to MiTek or TRENCO. Any project specific information included is for MiTek's or TRENCO's customers file reference purpose only, and was not taken into account in the preparation of these designs. MiTek or TRENCO has not independently verified the applicability of the design parameters or the designs for any particular building. Before use, the building designer should verify applicability of design parameters and properly incorporate these designs into the overall building design per ANSI/TPI 1, Chapter 2.

| Job | Truss | Truss Type | Qty | Ply | Summit/100 Stoney |
|---|---|---|---|---|---|
| 2623880 | A1 | GABLE | 1 | 1 | I44681422 |

Job Reference (optional)

RELEASE FOR CONSTRUCTION
AS NOTED ON PLANS REVIEW
DEVELOPMENT SERVICES
LEE'S SUMMIT, MISSOURI
02/11/2021

Builders FirstSource (Valley Center), Valley Center, KS - 67147, 8.240 s Mar 9 2020 MiTek Industries, Inc. Thu Feb 4 15:19:18 2021 Page 1
ID:VPVqvFnP0P0b1j2tZHOqezdKbx-gFPy9JJJ1MmEIf8BMbSraGubIjoX0lDkGnbWZhzoU2d

20-3-2 / 20-3-2 — 34-4-6 / 14-1-4

Scale = 1:65.9

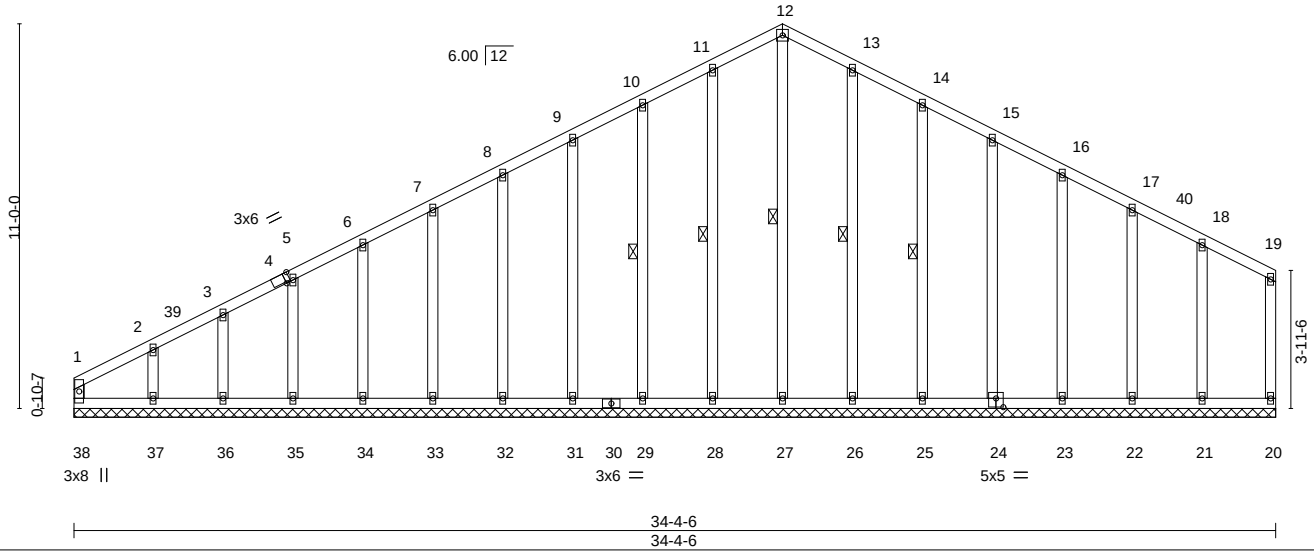


Plate Offsets (X,Y)-- [4:0-1-9,Edge], [24:0-2-8,0-3-0]

| LOADING (psf) | | SPACING- 2-0-0 | | CSI. | | DEFL. in (loc) l/defl L/d | | PLATES | GRIP |
|---|---|---|---|---|---|---|---|---|---|
| TCLL | 25.0 | Plate Grip DOL | 1.15 | TC | 0.08 | Vert(LL) n/a - n/a 999 | | MT20 | 197/144 |
| TCDL | 10.0 | Lumber DOL | 1.15 | BC | 0.10 | Vert(CT) n/a - n/a 999 | | | |
| BCLL | 0.0 * | Rep Stress Incr | YES | WB | 0.15 | Horz(CT) -0.00 20 n/a n/a | | | |
| BCDL | 10.0 | Code IRC2018/TPI2014 | | Matrix-R | | | | Weight: 203 lb | FT = 20% |

**LUMBER-**

| | |
|---|---|
| TOP CHORD | 2x4 SPF No.2 |
| BOT CHORD | 2x4 SPF No.2 |
| WEBS | 2x4 SPF No.2 |
| OTHERS | 2x4 SPF No.2 |

**BRACING-**

| | |
|---|---|
| TOP CHORD | Structural wood sheathing directly applied or 6-0-0 oc purlins, except end verticals. |
| BOT CHORD | Rigid ceiling directly applied or 10-0-0 oc bracing. |
| WEBS | 1 Row at midpt 12-27, 11-28, 10-29, 13-26, 14-25 |

**REACTIONS.** All bearings 34-4-6.
(lb) - Max Horz 38=217(LC 11)
Max Uplift All uplift 100 lb or less at joint(s) 20, 38, 28, 29, 31, 32, 33, 34, 35, 36, 26, 25, 24, 23, 22, 21 except 37=-140(LC 12)
Max Grav All reactions 250 lb or less at joint(s) 20, 38, 27, 28, 29, 31, 32, 33, 34, 35, 36, 37, 26, 25, 24, 23, 22, 21

**FORCES.** (lb) - Max. Comp./Max. Ten. - All forces 250 (lb) or less except when shown.
TOP CHORD 9-10=-135/269, 10-11=-152/317, 11-12=-166/356, 12-13=-166/356, 13-14=-152/317, 14-15=-135/269

**NOTES-**
1) Unbalanced roof live loads have been considered for this design.
2) Wind: ASCE 7-16; Vult=115mph (3-second gust) Vasd=91mph; TCDL=6.0psf; BCDL=6.0psf; h=15ft; Cat. II; Exp C; Enclosed; MWFRS (envelope) gable end zone and C-C Corner(3E) 0-1-12 to 3-1-12, Exterior(2N) 3-1-12 to 20-3-2, Corner(3R) 20-3-2 to 23-3-2, Exterior(2N) 23-3-2 to 34-2-10 zone; cantilever left and right exposed ; end vertical left and right exposed;C-C for members and forces & MWFRS for reactions shown; Lumber DOL=1.60 plate grip DOL=1.60
3) Truss designed for wind loads in the plane of the truss only. For studs exposed to wind (normal to the face), see Standard Industry Gable End Details as applicable, or consult qualified building designer as per ANSI/TPI 1.
4) All plates are 2x4 MT20 unless otherwise indicated.
5) Gable requires continuous bottom chord bearing.
6) Truss to be fully sheathed from one face or securely braced against lateral movement (i.e. diagonal web).
7) Gable studs spaced at 2-0-0 oc.
8) This truss has been designed for a 10.0 psf bottom chord live load nonconcurrent with any other live loads.
9) * This truss has been designed for a live load of 20.0psf on the bottom chord in all areas where a rectangle 3-6-0 tall by 2-0-0 wide will fit between the bottom chord and any other members.
10) Provide mechanical connection (by others) of truss to bearing plate capable of withstanding 100 lb uplift at joint(s) 20, 38, 28, 29, 31, 32, 33, 34, 35, 36, 26, 25, 24, 23, 22, 21 except (jt=lb) 37=140.
11) This truss is designed in accordance with the 2018 International Residential Code sections R502.11.1 and R802.10.2 and referenced standard ANSI/TPI 1.


February 5,2021



MiTek
16023 Swingley Ridge Rd
Chesterfield, MO 63017

| Job | Truss | Truss Type | Qty | Ply | Summit/100 Stoney |
|---|---|---|---|---|---|
| 2623880 | A2 | Roof Special | 5 | 1 | I44681423 |

Job Reference (optional)

**RELEASE FOR CONSTRUCTION**
**AS NOTED ON PLANS REVIEW**
**DEVELOPMENT SERVICES**
**LEE'S SUMMIT, MISSOURI**
**02/11/2021**

Builders FirstSource (Valley Center), Valley Center, KS - 67147, 8.240 s Mar 9 2020 MiTek Industries, Inc. Thu Feb 4 15:19:20 2021 Page 1
ID:VPVqvFnP0P0b1j2tZrlOqezdKbx-ceXja?LZZz1yXzHZU?UJfhznjXGgUSx1j54ceZzoU2b

Scale = 1:66.1

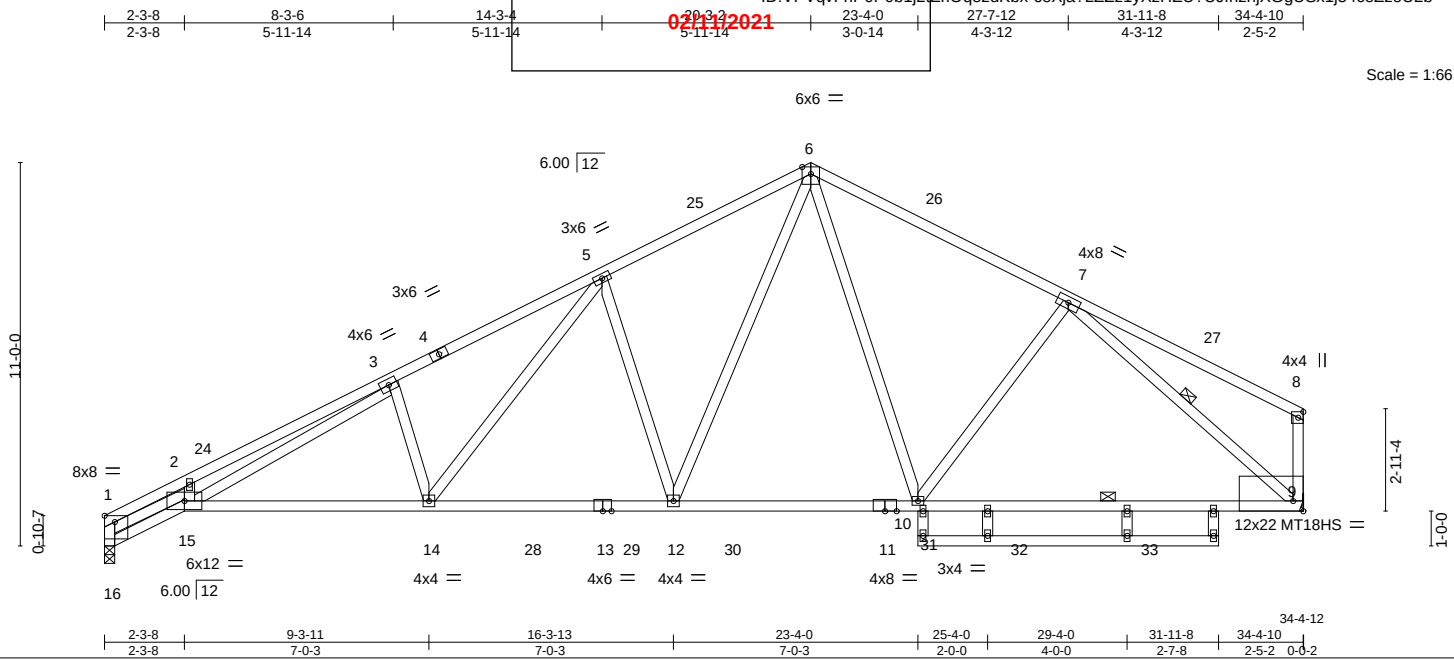


Plate Offsets (X,Y)-- [1:Edge,0-2-3], [9:Edge,0-3-8], [16:0-0-0,0-1-15]

| LOADING (psf) | | SPACING- | 2-0-0 | CSI. | | DEFL. | in | (loc) | l/defl | L/d | PLATES | GRIP |
|---|---|---|---|---|---|---|---|---|---|---|---|---|
| TCLL | 25.0 | Plate Grip DOL | 1.15 | TC | 0.73 | Vert(LL) | -0.49 | 9-10 | >831 | 240 | MT20 | 197/144 |
| TCDL | 10.0 | Lumber DOL | 1.15 | BC | 0.95 | Vert(CT) | -0.84 | 9-10 | >484 | 180 | MT18HS | 197/144 |
| BCLL | 0.0 * | Rep Stress Incr | YES | WB | 0.97 | Horz(CT) | 0.27 | 9 | n/a | n/a | | |
| BCDL | 10.0 | Code IRC2018/TPI2014 | | Matrix-AS | | | | | | | Weight: 173 lb | FT = 20% |

**LUMBER-**
TOP CHORD 2x4 SPF No.2 *Except*
1-4: 2x4 SPF 1650F 1.5E
BOT CHORD 2x4 SPF No.2 *Except*
13-15,9-11: 2x4 SPF 1650F 1.5E
WEBS 2x4 SPF No.2

**BRACING-**
TOP CHORD Structural wood sheathing directly applied, except end verticals.
BOT CHORD Rigid ceiling directly applied. Except:
10-0-0 oc bracing: 9-10
WEBS 1 Row at midpt 7-9

**REACTIONS.** (size) 9=Mechanical, 16=0-3-8
Max Horz 16=203(LC 9)
Max Uplift 9=-105(LC 13), 16=-143(LC 12)
Max Grav 9=1675(LC 2), 16=1638(LC 2)

**FORCES.** (lb) - Max. Comp./Max. Ten. - All forces 250 (lb) or less except when shown.
TOP CHORD 1-16=-1664/225, 1-2=-4827/640, 2-3=-4755/750, 3-5=-3116/388, 5-6=-2151/307, 6-7=-1844/235, 7-8=-273/88, 8-9=-257/75
BOT CHORD 15-16=-230/450, 14-15=-375/2883, 12-14=-198/2089, 10-12=-82/1453, 9-10=-147/1498
WEBS 1-15=-513/3936, 3-15=-435/1666, 3-14=-603/239, 5-14=-177/1056, 5-12=-817/274, 6-12=-206/1081, 6-10=-50/440, 7-10=-139/255, 7-9=-1819/188

**NOTES-**
1) Unbalanced roof live loads have been considered for this design.
2) Wind: ASCE 7-16; Vult=115mph (3-second gust) Vasd=91mph; TCDL=6.0psf; BCDL=6.0psf; h=15ft; Cat. II; Exp C; Enclosed; MWFRS (envelope) gable end zone and C-C Exterior(2E) 0-1-12 to 3-1-12, Interior(1) 3-1-12 to 20-3-2, Exterior(2R) 20-3-2 to 23-3-2 , Interior(1) 23-3-2 to 34-2-14 zone; cantilever left and right exposed ; end vertical left and right exposed;C-C for members and forces & MWFRS for reactions shown; Lumber DOL=1.60 plate grip DOL=1.60
3) All plates are MT20 plates unless otherwise indicated.
4) All plates are 2x4 MT20 unless otherwise indicated.
5) This truss has been designed for a 10.0 psf bottom chord live load nonconcurrent with any other live loads.
6) * This truss has been designed for a live load of 20.0psf on the bottom chord in all areas where a rectangle 3-6-0 tall by 2-0-0 wide will fit between the bottom chord and any other members, with BCDL = 10.0psf.
7) Refer to girder(s) for truss to truss connections.
8) Bearing at joint(s) 16 considers parallel to grain value using ANSI/TPI 1 angle to grain formula. Building designer should verify capacity of bearing surface.
9) Provide mechanical connection (by others) of truss to bearing plate capable of withstanding 100 lb uplift at joint(s) except (jt=lb) 9=105, 16=143.
10) This truss is designed in accordance with the 2018 International Residential Code sections R502.11.1 and R802.10.2 and referenced standard ANSI/TPI 1.
11) This truss design requires that a minimum of 7/16" structural wood sheathing be applied directly to the top chord and 1/2" gypsum sheetrock be applied directly to the bottom chord.

STATE OF MISSOURI
SCOTT M. SEVIER
NUMBER PE-2001018807
PROFESSIONAL ENGINEER

February 5,2021



MiTek
16023 Swingley Ridge Rd
Chesterfield, MO 63017

| Job | Truss | Truss Type | Qty | Ply | Summit/100 Stoney |
|---|---|---|---|---|---|
| 2623880 | A3 | Roof Special | 1 | 1 | I44681424 |

Job Reference (optional)

**RELEASE FOR CONSTRUCTION**
**AS NOTED ON PLANS REVIEW**
**DEVELOPMENT SERVICES**
**LEE'S SUMMIT, MISSOURI**
**02/11/2021**

Builders FirstSource (Valley Center), Valley Center, KS - 67147,

8.240 s Mar 9 2020 MiTek Industries, Inc. Thu Feb 4 15:19:21 2021 Page 1
ID:VPVqvFnP0P0b1j2tZrlOqezdKbx-4q55nLLBJH9p96sl1j?YCvWyPwctDv7AylqAA?zoU2a

| 2-3-8 | 8-3-6 | 14-3-4 | 20-3-2 | 27-3-13 | 34-8-0 |
|---|---|---|---|---|---|
| 2-3-8 | 5-11-14 | 5-11-14 | 5-11-14 | 7-0-11 | 7-4-3 |

Scale = 1:66.3

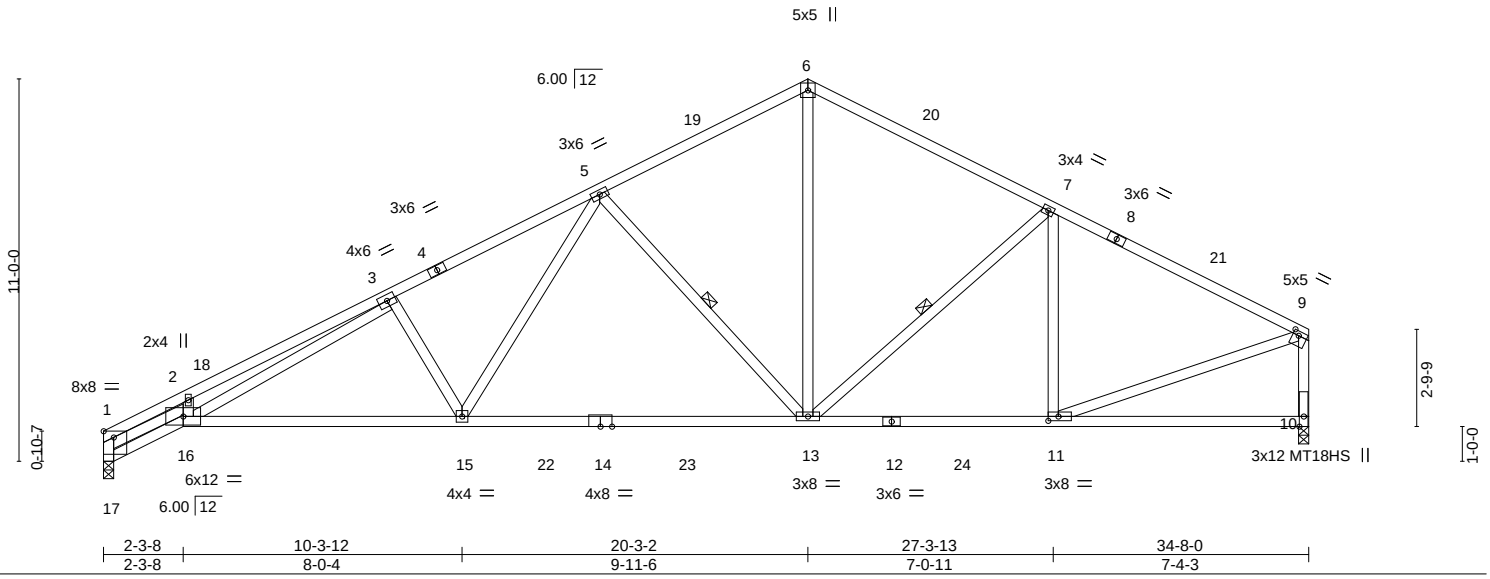


| 2-3-8 | 10-3-12 | 20-3-2 | 27-3-13 | 34-8-0 |
|---|---|---|---|---|
| 2-3-8 | 8-0-4 | 9-11-6 | 7-0-11 | 7-4-3 |

Plate Offsets (X,Y)-- [1:Edge,0-2-3], [9:0-2-0,0-1-8], [11:0-3-8,0-1-8], [17:0-0-0,0-1-15]

| **LOADING** (psf) | | **SPACING-** 2-0-0 | **CSI.** | **DEFL.** in (loc) l/defl L/d | **PLATES** | **GRIP** |
|---|---|---|---|---|---|---|
| TCLL | 25.0 | Plate Grip DOL 1.15 | TC 0.73 | Vert(LL) -0.43 13-15 >954 240 | MT20 | 197/144 |
| TCDL | 10.0 | Lumber DOL 1.15 | BC 0.95 | Vert(CT) -0.74 13-15 >558 180 | MT18HS | 197/144 |
| BCLL | 0.0 * | Rep Stress Incr YES | WB 0.97 | Horz(CT) 0.26 10 n/a n/a | | |
| BCDL | 10.0 | Code IRC2018/TPI2014 | Matrix-AS | | Weight: 157 lb | FT = 20% |

**LUMBER-**
TOP CHORD 2x4 SPF No.2 *Except*
1-4: 2x4 SPF 1650F 1.5E
BOT CHORD 2x4 SPF No.2 *Except*
14-16,10-12: 2x4 SPF 1650F 1.5E
WEBS 2x4 SPF No.2

**BRACING-**
TOP CHORD Structural wood sheathing directly applied, except end verticals.
BOT CHORD Rigid ceiling directly applied.
WEBS 1 Row at midpt 5-13, 7-13

**REACTIONS.** (size) 10=0-3-8, 17=0-3-8
Max Horz 17=200(LC 9)
Max Uplift 10=-107(LC 13), 17=-143(LC 12)
Max Grav 10=1646(LC 2), 17=1635(LC 2)

**FORCES.** (lb) - Max. Comp./Max. Ten. - All forces 250 (lb) or less except when shown.
TOP CHORD 1-17=-1667/226, 1-2=-4837/642, 2-3=-4764/752, 3-5=-2974/337, 5-6=-1722/243, 6-7=-1744/238, 7-9=-1875/179, 9-10=-1523/168
BOT CHORD 16-17=-229/449, 15-16=-378/2866, 13-15=-204/2064, 11-13=-125/1602
WEBS 1-16=-515/3950, 3-16=-434/1694, 3-15=-603/237, 5-15=-106/1030, 5-13=-890/257, 6-13=-88/1116, 7-13=-307/166, 7-11=-366/119, 9-11=-98/1597

**NOTES-**
1) Unbalanced roof live loads have been considered for this design.
2) Wind: ASCE 7-16; Vult=115mph (3-second gust) Vasd=91mph; TCDL=6.0psf; BCDL=6.0psf; h=15ft; Cat. II; Exp C; Enclosed; MWFRS (envelope) gable end zone and C-C Exterior(2E) 0-1-12 to 3-1-12, Interior(1) 3-1-12 to 20-3-2, Exterior(2R) 20-3-2 to 23-3-2 , Interior(1) 23-3-2 to 34-6-4 zone; cantilever left and right exposed ; end vertical left and right exposed;C-C for members and forces & MWFRS for reactions shown; Lumber DOL=1.60 plate grip DOL=1.60
3) All plates are MT20 plates unless otherwise indicated.
4) This truss has been designed for a 10.0 psf bottom chord live load nonconcurrent with any other live loads.
5) * This truss has been designed for a live load of 20.0psf on the bottom chord in all areas where a rectangle 3-6-0 tall by 2-0-0 wide will fit between the bottom chord and any other members, with BCDL = 10.0psf.
6) Bearing at joint(s) 17 considers parallel to grain value using ANSI/TPI 1 angle to grain formula. Building designer should verify capacity of bearing surface.
7) Provide mechanical connection (by others) of truss to bearing plate capable of withstanding 100 lb uplift at joint(s) except (jt=lb) 10=107, 17=143.
8) This truss is designed in accordance with the 2018 International Residential Code sections R502.11.1 and R802.10.2 and referenced standard ANSI/TPI 1.
9) This truss design requires that a minimum of 7/16" structural wood sheathing be applied directly to the top chord and 1/2" gypsum sheetrock be applied directly to the bottom chord.


February 5,2021



MiTek
16023 Swingley Ridge Rd
Chesterfield, MO 63017

| Job | Truss | Truss Type | Qty | Ply | Summit/100 Stoney |
|---|---|---|---|---|---|
| 2623880 | B1 | ROOF SPECIAL | 2 | 1 | I44681425 |

Job Reference (optional)

**RELEASE FOR CONSTRUCTION**
**AS NOTED ON PLANS REVIEW**
**DEVELOPMENT SERVICES**
**LEE'S SUMMIT, MISSOURI**
**02/11/2021**

Builders FirstSource (Valley Center), Valley Center, KS - 67147, 8.240 s Mar 9 2020 MiTek Industries, Inc. Thu Feb 4 15:19:22 2021 Page 1
ID:VPVqvFnP0P0b1j2tZnOqezdKbx-Z1fT?gMp4aHfnGRybQWnk635sKxvyNdJAPZjiSzoU2Z

-0-11-0 2-3-8 | 8-3-6 | 14-3-4 | 20-3-2 | 27-3-13 | 34-8-0
0-11-0 2-3-8 | 5-11-14 | 5-11-14 | 5-11-14 | 7-0-11 | 7-4-3

Scale = 1:71.4

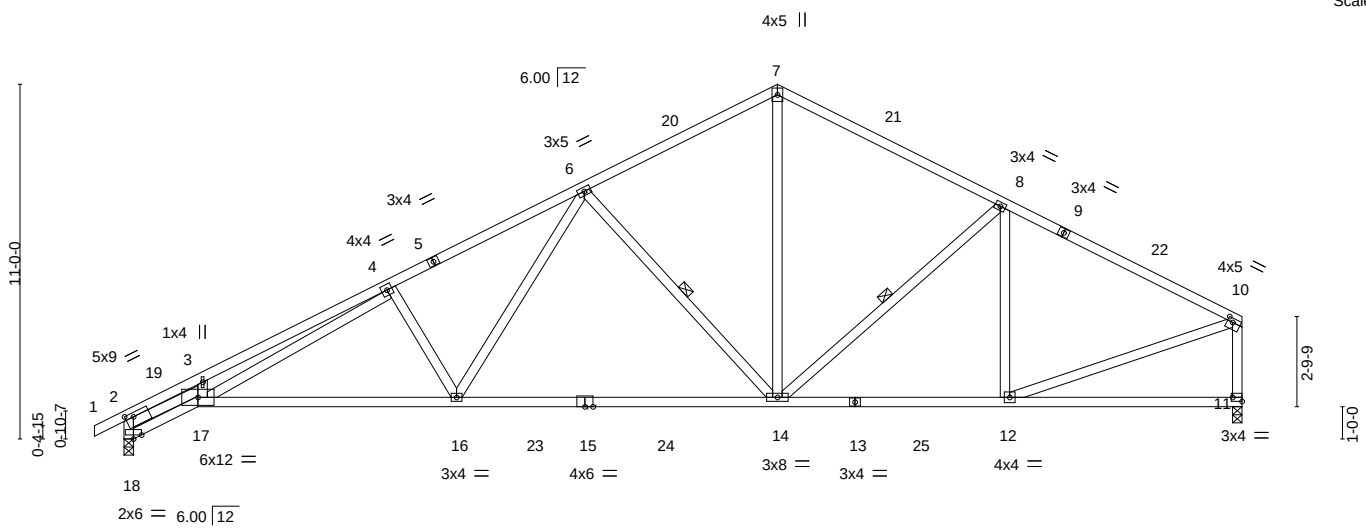


2-3-8 | 10-3-12 | 20-3-2 | 27-3-13 | 34-8-0
2-3-8 | 8-0-4 | 9-11-6 | 7-0-11 | 7-4-3

Plate Offsets (X,Y)-- [2:0-3-0,0-1-8], [10:0-2-0,0-1-8], [11:Edge,0-1-8], [18:0-3-0,Edge]

| **LOADING** (psf) | | **SPACING-** 2-0-0 | **CSI.** | | **DEFL.** in (loc) l/defl L/d | **PLATES** | **GRIP** |
|---|---|---|---|---|---|---|---|
| TCLL | 25.0 | Plate Grip DOL 1.15 | TC | 0.88 | Vert(LL) -0.40 14-16 >999 240 | MT20 | 244/190 |
| TCDL | 10.0 | Lumber DOL 1.15 | BC | 0.96 | Vert(CT) -0.68 14-16 >604 180 | | |
| BCLL | 0.0 * | Rep Stress Incr YES | WB | 0.95 | Horz(CT) 0.24 11 n/a n/a | | |
| BCDL | 10.0 | Code IRC2018/TPI2014 | Matrix-AS | | | Weight: 207 lb | FT = 20% |

**LUMBER-**
TOP CHORD 2x4 SP No.2 *Except*
1-5: 2x4 SP No.1
BOT CHORD 2x4 SP No.1 *Except*
17-18: 2x4 SP No.2
WEBS 2x4 SP No.2

**BRACING-**
TOP CHORD Structural wood sheathing directly applied, except end verticals.
BOT CHORD Rigid ceiling directly applied.
WEBS 1 Row at midpt 6-14, 8-14

**REACTIONS.** (size) 11=0-3-8, 18=0-3-8
Max Horz 18=209(LC 9)
Max Uplift 11=-107(LC 13), 18=-164(LC 12)
Max Grav 11=1645(LC 2), 18=1697(LC 2)

**FORCES.** (lb) - Max. Comp./Max. Ten. - All forces 250 (lb) or less except when shown.
TOP CHORD 2-18=-1738/249, 2-3=-4793/636, 3-4=-4702/742, 4-6=-2968/336, 6-7=-1721/241, 7-8=-1743/238, 8-10=-1873/177, 10-11=-1522/168
BOT CHORD 17-18=-234/466, 16-17=-377/2859, 14-16=-203/2061, 12-14=-125/1601
WEBS 2-17=-503/3885, 4-17=-424/1639, 4-16=-599/237, 6-16=-106/1026, 6-14=-887/256, 7-14=-87/1115, 8-14=-307/167, 8-12=-366/119, 10-12=-98/1596

**NOTES-**
1) Unbalanced roof live loads have been considered for this design.
2) Wind: ASCE 7-16; Vult=115mph (3-second gust) Vasd=91mph; TCDL=6.0psf; BCDL=6.0psf; h=15ft; Cat. II; Exp C; Enclosed; MWFRS (envelope) gable end zone and C-C Exterior(2E) -0-11-0 to 2-1-0, Interior(1) 2-1-0 to 20-3-2, Exterior(2R) 20-3-2 to 23-3-2, Interior(1) 23-3-2 to 34-6-4 zone; cantilever left and right exposed ; end vertical left and right exposed;C-C for members and forces & MWFRS for reactions shown; Lumber DOL=1.60 plate grip DOL=1.60
3) This truss has been designed for a 10.0 psf bottom chord live load nonconcurrent with any other live loads.
4) * This truss has been designed for a live load of 20.0psf on the bottom chord in all areas where a rectangle 3-6-0 tall by 2-0-0 wide will fit between the bottom chord and any other members, with BCDL = 10.0psf.
5) Bearing at joint(s) 18 considers parallel to grain value using ANSI/TPI 1 angle to grain formula. Building designer should verify capacity of bearing surface.
6) Provide mechanical connection (by others) of truss to bearing plate capable of withstanding 100 lb uplift at joint(s) except (jt=lb) 11=107, 18=164.
7) This truss is designed in accordance with the 2018 International Residential Code sections R502.11.1 and R802.10.2 and referenced standard ANSI/TPI 1.
8) This truss design requires that a minimum of 7/16" structural wood sheathing be applied directly to the top chord and 1/2" gypsum sheetrock be applied directly to the bottom chord.

STATE OF MISSOURI
SCOTT M. SEVIER
NUMBER PE-2001018807
PROFESSIONAL ENGINEER

February 5,2021




MiTek
16023 Swingley Ridge Rd
Chesterfield, MO 63017

| Job | Truss | Truss Type | Qty | Ply | Summit/100 Stoney |
|---|---|---|---|---|---|
| 2623880 | B1A | ROOF SPECIAL | 1 | 1 | I44681426 |

Job Reference (optional)

**RELEASE FOR CONSTRUCTION**
**AS NOTED ON PLANS REVIEW**
**DEVELOPMENT SERVICES**
**LEE'S SUMMIT, MISSOURI**
**02/11/2021**

Builders FirstSource (Valley Center), Valley Center, KS - 67147, 8.240 s Mar 9 2020 MiTek Industries, Inc. Thu Feb 4 15:19:24 2021 Page 1
ID:VPVqvFnP0P0b1j2tZrlOqezdKbx-VPnDPMO3cCXN0abKjrZFqX8Rm8eTQH8cej2qnKzoU2X

| -1-11-0 | 2-3-8 | 8-3-6 | 14-3-4 | 20-3-2 | 27-3-13 | 34-8-0 |
|---|---|---|---|---|---|---|
| 1-11-0 | 2-3-8 | 5-11-14 | 5-11-14 | 5-11-14 | 7-0-11 | 7-4-3 |

Scale = 1:72.1

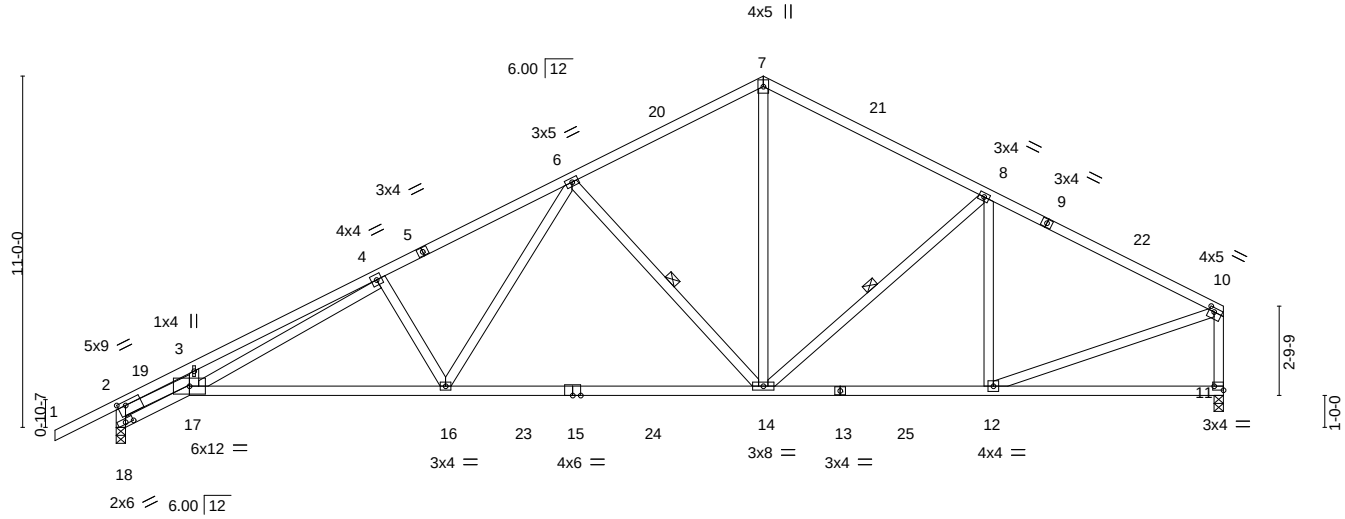


| 2-3-8 | 10-3-12 | 20-3-2 | 27-3-13 | 34-8-0 |
|---|---|---|---|---|
| 2-3-8 | 8-0-4 | 9-11-6 | 7-0-11 | 7-4-3 |

Plate Offsets (X,Y)-- [2:0-3-0,0-1-8], [10:0-2-0,0-1-8], [11:Edge,0-1-8], [18:0-3-0,0-0-11]

| **LOADING** (psf) | | **SPACING-** 2-0-0 | | **CSI.** | | **DEFL.** | in | (loc) | l/defl | L/d | **PLATES** | **GRIP** |
|---|---|---|---|---|---|---|---|---|---|---|---|---|
| TCLL | 25.0 | Plate Grip DOL | 1.15 | TC | 0.85 | Vert(LL) | -0.40 | 14-16 | >999 | 240 | MT20 | 244/190 |
| TCDL | 10.0 | Lumber DOL | 1.15 | BC | 0.96 | Vert(CT) | -0.68 | 14-16 | >607 | 180 | | |
| BCLL | 0.0 * | Rep Stress Incr | YES | WB | 0.95 | Horz(CT) | 0.24 | 11 | n/a | n/a | | |
| BCDL | 10.0 | Code IRC2018/TPI2014 | | Matrix-AS | | | | | | | Weight: 208 lb | FT = 20% |

**LUMBER-**
TOP CHORD 2x4 SP No.2 *Except*
1-5: 2x4 SP No.1
BOT CHORD 2x4 SP No.1 *Except*
17-18: 2x4 SP No.2
WEBS 2x4 SP No.2

**BRACING-**
TOP CHORD Structural wood sheathing directly applied, except end verticals.
BOT CHORD Rigid ceiling directly applied.
WEBS 1 Row at midpt 6-14, 8-14

**REACTIONS.** (size) 11=0-3-8, 18=0-3-8
Max Horz 18=217(LC 9)
Max Uplift 11=-107(LC 13), 18=-184(LC 12)
Max Grav 11=1642(LC 2), 18=1757(LC 2)

**FORCES.** (lb) - Max. Comp./Max. Ten. - All forces 250 (lb) or less except when shown.
TOP CHORD 2-18=-1755/256, 2-3=-4682/597, 3-4=-4585/701, 4-6=-2952/331, 6-7=-1717/237, 7-8=-1739/237, 8-10=-1870/174, 10-11=-1519/167
BOT CHORD 17-18=-201/367, 16-17=-371/2841, 14-16=-201/2054, 12-14=-124/1598
WEBS 2-17=-498/3879, 4-17=-388/1546, 4-16=-586/233, 6-16=-102/1015, 6-14=-881/254, 7-14=-86/1111, 8-14=-307/167, 8-12=-365/119, 10-12=-97/1593

**NOTES-**
1) Unbalanced roof live loads have been considered for this design.
2) Wind: ASCE 7-16; Vult=115mph (3-second gust) Vasd=91mph; TCDL=6.0psf; BCDL=6.0psf; h=15ft; Cat. II; Exp C; Enclosed; MWFRS (envelope) gable end zone and C-C Exterior(2E) -1-11-0 to 1-1-0, Interior(1) 1-1-0 to 20-3-2, Exterior(2R) 20-3-2 to 23-3-2, Interior(1) 23-3-2 to 34-6-4 zone; cantilever left and right exposed ; end vertical left and right exposed;C-C for members and forces & MWFRS for reactions shown; Lumber DOL=1.60 plate grip DOL=1.60
3) This truss has been designed for a 10.0 psf bottom chord live load nonconcurrent with any other live loads.
4) * This truss has been designed for a live load of 20.0psf on the bottom chord in all areas where a rectangle 3-6-0 tall by 2-0-0 wide will fit between the bottom chord and any other members, with BCDL = 10.0psf.
5) Bearing at joint(s) 18 considers parallel to grain value using ANSI/TPI 1 angle to grain formula. Building designer should verify capacity of bearing surface.
6) Provide mechanical connection (by others) of truss to bearing plate capable of withstanding 100 lb uplift at joint(s) except (jt=lb) 11=107, 18=184.
7) This truss is designed in accordance with the 2018 International Residential Code sections R502.11.1 and R802.10.2 and referenced standard ANSI/TPI 1.
8) This truss design requires that a minimum of 7/16" structural wood sheathing be applied directly to the top chord and 1/2" gypsum sheetrock be applied directly to the bottom chord.


February 5,2021



MiTek
16023 Swingley Ridge Rd
Chesterfield, MO 63017

| Job | Truss | Truss Type | Qty | Ply | Summit/100 Stoney |
|---|---|---|---|---|---|
| 2623880 | C1 | ROOF SPECIAL | 2 | 1 | I44681427 |

Job Reference (optional)

RELEASE FOR CONSTRUCTION
AS NOTED ON PLANS REVIEW
DEVELOPMENT SERVICES
LEE'S SUMMIT, MISSOURI
02/11/2021

Builders FirstSource (Valley Center), Valley Center, KS - 67147, 8.240 s Mar 9 2020 MiTek Industries, Inc. Thu Feb 4 15:19:25 2021 Page 1

ID:VPVqvFnP0P0b1j2tZrOqezdKbx-zbKcdiOiNVfEekAXGZ4UMlhaMY?09l2mtNoNJnzoU2W

-0-11-0 2-3-8 | 8-3-6 | 14-3-4 | 20-3-2 | 22-2-0 | 26-1-0 | 30-3-8
0-11-0 2-3-8 | 5-11-14 | 5-11-14 | 5-11-14 | 1-10-14 | 3-11-0 | 4-2-8

Scale = 1:73.5

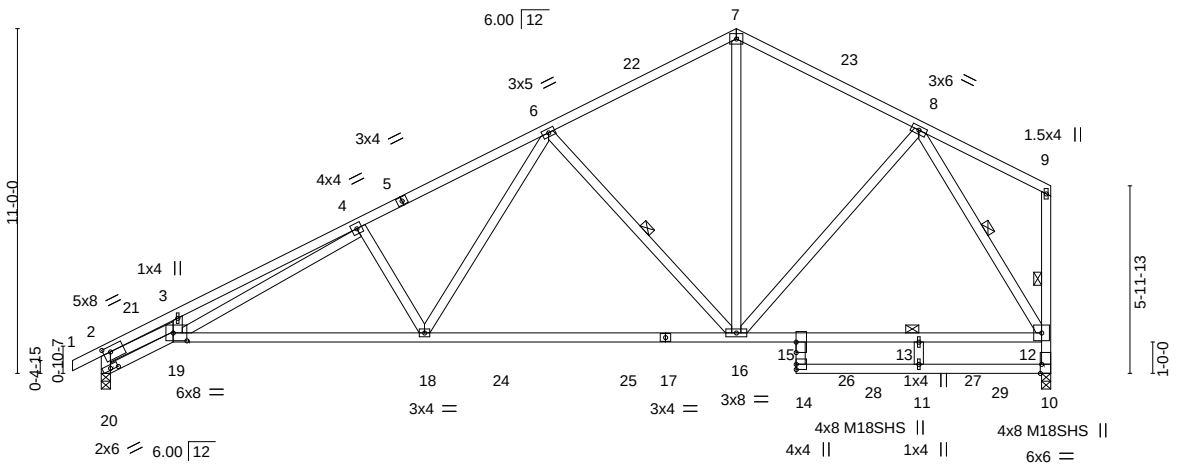


2-3-8 | 10-3-12 | 20-3-2 | 22-2-0 | 26-1-0 | 30-3-8
2-3-8 | 8-0-4 | 9-11-6 | 1-10-14 | 3-11-0 | 4-2-8

Plate Offsets (X,Y)-- [2:0-2-12,0-2-0], [10:0-3-8,Edge], [15:0-4-0,0-0-0], [19:0-5-4,0-3-0], [20:0-3-0,0-0-11]

| LOADING (psf) | | SPACING- | 2-0-0 | CSI. | | DEFL. | in | (loc) | l/defl | L/d | PLATES | GRIP |
|---|---|---|---|---|---|---|---|---|---|---|---|---|
| TCLL | 25.0 | Plate Grip DOL | 1.15 | TC | 0.99 | Vert(LL) | -0.29 | 16-18 | >999 | 240 | MT20 | 244/190 |
| TCDL | 10.0 | Lumber DOL | 1.15 | BC | 0.87 | Vert(CT) | -0.52 | 16-18 | >688 | 180 | M18SHS | 244/190 |
| BCLL | 0.0 * | Rep Stress Incr | YES | WB | 0.85 | Horz(CT) | 0.22 | 10 | n/a | n/a | | |
| BCDL | 10.0 | Code IRC2018/TPI2014 | | Matrix-AS | | | | | | | Weight: 202 lb | FT = 20% |

**LUMBER-**

TOP CHORD 2x4 SP No.2
BOT CHORD 2x4 SP No.2 *Except*
17-19,12-17: 2x4 SP No.1
WEBS 2x4 SP No.2

**BRACING-**

TOP CHORD Structural wood sheathing directly applied, except end verticals.
BOT CHORD Rigid ceiling directly applied.
WEBS 1 Row at midpt 6-16, 9-10, 8-12
JOINTS 1 Brace at Jt(s): 13

**REACTIONS.** (size) 10=0-3-8, 20=0-3-8
Max Horz 20=280(LC 9)
Max Uplift 10=-91(LC 12), 20=-153(LC 12)
Max Grav 10=1621(LC 2), 20=1514(LC 2)

**FORCES.** (lb) - Max. Comp./Max. Ten. - All forces 250 (lb) or less except when shown.
TOP CHORD 2-20=-1543/230, 2-3=-4257/583, 3-4=-4190/693, 4-6=-2519/307, 6-7=-1307/208, 7-8=-1303/204, 10-12=-1470/159
BOT CHORD 19-20=-330/416, 18-19=-369/2475, 16-18=-255/1704, 15-16=-154/761, 13-15=-227/587, 12-13=-227/587, 11-14=0/484, 10-11=0/484
WEBS 2-19=-461/3458, 4-19=-405/1565, 4-18=-577/233, 6-18=-105/990, 6-16=-872/257, 7-16=-64/765, 8-12=-1457/181, 8-16=-1/559

**NOTES-**

1) Unbalanced roof live loads have been considered for this design.
2) Wind: ASCE 7-16; Vult=115mph (3-second gust) Vasd=91mph; TCDL=6.0psf; BCDL=6.0psf; h=15ft; Cat. II; Exp C; Enclosed; MWFRS (envelope) gable end zone and C-C Exterior(2E) -0-11-0 to 2-1-0, Interior(1) 2-1-0 to 20-3-2, Exterior(2R) 20-3-2 to 23-3-2, Interior(1) 23-3-2 to 30-1-12 zone; cantilever left and right exposed ; end vertical left and right exposed;C-C for members and forces & MWFRS for reactions shown; Lumber DOL=1.60 plate grip DOL=1.60
3) All plates are MT20 plates unless otherwise indicated.
4) This truss has been designed for a 10.0 psf bottom chord live load nonconcurrent with any other live loads.
5) * This truss has been designed for a live load of 20.0psf on the bottom chord in all areas where a rectangle 3-6-0 tall by 2-0-0 wide will fit between the bottom chord and any other members, with BCDL = 10.0psf.
6) Bearing at joint(s) 20 considers parallel to grain value using ANSI/TPI 1 angle to grain formula. Building designer should verify capacity of bearing surface.
7) Provide mechanical connection (by others) of truss to bearing plate capable of withstanding 100 lb uplift at joint(s) 10 except (jt=lb) 20=153.
8) This truss is designed in accordance with the 2018 International Residential Code sections R502.11.1 and R802.10.2 and referenced standard ANSI/TPI 1.
9) This truss design requires that a minimum of 7/16" structural wood sheathing be applied directly to the top chord and 1/2" gypsum sheetrock be applied directly to the bottom chord.


February 5,2021



MiTek
16023 Swingley Ridge Rd
Chesterfield, MO 63017

| Job | Truss | Truss Type | Qty | Ply | Summit/100 Stoney |
|---|---|---|---|---|---|
| 2623880 | C1A | ROOF SPECIAL | 2 | 1 | I44681428 |

Job Reference (optional)

**RELEASE FOR CONSTRUCTION**
**AS NOTED ON PLANS REVIEW**
**DEVELOPMENT SERVICES**
**LEE'S SUMMIT, MISSOURI**
**02/11/2021**

Builders FirstSource (Valley Center), Valley Center, KS - 67147, 8.240 s Mar 9 2020 MiTek Industries, Inc. Thu Feb 4 15:19:26 2021 Page 1

ID:VPVqvFnP0P0b1j2tzrlOqezdKbx-Rou_q2PK8pn5FuljqGbjvyDk2xJWuCxv51XxrDzoU2V

| -1-11-0 | 2-3-8 | 8-3-6 | 14-3-4 | 20-3-2 | 21-8-8 | 24-0-0 | 30-3-8 |
|---|---|---|---|---|---|---|---|
| 1-11-0 | 2-3-8 | 5-11-14 | 5-11-14 | 5-11-14 | 1-5-6 | 2-3-8 | 6-3-8 |

Scale = 1:69.0

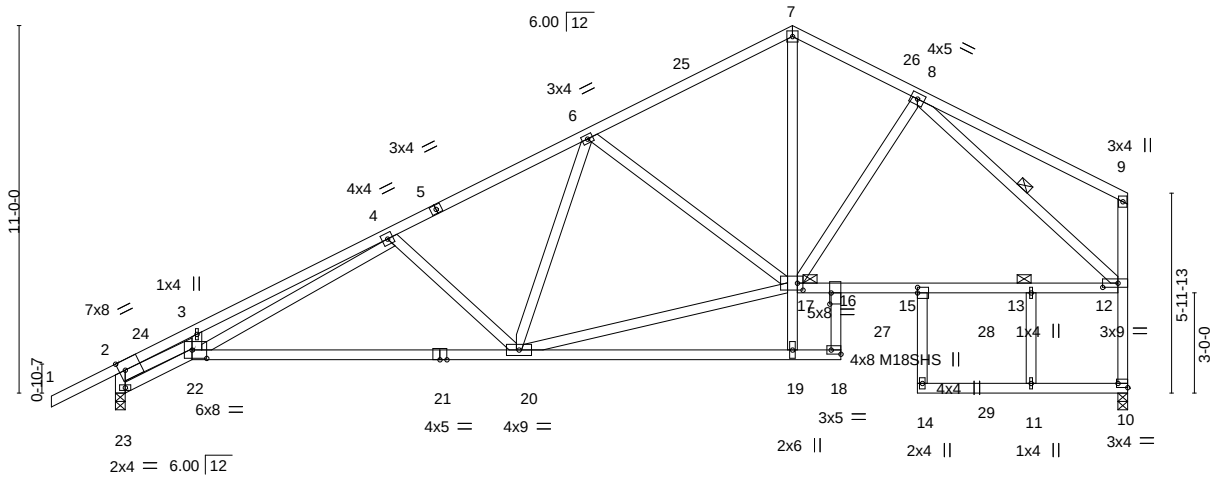


| 2-3-8 | 12-0-0 | 20-3-2 | 21-8-8 | 24-0-0 | 27-4-13 | 30-3-8 |
|---|---|---|---|---|---|---|
| 2-3-8 | 9-8-8 | 8-3-2 | 1-5-6 | 2-3-8 | 3-4-13 | 2-10-11 |

Plate Offsets (X,Y)-- [2:0-2-3,Edge], [10:Edge,0-1-8], [12:0-5-8,0-1-8], [15:0-2-0,0-0-0], [16:0-4-0,0-0-8], [17:0-2-0,0-2-8], [18:Edge,0-1-8], [22:0-5-4,0-3-0]

| **LOADING** (psf) | | **SPACING-** 2-0-0 | **CSI.** | | **DEFL.** | in | (loc) | l/defl | L/d | **PLATES** | **GRIP** |
|---|---|---|---|---|---|---|---|---|---|---|---|
| TCLL | 25.0 | Plate Grip DOL 1.15 | TC | 1.00 | Vert(LL) | -0.41 | 20-22 | >869 | 240 | MT20 | 244/190 |
| TCDL | 10.0 | Lumber DOL 1.15 | BC | 0.92 | Vert(CT) | -0.80 | 20-22 | >448 | 180 | M18SHS | 244/190 |
| BCLL | 0.0 * | Rep Stress Incr YES | WB | 0.87 | Horz(CT) | 0.31 | 10 | n/a | n/a | | |
| BCDL | 10.0 | Code IRC2018/TPI2014 | Matrix-AS | | | | | | | Weight: 220 lb | FT = 20% |

**LUMBER-**
TOP CHORD 2x4 SP No.2
BOT CHORD 2x4 SP No.2 *Except*
21-22,18-21: 2x4 SP No.1
WEBS 2x4 SP No.2

**BRACING-**
TOP CHORD Structural wood sheathing directly applied, except end verticals.
BOT CHORD Rigid ceiling directly applied.
WEBS 1 Row at midpt 8-12
JOINTS 1 Brace at Jt(s): 17, 13

**REACTIONS.** (size) 10=0-3-8, 23=0-3-8
Max Horz 23=289(LC 9)
Max Uplift 10=-89(LC 12), 23=-173(LC 12)
Max Grav 10=1537(LC 2), 23=1538(LC 2)

**FORCES.** (lb) - Max. Comp./Max. Ten. - All forces 250 (lb) or less except when shown.
TOP CHORD 2-23=-1572/224, 2-3=-4213/509, 3-4=-4135/620, 4-6=-2155/249, 6-7=-1562/195, 7-8=-1556/223, 10-12=-1422/155, 9-12=-256/102
BOT CHORD 22-23=-310/346, 20-22=-380/2314, 16-18=-304/0, 16-17=-160/1434, 15-16=-203/1247, 13-15=-209/1184, 12-13=-209/1184
WEBS 2-22=-419/3555, 4-22=-328/1697, 4-20=-616/236, 17-19=0/503, 7-17=-74/1070, 8-17=-65/317, 8-12=-1571/148, 6-20=-13/310, 17-20=-233/2013, 6-17=-646/228

**NOTES-**
1) Unbalanced roof live loads have been considered for this design.
2) Wind: ASCE 7-16; Vult=115mph (3-second gust) Vasd=91mph; TCDL=6.0psf; BCDL=6.0psf; h=15ft; Cat. II; Exp C; Enclosed; MWFRS (envelope) gable end zone and C-C Exterior(2E) -1-11-0 to 1-1-0, Interior(1) 1-1-0 to 20-3-2, Exterior(2R) 20-3-2 to 23-3-2, Interior(1) 23-3-2 to 30-1-12 zone; cantilever left and right exposed ; end vertical left and right exposed;C-C for members and forces & MWFRS for reactions shown; Lumber DOL=1.60 plate grip DOL=1.60
3) All plates are MT20 plates unless otherwise indicated.
4) This truss has been designed for a 10.0 psf bottom chord live load nonconcurrent with any other live loads.
5) * This truss has been designed for a live load of 20.0psf on the bottom chord in all areas where a rectangle 3-6-0 tall by 2-0-0 wide will fit between the bottom chord and any other members, with BCDL = 10.0psf.
6) Bearing at joint(s) 23 considers parallel to grain value using ANSI/TPI 1 angle to grain formula. Building designer should verify capacity of bearing surface.
7) Provide mechanical connection (by others) of truss to bearing plate capable of withstanding 100 lb uplift at joint(s) 10 except (jt=lb) 23=173.
8) This truss is designed in accordance with the 2018 International Residential Code sections R502.11.1 and R802.10.2 and referenced standard ANSI/TPI 1.
9) This truss design requires that a minimum of 7/16" structural wood sheathing be applied directly to the top chord and 1/2" gypsum sheetrock be applied directly to the bottom chord.

STATE OF MISSOURI
SCOTT M. SEVIER
NUMBER PE-2001018807
PROFESSIONAL ENGINEER

February 5,2021




MiTek
16023 Swingley Ridge Rd
Chesterfield, MO 63017

| Job | Truss | Truss Type | Qty | Ply | Summit/100 Stoney |
|---|---|---|---|---|---|
| 2623880 | C2 | Roof Special | 2 | 1 | I44681429 |
| | | | | | Job Reference (optional) |

**RELEASE FOR CONSTRUCTION**
**AS NOTED ON PLANS REVIEW**
**DEVELOPMENT SERVICES**
**LEE'S SUMMIT, MISSOURI**
**02/11/2021**

Builders FirstSource (Valley Center), Valley Center, KS - 67147, 8.240 s Mar 9 2020 MiTek Industries, Inc. Thu Feb 4 15:19:28 2021 Page 1
ID:VPVqvFnP0P0b1j2tZrIOqezdKbx-NA0kFkRagQ1pVBv6yhdB_NJ8Yl?1MCvCZL02w5zoU2T

-0-11-0 | 6-7-4 | 12-11-0 | 20-3-2 | 22-2-0 | 26-1-0 | 30-3-8
0-11-0 | 6-7-4 | 6-3-12 | 7-4-2 | 1-10-14 | 3-11-0 | 4-2-8

Scale = 1:72.8

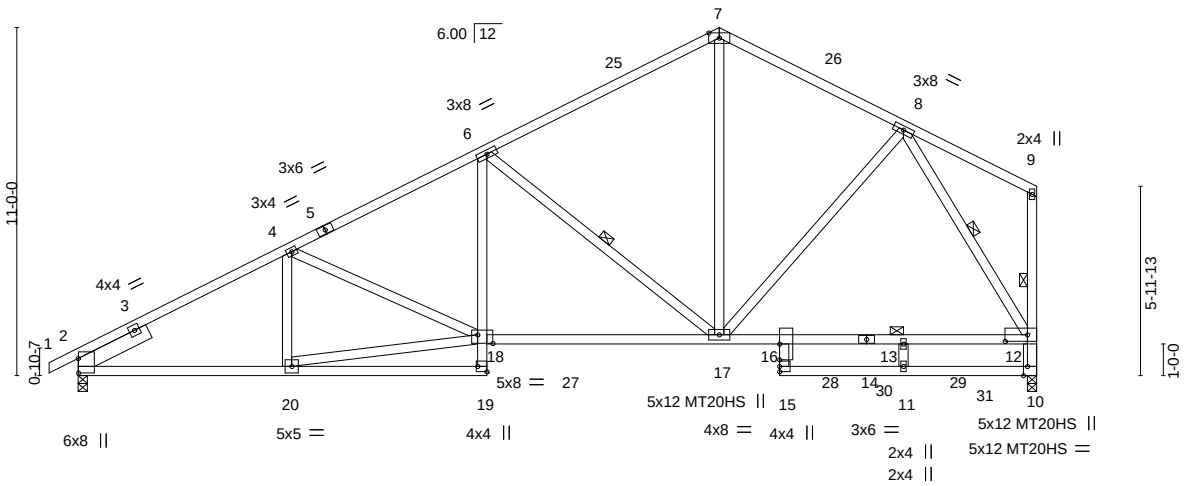


6-7-4 | 12-11-0 | 20-3-2 | 22-2-0 | 26-1-0 | 30-3-8
6-7-4 | 6-3-12 | 7-4-2 | 1-10-14 | 3-11-0 | 4-2-8

Plate Offsets (X,Y)-- [2:0-5-8,0-0-2], [10:0-3-8,Edge], [12:0-8-8,0-2-8], [16:0-6-0,0-0-0], [18:0-5-12,0-3-4], [19:Edge,0-3-8]

| **LOADING** (psf) | | **SPACING-** 2-0-0 | **CSI.** | | **DEFL.** | in | (loc) | l/defl | L/d | **PLATES** | **GRIP** |
|---|---|---|---|---|---|---|---|---|---|---|---|
| TCLL | 25.0 | Plate Grip DOL 1.15 | TC | 0.74 | Vert(LL) | -0.24 | 13-16 | >999 | 240 | MT20 | 197/144 |
| TCDL | 10.0 | Lumber DOL 1.15 | BC | 0.92 | Vert(CT) | -0.32 | 13-16 | >999 | 180 | MT20HS | 148/108 |
| BCLL | 0.0 * | Rep Stress Incr YES | WB | 0.45 | Horz(CT) | 0.08 | 10 | n/a | n/a | | |
| BCDL | 10.0 | Code IRC2018/TPI2014 | Matrix-AS | | | | | | | Weight: 161 lb | FT = 20% |

**LUMBER-**
TOP CHORD 2x4 SPF No.2
BOT CHORD 2x4 SPF No.2
WEBS 2x4 SPF No.2
SLIDER Left 2x6 SPF No.2 2-6-0

**BRACING-**
TOP CHORD Structural wood sheathing directly applied, except end verticals.
BOT CHORD Rigid ceiling directly applied.
WEBS 1 Row at midpt 6-17, 9-10, 8-12
JOINTS 1 Brace at Jt(s): 13

**REACTIONS.** (size) 2=0-3-8, 10=0-3-8
Max Horz 2=273(LC 11)
Max Uplift 2=-151(LC 12), 10=-91(LC 12)
Max Grav 2=1502(LC 2), 10=1618(LC 2)

**FORCES.** (lb) - Max. Comp./Max. Ten. - All forces 250 (lb) or less except when shown.
TOP CHORD 2-4=-2283/224, 4-6=-2157/248, 6-7=-1324/207, 7-8=-1292/208, 10-12=-1458/160
BOT CHORD 2-20=-295/1992, 6-18=-9/600, 17-18=-274/1933, 16-17=-154/753, 13-16=-236/580, 12-13=-236/580, 11-15=0/523, 10-11=0/523
WEBS 18-20=-273/1881, 6-17=-1045/259, 7-17=-41/721, 8-17=-8/560, 8-12=-1444/181

**NOTES-**
1) Unbalanced roof live loads have been considered for this design.
2) Wind: ASCE 7-16; Vult=115mph (3-second gust) Vasd=91mph; TCDL=6.0psf; BCDL=6.0psf; h=15ft; Cat. II; Exp C; Enclosed; MWFRS (envelope) gable end zone and C-C Exterior(2E) -0-11-0 to 2-1-0, Interior(1) 2-1-0 to 20-3-2, Exterior(2R) 20-3-2 to 23-3-2, Interior(1) 23-3-2 to 30-1-12 zone; cantilever left and right exposed ; end vertical left and right exposed;C-C for members and forces & MWFRS for reactions shown; Lumber DOL=1.60 plate grip DOL=1.60
3) All plates are MT20 plates unless otherwise indicated.
4) This truss has been designed for a 10.0 psf bottom chord live load nonconcurrent with any other live loads.
5) * This truss has been designed for a live load of 20.0psf on the bottom chord in all areas where a rectangle 3-6-0 tall by 2-0-0 wide will fit between the bottom chord and any other members, with BCDL = 10.0psf.
6) Provide mechanical connection (by others) of truss to bearing plate capable of withstanding 100 lb uplift at joint(s) 10 except (jt=lb) 2=151.
7) This truss is designed in accordance with the 2018 International Residential Code sections R502.11.1 and R802.10.2 and referenced standard ANSI/TPI 1.
8) This truss design requires that a minimum of 7/16" structural wood sheathing be applied directly to the top chord and 1/2" gypsum sheetrock be applied directly to the bottom chord.


February 5,2021



MiTek
16023 Swingley Ridge Rd
Chesterfield, MO 63017

| Job | Truss | Truss Type | Qty | Ply | Summit/100 Stoney |
|---|---|---|---|---|---|
| 2623880 | C3 | Roof Special | 4 | 1 | I44681430 |

Job Reference (optional)

RELEASE FOR CONSTRUCTION
AS NOTED ON PLANS REVIEW
DEVELOPMENT SERVICES
LEE'S SUMMIT, MISSOURI
02/11/2021

Builders FirstSource (Valley Center), Valley Center, KS - 67147, 8.240 s Mar 9 2020 MiTek Industries, Inc. Thu Feb 4 15:19:29 2021 Page 1
ID:VPVqvFnP0P0b1j2tZrlOqezdKbx-rNa6T4SCRk9g6LTIVO8QXbrLA9Lq5fcLn?mbSYzoU2S

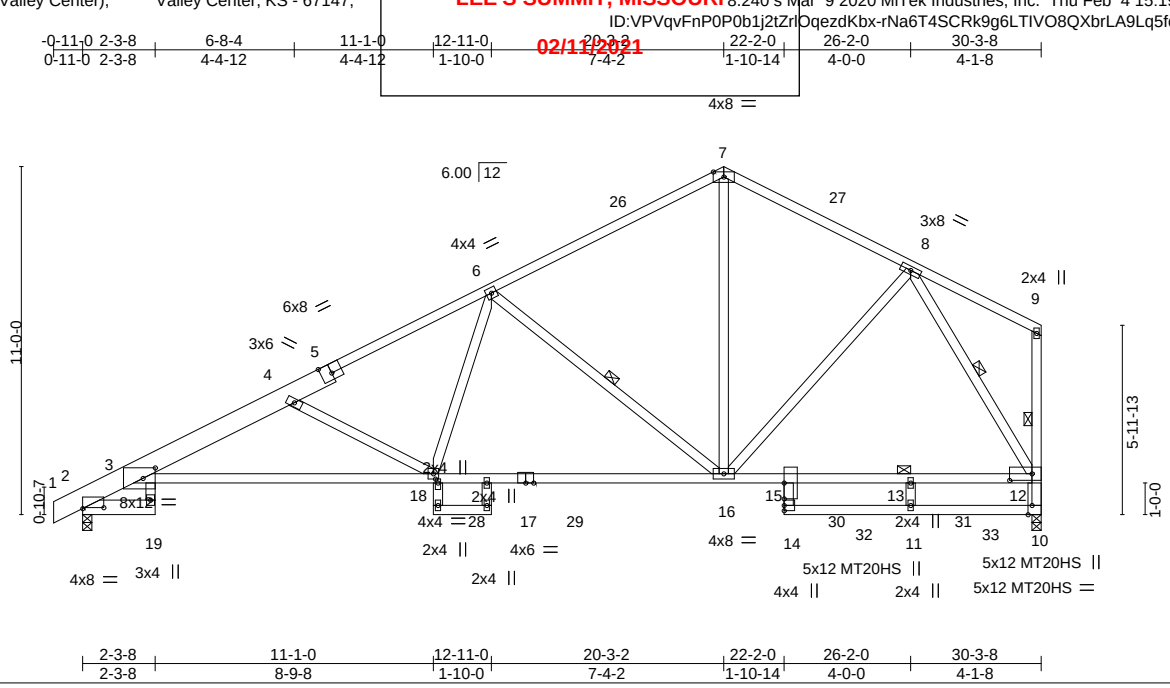


Plate Offsets (X,Y)-- [2:0-8-0,0-0-6], [3:0-4-10,0-4-0], [5:0-4-0,Edge], [10:0-3-8,Edge], [12:0-8-8,0-2-8], [15:0-6-0,0-0-0], [18:0-1-8,0-1-0]

| LOADING (psf) | | SPACING- 2-0-0 | | CSI. | | DEFL. | in | (loc) | l/defl | L/d | PLATES | GRIP |
|---|---|---|---|---|---|---|---|---|---|---|---|---|
| TCLL | 25.0 | Plate Grip DOL | 1.15 | TC | 0.62 | Vert(LL) | -0.30 | 3-18 | >999 | 240 | MT20 | 197/144 |
| TCDL | 10.0 | Lumber DOL | 1.15 | BC | 0.95 | Vert(CT) | -0.56 | 3-18 | >641 | 180 | MT20HS | 148/108 |
| BCLL | 0.0 * | Rep Stress Incr | YES | WB | 0.49 | Horz(CT) | 0.24 | 10 | n/a | n/a | | |
| BCDL | 10.0 | Code IRC2018/TPI2014 | | Matrix-AS | | | | | | | Weight: 170 lb | FT = 20% |

**LUMBER-**

TOP CHORD 2x4 SPF No.2 *Except*
1-5: 2x8 SP 2400F 2.0E
BOT CHORD 2x4 SPF No.2 *Except*
2-19: 2x6 SPF No.2, 3-17: 2x4 SPF 1650F 1.5E
WEBS 2x4 SPF No.2
OTHERS 2x4 SPF No.2

**BRACING-**

TOP CHORD Structural wood sheathing directly applied, except end verticals.
BOT CHORD Rigid ceiling directly applied.
WEBS 1 Row at midpt 6-16, 9-10, 8-12
JOINTS 1 Brace at Jt(s): 13

**REACTIONS.** (size) 2=0-3-8, 10=0-3-8
Max Horz 2=275(LC 11)
Max Uplift 2=-148(LC 12), 10=-90(LC 12)
Max Grav 2=1517(LC 2), 10=1621(LC 2)

**FORCES.** (lb) - Max. Comp./Max. Ten. - All forces 250 (lb) or less except when shown.
TOP CHORD 3-24=-823/90, 3-4=-3120/393, 4-6=-2431/261, 6-7=-1322/205, 7-8=-1298/206, 10-12=-1462/159
BOT CHORD 3-19=-41/283, 3-18=-476/3002, 16-18=-271/1896, 15-16=-153/746, 13-15=-230/572, 12-13=-230/572, 11-14=0/512, 10-11=0/512
WEBS 4-18=-1009/305, 6-18=-24/794, 6-16=-1003/260, 7-16=-40/713, 8-16=-7/570, 8-12=-1447/180

**NOTES-**

1) Unbalanced roof live loads have been considered for this design.
2) Wind: ASCE 7-16; Vult=115mph (3-second gust) Vasd=91mph; TCDL=6.0psf; BCDL=6.0psf; h=15ft; Cat. II; Exp C; Enclosed; MWFRS (envelope) gable end zone and C-C Exterior(2E) -0-11-0 to 1-9-11, Interior(1) 1-9-11 to 20-3-2, Exterior(2R) 20-3-2 to 23-3-2, Interior(1) 23-3-2 to 30-1-12 zone; cantilever left and right exposed ; end vertical left and right exposed;C-C for members and forces & MWFRS for reactions shown; Lumber DOL=1.60 plate grip DOL=1.60
3) All plates are MT20 plates unless otherwise indicated.
4) This truss has been designed for a 10.0 psf bottom chord live load nonconcurrent with any other live loads.
5) * This truss has been designed for a live load of 20.0psf on the bottom chord in all areas where a rectangle 3-6-0 tall by 2-0-0 wide will fit between the bottom chord and any other members, with BCDL = 10.0psf.
6) Provide mechanical connection (by others) of truss to bearing plate capable of withstanding 100 lb uplift at joint(s) 10 except (jt=lb) 2=148.
7) This truss is designed in accordance with the 2018 International Residential Code sections R502.11.1 and R802.10.2 and referenced standard ANSI/TPI 1.
8) This truss design requires that a minimum of 7/16" structural wood sheathing be applied directly to the top chord and 1/2" gypsum sheetrock be applied directly to the bottom chord.

STATE OF MISSOURI
SCOTT M. SEVIER
NUMBER
PE-2001018807
PROFESSIONAL ENGINEER

February 5,2021



MiTek
16023 Swingley Ridge Rd
Chesterfield, MO 63017

| Job | Truss | Truss Type | Qty | Ply | Summit/100 Stoney |
|---|---|---|---|---|---|
| 2623880 | C4 | GABLE | 1 | 1 | I44681431 |

Job Reference (optional)

Builders FirstSource (Valley Center), Valley Center, KS - 67147, 8.240 s Mar 9 2020 MiTek Industries, Inc. Thu Feb 4 15:19:31 2021 Page 1

ID:VPVqvFnP0P0b1j2tZrlOqezdKbx-olittlTSzLPOMfdgdpBuc0xoiyEaZeTeFIFiXQzoU2Q

**RELEASE FOR CONSTRUCTION**
**AS NOTED ON PLANS REVIEW**
**DEVELOPMENT SERVICES**
**LEE'S SUMMIT, MISSOURI**
**02/11/2021**

-0-11-0 | 20-3-2 | 30-3-8
0-11-0 | 20-3-2 | 10-0-6

Scale = 1:64.7

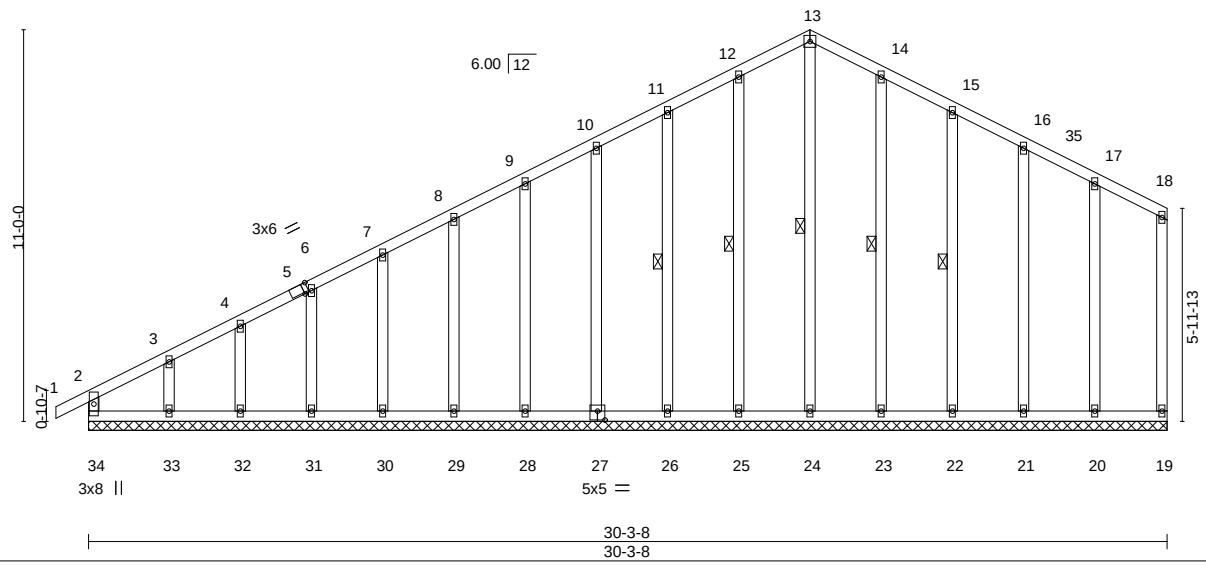


Plate Offsets (X,Y)-- [5:0-1-9,Edge], [27:0-2-8,0-3-0]

| LOADING (psf) | | SPACING- | 2-0-0 | CSI. | | DEFL. | in | (loc) | l/defl | L/d | PLATES | GRIP |
|---|---|---|---|---|---|---|---|---|---|---|---|---|
| TCLL | 25.0 | Plate Grip DOL | 1.15 | TC | 0.17 | Vert(LL) | -0.00 | 1 | n/r | 120 | MT20 | 197/144 |
| TCDL | 10.0 | Lumber DOL | 1.15 | BC | 0.10 | Vert(CT) | -0.00 | 1 | n/r | 120 | | |
| BCLL | 0.0 * | Rep Stress Incr | YES | WB | 0.15 | Horz(CT) | -0.00 | 19 | n/a | n/a | | |
| BCDL | 10.0 | Code IRC2018/TPI2014 | | Matrix-R | | | | | | | Weight: 186 lb | FT = 20% |

**LUMBER-**

| | |
|---|---|
| TOP CHORD | 2x4 SPF No.2 |
| BOT CHORD | 2x4 SPF No.2 |
| WEBS | 2x4 SPF No.2 |
| OTHERS | 2x4 SPF No.2 |

**BRACING-**

| | |
|---|---|
| TOP CHORD | Structural wood sheathing directly applied or 6-0-0 oc purlins, except end verticals. |
| BOT CHORD | Rigid ceiling directly applied or 10-0-0 oc bracing. |
| WEBS | 1 Row at midpt 13-24, 12-25, 11-26, 14-23, 15-22 |

**REACTIONS.** All bearings 30-3-8.
(lb) - Max Horz 34=279(LC 9)
Max Uplift All uplift 100 lb or less at joint(s) 19, 34, 24, 25, 26, 27, 28, 29, 30, 31, 32, 23, 22, 21, 20 except 33=-149(LC 12)
Max Grav All reactions 250 lb or less at joint(s) 19, 34, 24, 25, 26, 27, 28, 29, 30, 31, 32, 33, 23, 22, 21, 20

**FORCES.** (lb) - Max. Comp./Max. Ten. - All forces 250 (lb) or less except when shown.
TOP CHORD 2-3=-258/158, 11-12=-150/262, 12-13=-164/303, 13-14=-164/303, 14-15=-150/262

**NOTES-**

1) Unbalanced roof live loads have been considered for this design.
2) Wind: ASCE 7-16; Vult=115mph (3-second gust) Vasd=91mph; TCDL=6.0psf; BCDL=6.0psf; h=15ft; Cat. II; Exp C; Enclosed; MWFRS (envelope) gable end zone and C-C Corner(3E) -0-11-0 to 2-3-2, Exterior(2N) 2-3-2 to 20-3-2, Corner(3R) 20-3-2 to 23-3-2, Exterior(2N) 23-3-2 to 30-1-12 zone; cantilever left and right exposed ; end vertical left and right exposed;C-C for members and forces & MWFRS for reactions shown; Lumber DOL=1.60 plate grip DOL=1.60
3) Truss designed for wind loads in the plane of the truss only. For studs exposed to wind (normal to the face), see Standard Industry Gable End Details as applicable, or consult qualified building designer as per ANSI/TPI 1.
4) All plates are 2x4 MT20 unless otherwise indicated.
5) Gable requires continuous bottom chord bearing.
6) Truss to be fully sheathed from one face or securely braced against lateral movement (i.e. diagonal web).
7) Gable studs spaced at 2-0-0 oc.
8) This truss has been designed for a 10.0 psf bottom chord live load nonconcurrent with any other live loads.
9) * This truss has been designed for a live load of 20.0psf on the bottom chord in all areas where a rectangle 3-6-0 tall by 2-0-0 wide will fit between the bottom chord and any other members.
10) Provide mechanical connection (by others) of truss to bearing plate capable of withstanding 100 lb uplift at joint(s) 19, 34, 24, 25, 26, 27, 28, 29, 30, 31, 32, 23, 22, 21, 20 except (jt=lb) 33=149.
11) This truss is designed in accordance with the 2018 International Residential Code sections R502.11.1 and R802.10.2 and referenced standard ANSI/TPI 1.


February 5,2021




MiTek
16023 Swingley Ridge Rd
Chesterfield, MO 63017

| Job | Truss | Truss Type | Qty | Ply | Summit/100 Stoney |
|---|---|---|---|---|---|
| 2623880 | D1 | Hip Girder | 1 | 1 | I44681432 |
| | | | | | Job Reference (optional) |

**RELEASE FOR CONSTRUCTION**
**AS NOTED ON PLANS REVIEW**
**DEVELOPMENT SERVICES**
**LEE'S SUMMIT, MISSOURI**
**02/11/2021**

Builders FirstSource (Valley Center), Valley Center, KS - 67147, 8.240 s Mar 9 2020 MiTek Industries, Inc. Thu Feb 4 15:19:33 2021 Page 1
ID:VPVqvFnP0P0b1j2tZrlOqezdKbx-k8pdIRVjVzf6byn3kEDMhR07UmtH1YkxickobJzoU2O

-0-11-0 | 2-0-0 | 6-0-0 | 10-0-0 | 12-0-0 | 12-11-0
0-11-0 | 2-0-0 | 4-0-0 | 4-0-0 | 2-0-0 | 0-11-0

Scale = 1:23.7

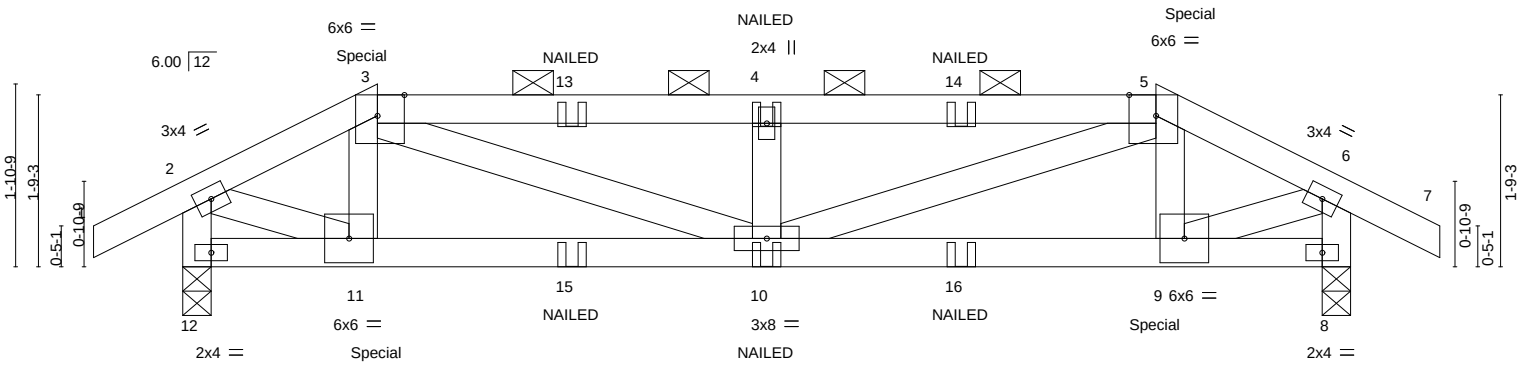


2-0-0 | 6-0-0 | 10-0-0 | 12-0-0
2-0-0 | 4-0-0 | 4-0-0 | 2-0-0

Plate Offsets (X,Y)-- [3:0-3-5,Edge], [5:0-3-5,Edge]

| **LOADING** (psf) | | **SPACING-** 2-0-0 | **CSI.** | | **DEFL.** in (loc) l/defl L/d | **PLATES** | **GRIP** |
|---|---|---|---|---|---|---|---|
| TCLL | 25.0 | Plate Grip DOL 1.15 | TC | 0.21 | Vert(LL) 0.05 10 >999 240 | MT20 | 197/144 |
| TCDL | 10.0 | Lumber DOL 1.15 | BC | 0.21 | Vert(CT) -0.05 10 >999 180 | | |
| BCLL | 0.0 * | Rep Stress Incr NO | WB | 0.16 | Horz(CT) -0.01 8 n/a n/a | | |
| BCDL | 10.0 | Code IRC2018/TPI2014 | Matrix-MS | | | Weight: 48 lb | FT = 20% |

**LUMBER-**
TOP CHORD 2x4 SPF No.2
BOT CHORD 2x4 SPF No.2
WEBS 2x4 SPF No.2

**BRACING-**
TOP CHORD Structural wood sheathing directly applied or 5-11-8 oc purlins, except end verticals, and 2-0-0 oc purlins (5-2-3 max.): 3-5.
BOT CHORD Rigid ceiling directly applied or 7-1-5 oc bracing.

**REACTIONS.** (size) 12=0-3-8, 8=0-3-8
Max Horz 12=38(LC 7)
Max Uplift 12=-598(LC 8), 8=-598(LC 9)
Max Grav 12=852(LC 38), 8=852(LC 37)

**FORCES.** (lb) - Max. Comp./Max. Ten. - All forces 250 (lb) or less except when shown.
TOP CHORD 2-3=-991/747, 3-4=-1247/808, 4-5=-1247/808, 5-6=-991/747, 2-12=-830/585, 6-8=-830/585
BOT CHORD 10-11=-694/876, 9-10=-683/875
WEBS 3-11=-131/355, 3-10=-121/584, 4-10=-332/132, 5-10=-121/584, 5-9=-131/356, 2-11=-661/912, 6-9=-662/912

**NOTES-**
1) Unbalanced roof live loads have been considered for this design.
2) Wind: ASCE 7-16; Vult=115mph (3-second gust) Vasd=91mph; TCDL=6.0psf; BCDL=6.0psf; h=15ft; Cat. II; Exp C; Enclosed; MWFRS (envelope) gable end zone; cantilever left and right exposed ; end vertical left and right exposed; Lumber DOL=1.60 plate grip DOL=1.60
3) Provide adequate drainage to prevent water ponding.
4) This truss has been designed for a 10.0 psf bottom chord live load nonconcurrent with any other live loads.
5) * This truss has been designed for a live load of 20.0psf on the bottom chord in all areas where a rectangle 3-6-0 tall by 2-0-0 wide will fit between the bottom chord and any other members.
6) Bearing at joint(s) 12, 8 considers parallel to grain value using ANSI/TPI 1 angle to grain formula. Building designer should verify capacity of bearing surface.
7) Provide mechanical connection (by others) of truss to bearing plate capable of withstanding 100 lb uplift at joint(s) except (jt=lb) 12=598, 8=598.
8) This truss is designed in accordance with the 2018 International Residential Code sections R502.11.1 and R802.10.2 and referenced standard ANSI/TPI 1.
9) Graphical purlin representation does not depict the size or the orientation of the purlin along the top and/or bottom chord.
10) "NAILED" indicates 3-10d (0.148"x3") or 3-12d (0.148"x3.25") toe-nails per NDS guidlines.
11) Hanger(s) or other connection device(s) shall be provided sufficient to support concentrated load(s) 4 lb down and 549 lb up at 2-0-0, and 4 lb down and 549 lb up at 10-0-0 on top chord, and 557 lb down and 0 lb up at 2-0-0, and 557 lb down and 0 lb up at 10-0-0 on bottom chord. The design/selection of such connection device(s) is the responsibility of others.
12) In the LOAD CASE(S) section, loads applied to the face of the truss are noted as front (F) or back (B).

**LOAD CASE(S)** Standard

STATE OF MISSOURI
SCOTT M. SEVIER
NUMBER PE-2001018807
PROFESSIONAL ENGINEER

February 5,2021

Continued on page 2



MiTek
16023 Swingley Ridge Rd
Chesterfield, MO 63017

RELEASE FOR CONSTRUCTION
AS NOTED ON PLANS REVIEW
DEVELOPMENT SERVICES
LEE'S SUMMIT, MISSOURI
02/11/2021

**LOAD CASE(S)** Standard

1) Dead + Roof Live (balanced): Lumber Increase=1.15, Plate Increase=1.15
   Uniform Loads (plf)
   Vert: 1-2=-70, 2-3=-70, 3-5=-70, 5-6=-70, 6-7=-70, 8-12=-20
   Concentrated Loads (lb)
   Vert: 11=0(F) 10=1(F) 9=0(F) 15=1(F) 16=1(F)

| Job | Truss | Truss Type | Qty | Ply | Summit/100 Stoney |
|---|---|---|---|---|---|
| 2623880 | D2 | Hip | 1 | 1 | I44681433 |

Job Reference (optional)

RELEASE FOR CONSTRUCTION
AS NOTED ON PLANS REVIEW
DEVELOPMENT SERVICES
LEE'S SUMMIT, MISSOURI
02/11/2021

Builders FirstSource (Valley Center), Valley Center, KS - 67147,

8.240 s Mar 9 2020 MiTek Industries, Inc. Thu Feb 4 15:19:34 2021 Page 1
ID:VPVqvFnP0P0b1j2tZrIOqezdKbx-CKN?WnVLFGnzD6MFIykbEeZIrADom1z5xGTM8lzoU2N

| -0-11-0 | 4-0-0 | 8-0-0 | 12-0-0 | 12-11-0 |
|---|---|---|---|---|
| 0-11-0 | 4-0-0 | 4-0-0 | 4-0-0 | 0-11-0 |

Scale = 1:22.9

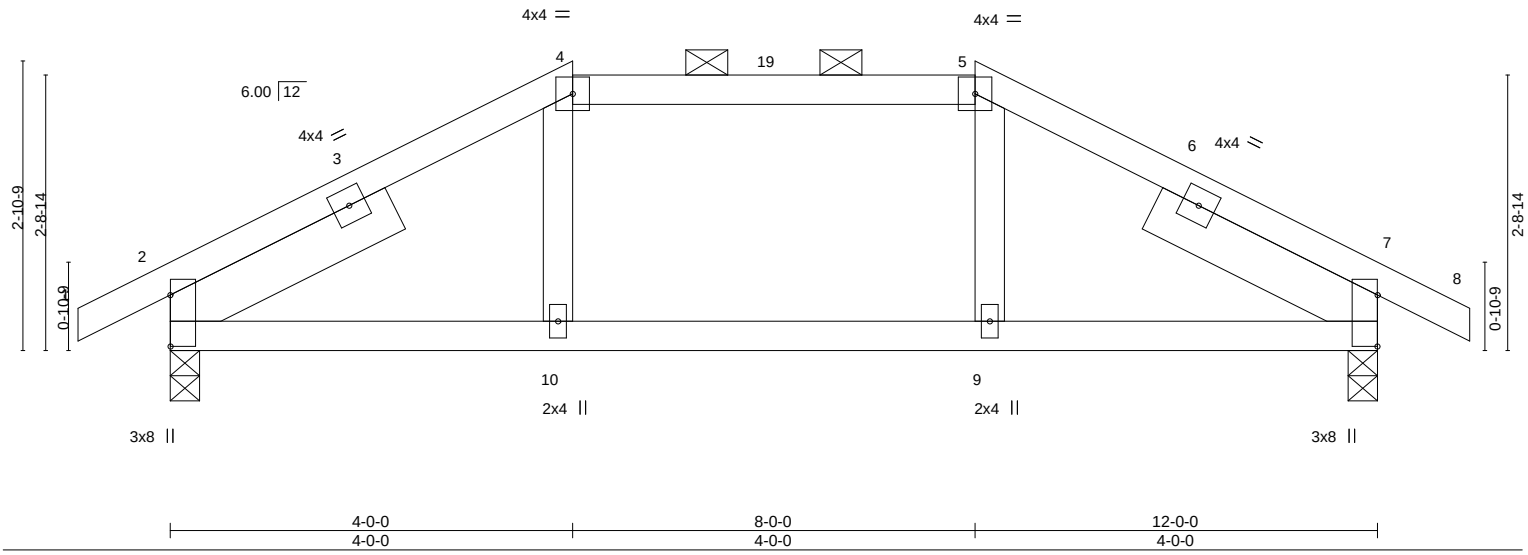


Plate Offsets (X,Y)-- [2:Edge,0-0-0], [7:Edge,0-0-0]

| LOADING (psf) | | SPACING- 2-0-0 | | CSI. | | DEFL. in (loc) l/defl L/d | | | | | PLATES | GRIP |
|---|---|---|---|---|---|---|---|---|---|---|---|---|
| TCLL | 25.0 | Plate Grip DOL | 1.15 | TC | 0.24 | Vert(LL) | -0.04 | 9 | >999 | 240 | MT20 | 197/144 |
| TCDL | 10.0 | Lumber DOL | 1.15 | BC | 0.26 | Vert(CT) | -0.06 | 9 | >999 | 180 | | |
| BCLL | 0.0 * | Rep Stress Incr | YES | WB | 0.03 | Horz(CT) | 0.02 | 7 | n/a | n/a | | |
| BCDL | 10.0 | Code IRC2018/TPI2014 | | Matrix-AS | | | | | | | Weight: 45 lb | FT = 20% |

**LUMBER-**
TOP CHORD 2x4 SPF No.2
BOT CHORD 2x4 SPF No.2
WEBS 2x4 SPF No.2
SLIDER Left 2x6 SPF No.2 2-6-0, Right 2x6 SPF No.2 2-6-0

**BRACING-**
TOP CHORD Structural wood sheathing directly applied, except 2-0-0 oc purlins (6-0-0 max.): 4-5.
BOT CHORD Rigid ceiling directly applied.

**REACTIONS.** (size) 2=0-3-8, 7=0-3-8
Max Horz 2=38(LC 16)
Max Uplift 2=-66(LC 12), 7=-66(LC 13)
Max Grav 2=604(LC 1), 7=604(LC 1)

**FORCES.** (lb) - Max. Comp./Max. Ten. - All forces 250 (lb) or less except when shown.
TOP CHORD 2-4=-680/195, 4-5=-584/198, 5-7=-680/195
BOT CHORD 2-10=-89/587, 9-10=-91/584, 7-9=-88/587

**NOTES-**
1) Unbalanced roof live loads have been considered for this design.
2) Wind: ASCE 7-16; Vult=115mph (3-second gust) Vasd=91mph; TCDL=6.0psf; BCDL=6.0psf; h=15ft; Cat. II; Exp C; Enclosed; MWFRS (envelope) gable end zone and C-C Exterior(2E) -0-11-0 to 2-1-0, Interior(1) 2-1-0 to 4-0-0, Exterior(2E) 4-0-0 to 8-0-0, Exterior(2R) 8-0-0 to 12-0-0, Interior(1) 12-0-0 to 12-11-0 zone; cantilever left and right exposed ; end vertical left and right exposed;C-C for members and forces & MWFRS for reactions shown; Lumber DOL=1.60 plate grip DOL=1.60
3) Provide adequate drainage to prevent water ponding.
4) This truss has been designed for a 10.0 psf bottom chord live load nonconcurrent with any other live loads.
5) * This truss has been designed for a live load of 20.0psf on the bottom chord in all areas where a rectangle 3-6-0 tall by 2-0-0 wide will fit between the bottom chord and any other members.
6) Provide mechanical connection (by others) of truss to bearing plate capable of withstanding 100 lb uplift at joint(s) 2, 7.
7) This truss is designed in accordance with the 2018 International Residential Code sections R502.11.1 and R802.10.2 and referenced standard ANSI/TPI 1.
8) This truss design requires that a minimum of 7/16" structural wood sheathing be applied directly to the top chord and 1/2" gypsum sheetrock be applied directly to the bottom chord.
9) Graphical purlin representation does not depict the size or the orientation of the purlin along the top and/or bottom chord.


February 5,2021



MiTek
16023 Swingley Ridge Rd
Chesterfield, MO 63017

| Job | Truss | Truss Type | Qty | Ply | Summit/100 Stoney |
|---|---|---|---|---|---|
| 2623880 | D3 | Common | 3 | 1 | I44681434 |

Job Reference (optional)

RELEASE FOR CONSTRUCTION
AS NOTED ON PLANS REVIEW
DEVELOPMENT SERVICES
LEE'S SUMMIT, MISSOURI
02/11/2021

Builders FirstSource (Valley Center), Valley Center, KS - 67147, 8.240 s Mar 9 2020 MiTek Industries, Inc. Thu Feb 4 15:19:35 2021 Page 1
ID:VPVqvFnP0P0b1j2tZrlOqezdKbx-gXxOj7Wz0awpqGxSsfFqms5SkaYwVUvEAwDvgCzoU2M

-0-11-0 / 0-11-0 | 6-0-0 / 6-0-0 | 12-0-0 / 6-0-0 | 12-11-0 / 0-11-0

Scale = 1:25.6

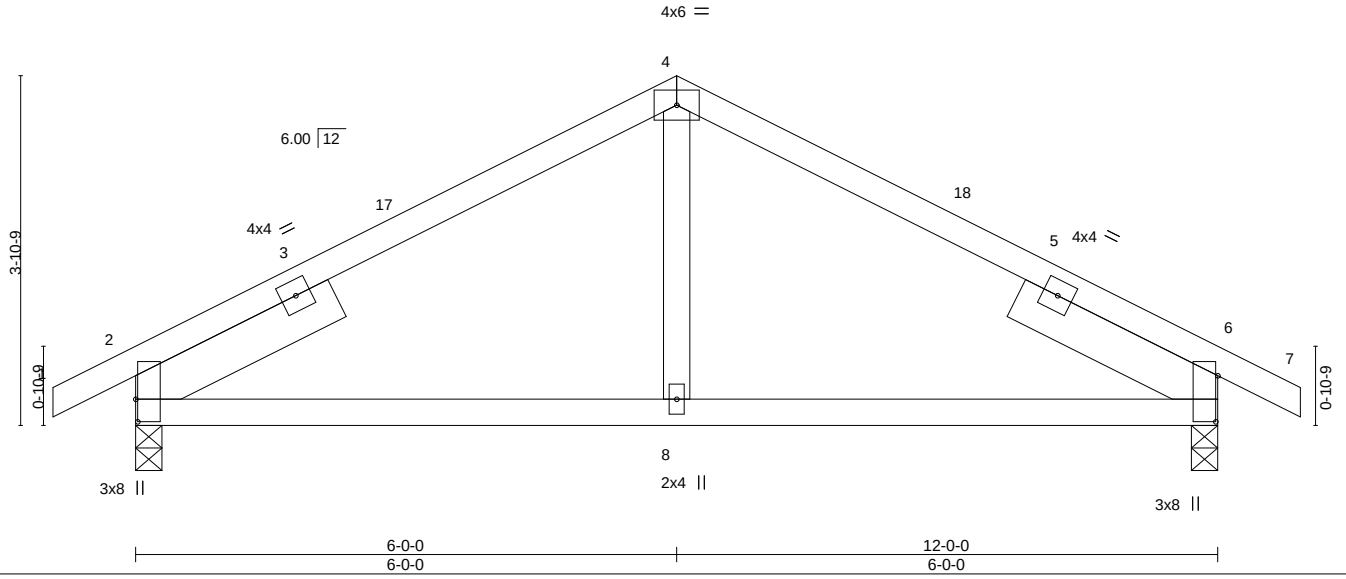


Plate Offsets (X,Y)-- [2:0-3-0,0-0-4], [6:0-6-2,0-0-4]

| LOADING (psf) | | SPACING- 2-0-0 | | CSI. | | DEFL. | in | (loc) | l/defl | L/d | PLATES | GRIP |
|---|---|---|---|---|---|---|---|---|---|---|---|---|
| TCLL | 25.0 | Plate Grip DOL | 1.15 | TC | 0.29 | Vert(LL) | -0.04 | 8-15 | >999 | 240 | MT20 | 197/144 |
| TCDL | 10.0 | Lumber DOL | 1.15 | BC | 0.26 | Vert(CT) | -0.06 | 8-15 | >999 | 180 | | |
| BCLL | 0.0 * | Rep Stress Incr | YES | WB | 0.05 | Horz(CT) | 0.02 | 2 | n/a | n/a | | |
| BCDL | 10.0 | Code IRC2018/TPI2014 | | Matrix-AS | | | | | | | Weight: 44 lb | FT = 20% |

**LUMBER-**
TOP CHORD 2x4 SPF No.2
BOT CHORD 2x4 SPF No.2
WEBS 2x4 SPF No.2
SLIDER Left 2x6 SPF No.2 2-6-0, Right 2x6 SPF No.2 2-6-0

**BRACING-**
TOP CHORD Structural wood sheathing directly applied.
BOT CHORD Rigid ceiling directly applied.

**REACTIONS.** (size) 2=0-3-8, 6=0-3-8
Max Horz 2=55(LC 12)
Max Uplift 2=-62(LC 12), 6=-62(LC 13)
Max Grav 2=604(LC 1), 6=604(LC 1)

**FORCES.** (lb) - Max. Comp./Max. Ten. - All forces 250 (lb) or less except when shown.
TOP CHORD 2-4=-579/208, 4-6=-579/208
BOT CHORD 2-8=-68/506, 6-8=-68/506

**NOTES-**
1) Unbalanced roof live loads have been considered for this design.
2) Wind: ASCE 7-16; Vult=115mph (3-second gust) Vasd=91mph; TCDL=6.0psf; BCDL=6.0psf; h=15ft; Cat. II; Exp C; Enclosed; MWFRS (envelope) gable end zone and C-C Exterior(2E) -0-11-0 to 2-1-0, Interior(1) 2-1-0 to 6-0-0, Exterior(2R) 6-0-0 to 9-0-0, Interior(1) 9-0-0 to 12-11-0 zone; cantilever left and right exposed ; end vertical left and right exposed;C-C for members and forces & MWFRS for reactions shown; Lumber DOL=1.60 plate grip DOL=1.60
3) This truss has been designed for a 10.0 psf bottom chord live load nonconcurrent with any other live loads.
4) * This truss has been designed for a live load of 20.0psf on the bottom chord in all areas where a rectangle 3-6-0 tall by 2-0-0 wide will fit between the bottom chord and any other members.
5) Provide mechanical connection (by others) of truss to bearing plate capable of withstanding 100 lb uplift at joint(s) 2, 6.
6) This truss is designed in accordance with the 2018 International Residential Code sections R502.11.1 and R802.10.2 and referenced standard ANSI/TPI 1.
7) This truss design requires that a minimum of 7/16" structural wood sheathing be applied directly to the top chord and 1/2" gypsum sheetrock be applied directly to the bottom chord.


February 5,2021



MiTek
16023 Swingley Ridge Rd
Chesterfield, MO 63017

| Job | Truss | Truss Type | Qty | Ply | Summit/100 Stoney |
|---|---|---|---|---|---|
| 2623880 | E3 | GABLE | 1 | 1 | I44681435 |

Job Reference (optional)

RELEASE FOR CONSTRUCTION
AS NOTED ON PLANS REVIEW
DEVELOPMENT SERVICES
LEE'S SUMMIT, MISSOURI
02/11/2021

Builders FirstSource (Valley Center), Valley Center, KS - 67147, 8.240 s Mar 9 2020 MiTek Industries, Inc. Thu Feb 4 15:19:36 2021 Page 1
ID:VPVqvFnP0P0b1j2tZrlOqezdKbx-8jVmxTXbnu2gSQWeQMm3J3egFzyOEx8NOayTCezoU2L

5-10-15
5-10-15

Scale = 1:20.4

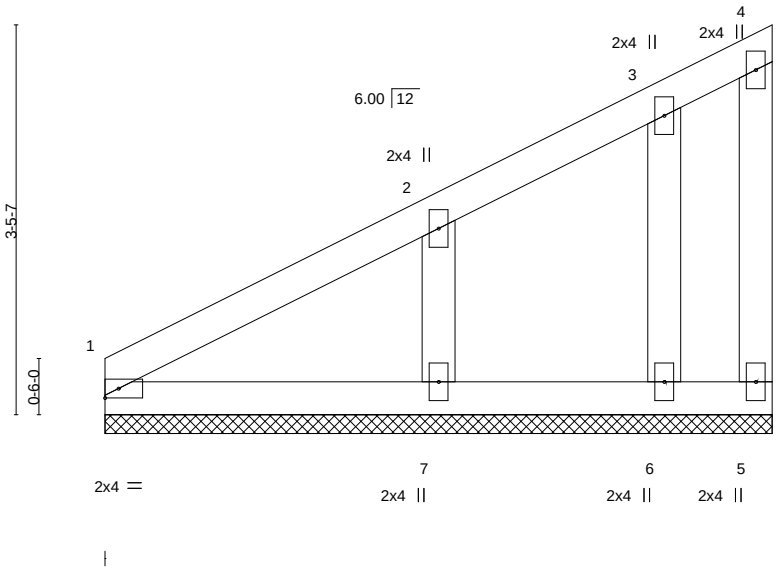


| LOADING (psf) | | SPACING- | 2-0-0 | CSI. | | DEFL. | in | (loc) | l/defl | L/d | PLATES | GRIP |
|---|---|---|---|---|---|---|---|---|---|---|---|---|
| TCLL | 25.0 | Plate Grip DOL | 1.15 | TC | 0.12 | Vert(LL) | n/a | - | n/a | 999 | MT20 | 197/144 |
| TCDL | 10.0 | Lumber DOL | 1.15 | BC | 0.06 | Vert(CT) | n/a | - | n/a | 999 | | |
| BCLL | 0.0 * | Rep Stress Incr | YES | WB | 0.05 | Horz(CT) | 0.00 | 5 | n/a | n/a | | |
| BCDL | 10.0 | Code IRC2018/TPI2014 | | Matrix-P | | | | | | | Weight: 22 lb | FT = 20% |

**LUMBER-**
TOP CHORD 2x4 SPF No.2
BOT CHORD 2x4 SPF No.2
WEBS 2x4 SPF No.2
OTHERS 2x4 SPF No.2

**BRACING-**
TOP CHORD Structural wood sheathing directly applied or 5-10-15 oc purlins, except end verticals.
BOT CHORD Rigid ceiling directly applied or 10-0-0 oc bracing.

**REACTIONS.** All bearings 5-10-15.
(lb) - Max Horz 1=115(LC 11)
Max Uplift All uplift 100 lb or less at joint(s) 5, 7, 6
Max Grav All reactions 250 lb or less at joint(s) 1, 5, 6 except 7=282(LC 1)

**FORCES.** (lb) - Max. Comp./Max. Ten. - All forces 250 (lb) or less except when shown.
TOP CHORD 1-2=-276/148
WEBS 2-7=-220/309

**NOTES-**
1) Wind: ASCE 7-16; Vult=115mph (3-second gust) Vasd=91mph; TCDL=6.0psf; BCDL=6.0psf; h=15ft; Cat. II; Exp C; Enclosed; MWFRS (envelope) gable end zone and C-C Corner(3E) 0-0-0 to 2-11-8, Exterior(2N) 2-11-8 to 5-9-3 zone; cantilever left and right exposed ; end vertical left and right exposed;C-C for members and forces & MWFRS for reactions shown; Lumber DOL=1.60 plate grip DOL=1.60
2) Truss designed for wind loads in the plane of the truss only. For studs exposed to wind (normal to the face), see Standard Industry Gable End Details as applicable, or consult qualified building designer as per ANSI/TPI 1.
3) Gable requires continuous bottom chord bearing.
4) Gable studs spaced at 2-0-0 oc.
5) This truss has been designed for a 10.0 psf bottom chord live load nonconcurrent with any other live loads.
6) * This truss has been designed for a live load of 20.0psf on the bottom chord in all areas where a rectangle 3-6-0 tall by 2-0-0 wide will fit between the bottom chord and any other members.
7) Provide mechanical connection (by others) of truss to bearing plate capable of withstanding 100 lb uplift at joint(s) 5, 7, 6.
8) This truss is designed in accordance with the 2018 International Residential Code sections R502.11.1 and R802.10.2 and referenced standard ANSI/TPI 1.

STATE OF MISSOURI
SCOTT M. SEVIER
NUMBER
PE-2001018807
PROFESSIONAL ENGINEER

February 5,2021



MiTek
16023 Swingley Ridge Rd
Chesterfield, MO 63017

| Job | Truss | Truss Type | Qty | Ply | Summit/100 Stoney |
|---|---|---|---|---|---|
| 2623880 | F1 | GABLE | 1 | 1 | I44681436 |

Job Reference (optional)

**RELEASE FOR CONSTRUCTION**
**AS NOTED ON PLANS REVIEW**
**DEVELOPMENT SERVICES**
**LEE'S SUMMIT, MISSOURI**
**02/11/2021**

Builders FirstSource (Valley Center), Valley Center, KS - 67147,

8.240 s Mar 9 2020 MiTek Industries, Inc. Thu Feb 4 15:19:37 2021 Page 1
ID:VPVqvFnP0P0b1j2tZrlOqezdKbx-cv388pYDYBAX4a5qz4IIrHAmWN75zMnXdEi0k4zoU2K

| -0-11-0 | 3-3-8 | 6-0-0 | 8-8-8 | 12-0-0 | 12-11-0 |
|---|---|---|---|---|---|
| 0-11-0 | 3-3-8 | 2-8-8 | 2-8-8 | 3-3-8 | 0-11-0 |

Scale = 1:22.9

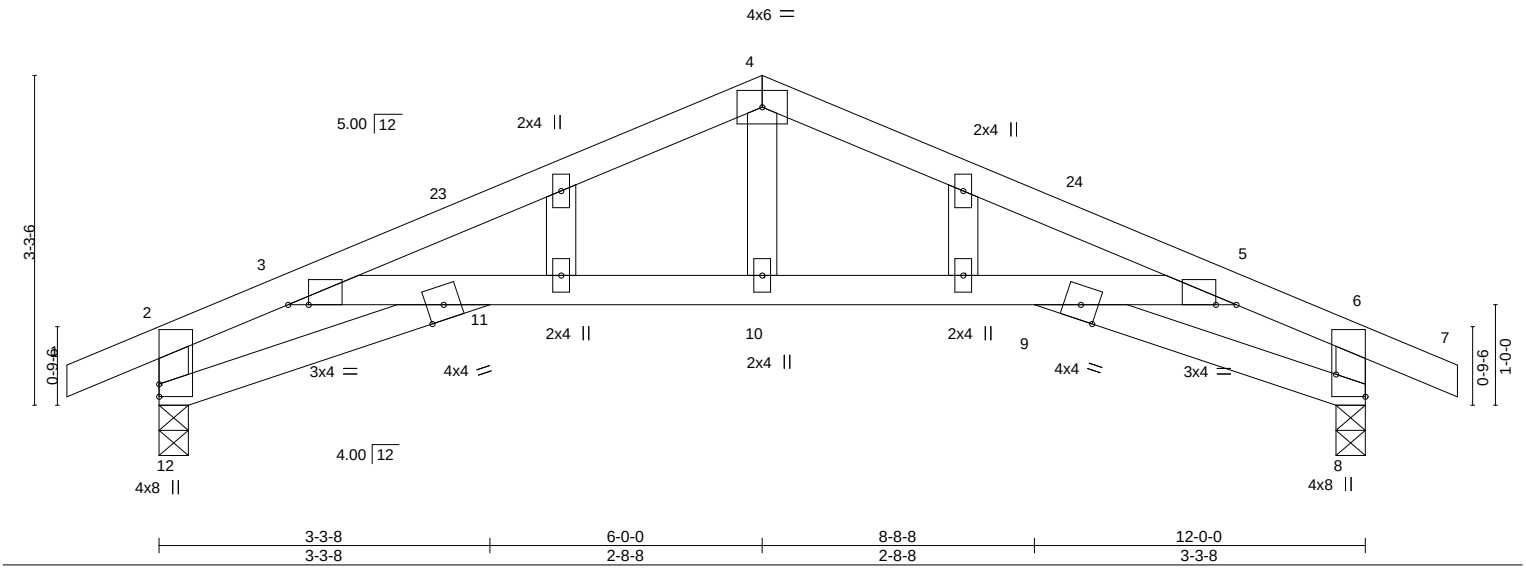


Plate Offsets (X,Y)-- [2:0-0-12,0-1-12], [3:0-2-7,Edge], [5:0-2-7,Edge], [6:0-0-12,0-1-12], [8:Edge,0-3-8], [8:0-0-9,0-1-12], [12:0-0-9,0-1-12]

| **LOADING** (psf) | | **SPACING-** 2-0-0 | **CSI.** | | **DEFL.** in (loc) l/defl L/d | **PLATES** | **GRIP** |
|---|---|---|---|---|---|---|---|
| TCLL | 25.0 | Plate Grip DOL 1.15 | TC | 0.40 | Vert(LL) -0.08 11 >999 240 | MT20 | 197/144 |
| TCDL | 10.0 | Lumber DOL 1.15 | BC | 0.73 | Vert(CT) -0.15 10-11 >923 180 | | |
| BCLL | 0.0 * | Rep Stress Incr YES | WB | 0.09 | Horz(CT) 0.11 8 n/a n/a | | |
| BCDL | 10.0 | Code IRC2018/TPI2014 | Matrix-AS | | | Weight: 41 lb | FT = 20% |

**LUMBER-**
TOP CHORD 2x4 SPF No.2
BOT CHORD 2x4 SPF No.2
WEBS 2x4 SPF No.2
OTHERS 2x4 SPF No.2

**BRACING-**
TOP CHORD Structural wood sheathing directly applied, except end verticals.
BOT CHORD Rigid ceiling directly applied. Except:
10-0-0 oc bracing: 9-10

**REACTIONS.** (size) 12=0-3-8, 8=0-3-8
Max Horz 12=28(LC 16)
Max Uplift 12=-66(LC 12), 8=-66(LC 13)
Max Grav 12=601(LC 1), 8=601(LC 1)

**FORCES.** (lb) - Max. Comp./Max. Ten. - All forces 250 (lb) or less except when shown.
TOP CHORD 2-3=-670/204, 3-4=-1039/272, 4-5=-1039/283, 5-6=-670/191, 2-12=-666/217, 6-8=-666/229
BOT CHORD 11-12=-145/495, 3-11=-63/462, 10-11=-169/941, 9-10=-169/941, 5-9=-76/462, 8-9=-102/495
WEBS 4-10=-31/379

**NOTES-**
1) Unbalanced roof live loads have been considered for this design.
2) Wind: ASCE 7-16; Vult=115mph (3-second gust) Vasd=91mph; TCDL=6.0psf; BCDL=6.0psf; h=15ft; Cat. II; Exp C; Enclosed; MWFRS (envelope) gable end zone and C-C Exterior(2E) -0-11-0 to 1-11-13, Interior(1) 1-11-13 to 6-0-0, Exterior(2R) 6-0-0 to 9-0-0, Interior(1) 9-0-0 to 12-11-0 zone; cantilever left and right exposed ; end vertical left and right exposed;C-C for members and forces & MWFRS for reactions shown; Lumber DOL=1.60 plate grip DOL=1.60
3) Truss designed for wind loads in the plane of the truss only. For studs exposed to wind (normal to the face), see Standard Industry Gable End Details as applicable, or consult qualified building designer as per ANSI/TPI 1.
4) Gable studs spaced at 2-0-0 oc.
5) This truss has been designed for a 10.0 psf bottom chord live load nonconcurrent with any other live loads.
6) * This truss has been designed for a live load of 20.0psf on the bottom chord in all areas where a rectangle 3-6-0 tall by 2-0-0 wide will fit between the bottom chord and any other members.
7) Bearing at joint(s) 12, 8 considers parallel to grain value using ANSI/TPI 1 angle to grain formula. Building designer should verify capacity of bearing surface.
8) Provide mechanical connection (by others) of truss to bearing plate capable of withstanding 100 lb uplift at joint(s) 12, 8.
9) This truss is designed in accordance with the 2018 International Residential Code sections R502.11.1 and R802.10.2 and referenced standard ANSI/TPI 1.
10) This truss design requires that a minimum of 7/16" structural wood sheathing be applied directly to the top chord and 1/2" gypsum sheetrock be applied directly to the bottom chord.

STATE OF MISSOURI
SCOTT M. SEVIER
NUMBER
PE-2001018807
PROFESSIONAL ENGINEER

February 5,2021



MiTek
16023 Swingley Ridge Rd
Chesterfield, MO 63017

| Job | Truss | Truss Type | Qty | Ply | Summit/100 Stoney |
|---|---|---|---|---|---|
| 2623880 | F2 | Roof Special | 3 | 1 | I44681437 |

Job Reference (optional)

**RELEASE FOR CONSTRUCTION**
**AS NOTED ON PLANS REVIEW**
**DEVELOPMENT SERVICES**
**LEE'S SUMMIT, MISSOURI**
**02/11/2021**

Builders FirstSource (Valley Center), Valley Center, KS - 67147,

8.240 s Mar 9 2020 MiTek Industries, Inc. Thu Feb 4 15:19:38 2021 Page 1
ID:VPVqvFnP0P0b1j2tZrlOqezdKbx-56dWL9ZrJVIOhkf1XnpXOUjyinTtip0gsuRZHWzoU2J

3-2-0 | 5-10-8 | 8-7-0 | 11-10-8
3-2-0 | 2-8-8 | 2-8-8 | 3-3-8

Scale = 1:20.4

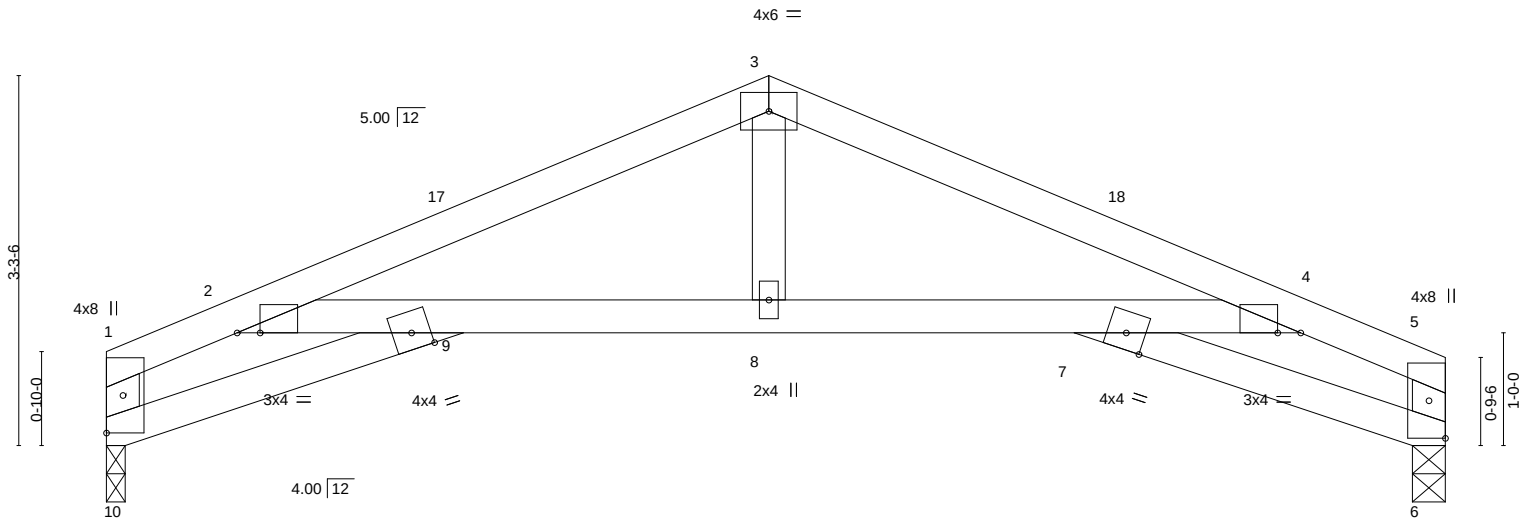


Plate Offsets (X,Y)-- [1:0-0-12,0-1-12], [2:0-2-7,0-0-0], [4:0-2-7,0-0-0], [5:0-0-12,0-1-12], [6:0-0-9,0-1-12], [10:0-0-9,0-1-12]

| **LOADING** (psf) | | **SPACING-** 2-0-0 | | **CSI.** | | **DEFL.** in (loc) l/defl L/d | | **PLATES** | **GRIP** |
|---|---|---|---|---|---|---|---|---|---|
| TCLL | 25.0 | Plate Grip DOL | 1.15 | TC | 0.38 | Vert(LL) -0.09 7 >999 240 | | MT20 | 197/144 |
| TCDL | 10.0 | Lumber DOL | 1.15 | BC | 0.76 | Vert(CT) -0.16 7-8 >881 180 | | | |
| BCLL | 0.0 * | Rep Stress Incr | YES | WB | 0.09 | Horz(CT) 0.11 6 n/a n/a | | | |
| BCDL | 10.0 | Code IRC2018/TPI2014 | | Matrix-AS | | | | Weight: 36 lb | FT = 20% |

**LUMBER-**
TOP CHORD 2x4 SPF No.2
BOT CHORD 2x4 SPF No.2
WEBS 2x4 SPF No.2

**BRACING-**
TOP CHORD Structural wood sheathing directly applied, except end verticals.
BOT CHORD Rigid ceiling directly applied. Except:
10-0-0 oc bracing: 7-8

**REACTIONS.** (size) 10=0-2-0, 6=0-3-8
Max Horz 10=-22(LC 13)
Max Uplift 10=-44(LC 12), 6=-45(LC 13)
Max Grav 10=521(LC 1), 6=521(LC 1)

**FORCES.** (lb) - Max. Comp./Max. Ten. - All forces 250 (lb) or less except when shown.
TOP CHORD 1-2=-652/206, 2-3=-1044/299, 3-4=-1042/309, 4-5=-697/208, 1-10=-580/179, 5-6=-591/189
BOT CHORD 9-10=-169/478, 2-9=-67/480, 8-9=-221/945, 7-8=-221/945, 4-7=-67/436, 6-7=-160/525
WEBS 3-8=-47/381

**NOTES-**
1) Unbalanced roof live loads have been considered for this design.
2) Wind: ASCE 7-16; Vult=115mph (3-second gust) Vasd=91mph; TCDL=6.0psf; BCDL=6.0psf; h=15ft; Cat. II; Exp C; Enclosed; MWFRS (envelope) gable end zone and C-C Exterior(2E) 0-1-12 to 3-1-12, Interior(1) 3-1-12 to 5-10-8, Exterior(2R) 5-10-8 to 8-10-8 , Interior(1) 8-10-8 to 11-8-12 zone; cantilever left and right exposed ; end vertical left and right exposed;C-C for members and forces & MWFRS for reactions shown; Lumber DOL=1.60 plate grip DOL=1.60
3) This truss has been designed for a 10.0 psf bottom chord live load nonconcurrent with any other live loads.
4) * This truss has been designed for a live load of 20.0psf on the bottom chord in all areas where a rectangle 3-6-0 tall by 2-0-0 wide will fit between the bottom chord and any other members.
5) Bearing at joint(s) 10, 6 considers parallel to grain value using ANSI/TPI 1 angle to grain formula. Building designer should verify capacity of bearing surface.
6) Provide mechanical connection (by others) of truss to bearing plate at joint(s) 10.
7) Provide mechanical connection (by others) of truss to bearing plate capable of withstanding 100 lb uplift at joint(s) 10, 6.
8) This truss is designed in accordance with the 2018 International Residential Code sections R502.11.1 and R802.10.2 and referenced standard ANSI/TPI 1.
9) This truss design requires that a minimum of 7/16" structural wood sheathing be applied directly to the top chord and 1/2" gypsum sheetrock be applied directly to the bottom chord.

STATE OF MISSOURI
SCOTT M. SEVIER
NUMBER PE-2001018807
PROFESSIONAL ENGINEER

February 5,2021




MiTek
16023 Swingley Ridge Rd
Chesterfield, MO 63017

| Job | Truss | Truss Type | Qty | Ply | Summit/100 Stoney |
|---|---|---|---|---|---|
| 2623880 | F3 | Roof Special | 1 | 1 | I44681438 |

Job Reference (optional)

**RELEASE FOR CONSTRUCTION**
**AS NOTED ON PLANS REVIEW**
**DEVELOPMENT SERVICES**
**LEE'S SUMMIT, MISSOURI**
**02/11/2021**

Builders FirstSource (Valley Center), Valley Center, KS - 67147,

8.240 s Mar 9 2020 MiTek Industries, Inc. Thu Feb 4 15:19:39 2021 Page 1
ID:VPVqvFnP0P0b1j2tZrIOqezdKbx-ZIBuZUZU4pQFJtED5VKmwiG60BoZRGHq5YB7pzzoU2I

-0-11-0 | 3-3-8 | 6-0-0 | 8-8-8 | 12-0-0 | 12-11-0
0-11-0 | 3-3-8 | 2-8-8 | 2-8-8 | 3-3-8 | 0-11-0

Scale = 1:22.9

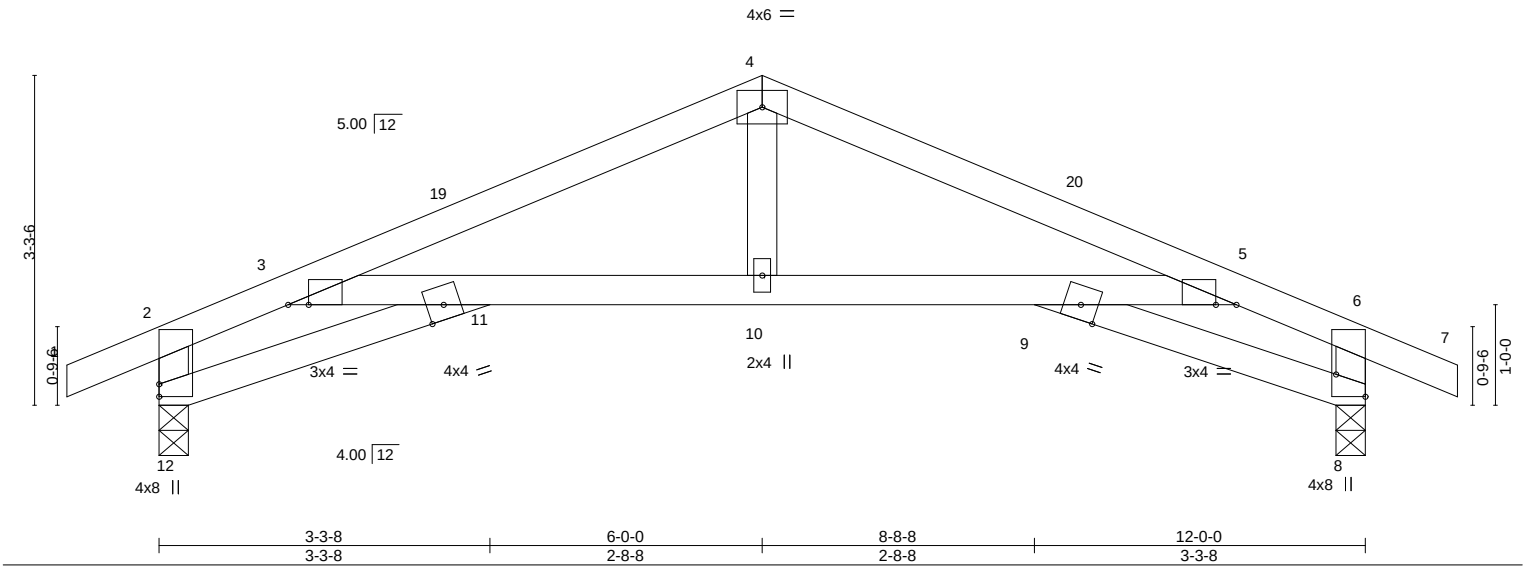


Plate Offsets (X,Y)-- [2:0-0-12,0-1-12], [3:0-2-7,Edge], [5:0-2-7,Edge], [6:0-0-12,0-1-12], [8:Edge,0-3-8], [8:0-0-9,0-1-12], [12:0-0-9,0-1-12]

| **LOADING** (psf) | | **SPACING-** 2-0-0 | **CSI.** | | **DEFL.** | in | (loc) | l/defl | L/d | **PLATES** | **GRIP** |
|---|---|---|---|---|---|---|---|---|---|---|---|
| TCLL | 25.0 | Plate Grip DOL 1.15 | TC | 0.40 | Vert(LL) | -0.08 | 11 | >999 | 240 | MT20 | 197/144 |
| TCDL | 10.0 | Lumber DOL 1.15 | BC | 0.73 | Vert(CT) | -0.15 | 10-11 | >923 | 180 | | |
| BCLL | 0.0 * | Rep Stress Incr YES | WB | 0.09 | Horz(CT) | 0.11 | 8 | n/a | n/a | | |
| BCDL | 10.0 | Code IRC2018/TPI2014 | Matrix-AS | | | | | | | Weight: 39 lb | FT = 20% |

**LUMBER-**
TOP CHORD 2x4 SPF No.2
BOT CHORD 2x4 SPF No.2
WEBS 2x4 SPF No.2

**BRACING-**
TOP CHORD Structural wood sheathing directly applied, except end verticals.
BOT CHORD Rigid ceiling directly applied. Except:
10-0-0 oc bracing: 9-10

**REACTIONS.** (size) 12=0-3-8, 8=0-3-8
Max Horz 12=-28(LC 17)
Max Uplift 12=-66(LC 12), 8=-66(LC 13)
Max Grav 12=601(LC 1), 8=601(LC 1)

**FORCES.** (lb) - Max. Comp./Max. Ten. - All forces 250 (lb) or less except when shown.
TOP CHORD 2-3=-670/204, 3-4=-1039/272, 4-5=-1039/283, 5-6=-670/191, 2-12=-666/217, 6-8=-666/229
BOT CHORD 11-12=-145/495, 3-11=-63/462, 10-11=-169/941, 9-10=-169/941, 5-9=-76/462, 8-9=-102/495
WEBS 4-10=-31/379

**NOTES-**
1) Unbalanced roof live loads have been considered for this design.
2) Wind: ASCE 7-16; Vult=115mph (3-second gust) Vasd=91mph; TCDL=6.0psf; BCDL=6.0psf; h=15ft; Cat. II; Exp C; Enclosed; MWFRS (envelope) gable end zone and C-C Exterior(2E) -0-11-0 to 1-11-13, Interior(1) 1-11-13 to 6-0-0, Exterior(2R) 6-0-0 to 9-0-0, Interior(1) 9-0-0 to 12-11-0 zone; cantilever left and right exposed ; end vertical left and right exposed;C-C for members and forces & MWFRS for reactions shown; Lumber DOL=1.60 plate grip DOL=1.60
3) This truss has been designed for a 10.0 psf bottom chord live load nonconcurrent with any other live loads.
4) * This truss has been designed for a live load of 20.0psf on the bottom chord in all areas where a rectangle 3-6-0 tall by 2-0-0 wide will fit between the bottom chord and any other members.
5) Bearing at joint(s) 12, 8 considers parallel to grain value using ANSI/TPI 1 angle to grain formula. Building designer should verify capacity of bearing surface.
6) Provide mechanical connection (by others) of truss to bearing plate capable of withstanding 100 lb uplift at joint(s) 12, 8.
7) This truss is designed in accordance with the 2018 International Residential Code sections R502.11.1 and R802.10.2 and referenced standard ANSI/TPI 1.
8) This truss design requires that a minimum of 7/16" structural wood sheathing be applied directly to the top chord and 1/2" gypsum sheetrock be applied directly to the bottom chord.

STATE OF MISSOURI
SCOTT M. SEVIER
NUMBER
PE-2001018807
PROFESSIONAL ENGINEER

February 5,2021



MiTek
16023 Swingley Ridge Rd
Chesterfield, MO 63017

| Job | Truss | Truss Type | Qty | Ply | Summit/100 Stoney |
|---|---|---|---|---|---|
| 2623880 | GR1 | Roof Special Girder | 1 | 2 | I44681439 |

Job Reference (optional)

**RELEASE FOR CONSTRUCTION**
**AS NOTED ON PLANS REVIEW**
**DEVELOPMENT SERVICES**
**LEE'S SUMMIT, MISSOURI**
**02/11/2021**

Builders FirstSource (Valley Center), Valley Center, KS - 67147, 8.240 s Mar 9 2020 MiTek Industries, Inc. Thu Feb 4 15:19:40 2021 Page 1
ID:VPVqvFnP0P0b1j2tZrlOqezdKbx-1UkHmqa6r6Y6x1pPfCr?TvoHkbAKAa6zJCwgLPzoU2H

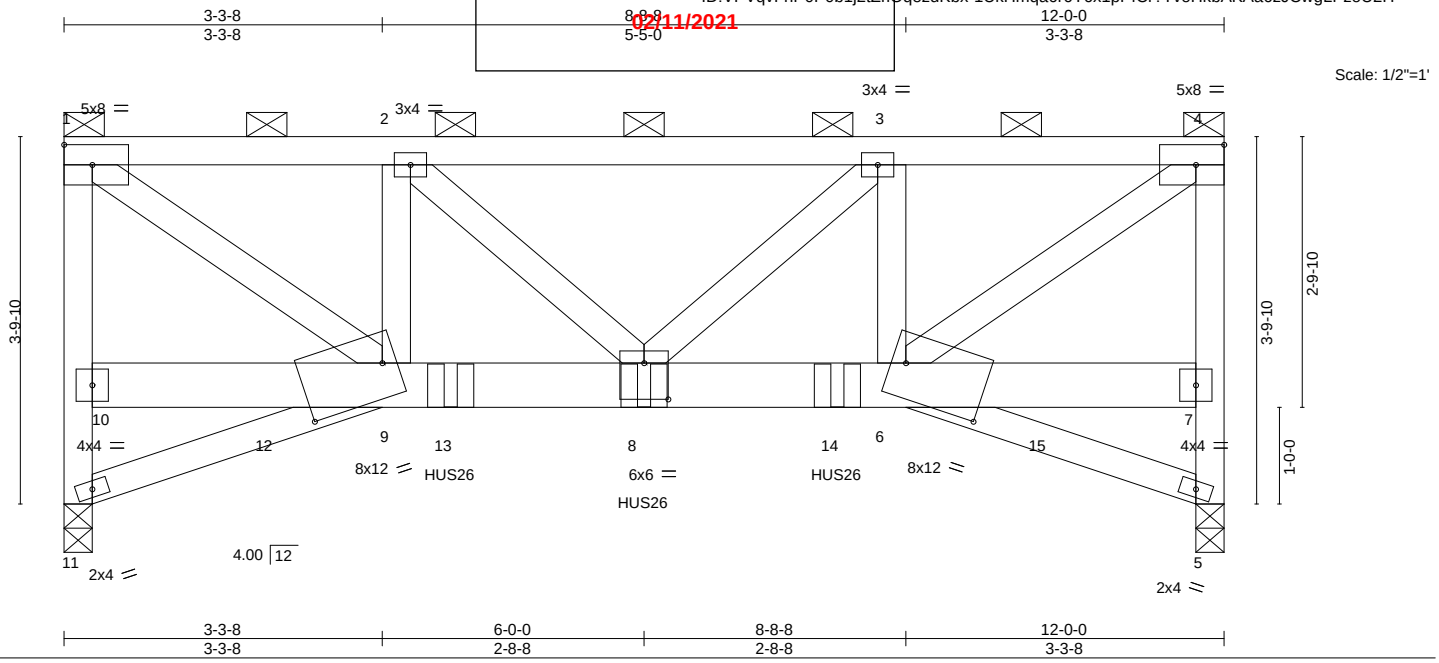


Plate Offsets (X,Y)-- [6:0-10-4,0-4-4], [8:0-3-0,0-4-8], [9:0-10-4,0-4-8], [9:0-10-4,0-4-4]

| LOADING (psf) | | SPACING- 2-0-0 | | CSI. | | DEFL. | in | (loc) | l/defl | L/d | PLATES | GRIP |
|---|---|---|---|---|---|---|---|---|---|---|---|---|
| TCLL | 25.0 | Plate Grip DOL | 1.15 | TC | 0.41 | Vert(LL) | -0.06 | 8 | >999 | 240 | MT20 | 197/144 |
| TCDL | 10.0 | Lumber DOL | 1.15 | BC | 0.63 | Vert(CT) | -0.10 | 8 | >999 | 180 | | |
| BCLL | 0.0 * | Rep Stress Incr | NO | WB | 0.70 | Horz(CT) | 0.07 | 5 | n/a | n/a | | |
| BCDL | 10.0 | Code IRC2018/TPI2014 | | Matrix-MS | | | | | | | Weight: 139 lb | FT = 20% |

**LUMBER-**
TOP CHORD 2x4 SPF No.2
BOT CHORD 2x4 SPF No.2 *Except*
7-10: 2x6 SPF No.2
WEBS 2x4 SPF No.2

**BRACING-**
TOP CHORD 2-0-0 oc purlins (4-10-13 max.): 1-4, except end verticals.
BOT CHORD Rigid ceiling directly applied or 10-0-0 oc bracing.

**REACTIONS.** (size) 11=0-3-8, 5=0-3-8
Max Horz 11=-122(LC 4)
Max Uplift 11=-451(LC 4), 5=-459(LC 5)
Max Grav 11=3916(LC 1), 5=3973(LC 1)

**FORCES.** (lb) - Max. Comp./Max. Ten. - All forces 250 (lb) or less except when shown.
TOP CHORD 10-11=-3884/469, 1-10=-3476/413, 1-2=-4666/551, 2-3=-5655/593, 3-4=-4605/504, 5-7=-3947/478, 4-7=-3428/403
BOT CHORD 8-9=-604/4666, 6-8=-557/4605
WEBS 1-9=-640/5667, 2-9=-1230/273, 3-6=-1289/200, 4-6=-627/5586, 2-8=-345/1361, 3-8=-243/1445

**NOTES-**
1) 2-ply truss to be connected together with 10d (0.131"x3") nails as follows:
Top chords connected as follows: 2x4 - 1 row at 0-9-0 oc.
Bottom chords connected as follows: 2x4 - 1 row at 0-9-0 oc, 2x6 - 2 rows staggered at 0-5-0 oc.
Webs connected as follows: 2x4 - 1 row at 0-9-0 oc.
2) All loads are considered equally applied to all plies, except if noted as front (F) or back (B) face in the LOAD CASE(S) section. Ply to ply connections have been provided to distribute only loads noted as (F) or (B), unless otherwise indicated.
3) Wind: ASCE 7-16; Vult=115mph (3-second gust) Vasd=91mph; TCDL=6.0psf; BCDL=6.0psf; h=15ft; Cat. II; Exp C; Enclosed; MWFRS (envelope) gable end zone; cantilever left and right exposed ; end vertical left and right exposed; Lumber DOL=1.60 plate grip DOL=1.60
4) Provide adequate drainage to prevent water ponding.
5) This truss has been designed for a 10.0 psf bottom chord live load nonconcurrent with any other live loads.
6) * This truss has been designed for a live load of 20.0psf on the bottom chord in all areas where a rectangle 3-6-0 tall by 2-0-0 wide will fit between the bottom chord and any other members.
7) Bearing at joint(s) 11, 5 considers parallel to grain value using ANSI/TPI 1 angle to grain formula. Building designer should verify capacity of bearing surface.
8) Provide mechanical connection (by others) of truss to bearing plate capable of withstanding 100 lb uplift at joint(s) except (jt=lb) 11=451, 5=459.
9) This truss is designed in accordance with the 2018 International Residential Code sections R502.11.1 and R802.10.2 and referenced standard ANSI/TPI 1.
10) Graphical purlin representation does not depict the size or the orientation of the purlin along the top and/or bottom chord.
11) Use Simpson Strong-Tie HUS26 (14-10d Girder, 6-10d Truss, Single Ply Girder) or equivalent spaced at 2-0-0 oc max. starting at 4-0-0 from the left end to 8-0-0 to connect truss(es) to front face of bottom chord.
12) Fill all nail holes where hanger is in contact with lumber.

Continued on page 2


February 5,2021



MiTek
16023 Swingley Ridge Rd
Chesterfield, MO 63017

RELEASE FOR CONSTRUCTION
AS NOTED ON PLANS REVIEW
DEVELOPMENT SERVICES
LEE'S SUMMIT, MISSOURI
02/11/2021

**NOTES-**

13) Hanger(s) or other connection device(s) shall be provided sufficient to support concentrated load(s) . The design/selection of such connection device(s) is the responsibility of others.

**LOAD CASE(S)** Standard

1) Dead + Roof Live (balanced): Lumber Increase=1.15, Plate Increase=1.15
   Uniform Loads (plf)
   Vert: 1-4=-70, 9-11=-20, 6-9=-20, 5-6=-20
   Concentrated Loads (lb)
   Vert: 8=-1514(F) 12=-1146(F) 13=-1514(F) 14=-1514(F) 15=-1146(F)

| Job | Truss | Truss Type | Qty | Ply | Summit/100 Stoney |
|---|---|---|---|---|---|
| 2623880 | JD1 | Jack-Open | 2 | 1 | I44681440 |
| | | | | | Job Reference (optional) |

RELEASE FOR CONSTRUCTION
AS NOTED ON PLANS REVIEW
DEVELOPMENT SERVICES
LEE'S SUMMIT, MISSOURI
02/11/2021

Builders FirstSource (Valley Center), Valley Center, KS - 67147, 8.240 s Mar 9 2020 MiTek Industries, Inc. Thu Feb 4 15:19:41 2021 Page 1
ID:VPVqvFnP0P0b1j2tZnOqezdKbx-VgIf_AbkcQgzZBObCwME07LWg_fivAR6YsgEtrzoU2G

-1-3-9 2-8-7
1-3-9 2-8-7

Scale: 1"=1'

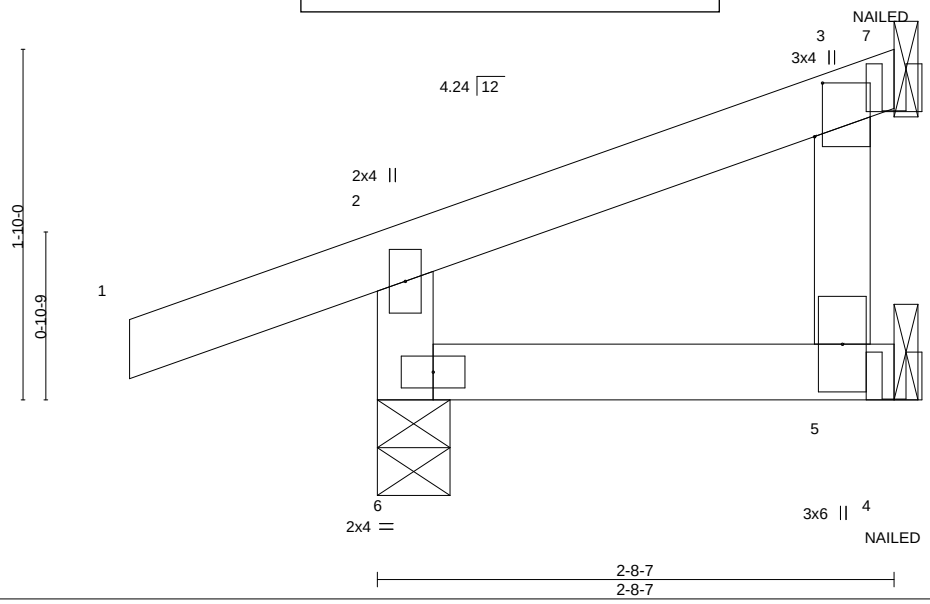


Plate Offsets (X,Y)-- [3:0-3-6,0-0-8]

| LOADING (psf) | | SPACING- | 2-0-0 | CSI. | | DEFL. | in | (loc) | l/defl | L/d | PLATES | GRIP |
|---|---|---|---|---|---|---|---|---|---|---|---|---|
| TCLL | 25.0 | Plate Grip DOL | 1.15 | TC | 0.14 | Vert(LL) | -0.00 | 5-6 | >999 | 240 | MT20 | 197/144 |
| TCDL | 10.0 | Lumber DOL | 1.15 | BC | 0.05 | Vert(CT) | -0.00 | 5-6 | >999 | 180 | | |
| BCLL | 0.0 * | Rep Stress Incr | YES | WB | 0.11 | Horz(CT) | -0.02 | 3 | n/a | n/a | | |
| BCDL | 10.0 | Code IRC2018/TPI2014 | | Matrix-MP | | | | | | | Weight: 10 lb | FT = 20% |

**LUMBER-**
TOP CHORD 2x4 SPF No.2
BOT CHORD 2x4 SPF No.2
WEBS 2x4 SPF No.2

**BRACING-**
TOP CHORD Structural wood sheathing directly applied or 2-8-7 oc purlins, except end verticals.
BOT CHORD Rigid ceiling directly applied or 10-0-0 oc bracing.

**REACTIONS.** (size) 6=0-4-9, 5=Mechanical, 3=Mechanical
Max Horz 6=48(LC 8)
Max Uplift 6=-100(LC 8), 3=-554(LC 8)
Max Grav 6=239(LC 1), 5=568(LC 29), 3=55(LC 1)

**FORCES.** (lb) - Max. Comp./Max. Ten. - All forces 250 (lb) or less except when shown.
WEBS 3-5=-1189/456

**NOTES-**
1) Wind: ASCE 7-16; Vult=115mph (3-second gust) Vasd=91mph; TCDL=6.0psf; BCDL=6.0psf; h=15ft; Cat. II; Exp C; Enclosed; MWFRS (envelope) gable end zone and C-C Corner(3) zone; cantilever left and right exposed ; end vertical left and right exposed;C-C for members and forces & MWFRS for reactions shown; Lumber DOL=1.60 plate grip DOL=1.60
2) This truss has been designed for a 10.0 psf bottom chord live load nonconcurrent with any other live loads.
3) * This truss has been designed for a live load of 20.0psf on the bottom chord in all areas where a rectangle 3-6-0 tall by 2-0-0 wide will fit between the bottom chord and any other members.
4) Refer to girder(s) for truss to truss connections.
5) Bearing at joint(s) 6 considers parallel to grain value using ANSI/TPI 1 angle to grain formula. Building designer should verify capacity of bearing surface.
6) Provide mechanical connection (by others) of truss to bearing plate capable of withstanding 100 lb uplift at joint(s) except (jt=lb) 6=100, 3=554.
7) This truss is designed in accordance with the 2018 International Residential Code sections R502.11.1 and R802.10.2 and referenced standard ANSI/TPI 1.
8) Gap between inside of top chord bearing and first diagonal or vertical web shall not exceed 0.500in.
9) "NAILED" indicates 3-10d (0.148"x3") or 2-12d (0.148"x3.25") toe-nails per NDS guidlines.
10) In the LOAD CASE(S) section, loads applied to the face of the truss are noted as front (F) or back (B).

**LOAD CASE(S)** Standard
1) Dead + Roof Live (balanced): Lumber Increase=1.15, Plate Increase=1.15
Uniform Loads (plf)
Vert: 1-2=-70, 2-3=-70, 4-6=-20
Concentrated Loads (lb)
Vert: 5=1(F)

STATE OF MISSOURI
SCOTT M. SEVIER
NUMBER PE-2001018807
PROFESSIONAL ENGINEER

February 5,2021




MiTek
16023 Swingley Ridge Rd
Chesterfield, MO 63017

| Job | Truss | Truss Type | Qty | Ply | Summit/100 Stoney |
|---|---|---|---|---|---|
| 2623880 | JD2 | Jack-Open | 2 | 1 | I44681441 |

Job Reference (optional)

RELEASE FOR CONSTRUCTION
AS NOTED ON PLANS REVIEW
DEVELOPMENT SERVICES
LEE'S SUMMIT, MISSOURI
02/11/2021

Builders FirstSource (Valley Center), Valley Center, KS - 67147, 8.240 s Mar 9 2020 MiTek Industries, Inc. Thu Feb 4 15:19:42 2021 Page 1
ID:VPVqvFnP0P0b1j2tZrlOqezdKbx-zts1BWcMNkoqALzomdtTYKuhMO?0eeTGnWPnQIzoU2F

-0-11-0 / 0-11-0 — 1-10-3 / 1-10-3

Scale: 1"=1'

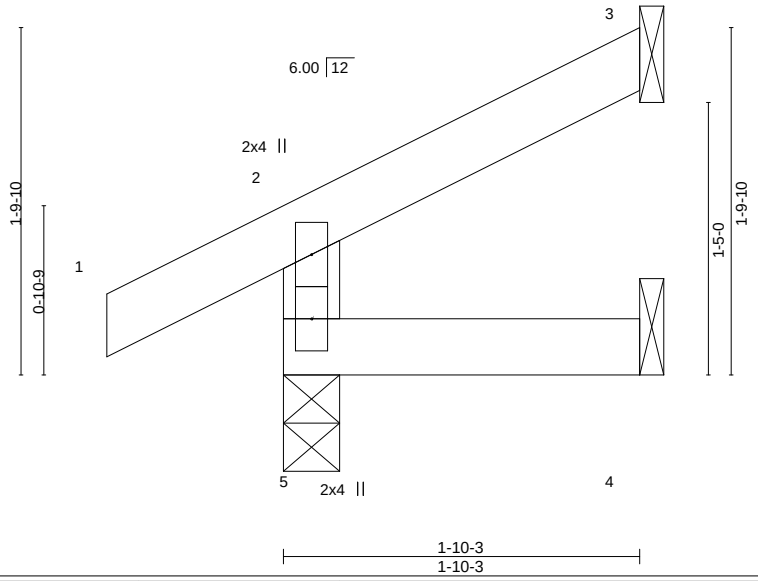


| LOADING (psf) | | SPACING- 2-0-0 | | CSI. | | DEFL. in (loc) l/defl L/d | | PLATES GRIP |
|---|---|---|---|---|---|---|---|---|
| TCLL | 25.0 | Plate Grip DOL | 1.15 | TC | 0.08 | Vert(LL) -0.00 5 >999 240 | | MT20 197/144 |
| TCDL | 10.0 | Lumber DOL | 1.15 | BC | 0.04 | Vert(CT) -0.00 5 >999 180 | | |
| BCLL | 0.0 * | Rep Stress Incr | YES | WB | 0.00 | Horz(CT) -0.00 3 n/a n/a | | |
| BCDL | 10.0 | Code IRC2018/TPI2014 | | Matrix-MR | | | | Weight: 6 lb FT = 20% |

**LUMBER-**
TOP CHORD 2x4 SPF No.2
BOT CHORD 2x4 SPF No.2
WEBS 2x4 SPF No.2

**BRACING-**
TOP CHORD Structural wood sheathing directly applied or 1-10-3 oc purlins, except end verticals.
BOT CHORD Rigid ceiling directly applied or 10-0-0 oc bracing.

**REACTIONS.** (size) 5=0-3-8, 3=Mechanical, 4=Mechanical
Max Horz 5=41(LC 9)
Max Uplift 5=-16(LC 12), 3=-27(LC 12)
Max Grav 5=174(LC 1), 3=40(LC 1), 4=30(LC 3)

**FORCES.** (lb) - Max. Comp./Max. Ten. - All forces 250 (lb) or less except when shown.

**NOTES-**
1) Wind: ASCE 7-16; Vult=115mph (3-second gust) Vasd=91mph; TCDL=6.0psf; BCDL=6.0psf; h=15ft; Cat. II; Exp C; Enclosed; MWFRS (envelope) gable end zone and C-C Exterior(2E) zone; cantilever left and right exposed ; end vertical left and right exposed;C-C for members and forces & MWFRS for reactions shown; Lumber DOL=1.60 plate grip DOL=1.60
2) This truss has been designed for a 10.0 psf bottom chord live load nonconcurrent with any other live loads.
3) * This truss has been designed for a live load of 20.0psf on the bottom chord in all areas where a rectangle 3-6-0 tall by 2-0-0 wide will fit between the bottom chord and any other members.
4) Refer to girder(s) for truss to truss connections.
5) Provide mechanical connection (by others) of truss to bearing plate capable of withstanding 100 lb uplift at joint(s) 5, 3.
6) This truss is designed in accordance with the 2018 International Residential Code sections R502.11.1 and R802.10.2 and referenced standard ANSI/TPI 1.

STATE OF MISSOURI
SCOTT M. SEVIER
NUMBER
PE-2001018807
PROFESSIONAL ENGINEER

February 5,2021



MiTek
16023 Swingley Ridge Rd
Chesterfield, MO 63017

| Job | Truss | Truss Type | Qty | Ply | Summit/100 Stoney |
|---|---|---|---|---|---|
| 2623880 | JD3 | Jack-Open | 3 | 1 | I44681442 |

Job Reference (optional)

RELEASE FOR CONSTRUCTION
AS NOTED ON PLANS REVIEW
DEVELOPMENT SERVICES
LEE'S SUMMIT, MISSOURI
02/11/2021

Builders FirstSource (Valley Center), Valley Center, KS - 67147, 8.240 s Mar 9 2020 MiTek Industries, Inc. Thu Feb 4 15:19:43 2021 Page 1
ID:VPVqvFnP0P0b1j2tZrIOqezdKbx-R3QPPsc_81whoVY_KLOi5YQs6oLAN5iP?A9KykzoU2E

-0-11-0 2-0-0
0-11-0 2-0-0

Scale = 1:12.3

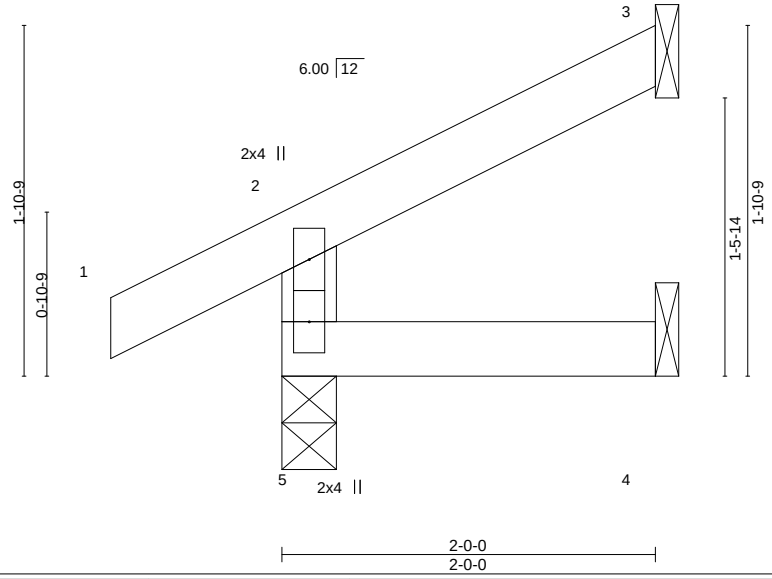


| LOADING (psf) | | SPACING- 2-0-0 | | CSI. | | DEFL. in (loc) l/defl L/d | | PLATES GRIP |
|---|---|---|---|---|---|---|---|---|
| TCLL | 25.0 | Plate Grip DOL | 1.15 | TC | 0.08 | Vert(LL) -0.00 5 >999 240 | | MT20 197/144 |
| TCDL | 10.0 | Lumber DOL | 1.15 | BC | 0.05 | Vert(CT) -0.00 4-5 >999 180 | | |
| BCLL | 0.0 * | Rep Stress Incr | YES | WB | 0.00 | Horz(CT) -0.00 3 n/a n/a | | |
| BCDL | 10.0 | Code IRC2018/TPI2014 | | Matrix-MR | | | | Weight: 7 lb FT = 20% |

**LUMBER-**
TOP CHORD 2x4 SPF No.2
BOT CHORD 2x4 SPF No.2
WEBS 2x4 SPF No.2

**BRACING-**
TOP CHORD Structural wood sheathing directly applied or 2-0-0 oc purlins, except end verticals.
BOT CHORD Rigid ceiling directly applied or 10-0-0 oc bracing.

**REACTIONS.** (size) 5=0-3-8, 3=Mechanical, 4=Mechanical
Max Horz 5=42(LC 12)
Max Uplift 5=-16(LC 12), 3=-30(LC 12)
Max Grav 5=179(LC 1), 3=46(LC 1), 4=33(LC 3)

**FORCES.** (lb) - Max. Comp./Max. Ten. - All forces 250 (lb) or less except when shown.

**NOTES-**
1) Wind: ASCE 7-16; Vult=115mph (3-second gust) Vasd=91mph; TCDL=6.0psf; BCDL=6.0psf; h=15ft; Cat. II; Exp C; Enclosed; MWFRS (envelope) gable end zone and C-C Exterior(2E) zone; cantilever left and right exposed ; end vertical left and right exposed;C-C for members and forces & MWFRS for reactions shown; Lumber DOL=1.60 plate grip DOL=1.60
2) This truss has been designed for a 10.0 psf bottom chord live load nonconcurrent with any other live loads.
3) * This truss has been designed for a live load of 20.0psf on the bottom chord in all areas where a rectangle 3-6-0 tall by 2-0-0 wide will fit between the bottom chord and any other members.
4) Refer to girder(s) for truss to truss connections.
5) Provide mechanical connection (by others) of truss to bearing plate capable of withstanding 100 lb uplift at joint(s) 5, 3.
6) This truss is designed in accordance with the 2018 International Residential Code sections R502.11.1 and R802.10.2 and referenced standard ANSI/TPI 1.

STATE OF MISSOURI
SCOTT M. SEVIER
NUMBER PE-2001018807
PROFESSIONAL ENGINEER

February 5,2021



MiTek
16023 Swingley Ridge Rd
Chesterfield, MO 63017

| Job | Truss | Truss Type | Qty | Ply | Summit/100 Stoney |
|---|---|---|---|---|---|
| 2623880 | LG1 | GABLE | 1 | 1 | I44681443 |

Job Reference (optional)

RELEASE FOR CONSTRUCTION
AS NOTED ON PLANS REVIEW
DEVELOPMENT SERVICES
LEE'S SUMMIT, MISSOURI
02/11/2021

Builders FirstSource (Valley Center), Valley Center, KS - 67147, 8.240 s Mar 9 2020 MiTek Industries, Inc. Thu Feb 4 15:19:44 2021 Page 1
ID:VPVqvFnP0P0b1j2tZrlOqezdKbx-vF_ncCdcvL2YQf7Au2wxdlz2AChl6YXZEquuUAzoU2D

3-10-4 7-8-9
3-10-4 3-10-4

Scale = 1:29.5

4x4 =

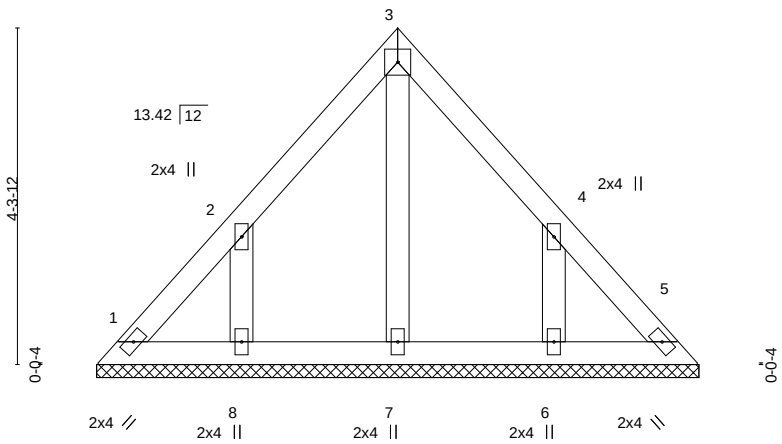


| LOADING (psf) | | SPACING- | 2-0-0 | CSI. | | DEFL. | in | (loc) | l/defl | L/d | PLATES | GRIP |
|---|---|---|---|---|---|---|---|---|---|---|---|---|
| TCLL | 25.0 | Plate Grip DOL | 1.15 | TC | 0.06 | Vert(LL) | n/a | - | n/a | 999 | MT20 | 197/144 |
| TCDL | 10.0 | Lumber DOL | 1.15 | BC | 0.02 | Vert(CT) | n/a | - | n/a | 999 | | |
| BCLL | 0.0 * | Rep Stress Incr | YES | WB | 0.03 | Horz(CT) | 0.00 | 5 | n/a | n/a | | |
| BCDL | 10.0 | Code IRC2018/TPI2014 | | Matrix-P | | | | | | | Weight: 29 lb | FT = 20% |

**LUMBER-**
TOP CHORD 2x4 SPF No.2
BOT CHORD 2x4 SPF No.2
OTHERS 2x4 SPF No.2

**BRACING-**
TOP CHORD Structural wood sheathing directly applied or 6-0-0 oc purlins.
BOT CHORD Rigid ceiling directly applied or 10-0-0 oc bracing.

**REACTIONS.** All bearings 7-8-9.
(lb) - Max Horz 1=-96(LC 10)
Max Uplift All uplift 100 lb or less at joint(s) 1, 5 except 8=-132(LC 12), 6=-132(LC 13)
Max Grav All reactions 250 lb or less at joint(s) 1, 5, 7, 8, 6

**FORCES.** (lb) - Max. Comp./Max. Ten. - All forces 250 (lb) or less except when shown.

**NOTES-**
1) Unbalanced roof live loads have been considered for this design.
2) Wind: ASCE 7-16; Vult=115mph (3-second gust) Vasd=91mph; TCDL=6.0psf; BCDL=6.0psf; h=15ft; Cat. II; Exp C; Enclosed; MWFRS (envelope) gable end zone and C-C Exterior(2E) 0-3-15 to 3-3-15, Interior(1) 3-3-15 to 3-10-4, Exterior(2R) 3-10-4 to 6-10-4 , Interior(1) 6-10-4 to 7-4-10 zone; cantilever left and right exposed ; end vertical left and right exposed;C-C for members and forces & MWFRS for reactions shown; Lumber DOL=1.60 plate grip DOL=1.60
3) Gable requires continuous bottom chord bearing.
4) This truss has been designed for a 10.0 psf bottom chord live load nonconcurrent with any other live loads.
5) * This truss has been designed for a live load of 20.0psf on the bottom chord in all areas where a rectangle 3-6-0 tall by 2-0-0 wide will fit between the bottom chord and any other members.
6) Provide mechanical connection (by others) of truss to bearing plate capable of withstanding 100 lb uplift at joint(s) 1, 5 except (jt=lb) 8=132, 6=132.
7) This truss is designed in accordance with the 2018 International Residential Code sections R502.11.1 and R802.10.2 and referenced standard ANSI/TPI 1.


February 5,2021



MiTek
16023 Swingley Ridge Rd
Chesterfield, MO 63017

| Job | Truss | Truss Type | Qty | Ply | Summit/100 Stoney |
|---|---|---|---|---|---|
| 2623880 | M1 | GABLE | 1 | 1 | I44681444 |

Job Reference (optional)

RELEASE FOR CONSTRUCTION
AS NOTED ON PLANS REVIEW
DEVELOPMENT SERVICES
LEE'S SUMMIT, MISSOURI
02/11/2021

Builders FirstSource (Valley Center), Valley Center, KS - 67147, 8.240 s Mar 9 2020 MiTek Industries, Inc. Thu Feb 4 15:19:45 2021 Page 1
ID:VPVqvFnP0P0b1j2tZrI0qezdKbx-OSYApYeEgfAP1oiNRlRAAzWCpc?Mr?ciTUeR0czoU2C

-0-11-0 / 0-11-0 — 9-11-8 / 9-11-8

Scale = 1:27.0

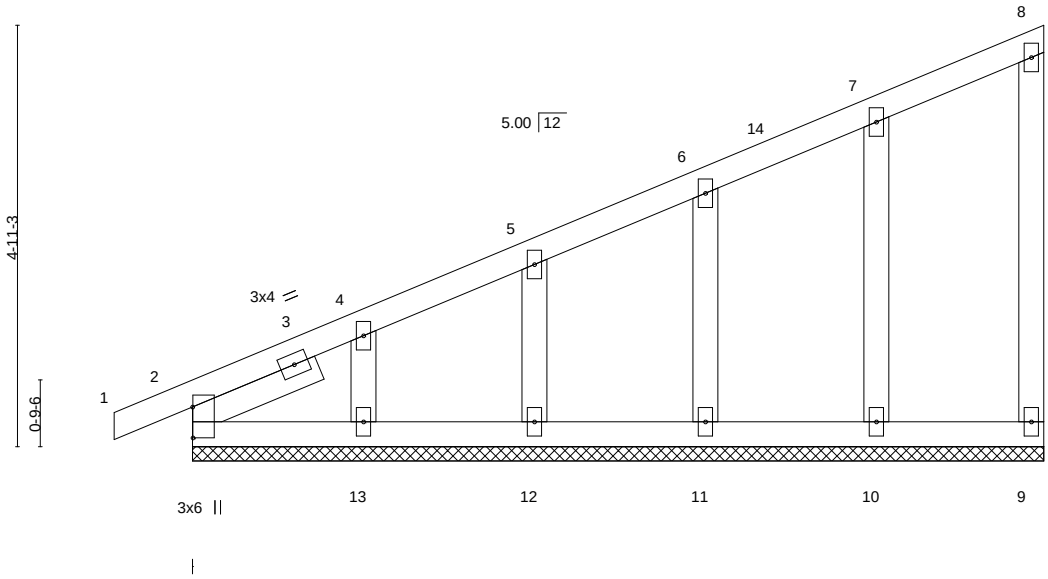


Plate Offsets (X,Y)-- [2:0-4-5,0-0-1]

| LOADING (psf) | | SPACING- | 2-0-0 | CSI. | | DEFL. | in | (loc) | l/defl | L/d | PLATES | GRIP |
|---|---|---|---|---|---|---|---|---|---|---|---|---|
| TCLL | 25.0 | Plate Grip DOL | 1.15 | TC | 0.13 | Vert(LL) | -0.00 | 1 | n/r | 120 | MT20 | 197/144 |
| TCDL | 10.0 | Lumber DOL | 1.15 | BC | 0.06 | Vert(CT) | -0.00 | 1 | n/r | 120 | | |
| BCLL | 0.0 * | Rep Stress Incr | YES | WB | 0.04 | Horz(CT) | 0.00 | 9 | n/a | n/a | | |
| BCDL | 10.0 | Code IRC2018/TPI2014 | | Matrix-S | | | | | | | Weight: 42 lb | FT = 20% |

**LUMBER-**
TOP CHORD 2x4 SPF No.2
BOT CHORD 2x4 SPF No.2
WEBS 2x4 SPF No.2
OTHERS 2x4 SPF No.2
SLIDER Left 2x4 SPF No.2 1-7-6

**BRACING-**
TOP CHORD Structural wood sheathing directly applied or 6-0-0 oc purlins, except end verticals.
BOT CHORD Rigid ceiling directly applied or 10-0-0 oc bracing.

**REACTIONS.** All bearings 9-11-8.
(lb) - Max Horz 2=177(LC 9)
Max Uplift All uplift 100 lb or less at joint(s) 9, 13, 12, 11, 10
Max Grav All reactions 250 lb or less at joint(s) 9, 2, 13, 12, 11, 10

**FORCES.** (lb) - Max. Comp./Max. Ten. - All forces 250 (lb) or less except when shown.
TOP CHORD 2-4=-354/176, 4-5=-250/141

**NOTES-**
1) Wind: ASCE 7-16; Vult=115mph (3-second gust) Vasd=91mph; TCDL=6.0psf; BCDL=6.0psf; h=15ft; Cat. II; Exp C; Enclosed; MWFRS (envelope) gable end zone and C-C Corner(3E) -0-11-0 to 2-0-0, Exterior(2N) 2-0-0 to 9-9-12 zone; cantilever left and right exposed ; end vertical left and right exposed;C-C for members and forces & MWFRS for reactions shown; Lumber DOL=1.60 plate grip DOL=1.60
2) Truss designed for wind loads in the plane of the truss only. For studs exposed to wind (normal to the face), see Standard Industry Gable End Details as applicable, or consult qualified building designer as per ANSI/TPI 1.
3) All plates are 2x4 MT20 unless otherwise indicated.
4) Gable requires continuous bottom chord bearing.
5) Gable studs spaced at 2-0-0 oc.
6) This truss has been designed for a 10.0 psf bottom chord live load nonconcurrent with any other live loads.
7) * This truss has been designed for a live load of 20.0psf on the bottom chord in all areas where a rectangle 3-6-0 tall by 2-0-0 wide will fit between the bottom chord and any other members.
8) Provide mechanical connection (by others) of truss to bearing plate capable of withstanding 100 lb uplift at joint(s) 9, 13, 12, 11, 10.
9) This truss is designed in accordance with the 2018 International Residential Code sections R502.11.1 and R802.10.2 and referenced standard ANSI/TPI 1.


February 5,2021



MiTek
16023 Swingley Ridge Rd
Chesterfield, MO 63017

| Job | Truss | Truss Type | Qty | Ply | Summit/100 Stoney |
|---|---|---|---|---|---|
| 2623880 | M2 | Common | 5 | 1 | I44681445 |
| | | | | | Job Reference (optional) |

**RELEASE FOR CONSTRUCTION**
**AS NOTED ON PLANS REVIEW**
**DEVELOPMENT SERVICES**
**LEE'S SUMMIT, MISSOURI**
**02/11/2021**

Builders FirstSource (Valley Center), Valley Center, KS - 67147, 8.240 s Mar 9 2020 MiTek Industries, Inc. Thu Feb 4 15:19:46 2021 Page 1
ID:VPVqvFnP0P0b1j2tZrlOqezdKbx-se6Y1uftRyIGfyHZ?TyPjA2Cv?AhaPCsi8N_Z3zoU2B

-0-11-0 7-9-12 15-4-0 22-10-4 30-8-0 31-7-0
0-11-0 7-9-12 7-6-4 7-6-4 7-9-12 0-11-0

Scale = 1:52.1

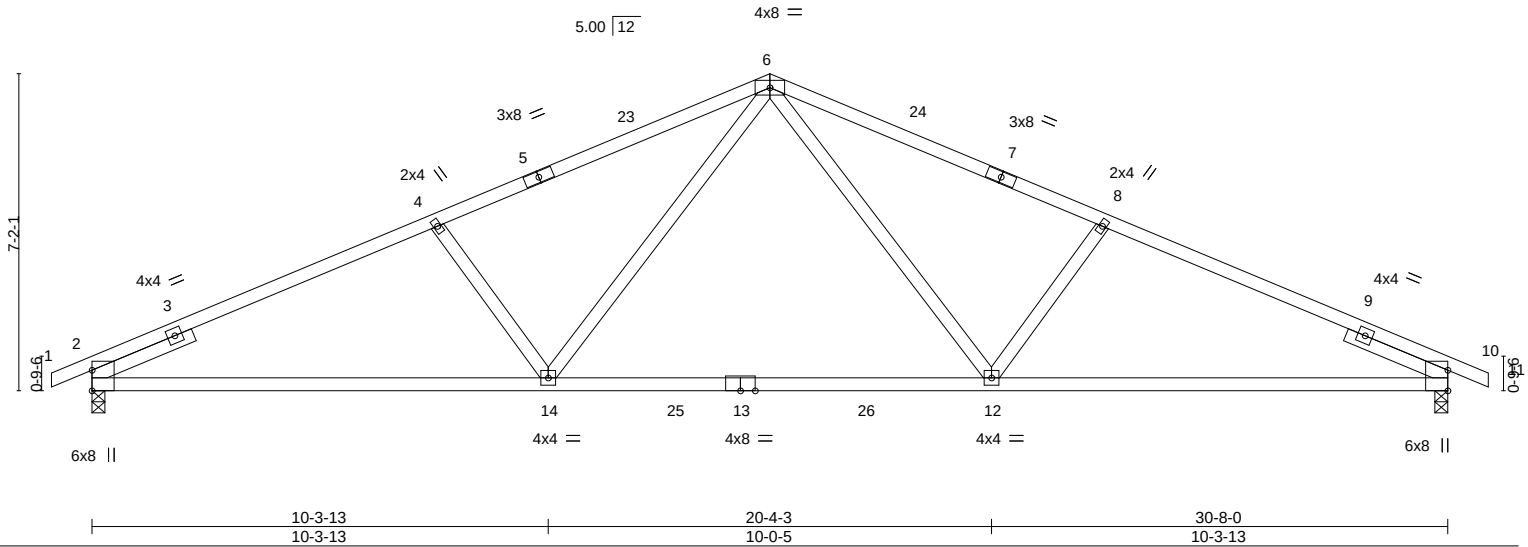


| LOADING (psf) | | SPACING- 2-0-0 | | CSI. | | DEFL. | in | (loc) | l/defl | L/d | PLATES | GRIP |
|---|---|---|---|---|---|---|---|---|---|---|---|---|
| TCLL | 25.0 | Plate Grip DOL | 1.15 | TC | 0.81 | Vert(LL) | -0.46 | 12-14 | >801 | 240 | MT20 | 197/144 |
| TCDL | 10.0 | Lumber DOL | 1.15 | BC | 0.83 | Vert(CT) | -0.72 | 12-14 | >509 | 180 | | |
| BCLL | 0.0 * | Rep Stress Incr | YES | WB | 0.21 | Horz(CT) | 0.11 | 10 | n/a | n/a | | |
| BCDL | 10.0 | Code IRC2018/TPI2014 | | Matrix-AS | | | | | | | Weight: 110 lb | FT = 20% |

**LUMBER-**
TOP CHORD 2x4 SPF No.2
BOT CHORD 2x4 SPF 1650F 1.5E
WEBS 2x4 SPF No.2
SLIDER Left 2x4 SPF No.2 2-6-0, Right 2x4 SPF No.2 2-6-0

**BRACING-**
TOP CHORD Structural wood sheathing directly applied.
BOT CHORD Rigid ceiling directly applied.

**REACTIONS.** (size) 2=0-3-8, 10=0-3-8
Max Horz 2=-107(LC 17)
Max Uplift 2=-139(LC 12), 10=-139(LC 13)
Max Grav 2=1503(LC 2), 10=1503(LC 2)

**FORCES.** (lb) - Max. Comp./Max. Ten. - All forces 250 (lb) or less except when shown.
TOP CHORD 2-4=-2579/242, 4-6=-2380/229, 6-8=-2380/229, 8-10=-2579/242
BOT CHORD 2-14=-241/2318, 12-14=-58/1644, 10-12=-134/2318
WEBS 6-12=-86/851, 8-12=-477/231, 6-14=-86/851, 4-14=-477/231

**NOTES-**
1) Unbalanced roof live loads have been considered for this design.
2) Wind: ASCE 7-16; Vult=115mph (3-second gust) Vasd=91mph; TCDL=6.0psf; BCDL=6.0psf; h=15ft; Cat. II; Exp C; Enclosed; MWFRS (envelope) gable end zone and C-C Exterior(2E) -0-11-0 to 2-1-0, Interior(1) 2-1-0 to 15-4-0, Exterior(2R) 15-4-0 to 18-4-0, Interior(1) 18-4-0 to 31-7-0 zone; cantilever left and right exposed ; end vertical left and right exposed;C-C for members and forces & MWFRS for reactions shown; Lumber DOL=1.60 plate grip DOL=1.60
3) This truss has been designed for a 10.0 psf bottom chord live load nonconcurrent with any other live loads.
4) * This truss has been designed for a live load of 20.0psf on the bottom chord in all areas where a rectangle 3-6-0 tall by 2-0-0 wide will fit between the bottom chord and any other members, with BCDL = 10.0psf.
5) Provide mechanical connection (by others) of truss to bearing plate capable of withstanding 100 lb uplift at joint(s) except (jt=lb) 2=139, 10=139.
6) This truss is designed in accordance with the 2018 International Residential Code sections R502.11.1 and R802.10.2 and referenced standard ANSI/TPI 1.
7) This truss design requires that a minimum of 7/16" structural wood sheathing be applied directly to the top chord and 1/2" gypsum sheetrock be applied directly to the bottom chord.

STATE OF MISSOURI
SCOTT M. SEVIER
NUMBER PE-2001018807
PROFESSIONAL ENGINEER

February 5,2021



MiTek
16023 Swingley Ridge Rd
Chesterfield, MO 63017

| Job | Truss | Truss Type | Qty | Ply | Summit/100 Stoney |
|---|---|---|---|---|---|
| 2623880 | M4 | GABLE | 1 | 1 | I44681446 |

Job Reference (optional)

**RELEASE FOR CONSTRUCTION**
**AS NOTED ON PLANS REVIEW**
**DEVELOPMENT SERVICES**
**LEE'S SUMMIT, MISSOURI**
**02/11/2021**

Builders FirstSource (Valley Center), Valley Center, KS - 67147,

8.240 s Mar 9 2020 MiTek Industries, Inc. Thu Feb 4 15:19:48 2021 Page 1
ID:VPVqvFnP0P0b1j2tZrlOqezdKbx-o1DISZg7yaYzuGQy7u_tob8cppxd2Gh89Ss5dxzoU29

-0-11-0 | 7-9-12 | 15-4-0 | 22-10-4 | 30-8-0 | 31-7-0
0-11-0 | 7-9-12 | 7-6-4 | 7-6-4 | 7-9-12 | 0-11-0

Scale = 1:53.6

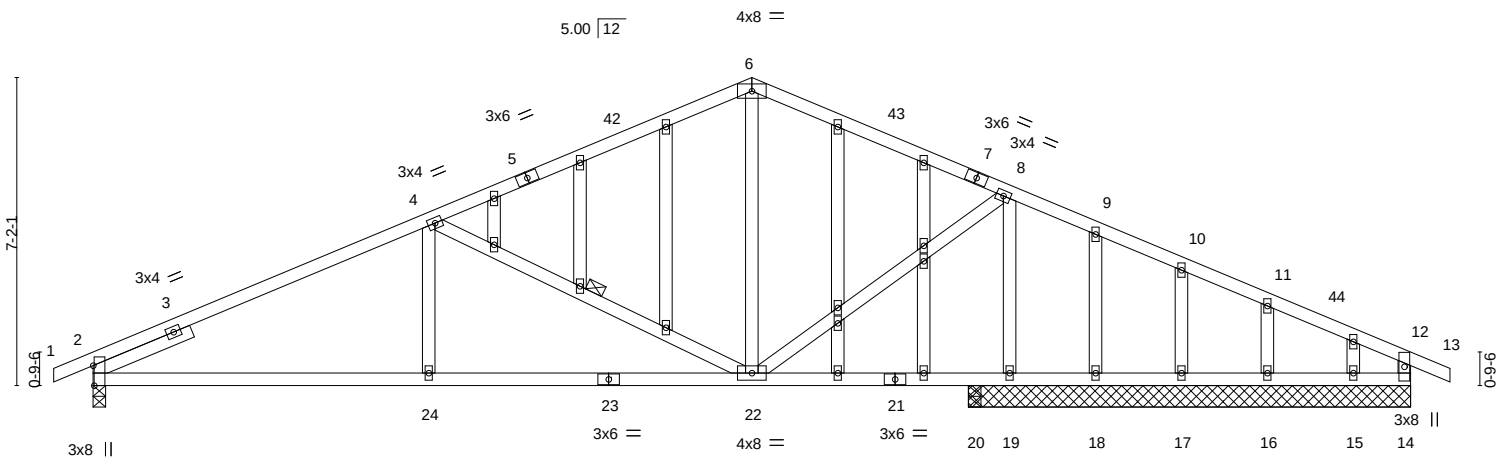


7-9-12 | 15-4-0 | 20-8-0 | 22-10-4 | 30-8-0
7-9-12 | 7-6-4 | 5-4-0 | 2-2-4 | 7-9-12

Plate Offsets (X,Y)-- [2:0-5-9,Edge]

| **LOADING** (psf) | | **SPACING-** 2-0-0 | **CSI.** | | **DEFL.** | in | (loc) | l/defl | L/d | **PLATES** | **GRIP** |
|---|---|---|---|---|---|---|---|---|---|---|---|
| TCLL | 25.0 | Plate Grip DOL 1.15 | TC | 0.53 | Vert(LL) | -0.07 | 22-24 | >999 | 240 | MT20 | 197/144 |
| TCDL | 10.0 | Lumber DOL 1.15 | BC | 0.48 | Vert(CT) | -0.16 | 22-24 | >999 | 180 | | |
| BCLL | 0.0 * | Rep Stress Incr YES | WB | 0.40 | Horz(CT) | 0.03 | 20 | n/a | n/a | | |
| BCDL | 10.0 | Code IRC2018/TPI2014 | Matrix-AS | | | | | | | Weight: 143 lb | FT = 20% |

**LUMBER-**
TOP CHORD 2x4 SPF No.2
BOT CHORD 2x4 SPF No.2
WEBS 2x4 SPF No.2
OTHERS 2x4 SPF No.2
SLIDER Left 2x4 SPF No.2 2-6-0

**BRACING-**
TOP CHORD Structural wood sheathing directly applied, except end verticals.
BOT CHORD Rigid ceiling directly applied.
WEBS 1 Row at midpt 4-22

**REACTIONS.** All bearings 10-3-8 except (jt=length) 2=0-3-8, 20=0-3-8.
(lb) - Max Horz 2=103(LC 16)
Max Uplift All uplift 100 lb or less at joint(s) 19, 17, 16 except 2=-129(LC 12), 14=-102(LC 25)
Max Grav All reactions 250 lb or less at joint(s) 18, 17, 16, 15, 14, 20 except 2=976(LC 1), 19=1130(LC 1)

**FORCES.** (lb) - Max. Comp./Max. Ten. - All forces 250 (lb) or less except when shown.
TOP CHORD 2-4=-1306/200, 4-6=-683/163, 6-8=-654/159, 8-9=0/254
BOT CHORD 2-24=-195/1275, 22-24=-195/1275
WEBS 4-22=-851/205, 4-24=0/306, 8-19=-1172/114, 8-22=-40/881

**NOTES-**
1) Unbalanced roof live loads have been considered for this design.
2) Wind: ASCE 7-16; Vult=115mph (3-second gust) Vasd=91mph; TCDL=6.0psf; BCDL=6.0psf; h=15ft; Cat. II; Exp C; Enclosed; MWFRS (envelope) gable end zone and C-C Exterior(2E) -0-11-0 to 2-1-0, Interior(1) 2-1-0 to 15-4-0, Exterior(2R) 15-4-0 to 18-4-0, Interior(1) 18-4-0 to 31-7-0 zone; cantilever left and right exposed ; end vertical left and right exposed;C-C for members and forces & MWFRS for reactions shown; Lumber DOL=1.60 plate grip DOL=1.60
3) Truss designed for wind loads in the plane of the truss only. For studs exposed to wind (normal to the face), see Standard Industry Gable End Details as applicable, or consult qualified building designer as per ANSI/TPI 1.
4) All plates are 2x4 MT20 unless otherwise indicated.
5) Gable studs spaced at 2-0-0 oc.
6) This truss has been designed for a 10.0 psf bottom chord live load nonconcurrent with any other live loads.
7) * This truss has been designed for a live load of 20.0psf on the bottom chord in all areas where a rectangle 3-6-0 tall by 2-0-0 wide will fit between the bottom chord and any other members.
8) Provide mechanical connection (by others) of truss to bearing plate capable of withstanding 100 lb uplift at joint(s) 19, 17, 16 except (jt=lb) 2=129, 14=102.
9) This truss is designed in accordance with the 2018 International Residential Code sections R502.11.1 and R802.10.2 and referenced standard ANSI/TPI 1.
10) This truss design requires that a minimum of 7/16" structural wood sheathing be applied directly to the top chord and 1/2" gypsum sheetrock be applied directly to the bottom chord.

STATE OF MISSOURI
SCOTT M. SEVIER
NUMBER
PE-2001018807
PROFESSIONAL ENGINEER

February 5,2021




MiTek
16023 Swingley Ridge Rd
Chesterfield, MO 63017

| Job | Truss | Truss Type | Qty | Ply | Summit/100 Stoney |
|---|---|---|---|---|---|
| 2623880 | M5 | GABLE | 1 | 1 | I44681447 |

Job Reference (optional)

RELEASE FOR CONSTRUCTION
AS NOTED ON PLANS REVIEW
DEVELOPMENT SERVICES
LEE'S SUMMIT, MISSOURI
02/11/2021

Builders FirstSource (Valley Center), Valley Center, KS - 67147,

8.240 s Mar 9 2020 MiTek Industries, Inc. Thu Feb 4 15:19:49 2021 Page 1
ID:VPVqvFnP0P0b1j2tZrlOqezdKbx-GDngfvhljtgqWQ?8gbV6Kpgv_DOmnpVIO6cf9OzoU28

0-11-0 | 10-4-0 | 20-8-0 | 21-7-0
0-11-0 | 10-4-0 | 10-4-0 | 0-11-0

Scale = 1:37.3

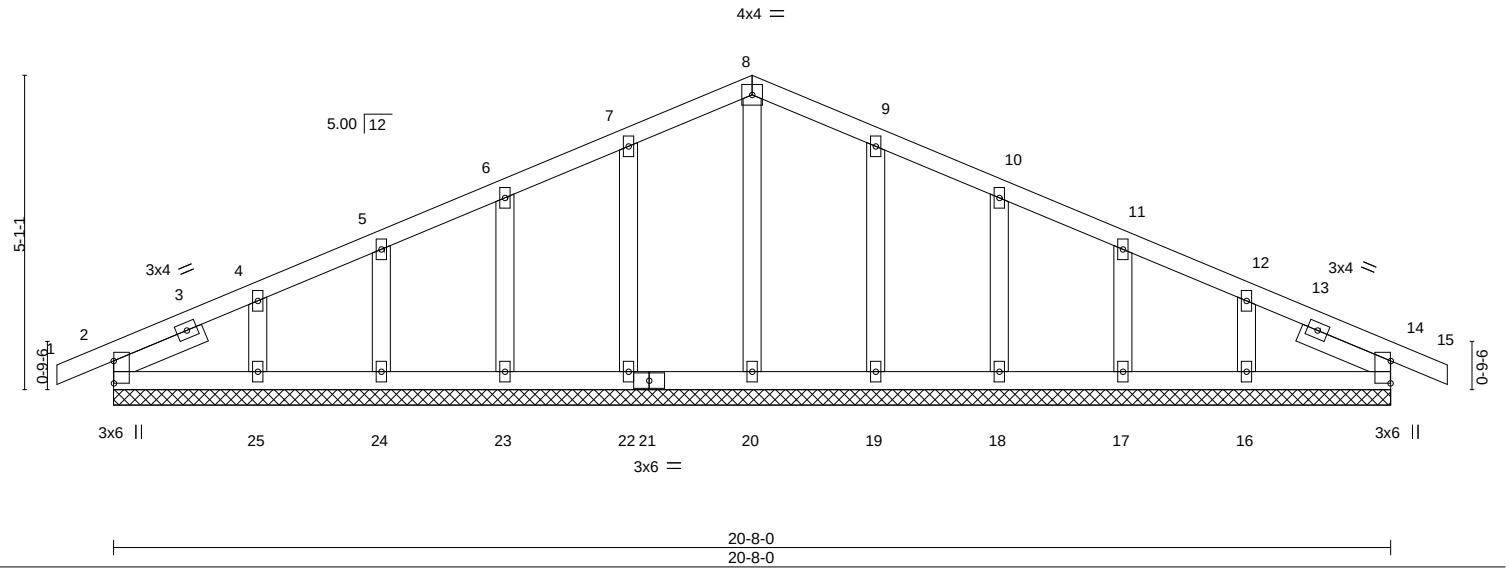


Plate Offsets (X,Y)-- [2:0-4-5,0-0-1], [14:0-4-5,0-0-1]

| LOADING (psf) | | SPACING- 2-0-0 | | CSI. | | DEFL. in (loc) l/defl L/d | | | | | PLATES | GRIP |
|---|---|---|---|---|---|---|---|---|---|---|---|---|
| TCLL | 25.0 | Plate Grip DOL | 1.15 | TC | 0.05 | Vert(LL) | -0.00 | 14 | n/r | 120 | MT20 | 197/144 |
| TCDL | 10.0 | Lumber DOL | 1.15 | BC | 0.03 | Vert(CT) | -0.00 | 14 | n/r | 120 | | |
| BCLL | 0.0 * | Rep Stress Incr | YES | WB | 0.05 | Horz(CT) | 0.00 | 14 | n/a | n/a | | |
| BCDL | 10.0 | Code IRC2018/TPI2014 | | Matrix-S | | | | | | | Weight: 83 lb | FT = 20% |

**LUMBER-**
TOP CHORD 2x4 SPF No.2
BOT CHORD 2x4 SPF No.2
OTHERS 2x4 SPF No.2
SLIDER Left 2x4 SPF No.2 1-7-4, Right 2x4 SPF No.2 1-7-4

**BRACING-**
TOP CHORD Structural wood sheathing directly applied or 6-0-0 oc purlins.
BOT CHORD Rigid ceiling directly applied or 10-0-0 oc bracing.

**REACTIONS.** All bearings 20-8-0.
(lb) - Max Horz 2=74(LC 12)
Max Uplift All uplift 100 lb or less at joint(s) 2, 22, 23, 24, 25, 19, 18, 17, 16, 14
Max Grav All reactions 250 lb or less at joint(s) 2, 20, 22, 23, 24, 25, 19, 18, 17, 16, 14

**FORCES.** (lb) - Max. Comp./Max. Ten. - All forces 250 (lb) or less except when shown.

**NOTES-**
1) Unbalanced roof live loads have been considered for this design.
2) Wind: ASCE 7-16; Vult=115mph (3-second gust) Vasd=91mph; TCDL=6.0psf; BCDL=6.0psf; h=15ft; Cat. II; Exp C; Enclosed; MWFRS (envelope) gable end zone and C-C Corner(3E) -0-11-0 to 2-4-0, Exterior(2N) 2-4-0 to 10-4-0, Corner(3R) 10-4-0 to 13-4-0, Exterior(2N) 13-4-0 to 21-7-0 zone; cantilever left and right exposed ; end vertical left and right exposed;C-C for members and forces & MWFRS for reactions shown; Lumber DOL=1.60 plate grip DOL=1.60
3) Truss designed for wind loads in the plane of the truss only. For studs exposed to wind (normal to the face), see Standard Industry Gable End Details as applicable, or consult qualified building designer as per ANSI/TPI 1.
4) All plates are 2x4 MT20 unless otherwise indicated.
5) Gable requires continuous bottom chord bearing.
6) Gable studs spaced at 2-0-0 oc.
7) This truss has been designed for a 10.0 psf bottom chord live load nonconcurrent with any other live loads.
8) * This truss has been designed for a live load of 20.0psf on the bottom chord in all areas where a rectangle 3-6-0 tall by 2-0-0 wide will fit between the bottom chord and any other members.
9) Provide mechanical connection (by others) of truss to bearing plate capable of withstanding 100 lb uplift at joint(s) 2, 22, 23, 24, 25, 19, 18, 17, 16, 14.
10) This truss is designed in accordance with the 2018 International Residential Code sections R502.11.1 and R802.10.2 and referenced standard ANSI/TPI 1.

STATE OF MISSOURI
SCOTT M. SEVIER
NUMBER PE-2001018807
PROFESSIONAL ENGINEER

February 5,2021



MiTek
16023 Swingley Ridge Rd
Chesterfield, MO 63017

| Job | Truss | Truss Type | Qty | Ply | Summit/100 Stoney |
|---|---|---|---|---|---|
| 2623880 | M6 | Common | 5 | 1 | I44681448 |

Job Reference (optional)

Builders FirstSource (Valley Center), Valley Center, KS - 67147, 8.240 s Mar 9 2020 MiTek Industries, Inc. Thu Feb 4 15:19:51 2021 Page 1

ID:VPVqvFnP0P0b1j2tZnOqezdKbx-CcvR4bj?FVxYlj9Wo0YaQEm3Z0urFgQbrQ5lEGzoU26

**RELEASE FOR CONSTRUCTION**
**AS NOTED ON PLANS REVIEW**
**DEVELOPMENT SERVICES**
**LEE'S SUMMIT, MISSOURI**
**02/11/2021**

| | | | | | | |
|---|---|---|---|---|---|---|
| 7-9-12 | 15-4-0 | 22-10-4 | 30-8-0 | 31-7-0 |
| 7-9-12 | 7-6-4 | 7-6-4 | 7-9-12 | 0-11-0 |

Scale = 1:52.1

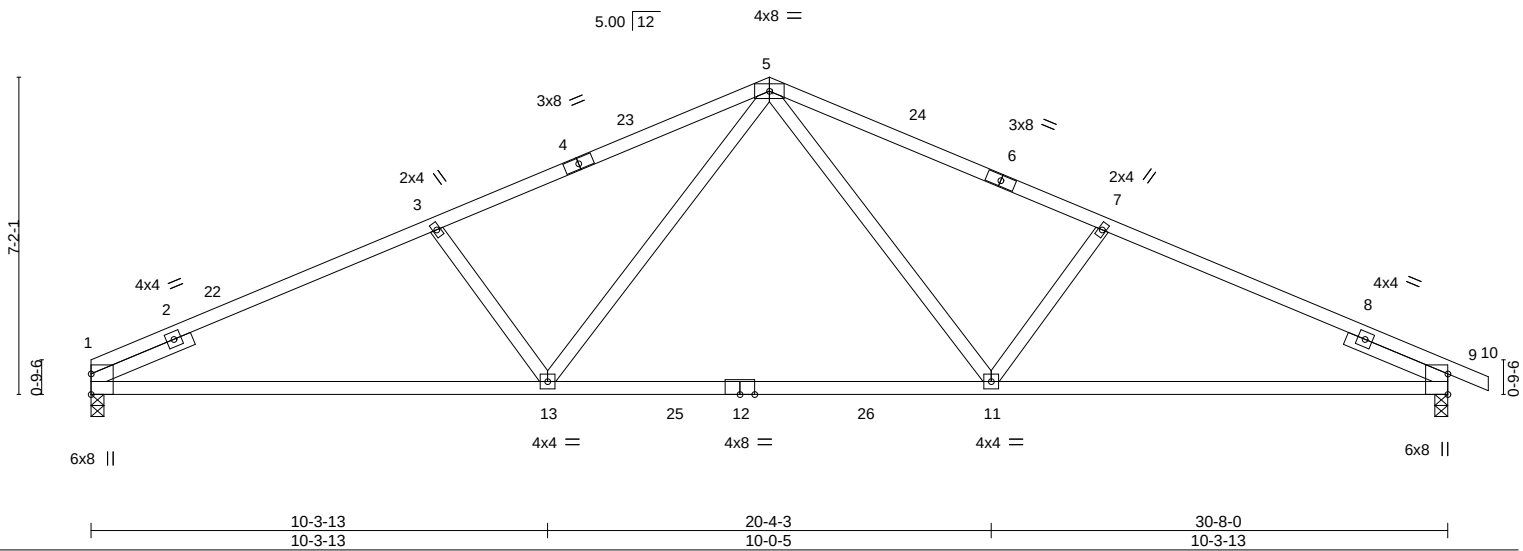


| LOADING (psf) | | | SPACING- | 2-0-0 | CSI. | | DEFL. | in | (loc) | l/defl | L/d | PLATES | GRIP |
|---|---|---|---|---|---|---|---|---|---|---|---|---|---|
| TCLL | 25.0 | | Plate Grip DOL | 1.15 | TC | 0.81 | Vert(LL) | -0.46 | 11-13 | >805 | 240 | MT20 | 197/144 |
| TCDL | 10.0 | | Lumber DOL | 1.15 | BC | 0.83 | Vert(CT) | -0.72 | 11-13 | >511 | 180 | | |
| BCLL | 0.0 | * | Rep Stress Incr | YES | WB | 0.21 | Horz(CT) | 0.11 | 9 | n/a | n/a | | |
| BCDL | 10.0 | | Code IRC2018/TPI2014 | | Matrix-AS | | | | | | | Weight: 109 lb | FT = 20% |

**LUMBER-**
TOP CHORD 2x4 SPF No.2
BOT CHORD 2x4 SPF 1650F 1.5E
WEBS 2x4 SPF No.2
SLIDER Left 2x4 SPF No.2 2-6-0, Right 2x4 SPF No.2 2-6-0

**BRACING-**
TOP CHORD Structural wood sheathing directly applied.
BOT CHORD Rigid ceiling directly applied.

**REACTIONS.** (size) 1=0-3-8, 9=0-3-8
Max Horz 1=-113(LC 17)
Max Uplift 1=-121(LC 12), 9=-139(LC 13)
Max Grav 1=1450(LC 2), 9=1504(LC 2)

**FORCES.** (lb) - Max. Comp./Max. Ten. - All forces 250 (lb) or less except when shown.
TOP CHORD 1-3=-2584/243, 3-5=-2385/236, 5-7=-2382/230, 7-9=-2580/242
BOT CHORD 1-13=-242/2324, 11-13=-58/1645, 9-11=-134/2319
WEBS 5-11=-86/851, 7-11=-477/231, 5-13=-87/856, 3-13=-481/231

**NOTES-**
1) Unbalanced roof live loads have been considered for this design.
2) Wind: ASCE 7-16; Vult=115mph (3-second gust) Vasd=91mph; TCDL=6.0psf; BCDL=6.0psf; h=15ft; Cat. II; Exp C; Enclosed; MWFRS (envelope) gable end zone and C-C Exterior(2E) 0-0-0 to 3-0-0, Interior(1) 3-0-0 to 15-4-0, Exterior(2R) 15-4-0 to 18-4-0, Interior(1) 18-4-0 to 31-7-0 zone; cantilever left and right exposed ; end vertical left and right exposed;C-C for members and forces & MWFRS for reactions shown; Lumber DOL=1.60 plate grip DOL=1.60
3) This truss has been designed for a 10.0 psf bottom chord live load nonconcurrent with any other live loads.
4) * This truss has been designed for a live load of 20.0psf on the bottom chord in all areas where a rectangle 3-6-0 tall by 2-0-0 wide will fit between the bottom chord and any other members, with BCDL = 10.0psf.
5) Provide mechanical connection (by others) of truss to bearing plate capable of withstanding 100 lb uplift at joint(s) except (jt=lb) 1=121, 9=139.
6) This truss is designed in accordance with the 2018 International Residential Code sections R502.11.1 and R802.10.2 and referenced standard ANSI/TPI 1.
7) This truss design requires that a minimum of 7/16" structural wood sheathing be applied directly to the top chord and 1/2" gypsum sheetrock be applied directly to the bottom chord.


February 5,2021



MiTek
16023 Swingley Ridge Rd
Chesterfield, MO 63017

| Job | Truss | Truss Type | Qty | Ply | Summit/100 Stoney |
|---|---|---|---|---|---|
| 2623880 | P1 | Monopitch | 4 | 1 | I44681449 |

Job Reference (optional)

RELEASE FOR CONSTRUCTION
AS NOTED ON PLANS REVIEW
DEVELOPMENT SERVICES
LEE'S SUMMIT, MISSOURI
02/11/2021

Builders FirstSource (Valley Center), Valley Center, KS - 67147, 8.240 s Mar 9 2020 MiTek Industries, Inc. Thu Feb 4 15:19:52 2021 Page 1
ID:VPVqvFnP0P0b1jZtZrlOqezdKbx-goTpHxjd0o3PNtkjMk3pyRIMAQMi_Axk44qJmizoU25

-0-11-0 / 0-11-0 — 5-9-12 / 5-9-12

Scale = 1:22.1

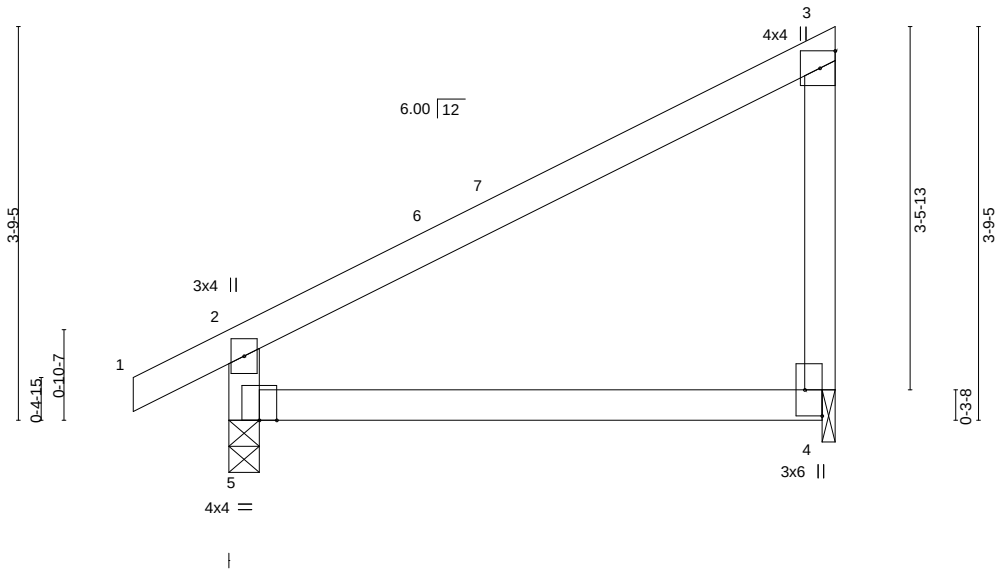


Plate Offsets (X,Y)-- [4:Edge,0-2-0]

| LOADING (psf) | | SPACING- 2-0-0 | | CSI. | | DEFL. in (loc) l/defl L/d | | PLATES | GRIP |
|---|---|---|---|---|---|---|---|---|---|
| TCLL | 25.0 | Plate Grip DOL | 1.15 | TC | 0.31 | Vert(LL) -0.03 4-5 >999 240 | | MT20 | 197/144 |
| TCDL | 10.0 | Lumber DOL | 1.15 | BC | 0.21 | Vert(CT) -0.06 4-5 >999 180 | | | |
| BCLL | 0.0 * | Rep Stress Incr | YES | WB | 0.00 | Horz(CT) 0.00 4 n/a n/a | | | |
| BCDL | 10.0 | Code IRC2018/TPI2014 | | Matrix-AS | | | | Weight: 19 lb | FT = 20% |

**LUMBER-**
TOP CHORD 2x4 SPF No.2
BOT CHORD 2x4 SPF No.2
WEBS 2x4 SPF No.2

**BRACING-**
TOP CHORD Structural wood sheathing directly applied, except end verticals.
BOT CHORD Rigid ceiling directly applied.

**REACTIONS.** (size) 5=0-3-8, 4=0-1-8
Max Horz 5=134(LC 9)
Max Uplift 5=-39(LC 12), 4=-52(LC 12)
Max Grav 5=330(LC 1), 4=241(LC 1)

**FORCES.** (lb) - Max. Comp./Max. Ten. - All forces 250 (lb) or less except when shown.
TOP CHORD 2-5=-292/194

**NOTES-**
1) Wind: ASCE 7-16; Vult=115mph (3-second gust) Vasd=91mph; TCDL=6.0psf; BCDL=6.0psf; h=15ft; Cat. II; Exp C; Enclosed; MWFRS (envelope) gable end zone and C-C Exterior(2E) -0-11-0 to 2-1-0, Interior(1) 2-1-0 to 5-8-0 zone; cantilever left and right exposed ; end vertical left and right exposed;C-C for members and forces & MWFRS for reactions shown; Lumber DOL=1.60 plate grip DOL=1.60
2) This truss has been designed for a 10.0 psf bottom chord live load nonconcurrent with any other live loads.
3) * This truss has been designed for a live load of 20.0psf on the bottom chord in all areas where a rectangle 3-6-0 tall by 2-0-0 wide will fit between the bottom chord and any other members.
4) Bearing at joint(s) 5, 4 considers parallel to grain value using ANSI/TPI 1 angle to grain formula. Building designer should verify capacity of bearing surface.
5) Provide mechanical connection (by others) of truss to bearing plate at joint(s) 4.
6) Provide mechanical connection (by others) of truss to bearing plate capable of withstanding 100 lb uplift at joint(s) 5, 4.
7) This truss is designed in accordance with the 2018 International Residential Code sections R502.11.1 and R802.10.2 and referenced standard ANSI/TPI 1.
8) This truss design requires that a minimum of 7/16" structural wood sheathing be applied directly to the top chord and 1/2" gypsum sheetrock be applied directly to the bottom chord.

STATE OF MISSOURI
SCOTT M. SEVIER
NUMBER PE-2001018807
PROFESSIONAL ENGINEER

February 5,2021



MiTek
16023 Swingley Ridge Rd
Chesterfield, MO 63017

| Job | Truss | Truss Type | Qty | Ply | Summit/100 Stoney |
|---|---|---|---|---|---|
| 2623880 | V1 | Valley | 1 | 1 | I44681450 |
| | | | | | Job Reference (optional) |

RELEASE FOR CONSTRUCTION
AS NOTED ON PLANS REVIEW
DEVELOPMENT SERVICES
LEE'S SUMMIT, MISSOURI
02/11/2021

Builders FirstSource (Valley Center), Valley Center, KS - 67147, 8.240 s Mar 9 2020 MiTek Industries, Inc. Thu Feb 4 15:19:53 2021 Page 1
ID:VPVqvFnP0P0b1j2tZrlOqezdKbx-9_1BVHkGn6BG?1JvvRa2VfrWwqiljdJuJkasJ9zoU24

5-9-8 | 11-7-1
5-9-8 | 5-9-8

Scale = 1:21.0

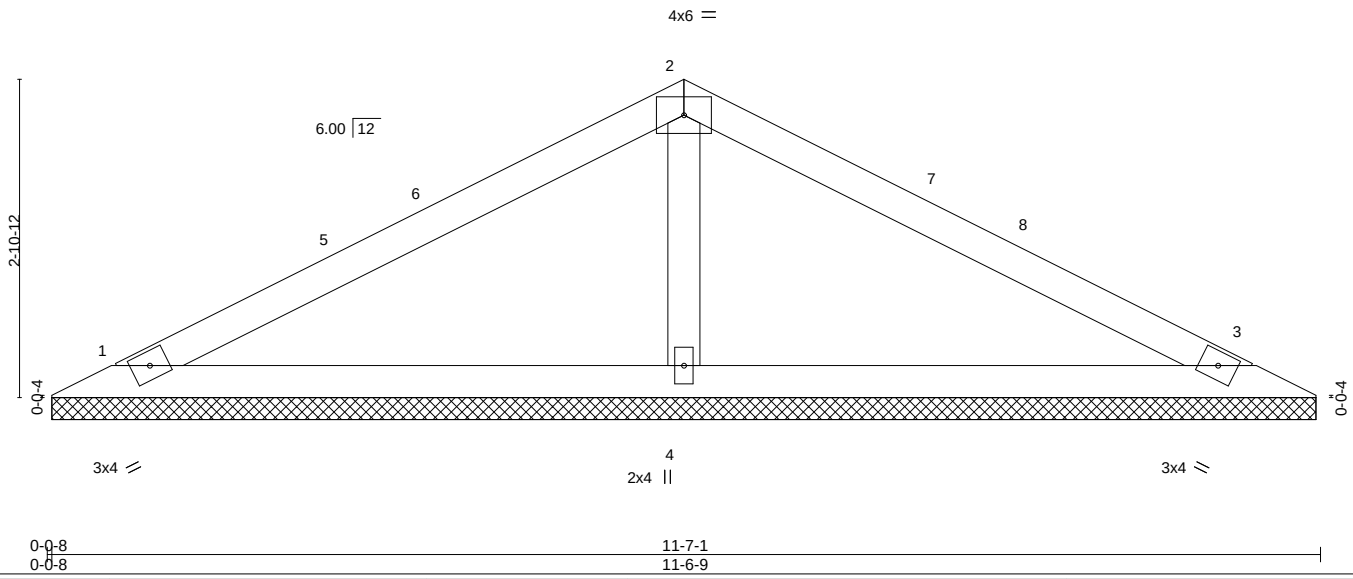


| LOADING (psf) | | SPACING- 2-0-0 | | CSI. | | DEFL. in (loc) l/defl L/d | | PLATES | GRIP |
|---|---|---|---|---|---|---|---|---|---|
| TCLL | 25.0 | Plate Grip DOL | 1.15 | TC | 0.38 | Vert(LL) n/a - n/a 999 | | MT20 | 197/144 |
| TCDL | 10.0 | Lumber DOL | 1.15 | BC | 0.22 | Vert(CT) n/a - n/a 999 | | | |
| BCLL | 0.0 * | Rep Stress Incr | YES | WB | 0.06 | Horz(CT) 0.00 3 n/a n/a | | | |
| BCDL | 10.0 | Code IRC2018/TPI2014 | | Matrix-S | | | | Weight: 29 lb | FT = 20% |

**LUMBER-**
TOP CHORD 2x4 SPF No.2
BOT CHORD 2x4 SPF No.2
OTHERS 2x4 SPF No.2

**BRACING-**
TOP CHORD Structural wood sheathing directly applied or 6-0-0 oc purlins.
BOT CHORD Rigid ceiling directly applied or 10-0-0 oc bracing.

**REACTIONS.** (size) 1=11-6-1, 3=11-6-1, 4=11-6-1
Max Horz 1=41(LC 16)
Max Uplift 1=-33(LC 12), 3=-41(LC 13), 4=-13(LC 12)
Max Grav 1=215(LC 25), 3=215(LC 26), 4=506(LC 1)

**FORCES.** (lb) - Max. Comp./Max. Ten. - All forces 250 (lb) or less except when shown.
WEBS 2-4=-350/169

**NOTES-**
1) Unbalanced roof live loads have been considered for this design.
2) Wind: ASCE 7-16; Vult=115mph (3-second gust) Vasd=91mph; TCDL=6.0psf; BCDL=6.0psf; h=15ft; Cat. II; Exp C; Enclosed; MWFRS (envelope) gable end zone and C-C Exterior(2E) 0-7-9 to 3-7-9, Interior(1) 3-7-9 to 5-9-8, Exterior(2R) 5-9-8 to 8-9-8, Interior(1) 8-9-8 to 10-11-8 zone; cantilever left and right exposed ; end vertical left and right exposed;C-C for members and forces & MWFRS for reactions shown; Lumber DOL=1.60 plate grip DOL=1.60
3) Gable requires continuous bottom chord bearing.
4) This truss has been designed for a 10.0 psf bottom chord live load nonconcurrent with any other live loads.
5) * This truss has been designed for a live load of 20.0psf on the bottom chord in all areas where a rectangle 3-6-0 tall by 2-0-0 wide will fit between the bottom chord and any other members.
6) Provide mechanical connection (by others) of truss to bearing plate capable of withstanding 100 lb uplift at joint(s) 1, 3, 4.
7) This truss is designed in accordance with the 2018 International Residential Code sections R502.11.1 and R802.10.2 and referenced standard ANSI/TPI 1.


February 5,2021



MiTek
16023 Swingley Ridge Rd
Chesterfield, MO 63017

| Job | Truss | Truss Type | Qty | Ply | Summit/100 Stoney |
|---|---|---|---|---|---|
| 2623880 | V2 | Valley | 1 | 1 | I44681451 |

Job Reference (optional)

RELEASE FOR CONSTRUCTION
AS NOTED ON PLANS REVIEW
DEVELOPMENT SERVICES
LEE'S SUMMIT, MISSOURI
02/11/2021

Builders FirstSource (Valley Center), Valley Center, KS - 67147, 8.240 s Mar 9 2020 MiTek Industries, Inc. Thu Feb 4 15:19:56 2021 Page 1
ID:VPVqvFnP0P0b1j2tZrlOqezdKbx-ZZiK7Im841ZrsV2UbZ7m7HT4D1mcwzWK?hoWvUzoU21

3-9-8 | 7-7-1
3-9-8 | 3-9-8

Scale = 1:14.6

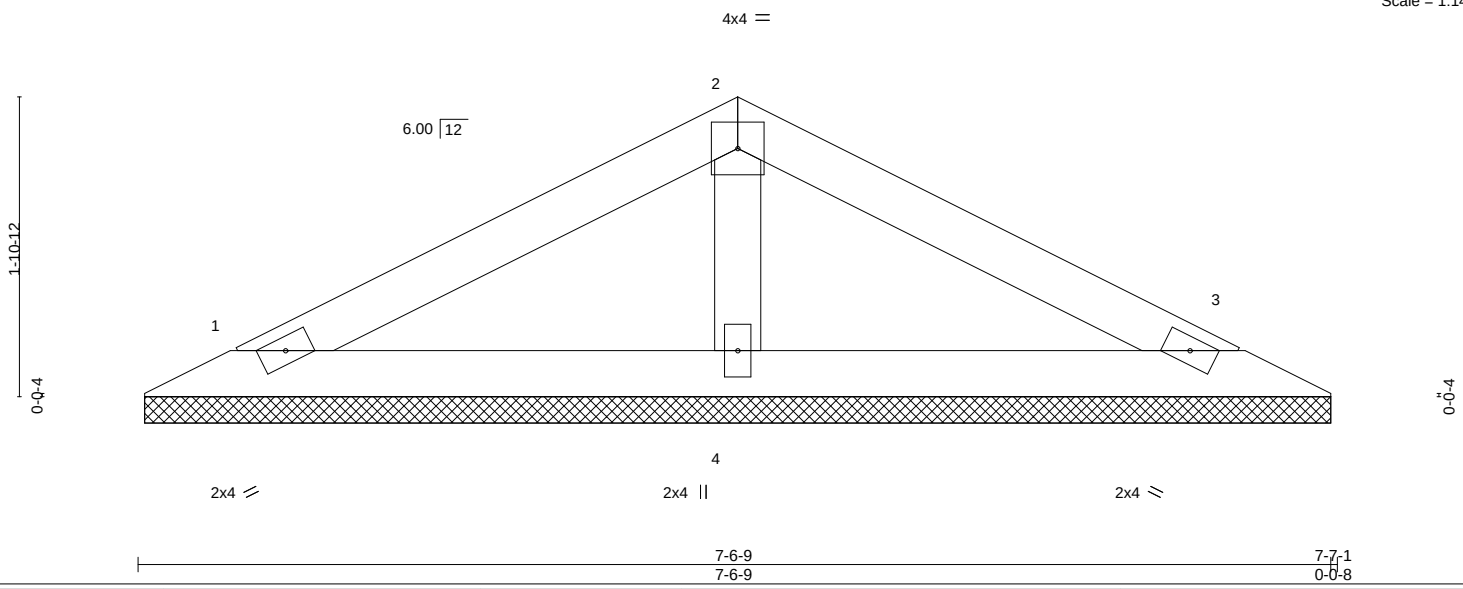


| LOADING (psf) | | SPACING- 2-0-0 | | CSI. | | DEFL. in (loc) l/defl L/d | | PLATES | GRIP |
|---|---|---|---|---|---|---|---|---|---|
| TCLL | 25.0 | Plate Grip DOL | 1.15 | TC | 0.18 | Vert(LL) n/a - n/a 999 | | MT20 | 197/144 |
| TCDL | 10.0 | Lumber DOL | 1.15 | BC | 0.08 | Vert(CT) n/a - n/a 999 | | | |
| BCLL | 0.0 * | Rep Stress Incr | YES | WB | 0.03 | Horz(CT) 0.00 3 n/a n/a | | | |
| BCDL | 10.0 | Code IRC2018/TPI2014 | | Matrix-P | | | | Weight: 18 lb | FT = 20% |

**LUMBER-**
TOP CHORD 2x4 SPF No.2
BOT CHORD 2x4 SPF No.2
OTHERS 2x4 SPF No.2

**BRACING-**
TOP CHORD Structural wood sheathing directly applied or 6-0-0 oc purlins.
BOT CHORD Rigid ceiling directly applied or 10-0-0 oc bracing.

**REACTIONS.** (size) 1=7-6-1, 3=7-6-1, 4=7-6-1
Max Horz 1=25(LC 16)
Max Uplift 1=-26(LC 12), 3=-31(LC 13)
Max Grav 1=145(LC 1), 3=145(LC 1), 4=279(LC 1)

**FORCES.** (lb) - Max. Comp./Max. Ten. - All forces 250 (lb) or less except when shown.

**NOTES-**
1) Unbalanced roof live loads have been considered for this design.
2) Wind: ASCE 7-16; Vult=115mph (3-second gust) Vasd=91mph; TCDL=6.0psf; BCDL=6.0psf; h=15ft; Cat. II; Exp C; Enclosed; MWFRS (envelope) gable end zone and C-C Exterior(2E) zone; cantilever left and right exposed ; end vertical left and right exposed;C-C for members and forces & MWFRS for reactions shown; Lumber DOL=1.60 plate grip DOL=1.60
3) Gable requires continuous bottom chord bearing.
4) This truss has been designed for a 10.0 psf bottom chord live load nonconcurrent with any other live loads.
5) * This truss has been designed for a live load of 20.0psf on the bottom chord in all areas where a rectangle 3-6-0 tall by 2-0-0 wide will fit between the bottom chord and any other members.
6) Provide mechanical connection (by others) of truss to bearing plate capable of withstanding 100 lb uplift at joint(s) 1, 3.
7) This truss is designed in accordance with the 2018 International Residential Code sections R502.11.1 and R802.10.2 and referenced standard ANSI/TPI 1.

STATE OF MISSOURI
SCOTT M. SEVIER
NUMBER PE-2001018807
PROFESSIONAL ENGINEER

February 5,2021



MiTek
16023 Swingley Ridge Rd
Chesterfield, MO 63017

| Job | Truss | Truss Type | Qty | Ply | Summit/100 Stoney |
|---|---|---|---|---|---|
| 2623880 | V3 | Valley | 1 | 1 | I44681452 |

Job Reference (optional)

RELEASE FOR CONSTRUCTION
AS NOTED ON PLANS REVIEW
DEVELOPMENT SERVICES
LEE'S SUMMIT, MISSOURI
02/11/2021

Builders FirstSource (Valley Center), Valley Center, KS - 67147, 8.240 s Mar 9 2020 MiTek Industries, Inc. Thu Feb 4 15:19:56 2021 Page 1
ID:VPVqvFnP0P0b1j2tZrlOqezdKbx-ZZiK7Im841ZrsV2UbZ7m7HT6Y1n4wzwK?hoWvUzoU21

Scale = 1:7.2

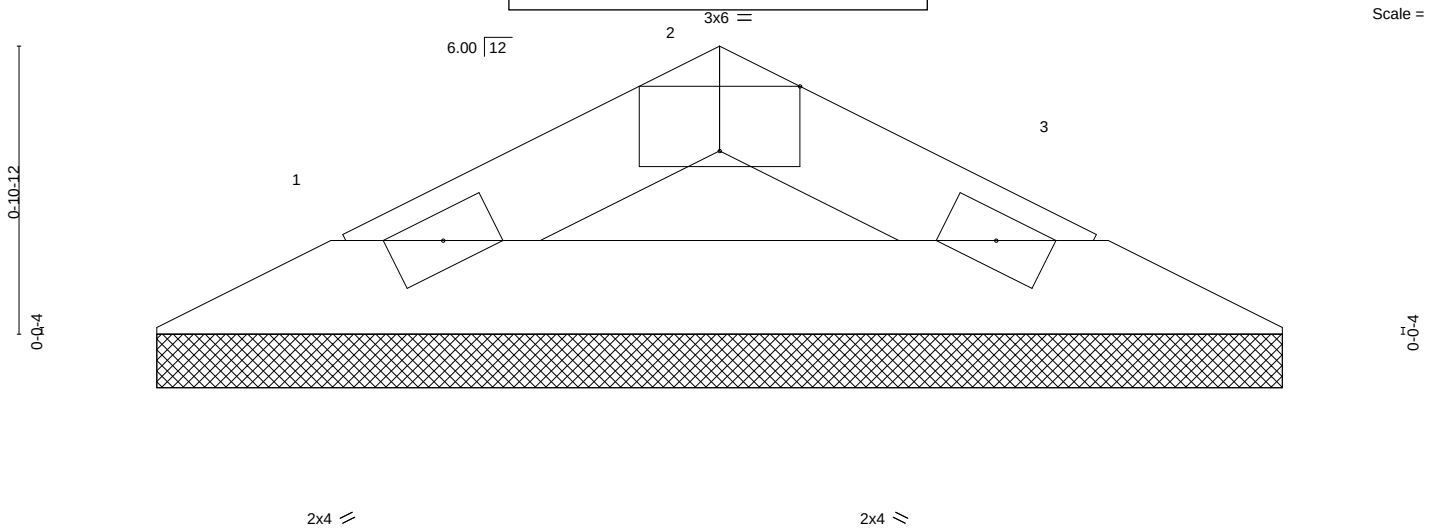


Plate Offsets (X,Y)-- [2:0-3-0,Edge]

| LOADING (psf) | | SPACING- 2-0-0 | | CSI. | | DEFL. in (loc) l/defl L/d | | PLATES | GRIP |
|---|---|---|---|---|---|---|---|---|---|
| TCLL | 25.0 | Plate Grip DOL | 1.15 | TC | 0.03 | Vert(LL) n/a - n/a 999 | | MT20 | 197/144 |
| TCDL | 10.0 | Lumber DOL | 1.15 | BC | 0.05 | Vert(CT) n/a - n/a 999 | | | |
| BCLL | 0.0 * | Rep Stress Incr | YES | WB | 0.00 | Horz(CT) 0.00 3 n/a n/a | | | |
| BCDL | 10.0 | Code IRC2018/TPI2014 | | Matrix-P | | | | Weight: 7 lb | FT = 20% |

**LUMBER-**
TOP CHORD 2x4 SPF No.2
BOT CHORD 2x4 SPF No.2

**BRACING-**
TOP CHORD Structural wood sheathing directly applied or 3-7-1 oc purlins.
BOT CHORD Rigid ceiling directly applied or 10-0-0 oc bracing.

**REACTIONS.** (size) 1=3-6-1, 3=3-6-1
Max Horz 1=-9(LC 13)
Max Uplift 1=-9(LC 12), 3=-9(LC 13)
Max Grav 1=105(LC 1), 3=105(LC 1)

**FORCES.** (lb) - Max. Comp./Max. Ten. - All forces 250 (lb) or less except when shown.

**NOTES-**
1) Unbalanced roof live loads have been considered for this design.
2) Wind: ASCE 7-16; Vult=115mph (3-second gust) Vasd=91mph; TCDL=6.0psf; BCDL=6.0psf; h=15ft; Cat. II; Exp C; Enclosed; MWFRS (envelope) gable end zone and C-C Exterior(2E) zone; cantilever left and right exposed ; end vertical left and right exposed;C-C for members and forces & MWFRS for reactions shown; Lumber DOL=1.60 plate grip DOL=1.60
3) Gable requires continuous bottom chord bearing.
4) This truss has been designed for a 10.0 psf bottom chord live load nonconcurrent with any other live loads.
5) * This truss has been designed for a live load of 20.0psf on the bottom chord in all areas where a rectangle 3-6-0 tall by 2-0-0 wide will fit between the bottom chord and any other members.
6) Provide mechanical connection (by others) of truss to bearing plate capable of withstanding 100 lb uplift at joint(s) 1, 3.
7) This truss is designed in accordance with the 2018 International Residential Code sections R502.11.1 and R802.10.2 and referenced standard ANSI/TPI 1.

STATE OF MISSOURI
SCOTT M. SEVIER
NUMBER PE-2001018807
PROFESSIONAL ENGINEER

February 5,2021



MiTek
16023 Swingley Ridge Rd
Chesterfield, MO 63017

| Job | Truss | Truss Type | Qty | Ply | Summit/100 Stoney |
|---|---|---|---|---|---|
| 2623880 | V4 | Valley | 1 | 1 | I44681453 |

Job Reference (optional)

RELEASE FOR CONSTRUCTION
AS NOTED ON PLANS REVIEW
DEVELOPMENT SERVICES
LEE'S SUMMIT, MISSOURI
02/11/2021

Builders FirstSource (Valley Center), Valley Center, KS - 67147, 8.240 s Mar 9 2020 MiTek Industries, Inc. Thu Feb 4 15:19:57 2021 Page 1
ID:VPVqvFnP0P0b1j2tZrlOqezdKbx-1lGiLenmrLhiTecg8Hf?fV0DOR6LfQATDLY4SwzoU20

4-2-11
4-2-11

Scale = 1:13.4

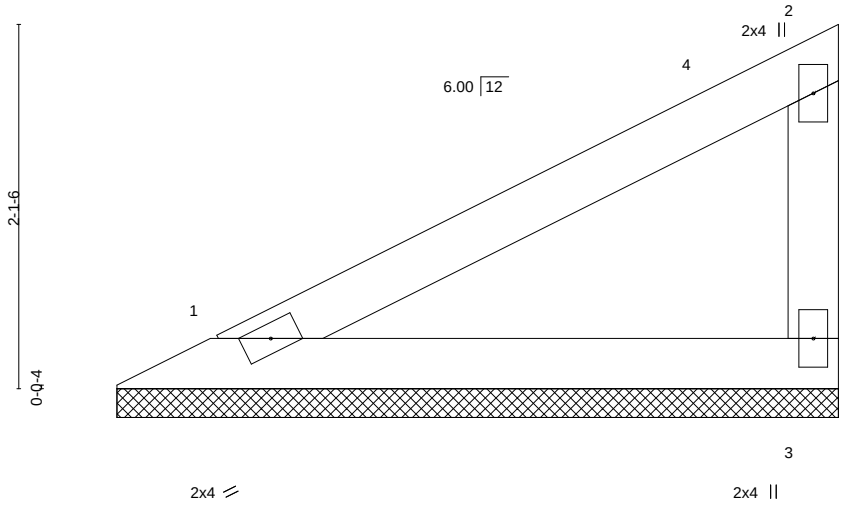


| LOADING (psf) | | | SPACING- | 2-0-0 | CSI. | | DEFL. | in | (loc) | l/defl | L/d | PLATES | GRIP |
|---|---|---|---|---|---|---|---|---|---|---|---|---|---|
| TCLL | 25.0 | | Plate Grip DOL | 1.15 | TC | 0.22 | Vert(LL) | n/a | - | n/a | 999 | MT20 | 197/144 |
| TCDL | 10.0 | | Lumber DOL | 1.15 | BC | 0.12 | Vert(CT) | n/a | - | n/a | 999 | | |
| BCLL | 0.0 | * | Rep Stress Incr | YES | WB | 0.00 | Horz(CT) | 0.00 | 3 | n/a | n/a | | |
| BCDL | 10.0 | | Code IRC2018/TPI2014 | | Matrix-P | | | | | | | Weight: 11 lb | FT = 20% |

**LUMBER-**
TOP CHORD 2x4 SPF No.2
BOT CHORD 2x4 SPF No.2
WEBS 2x4 SPF No.2

**BRACING-**
TOP CHORD Structural wood sheathing directly applied or 4-2-11 oc purlins, except end verticals.
BOT CHORD Rigid ceiling directly applied or 10-0-0 oc bracing.

**REACTIONS.** (size) 1=4-2-3, 3=4-2-3
Max Horz 1=65(LC 9)
Max Uplift 1=-14(LC 12), 3=-30(LC 12)
Max Grav 1=155(LC 1), 3=155(LC 1)

**FORCES.** (lb) - Max. Comp./Max. Ten. - All forces 250 (lb) or less except when shown.

**NOTES-**
1) Wind: ASCE 7-16; Vult=115mph (3-second gust) Vasd=91mph; TCDL=6.0psf; BCDL=6.0psf; h=15ft; Cat. II; Exp C; Enclosed; MWFRS (envelope) gable end zone and C-C Exterior(2E) 0-7-9 to 3-7-9, Interior(1) 3-7-9 to 4-0-15 zone; cantilever left and right exposed ; end vertical left and right exposed;C-C for members and forces & MWFRS for reactions shown; Lumber DOL=1.60 plate grip DOL=1.60
2) Gable requires continuous bottom chord bearing.
3) This truss has been designed for a 10.0 psf bottom chord live load nonconcurrent with any other live loads.
4) * This truss has been designed for a live load of 20.0psf on the bottom chord in all areas where a rectangle 3-6-0 tall by 2-0-0 wide will fit between the bottom chord and any other members.
5) Provide mechanical connection (by others) of truss to bearing plate capable of withstanding 100 lb uplift at joint(s) 1, 3.
6) This truss is designed in accordance with the 2018 International Residential Code sections R502.11.1 and R802.10.2 and referenced standard ANSI/TPI 1.


February 5,2021



MiTek
16023 Swingley Ridge Rd
Chesterfield, MO 63017

| Job | Truss | Truss Type | Qty | Ply | Summit/100 Stoney |
|---|---|---|---|---|---|
| 2623880 | V5 | Valley | 1 | 1 | I44681454 |

Job Reference (optional)

RELEASE FOR CONSTRUCTION
AS NOTED ON PLANS REVIEW
DEVELOPMENT SERVICES
LEE'S SUMMIT, MISSOURI
02/11/2021

Builders FirstSource (Valley Center), Valley Center, KS - 67147, 8.240 s Mar 9 2020 MiTek Industries, Inc. Thu Feb 4 15:19:58 2021 Page 1
ID:VPVqvFnP0P0b1j2tZrlOqezdKbx-Vyq4Y_oOcepZ5oBti_AECiYRjrSzOtQdS?Hd_MzoU2?

2-6-11
2-6-11

Scale = 1:9.2

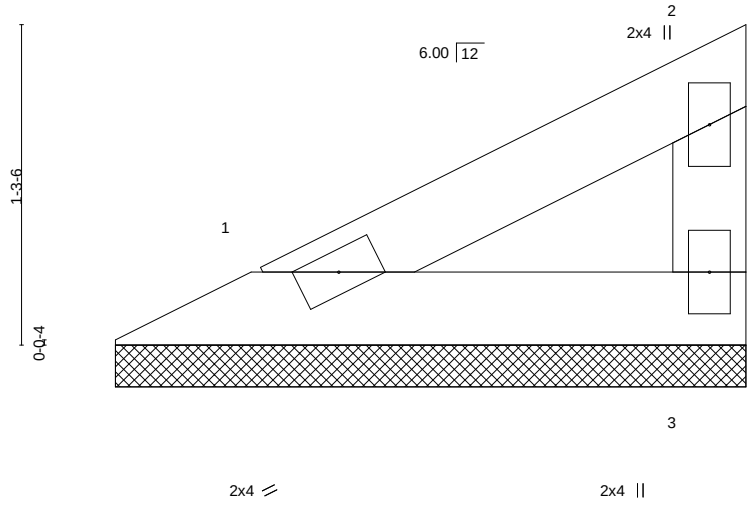


| LOADING (psf) | | | SPACING- 2-0-0 | | CSI. | | DEFL. in (loc) l/defl L/d | | PLATES GRIP |
|---|---|---|---|---|---|---|---|---|---|
| TCLL | 25.0 | | Plate Grip DOL | 1.15 | TC | 0.05 | Vert(LL) n/a - n/a 999 | | MT20 197/144 |
| TCDL | 10.0 | | Lumber DOL | 1.15 | BC | 0.03 | Vert(CT) n/a - n/a 999 | | |
| BCLL | 0.0 | * | Rep Stress Incr | YES | WB | 0.00 | Horz(CT) 0.00 3 n/a n/a | | |
| BCDL | 10.0 | | Code IRC2018/TPI2014 | | Matrix-P | | | | Weight: 6 lb FT = 20% |

**LUMBER-**
TOP CHORD 2x4 SPF No.2
BOT CHORD 2x4 SPF No.2
WEBS 2x4 SPF No.2

**BRACING-**
TOP CHORD Structural wood sheathing directly applied or 2-6-11 oc purlins, except end verticals.
BOT CHORD Rigid ceiling directly applied or 10-0-0 oc bracing.

**REACTIONS.** (size) 1=2-6-3, 3=2-6-3
Max Horz 1=34(LC 9)
Max Uplift 1=-7(LC 12), 3=-16(LC 12)
Max Grav 1=80(LC 1), 3=80(LC 1)

**FORCES.** (lb) - Max. Comp./Max. Ten. - All forces 250 (lb) or less except when shown.

**NOTES-**
1) Wind: ASCE 7-16; Vult=115mph (3-second gust) Vasd=91mph; TCDL=6.0psf; BCDL=6.0psf; h=15ft; Cat. II; Exp C; Enclosed; MWFRS (envelope) gable end zone and C-C Exterior(2E) zone; cantilever left and right exposed ; end vertical left and right exposed;C-C for members and forces & MWFRS for reactions shown; Lumber DOL=1.60 plate grip DOL=1.60
2) Gable requires continuous bottom chord bearing.
3) This truss has been designed for a 10.0 psf bottom chord live load nonconcurrent with any other live loads.
4) * This truss has been designed for a live load of 20.0psf on the bottom chord in all areas where a rectangle 3-6-0 tall by 2-0-0 wide will fit between the bottom chord and any other members.
5) Provide mechanical connection (by others) of truss to bearing plate capable of withstanding 100 lb uplift at joint(s) 1, 3.
6) This truss is designed in accordance with the 2018 International Residential Code sections R502.11.1 and R802.10.2 and referenced standard ANSI/TPI 1.

STATE OF MISSOURI
SCOTT M. SEVIER
NUMBER
PE-2001018807
PROFESSIONAL ENGINEER

February 5,2021



MiTek
16023 Swingley Ridge Rd
Chesterfield, MO 63017

| Job | Truss | Truss Type | Qty | Ply | Summit/100 Stoney |
|---|---|---|---|---|---|
| 2623880 | V6 | Valley | 1 | 1 | I44681455 |

Job Reference (optional)

RELEASE FOR CONSTRUCTION
AS NOTED ON PLANS REVIEW
DEVELOPMENT SERVICES
LEE'S SUMMIT, MISSOURI
02/11/2021

Builders FirstSource (Valley Center), Valley Center, KS - 67147, 8.240 s Mar 9 2020 MiTek Industries, Inc. Thu Feb 4 15:19:59 2021 Page 1
ID:VPVqvFnP0P0b1j2tZrIOqezdKbx-z8OSmKp0NyxPjym3GihTkw5cSFoB7Kgmhf1BWozoU2_

2-6-14
2-6-14

Scale = 1:9.2

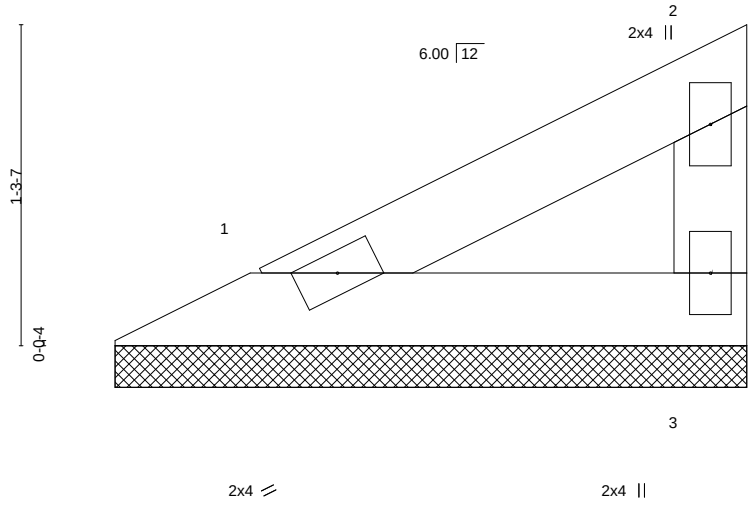


| LOADING (psf) | | | SPACING- 2-0-0 | | CSI. | | DEFL. in (loc) l/defl L/d | | | | | PLATES | GRIP |
|---|---|---|---|---|---|---|---|---|---|---|---|---|---|
| TCLL | 25.0 | | Plate Grip DOL | 1.15 | TC | 0.05 | Vert(LL) | n/a | - | n/a | 999 | MT20 | 197/144 |
| TCDL | 10.0 | | Lumber DOL | 1.15 | BC | 0.03 | Vert(CT) | n/a | - | n/a | 999 | | |
| BCLL | 0.0 | * | Rep Stress Incr | YES | WB | 0.00 | Horz(CT) | 0.00 | 3 | n/a | n/a | | |
| BCDL | 10.0 | | Code IRC2018/TPI2014 | | Matrix-P | | | | | | | Weight: 6 lb | FT = 20% |

**LUMBER-**
TOP CHORD 2x4 SPF No.2
BOT CHORD 2x4 SPF No.2
WEBS 2x4 SPF No.2

**BRACING-**
TOP CHORD Structural wood sheathing directly applied or 2-6-14 oc purlins, except end verticals.
BOT CHORD Rigid ceiling directly applied or 10-0-0 oc bracing.

**REACTIONS.** (size) 1=2-6-6, 3=2-6-6
Max Horz 1=34(LC 9)
Max Uplift 1=-7(LC 12), 3=-16(LC 12)
Max Grav 1=81(LC 1), 3=81(LC 1)

**FORCES.** (lb) - Max. Comp./Max. Ten. - All forces 250 (lb) or less except when shown.

**NOTES-**
1) Wind: ASCE 7-16; Vult=115mph (3-second gust) Vasd=91mph; TCDL=6.0psf; BCDL=6.0psf; h=15ft; Cat. II; Exp C; Enclosed; MWFRS (envelope) gable end zone and C-C Exterior(2E) zone; cantilever left and right exposed ; end vertical left and right exposed;C-C for members and forces & MWFRS for reactions shown; Lumber DOL=1.60 plate grip DOL=1.60
2) Gable requires continuous bottom chord bearing.
3) This truss has been designed for a 10.0 psf bottom chord live load nonconcurrent with any other live loads.
4) * This truss has been designed for a live load of 20.0psf on the bottom chord in all areas where a rectangle 3-6-0 tall by 2-0-0 wide will fit between the bottom chord and any other members.
5) Provide mechanical connection (by others) of truss to bearing plate capable of withstanding 100 lb uplift at joint(s) 1, 3.
6) This truss is designed in accordance with the 2018 International Residential Code sections R502.11.1 and R802.10.2 and referenced standard ANSI/TPI 1.

STATE OF MISSOURI
SCOTT M. SEVIER
NUMBER PE-2001018807
PROFESSIONAL ENGINEER

February 5,2021



MiTek
16023 Swingley Ridge Rd
Chesterfield, MO 63017

| Job | Truss | Truss Type | Qty | Ply | Summit/100 Stoney |
|---|---|---|---|---|---|
| 2623880 | V7 | Valley | 1 | 1 | I44681456 |

Job Reference (optional)

RELEASE FOR CONSTRUCTION
AS NOTED ON PLANS REVIEW
DEVELOPMENT SERVICES
LEE'S SUMMIT, MISSOURI
02/11/2021

Builders FirstSource (Valley Center), Valley Center, KS - 67147, 8.240 s Mar 9 2020 MiTek Industries, Inc. Thu Feb 4 15:19:59 2021 Page 1
ID:VPVqvFnP0P0b1j2tZrlOqezdKbx-z8OSmKp0NyxPjym3GihTkw5ZsFno7Kgmhf1BWozoU2_

4-2-14
4-2-14

Scale = 1:13.4

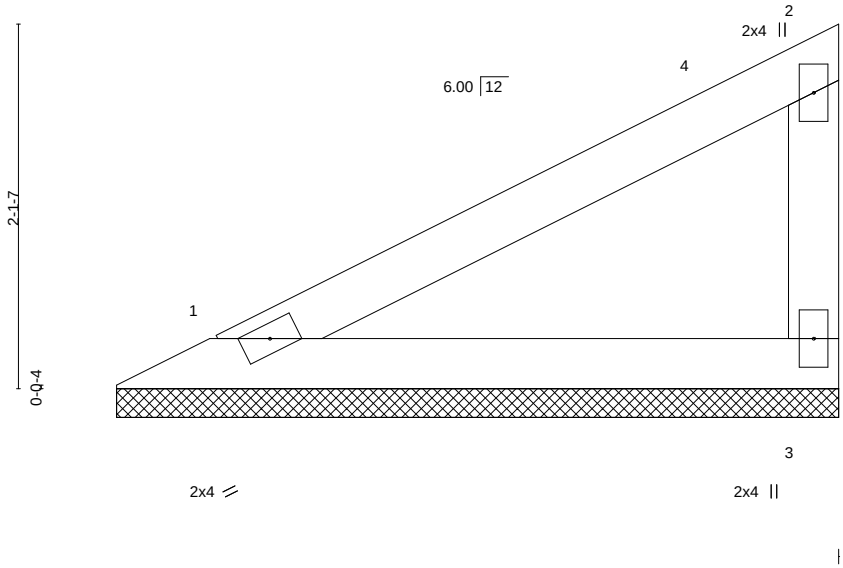


| LOADING (psf) | | | SPACING- | 2-0-0 | CSI. | | DEFL. | in | (loc) | l/defl | L/d | PLATES | GRIP |
|---|---|---|---|---|---|---|---|---|---|---|---|---|---|
| TCLL | 25.0 | | Plate Grip DOL | 1.15 | TC | 0.22 | Vert(LL) | n/a | - | n/a | 999 | MT20 | 197/144 |
| TCDL | 10.0 | | Lumber DOL | 1.15 | BC | 0.12 | Vert(CT) | n/a | - | n/a | 999 | | |
| BCLL | 0.0 | * | Rep Stress Incr | YES | WB | 0.00 | Horz(CT) | 0.00 | 3 | n/a | n/a | | |
| BCDL | 10.0 | | Code IRC2018/TPI2014 | | Matrix-P | | | | | | | Weight: 11 lb | FT = 20% |

**LUMBER-**
TOP CHORD 2x4 SPF No.2
BOT CHORD 2x4 SPF No.2
WEBS 2x4 SPF No.2

**BRACING-**
TOP CHORD Structural wood sheathing directly applied or 4-2-14 oc purlins, except end verticals.
BOT CHORD Rigid ceiling directly applied or 10-0-0 oc bracing.

**REACTIONS.** (size) 1=4-2-6, 3=4-2-6
Max Horz 1=65(LC 9)
Max Uplift 1=-14(LC 12), 3=-30(LC 12)
Max Grav 1=156(LC 1), 3=156(LC 1)

**FORCES.** (lb) - Max. Comp./Max. Ten. - All forces 250 (lb) or less except when shown.

**NOTES-**
1) Wind: ASCE 7-16; Vult=115mph (3-second gust) Vasd=91mph; TCDL=6.0psf; BCDL=6.0psf; h=15ft; Cat. II; Exp C; Enclosed; MWFRS (envelope) gable end zone and C-C Exterior(2E) 0-7-9 to 3-7-9, Interior(1) 3-7-9 to 4-1-2 zone; cantilever left and right exposed ; end vertical left and right exposed;C-C for members and forces & MWFRS for reactions shown; Lumber DOL=1.60 plate grip DOL=1.60
2) Gable requires continuous bottom chord bearing.
3) This truss has been designed for a 10.0 psf bottom chord live load nonconcurrent with any other live loads.
4) * This truss has been designed for a live load of 20.0psf on the bottom chord in all areas where a rectangle 3-6-0 tall by 2-0-0 wide will fit between the bottom chord and any other members.
5) Provide mechanical connection (by others) of truss to bearing plate capable of withstanding 100 lb uplift at joint(s) 1, 3.
6) This truss is designed in accordance with the 2018 International Residential Code sections R502.11.1 and R802.10.2 and referenced standard ANSI/TPI 1.


February 5,2021



MiTek
16023 Swingley Ridge Rd
Chesterfield, MO 63017

| Job | Truss | Truss Type | Qty | Ply | Summit/100 Stoney |
|---|---|---|---|---|---|
| 2623880 | V8 | Valley | 1 | 1 | I44681457 |
| | | | | | Job Reference (optional) |

RELEASE FOR CONSTRUCTION
AS NOTED ON PLANS REVIEW
DEVELOPMENT SERVICES
LEE'S SUMMIT, MISSOURI
02/11/2021

Builders FirstSource (Valley Center), Valley Center, KS - 67147, 8.240 s Mar 9 2020 MiTek Industries, Inc. Thu Feb 4 15:20:00 2021 Page 1
ID:VPVqvFnP0P0b1j2tZrlOqezdKbx-RKyqzgqf8G3GK6LFqPCiH7divf69snzvwJmk1FzoU1z

9-8-9
9-8-9

Scale = 1:27.8

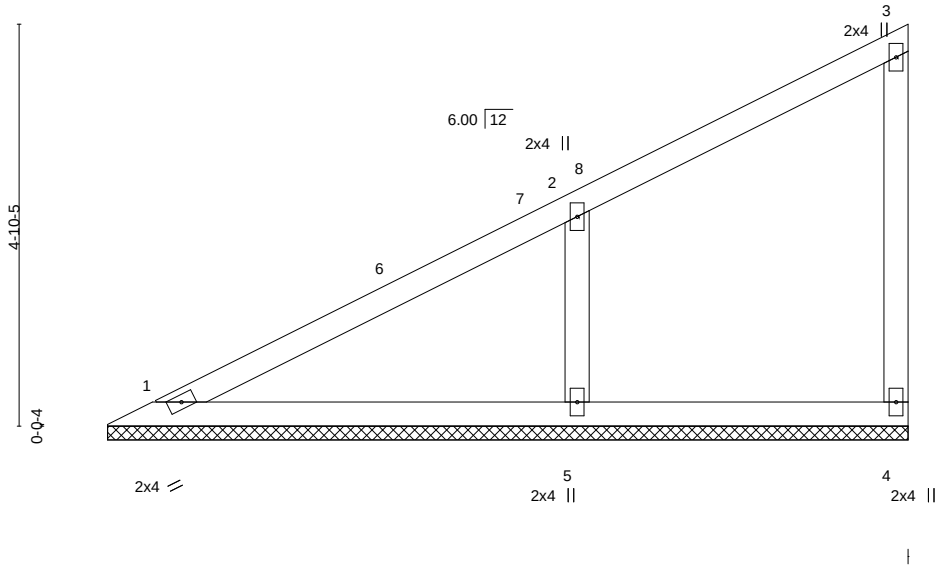


| LOADING (psf) | | | SPACING- 2-0-0 | | CSI. | | DEFL. | in | (loc) | l/defl | L/d | PLATES | GRIP |
|---|---|---|---|---|---|---|---|---|---|---|---|---|---|
| TCLL | 25.0 | | Plate Grip DOL | 1.15 | TC | 0.33 | Vert(LL) | n/a | - | n/a | 999 | MT20 | 197/144 |
| TCDL | 10.0 | | Lumber DOL | 1.15 | BC | 0.17 | Vert(CT) | n/a | - | n/a | 999 | | |
| BCLL | 0.0 | * | Rep Stress Incr | YES | WB | 0.06 | Horz(CT) | -0.00 | 4 | n/a | n/a | | |
| BCDL | 10.0 | | Code IRC2018/TPI2014 | | Matrix-S | | | | | | | Weight: 30 lb | FT = 20% |

**LUMBER-**
TOP CHORD 2x4 SPF No.2
BOT CHORD 2x4 SPF No.2
WEBS 2x4 SPF No.2
OTHERS 2x4 SPF No.2

**BRACING-**
TOP CHORD Structural wood sheathing directly applied or 6-0-0 oc purlins, except end verticals.
BOT CHORD Rigid ceiling directly applied or 10-0-0 oc bracing.

**REACTIONS.** (size) 1=9-8-1, 4=9-8-1, 5=9-8-1
Max Horz 1=167(LC 11)
Max Uplift 4=-22(LC 9), 5=-97(LC 12)
Max Grav 1=185(LC 1), 4=115(LC 1), 5=504(LC 1)

**FORCES.** (lb) - Max. Comp./Max. Ten. - All forces 250 (lb) or less except when shown.
WEBS 2-5=-381/241

**NOTES-**
1) Wind: ASCE 7-16; Vult=115mph (3-second gust) Vasd=91mph; TCDL=6.0psf; BCDL=6.0psf; h=15ft; Cat. II; Exp C; Enclosed; MWFRS (envelope) gable end zone and C-C Exterior(2E) 0-7-9 to 3-7-9, Interior(1) 3-7-9 to 9-6-13 zone; cantilever left and right exposed ; end vertical left and right exposed;C-C for members and forces & MWFRS for reactions shown; Lumber DOL=1.60 plate grip DOL=1.60
2) Gable requires continuous bottom chord bearing.
3) This truss has been designed for a 10.0 psf bottom chord live load nonconcurrent with any other live loads.
4) * This truss has been designed for a live load of 20.0psf on the bottom chord in all areas where a rectangle 3-6-0 tall by 2-0-0 wide will fit between the bottom chord and any other members.
5) Provide mechanical connection (by others) of truss to bearing plate capable of withstanding 100 lb uplift at joint(s) 4, 5.
6) This truss is designed in accordance with the 2018 International Residential Code sections R502.11.1 and R802.10.2 and referenced standard ANSI/TPI 1.

STATE OF MISSOURI
SCOTT M. SEVIER
NUMBER
PE-2001018807
PROFESSIONAL ENGINEER

February 5,2021



MiTek
16023 Swingley Ridge Rd
Chesterfield, MO 63017

| Job | Truss | Truss Type | Qty | Ply | Summit/100 Stoney |
|---|---|---|---|---|---|
| 2623880 | V9 | Valley | 1 | 1 | I44681458 |

Job Reference (optional)

RELEASE FOR CONSTRUCTION
AS NOTED ON PLANS REVIEW
DEVELOPMENT SERVICES
LEE'S SUMMIT, MISSOURI
02/11/2021

Builders FirstSource (Valley Center), Valley Center, KS - 67147, 8.240 s Mar 9 2020 MiTek Industries, Inc. Thu Feb 4 15:20:01 2021 Page 1
ID:VPVqvFnP0P0b1j2tZrlOqezdKbx-wXWDA0qHvZB7yGwRN6jxqLAvN2TMbEW38zWHahzoU1y

8-0-9
8-0-9

Scale = 1:23.0

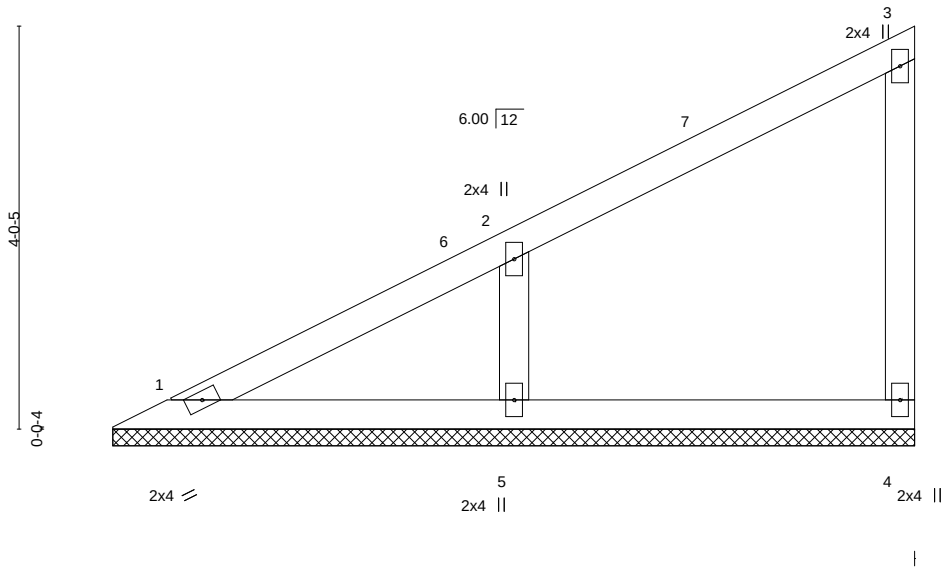


| LOADING (psf) | | | SPACING- 2-0-0 | | CSI. | | DEFL. | in | (loc) | l/defl | L/d | PLATES | GRIP |
|---|---|---|---|---|---|---|---|---|---|---|---|---|---|
| TCLL | 25.0 | | Plate Grip DOL | 1.15 | TC | 0.22 | Vert(LL) | n/a | - | n/a | 999 | MT20 | 197/144 |
| TCDL | 10.0 | | Lumber DOL | 1.15 | BC | 0.11 | Vert(CT) | n/a | - | n/a | 999 | | |
| BCLL | 0.0 | * | Rep Stress Incr | YES | WB | 0.04 | Horz(CT) | -0.00 | 4 | n/a | n/a | | |
| BCDL | 10.0 | | Code IRC2018/TPI2014 | | Matrix-P | | | | | | | Weight: 24 lb | FT = 20% |

**LUMBER-**
TOP CHORD 2x4 SPF No.2
BOT CHORD 2x4 SPF No.2
WEBS 2x4 SPF No.2
OTHERS 2x4 SPF No.2

**BRACING-**
TOP CHORD Structural wood sheathing directly applied or 6-0-0 oc purlins, except end verticals.
BOT CHORD Rigid ceiling directly applied or 10-0-0 oc bracing.

**REACTIONS.** (size) 1=8-0-1, 4=8-0-1, 5=8-0-1
Max Horz 1=136(LC 9)
Max Uplift 4=-20(LC 9), 5=-90(LC 12)
Max Grav 1=115(LC 20), 4=135(LC 1), 5=410(LC 1)

**FORCES.** (lb) - Max. Comp./Max. Ten. - All forces 250 (lb) or less except when shown.
WEBS 2-5=-319/234

**NOTES-**
1) Wind: ASCE 7-16; Vult=115mph (3-second gust) Vasd=91mph; TCDL=6.0psf; BCDL=6.0psf; h=15ft; Cat. II; Exp C; Enclosed; MWFRS (envelope) gable end zone and C-C Exterior(2E) 0-7-9 to 3-7-9, Interior(1) 3-7-9 to 7-10-13 zone; cantilever left and right exposed ; end vertical left and right exposed;C-C for members and forces & MWFRS for reactions shown; Lumber DOL=1.60 plate grip DOL=1.60
2) Gable requires continuous bottom chord bearing.
3) This truss has been designed for a 10.0 psf bottom chord live load nonconcurrent with any other live loads.
4) * This truss has been designed for a live load of 20.0psf on the bottom chord in all areas where a rectangle 3-6-0 tall by 2-0-0 wide will fit between the bottom chord and any other members.
5) Provide mechanical connection (by others) of truss to bearing plate capable of withstanding 100 lb uplift at joint(s) 4, 5.
6) This truss is designed in accordance with the 2018 International Residential Code sections R502.11.1 and R802.10.2 and referenced standard ANSI/TPI 1.


February 5,2021



MiTek
16023 Swingley Ridge Rd
Chesterfield, MO 63017

| Job | Truss | Truss Type | Qty | Ply | Summit/100 Stoney |
|---|---|---|---|---|---|
| 2623880 | V10 | Valley | 1 | 1 | I44681459 |

RELEASE FOR CONSTRUCTION
AS NOTED ON PLANS REVIEW
DEVELOPMENT SERVICES
LEE'S SUMMIT, MISSOURI
02/11/2021

Job Reference (optional)

Builders FirstSource (Valley Center), Valley Center, KS - 67147, 8.240 s Mar 9 2020 MiTek Industries, Inc. Thu Feb 4 15:19:53 2021 Page 1
ID:VPVqvFnP0P0b1j2tZrlOqezdKbx-9_1BVHkGn6BG?1JvvRa2VfrZiqkBjdbuJkasJ9zoU24

3-7-15 6-4-9
3-7-15 2-8-10

Scale = 1:18.7

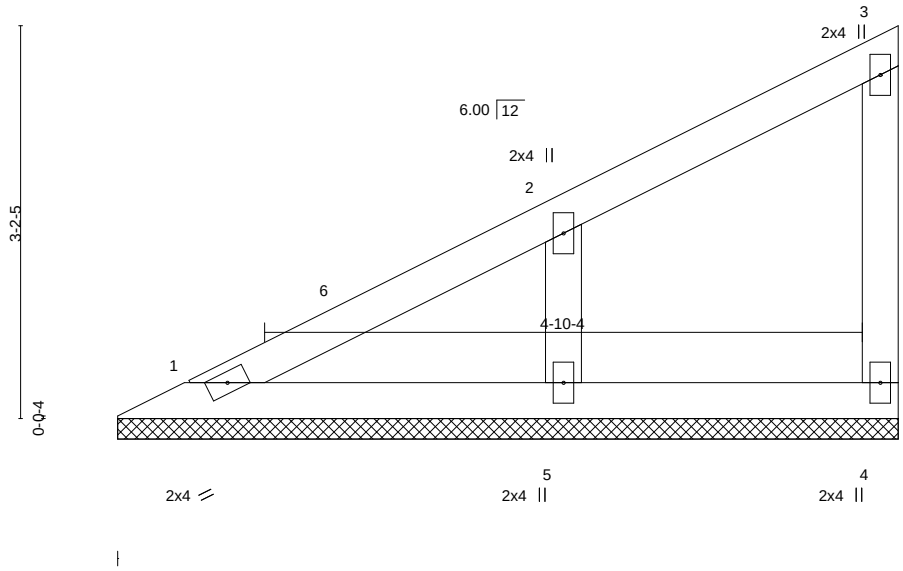


| LOADING (psf) | | | SPACING- 2-0-0 | | CSI. | | DEFL. | in | (loc) | l/defl | L/d | PLATES | GRIP |
|---|---|---|---|---|---|---|---|---|---|---|---|---|---|
| TCLL | 25.0 | | Plate Grip DOL | 1.15 | TC | 0.13 | Vert(LL) | n/a | - | n/a | 999 | MT20 | 197/144 |
| TCDL | 10.0 | | Lumber DOL | 1.15 | BC | 0.07 | Vert(CT) | n/a | - | n/a | 999 | | |
| BCLL | 0.0 | * | Rep Stress Incr | YES | WB | 0.04 | Horz(CT) | 0.00 | 4 | n/a | n/a | | |
| BCDL | 10.0 | | Code IRC2018/TPI2014 | | Matrix-P | | | | | | | Weight: 19 lb | FT = 20% |

**LUMBER-**
TOP CHORD 2x4 SPF No.2
BOT CHORD 2x4 SPF No.2
WEBS 2x4 SPF No.2

**BRACING-**
TOP CHORD Structural wood sheathing directly applied or 6-0-0 oc purlins, except end verticals.
BOT CHORD Rigid ceiling directly applied or 10-0-0 oc bracing.

**REACTIONS.** (size) 1=6-4-1, 4=6-4-1, 5=6-4-1
Max Horz 1=105(LC 9)
Max Uplift 4=-14(LC 9), 5=-77(LC 12)
Max Grav 1=107(LC 1), 4=81(LC 1), 5=317(LC 1)

**FORCES.** (lb) - Max. Comp./Max. Ten. - All forces 250 (lb) or less except when shown.

**NOTES-**
1) Wind: ASCE 7-16; Vult=115mph (3-second gust) Vasd=91mph; TCDL=6.0psf; BCDL=6.0psf; h=15ft; Cat. II; Exp C; Enclosed; MWFRS (envelope) gable end zone and C-C Exterior(2E) 0-7-9 to 3-7-15, Interior(1) 3-7-15 to 6-2-13 zone; cantilever left and right exposed ; end vertical left and right exposed;C-C for members and forces & MWFRS for reactions shown; Lumber DOL=1.60 plate grip DOL=1.60
2) Gable requires continuous bottom chord bearing.
3) This truss has been designed for a 10.0 psf bottom chord live load nonconcurrent with any other live loads.
4) * This truss has been designed for a live load of 20.0psf on the bottom chord in all areas where a rectangle 3-6-0 tall by 2-0-0 wide will fit between the bottom chord and any other members.
5) Provide mechanical connection (by others) of truss to bearing plate capable of withstanding 100 lb uplift at joint(s) 4, 5.
6) This truss is designed in accordance with the 2018 International Residential Code sections R502.11.1 and R802.10.2 and referenced standard ANSI/TPI 1.


February 5,2021



MiTek
16023 Swingley Ridge Rd
Chesterfield, MO 63017

| Job | Truss | Truss Type | Qty | Ply | Summit/100 Stoney |
|---|---|---|---|---|---|
| 2623880 | V11 | Valley | 1 | 1 | I44681460 |

Job Reference (optional)

RELEASE FOR CONSTRUCTION
AS NOTED ON PLANS REVIEW
DEVELOPMENT SERVICES
LEE'S SUMMIT, MISSOURI
02/11/2021

Builders FirstSource (Valley Center), Valley Center, KS - 67147, 8.240 s Mar 9 2020 MiTek Industries, Inc. Thu Feb 4 15:19:54 2021 Page 1
ID:VPVqvFnP0P0b1j2tZrIOqezdKbx-dBbZidluYQJ7cBu5T85H1sOi1E31S4R1XNJQrbzoU23

4-8-9

Scale = 1:14.6

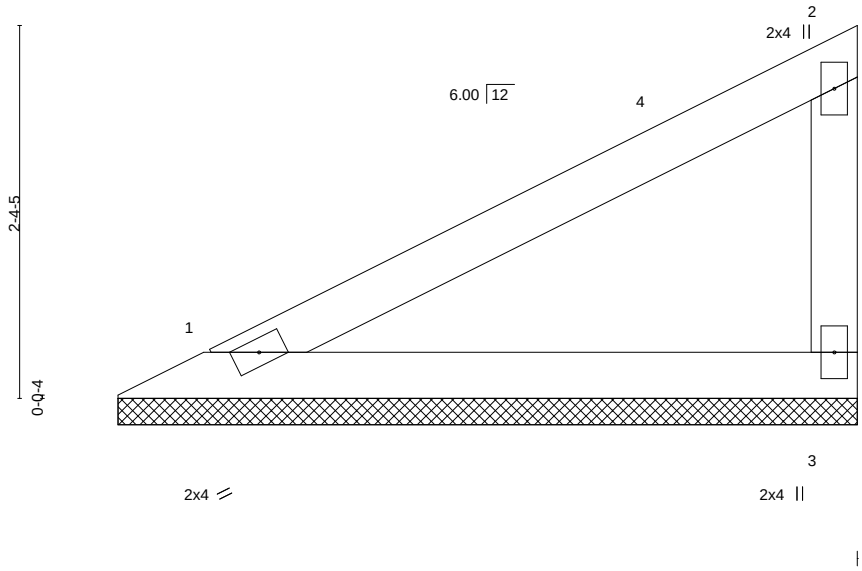


| LOADING (psf) | | | SPACING- 2-0-0 | | CSI. | | DEFL. in (loc) l/defl L/d | | PLATES | GRIP |
|---|---|---|---|---|---|---|---|---|---|---|
| TCLL | 25.0 | | Plate Grip DOL | 1.15 | TC | 0.29 | Vert(LL) n/a - n/a 999 | | MT20 | 197/144 |
| TCDL | 10.0 | | Lumber DOL | 1.15 | BC | 0.16 | Vert(CT) n/a - n/a 999 | | | |
| BCLL | 0.0 | * | Rep Stress Incr | YES | WB | 0.00 | Horz(CT) 0.00 3 n/a n/a | | | |
| BCDL | 10.0 | | Code IRC2018/TPI2014 | | Matrix-P | | | | Weight: 13 lb | FT = 20% |

**LUMBER-**
TOP CHORD 2x4 SPF No.2
BOT CHORD 2x4 SPF No.2
WEBS 2x4 SPF No.2

**BRACING-**
TOP CHORD Structural wood sheathing directly applied or 4-8-9 oc purlins, except end verticals.
BOT CHORD Rigid ceiling directly applied or 10-0-0 oc bracing.

**REACTIONS.** (size) 1=4-8-1, 3=4-8-1
Max Horz 1=74(LC 9)
Max Uplift 1=-16(LC 12), 3=-34(LC 12)
Max Grav 1=177(LC 1), 3=177(LC 1)

**FORCES.** (lb) - Max. Comp./Max. Ten. - All forces 250 (lb) or less except when shown.

**NOTES-**
1) Wind: ASCE 7-16; Vult=115mph (3-second gust) Vasd=91mph; TCDL=6.0psf; BCDL=6.0psf; h=15ft; Cat. II; Exp C; Enclosed; MWFRS (envelope) gable end zone and C-C Exterior(2E) 0-7-9 to 3-7-9, Interior(1) 3-7-9 to 4-6-13 zone; cantilever left and right exposed ; end vertical left and right exposed;C-C for members and forces & MWFRS for reactions shown; Lumber DOL=1.60 plate grip DOL=1.60
2) Gable requires continuous bottom chord bearing.
3) This truss has been designed for a 10.0 psf bottom chord live load nonconcurrent with any other live loads.
4) * This truss has been designed for a live load of 20.0psf on the bottom chord in all areas where a rectangle 3-6-0 tall by 2-0-0 wide will fit between the bottom chord and any other members.
5) Provide mechanical connection (by others) of truss to bearing plate capable of withstanding 100 lb uplift at joint(s) 1, 3.
6) This truss is designed in accordance with the 2018 International Residential Code sections R502.11.1 and R802.10.2 and referenced standard ANSI/TPI 1.

STATE OF MISSOURI
SCOTT M. SEVIER
NUMBER PE-2001018807
PROFESSIONAL ENGINEER

February 5,2021



MiTek
16023 Swingley Ridge Rd
Chesterfield, MO 63017

| Job | Truss | Truss Type | Qty | Ply | Summit/100 Stoney |
|---|---|---|---|---|---|
| 2623880 | V12 | Valley | 1 | 1 | I44681461 |
| | | | | | Job Reference (optional) |

**RELEASE FOR CONSTRUCTION**
**AS NOTED ON PLANS REVIEW**
**DEVELOPMENT SERVICES**
**LEE'S SUMMIT, MISSOURI**
**02/11/2021**

Builders FirstSource (Valley Center), Valley Center, KS - 67147, 8.240 s Mar 9 2020 MiTek Industries, Inc. Thu Feb 4 15:19:55 2021 Page 1
ID:VPVqvFnP0P0b1j2tZrlOqezdKbx-5N8xwzmWJjR_ELTI1scWa4wwveRyBWhAm13zN1zoU22

3-0-9
3-0-9

Scale = 1:10.4

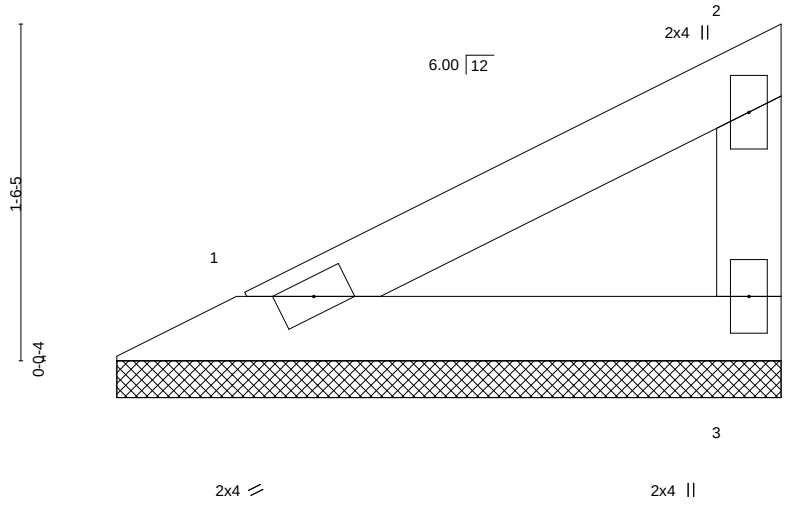


| LOADING (psf) | | | SPACING- | 2-0-0 | CSI. | | DEFL. | in | (loc) | l/defl | L/d | PLATES | GRIP |
|---|---|---|---|---|---|---|---|---|---|---|---|---|---|
| TCLL | 25.0 | | Plate Grip DOL | 1.15 | TC | 0.09 | Vert(LL) | n/a | - | n/a | 999 | MT20 | 197/144 |
| TCDL | 10.0 | | Lumber DOL | 1.15 | BC | 0.05 | Vert(CT) | n/a | - | n/a | 999 | | |
| BCLL | 0.0 | * | Rep Stress Incr | YES | WB | 0.00 | Horz(CT) | 0.00 | 3 | n/a | n/a | | |
| BCDL | 10.0 | | Code IRC2018/TPI2014 | | Matrix-P | | | | | | | Weight: 8 lb | FT = 20% |

**LUMBER-**
TOP CHORD 2x4 SPF No.2
BOT CHORD 2x4 SPF No.2
WEBS 2x4 SPF No.2

**BRACING-**
TOP CHORD Structural wood sheathing directly applied or 3-0-9 oc purlins, except end verticals.
BOT CHORD Rigid ceiling directly applied or 10-0-0 oc bracing.

**REACTIONS.** (size) 1=3-0-1, 3=3-0-1
Max Horz 1=43(LC 9)
Max Uplift 1=-9(LC 12), 3=-20(LC 12)
Max Grav 1=102(LC 1), 3=102(LC 1)

**FORCES.** (lb) - Max. Comp./Max. Ten. - All forces 250 (lb) or less except when shown.

**NOTES-**
1) Wind: ASCE 7-16; Vult=115mph (3-second gust) Vasd=91mph; TCDL=6.0psf; BCDL=6.0psf; h=15ft; Cat. II; Exp C; Enclosed; MWFRS (envelope) gable end zone and C-C Exterior(2E) zone; cantilever left and right exposed ; end vertical left and right exposed;C-C for members and forces & MWFRS for reactions shown; Lumber DOL=1.60 plate grip DOL=1.60
2) Gable requires continuous bottom chord bearing.
3) This truss has been designed for a 10.0 psf bottom chord live load nonconcurrent with any other live loads.
4) * This truss has been designed for a live load of 20.0psf on the bottom chord in all areas where a rectangle 3-6-0 tall by 2-0-0 wide will fit between the bottom chord and any other members.
5) Provide mechanical connection (by others) of truss to bearing plate capable of withstanding 100 lb uplift at joint(s) 1, 3.
6) This truss is designed in accordance with the 2018 International Residential Code sections R502.11.1 and R802.10.2 and referenced standard ANSI/TPI 1.


February 5,2021



MiTek
16023 Swingley Ridge Rd
Chesterfield, MO 63017

# Symbols

## PLATE LOCATION AND ORIENTATION

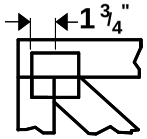


Center plate on joint unless x, y offsets are indicated. Dimensions are in ft-in-sixteenths. Apply plates to both sides of truss and fully embed teeth.

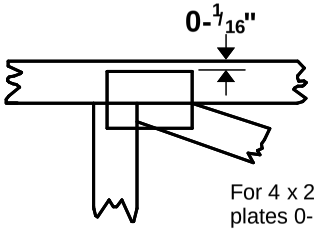


For 4 x 2 orientation, locate plates 0- 1/16" from outside edge of truss.

This symbol indicates the required direction of slots in connector plates.

***Plate location details available in MiTek 20/20 software or upon request.**

## PLATE SIZE

4 X 4

The first dimension is the plate width measured perpendicular to slots. Second dimension is the length parallel to slots.

## LATERAL BRACING LOCATION

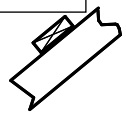

Indicated by symbol shown and/or by text in the bracing section of the output. Use T or I bracing if indicated.

## BEARING

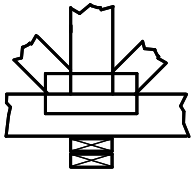

Indicates location where bearings (supports) occur. Icons vary but reaction section indicates joint number where bearings occur. Min size shown is for crushing only.

**Industry Standards:**

ANSI/TPI1: National Design Specification for Metal Plate Connected Wood Truss Construction.
DSB-89: Design Standard for Bracing.
BCSI: Building Component Safety Information, Guide to Good Practice for Handling, Installing & Bracing of Metal Plate Connected Wood Trusses.



# Numbering System

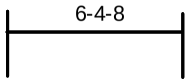


**dimensions shown in ft-in-sixteenths**
(Drawings not to scale)

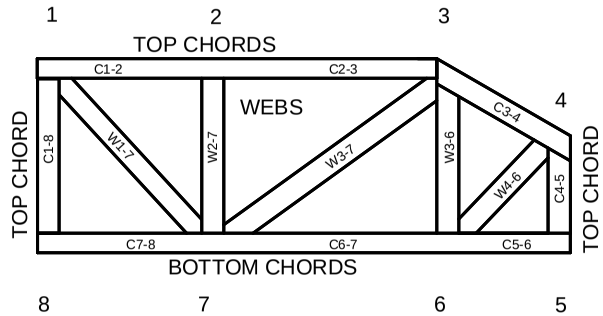


**JOINTS ARE GENERALLY NUMBERED/LETTERED CLOCKWISE AROUND THE TRUSS STARTING AT THE JOINT FARTHEST TO THE LEFT.**

**CHORDS AND WEBS ARE IDENTIFIED BY END JOINT NUMBERS/LETTERS.**

## PRODUCT CODE APPROVALS

ICC-ES Reports:

ESR-1311, ESR-1352, ESR1988
ER-3907, ESR-2362, ESR-1397, ESR-3282

Trusses are designed for wind loads in the plane of the truss unless otherwise shown.

Lumber design values are in accordance with ANSI/TPI 1 section 6.3 These truss designs rely on lumber values established by others.



MiTek Engineering Reference Sheet: MII-7473 rev. 5/19/2020

# General Safety Notes

Failure to Follow Could Cause Property Damage or Personal Injury

1. Additional stability bracing for truss system, e.g. diagonal or X-bracing, is always required. See BCSI.
2. Truss bracing must be designed by an engineer. For wide truss spacing, individual lateral braces themselves may require bracing, or alternative Tor I bracing should be considered.
3. Never exceed the design loading shown and never stack materials on inadequately braced trusses.
4. Provide copies of this truss design to the building designer, erection supervisor, property owner and all other interested parties.
5. Cut members to bear tightly against each other.
6. Place plates on each face of truss at each joint and embed fully. Knots and wane at joint locations are regulated by ANSI/TPI 1.
7. Design assumes trusses will be suitably protected from the environment in accord with ANSI/TPI 1.
8. Unless otherwise noted, moisture content of lumber shall not exceed 19% at time of fabrication.
9. Unless expressly noted, this design is not applicable for use with fire retardant, preservative treated, or green lumber.
10. Camber is a non-structural consideration and is the responsibility of truss fabricator. General practice is to camber for dead load deflection.
11. Plate type, size, orientation and location dimensions indicated are minimum plating requirements.
12. Lumber used shall be of the species and size, and in all respects, equal to or better than that specified.
13. Top chords must be sheathed or purlins provided at spacing indicated on design.
14. Bottom chords require lateral bracing at 10 ft. spacing, or less, if no ceiling is installed, unless otherwise noted.
15. Connections not shown are the responsibility of others.
16. Do not cut or alter truss member or plate without prior approval of an engineer.
17. Install and load vertically unless indicated otherwise.
18. Use of green or treated lumber may pose unacceptable environmental, health or performance risks. Consult with project engineer before use.
19. Review all portions of this design (front, back, words and pictures) before use. Reviewing pictures alone is not sufficient.
20. Design assumes manufacture in accordance with ANSI/TPI 1 Quality Criteria.
21. The design does not take into account any dynamic or other loads other than those expressly stated.