GENERAL NOTES

DESIGN LOADS

1. All design and construction work for this project shall conform to the 2018 edition of the International Building Code (IBC).
2. Design Loads:
   - A. Roof Loads:
     - Dead load ..... 20 psf (Per Existing Drawings)
     - Roof live load ..... 20 psf
     - Ground snow load ..... 20 psf
     - Flat roof snow load (snow drifting additional) ..... 20 psf
     - Snow importance factor ..... Is = 1.0
     - Snow exposure factor ..... Ce = 1.0
     - Thermal factor ..... Ct = 1.0
   - B. Wind Loads:
     - Risk category II
     - Ultimate design wind speed (3 sec gust) ..... 109 mph
     - Service design wind speed (3 sec gust)..... 85 mph
     - Wind exposure ..... B
     - Wind internal pressure coefficient ..... +/-0.18
     - Wind pressure for components and cladding..... 21.9 psf (Ultimate)
   - C. Seismic Loads:
     - 5% Damped mapped acceleration parameter ..... Ss = 0.100
     - 1-Sec period mapped acceleration parameter ..... S1 = 0.068
     - 5% Damped spectral response coefficient ..... Sds = 0.106
     - 1-Sec period spectral response coefficient ..... Sd1 = 0.109
     - Site class ..... D (Assumed)
     - Risk category II
     - Seismic importance factor ..... Ie = 1.0
     - Seismic design category ..... B
3. Shop drawings shall be submitted for review by the Architect and Engineer prior to fabrication.

CONSTRUCTION:

1. Furnish all labor, materials and equipment necessary to complete the work shown or implied by these drawings.
2. The General Contractor shall be responsible for verifying all dimensions and elevations with the Architectural and Mechanical drawings and the existing conditions. Ref Architectural and Mechanical drawings for embedded items not shown herein and to verify size and location of all openings. Before executing work shown herein, the General Contractor shall examine actual job conditions and report to the Engineer any error, omission or difficulty affecting the work.
3. The structure is designed to be self-supporting and stable after erection of the structure has been fully completed. It is the General Contractor's responsibility to determine erection sequencing and provide shoring and bracing as required to erect the structure.
4. The General Contractor shall provide adequate shoring or bracing during construction to resist forces such as wind and unbalanced loading due to construction.
5. Johnston Burkholder Associates, LLC, its employees, and representatives shall not be responsible for, and will not have control of, construction means and methods, techniques, sequences or procedures, or for safety precautions and programs in connection with construction; nor will they be responsible for any failure by the contractor to perform or complete construction in accordance with the contract documents. Jobsite visits by Johnston Burkholder Associates, LLC shall not constitute approval, awareness or liability for any hazardous conditions.
6. The General Contractor shall be responsible for protecting the existing building during construction.
7. Johnston Burkholder Associates assumes responsibility for the design of the new elements and systems shown on these drawings only. Johnston Burkholder Associates has not designed nor reviewed the design of the existing building in areas unaffected by new construction and accepts no responsibility for the structural adequacy or performance of the existing building in areas unaffected by new construction.

CONCRETE:

1. All concrete and reinforcement has been designed in accordance with the American Concrete Institute (ACI) Standard Building Code Requirements for Reinforced Concrete (ACI 318). All concrete work shall conform to the ACI Specifications for Structural Concrete (ACI 301) and the latest applicable recommendations of the ACI Manual of Standard Practice for Detailing Reinforced Concrete (ACI 315).
2. Materials shall conform with:
   - A. Cement-ASTM C150 Type I or II
   - B. Aggregate-ASTM C33
   - C. Water - Potable
3. All concrete used in the work shall have the following properties:
   - A. Footings
     - 3000 psi strength (f'c) at 28 days
     - 0.50 maximum water/cement ratio
     - less than 3% air content
     - 4" ± 1" slump at point of placement
   - B. Interior slabs-on-grade
     - 4000 psi strength (f'c) at 28 days
     - 0.53 maximum water/cement ratio
     - less than 3% air content
     - 4" ± 1" slump at point of placement
   - C. Exterior slabs-on-grade
     - 4000 psi strength (f'c) at 28 days
     - 0.40 maximum water/cement ratio
     - 6% ± 1.5% air content
     - 4" ± 1" slump at point of placement
4. Chlorides in any form or concentration shall not be added to any concrete.

CAST-IN-PLACE CONCRETE-EXECUTION:

1. All concrete is reinforced unless specifically noted as "unreinforced". Reinforce all concrete not otherwise shown with the same steel as shown in similar sections. Comply with ACI 304, "Recommended Practice for Measuring, Mixing, Transporting, and Placing Concrete".
2. Cold weather conditions: When the average daily air temperature for 3 consecutive days is expected to be below 40 deg F and the air temperature does not exceed 50 deg F for more than 12 consecutive hours during this time, all concrete placement shall comply with the provisions of ACI 306 and as herein specified. Protect concrete work from physical damage or reduced strength that could be caused by frost, freezing actions, or low temperatures.
3. Hot weather conditions: When elevated temperatures, humidity, and wind factors exist, all concrete shall comply with the provisions of ACI 305 and as here in specified.
4. Perform curing of concrete by curing and sealing compound, by moist curing, moisture-retaining cover curing, or by combinations thereof.
5. Maintain minimum concrete coverage for reinforcing as indicated unless otherwise noted in the drawings:
   - A. Earth formed/cast directly against soil ..... 3"
   - B. Cast against forms but exposed to earth or weather:
     - a. #6 and larger ..... 2"
     - b. #5 and smaller ..... 1 1/2"
   - C. Slabs and walls not exposed to earth/weather ..... 3/4"
   - D. Other ..... 2"
6. Control joints in slab-on-grade shall be as shown on the drawings. Where not shown, limit controlled areas to not more than 12'-0" on any side. Do not interchange construction and saw joints where a particular joint detail is specified on the drawings. A saw joint must terminate at a construction joint.
7. Coordinate concrete finishes, recessed areas, reveals, embedded items, special joint patterns, etc. with the Architectural drawings and specifications. Provide a 3/4" chamfer at all exposed edges of concrete. No aluminum items shall be embedded in concrete.
8. QUALITY CONTROL TESTING DURING CONSTRUCTION
   - A. General: The Owner shall employ a testing laboratory to perform tests and to submit test reports.
   - B. Sampling and testing for quality control during placement of concrete shall include the following, as directed by the Architect.
   - C. Sampling Fresh Concrete: ASTM C 172, except modified for slump to comply with ASTM C 94.
     - a. Slump: ASTM C 143; one test at point of discharge for each days pour of each type of concrete; additional tests when concrete consistency appears to have changed.
     - b. Air Content: ASTM C 173, volumetric method for lightweight or normal weight concrete; ASTM C 231 pressure method for normal weight concrete; one for each days pour of each type of air-entrained concrete.
     - c. Concrete Temperature: Test hourly when air temperature is 40 deg F (4 deg C) and below, when 80 deg F (27 deg C) and above, and each time a set of compression test specimens is made.
     - d. Compression Test Specimen: ASTM C 31; one set of 4 standard cylinders for each compressive strength test, unless otherwise directed. Mold and store cylinders for laboratory-cured test specimens except when field-cure test specimens are required.
     - e. Compressive Strength Tests: ASTM C 39; one set for each days pour plus additional sets for each 50 cu. yards. more than the first 25 cu. yards. of each concrete class placed in any one day; one specimen tested at 7 days, two specimens tested at 28 days, and one specimen retained in reserve for later testing if required.
       - Strength level of concrete will be considered satisfactory if averages of sets of three consecutive strength test results equal or exceed specified compressive strength, and no individual strength test result falls below specified compressive strength by more than 500 psi.

POST-INSTALLED ANCHORS:

1. Post-installed anchors shall be installed in accordance with the Manufacturers Printed Installation Instructions (MPII). If anchors are to be installed in a horizontal or upward direction personnel shall be trained to install adhesive anchors through the ACI/CRSI Adhesive Anchor Installer Certification Program.
2. Post-installed anchors shall only be used where noted on the drawings. The use of post-installed anchors for repairs requires approval from the Engineer of Record.

STRUCTURAL STEEL:

1. All structural steel shall be ASTM A36 for shapes and plates, ASTM A53 Grade B for pipes, ASTM A500, Grade B or C for rectangular and square HSS members and ASTM 1085 for round HSS members, unless noted otherwise. W shapes shall be ASTM A992 or ASTM A572, Grade 50. Fabrication and erection shall be in accordance with the latest edition of the American Institute of Steel Construction (AISC) Manual of Steel Construction.
2. All welding shall conform to the current American Welding Society Specifications and be performed by certified welders.
3. All structural steel shall have one shop coat of rust inhibitor primer paint conforming to the specifications. Field touch up all unpainted, nicked and welded areas.
4. All unpainted, exterior steel shall be galvanized.
5. No permanent suspended loads are to be supported by metal deck.

STEEL JOISTS AND JOIST GIRDERS:

1. Existing steel joists and joist girders are assumed to be in good condition and in compliance with the Steel Joist Institute Specifications. Any damage to existing joists or joist girders shall be reported prior to adding load to framing.

LIGHT GAGE STEEL FRAMING:

1. All light gage structural joists, studs, track and accessories shall be designed in accordance with the latest edition of the American Iron and Steel Institute (AISI) "Specification for the Design of Cold Formed Steel Structural Members", and shall be of the type, size, gage and spacing shown on the drawings.
2. All 16 gage and heavier studs and joists shall be formed from corrosion-resistant steel corresponding to the requirements of ASTM A1003 or A653, with a minimum yield strength of 50 ksi. All 18 gage and lighter studs, joists, track and accessories shall be formed from corrosion-resistant steel corresponding to the requirements of ASTM A1003 or A653, with a minimum yield strength of 33 ksi.
3. The design and details provided on these drawings are for the final in-place conditions. The General Contractor shall be responsible for temporary bracing, as required, prior to completion of all lateral support systems.
4. Fastening of components shall be with self-drilling screws, powder actuated fasteners (PAF) or welding. Screws and PAF's shall be installed such that a minimum 3/4" on center spacing and 3/4" edge distance is maintained. Fasteners in concrete shall have a minimum spacing of 3".
5. All welding shall be according to the American Welding Society (AWS) D1.3 specification, for "Structural Welding Code - sheet steel"; and shall be performed by certified welders. Consult AWS D19.0, "Welding Zinc Coated Steels" and ANSI standard Z49.1 for information regarding safe welding procedures. Weld sizes shall match the thickness of the thinner part. All welds shall be touched up with a zinc-rich paint on each side of the stud.
6. Prior to fabrication of framing, the General Contractor shall submit fabrication and erection drawings to the Architect/Engineer for review.
7. All framing components shall be cut squarely for attachment to perpendicular members, or, as required, for an angular fit against abutting members. All field cutting shall be done by sawing or shearing.
8. Unless noted otherwise, abutting lengths of track shall be spliced together using a piece of stud of the same width and thickness and (3) #10 screws per flange on each side of the splice.
9. Axially loaded studs shall be installed in a manner which will ensure that their ends are positioned against the inside of the track web prior to fastening. Studs shall be securely fastened to both flanges of the top and bottom track with (1) #10 screw.
10. Wall stud bridging shall be attached in a manner to prevent stud rotation. Bridging rows shall be installed at 4'-0" on center unless otherwise noted on drawings.
11. Wall stud and joist bridging shall be installed at the time of light gage erection. Member punch outs shall be aligned to allow bridging installation.
12. Sheathing shall be attached to the flange of each framing member as noted on the drawings. Where attachment is not noted, a maximum attachment spacing of 12" on center shall be used.
13. Sample Member Designation: 600S162-43:
    - 600 - Web size (6")
    - S - Member type; S - stud, T - track
    - 162 - Flange size (1 5/8")
    - 43 - Member thickness (mils); 33 - 20 gage, 43 - 18 gage, 54 - 16 gage
14. Acceptable Fasteners (UNO): (Substitutions shall be submitted for review)
    - A. Screws:
      - a. Light gage to light gage
        - Buildex TEK
        - Hilti Kwik-Pro
        - Simpson XS or FPHSD
      - b. Light gage Stud/Track to Concrete; 1/4" diameter
        - Simpson Titen HD-Mini
        - Hilti Kwik Con II+
        - Buildex Tapcon
        - Powers Tapper
    - B. Powder Actuated Fasteners (PAF);
      - a. Light gage Stud/Track to Concrete; 0.145" dia x 1" (Minimum)
        - Hilti X-U
        - Simpson PDP
        - Ramset Power Point SP114
      - b. Light gage Stud/Track to Steel, 0.157" diameter with length based on steel thickness
        - Hilti X-U
        - Simpson PDP
15. Prefabricated panels shall be square, with components attached in a manner to prevent racking and minimize distortion while lifting. The General Contractor shall provide temporary bracing where required.

MASONRY:

1. All concrete masonry units shall conform to ASTM C 90 specifications and shall be placed in running bond unless noted otherwise. Concrete masonry units above finished grade shall be either light weight or medium weight density. Concrete masonry units below finished grade shall be fully grouted normal weight density.
2. Concrete masonry shall have a minimum prism compressive strength, f'm, of 2000 psi. Minimum unit compressive strength shall be 1900 psi. All mortar for masonry shall be Type S, mortar cement in accordance with ASTM C 270. Masonry cement is not allowed. Provide mortar bed on web between grouted cell and hollow cell.
3. Masonry grout shall have a 28 day compressive strength of 2000 psi. Masonry Contractor shall submit grout mix design for review prior to construction. Grouted cells shall be placed in low lifts not to exceed 5'-4". High lift grouting may be used if Masonry Contractor submits written procedure to Engineer for review prior to construction of walls. All grouted cells shall be mechanically vibrated using a low energy device not greater than 1" diameter. Do not use concrete vibrator.
4. All reinforcing steel shall meet ASTM A615 Grade 60 or ASTM A706 Grade 60 and located in the center of CMU walls (+- 1/2") unless noted otherwise. Use wire rebar placement devices or other approved means to properly locate and secure reinforcement in place.
5. All bond beams and cells containing reinforcing steel, anchors, embedments, etc. shall be filled with grout. All hollow concrete masonry in contact with earth shall be grouted full.
6. All vertical reinforcement and continuous steel shall be lapped 52 bar diameters (2'-0" minimum) at splices unless noted otherwise on the drawings.
7. The Masonry Contractor shall be responsible for the temporary bracing of masonry walls before permanent lateral support is in place.
8. Masonry may be placed using normal procedures when temperatures are between 40-90 degrees
   - A. When temperatures are above or below this range, hot and cold weather masonry procedures outlined in the Specification for Masonry Structures (TMS 602) shall be followed.
   - B. When temperatures are above 100 degrees or 90 degrees with an 8 mph wind, "Hot weather procedures" must be followed.
   - C. When temperatures are below 40 degrees, "Cold weather procedures" must be followed.
     - a. Building with frozen materials is not allowed. Using calcium chloride is not allowed. All walls shall be covered at the end of each day.
9. Work in progress shall be inspected and materials, equipment and procedures evaluated for quality and acceptability by qualified personnel. Requirements for materials and construction of masonry shall be in accordance with the Specifications for Masonry Structures (TMS 602).

SPECIAL INSPECTIONS:

1. Special inspections shall be performed in accordance with Chapter 17 of the 2018 International Building Code (IBC). All special inspectors shall be qualified for inspection of the particular type of construction requiring special inspection and must be approved by the building official. Special inspectors shall perform the duties and responsibilities outlined in Chapter 17 of the 2018 edition of the IBC. Reports shall be submitted to the building official, architect, and engineer of record in a timely manner.
2. Types of work requiring special inspection:
   - A. Concrete per Section 1705.3:
     - a. Periodic inspection of the placement of reinforcing steel.
     - b. Periodic inspection of all post-installed anchors and continuous inspection of adhesive anchors installed horizontal or overhead in hardened concrete. Inspections shall include hole size and depth, cleaning procedure, materials, and location. All anchors installed in hardened concrete are subject to inspection.
     - c. Periodic verification of concrete mix design.
     - d. Continuous sampling of fresh concrete. Perform tests for slump, air content, and temperature. Cast specimens for strength tests (ref Cast-in-Place Concrete - Execution notes).
     - e. Continuous inspection of concrete placement for proper application techniques.
     - f. Periodic inspection for maintenance of curing and temperature techniques.
     - g. Periodic inspection of formwork for shape, location, and dimensions.
   - B. Masonry per Section 1705.4 and The Masonry Society (TMS) Building Code Requirements and Specification for Masonry Structures 402/602:
     - a. At the beginning of masonry construction, one masonry unit and one grout sample shall be taken for testing. Masonry units shall be tested in accordance with ASTM C140. Grout shall be tested in accordance with ASTM C1019.
     - b. If high lift grouting procedures are used, continuous inspection is required.
     - c. During construction, three masonry units and three grout samples shall be taken.
     - d. The placement of vertical reinforcement and the grouting of walls shall be observed during the initial and final grout pours.
     - e. CMU mortar samples and inspection of joints shall occur at the beginning of masonry construction.
     - f. Anchor bolt placement and grouting below beams or bearing plates at all beam bearing locations shall be inspected prior to the initial and final grout pours.
     - g. Periodic inspection of the preparation, construction, and protection of masonry during cold or hot weather conditions.
   - ***C.*** Structural Steel per Section 1705.2:
     - a. Periodic inspection for material verifications.
       1. High strength bolts, nuts and washer.
       2. Structural steel identification.
       3. Cold formed steel deck identification.
     - b. Periodic inspection of bearing-type bolted connections. Bolts shall be tightened to a snug-tight condition and observed only to ensure that all plies of the connected element have been brought into snug contact.
     - c. Qualifications of welding procedures and welders shall be verified prior to start of work. Periodic inspections shall be made of work in progress and a visual inspection of all welds shall be made prior to completion.
       1. Periodic inspection of single-pass welds.
       2. Periodic inspection of welded steel deck attachments.
       3. Periodic inspection of weld filler materials.
   - D. Shop Fabrication per 1705.10:
     - a. Special inspection is required for shop fabricated members unless the fabricator(s) is registered and approved to perform work without special inspections. Approval shall be based on the fabricator's written procedural and quality control manuals and periodic auditing of fabrication practices by an approved agency.

ABBREVIATIONS

AB	ANCHOR BOLT
ACI	AMERICAN CONCRETE INSTITUTE
AFF	ABOVE FINISHED FLOOR
AISC	AMERICAN INSTITUTE OF STEEL CONSTRUCTION
AISI	AMERICAN IRON AND STEEL INSTITUTE
ARCH	ARCHITECTURAL
ASTM	AMERICAN SOCIETY FOR TESTING AND MATERIALS
AWS	AMERICAN WELDING SOCIETY
BFF	BELOW FINISHED FLOOR
BL	BLOCK LINTEL
BM	BEAM
BO	BOTTOM OF
BOM	BOTTOM OF MASONRY
BOS	BOTTOM OF STEEL
BRG	BEARING
CJ	CONTRACTION JOINT
CL	CENTER LINE
CLR	CLEAR
CMU	CONCRETE MASONRY UNIT
COL	COLUMN
CONC	CONCRETE
COND	CONDENSER UNIT
CONST	CONSTRUCTION
CONT	CONTINUOUS
DIA	DIAMETER
EF	EXHAUST FAN
EIFS	EXTERIOR INSULATION AND FINISH SYSTEM
EJ	EXPANSION JOINT
EL	ELEVATION
ELEC	ELECTRICAL
EQ	EQUAL
ETR	EXISTING TO REMAIN
EW	EACH WAY
FDN	FOUNDATION
FF	FINISHED FLOOR
FS	FAR SIDE
FTG	FOOTING
FV	FIELD VERIFY
GA	GAUGE
GC	GENERAL CONTRACTOR
H	HEIGHT
HORIZ	HORIZONTAL
HSA	HEADED STUD ANCHOR
HSS	HOLLOW STRUCTURAL SHAPE
INFO	INFORMATION
ISO	ISOLATION
JBE	JOIST BEARING ELEVATION
JST	JOIST
JT	JOINT
KSI	KIPS PER SQUARE INCH
L	LENGTH
LB	POUNDS
LLH	LONG LEG HORIZONTAL
LLV	LONG LEG VERTICAL
LONG	LONGITUDINAL
MAX	MAXIMUM
MECH	MECHANICAL
MFR	MANUFACTURER
MIN	MINIMUM
MISC	MISCELLANOUS
MO	MASONRY OPENING
MTL	METAL
NIC	NOT IN CONTRACT
NO	NUMBER
NS	NEAR SIDE
NTS	NOT TO SCALE
OC	ON CENTER
OD	OUTSIDE DIAMETER
OH	OPPOSITE HAND
PAF	POWER ACTUATED FASTENER
PCF	POUNDS PER CUBIC FOOT
PL	PLATE
PLF	POUNDS PER LINEAR FOOT
PLUMB	PLUMBING
PMEJ	PREMOLDED EXPANSION JOINT
PSF	POUNDS PER SQUARE FOOT
PSI	POUNDS PER SQUARE INCH
QTY	QUANITY
RACK	REFRIGERATION RACK
REF	REFER TO
REINF	REINFORCING
REQD	REQUIRED
REV	REVERSE
RO	ROUGH OPENING
RTU	ROOF TOP UNIT
SCHED	SCHEDULE
SDI	STEEL DECK INSTITUTE
SIM	SIMILAR
SJI	STEEL JOIST INSTITUTE
SPCS	SPACES
SPECS	SPECIFICATIONS
STRUC	STRUCTURAL
T&B	TOP AND BOTTOM
THK	THICKNESS
TO	TOP OF
TOC	TOP OF CONCRETE
TOF	TOP OF FOOTING
TOM	TOP OF MASONRY
TOS	TOP OF STEEL
TOW	TOP OF WALL
TRANS	TRANSVERSE
TYP	TYPICAL
UNO	UNLESS NOTED OTHERWISE
VERT	VERTICAL
W	WIDTH
WP	WORK POINT
WWF	WELDED WIRE FABRIC

RELEASE FOR CONSTRUCTION
AS NOTED ON PLANS REVIEW
AND SUPPLEMENTAL SUBMITTAL ITEMS
Joe Frogge 12/29/2020

REVISION	BY

JBA JOHNSTON BURKHOLDER ASSOCIATES
consulting structural engineers
930 CENTRAL · KANSAS CITY, MO 64105
816-421-4200 · WWW.JBAENGR.COM
JBA PROJ #: 20332 - JSH

PROFESSIONAL SEAL

STATE OF MISSOURI · BART HALVERSON · NUMBER E-27039 · PROFESSIONAL ENGINEER

10/22/20

LOCATION
LEE'S SUMMIT, MO

HY-VEE, INC.
5820 WESTOWN PARKWAY
WEST DES MOINES, IOWA 50266
TELEPHONE: (515) 267-2800
FAX: (515) 267-2935

hy-vee® EMPLOYEE OWNED

NORTH

STRUCTURAL NOTES

PROJECT MANAGER	CHECKED BY:
JSH	BJH
DRAWN BY:	DATE:
JBA	10/20/2020
SCALE:	JOB NUMBER:
12" = 1'-0"	62930547

SHEET:

S0.1

10/22/2020 1:40:42 PM

RELEASE FOR CONSTRUCTION
AS NOTED ON PLANS REVIEW
SEALED WITH EXCEPTIONS
LEE'S SUMMIT, MISSOURI
12/29/2020

REVISION	DATE	BY

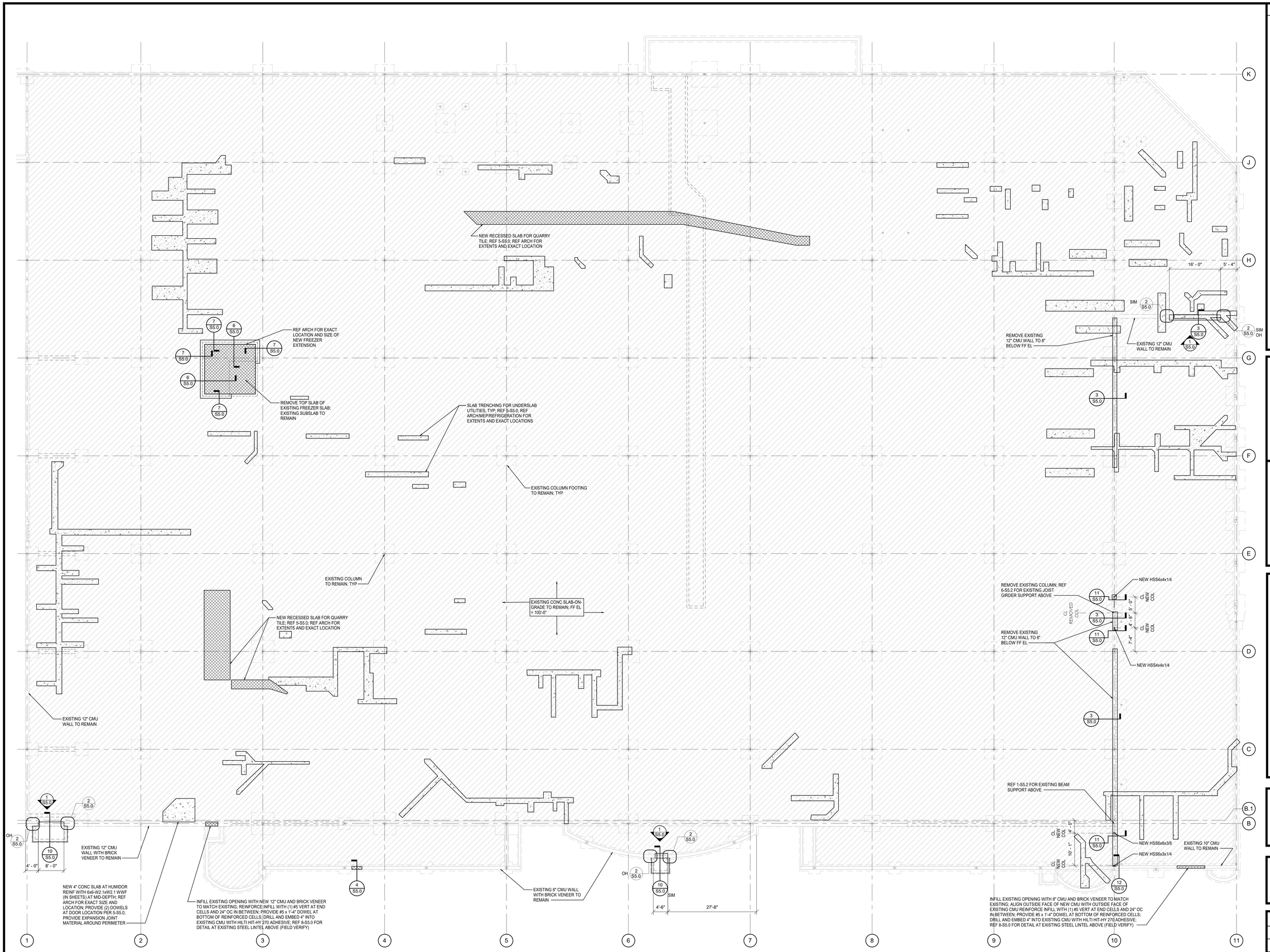

1 FOUNDATION PLAN
SCALE: 3/32" = 1'-0"

JBA JOHNSTON BURKHOLDER ASSOCIATES
consulting structural engineers
930 CENTRAL · KANSAS CITY, MO 64105
816-421-4200 · WWW.JBAENGR.COM
JBA PROJ #: 20332 - JSH

PROFESSIONAL SEAL

STATE OF MISSOURI
BART HALVERSON
NUMBER E-20439
PROFESSIONAL ENGINEER
10/22/20

LOCATION
LEE'S SUMMIT, MO

HY-VEE, INC.
5820 WESTOWN PARKWAY
WEST DES MOINES, IOWA 50266
TELEPHONE: (515) 267-2800
FAX: (515) 267-2803

HyVee EMPLOYEE OWNED

NORTH

FOUNDATION PLAN

PROJECT MANAGER	CHECKED BY:
JSH	BJH
DRAWN BY:	DATE:
JBA	10/20/2020
SCALE:	JOB NUMBER:
3/32" = 1'-0"	62930547

SHEET:
S1.0

10/22/2020 1:40:42 PM

RELEASE FOR CONSTRUCTION
AS NOTED ON PLANS REVIEW
SEALED PER LETTER
DATED 12/29/2020

REVISION | DATE | BY

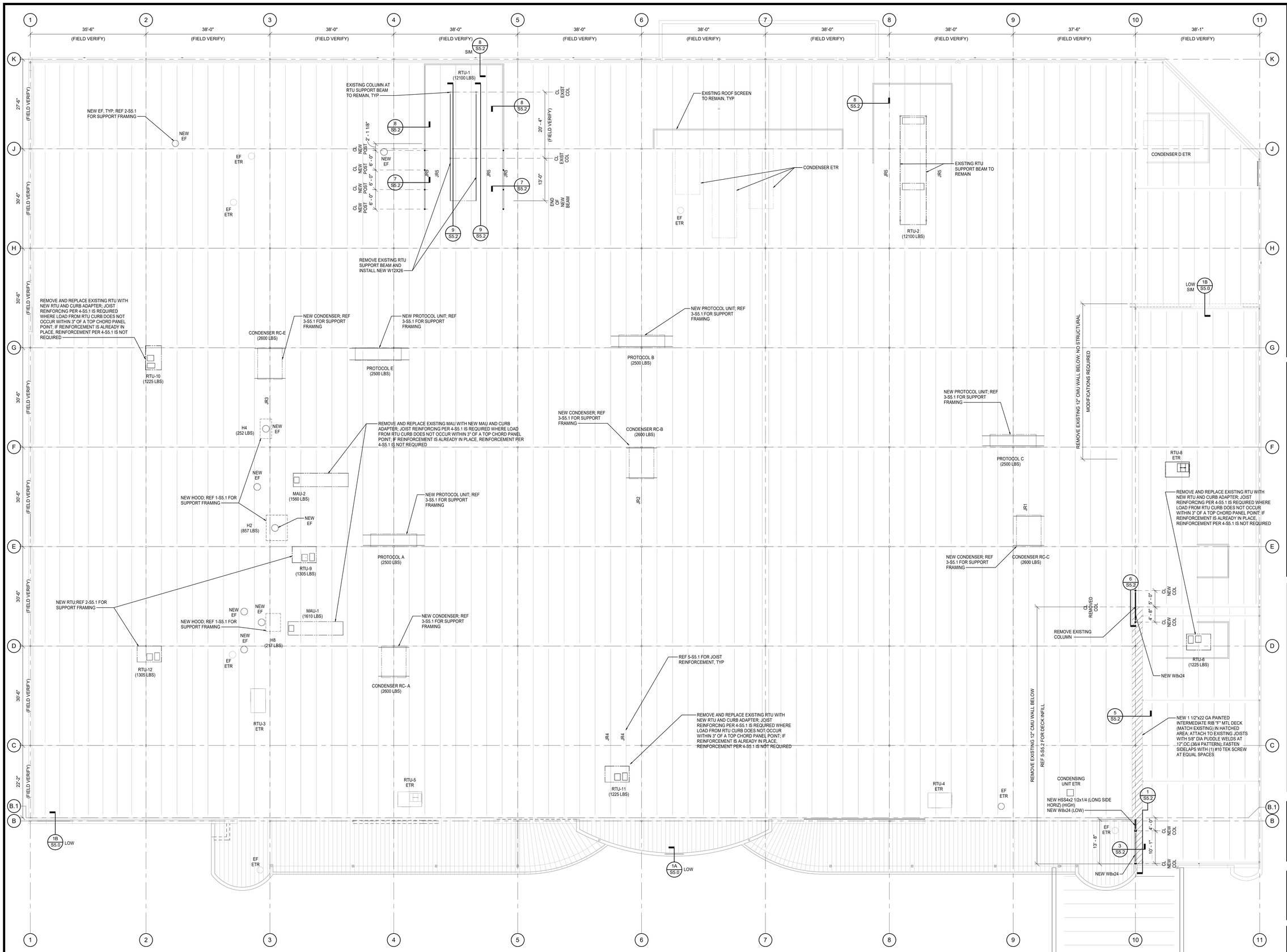

1 ROOF FRAMING PLAN
SCALE: 3/32" = 1'-0"

JOHNSTON BURKHOLDER ASSOCIATES
consulting structural engineers
930 CENTRAL · KANSAS CITY, MO 64105
816-421-4200 · WWW.JBAENGR.COM
JBA PROJ #: 20332 - JSH

PROFESSIONAL SEAL
STATE OF MISSOURI
BART HALVERSON
NUMBER E-29429
10/22/20

LOCATION
LEE'S SUMMIT, MO

HY-VEE, INC.
5820 WESTOWN PARKWAY
WEST DES MOINES, IOWA 50266
TELEPHONE: (515) 267-2800
FAX: (515) 267-2803

hy-vee® EMPLOYEE OWNED

NORTH

ROOF FRAMING PLAN

PROJECT MANAGER	CHECKED BY:
JSH	BJH
DRAWN BY:	DATE:
JBA	10/20/2020
SCALE:	JOB NUMBER:
3/32" = 1'-0"	62930547

SHEET:
S2.0

10/22/2020 1:40:44 PM

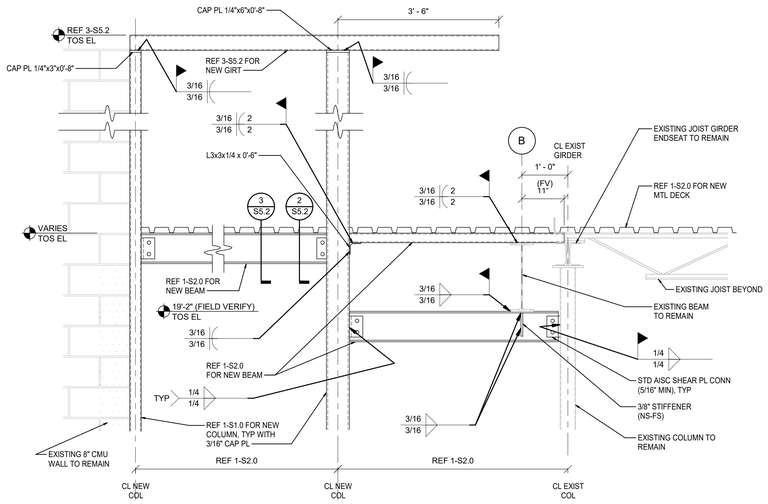

1 NEW SUPPORT FRAMING AT EXIST BEAM/JST GIRDER

SCALE: 3/4" = 1'-0"

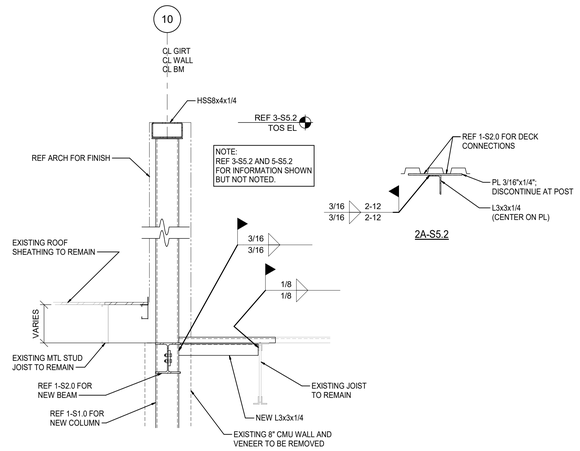

2 NEW COLUMN AT EXISTING ROOF

SCALE: 3/4" = 1'-0"

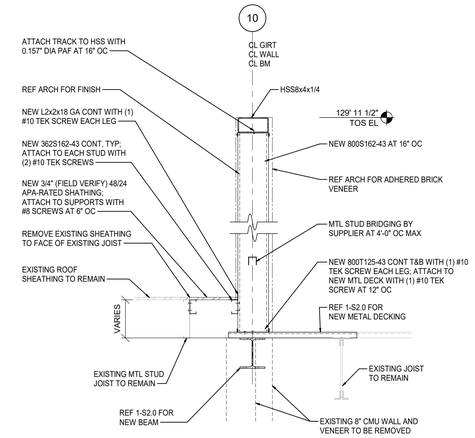

3 NEW PARAPET RETURN WALL

SCALE: 3/4" = 1'-0"

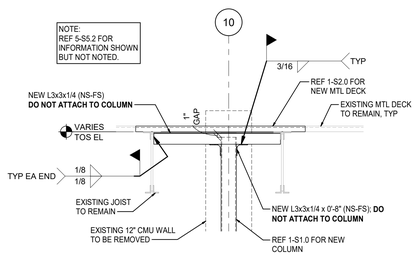

4 NEW COLUMN AT EXISTING ROOF

SCALE: 3/4" = 1'-0"

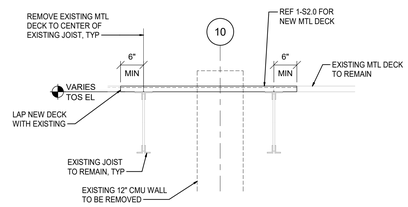

5 NEW DECK BRG AT EXISTING

SCALE: 3/4" = 1'-0"

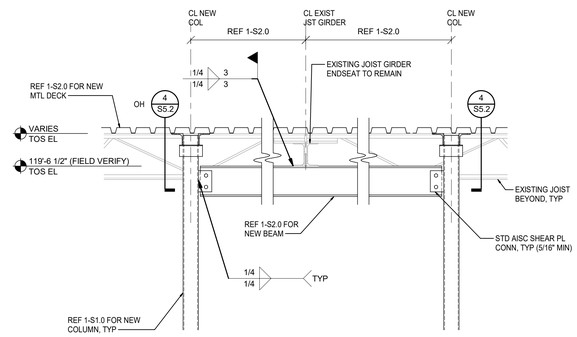

6 NEW SUPPORT FRAMING AT EXISTING JST GIRDER

SCALE: 3/4" = 1'-0"

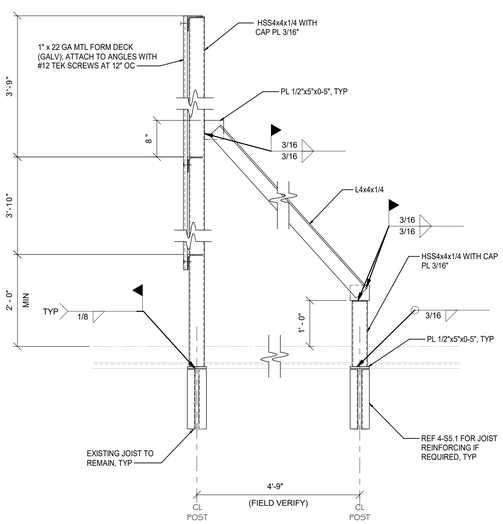

7 SCREEN WALL

SCALE: 3/4" = 1'-0"

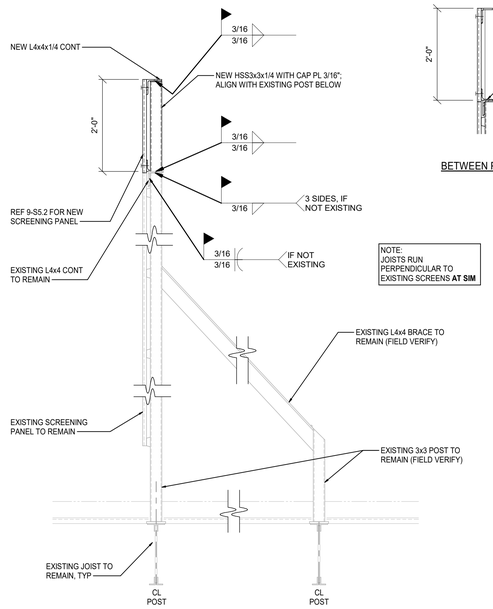

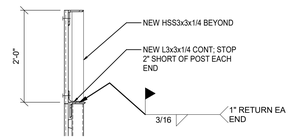

BETWEEN POSTS

8 SCREEN WALL EXTENSION

SCALE: 3/4" = 1'-0"

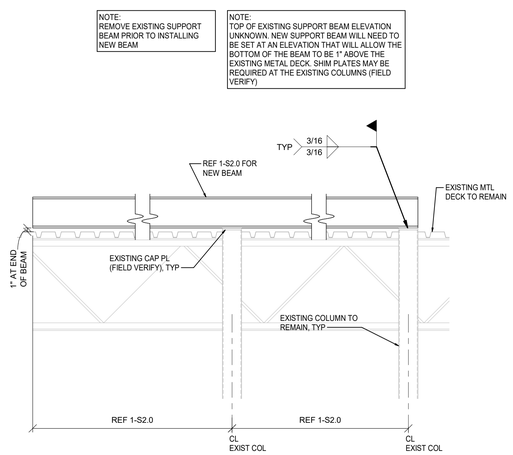

9 RTU-1 SUPPORT BEAM

SCALE: 3/4" = 1'-0"

RELEASE FOR CONSTRUCTION
AS NOTED ON PLANS REVIEW
SEAL OF THIS DOCUMENT
REVISION | DATE | BY

JBA JOHNSTON BURKHOLDER ASSOCIATES
consulting structural engineers
930 CENTRAL · KANSAS CITY, MO 64105
816-421-4200 · WWW.JBAENGR.COM
JBA PROJ #: 20332 - JSH

PROFESSIONAL SEAL

STATE OF MISSOURI · BART HALVERSON · NUMBER E-30438 · REGISTERED PROFESSIONAL ENGINEER
10/22/20

LOCATION
LEE'S SUMMIT, MO

HY-VEE, INC.
5820 WESTOWN PARKWAY
WEST DES MOINES, IOWA 50266
TELEPHONE: (515) 267-2800
FAX: (515) 267-2935
hy-vee® EMPLOYEE OWNED

NORTH

STRUCTURAL SECTIONS & DETAILS

PROJECT MANAGER	CHECKED BY:
JSH	Approver
DRAWN BY:	DATE:
Author	10/20/2020
SCALE:	JOB NUMBER:
3/4" = 1'-0"	62930547

SHEET:
S5.2

10/22/2020 1:40:49 PM

RELEASE FOR CONSTRUCTION
AS NOTED ON PLANS REVIEW
SEALED PER ENGINEER
SUBMIT. REVIEW
12/29/2020

REVISION | DATE | BY

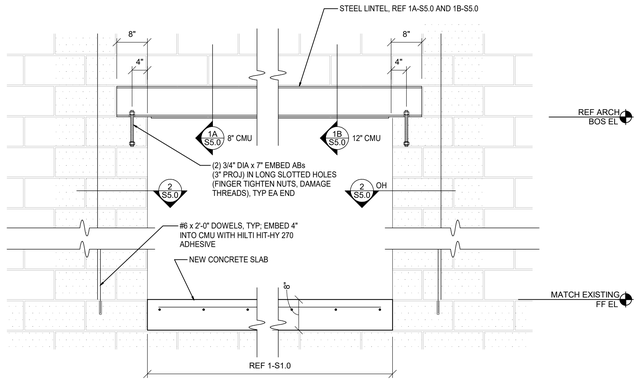

1 STEEL LINTEL AT CMU OPENING IN EXISTING WALL
SCALE: 3/4" = 1'-0"

NOTE:
CONTRACTOR SHALL BE RESPONSIBLE FOR DESIGN AND INSTALLATION OF TEMPORARY SUPPORT OF EXISTING CMU WALL AND VENEER AT NEW OPENING UNTIL NEW STEEL LINTEL WITH BOTTOM PLATE IS IN PLACE AND ALL CONNECTIONS ARE COMPLETE

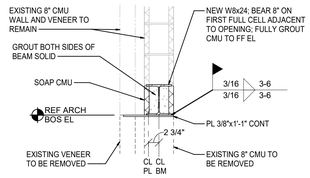

1A-S5.0: EXISTING 8" CMU

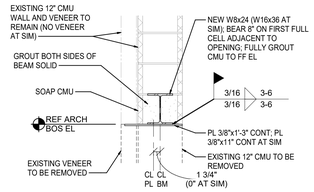

1B-S5.0: EXISTING 12" CMU

NOTE:
IF EXISTING CELL(S) IS REINFORCED AND GROUTED SOLID, REINFORCING SHOWN FOR THAT CELL IS NOT REQUIRED.

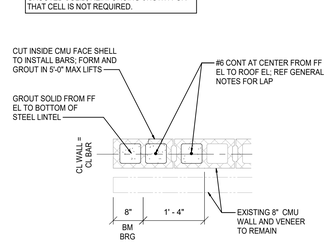

EXISTING 8" CMU

NOTE:
IF EXISTING CELL(S) IS REINFORCED AND GROUTED SOLID, REINFORCING SHOWN FOR THAT CELL IS NOT REQUIRED.

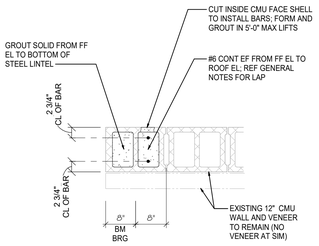

EXISTING 12" CMU

2 JAMB REINFORCING AT NEW OPENING
SCALE: 3/4" = 1'-0"

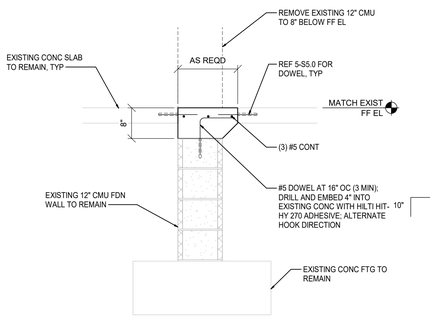

3 SLAB INFILL AT NEW OPENING
SCALE: 3/4" = 1'-0"

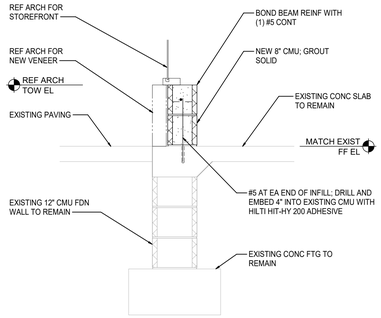

4 CMU INFILL AT NEW STOREFRONT
SCALE: 3/4" = 1'-0"

NOTE:
REF ARCH FOR RECESSED SLAB LOCATIONS

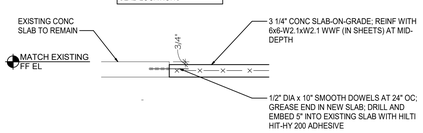

AT RECESSED SLAB FOR QUARRY TILE

NOTE:
REF ARCH FOR SLAB TRENCHING LOCATIONS

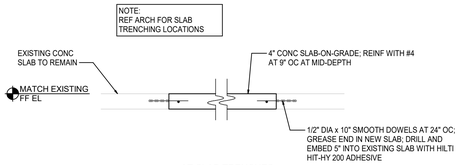

AT SLAB TRENCHES

5 NEW SLAB AT EXISTING SLAB
SCALE: 3/4" = 1'-0"

NOTE:
REF 7-S5.0 FOR INFORMATION SHOWN BUT NOT NOTED.

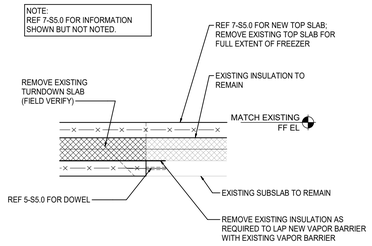

6 NEW FREEZER SLAB AT EXISTING
SCALE: 3/4" = 1'-0"

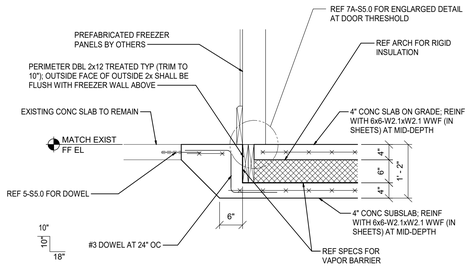

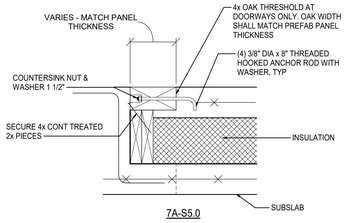

7A-S5.0

7 FREEZER SLAB
SCALE: 3/4" = 1'-0"

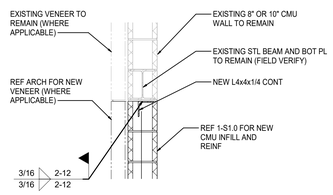

8 NEW INFILL AT EXISTING OPENING
SCALE: 3/4" = 1'-0"

9 NOT USED
SCALE: 3/4" = 1'-0"

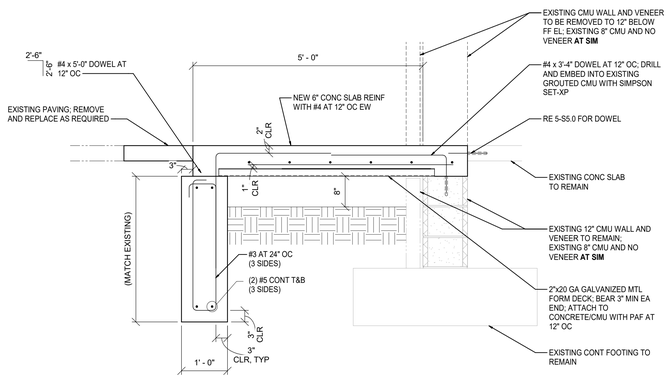

10 FOUNDATION AT STOOP
SCALE: 3/4" = 1'-0"

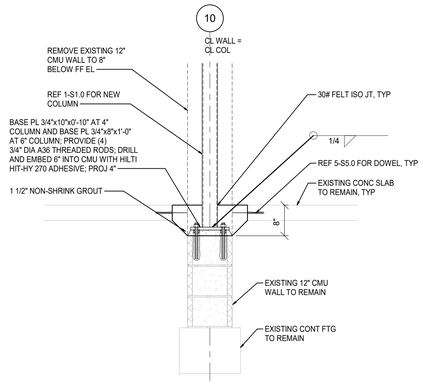

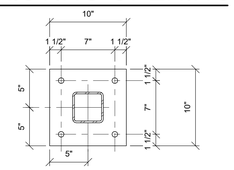

6" COLUMN BASE PLATE

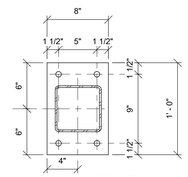

4" COLUMN BASE PLATE

11 COLUMN FOOTING AT EXISTING CMU WALL
SCALE: 3/4" = 1'-0"

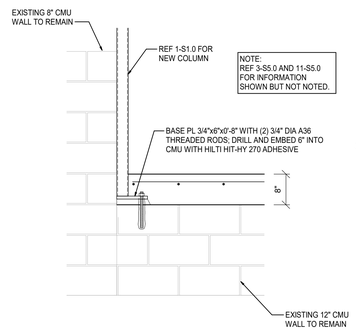

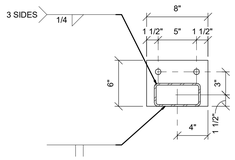

BASE PLATE

12 COLUMN AT EXISTING CMU WALL
SCALE: 3/4" = 1'-0"

10/22/2020 1:40:44 PM

JBA JOHNSTON BURKHOLDER ASSOCIATES
consulting structural engineers
930 CENTRAL · KANSAS CITY, MO 64105
816-421-4200 · WWW.JBAENGR.COM
JBA PROJ #: 20332 - JSH

PROFESSIONAL SEAL

STATE OF MISSOURI · BART HALVERSON · NUMBER E-29430 · PROFESSIONAL ENGINEER
10/22/20

LOCATION
LEE'S SUMMIT, MO

HY-VEE, INC.
5820 WESTOWN PARKWAY
WEST DES MOINES, IOWA 50266
TELEPHONE: (515) 267-2800
FAX: (515) 267-2803

hy-vee® EMPLOYEE OWNED

NORTH

STRUCTURAL SECTIONS & DETAILS

PROJECT MANAGER	CHECKED BY:
JSH	BJH
DRAWN BY: JBA'	DATE: 10/20/2020
SCALE: As indicated	JOB NUMBER: 62930547

SHEET:
S5.0

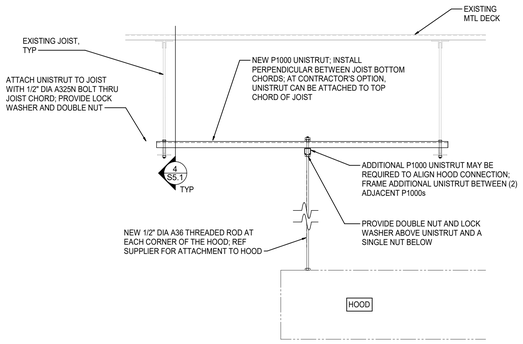

1 SUSPENDED HOOD SUPPORT

SCALE: 3/4" = 1'-0"

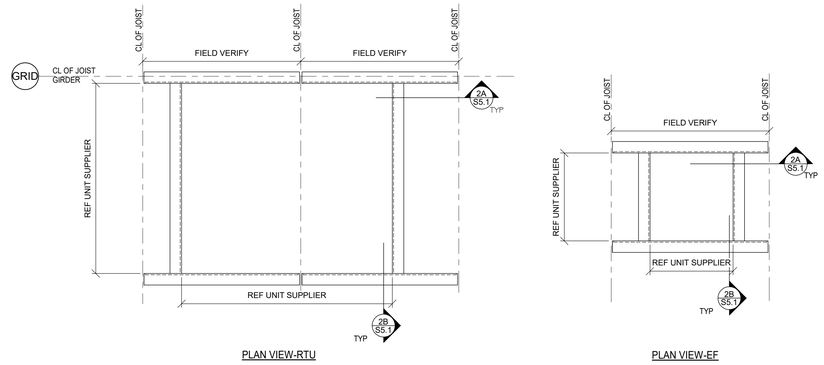

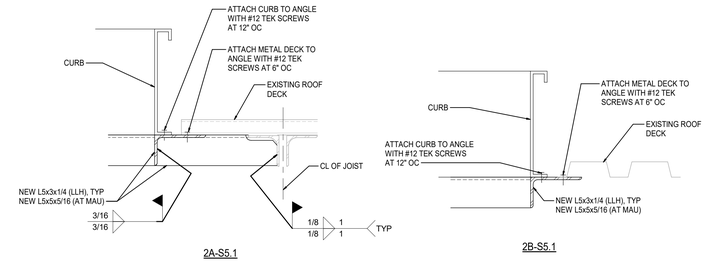

2 RTU/EXHAUST FAN SUPPORT FRAMING

SCALE: NTS

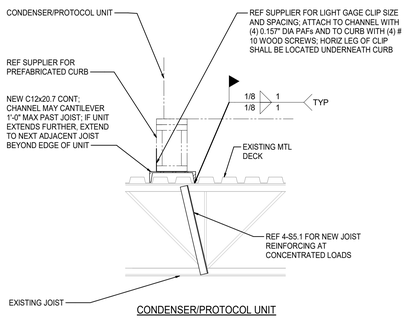

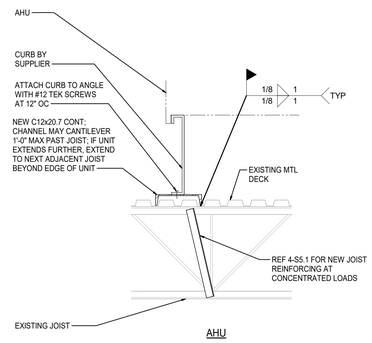

3 CONDENSER/PROTOCOL UNIT/AHU SUPPORT FRAMING

SCALE: 3/4" = 1'-0"

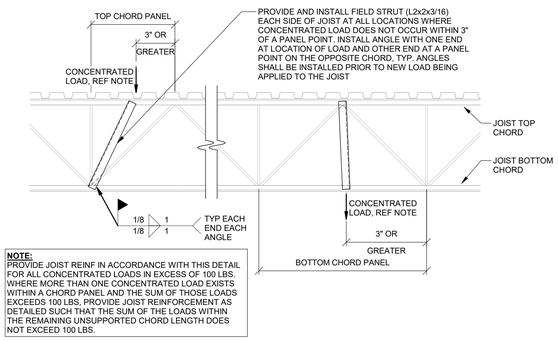

NOTE:
PROVIDE JOIST REINF IN ACCORDANCE WITH THIS DETAIL FOR ALL CONCENTRATED LOADS IN EXCESS OF 100 LBS. WHERE MORE THAN ONE CONCENTRATED LOAD EXISTS WITHIN A CHORD PANEL AND THE SUM OF THOSE LOADS EXCEEDS 100 LBS, PROVIDE JOIST REINFORCEMENT AS DETAILED SUCH THAT THE SUM OF THE LOADS WITHIN THE REMAINING UNSUPPORTED CHORD LENGTH DOES NOT EXCEED 100 LBS.

4 JOIST REINFORCING AT CONCENTRATED LOAD

SCALE: 3/4" = 1'-0"

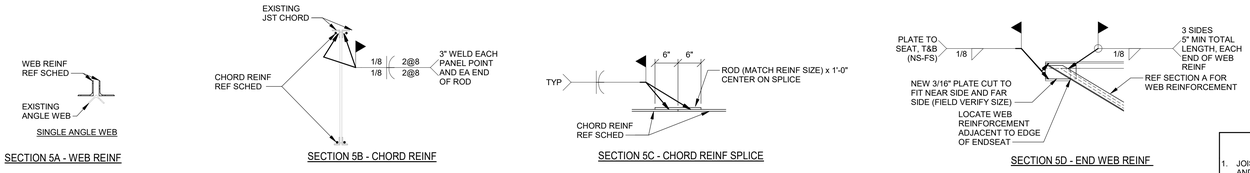

JOIST REINFORCEMENT NOTES

1. JOIST WEB CONFIGURATION IS SHOWN FOR REFERENCE ONLY, FIELD VERIFY ACTUAL CONFIGURATION AND WEB TYPE.
2. ALL PAINT AND DEBRIS SHALL BE CLEANED FROM JOIST BEFORE WELDING REINFORCEMENT.
3. STEEL ERECTOR SHALL FIELD CUT REINFORCING TO FIT FROM STOCK LENGTHS.
4. EXTEND TOP AND BOTTOM CHORD REINFORCING A MINIMUM OF 8" BEYOND PANEL POINTS.
5. INSTALL WEB REINFORCING PRIOR TO CHORD REINFORCING. COPE OUTSTANDING LEG OF WEB REINFORCING AS REQUIRED FOR PLACEMENT OF CHORD REINFORCING.
6. IF EXISTING JOIST BRIDGING INTERFERES WITH INSTALLATION OF REINFORCING, REMOVE BRIDGING AND REPLACE IMMEDIATELY UPON COMPLETION OF REINFORCING INSTALLATION. IF BRIDGING TABS FOR BOLTED BRIDGING INTERFERE WITH INSTALLATION OF REINFORCING, REMOVE TABS AND REPLACE IMMEDIATELY UPON COMPLETION OF REINFORCING INSTALLATION. NEW CONNECTIONS SHALL MATCH EXISTING.
7. JOISTS SHALL BE REINFORCED PRIOR TO INSTALLATION OF MECHANICAL UNITS OR HANGING LOADS. ROOF SNOW LOAD SHALL BE REMOVED PRIOR TO JOIST REINFORCEMENT. REF 4-S5.1 FOR ADDITIONAL REINFORCEMENT REQUIRED AT CONCENTRATED LOADS.

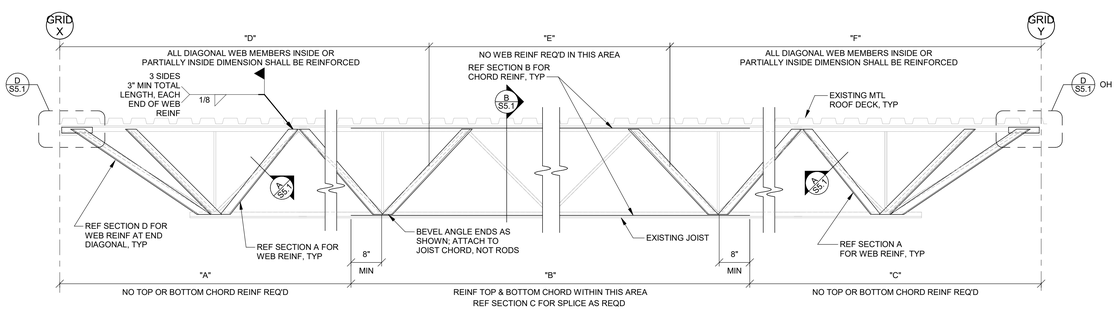

JOIST REINFORCING SCHEDULE

JOIST REINF MARK	CHORD REINF	WEB REINF	"A"	"B"	"C"	"D"	"E"	"F"	GRID X	GRID Y	NOTES
JR1	-	(2) L2x2x3/16	0' - 0"	0' - 0"	0' - 0"	10' - 0"	0' - 0"	0' - 0"	E	F	1,2,3,6,7
JR2	-	(2) L2x2x3/16	0' - 0"	0' - 0"	0' - 0"	10' - 0"	0' - 0"	0' - 0"	F	E	1,2,3,6,7
JR3		(2) L2x2x3/16	0' - 0"	0' - 0"	0' - 0"	10' - 0"	0' - 0"	0' - 0"	G	F	1,2,3,6,7
JR4		(2) L2x2x3/16	0' - 0"	0' - 0"	0' - 0"	13' - 0"	0' - 0"	0' - 0"	B.1	D	1,2,3,6,7
JR5	(2) 1/2" DIA RODS	(2) L2x2x3/16	6' - 0"	32' - 9"	6' - 0"	19' - 0"	5' - 9"	20' - 0"	8	7	1,2,3,4,5,6,7

5 JOIST REINFORCEMENT

SCALE: 3/4" = 1'-0"

RELEASE FOR CONSTRUCTION
AS NOTED ON PLANS REVIEW
NOT FOR PERMIT, BIDDING OR CONSTRUCTION
12/29/2020

REVISION	DATE	BY

JOHNSTON BURKHOLDER ASSOCIATES
consulting structural engineers
930 CENTRAL · KANSAS CITY, MO 64105
816-421-4200 · WWW.JBAENGR.COM
JBA PROJ #: 20332 - JSH

PROFESSIONAL SEAL

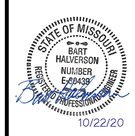

LOCATION
LEE'S SUMMIT, MO

HY-VEE, INC.
5820 WESTOWN PARKWAY
WEST DES MOINES, IOWA 50266
TELEPHONE: (515) 267-2800
FAX: (515) 267-2803
hy-vee®
EMPLOYEE OWNED

NORTH

STRUCTURAL SECTIONS & DETAILS

PROJECT MANAGER	CHECKED BY:
JSH	Approver
DRAWN BY:	DATE:
Author	10/20/2020
SCALE:	JOB NUMBER:
As indicated	62930547

SHEET:
S5.1

10/22/2020 1:40:46 PM