STARBUCKS AND FUTURE MEDICAL OFFICE SHELL

155 S.W. MO-150 HWY
LEE'S SUMMIT, MO 64802

RELEASE FOR CONSTRUCTION
AS NOTED ON PLANS REVIEW
DEVELOPMENT SERVICES
LEE'S SUMMIT, MISSOURI
08/17/2020

Joe Frogge

Digitally signed by Joe Frogge
DN: C=US,O=Frogge, OU=Development, OU=LS Lees, DC=COLS, DC=LOC
Reason: release for construction
Date: 2020.08.17 09:28:34-05'00'

ABBREVIATIONS

AFF	ABOVE FINISHED FLOOR
AC	ACOUSTICAL
A/C	AIR CONDITIONING
ALT	ALTERNATE
AL	ALUMINUM
ALUM	ALUMINUM
AB	ANCHOR BOLT
ARCH	ARCHITECT(URAL)
BSMT	BASEMENT
BRG	BEARING
BM	BENCH MARK
BEL	BELOW
BLK	BLOCK
BLKG	BLOCKING
BD	BOARD
BW	BOTH WAYS
BOT	BOTTOM
BF	BOTTOM OF FOOTING
BOF	BOTTOM OF FOOTING
BRK	BRICK
BLDG	BUILDING
BUR	BUILT-UP ROOFING
CAB	CABINET
CLG	CEILING
CL	CENTER LINE
C/O	CENTER OF
CC	CENTER TO CENTER
CLR	CLEAR
COL	COLUMN
CONC	CONCRETE
CMU	CONCRETE MASONRY UNIT
CONST	CONSTRUCTION
CONTR	CONTRACTOR
CONT	CONTINUOUS
CNTR	COUNTER
CFL	COUNTER FLASHING
CISK	COUNTERSUNK
CRS	COURSE(S)
CF	CUBIC FOOT
CY	CUBIC YARD
DL	DEAD LOAD
DEM	DEMOLISH, DEMOLITION
DTL	DETAIL
DIAG	DIAGONAL
DIAM	DIAMETER
DIM	DIMENSION
DR	DOOR
DS	DOWN SPOUT
D	DRAIN
DWG	DRAWING
DF	DRINKING FOUNTAIN
E	EAST
EIFS	EXTERIOR INSULATION AND FINISH SYSTEM
ELEC	ELECTRIC(AL)
EWC	ELECTRIC WATER COOLER
ELEV	ELEVATION
ELEV	ELEVATOR
EMER	EMERGENCY
EQ	EQUAL
EXIST	EXISTING
EXP	EXPOSED
EXT	EXTERIOR
FOF	FACE OF FINISH
FQ	FACE OF
FOM	FACE OF MASONRY
FOS	FACE OF STUDS
FIN	FINISH(ED)
FFE	FINISHED FLOOR ELEV.
FFL	FINISHED FLOOR LINE
FE	FIRE EXTINGUISHER
FEC	FIRE EXTINGUISHER CABINET
FT	FIRE TREATED
FLG	FLASHING
FLR	FLOOR
FD	FLOOR DRAIN
FTG	FOOTING
FDN	FOUNDATION
FNDN	FOUNDATION
FUR	FURRED(ING)
GA	GAGE, GAUGE
GALV	GALVANIZED
GC	GENERAL CONTRACT(OR)
GL	GLASS, GLAZING
GP	GYPSUM, GYP, GYPSUM
GWB	GYPSUM WALL BOARD
HTG	HEATING
HVAC	HEATING/VENTILATING/AIR COND.
HT	HEIGHT
HC	HOLLOW CORE
HM	HOLLOW METAL
HOR	HORIZONTAL
HB	HOSE BIBB
INS	INSULATE(D)(ION)
INSUL	INSULATE
INT	INTERIOR
JST	JOIST
JT	JOINT
JNT	JOINT
LH	LEFT HAND
LF	LINEAL FOOT
LTL	LENGTH
L	LINTEL
LL	LIVE LOAD
MFR	MANUFACTURER
MAS	MASONRY
MO	MASONRY OPENING
MAX	MAXIMUM
MECH	MECHANIC(AL)
MED	MEDIUM
MBR	MODIFIED BITUMEN ROOFING
MET	METAL
MTL	METAL
M	METER(S)
MWK	MILLWORK
MIN	MINIMUM
MISC	MISCELLANEOUS
MT	MOUNT(ED)(ING)
NOM	NOMINAL
N	NORTH
NIC	NOT IN CONTRACT
NTS	NOT TO SCALE
OC	ON CENTER(S)
OPG	OPENING
OPH	OPPOSITE HAND
OD	OUTSIDE DIAMETER
OO	OUT TO OUT
OA	OVERALL
OH	OVERHEAD
PNT	PAINT(ED)
PTD	PAINT(ED)
PKG	PARKING
PLAM	PLASTIC LAMINATE
PL	PLATE
PWD	PLYWOOD
PVC	POLYVINYL CHLORIDE
PSF	POUNDS PER SQUARE FT.
PSI	POUNDS PER SQUARE IN.
PT	PRESSURE TREATED
PL	PROPERTY LINE
REM	REMOVE
RET	RETURN
RH	RIGHT HAND
RD	ROOF DRAIN
RFG	ROOFING
RM	ROOM
RO	ROUGH OPENING
SNT	SEALANT
SLNT	SEALANT
SEC	SECTION
SECT	SECTION
SHTHG	SHEATHING
SHT	SHEET
SIM	SIMILAR
SC	SOLID CORE
S	SOUTH
SF	SQUARE FOOT
SI	SQUARE INCH
SY	SQUARE YARD
STD	STANDARD
STO	STORAGE
SUS	SUSPENDED
SYM	SYMMETRY(ICAL)
TEL	TELEPHONE
TV	TELEVISION
THK	THICK(NESS)
T&G	TONGUE & GROOVE
TM	TOP OF MASONRY
TOM	TOP OF MASONRY
TS	TOP OF STEEL
TOS	TOP OF STEEL
TW	TOP OF WALL
TOW	TOP OF WALL
TYP	TYPICAL
UON	UNLESS OTHERWISE NOTED
UNO	UNLESS NOTED OTHERWISE
VERT	VERTICAL
VT	VINYL TILE
WSCT	WAINSCOT
WC	WATER CLOSET
WWF	WELDED WIRE FABRIC
W	WEST
W	WIDTH, WIDE
WIN	WINDOW
WO	WITHOUT
W/O	WITHOUT
WD	WOOD

VICINITY MAP

CODE DATA SUMMARY

GOVERNING BUILDING CODES:

BUILDING:	2018 INTERNATIONAL BUILDING CODE
MECHANICAL:	2018 INTERNATIONAL MECHANICAL CODE
ELECTRICAL:	2017 NATIONAL ELECTRIC CODE
PLUMBING:	2018 INTERNATIONAL PLUMBING CODE
GAS:	2018 INTERNATIONAL FUEL AND GAS CODE
ACCESSIBILITY:	ICC/ANSI A117.1-2017
FIRE:	2018 INTERNATIONAL FIRE CODE

BUILDING DATA:

CONSTRUCTION TYPE:	V-B UNPROTECTED
SPRINKLERED:	NO
USE GROUP:	B - BUSINESS
TOTAL SQUARE FEET:	4,785
LL UTILITY ROOM:	82
INTERSTITIAL SPACE:	273
STARBUCKS SHELL:	2,114
OCCUPANT LOAD*:	69 INTERIOR OCC. AND 28 EXTERIOR OCC. = 97 OCC. x 0.2" = 18" REQUIRED EGRESS WIDTH
TENANT SHELL:	2,316
OCCUPANT LOAD:	24 INTERIOR OCC. x 0.2" = 5" REQUIRED EGRESS WIDTH

*OCCUPANT LOAD BASED ON PRELIMINARY INTERIOR IMPROVEMENT PLAN PROVIDED BY TENANT

PROJECT SCOPE

MODIFICATION OF AN EXISTING BUSINESS OCCUPANCY TO PROVIDE A COLD/DARK SHELL TO BE DEMISED INTO A SHELL FOR STARBUCKS COFFEE AND AN ADJACENT MEDICAL OFFICE SPACE.

WORK SHALL INCLUDE EXTERIOR MODIFICATIONS, INCLUDING NEW FINISHES , ALUMINUM STOREFRONT AND NEW H.M. MAN DOORS, A PATIO AREA, EXTERIOR ELECTRICAL EQUIPMENT, FOUNDATIONS AND ELECTRICAL ROUGH-INS FOR EXTERIOR DRIVE-THRU EQUIPMENT, MINIMAL EXTERIOR LIGHTING, ROUGH-INS FOR ADDITIONAL EXTERIOR POWER, LIGHTING AND SIGNAGE (FOR FUTURE STARBUCKS), AND INTERIOR PLUMBING ROUGH-INS.

DRAWING INDEX

GENERAL NOTES

1. THE INFORMATION PROVIDED IN THIS DOCUMENT IS FROM DOCUMENTATION AVAILABLE AND MAY NOT REFLECT EXACT FIELD CONDITIONS. IT SHALL BE THE RESPONSIBILITY OF THE CONTRACTOR TO FIELD VERIFY ALL INFORMATION.
2. ALL CONSTRUCTION SHALL CONFORM TO ALL CURRENT GOVERNING CODES, ALL APPLICABLE ORDINANCES, REGULATIONS, LANDLORD REQUIREMENTS AND THE DRAWINGS.
3. ALL REQUIREMENTS AND REGULATIONS PERTAINING TO THE DISABLED AND OSHA MUST BE INCORPORATED INTO THE WORK WHETHER OR NOT THEY ARE SPECIFICALLY NOTED IN THE DRAWINGS.
4. DETAILS ARE NOT INTENDED TO SHOW METHOD AND MANNER OF ACCOMPLISHING WORK. MINOR MODIFICATIONS MAY BE REQUIRED TO SUIT THE JOB DIMENSIONS OR CONDITIONS AND SHALL BE INCLUDED AS PART OF THE WORK.
5. THE CONTRACTOR SHALL PROVIDE ALL NECESSARY TEMPORARY BARRIERS, LIGHTING, COVERING, FIRE PREVENTION, NECESSARY FOR THE SAFETY OF ALL PERSONNEL AND THE PROPERTY THROUGHOUT THE ENTIRE PERIOD OF CONSTRUCTION.
6. ALL MATERIALS AND WORK PERFORMED MUST BE IN STRICT ACCORDANCE WITH ALL APPLICABLE RULES, REGULATIONS, STANDARDS, CODES, ORDINANCES, AND LAWS OF ALL LOCAL, CITY, COUNTY, STATE, AND FEDERAL ORGANIZATIONS HAVING JURISDICTION.
7. CONTACT CITY BUILDING DEPARTMENT FOR ALL INSPECTIONS.
8. THE CONTRACTOR SHALL BE RESPONSIBLE FOR VERIFYING THE EXACT LOCATION OF ALL UTILITY LINES AND INTERCEPT AS REQUIRED.
9. FLAMESPREAD FOR THE FINISH MATERIAL FOR INTERIOR WALLS AND CEILINGS SHALL COMPLY WITH THE LOCAL BUILDING CODE.
10. COMBUSTIBLE INTERIOR FINISH PRODUCTS SHALL BE PROVIDED PER THE REQUIREMENTS OF THE RESPECTIVE OCCUPANCY CHAPTER OF THE LOCAL BUILDING CODE, THAT THE PROJECT IS BEING PERMITTED UNDER.
11. SUBCONTRACTORS SHALL BE RESPONSIBLE FOR THE CLEAN-UP OF THE BUILDING FOR THEIR RESPECTIVE TRADE AT THE COMPLETION OF WORK EACH DAY. AT ALL TIMES REMOVE WASTE MATERIAL, TRASH AND DEBRIS AND LEGALLY DISPOSE OF.
12. GENERAL CONTRACTOR SHALL VISIT THE SITE, REVIEW THE BUILDING SHELL DRAWINGS AS SUBMITTED BY THE LANDLORD OR STARBUCKS SITE SURVEYOR, AND BECOME THOROUGHLY FAMILIAR WITH THE SITE CONDITIONS PRIOR TO BIDDING OR CONSTRUCTION.
13. GENERAL CONTRACTOR SHALL CONSULT WITH OWNER'S CONSTRUCTION MANAGER TO RESOLVE ANY CHANGES, OMISSIONS, OR PLAN DISCREPANCIES PRIOR TO BIDDING OR CONSTRUCTION.
14. ALL WORK SHALL BE PERFORMED IN STRICT COMPLIANCE WITH LOCAL, COUNTY, STATE, AND FEDERAL CODES AND ORDINANCES.
15. GENERAL CONTRACTOR SHALL VERIFY THE LOCATION OF ALL UTILITIES.
16. GENERAL CONTRACTOR TO VERIFY ALL DIMENSIONS, INCLUDING CLEARANCES REQUIRED BY OTHER TRADES, AND NOTIFY OWNER'S CONSTRUCTION MANAGER OF ANY DISCREPANCIES PRIOR TO PROCEEDING WITH THE WORK. ALL DIMENSIONS ARE TO THE FACE OF THE FINISHED SURFACE UNLESS NOTED OTHERWISE. ALL DIMENSIONS TO BE TAKEN FROM DESIGNATED DATUM POINT. DO NOT SCALE DRAWINGS.
17. GENERAL CONTRACTOR SHALL PATCH AND REPAIR ALL EXISTING WALLS, FLOORS, CEILINGS, OR OTHER SURFACES IDENTIFIED TO REMAIN THAT MAY BECOME DAMAGED DURING THE COURSE OF THE WORK.
18. THE GENERAL CONTRACTOR IS RESPONSIBLE FOR OBTAINING PERMITS FOR FIRE PROTECTION, PLUMBING, MECHANICAL, AND ELECTRICAL SYSTEMS PRIOR TO INSTALLATION OF SUCH SYSTEMS.
19. GENERAL CONTRACTOR SHALL RETAIN ONE SET OF THE PLANS TO NOTE AND DOCUMENT ALL CHANGES DURING CONSTRUCTION. THIS SET SHALL BE A PART OF THE GENERAL CONTRACTOR'S "STORE CLOSE-OUT PACKAGE" AS DESCRIBED IN THE CONSTRUCTION MANAGEMENT AGREEMENT.
20. FOR THE PURPOSE OF THE DOCUMENTS, TO "INSTALL", SHALL MEAN TO PROVIDE ALL FASTENERS, MISCELLANEOUS HARDWARE, BLOCKING, ELECTRICAL CONNECTIONS, PLUMBING CONNECTIONS, AND OTHER ITEMS REQUIRED FOR A COMPLETE AND OPERATION INSTALLATION, UNLESS OTHERWISE NOTED.
21. ALL ITEM SUBSTITUTIONS MUST BE APPROVED BY THE OWNER'S CONSTRUCTION MANAGER.
22. REFER TO ITEM CUT SHEETS FOR ADDITIONAL INFORMATION.
23. SUBCONTRACTORS, SUPPLIERS, AND VENDORS MUST INCLUDE ALL APPROPRIATE SALES TAXES WITHIN THEIR BID PRICING, NO EXCEPTIONS.

MOLD AND MILDEW NOTES

THE FOLLOWING REQUIREMENTS SHALL APPLY TO ALL NEW AND REMODEL CONSTRUCTION PROJECTS.

1. IN THE EVENT THE CONTRACTOR DISCOVERS, AT ANY TIME DURING DEMOLITION, CONSTRUCTION, AND/OR REMODELING OPERATIONS, EXISTING CONDITIONS THAT COULD INCLUDE THE PRESENCE OF MOLD AND/OR MILDEW, THE CONTRACTOR SHALL IMMEDIATELY NOTIFY THE OWNER'S REPRESENTATIVE AND THE ARCHITECT/ENGINEER OF RECORD, IN WRITING, OF THE CONCERNS AND/OR SUSPICIONS.
2. CONCURRENTLY, THE CONTRACTOR SHALL BE RESPONSIBLE TO RETAIN A MOLD AND MILDEW CERTIFIED TESTING AGENCY TO PERFORM AN INVESTIGATION AND TESTING AS REQUIRED TO EVALUATE THE NATURE AND EXTENT OF THE PROBLEM. IF THE TESTING AGENCY CONFIRMS HAZARDS, THE CONTRACTOR SHALL BE RESPONSIBLE TO OBTAIN A MINIMUM OF TWO (2) BIDS FROM COMPANIES QUALIFIED AND LICENSED TO PERFORM ALL NECESSARY REMEDIATION WORK, COMPLYING WITH ALL LOCAL, STATE, AND FEDERAL ENVIRONMENTAL REGULATIONS, CODES, AND STATUTES.
3. ONCE DISCOVERY OR SUSPICION OF MOLD AND/OR MILDEW IS MADE, THE CONTRACTOR SHALL TAKE ALL REASONABLE AND PRACTICAL PRECAUTIONS TO PROTECT ALL CONSTRUCTION PERSONNEL AND THE PUBLIC FROM EXPOSURE TO MOLD AND/OR MILDEW, AND SUCH PRECAUTIONS SHALL REMAIN IN PLACE UNTIL SUCH TIME AS THE OWNER OR HEALTH AUTHORITY DIRECTS OTHERWISE. CONSTRUCTION OPERATIONS SHALL NOT BE STOPPED OR CURTAILED, EXCEPT IN THE AREA OF MOLD/MILDEW CONCERN, DUE TO THESE REQUIRED PRECAUTIONS.
4. THE CONTRACTOR SHALL MAKE ALL REASONABLE EFFORTS TO AVOID CONDITIONS FAVORABLE TO THE DEVELOPMENT OF MOLD AND MILDEW, ESPECIALLY IN VOIDS WHICH WILL BE CONCEALED AND NOT VENTILATED. IN ALL CASES, INTERIOR SPACES AND INTERIOR FINISHED CONSTRUCTION SHALL BE MAINTAINED IN DRY AND WELL-VENTILATED CONDITIONS.
5. THE CONTRACTOR SHALL COMPLY WITH FEDERAL ENVIRONMENTAL AND OHSA REGULATIONS AND ALL LOCAL AND STATE HEALTH DEPARTMENT REQUIREMENTS AND RECOMMENDATIONS REGARDING MOLD AND MILDEW. ALL PENETRATIONS SHALL BE SEALED WATER-TIGHT TO PREVENT MOISTURE MIGRATION FROM ENTERING THE BUILDING OR WALL CAVITIES.
6. ALL CONDENSATE DRAIN PANS SHALL BE CLEANED AND KEPT FREE FROM DEBRIS UNTIL AND WHEN THE FACILITY IS TURNED OVER TO THE OWNER OR TENANT. INSURE POSITIVE DRAINAGE AT ALL DRAIN PANS. INSURE THAT ALL "COLD" SURFACES ARE INSULATED AND COVERED WITH A FULLY SEALED AND CONTINUOUS VAPOR BARRIER. ("COLD" SURFACES INCLUDE, BUT ARE NOT LIMITED TO, DOMESTIC COLD WATER PIPING, CHILLED WATER PIPING, INTERIOR RAIN LEADERS, OUTDOOR AIR INTAKES, AND DUCTWORK CARRYING AIR CONDITIONED SUPPLY AIR.)
7. INSURE THAT THERE ARE NO WATER LEAKS IN CONCEALED PLUMBING CHASES. RETURN AIR PATHS AND PLENUMS SHALL BE KEPT DRY. ALL EXISTING SUPPLY AIR PATHS AND ALL EXISTING DUCTWORK TO BE RE-USED SHALL BE CLEANED AND TREATED AS REQUIRED TO REMOVE THE POTENTIAL FOR MOLD AND MILDEW. ALL DAMP AREAS SHALL BE DRIED THOROUGHLY PRIOR TO ENCLOSURE.

E.I.F.S. NOTES

E.I.F.S. NOTES: THE DETAILS SHOWN HEREON REPRESENT THE MINIMUM INSTALLATION REQUIREMENTS FOR THE DRAINABLE EXTERIOR INSULATED FINISH SYSTEM (E.I.F.S.). THE CONTRACTOR SHALL USE MANUFACTURER'S CERTIFIED INSTALLERS AND SHALL INSTALL THIS SYSTEM IN STRICT ACCORDANCE WITH THE SPECIFIC MANUFACTURER'S REQUIREMENTS, RECOMMENDED DETAILS AND PROCESSES, COMPLETE WITH ALL MEMBRANES, DETAILS AND ACCESSORIES NECESSARY TO PROVIDE A WARRANTED WATER TIGHT ENCLOSURE TO THE BUILDING IN THE AREAS APPLIED. IN THE CASE OF A CONFLICT BETWEEN ANY OF THE DETAILS SHOWN ON THESE DRAWINGS AND THE MANUFACTURER'S DETAILS OR REQUIREMENTS, THE MANUFACTURER'S DETAILS AND REQUIREMENTS SHALL GOVERN AND THE ARCHITECT SHALL BE NOTIFIED IN WRITING OF SUCH CONFLICT.

THIS SYSTEM SHALL BE INSTALLED IN STRICT ACCORDANCE WITH ALL APPLICABLE ASTM STANDARDS AND BUILDING CODE REQUIREMENTS EFFECTING THE SYSTEM.

DEFERRED SUBMITTAL NOTES

1. EXTERIOR SIGNAGE (NOT SHOWN ON DRAWINGS) IS BY OTHERS AND WILL BE APPLIED FOR UNDER A SEPARATE PERMIT.

PROJECT DIRECTORY

BUILDING DEPARTMENT

CITY OF LEE'S SUMMIT
DEVELOPMENT SERVICES
MIKE WEISENBORN - PROJECT MANAGER
220 SE GREEN STREET
LEE'S SUMMIT, MO 64063
(816) 969-1240
Mike.weisenborn@cityofLS.net

GENERAL CONTRACTOR

MIDLAND GENERAL CONTRACTORS, INC.
716 WINDSOR ROAD
LOVES PARK, IL 61111
CONTACT: BRENT JOHNSON
TEL: (815) 988-9600
EMAIL: brent@midlandgeneralcontractors.com

ARCHITECT, STRUCTURAL & M.E.P. ENGINEERS:

CASCO
12 SUNNEN DR., SUITE 100,
ST. LOUIS, MO 63143
CONTACT: STEVE DAHMS
TEL: 314-821-1100
EMAIL: steve_dahms@cascocorp.com

CASCO
12 Sunnen Drive, Suite 100, St. Louis, MO 63143 T: 314.821.1100

MIDLAND GENERAL CONTRACTORS, INCORPORATED

Starbucks & Medical Office
155 S.W. MO-150 HWY
LEE'S SUMMIT, MO 64802

CONSTR. DOC. & REVISIONS

No.	Description	Date
	Owner Review	05/12/20

CASCO DIVERSIFIED CORPORATION
ARCHITECTURAL
CERTIFICATE OF AUTHORITY
#000329 12/31/21

STATE OF MISSOURI
KEYMA L. BULLOCK
NUMBER A-2004011669
ARCHITECT

PROFESSIONAL OF RECORD
BULLOCK, KEYMA L.
License NO. 2004011669
Expiration Date 12/31/20

Drawn By/Checked By:	MS/MSD
Project Number	320488
Permit Date	06-17-20

TITLE SHEET

T1.0

General Conditions

SECTION I - SUPPLEMENTARY CONDITIONS

A. Conditions and requirements: General Conditions, Supplementary Conditions and Division 01 - General Requirements contain information necessary for completion of every part of project.
B. Division 01: Where provisions of general conditions relate to project administration or work-related requirements of the contract, those paragraphs are expanded in division 01.
C. Subcontractors: Contractor agrees to bind subcontractors and material suppliers to terms of general and supplementary conditions, including arbitration.
D. Insurance: as required by and approved by owner.
E. Miscellaneous definitions:
   1. Approved: requires written action by architect as do terms such as "directed," "selected," "required," "ordered," "designated," "accepted," "acceptable," and "satisfactory."
   2. Furnish: supply and deliver to project, unless otherwise specified.
   3. Install: make operational at project for intended use, including unloading, inspecting and completing in place.
   4. Provide: furnish and install, complete and ready for intended use, unless otherwise specified.

DIVISION 1: GENERAL REQUIREMENTS

SECTION 01100 - SUMMARY OF WORK

A. Scope: project consists of construction of the Starbuck's building shell as indicated in contract documents.
   1. Items noted "NIC" (Not In Contract) will be furnished and installed by owner or under separate contract.
   2. Hazardous materials: hazardous material containment, removal and disposal are not included in contract; owner will provide for handling of hazardous materials under separate contract prior to this project. notify owner immediately if hazardous materials are suspected.
B. Work sequence: coordinate construction schedule, operations and use of premises with building management.
C. Contractor use of premises: Limited to areas indicated and as specified; limit access to the project site as directed by owner.
D. Lines and levels engineering: Establish lines and levels by use of recognized engineering practices. Locate and protect control and reference points.
E. Regulatory requirements: Comply with all applicable code requirements. Inform architect immediately of any non-code-complying conditions observed or noted.
F. Standards: Comply with referenced standards except where more rigid requirements are required by code. Unless a specific date is referenced, the issue date of the standard is that date in effect when the documents are issued.

SECTION 01300 - ADMINISTRATIVE REQUIREMENTS

A. Procedures:Contractor shall review and approve submittals prior to submitting to owner's project manager. Contractor shall inform owner's project manager in writing, at time of submission, of any proposed deviation from contract documents.
   1. Contractor's submittal represents that field measurements, field construction criteria, materials, catalog numbers and similar data have been determined and verified by contractor.
B. Shop drawings: Submit shop drawings for custom products and products not fully identified by product data.
C. Product data: Submit number required by contractor plus two for owner's project manager. indicate item to be used where data for more than one product or option is included. Submit product data for each stock manufactured item.
D. Manufacturer's certificates: Submit two copies.
E. Coordination: Coordinate use of premises and access to site under direction of owner. Coordinate work to assure efficient and orderly sequence of installation of construction elements.
   1. Make provisions for owner-installed items and for work under separate contracts.
   2. Verify characteristics of interrelated operating equipment are compatible. Coordinate work having interdependent responsibilities for installing, connection to, and placing such equipment in service.
   3. Coordinate space requirements and installation of mechanical and electrical work. Conceal pipes, ducts, and wiring installed in finished areas. Coordinate locations of fixtures and outlets with finishes.

SECTION 01400 - QUALITY REQUIREMENTS

A. General quality control: Maintain quality control over suppliers, manufacturers, products, services, site conditions, and workmanship, to produce work of specified quality.
B. Manufacturer's field services: When specified in other specification sections, manufacturer or supplier shall have qualified personnel to provide on-site observations and recommendations.
   1. Representative shall:
C. Observe field conditions, including conditions of surfaces. Observe quality of workmanship and methods of installation.
D. Provide recommendations for installation and workmanship.
E. Start, test, and adjust equipment as required.
F. Submit written report of observations to owner's project manager.
G. Mock-ups: Construct field samples and mock-ups on site as required.
H. Testing laboratory services: Testing shall be by an approved testing laboratory, as required by specifications and applicable codes.
   1. Required testing and retesting will be paid for by contractor.
   2. Furnish materials and samples for tests and assist testing laboratory as required.

SECTION 01420 - REFERENCES
PART 1 - GENERAL
1.1 INDUSTRY STANDARDS
   A. Applicability of Standards: Unless the Contract Documents include more stringent requirements, applicable construction industry standards have the same force and effect as if bound or copied directly into the Contract Documents to the extent referenced. Such standards are made a part of the Contract Documents by reference.
   B. Publication Dates: Comply with standards in effect as of date of the Contract Documents unless otherwise indicated.
   C. Copies of Standards: Each entity engaged in construction on Project should be familiar with industry standards applicable to its construction activity. Copies of applicable standards are not bound with the Contract Documents.
      1. Where copies of standards are needed to perform a required construction activity, obtain copies directly from publication source.
1.2 ABBREVIATIONS AND ACRONYMS
   A. Industry Organizations: Where abbreviations and acronyms are used in Specifications or other Contract Documents, they shall mean the recognized name of the entities in the following list.

ACI	American Concrete Institute
AHA	American Hardboard Association
AITC	American Institute of Timber Construction
ANSI	American National Standards Institute
APA	APA - The Engineered Wood Association
ASHRAE	American Society of Heating, Refrigerating and Air-Conditioning Engineers
ASTM	ASTM International (American Society for Testing and Materials International)
AWI	Architectural Woodwork Institute
AWPA	American Wood Protection Association (Formerly: American Wood Preservers' Association)
CRI	Carpet and Rug Institute (The)
CRRC	Cool Roof Rating Council
CSA	Canadian Standards Association
CSA	CSA International (Formerly: IAS - International Approval Services)
CSI	Construction Specifications Institute (The)
ETL SEMCO	Intertek ETL SEMCO (Formerly: ITS - Intertek Testing Service NA)
FM Global	FM Global (Formerly: FMG - FM Global)
FSC	Forest Stewardship Council
HPVA	Hardwood Plywood & Veneer Association
ITS	Intertek Testing Service NA (Now ETL SEMCO)
MFMA	Maple Flooring Manufacturers Association, Inc.
MPI	Master Painters Institute
NFPA	NFPA (National Fire Protection Association)
NOFMA	NOFMA: The Wood Flooring Manufacturers Association (Formerly: National Oak Flooring Manufacturers Association)
OPL	Intertak
SDI	Steel Door Institute
SMACNA	Sheet Metal and Air Conditioning Contractors' National Association
UL	Underwriters Laboratories Inc.
USGBC	U.S. Green Building Council
WCLIB	West Coast Lumber Inspection Bureau
WI	Woodwork Institute (Formerly: WIC - Woodwork Institute of California)

   B. Code Agencies: Where abbreviations and acronyms are used in Specifications or other Contract Documents, they shall mean the recognized name of the entities in the following list.

DIN	Deutsches Institut fur Normung e.V.
ICC	International Code Council
ICC-ES	ICC Evaluation Service, Inc.

   C. Federal Government Agencies: Where abbreviations and acronyms are used in Specifications or other Contract Documents, they shall mean the recognized name of the entities in the following list.

EPA	Environmental Protection Agency

   D. Standards and Regulations: Where abbreviations and acronyms are used in Specifications or other Contract Documents, they shall mean the recognized name of the standards and regulations in the following list.

ADAAG	Americans with Disabilities Act (ADA) Architectural Barriers Act (ABA) Accessibility Guidelines for Buildings and Facilities Available from U.S. Access Board
CFR	Code of Federal Regulations Available from Government Printing Office

   E. State Government Agencies: Where abbreviations and acronyms are used in Specifications or other Contract Documents, they shall mean the recognized name of the entities in the following list.

CDHS	California Department of Health Services
CDPH	California Department of Public Health, Indoor Air Quality Section

END OF SECTION 01420

SECTION 01500 - TEMPORARY FACILITIES AND CONTROLS

A. General: Provide temporary construction facilities and temporary controls as required to complete project in accordance with contract documents. Conform to requirements of applicable authorities.
   1. Contact governing authorities to establish extent of required temporary facilities and controls.
B. Temporary power: Provide power service and lighting required for operations. locate branch wiring and distribution boxes to allow service and lighting by means of construction-type power cords.
C. Temporary water and sanitary services: Provide and maintain required drinking water and sanitary facilities with enclosures.
D. Noise, dust, and pollution control: provide materials and equipment necessary to comply with local requirements for noise, dust, and pollution control.
E. Barriers: provide as required to protect adjacent properties from damage from operations and as required by governing authorities.
   1. Provide barricades as required by city or landlord in accordance with all codes, criteria, and details.
   2. Security: secure the site and materials during construction.
F. Cleaning: Control accumulation of waste materials and rubbish. as containers become full, dispose at off-site locations acceptable to applicable authorities.
G. Signs: Subject to approval of owner's project manager.
H. Storage: Limit on-site storage to areas where directed and approved in writing by owner.Provide additional weather-tight, secured, off-site storage if required.
I. Removal and cleaning: Remove construction facilities, clean and repair damage caused by operations or use of temporary facilities.

SECTION 01600 - PRODUCT REQUIREMENTS

A. Contract amount: Based on materials and products listed in contract documents. Materials and products by other manufacturers not listed shall not be used without written approval.
B. Products: Components supplied in quantity shall be interchangeable. Provide new materials unless otherwise indicated or specified.
C. Installation: Install items plumb, level, and in correct relation to adjacent products. secure in place with positive anchorage devices designed and sized to withstand stresses, vibration, and racking.
   1. Comply with manufacturer's recommendations and installation instructions unless more stringent requirements are specified or required by governing authorities.
   2. Where reference standards are noted in specification sections,use the most current edition of the reference standard.
D. Transportation: Transport products to avoid product damage. deliver in undamaged condition in manufacturer's unopened containers or packaging.
E. Handling: Handle products by methods to prevent soiling and damage. Promptly inspect to assure products are correct, complete, and undamaged, and that quantities are correct.
F. Storage: Store materials in accordance with manufacturer's instructions, with seals and labels intact and legible.
G. Protection: Provide coverings to protect products from damage from traffic and construction operations. remove when no longer needed.
H. Specified products: If these specifications include multiple products or manufacturers for an item, select the product of any named manufacturer that meets the specification requirements.

SECTION 01620 - SUBSTITUTIONS AND PRODUCT OPTION

A. Substitutions and product options: Provide products indicated, specified or approved. Requests for substitutions of other products will be considered if submitted in writing after General Contractors bid is approved by owner
   1. Contractor options: Provide specified products and manufacturers. Submit request for substitution for products and manufacturers not specifically named.
   2. Substitutions: Investigate proposed substitutions and determine if equivalent to specified products. Submittals shall include cost or time benefits for the requested substitutions. Failure to indicate cost or time benefit is justification for rejection.
   3. Contractor's representation: Substitution requests are a representation that contractor has investigated proposed products, has determined it meets or exceeds specified products, and waives claims for additional costs that subsequently become apparent.
   4. Approvals: Owner's project manager will judge the acceptability. The owner's project manager reserves the right to reject proposed substitution based on insufficient information. Use only substitutions approved in writing.

SECTION 01700 - EXECUTION AND CLOSEOUT REQUIREMENTS

A. Installer qualifications: Installers shall have minimum five years successful experience installing items similar to those required for project. Individuals in training under direct supervision of experienced installers may be employed.
B. Examination: Commencement of product installation signifies that the installer has examined substrates, areas, and conditions for compliance with manufacturer requirements for tolerances and other conditions affecting performance.
C. Manufacturer's instructions: When work is specified to comply with manufacturers' recommendations or instructions, distribute copies to owner's project manager.
D. Installation: Comply with manufacturer's written recommendations and installation instructions unless more restrictive requirements are specified.
E. Protection: Cover products subject to deterioration with impervious sheet. provide ventilation to avoid condensation and water entrapment.
F. Cutting and patching: Cut and fit components as required. Patch disturbed areas to match adjacent materials and finishes.
   1. Refinishing: Refinish entire surfaces as necessary to provide even finish to match adjacent finishes. refinish continuous surfaces to nearest intersection. for an assembly, refinish the entire unit.
G. Final cleaning: Clean exposed interior and exterior surfaces. Remove temporary labels, stains, and foreign substances. Polish transparent and glossy surfaces. Vacuum carpeted and soft surfaces. Clean ducts. Clean the site.
H. Substantial completion: Provide documentation stating work is substantially complete. Where owner requires use of space prior to final completion, provide list of items to be completed.
   1. Owner's project manager will review list of any items to be completed and supplement list with items considered incomplete or unacceptable.
I. Final completion: Provide written certification indicating work is in compliance with contract documents; that systems were tested and are operational; and that work is ready for final inspection.
J. Project record documents: Maintain complete and up-to-date record documents. Keep separate from field documents. Submit project record documents, material and finish data, operation and instruction manuals, warranties and bonds at completion.
   1. Submit electronic copy of all project record documents including as-built drawings, warranties, and all product shop drawing submittals..
K. Warranties: Provide warranties as specified, signed by contractor and manufacturer. Warranty form shall be approved by owner.
   1. Warranties shall be in addition to and, regardless of warranty wording, not a limitation of other rights the owner may have against contractor under contract documents and as prescribed by law.

L. Submit, upon completion of the project, the following paperwork:
   1. General contractor's final unconditional waiver of lien.
M. Lien waivers and affidavit shall be original documents and be notarized. With all required Texas Property Code language and requirements.
   1. General contractor's affidavit.
   2. Final unconditional waivers of lien from each subcontractor.
   3. Complete list of subcontractors, including addresses and telephone numbers.
   4. Certificate of occupancy.
   5. One-year warranty.
   6. Approved certified air-balance report.
   7. Operation and maintenance manuals.

Site Construction

SECTION 02200 - TERMITE CONTROL
PART 1 - GENERAL
1. Not Used
2. Installer shall have a minimum of three years experience in such installations. The chemicals used shall be approved by Federal, State, and local authorities.
3. The treatment shall be considered "pre-construction" type. Coordinate the placement of all chemicals with other trades working on the project. Provide adequate ventilation for the protection of all workmen.
4. Only the portion under the building and extending 5'-0" beyond the outside face of the building shall be treated. All other portions of the project site are excluded from treatment.
5. Chemicals shall be applied before the slab on grade and adjacent sidewalks are poured, but after all backfilling and utility trenching in complete.
6. Chemicals shall be compatible with the foundation insulation (Styrofoam) if applicable.
7. Installer shall provide a standard written warranty to the Owner. The Owner intends to contract for continuing service as required to maintain the bond. At a minimum, warrant against termite infestation for a period of one (1) year from date of Substantial Completion, including treatment of termite protection and all repairs without cost to the Owner. Installer shall offer to the Owner a continuing service and a bond to pay for any damage caused by termites or other wood boring insects.

PART 2 - PRODUCTS
1. Soil treatment chemicals and installation shall be provided by a local company registered with the state to provide and install termite protection.
2. Treatment shall be provided by Terminix, Orkin, or another company as approved by the Architect during the bidding process.

PART 3 - EXECUTION
1. Apply chemical to the soil under and around the building in strict accordance with federal, state and local regulations. Chemicals shall be delivered to the site in new containers that clearly state the active ingredients on the label.
2. Apply chemicals at the rate recommended for pre-construction, slab-on-grade work. Minimum rates shall be 1.5 gallons per 10 square feet as an overall treatment under the slab areas and 2 gallons per 5 lineal feet along foundation walls and other vertical penetrations. Utility trenches shall receive special treatment within the building and 5' beyond the foundation walls.
3. Provide necessary equipment and services to place the chemicals at soil depth to adequately protect from subterranean termite infestation. Apply chemicals before the installation of the porous fill and vapor barrier.

RELEASE FOR CONSTRUCTION
AS NOTED ON PLANS REVIEW
DEPARTMENT OF SERVICES
LEE'S SUMMIT, MISSOURI
05/12/2020

CASCO
12 Summer Drive, Suite 100, St. Louis, MO 63143 T 314.781.2311

MIDLAND
GENERAL CONTRACTORS INCORPORATED

Starbucks & Medical Office

155 S.W. MO-150 HWY
LEE'S SUMMIT, MO 64802

CONSTR. DOC. & REVISIONS

No.	Description	Date
	Owner Review	05/12/20

CASCO DIVERSIFIED CORPORATION
ARCHITECTURAL
CERTIFICATE OF AUTHORITY
#000329 12/31/21

STATE OF MISSOURI
KEYMA L. BULLOCK
NUMBER
A-2004011669
ARCHITECT

PROFESSIONAL OF RECORD
BULLOCK, KEYMA L.
License NO. 2004011669
Expiration Date 12/31/20

Drawn By/Checked By: RMT/MDS
Project Number 320488

Permit Date 06-17-20

SPECIFICATIONS

G010

RELEASE FOR CONSTRUCTION
AS NOTED ON PLANS REVIEW
DEPARTMENT OF DEVELOPMENT SERVICES
LEE'S SUMMIT, MISSOURI
05/17/2020

Concrete

SECTION 03300 - CAST-IN-PLACE CONCRETE
SUMMARY
A. Cast-in-place concrete, including formwork, reinforcement, concrete materials, mixture design, placement procedures, and finishes, for the following:
1. Footings.
2. Foundation walls.
3. Slabs-on-grade.
SUBMITTALS
A. Product Data: For each type of product indicated.
B. Shop Drawings:
1. Reinforcing:
a. Detail reinforcing in accordance with ACI 315. Indicate reinforcement sizes, spacings, locations and quantities of reinforcing, bending and cutting schedules, splicing, and supporting and spacing devices.
b. Indicate embedded items.
2. Slab Layouts: Dimension locations of control, expansion, and construction joints. Relate to building grid lines.
C. Design Mixtures: For each concrete mixture. Submit alternate design mixtures when characteristics of materials, Project conditions, weather, test results, or other circumstances warrant adjustments.
1. Indicate amounts of mixing water to be withheld for later addition at Project site.
D. Certifications: Submit mill certificates for cement, aggregates, and reinforcing.
MATERIALS
A. Steel Reinforcement:
1. Reinforcing Bars: Deformed.
a. Use salvaged bars whenever available.
b. Minimum recycled content: 60%
2. Plain-Steel Welded Wire Reinforcement: ASTM A 185, plain, fabricated from as-drawn steel wire into flat sheets.
1.1 B. Concrete Materials:
1. Portland Cement: ASTM C 150, Type I, gray, supplemented with 50% [fly ash] [ground granulated blast-furnace slag].
2. Aggregate: Normal weight.
3. Water: ASTM C 94/C 94M.
4. Admixtures: Provide admixtures certified by manufacturer to be compatible with other admixtures and that will not contribute water-soluble chloride ions exceeding those
1.2 permitted in hardened concrete. Do not use calcium chloride or admixtures containing calcium chloride.
a. Air-Entrainment: ASTM C 260.
b. Water-Reducing Admixture: ASTM C 494/C 494M, Type A.
c. High-Range, Water-Reducing Admixture: ASTM C 494/C 494M, Type F.
d. High-Range, Water-Reducing and Retarding Admixture: ASTM C 494/C 494M, Type G.
e. Accelerator ASTM C 494, Type C or E, non-corrosive, non-chloride.
C. Fiber Reinforcement: Synthetic, polypropylene.
1. Fibrillated polypropylene micro-fibers engineered and designed for use in concrete, complying with ASTM C 1116/C 1116M, Type III
D. Waterstops: Flexible rubber.
E. Plastic Vapor Retarder: ASTM E 1745, Class A. Include manufacturer's recommended adhesive or pressure-sensitive joint tape.
1.3 F. Curing Materials: Waterborne, monomolecular film forming, manufactured for application to fresh concrete.
G. Related Materials:
1. Expansion- and isolation-joint-filler strips ASTM D 1751, asphalt-saturated cellulosic fiber or ASTM D 1752, cork or self-expanding cork.
2. Bonding Agent: ASTM C 1059/C 1059M, Type II, non-redispersible, acrylic emulsion or styrene butadiene.
3. Non-Shrink Grouts: ASTM C 1107, Grade B; non-shrink non-catalyzed natural aggregate grout; minimum compressive strength of 7000 PSI at 28 days; 25 to 30 second flow when tested in accordance with ASTM C 939 at 45 to 90 degrees F; cement gray in color
4. Form Release Coating: Water based type; VOC <150g/l; Nox-Crete "Utility Release. Cresset Chemical Company Crete 20_VOC;" or approved; non staining.
H. Repair Materials:
1. Repair Underlayment: Cement-based, polymer-modified, self-leveling product that can be applied in thicknesses from 1/8 inch(3.2 mm) and that can be feathered at edges to match adjacent floor elevations.
a. Cement Binder: ASTM C 150, portland cement or hydraulic or blended hydraulic cement as defined in ASTM C 219.
b. Primer: Product of underlayment manufacturer recommended for substrate, conditions, and application.
c. Aggregate: Well-graded, washed gravel, 1/8 to 1/4 inch(3.2 to 6 mm) or coarse sand as recommended by underlayment manufacturer.
d. Compressive Strength: Not less than 4100 psi(29 MPa) at 28 days when tested according to ASTM C 109/C 109M.
2. Repair Overlayment: Cement-based, polymer-modified, self-leveling product that can be applied in thicknesses from 1/8 inch(3.2 mm) and that can be feathered at edges to match adjacent floor elevations.
a. Cement Binder: ASTM C 150, portland cement or hydraulic or blended hydraulic cement as defined in ASTM C 219.
b. Primer: Product of topping manufacturer recommended for substrate, conditions, and application.
c. Aggregate: Well-graded, washed gravel, 1/8 to 1/4 inch(3.2 to 6 mm) or coarse sand as recommended by topping manufacturer.
d. Compressive Strength: Not less than 5000 psi(34.5 MPa) at 28 days when tested according to ASTM C 109/C 109M.
1.4 INSTALLATION
A. Floor and Slab Finishes:
1. Float: Surfaces to receive trowel finish.
2. Trowel: Surfaces exposed to view, and surfaces to be covered with resilient flooring, carpet, ceramic or quarry tile set over a cleavage membrane, paint, or another thin-film-finish coating system.
3. Trowel and Fine Broom: Surfaces to be covered with ceramic or quarry tile installed by either thickset or thin-set method.
4. Broom: Exterior concrete platforms, steps, and ramps.
1.5 FIELD QUALITY CONTROL
A. Testing: By [Owner] [Contractor]-engaged agency.
B. Inspections: By Owner-engaged special inspector.
END OF SECTION 03300

SECTION 03350 - CONCRETE FINISHING
1.1 SUMMARY
A. Section Includes:
1. Concrete Sealer
2. Colored Concrete Sealer.
1.2 SUBMITTALS
A. Qualification Data: For qualified Applicator.
B. Maintenance Data: For SealSource to include in maintenance manuals.
C. Warranty: Special warranties specified in this Section
1.3 WARRANTY
A. Special Warranty: Manufacturer's standard form in which manufacturer agrees to repair or replace color sealant that fail(s) in materials or workmanship within specified warranty period.
1. Warranty Period: Five years from date of Substantial Completion.
1.4 MANUFACTURERS
A. Manufacturers: Subject to compliance with requirements, provide products by one of the following:
1. SealSource, LC.
2. Ameripolish
1.5 CONCRETE SEALER
A. VOC Content: Liquid floor treatments shall have a VOC content of 200 g/L or less when calculated according to 40 CFR 59, Subpart D (EPA Method 24).
B. SealSource Harden X Salt Guard
C. Ameripolish Proguard Stain Shield
1.6 COLORED CONCRETE SEALER
A. VOC Content: Liquid floor treatments shall have a VOC content of 200 g/L or less when calculated according to 40 CFR 59, Subpart D (EPA Method 24).
B. SealSource KromaPolish.
C. Ameripolish Solvent Based Dye
1.7 PREPARATION
A. Inspect existing slab for excessive cracking, spalling, or rock pockets. Clean deficient areas and patch with an all-purpose, non-shrink, cementitios grout.
B. Aggressively grind concrete to expose large aggregate.
END OF SECTION 03350

Rough Carpentry

SECTION 06010 - ROUGH CARPENTRY
PART 1 - GENERAL
1. Grading Rules: Southern Pine - latest edition of Standard Grading Rules, Southern Pine Inspection Bureau (SPIB). Douglas Fir, Western Larch, Western Hemlock- latest edition of Standard Grading Rules published by Western Wood Products Association (WWPA) or West Coast Lumber Inspection Bureau (WCLIB). All material manufactured in accordance with U.S. Product Standard and shall carry grade trademarks on each piece.
2. Workmanship: Employ only skilled carpenters. All carpentry shall be accurately set, plumb, true, even and securely fastened in accordance with referenced standard or manufacturer's recommendations.

PART 2 - PRODUCTS
1. Materials:
a. Studs, beams, planks, rafters, headers, exterior wall top plates: S4S, #1 SP (Southern Pine) or #1 DF-L, air-dried to a moisture content of nineteen (19) percent or less. Truss lumber to be per design Engineer's specifications and 06190. Structural Composite Lumber to be laminated veneer lumber with the following minimum design values: Fb=2,600 psi, Fv=285 psi, E=2,000,000 psi
b. Plates, blocking, furring, and bracing: S4S, #2SP (Southern Pine) or #2 DF-L or better.
c. Studs: Bearing walls, posts and partitions to be # 2 S-P (Southern Pine) or #2 DF-L. Non-bearing walls or partitions to be No. 2, Construction Grade or better. All studs shall be air-dried to a maximum moisture content nineteen (19) percent. Bearing wall studs at sixteen (16) inches on center. Non-bearing wall studs at sixteen (16) inches on center, unless local code requires closer spacing.
d. Roof Sheathing: 19/32" CDX exterior grade plywood APA rated 24/0, and conforming with Product Standard PS-1-80. Provide spacer clips. Install with face grain perpendicular to supports. Nailing to remain exposed for inspection if local code requires.
e. Exterior Wall Sheathing: 15/32" CDX exterior grade plywood APA rated 16/0. All exterior walls are shear walls. Nailing to remain exposed for inspection. Install full depth 2x blocking at all panel edges (except where 3x framing is required by shear wall schedule). Provide additional framing at wall ends and breaks for Simpson Anchors. Cover all sheathing with building wrap (Tyvek) installed starting from the bottom, with 6 inch overlaying laps. Lap vertical joints 12 inches.
f. Mechanical Platform Floor Sheathing: 23/32" tongue and groove plywood APA rated sturd-i-floor wood structural panel (24 span rating), fasten to supports with 10d at 6" o.c. at panel edges and 12" o.c. in field. Install panels with long dimension perpendicular to supports. Install full depth 2x blocking at all panel edges.
g. Preservative treatment: All lumber in contact with concrete or exposed to weather shall be pressure treated in compliance with AWPA Standards C1 & C2, 15% maximum moisture content equal to MCQ or ACQ as approved by the EPA.
2. Simpson Connectors: Metal ties, connections, tie-downs, hold-downs, straps, and related items shall be those of the Simpson "Strong-Tie" Connectors, without substitution and based on their latest catalog. All holes shall be filled with he proper nail or bolt as specified by manufacturer. Reference drawings for metal connections and include connectors based on the following criteria:
a. All exterior walls shall be tied to the top and bottom of studs, columns, posts, and related elements.
b. All interior bearing shall be tied to the top and bottom of studs, columns, posts, and related elements.
c. All roof trusses shall have ties connecting them to the bearing plates, beams, and related items.
d. All conventional roof members shall have ties connecting them to plates, beams, and other structural elements.
3. Fasteners: All rough hardware and fasteners used on the exterior shall be corrosion resistant and non-staining. Unless called out otherwise, they shall be galvanized or stainless steel. 2"x2"x3/16" plate washers shall be used under bolt heads and nuts against wood. Use heavy plate or mallable iron washers for all bolts designed to act in tension, such as hold down anchors.

PART 3 - EXECUTION
1. All wall penetrations shall have a minimum of double studs each side of the opening, one full height to the top plate and one becoming a cripple stud supporting a header. If the opening width exceeds five (5') feet, provide an additional stud extending to the top plate. If the opening exceeds seven feet (7') provide an additional cripple stud. If a wall height exceeds ten (10) feet, provide 2x bridging, same width as wall, preferably at mid-height, but not to exceed intervals of 8 feet.
2. All dimensions and measurements shall be field verified to produce proper fit and function. All members shall be self fitting without fillers. Fasteners and anchorages shall bring the members into a tight fit without movement when a dead and live load are superimposed.
3. All framing lumber, blocking, studs, joists and related members shall be closely fitted with square or shaped ends, accurately set to required lines and level, plumb and true in all dimensions. Members on a slope shall be accurately cut to fit the angles. All wood members shall be nailed or bolted to the abutting material to hold them firmly in place. No framing member shall be diminished in cross sectional area to accommodate pipes, wires, or conduits without the approval of the Architect. Studs are sized to accommodate a 3/4" hole when drilled in the middle of the width. Bolt holes shall be the same size as the nominal size of the bolt used. Retighten all nuts prior to closing in. Pre-drill all holes for 20d and larger nails and all lag bolts. DO NOT bore or notch joists, rafters, headers, or beams. Holes through sills, plates, studs, and double plates in interior/exterior bearing walls and shear wall framing shall not exceed 1/3 the plate or stud width. Center all bored holes in wall framing.
4. Provide wood blocking to support wire shelves, casework, paper towel dispensers, toilet paper holders, grab bars, mirrors, and electrical/plumbing/HVAC items as required. Provide solid blocking for all rafters more than 10 inches deep at 10'-0" o.c., and for all floor joists 8 inches or more in depth at 8'-0" o.c. maximum.

Wood Trusses

SECTION 06190 - WOOD TRUSSES
PART 1 - GENERAL
1. Pre-engineered wood trusses shall be used for roof framing. Sizing of members and design of system to be by the fabricator. Fabricator to supply necessary engineering certification to comply with Local Building Codes. Truss shop drawings shall be stamped by a Professional Engineer registered in the state of the project construction. Copies will be submitted to the Architect for approval. The Contractor shall submit copies of design shop drawings to local design review departments, if required. The truss configurations indicated on the drawings are schematic in nature to show required spans and roof slopes. The truss manufacturer shall be solely responsible for the structural design of the trusses, including fabrication and erection.
2. Trusses shall be fabricated by a certified member of the Truss Plate Institute. Design, fabrication and erection shall conform to Truss Plate Institute Standards. Connector plates shall be ICBO approved with a minimum size of 2" x 4". All chord members shall have lumber grade stamps; all web members from the same lumber grade with at least 50% of the web members bearing a grade stamp.
3. Design Truss Loadings: See Plans and/or structural calculations.
a. Verify Design Loads meet or exceed ASCE 7-10 for live and snow loading. Total load deflection shall be limited to L/240.
b. The truss manufacturer shall be responsible for the design of all trusses used as drag struts and shall ensure such trusses are placed as shown on the plans. The amount of load transmitted laterally by the member shall be a minimum of 2000 pounds unless noted otherwise on the framing plans.
c. The truss manufacturer shall select and supply all truss hold down plates/connectors necessary to resist the net design uplift forces determined based on the building code prescribed combinations of the design loads shown on the drawings. The maximum design dead load considered to resist wind uplift in such combinations shall be the minimum expected to be in place.
4. Truss manufacturer to submit erection plan and show drawings, bearing the seal of an Engineer registered in the state conforming to the design criteria specified herein for approval and prior to fabrication. Submitted data to contain design loadings, allowable stress increases employed, calculated truss member stresses, rated load capacity of the truss member connection size, species, and stress-grade of lumber employed, fabrication details indicating location of connectors, handling and erection instructions, truss to truss connection details, and all bracing requirements of chords and webs.
5. Failure to furnish any of the above required data will be regarded as ample reason for the rejection of the shop drawings. The Contractor shall approve fabrication drawings indicating size, shape, and layout prior to submittal for review by the Architect.
PART 2 - PRODUCTS
1. All lumber shall conform to the stress ratings of for the species and grades as set out in the official grading rules of the appropriate lumber association or as listed in referenced design standards. All top and bottom chords shall be sized to support overhangs and interior attachments. All overhangs greater than 3'-0" shall have 2x6 top chords
2. Connector plates shall be a minimum of 0.036" in thickness and shall be manufactured from material meeting the requirements of ASTM A446 Grade A steel. Plates to be galvanized in accordance with ASTM A525 G60 Coating Class "C" specifications.
3. The truss manufacturer shall be responsible for all truss to truss connections, all truss to girder connections, and if the truss is made up of more than one truss, the truss to truss connections.

PART 3 - EXECUTION
1. Fabricate all trusses and components in a properly equipped permanent manufacturing facility, by experienced workmen using precision cutting and fabrication equipment under the direct supervision of a qualified foreman.
2. Carefully inspect locations where trusses are to be installed. Notify the Architect of any conditions that would adversely affect the installation or structural capacity of the trusses.
3. Install trusses true and plumb and securely anchored to the top plate with hurricane ties at each end. Erection and installation shall be in accordance with written instructions from the manufacturer.
3. The truss manufacturer shall be responsible for all truss to truss connections, all truss to girder connections, and if the truss is made up of more than one truss, the truss to truss connections.
SECTION 06200 - FINISH CARPENTRY

Metals

SECTION 05500 - METAL FABRICATIONS
1.1 SUMMARY
A. Steel framing and supports for mechanical and electrical equipment.
B. Steel framing and supports for applications where framing and supports are not specified in other Sections.
C. Shelf angles.
D. Metal bollards.
1.2 SUBMITTALS
A. Product Data: For the following:
1. Paint products.
2. Grout.
3. All prefabricated products.
B. Shop Drawings: Show fabrication and installation details for metal fabrications.
1. Include plans, elevations, sections, and details of metal fabrications and their connections. Show anchorage and accessory items.
2. Provide templates for anchors and bolts specified for installation under other Sections.
C. Welding certificates.
1.3 PRODUCTS
A. Materials: Steel plates, shapes, and bars, steel pipe, slotted channel framing.
1. Provide steel W-shapes, channels, angles, M-shapes, S-shapes with a minimum recycled content of 60 percent.
B. Miscellaneous Framing and Supports:
1. Steel framing and supports for mechanical and electrical equipment, applications where framing and supports are not specified in other Sections.
2. Galvanize where indicated.
3. Prime with zinc-rich primer where indicated.
C. Loose steel lintels, galvanized at exterior walls.
D. Shelf angles, galvanized.
E. Steel weld plates and angles not specified in other Sections, for casting into concrete.
F. Metal Bollards: Schedule 40 steel pipe.
END OF SECTION 05500

Wood and Plastics

SECTION 06160 - ROUGH INTERIOR FRAMING
1.1 SUMMARY
A. Wood blocking and nailers.
B. Utility shelving.
C. Plywood backing panels.
1.2 MATERIALS
A. Wood-Preservative-Treated Lumber:
1. Preservative Treatment: AWPA C2 with chemicals containing no arsenic or chromium.
a. AWPA C31 (inorganic boron) may be used in protected locations.
2. Application: Items indicated and as follows:
a. Items in contact with roofing or waterproofing.
b. Items in contact with concrete or masonry.
c. Framing less than 18 inches(460 mm) above ground in crawlspaces.
d. Floor plates installed over concrete slabs-on-grade.
B. Fire-Retardant-Treated Materials:
1. Interior Type A: Treated materials shall have a moisture content of 28 percent or less when tested according to ASTM D 3201 at 92 percent relative humidity. Use where exterior type is not indicated
2. Application: Items indicated and as follows:
a. Concealed blocking.
b. Plywood backing panels.
C. Dimension Lumber Framing: For items of dimension lumber size, provide Construction or No. 2 grade lumber with 19 percent maximum moisture content of any species.
D. Plywood backing panels for telephone and electrical equipment: made with adhesives containing no urea formaldehyde.
E. Fasteners: Hot-dip galvanized steel where exposed to weather, in ground contact, in contact with treated wood, or in area of high relative humidity.
1. Construction Adhesive:
a. VOC Limits: 70 g/L
2. Wood Adhesive:
a. VOC Limits: 30 g/L
3. Contact Adhesive:
a. VOC Limits: 80 g/L
END OF SECTION 06160

Thermal and Moisture Protection

SECTION 07115 - BITUMINOUS DAMPPROOFING
1.1 SUMMARY
A. Cold-applied, emulsified-asphalt dampproofing applied to the following surfaces:
1. Exterior, below-grade surfaces of concrete and masonry foundation walls.
2. Back side of [concrete] [and] [masonry] retaining walls, below grade.
3. Exterior face of inner wythe of exterior masonry cavity walls.
4. Interior face of exterior [concrete] [and] [masonry] walls, above grade.
1.2 MATERIALS
A. Cold-Applied, Emulsified-Asphalt Dampproofing:
1.3 INSTALLATION
A. Cold-Applied, Emulsified-Asphalt Dampproofing:
1. Concrete Foundations and Parged Masonry Foundation Walls: Two brush or spray coats, one fibered brush or spray coat, or one trowel coat.
2. Unparged Masonry Foundation Walls: Primer [and two brush or spray coats, primer and one fibered brush or spray coat, or primer] and one trowel coat.
3. Unexposed Faces of Concrete Retaining Walls: One brush or spray coat.
4. Unexposed Faces of Masonry Retaining Walls: Primer and one brush or spray coat.
5. Exterior Face of Inner Wythe of Cavity Walls: Primer and one brush or spray coat.
6. Interior Face of [Single-Wythe] Exterior Masonry Walls: Primer and one brush or spray coat.
END OF SECTION 07115

SECTION 07210 - BUILDING INSULATION
1.1 SUMMARY
A. Applications:
1. Perimeter insulation under slabs-on-grade.
2. Perimeter wall insulation (supporting backfill).
3. Concealed building insulation.
4. Vapor retarders.
5. Sound attenuation insulation.
1.2 PERFORMANCE REQUIREMENTS
A. Plenum Rating: Glass [Slag-wool-fiber/rock-wool]-fiber insulation rated for resistance against erosion and mold growth per UL 181.
1.3 MATERIALS
A. Insulation:
1. All insulation materials located within the waterproof membrane must be certified as low emitting. Certification must be based upon the California Department of Health Services *Standard Practice for The Testing Of Volatile Organic Emissions From Various Sources Using Small-Scale Environmental Chambers, including 2004 Addenda or a jurisdictionally* recognized standard using equivalent testing methodologies and VOC thresholds.
2. Uncontained Extruded-Polystyrene Board:
a. Type IV, 1.60 lb/cu. ft.(26 kg/cu. m).
b. Minimum recycled content: 20%
3. Unfaced Glass-Fiber Blanket:
a. Type I.
b. Minimum recycled content: 20%
4. Kraft-Faced, Glass-Fiber Blanket Insulation: ASTM C 665, Type II (non-reflective faced), Class C (faced surface not rated for flame propagation); Category 1 (membrane is a vapor barrier).
B. Vapor Retarders: Foil scrim kraft FSK 25.
C. Auxiliary Insulating Materials:
1. Eave ventilation troughs.
2. Insulation fasteners.
END OF SECTION 07210

Drainage EIFS

SECTION 07240 - DRAINAGE EIFS with FLUID-APPLIED MEMBRANE

PART 1 GENERAL

1.01 SUMMARY: Provide an adhesively attached drainage Exterior Insulation and Finish System as specified in this Section, and as needed for a complete and proper installation.

1.02 RELATED WORK: Section 06200- Rough & Finish Carpentry; product specification for plywood EIFS substrate. Section 09260- Gypsum Wallboard & Partition System; product specification for EIFS substrate. Section 09860- Exterior Masonry Coatings; product specification for EIFS-based coating system on existing exterior masonry surfaces. *(renovation, if applicable)*

1.03 SUBMITTALS:

A. Selected EIFS installer shall review the design documents thoroughly. Shop drawings shall be submitted only if exceptions or deviations are taken with design documents. Shop drawings shall specifically identify any recommendations or corrections required to maintain compliance with manufacturer's standards and warranty conditions, including but not limited to penetrations, sealants and flashings. Any exceptions or deviations to design documents shall be submitted to the selected General Contractor for review and approval by the design professional.

B. Given the current litigation associated with this product, as an inducement to accept the EIFS product, the EIFS manufacturer and installer shall agree to indemnify, defend and hold harmless the Owner, Architect, Engineer and the Professional of Record against any and all claims, damages, suits, actions, legal costs and expenses directly and/or indirectly related to litigation associated with the EIFS system.

C. A representative of the EIFS manufacturer shall be contacted to attend a pre-installation meeting prior to the start of the EIFS application and if deemed necessary, to provide job-site observations and documentation as noted in Part III of this section.

D. Furnish manufacturer's most current system specification, technical data sheets and LEED compliance information sheets for each system component and most current code compliance report for the system being used.

E. Submit 8" X 8" samples of each texture and color to be used on the project for approval.

F. Review of submittal by Professional of Record shall be limited to verifying aesthetic compliance with design, EIFS System type and product components.

G. Any Request for Product Substitution must be submitted per Section 01340 - Submittals.

1.04 QUALITY ASSURANCE: General Contractor shall schedule a pre-construction meeting to include EIFS manufacturer's local representative, EIFS contractor, sealant and flashings contractor to review system components, critical details, proper sequencing and scheduling. The Drainage Exterior Insulation and Finish System manufacturer's specifications shall be followed completely and any deviations, due to job-site conditions, shall be brought to the attention of the EIFS manufacturer and General Contractor for their review and comments.

1.05 WARRANTY:

A. Manufacturer's Warranty: The Contractor shall provide the EIFS Manufacturer's Standard 10-Year Limited Materials & Labor Warranty in the Building Maintenance Manuals submitted to the owner.

B. Installer's Warranty: The Contractor shall include a copy of the EIFS installer's warranty for all work provided, for a term of 1 year after the Date of Substantial Completion, in the Building Maintenance Manuals submitted to the owner.

PART 2 PRODUCTS

2.01 DRAINAGE EIFS MANUFACTURER:

A. The Contractor shall provide and install EIFS where shown on the drawings. No product/ manufacturer substitution is permitted.

B. Acceptable Drainage EIFS:
a.Provide StoTherm Essence NExT by Sto Corp., Atlanta, GA

1. Sheathing: Glass Mat Faced Exterior Sheathing shall be Dens-Glass Gold Sheathing by G-P Gypsum Corporation, Atlanta GA (800/ 947-4497 Northeast US), subject to acceptance by the EIFS manufacturer as part of the warranted EIFS system. Paper-faced exterior gypsum sheathing is NOT an acceptable product substitution.

2. Sheathing at Building Signage: Do NOT provide Glass Mat Faced Exterior Sheathing.

3. Waterproofing Air / Moisture Barrier Membrane: StoGuard (joint treatment & waterproof coating for all exterior sheathing areas and rough openings)
(Note: StoGuard™ may be placed on pressure treated or fire retardant treated wood. The pressure treated or fire retardant treated wood shall be ***clean*** *and* ***dry.****)*

4. Adhesive: Sto Primer/Adhesive-B - one component polymer modified cement based, factory blend adhesive (for use over StoGuard™ treated exterior glass mat faced gypsum sheathing (compliant with ASTM C 1177), exterior cementitious sheathing, exterior grade plywood, Exposure I rated OSB sheathing, concrete, masonry or cement plaster surfaces.)

5. Exterior Insulation Board: Nominal 1.0 lb/ft3 (16 kg/m3) Expanded Polystyrene (EPS) Insulation Board in compliance with ASTM E 2430 and ASTM C 578 Type I requirements. Board thickness minimum 1-1/2" with 3/4" deep v-groove reveals where shown on the drawings, leaving a minimum 3/4" EPS material thickness. EPS Board shall be aged/ air-dried for the equivalent of six weeks prior to installation.

6. Basecoat: *(select a1; select b1 to supplement a1 on surfaces that require waterproofing)*
a. Cementitious Base Coat
1. Sto Primer/Adhesive-B - one component polymer modified cement based factory blended base coat.
b. Waterproof Base Coat
1. Sto Flexyl - two component fiber reinforced acrylic based waterproof base coat mixed with portland cement *(for use as a waterproof base coat to waterproof foundations, parapets, splash areas, trim and other projecting architectural features).*
7. Reinforcing Mesh:
a.Above 8'-0" height at adjacent finish grade: Sto Mesh 4.5 oz/ sq. yd. Standard Reinforcing Mesh.
b.Below 8'-0" height at adjacent finish grade: Sto Armor Mat 15 oz/ sq. yd. Reinforcing Mesh, applied as a secondary reinforcement under Standard Reinforcing Mesh at these wall areas.

8. Textured Finish: Sto Essence DPR Finish - acrylic based textured wall coating with graded marble aggregate and dirt pick-up resistance technology

9. Colors/ Textures for EIFS Finish:
a. Refer to drawings.

10. Accessories: Provide all components required to provide a complete system by a single source as furnished by Plastic Components, Inc., 9051 NW 97th Terrace, Miami, Florida 33178 (800 327-7077) or equivalent.

2.02 PRE-MANUFACTURED FOAM MOULDING:

A. Pre-manufactured Foam Mouldings shall be provided as manufactured by the following:
1. If pre-manufactured foam mouldings are to be supplied versus field applied mouldings, EIFS manufacturer shall be notified to ensure that correct EIFS components are being used and installed according to specifications by specialty foam shop.
B. Specialty foam manufacturers shall conform with specified EIFS components as listed in section 2.01 above.
C. No urethane coatings will be allowed.
D. EIFS contractor shall provide profile as detailed on the drawings.

CASCO
12 Sumwin Drive, Suite 100, St. Louis, MO 63143 T: 314.
MIDLAND
GENERAL CONTRACTORS INCORPORATED

Starbucks & Medical Office
155 S.W. MO-150 HWY
LEE'S SUMMIT, MO 64802

No.	Description	Date
	Owner Review	05/12/20

CONSTR. DOC. & REVISIONS

CASCO DIVERSIFIED CORPORATION
ARCHITECTURAL
CERTIFICATE OF AUTHORITY
#000329 12/31/21

STATE OF MISSOURI
KEYMA L. BULLOCK
NUMBER A-2004011669
ARCHITECT

PROFESSIONAL OF RECORD
BULLOCK, KEYMA L.
License NO. 2004011669
Expiration Date 12/31/20

Drawn By/Checked By:	RMT/MSD
Project Number	320488
Permit Date	06-17-20

SPECIFICATIONS

G011

Drainage EIFS (Continued)

PART 3 EXECUTION

3.01 SURFACE CONDITIONS & PREPARATION: The Contractor shall examine the areas and conditions under which work of this Section will be provided, shall correct conditions detrimental to timely and proper completion of the work, and shall NOT proceed until unsatisfactory conditions are corrected.

A. Remove surface contaminants on concrete and concrete masonry surfaces.

B. Apply conditioner by sprayer or roller to chalking or excessively absorptive surfaces.

C. Replace weather-damaged sheathing and repair damaged or cracked surfaces.

D. Level surfaces to comply with required tolerances.

E. Repair cracks, spalls or damage in concrete or concrete masonry surfaces.

3.02 INSTALLATION:

A. The Drainage EIFS manufacturer's most current installation instructions shall be followed completely, and shall be considered a part of this section as if the manufacturer's specification was included in its entirety. Contact EIFS manufacturer for their most current specification for the StoTherm Essence NExT System specified.

B. Install the work of this section in accordance with the shop drawings and with pertinent requirements of governmental agencies having jurisdiction, anchoring all components firmly into position straight, level, and plumb.

C. The overall minimum base coat thickness shall be sufficient to fully embed the mesh within the base coat so that no mesh color shows through the dry base coat. If mesh color is visible, an additional skim coat of base coat is required to fully cover the color of mesh.

D. EIFS substrate tolerance: Maximum variance from plane shall be 1/4" in 8-feet.

3.03 FIELD VISITS / OBSERVATIONS:

A. EIFS manufacturer representative shall be invited to attend a pre-installation meeting. Upon request, periodic job-site observations of the EIFS installation shall be performed by a representative of the EIFS Manufacturer and/or EIFS Distributor's representative. The EIFS manufacturer's representative shall be contacted to schedule the initial meeting and subsequent visits and shall be given at least one week's notice to schedule the visit.

B. The intent of these specifications is to ensure the system is installed strictly in a manner that will be warranted by the EIFS manufacturer and insurable by property loss underwriters.

END OF SECTION

Thermal and Moisture Protection

SECTION 07590 - THERMOPLASTIC MEMBRANE ROOFING
1.1 SUMMARY
A. Mechanically fastened membrane roofing system.
B. Vapor retarder.
C. Roof insulation.
1.2 SUBMITTALS
A. Product Data: For each type of product indicated.
B. Shop Drawings: For roofing system. Include plans, elevations, sections, details, and attachments to other Work.
1. Base flashings and membrane terminations.
2. Tapered insulation, including slopes.
3. Insulation fastening patterns.
C. Installer Certificates: Signed by roofing system manufacturer certifying that Installer is approved, authorized, or licensed by manufacturer to install roofing system.
D. Manufacturer Certificates: Signed by roofing manufacturer certifying that roofing system complies with requirements specified in "Performance Requirements" Article.
1. Submit evidence of meeting performance requirements.
E. Qualification Data: For Installer and manufacturer.
F. Product Test Reports: Based on evaluation of comprehensive tests performed by manufacturer and witnessed by a qualified testing agency, for components of roofing system.
G. Warranties: Special warranties specified in this Section.
1.3 QUALITY ASSURANCE
A. Exterior Fire-Test Exposure: Class A.
1.4 WARRANTY
A. Manufacturer's Materials and Workmanship Warranty: 15 <Insert number> years.
B. Installer's Warranty: Two years.
1.5 MATERIALS
A. Thermoplastic Polyolefin Roofing Membrane: White, fabric-reinforced thermoplastic sheet, 60 mils (1.5 mm) thick.
1. Slopes less than or equal to 2:12, min. Solar Reflectance Index of 78.
2. Slopes greater than 2:12, min. Solar Reflectance Index of 29.
B. Sheet Flashing: Unreinforced thermoplastic polyolefin.
C. Substrate Board: Perlite board.
D. Vapor Retarder: Polyethylene.
E. Roof Insulation: Polyisocyanurate board.
1. Minimum Recycled Content: 30% post-consumer.
2. Tapered Boards: 1/4 inch per 12 inches(1:48).
F. Walkways: Pads, Rolls, Rubber.

1.6 INSTALLATION
A. Roof Insulation:Mechanically fastened and adhered.

B. Roofing Membrane: Mechanically fastened.
1. Attachment Method for Mechanically Fastened: [In splice] [Through membrane].
1.7 FIELD QUALITY CONTROL
A. Testing Agency: Owner engaged.
END OF SECTION 07590

SECTION 07610 - SHEET METAL ROOFING
1.1 SUMMARY
A. Standing-seam metal roofing.
1.2 SUBMITTALS
A. Product Data: For each product indicated. Include details of construction relative to materials, dimensions of individual components and profiles, and finishes.
B. Shop Drawings: Show fabrication and installation layouts of sheet metal roofing, including plans, elevations, and keyed references to termination points. Distinguish between shop- and field-assembled work.
C. Warranties: Special warranties specified in this Section.
1.3 QUALITY ASSURANCE
A. Sheet Metal Roofing Standard: SMACNA's "Architectural Sheet Metal Manual".
1.4 WARRANTY
A. Installer's Materials and Workmanship: Two years.
B. Fluoropolymer Finishes: 20 years.
1.5 MATERIALS
A. Roofing Sheet Metals:
1. Metallic-Coated Steel Sheet: Aluminum-zinc alloy-coated steel sheet with smooth, flat surface.
a. Coil-Coated Finish: Two-coat fluoropolymer.
2. Slopes less than or equal to 2:12, min. Solar Reflectance Index of 78.
3. Slopes greater than 2:12, min. Solar Reflectance Index of 29.
B. Underlayment: Polyethylene sheet.
END OF SECTION 07610

Thermal and Moisture Protection (Continued)

SECTION 07620 - SHEET METAL FLASHING AND TRIM
1.1 QUALITY ASSURANCE
A. Quality Standard(s): SMACNA's "Architectural Sheet Metal Manual".
1.2 WARRANTY
A. Fluoropolymer Finishes: 20 years.
1.3 MATERIALS
A. Sheet Metals:
1. Stainless-Steel Sheet: 2D (dull, cold rolled) finish with smooth, flat surface.
2. Metallic-Coated Steel Sheet: Zinc-coated (galvanized) steel sheet with smooth, flat surface.
a. Coil-Coated Finish: Two-coat fluoropolymer.
1) Kynar 500
2) Hylar 5000
3. Metallic-Coated Steel Sheet: Zinc-coated (galvanized) steel corrugated sheet with smooth, flat surface.
a. Coil-Coated Finish: Two-coat fluoropolymer.
1) Kynar 500
2) Hylar 5000
B. Underlayment: Polyethylene sheet.
1.4 PRODUCTS
A. Butyl Sealant: ASTM C 1311, single-component, solvent-release butyl rubber sealant, polyisobutylene plasticized, heavy bodied for hooked-type expansion joints with limited movement.
B. Polyurethane Sealant: moisture-curing, single-component non-sag polyurethane sealant.
C. Manufactured Flashing and Trim:
1. Through-Wall Ribbed Sheet Metal Flashing and Counterflashing: Stainless steel.
2. Reglets and Counterflashing: Galvanized steel.
a. Type: [Surface-mounted] [EIFS].
b. Accessories: [Flexible-flashing retainer] [Counterflashing wind-restraint clips].
D. Formed Roof Drainage Fabrications: Including [downspouts][parapet scuppers] [conductor heads] [and] [splash pans].
E. Formed Low-Slope Roof Fabrications: Including [fascia cap] [copings] [roof expansion-joint covers] [base flashing] [counterflashing] [flashing receivers] [roof-penetration flashing] [and] [roof-drain flashing].
F. Formed Wall Fabrications: Including [through-wall flashing] [opening flashings in frame construction] [and] [wall expansion-joint cover].
G. Miscellaneous Formed Fabrications: Including equipment support flashing.
END OF SECTION 07620

SECTION 07720 - ROOF ACCESSORIES
1.1 SUMMARY
A. Roof curbs.
B. Copings.
1.2 SUBMITTALS
A. Shop Drawings: Show layouts of manufactured roof specialties, including plans and elevations. Identify factory- vs. field-assembled work. Include the following:
1. Details for fastening, joining, supporting, and anchoring manufactured roof specialties including fasteners, clips, cleats, and attachments to adjoining work.
2. Details for expansion and contraction.
B. Product Test Reports: Based on evaluation of comprehensive tests performed by a qualified testing agency, verifying compliance of copings with performance requirements.
1.3 QUALITY ASSURANCE
A. Sheet Metal Standard: SMACNA's "Architectural Sheet Metal Manual."
1.4 WARRANTY
A. Special Warranty on Painted Finishes: 20 years from date of Substantial Completion.
1.5 PRODUCTS
A. Butyl Sealant: ASTM C 1311, single-component, solvent-release butyl rubber sealant, polyisobutylene plasticized, heavy bodied for hooked-type expansion joints with limited movement.
B. Polyurethane Sealant: moisture-curing, single-component non-sag polyurethane sealant.
C. Roof Curbs: Provide metal roof curbs, internally reinforced and capable of supporting superimposed live and dead loads, including equipment loads and other construction to be supported on roof curbs. Fabricate with welded or sealed mechanical corner joints, with integral metal cant and integral formed mounting flange at perimeter bottom. Coordinate dimensions with rough-in information or Shop Drawings of equipment to be supported.
1. Factory insulate curbs with 1-1/2-inch-(38-mm-) thick, cellulosic-fiber board insulation.
2. Curb height may be determined by adding thickness of roof insulation and minimum base flashing height recommended by roofing membrane manufacturer. Fabricate units to minimum height of 12 inches(300 mm), unless otherwise indicated.
D. Copings: Manufactured coping system consisting of formed-metal coping cap in section lengths not exceeding 12 feet(3.6 m), concealed anchorage, concealed splice plates with same finish as coping caps, mitered corner units, and end cap units.
1. Coping Caps: Face leg hooked to continuous cleat with back leg fastener exposed, fabricated from the following exposed metal:
a. Prepainted, Zinc-Coated Steel.
E. Preformed Flashings: Aluminum.
F. Finishes:
1. Prepainted, Metallic-Coated Steel: High performance organic coating.
2. Stainless Steel: 2D.
3. Aluminum: [Mill finish] [Baked enamel] [Clear anodic] [Color anodic] [High-performance organic coating].
1.6 FABRICATION
A. Connections: [Welded] [Sealed].
END OF SECTION 07720

SECTION 07841 - THROUGH-PENETRATION FIRESTOP SYSTEMS
1.1 SUMMARY
A. This Section includes through-penetration firestop systems for penetrations through fire-resistance-rated constructions, including both empty openings and openings containing penetrating items.
1.2 PERFORMANCE REQUIREMENTS
A. Provide through-penetration firestop systems with the following ratings determined per [ASTM E 814] [or] [UL 1479]:
1. F-Rated Systems: F-ratings equaling or exceeding fire-resistance rating of constructions penetrated.
2. T-Rated Systems: For penetrations located outside wall cavities and outside fire-resistance-rated shaft enclosures.
3. L-Rated Systems: Where through-penetration firestop systems are indicated in smoke barriers.
1.3 SUBMITTALS
A. Product Data: For each type of product indicated.
1.4 QUALITY ASSURANCE
A. Installer Qualifications: A firm approved by FMG according to FMG 4991, "Approval of Firestop Contractors."
B. Fire-Test-Response Characteristics: Tested per ASTM E 814 by [UL] [OPL] [ITS]

1.5 MANUFACTURERS
A. VOC Content of Interior Sealants: Provide interior sealants and sealant primers that comply with the following limits for VOC content when calculated according to 40 CFR 59, Subpart D (EPA Method 24):
1. Sealants: 250 g/L.
2. Sealant Primers for Nonporous Substrates: 250 g/L.
3. Sealant Primers for Porous Substrates: 775 g/L.
B. Products: Subject to compliance with requirements, provide one of the through-penetration firestop systems indicated for each application in the Through-Penetration Firestop System.
1.6 MATERIALS
A. Accessories: [Permanent forming/damming/backing materials] [temporary forming materials] [substrate primers] [collars] [and] [steel sleeves] as needed to comply with performance requirements.
1.7 INSTALLATION
A. Identification: Preprinted metal or plastic labels, permanently attached.
1.8 FIELD QUALITY CONTROL
A. Inspection of Installed Firestop Systems: By Owner-engaged agency according to ASTM E 2174 requirements.
1.9 THROUGH-PENETRATION FIRESTOP SYSTEM SCHEDULE
A. Firestop Systems for Metallic Pipes, Conduit, or Tubing:
1. Type of Fill Materials: :
a. Intumescent putty.
B. Firestop Systems for Nonmetallic Pipe, Conduit, or Tubing:
1. Type of Fill Materials:
a. Intumescent putty.
C. Firestop Systems for Insulated Pipes:
1. Type of Fill Materials:
a. Intumescent putty.
D. Firestop Systems for Miscellaneous Electrical Penetrants:
1. Type of Fill Materials:
a. Intumescent putty.
E. Firestop Systems for Miscellaneous Mechanical Penetrants:
1. Type of Fill Materials:
a. Latex sealant.
F. Firestop Systems for Groupings of Penetrants:
1. Type of Fill Materials: One or more of the following:
a. Latex sealant.
b. Intumescent wrap strips.
END OF SECTION 07841

Composite Wall Panels

COMPOSITE WALL PANELS074243 - 3

SECTION 074243 - COMPOSITE WALL PANELS

PART 1 - GENERAL

1.1 SUMMARY
A. Section Includes:
1. Exterior panelized fiber-cement rainscreen cladding system and accessories.

1.2 DEFINITIONS
A. DBVR: Drained and back-ventilated rainscreen system; designed to drain and dry cavity entering water through drainage channels, weeps, and air ventilation.

1.3 ACTION SUBMITTALS
A. Product Data: For each type of product.
1. Include construction details, material descriptions, dimensions of individual components and profiles, and finishes for each type of panel and accessory.
B. Sustainable Design Submittals:
1. Product Data: For recycled content, indicating postconsumer and preconsumer recycled content and cost.
2. Laboratory Test Reports: For ceilings and walls, indicating compliance with requirements for low-emitting materials.
C. Shop Drawings:
1. Include details of panel dimensions, profiles, edge conditions, joints, corners, anchorages, attachment assembly, trim, flashings, closures, and accessories; and special details.
2. Accessories: Include details of the flashing, trim, and anchorage, at a scale of not less than 1-1/2 inches per 12 inches
D. Samples for Verification: For each type of exposed finish required, prepared on Samples of size indicated below.
1. Composite Panels: 12 inches long by actual panel width. Include fasteners, closures, and other composite panel accessories. Submit custom color samples in paint manufacturer's standard size.

1.4 INFORMATIONAL SUBMITTALS
A. Qualification Data: For Installer.
B. Product Test Reports: For each product, tests performed by a qualified testing agency.
1. Composite Manufacturer's Material Test Reports: Certified test reports showing compliance with specific performance or third-party listing documenting compliance to comparable code sections IBC 1404.16.1 and IBC 1703.5.
2. Composite Panel System Fabricator's Certified System Tests Reports: Certified system test reports showing system compliance with specific performance or third-party listing documenting compliance code section. Base performance requirements on composite panel system type provided.
a. DBVR System: Tested to AAMA 509.
C. Field quality-control reports.
D. Sample Warranties: For special warranties.

1.5 CLOSEOUT SUBMITTALS
A. Maintenance Data: For composite panels to include in maintenance manuals.

1.6 QUALITY ASSURANCE
A. Installer Qualifications: An entity that employs installers and supervisors who are trained and approved by composite panel fabricator.
B. Deliver components, composite panels, and other manufactured items so as not to be damaged or deformed. Package composite panels for protection during transportation and handling.
C. Unload, store, handle, and erect composite panels in a manner to prevent bending, cracking, warping, twisting, and surface damage.
D. Stack composite panels on platforms or pallets no more than two pallets high, covered with suitable weathertight and ventilated covering.
E. Store composite panels to ensure dryness, with positive slope for drainage of water. Do not store composite panels in contact with other materials that might cause staining, denting, or other surface damage. Ensure panels are fully dry before installation.

1.7 FIELD CONDITIONS
A. Weather Limitations: Proceed with installation only when existing and forecasted weather conditions permit assembly of composite panels to be performed in accordance with manufacturers' written instructions and warranty requirements.

1.8 COORDINATION
A. Coordinate composite panel installation with rain drainage work, flashing, trim, construction of soffits, and other adjoining work to provide a leakproof, secure, and noncorrosive installation.

1.9 WARRANTY
A. Warranty on Panel Material: Manufacturer agrees to replace fiber cement that fails within specified warranty period.
1. Warranty Period: [**15**] [**20**] years from date of Substantial Completion.
B. Special Warranty on Panel Finishes: Manufacturer agrees to repair finish or replace composite panels that show evidence of deterioration of factory-applied finishes within specified warranty period.
1. Finish Warranty Period: 15 years from date of Substantial Completion.

PART 2 - PRODUCTS

2.1 PERFORMANCE REQUIREMENTS
B. Physical Performance: Provide composite panel system in accordance with ASTM C1186.
1. Wet Flexural Strength: Result: 1418 psi (9777 kPa), Lower Limit: 1015 psi (6998 kPa).
2. Water Tightness: No water droplets observed on any specimen.
3. Freeze-Thaw: No damage or defects observed.
4. Warm Water: No evidence of cracking, delamination, swelling, or other defects observed.
5. Heat-Rain: No crazing, cracking, or other deleterious effects, or surface or joint changes observed in any specimen.
C. Structural Performance: Provide composite panel systems capable of withstanding the effects of the following loads, based on testing in accordance with ASTM E330/E330M:
1. Design Wind Loads: Minimum [**58 psf (2.78 kPa)**]
3. Deflection Limits: For wind loads, panel deflection no greater than L/120 of the span.
D. Thermal Expansion: Maximum 0.00000318 deg F to minus 1 (0.0000005724 deg C to minus 1) when tested in accordance with ASTM E228.
E. Air Leakage: 1.53 cfm/sq. ft. (7.78 L/s/sq. m) or less in accordance with AAMA5094.
1. Test-Pressure Difference: [**2.86 lbf/sq. ft. (137 Pa)**] [**6.24 lbf/sq. ft. (300 Pa)**].
F. Surface-Burning Characteristics: Provide composite panels that meet the following values when tested in accordance with ASTM E84:
1. Flame-Spread Index: Zero.
2. Smoke-Developed Index: 5.
G. Fire Resistance: Composite panel wall assembly passes ASTM E119.
H. Ignition Resistance: Composite panel passes NFPA 268.

2.2 COMPOSITE WALL PANELS
A. Composite Wall Panel Systems: Provide factory-formed and -assembled, composite wall panels fabricated from a pressed, stamped, and autoclaved mix of portland cement, fly ash, silica, recycled rejects, and wood fiber bundles; formed into profile for installation method indicated. Include attachment assembly components and accessories required for weathertight system.
1. Basis-of-Design Product: Subject to compliance with requirements, provide Nichiha Architectural Wall Panels; Architectural Wall Panels or an equal comparable product.

B. Textured, Wood Plank Composite Wall Panels
1. Panel Dimensions: [**17-7/8 by 71-9/16 inches (455 by 1818 mm)**] [**17_7/8 by 119_5/16 inches (455 by 3030 mm)**] [**As indicated on Drawings**].
2. Panel Thickness: [**5/8 inch (16 mm)**] [**As indicated on Drawings**].
3. Panel: Factory sealed on all six sides.
4. Profiles: **as indicated on Drawings**
5. Color: **as indicated on Drawings**
6. Accessory Components: Manufactured corners [**with 3-1/2-inch (89-mm) returns**] [**as indicated on Drawings**].
C. Lightly Textured, Matte Composite Wall Panels <**Insert drawing designation**>:
1. Panel Dimensions: [**17-7/8 by 71-9/16 inches (455 by 1818 mm)**] [**As indicated on Drawings**].
2. Panel Thickness: [**5/8 inch (16 mm)**] [**As indicated on Drawings**].
3. Panel: Factory sealed on all six sides.
4. Profiles: None.
5. Color: **As indicated on Drawings**.
6. Accessory Components: Manufactured corners [**with 3.5-inch (89-mm) returns**] [**as indicated on Drawings**].
D. Concrete-Textured, Matte Composite Wall Panels.
1. Panel Dimensions: **As indicated on Drawings**.
2. Panel Thickness: **As indicated on Drawings**.
3. Panel: Factory sealed on all six sides.
4. Profiles: None.
5. Color: Standard.
6. Accessory Components: Manufactured corners [**with 3-1/2-inch (89-mm) returns**] [**as indicated on Drawings**].

2.3 MISCELLANEOUS MATERIALS
A. Miscellaneous Metal Subframing and Furring: ASTM C645, cold-formed, metallic-coated steel sheet with ASTM A653/A653M, G90 (Z275) hot-dip galvanized coating designation or ASTM A792/A792M, Class AZ50 (Class AZM150) aluminum-zinc-alloy coating designation unless otherwise indicated. Provide Fabricator's standard sections as required for support and alignment of composite panel system.
B. Panel Accessories: Provide components required for a complete, weathertight panel system including trim, copings, fascias, mullions, sills, corner units, clips, flashings, sealants, gaskets, fillers, closure strips, and similar items. Match material and finish of composite panels unless otherwise indicated.
C. Flashing and Trim: Provide [**anodized**] [**galvanized**] [**or**] [**PVC-coated**] aluminum flashing and trim as required to seal against weather and to provide finished appearance. Locations include, but are not limited to, bases, drips, sills, jambs, corners, endwalls, framed openings, rakes, fasciae, parapet caps, soffits, reveals, and fillers.
2. Aluminum Trim: Formed with 0.040-inch (1.00-mm-) thick, coil-coated aluminum sheet facings.
3. Color: [**As indicated by manufacturer's designations**] [**As selected by Architect from manufacturer's full range**] [**As indicated on drawing schedule**].
D. Panel Fasteners: Provide corrosion-resistant fasteners as required for construction method used.
E. Panel Sealants: ASTM C920, Class 35; elastomeric polyurethane or silicone sealant; of type, grade, class, and use classifications required to seal joints in composite panels and remain weathertight; and as recommended in writing by composite panel manufacturer.

Composite Wall Panels (Continued)

PART 3 - EXECUTION

3.1 EXAMINATION
A. Examine substrates, areas, and conditions, with Installer present, for compliance with requirements for installation tolerances, composite panel supports, and other conditions affecting performance of the Work.
1. Examine wall sheathing to verify that sheathing joints are supported by framing or blocking and that installation is within flatness tolerances required by composite panel manufacturer.
a. Verify that air- or water-resistive barriers have been installed over sheathing or backing substrate to prevent air infiltration or water penetration.
B. Examine roughing-in for components and assemblies penetrating composite panels to verify actual locations of penetrations relative to seam locations of composite panels before installation.
C. Proceed with installation only after unsatisfactory conditions have been corrected.

3.2 PREPARATION
A. Miscellaneous Supports: Install subframing, furring, and other miscellaneous panel support members and anchorages in accordance with composite panel manufacturer's written instructions.

3.3 COMPOSITE PANEL INSTALLATION
A. General: Install composite panels in accordance with Fabricator's written instructions in orientation, sizes, and locations indicated on Drawings. Install panels perpendicular to supports unless otherwise indicated. Anchor composite panels and other components of the Work securely in place, with provisions for thermal and structural movement.
1. Shim or otherwise plumb substrates receiving composite panels.
2. Flash or seal composite panels at perimeter of all openings. Fasten flashing with manufacturer-approved fasteners. Do not begin installation until air- or water-resistive barriers and flashings that will be concealed by composite panels are installed.
3. Install screw fasteners in predrilled holes.
4. Locate and space fastenings in uniform vertical and horizontal alignment.
5. Install flashing and trim as composite panel work proceeds.
6. Provide weathertight escutcheons for pipe- and conduit-penetrating panels.
B. Fasteners:
1. Composite Panels: Use hot-dip galvanized, ceramic-coated, or stainless steel fasteners for surfaces exposed to the exterior; use galvanized-steel fasteners for surfaces exposed to the interior.
C. Attachment Assembly, General: Install attachment assembly required to support composite wall panels and to provide a complete weathertight wall system, including subgirts, perimeter extrusions, tracks, drainage channels, panel clips, and anchor channels.
1. Include attachment to supports, panel-to-panel joinery, panel-to-dissimilar-material joinery, and panel-system joint seals.
D. Panel Installation: Attach composite wall panels to supports at locations, at spacings, and with fasteners recommended in writing by Fabricator to achieve performance requirements specified.
1. DBVR Rainscreen System: Install using Fabricator's standard assembly with horizontal channel that provides support and secondary drainage assembly, draining at base of wall. Attach composite wall panels by placing panel clips to supports at locations, at spacings, and with fasteners recommended in writing by Fabricator.
a. Track-Support Installation: Install support assembly at locations, at spacings, and with fasteners recommended in writing by manufacturer. Use Fabricator's standard horizontal [**tracks**] [**drain channels**] that provide support and secondary drainage assembly.
b. Panel Installation:
1) Attach composite wall panels by interlocking panel edges with Fabricator's standard clips.
c. Joint Sealing: Seal all joints in accordance with AAMA 509. Do not apply sealants to joints unless otherwise indicated.
E. Accessory Installation: Install accessories with positive anchorage to building and weathertight mounting, and provide for thermal expansion. Coordinate installation with flashings and other components.
1. Install components required for a complete composite panel assembly including trim, copings, corners, seam covers, flashings, sealants, gaskets, fillers, closure strips, and similar items. Provide types indicated by composite panel Fabricator; or, if not indicated, provide types recommended in writing by composite system Fabricator.
F. Flashing and Trim: Comply with performance requirements, manufacturer's written installation instructions, or SMACNA's "Architectural Sheet Metal Manual." Provide concealed fasteners where possible, and set units true to line and level as indicated. Install work with laps, joints, and seams that are permanently watertight.
1. Install exposed flashing and trim that is without buckling and tool marks and that is true to line and levels indicated, with exposed edges folded back to form hems. Install sheet metal flashing and trim to fit substrates and to result in waterproof performance.
2. Expansion Provisions: Provide for thermal expansion of exposed flashing and trim. Space movement joints at a maximum of 10 ft. (3 m) with no joints allowed within 24 inches (605 mm) of corner or intersection. Where lapped expansion provisions cannot be used or would not be sufficiently waterproof, form expansion joints of intermeshing hooked flanges, not less than 1 inch (25 mm) deep, filled with mastic sealant (concealed within joints).

3.4 ERECTION TOLERANCES
A. Site Verifications of Conditions:
1. Verify that conditions of substrate previously installed under other Sections are acceptable for composite system installation. Provide documentation indicating detrimental conditions to composite system performance.
2. Once conditions are verified, composite system installation tolerances are as follows:
a. Shim and align composite wall panel units within installed tolerance of 1/4 inch in 20 ft. (6 mm in 6 m), non-accumulative, on level, plumb, and location lines as indicated, and within 1/8-inch (3-mm) offset of adjoining faces and of alignment of matching profiles.

3.5 FIELD QUALITY CONTROL
A. Testing Agency: **Engage** a qualified testing agency to perform tests and inspections.
B. Fabricator's Field Service: Engage a factory-authorized service representative to test and inspect completed composite wall panel installation, including accessories.
D. Composite wall panels will be considered defective if they do not pass test and inspections.
E. Additional tests and inspections, at Contractor's expense, are performed to determine compliance of replaced or additional work with specified requirements.
F. Prepare test and inspection reports.

3.6 CLEANING AND PROTECTION
A. Remove temporary protective coverings, if any, as composite panels are installed, unless otherwise indicated in manufacturer's written installation instructions. On completion of composite panel installation, clean finished surfaces as recommended by composite panel manufacturer. Maintain in a clean condition during construction.
B. After composite panel installation, clear weep holes and drainage channels of obstructions, dirt, and sealant.
C. Replace composite panels that have been damaged or have deteriorated beyond successful repair by finish touchup or similar minor repair procedures.

END OF SECTION 074243

RELEASE FOR CONSTRUCTION
AS NOTED ON PLANS REVIEW
DEPARTMENT OF COMMUNITY SERVICES
LEE'S SUMMIT, MISSOURI
BY
06/17/2020

CASCO
12 Sumten Drive, Suite 100, St. Louis, MO 63143 T: 314.576.1188

MIDLAND
GENERAL CONTRACTORS INCORPORATED

Starbucks & Medical Office
155 S.W. MO-150 HWY
LEE'S SUMMIT, MO 64802

No.	Description	Date
	Owner Review	05/12/20

CONSTR. DOC. & REVISIONS

CASCO DIVERSIFIED CORPORATION
ARCHITECTURAL
CERTIFICATE OF AUTHORITY
#000329 12/31/21

STATE OF MISSOURI
KEYMA L. BULLOCK
NUMBER
A-2004011669
ARCHITECT

PROFESSIONAL OF RECORD
BULLOCK, KEYMA L.
License NO. 2004011669
Expiration Date 12/31/20

Drawn By/Checked By:	RMT/MSD
Project Number	320488
Permit Date	06-17-20

SPECIFICATIONS

G012

Thermal and Moisture Protection (Continued)

SECTION 07842 - FIRE-RESISTIVE JOINT SYSTEMS
1.1 SUMMARY
A. Fire-resistive joint systems for the following:
1. Floor-to-wall joints.
2. Head-of-wall joints.
3. Wall-to-wall joints.
1.2 PERFORMANCE REQUIREMENTS
A. Fire-Resistance Ratings of Joint Systems in and between Fire-Resistance-Rated Constructions: Equaling or exceeding the fire-resistance ratings of construction that they join, [and with movement capabilities indicated]as determined by UL 2079.
1.3 SUBMITTALS
A. Product Data: For each type of product indicated.
1.4 QUALITY ASSURANCE
A. Fire-Test-Response Characteristics: Tested by [UL] [OPL] <Insert name of qualified testing and inspecting agency>.
1.5 MATERIALS
A. Products: Subject to compliance with requirements, provide one of the fire-resistive joint systems indicated for each application in the Fire-Resistive Joint System Schedule.
B. Accessories: Forming materials and other components needed to install fill materials.
C. Designation System for Joints in or between Fire-Resistance-Rated Constructions: Alphanumeric systems listed in UL's "Fire Resistance Directory" under Product Category XHBN.
D. Floor-to-Wall Fire-Resistive Joint Systems:
1. UL-Classified Systems: FW-S-0000-0999.
2. Assembly Rating: As Indicated.
3. Nominal Joint Width: As indicated.
E. Head-of-Wall Fire-Resistive Joint Systems:
1. UL-Classified Systems: HW-D-0000-0999.
2. Assembly Rating: As indicated.
3. Nominal Joint Width: As indicated.
4. Movement Capabilities: Class III - compression or extension.
F. Wall-to-Wall Fire-Resistive Joint Systems:
1. UL-Classified Systems: WW-S-0000-0999.
2. Assembly Rating: As indicated.
3. Nominal Joint Width: As indicated.
END OF SECTION 07842

SECTION 07920 - JOINT SEALANTS
1.1 QUALITY ASSURANCE
A. Preconstruction compatibility and adhesion testing.
B. Product testing.
C. Preconstruction field-adhesion testing.
D. Mockups.
1.2 MATERIALS
A. VOC Content of Interior Sealants: Provide interior sealants and sealant primers that comply with the following limits for VOC content when calculated according to 40 CFR 59, Subpart D (EPA Method 24):
1. Sealants: 250 g/L.
2. Sealant Primers for Nonporous Substrates: 250 g/L.
3. Sealant Primers for Porous Substrates: 775 g/L.
B. Elastomeric Joint Sealants: Liquid applied, chemically curing; ASTM C 920.
1. Suitability for Contact with Food: Where elastomeric sealants are indicated for joints that will come in repeated contact with food, provide products that comply with 21 CFR 177.2600.
2. Multicomponent Nonsag Neutral-Curing Silicone Sealant ES-1.
3. Single-Component Mildew-Resistant Neutral-Curing Silicone Sealant ES-2.
4. Single-Component Mildew-Resistant Acid-Curing Silicone Sealant ES-3.
5. Single-Component Mildew-Resistant Acid-Curing RTV Silicone Sealant ES-4.
6. Multicomponent Nonsag Polyurea Sealant ES-5.
7. Multicomponent Nonsag Polyurea Filler ES-6.
C. Latex Sealant LS-1: Comply with ASTM C 834, Type P, Grade NF.
D. Joint-Sealant Backing:
1.3 JOINT-SEALANT SCHEDULE
A. Joint-Sealant Application JS-1: Exterior horizontal nontraffic and traffic isolation and contraction joints in cast-in-place concrete slabs.
1. Joint Sealant: ES-5.
B. Joint-Sealant Application JS-2: Exterior perimeter joints between wall and frames of doors and windows.
1. Joint Sealant: ES-1.
C. Joint-Sealant Application JS-3: Exterior control and expansion joints in horizontal traffic surfaces of brick pavers, ceramic tile, stone paving units, concrete tile.
1. Joint Sealant: Multicomponent pourable polysulfide sealant.
2. Joint-Sealant Color: As selected by Architect from manufacturer's full range.
D. Joint-Sealant Application JS-4: Interior perimeter joints of exterior openings.
1. Joint Sealant: ES-3.
E. Joint-Sealant Application JS-5: Interior ceramic tile expansion, control, contraction, and isolation joints in horizontal traffic surfaces.
1. Joint Sealant: ES-3.
2. Joint-Sealant Color: As noted.
F. Joint-Sealant Application JS-6: Interior joints between plumbing fixtures and adjoining walls, floors, and counters.
1. Joint Sealant: ES-3.
2. Joint-Sealant Color: White.
G. Joint-Sealant Application JS-7: Vertical joints on exposed surfaces of interior partitions.
1. Joint Sealant: ES-3.
H. Joint-Sealant Application JS-8: Perimeter joints between interior wall surfaces and frames of interior doors, windows.
1. Joint Sealant: ES-3.
I. Joint-Sealant Application JS-9: HVAC joints.
1. Joint Sealant: ES-2.
2. Joint-Sealant Color: Aluminum.
J. Joint-Sealant Application JS-10: Non-porous material to non-porous material.
1. Joint Sealant: ES-4.
2. Joint-Sealant Color: Clear.
END OF SECTION 07920

Doors and Windows

SECTION 08110 - STEEL DOORS AND FRAMES
1.1 SUMMARY
A. Standard hollow metal doors and frames.
1.2 SUBMITTALS
A. Product Data: For each type of product indicated. Include construction details, material descriptions, core descriptions, fire-resistance rating, temperature-rise ratings, and finishes.
B. Shop Drawings: Include the following:
1. Elevations of each door design.
2. Details of doors, including vertical and horizontal edge details and metal thicknesses.
3. Frame details for each frame type, including dimensioned profiles and metal thicknesses.
4. Locations of reinforcement and preparations for hardware.
5. Details of each different wall opening condition.
6. Details of anchorages, joints, field splices, and connections.
7. Details of accessories.
8. Details of moldings, removable stops, and glazing.
9. Details of conduit and preparations for power, signal, and control systems.
1.3 QUALITY ASSURANCE
A. Standard Hollow Metal Quality Standard: ANSI/SDI A250.8.
B. Fire-Rated Doors and Frames: [Positive-pressure] [Neutral-pressure] testing.
1.4 PRODUCTS
A. Standard Hollow Metal Doors:
1. Design: Flush panel.
2. Thermal-Rated Doors: Exterior where indicated.
3. Exterior Doors: Face sheets fabricated from metallic-coated level 2 bullet resistant steel sheet.
a. Level 2 and Physical Performance Level B (Heavy Duty).
B. Standard Hollow Metal Frames:
1. Exterior Frames: Metallic-coated steel sheet; full profile welded.
a. Frames for Level 2 Steel Doors: 0.053-inch-(1.3-mm-) thick steel sheet.
2. Interior Frames: Cold-rolled steel sheet; knocked down.
a. Frames for Level 1 Steel Doors: 0.042-inch-(1.0-mm-) thick steel sheet.
b. Frames for Wood Doors: [0.042-inch-(1.0-mm-)] thick steel sheet.
C. Hollow Metal Panels: Same materials, construction, and finish as adjoining hollow metal work.
D. Accessories:
1. Moldings and stops for glazed lites.
2. Terminated (hospital) stops.
3. Louvers: [Sightproof] [Lightproof] [Fire-rated automatic], steel.
E. Finishes: [Factory priming for field painting] [Factory-applied paint].
1.5 INSTALLATION
A. Metal-Stud Partitions: Frames filled with insulation.
B. Concrete and Masonry Walls: Frames filled with grout.
END OF SECTION 08110

Doors and Windows (Continued)

SECTION 08410 - ALUMINUM-FRAMED ENTRANCES AND STOREFRONTS
1.1 SUMMARY
A. Exterior and interior storefront framing.
B. Exterior and interior manual-swing entrance doors.
1.2 PERFORMANCE REQUIREMENTS
A. Delegated Design: Contractor to design aluminum-framed systems.
B. Structural Performance:
1. Wind Loads: As indicated on Drawings.
2. Seismic Loads: As indicated on Drawings.
C. Deflection of Framing Members:
1. Deflection Normal to Wall Plane: Limited to L/175.
2. Deflection Parallel to Glazing Plane: Limited to L/360 or 1/8 inch(3.2 mm), whichever is smaller.
D. Windborne-Debris-Impact-Resistance Performance: <Insert requirement>.
1.3 SUBMITTALS
A. Product Data: Include construction details, material descriptions, dimensions of individual components and profiles, and finishes for each type of product indicated.
B. Shop Drawings: For aluminum-framed systems. Include plans, elevations, sections, details, and attachments to other work.
1. Include details of provisions for system expansion and contraction and for draining moisture occurring within the system to the exterior.
2. For entrances, include hardware schedule and indicate operating hardware types, functions, quantities, and locations.
C. Samples: Submit three samples, minimum 2"x4", of aluminum finished with system and color proposed for the finished work.
D. Warranties: Special warranties specified in this Section.
1.4 QUALITY ASSURANCE
A. Quality-control program for structural-sealant-glazed system.
B. Preconstruction sealant testing.
1.5 WARRANTY
A. Materials and Workmanship: Three years.
B. Finish: 20 years.
1.6 MAINTENANCE SERVICE
A. Entrance Door Hardware: [Six] <Insert number> months.
1.7 MANUFACTURERS
A. Basis-of-Design Product: The design for aluminum-framed systems is based on Kawneer Trifab VG 451 front set for exterior applications, Trifab VG 450 for interior applications, and 3500 Series for swing doors. MATERIALS
B. Aluminum: Alloy and temper recommended by manufacturer.
C. Steel reinforcement.
1.8 FRAMING SYSTEMS
A. Brackets and reinforcements.
B. Fasteners and accessories.
C. Concrete and masonry inserts.
D. Concealed Flashing: Manufacturer's standard corrosion-resistant, nonstaining, nonbleeding flashing.
E. Framing system gaskets and sealants.
1.9 GLAZING SYSTEMS
A. Glazing: As specified in Division 8 Section "Glazing."
B. Glazing gaskets.
C. Spacers and setting blocks.
D. Bond-breaker tape.
E. Glazing Sealants:
1. Structural sealant.
2. Weatherseal sealant.
1.10 ENTRANCE DOOR SYSTEMS
A. Entrance Doors:
1. Door Construction: 1-3/4-inch(44.5-mm) overall thickness.
2. Door Design: Medium stile.
3. Glazing stops and gaskets.
B. Entrance Door Hardware: Division 8 Section "Door Hardware."
1.11 ALUMINUM FINISHES
A. Aluminum Finishes: High-performance organic (two coats).
1.12 FIELD QUALITY CONTROL
A. Testing: By Contractor-engaged agency.
END OF SECTION 08410

SECTION 08710 - DOOR HARDWARE
1.1 SUMMARY
A. Commercial door hardware for swinging doors.
B. Other doors to the extent indicated.
C. Cylinders for doors specified in other Sections.
1.2 SUBMITTALS
A. Product Data: Include construction and installation details, material descriptions, dimensions of individual components and profiles, and finishes.
1.3 WARRANTY
A. Warranty Period: One year from date of Substantial Completion, except as follows:
1. Manual Closers: 25 years from date of invoice.
2. Cylindrical Locksets: Two years from date of invoice.
3. Exit Device: Five years from date of invoice.
1.4 MAINTENANCE SERVICE
A. Full-Maintenance Service: Six months.
1.5 PRODUCTS
A. Cylinders and Keying:
1. Construction Keying: Construction [master keys] [cores].
2. Keying System:
a. Grand master key.
b. Locks master keyed or grand master keyed to existing system.
c. All cylinders keyed alike.
d. Keys: Nickel silver.
1) Stamping: Permanently inscribe each key with a LockNet key control number, state code, and include the following notation:
a) Notation: "DO NOT DUPLICATE."
2) Quantity: In addition to one extra key blank for each lock, provide the following:
a) Cylinder Change Keys: Two.
b) Construction Keys: Four.
c) Master Keys: Four.
d) Grand Master Keys: two.
1.6 FIELD QUALITY CONTROL
A. Independent Architectural Hardware Consultant: [Owner] [Contractor] engaged to perform inspections.
B. Occupancy Adjustment: Three months.
END OF SECTION 08710

SECTION 08800 - GLAZING
1.1 SUMMARY
A. Glazing required for the following:
1. Windows.
2. Doors.
3. Storefront framing.
1.2 SUBMITTALS
A. Product Data: For each glass product and glazing material indicated.
B. Glazing Schedule: Use same designations indicated on Drawings for glazed openings in preparing a schedule listing glass types and thicknesses for each size opening and location.
C. Product Certificates: Signed by manufacturers of glass and glazing products certifying that products furnished comply with requirements.
1. For solar-control low-e-coated glass, provide documentation demonstrating that manufacturer of coated glass is certified by coating manufacturer.
D. Warranties: Special warranties specified in this Section.
1.3 QUALITY ASSURANCE
A. Preconstruction adhesion and compatibility testing.
1.4 WARRANTY
A. Deterioration of Coated Glass: Not less than 10 years.
B. Deterioration of Insulating Glass: Not less than 10 years.
1.5 MATERIALS
A. Glass Products:
1. Annealed Float Glass: Clear.
2. Heat-Treated Float Glass: Heat strengthened.
3. Coated Float Glass: Sputter coated.
4. Insulating Glass: Manufacturer's standard dual-seal units.
B. Fire-Resistive Glazing: [Monolithic ceramic glazing material] [Film-faced ceramic glazing material] [Laminated ceramic glazing material] [Specially tempered monolithic glass] [Laminated glass with intumescent interlayers] [Gel-filled, dual-glazed units].
C. Silicone Glazing Sealants: [Neutral] [Neutral or basic] [Acid] curing, Class [25] [50] [100/50], VOC less than 250 g/L.
D. Glazing Tapes: [Back-bedding-mastic] [Expanded-cellular] type.
E. Glazing Gaskets: [Dense compression] [Soft compression] [Lock strip].

Doors and Windows (Continued)

1.6 INSULATING-GLASS UNITS
A. Tempered Clear Insulating Glass with Low-E-Coating : Guardian / Sunguard / Super Neutral SN-68 / (Clear/Clear)
1. Provide where indicated on drawings as "IG-1. - Tempered Insulating Glass"
2. Overall Unit Thickness: 1 inch
3. Thickness of Each Glass Lite: 6.0 mm.
4. Outdoor Lite: ¼" Clear float glass, fully tempered
5. Interspace Content: Air
6. Indoor Lite: ¼" Clear float glass, fully tempered
7. Low-E Coating: Guardian SN 68 sputtered on second surface of outboard lite
8. Visible Light Transmittance: 68 percent minimum.
9. Winter Nighttime U-Factor: 0.29 maximum.
10. Summer Daytime U-Factor: 0.28 maximum.
11. Solar Heat Gain Coefficient: 0.38 maximum.
12. Provide safety glazing labeling.
END OF SECTION 08800

Finishes

SECTION 09900 - PAINTING
PART 1 - GENERAL
1. It is the intent of this section to set minimum standards for the surface preparation and application of paint materials interior and exterior.
2. In general it will be assumed that all building materials will be painted. Items specifically called out not to be painted and prefinished items will not be required to be painted unless otherwise noted.
3. Provide primers and undercoat paint produced by the same manufacturer as the finish coat.
4. Work required to be painted includes:
a. All wood.
b. All ferrous metals including galvanized and shop
c. Primed materials.
d. All drywall material except where not exposed to view.
e. All materials called out on the exterior color schedules.
f. All roof accessories, vents, flashings, etc.
g. All Portland Cement Stucco and accessories.
h. Beams, misc. metals, etc.
i. All hollow metal doors and frames.
j. All access panels, electrical boxes, piping, and any Mechanical or Electrical item exposed to view.
5. Work not included:
a. Glass, rubber, plastic, stainless steel, copper, prefinished aluminum, masonry veneer.
6. All exposed surfaces of access doors, electrical panels, grilles and related flush mounted equipment and items in general shall be painted the same color as surrounding walls or surfaces.
7. Paint shall not be applied over caulking or sealants unless specifically called out to be painted. Sealants and caulking shall be color coordinated with the finish colors surrounding it.
8. Primers and undercoats shall be tinted to match the final top coat. Each coat will be slightly darker than the proceeding coat on three coat work.
9. Woodwork, and wood products in contact with masonry or concrete shall be back primed before installation.
10. Any member or item or material visible behind a grille, louver, diffuser, etc. shall be painted a neutral black before final attachment of trim.
11. All exposed surfaces shall be inspected prior to any final painting for any defects or unacceptable substrata which cannot be corrected by the Contractor by procedures specified below. Once Painting Contractor commences painting the final coat, the responsibility of the final surface becomes his. It is the Painting Contractor's responsibility, through the General Contractor, to insure that the work of all previous Contractors is ready for painting and he will not proceed until all corrections are made to the satisfaction of the Painting Contractor.
12. Paint materials shall not be applied to the exterior when the temperature is 40 degrees and falling or when frost or precipitation in any form is forecast within the next 24 hour period. Apply in strict accordance with manufacturer's instructions if the above criteria are in conflict with these directions.
13. The surfaces to be painted shall be dust and contaminate free. The area shall be broom cleaned of all dust and debris. After painting operations begin with a given area, commercial vacuum cleaning shall be used.
14. This Contractor shall provide sufficient temporary lighting for the surface being painted. Sufficient light shall be 50- 60 foot-candles.
15. This Contractor shall provide adequate ventilation to remove from the newly painted area, or during painting operations, all released moisture and toxic and volatile solvents from the building. Where volatile toxic or otherwise harmful vapors are present, the Contractor shall protect the workmen and adjacent areas from such agents. Fire and explosion precautions will be the responsibility of this contractor and will be honored by all personnel on the project.

PART 2 - PRODUCTS
1. Material used must be exactly as specified for the various types of surfaces.
2. Use materials only as specified on manufacturer's direction label on container.
3. Materials such as linseed oil, shellac, turpentine, etc., must be pure, of highest quality and bear identifying label on container.
4. As required by Public Law 91-695, the Lead Base Poisoning Prevention Act and by Facilities Engineering and Construction Agency, paint containing more than .five (5) percent lead content shall not be used on surfaces accessible to children. Accessible surfaces include interior and exterior surfaces readily accessible to children up to seven (7) years of age, for all coats.
5. Proprietary names used herein refer to the Glidden Company products unless otherwise specified. Equivalent products of Porter, Behr, Benjamin More, Dunn and Edwards, or Sherwin-Williams Company will be acceptable.
6. Alternate colors to be coordinated with the Owner.
7. It shall be understood that the number of coats called for is a minimum, and sufficient product shall be applied to cover the material and to produce a smooth, dense film of constant quality and hue.
8. Exterior Finishes:
a. Metal unprimed -
Surface prep S-W 13.
One coat zinc-rich primer.
Two coats industrial enamel, alkyd gloss @ 2.0 DFT each coat.
b. Metal - galvanized -
Surface prep SSPC-SPI solevant clean
2 coats DTM acrylic gloss coating @ 2.5 DFT each coat.
Note - no alkyd material shall be used on galvanized surfaces.
c. Exterior Siding and Wood Trim:
Surface prep S-W 23, back prime all exterior wood.
One coat A-100 Oil primer @ 2.3DFT.
Two coats A-100 Acrylic satin @ 1.3 DFT each coat.
d. Concrete:
Surface prep S-W 22
One Coat Loxon masonry coating @ 3.3 DFT.
2 coats A-100 exterior latex satin @ 1.3 DFT each coat.

PART 3 - EXECUTION
9. Only skilled mechanics experienced in the field application of paint products shall be used.
10. Generally application shall be by brush, roller, or spray. The application method will depend on the products used and the coverage and final appearance obtained. Obtain approval of the Architect before spraying non-typical surfaces.
11. The Contractor shall schedule the application of paint to ensure adequate drying time is allowed between coats of paint. Not more than one coat shall be applied to one surface in one day.
12. The Contractor shall not only protect his work at all times, but shall also protect all adjacent work, surfaces and materials by an impervious covering or other method insure against contamination. Upon completion of the work, remove all paint product spills, splatters, overspray and similar contaminants from all other surfaces including, but not limited to glass, prefinished materials, flooring, and ceiling materials.
13. Remove and protect hardware, accessories, plates, fixtures, and similar items or provide ample masking and inplace removable protection to insure against contamination. Upon completion carefully replace all removed items and remove all masking and contaminates from surfaces.
14. All paint materials shall be applied with adequate illumination, evenly applied with adequate illumination, evenly applied and spread to produce a smooth surface without runs, sags, holidays, brush or roller marks, air bubbles, pin holes, or uneven coverage.
15. Where spray painting is specified or approved by the Architect, overspray shall be removed immediately after application.
16. Metal accessories shall be generally spray painted, including doors, frames, grilles, louvers, etc.
17. Where paint colors change in the same plane the base color shall be applied to the entire surface, then the remaining colors applied atop by masking or the base coat areas. In corners not in the same plane paint may be cut in by hand if the final juncture is neat and straight.
18. Surfaces shall be clean, dry, free of dust and grease, and free of any material that may directly or indirectly affect the adhesion, surface, color or hue of the final coats of paint.
a. Drywall shall be filled around all depressions, minor irregularities, etc. with an approved patching compound and sand to a feather edge, smooth level surface. Sanding shall not raise the grain or nap of the paper covering. Raised joints in drywall will not be acceptable. If a joint can throw a shadow, correct the condition.
12. All metal exposed on the roof shall be painted to adjacent surfaces.

Premanufactured Canopies and Awnings

SECTION 10530 - PRE-MANUFACTURED CANOPIES

Part 1: General

1.1 Description of Work
1. Work in this section includes furnishing and installation of extruded aluminum overhead hanger rod style canopies .
2. Related Items and Considerations
1. Flashing of various designs may be required. Generic flashing supplied by manufacturer. Specialty flashing to be supplied by installer.
2. Determine wall construction, make-up and thickness.
3. Ensure adequate wall condition to carry canopy loads where required.
4. Consider water drainage away from canopy where necessary.
5. Any necessary removal or relocation of existing structures, obstructions or materials.

1.2 Quality Assurance
1. Products meeting these specifications established standard of quality required by the manufacturer.

1.3 Field Measurement
1. Confirm dimensions prior to preparation of shop drawings when possible.
2. If requested, supply manufacturer s standard literature and specifications for canopies.
3. Submit shop drawings showing structural component locations/positions, material dimensions and details of construction and assembly.

1.4 Performance Requirements
1. Canopy must conform to local building codes.
2. PE Stamped calculations are required and must be signed and sealed by an engineer licensed within the state canopy is installed.

1.5 Deliver, Storage, Handling
1. Deliver and store all canopy components in protected areas.

Part 2: Products

2.1 Manufacturers
1. Design intent:
1.1. Mapes Canopies, Lincoln, Nebraska, Phone: 1-888-273-1132, Fax: 1-877-455-6572.
2. Alternate:
2.1. Lawrence Fabric and Metal Structures Inc., St. Louis, Missouri, Phone 1-800 527-3840, FAX: 1-636-861-0150.

2.2 Hanger Rod Supported
3. Materials
3.1. Decking.
1.1.1. Interlocking roll-form 2 1/2 W style pan (.032" aluminum). Refer to drawings for location.
1.1.2. Louvered blades (.110" extruded aluminum). Refer to drawings for location.
1.2. Intermediate framing members shall be extruded aluminum, alloy 6063-T6, in profile and thickness as provided by the manufacturer.
1.3. Hanger rods and attachment hardware shall be a standard finish.
1.4. Fascia shall be standard extruded 8" J style.
2. Fabrication
1.1. All connections shall be as recommended by the manufacturer.
1.2. Shading components shall be designed with interlocking extruded components of the design chosen.
1.3. Concealed drainage. Water shall drain from covered surfaces into intermediate trough and be directed to None.

2.3 Post Supported
2. Materials
2.1. Decking shall consist of 3" extruded flat soffit .078 decking.
2.2. Beams shall be 6"x10".
2.3. Posts shall be 6"x6".
2.4. Fascia shall be standard extruded 8" J style.
3. Fabrication
1.1. Support columns and gutter beams shall be designed such that the columns will be notched to create a "saddle" that will receive and secure the gutter beams.
1.2. Post and beams shall be mechanically assembled utilizing 3/16" fasteners with a minimum shear stress of 350 lb. Pre-welded or factory-welded connections are not acceptable.
1.3. Decking shall be designed with interlocking extruded aluminum members with mechanical fasteners field applied to provide structural integrity for the completed assembly.
1.4. Concealed drainage. Water shall drain from covered surfaces into intermediate trough and be directed to Standard Post Drain.

2.4 Finishes
1. Finish type shall be 2-Coat Kynar Finish.

Part 3: Execution

3.1 Inspection
1. Confirm that surrounding area is ready for the canopy installation.
2. Installer shall confirm dimensions and elevations to be as shown on drawings provided by the manufacturer.
3. Erection shall be performed by an approved installer and scheduled after all concrete, masonry and roofing in the area is completed

3.2 Installation
1. Installation shall be in strict accordance with manufacturer's shop drawings. Particular attention should be given to protecting the finish during handling and erection.

3.3 After installation, entire system shall be left in a clean condition.

RELEASE FOR CONSTRUCTION
AS NOTED ON PLANS REVIEW
DEPARTMENT OF DEVELOPMENT SERVICES
LEE'S SUMMIT, MISSOURI
06/17/2020

CASCO
12 Summen Drive, Suite 100, St. Louis, MO 63143 T: 314.567.4500

MIDLAND GENERAL CONTRACTORS INCORPORATED

Starbucks & Medical Office
155 S.W. MO-150 HWY
LEE'S SUMMIT, MO 64802

No.	Description	Date
	Owner Review	05/12/20

CONSTR. DOC. & REVISIONS

CASCO DIVERSIFIED CORPORATION
ARCHITECTURAL
CERTIFICATE OF AUTHORITY
#000329 12/31/21

STATE OF MISSOURI
KEYMA L. BULLOCK
NUMBER A-2004011669
ARCHITECT

PROFESSIONAL OF RECORD
BULLOCK, KEYMA L.
License NO. 2004011669
Expiration Date 12/31/20

Drawn By/Checked By:	RMT/MSD
Project Number	320488
Permit Date	06-17-20

SPECIFICATIONS

G013

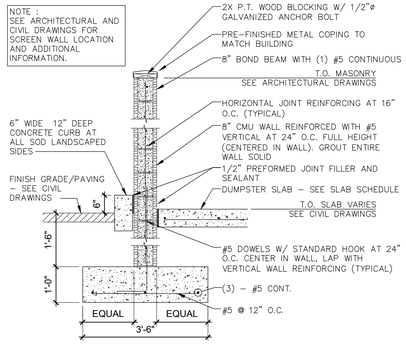

3 A101 DETAIL
SCALE: 1/2" = 1'-0"

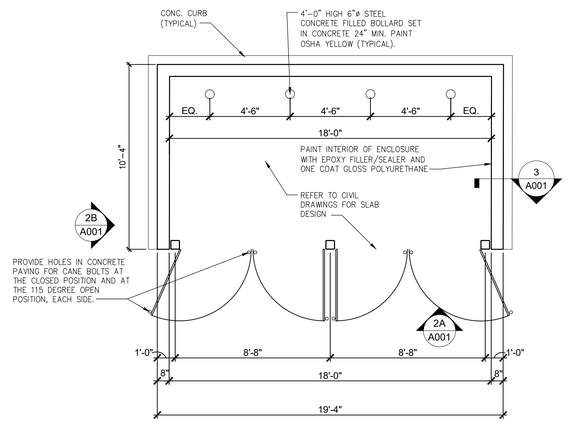

2 A001 TRASH ENCLOSURE PLAN
SCALE: 1/4" = 1'-0"

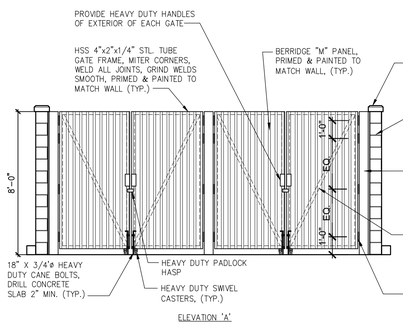

2A A001 ELEVATION
SCALE: 1/4" = 1'-0"

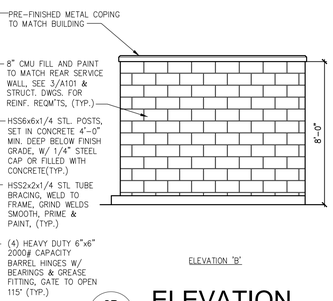

2B A001 ELEVATION
SCALE: 1/4" = 1'-0"

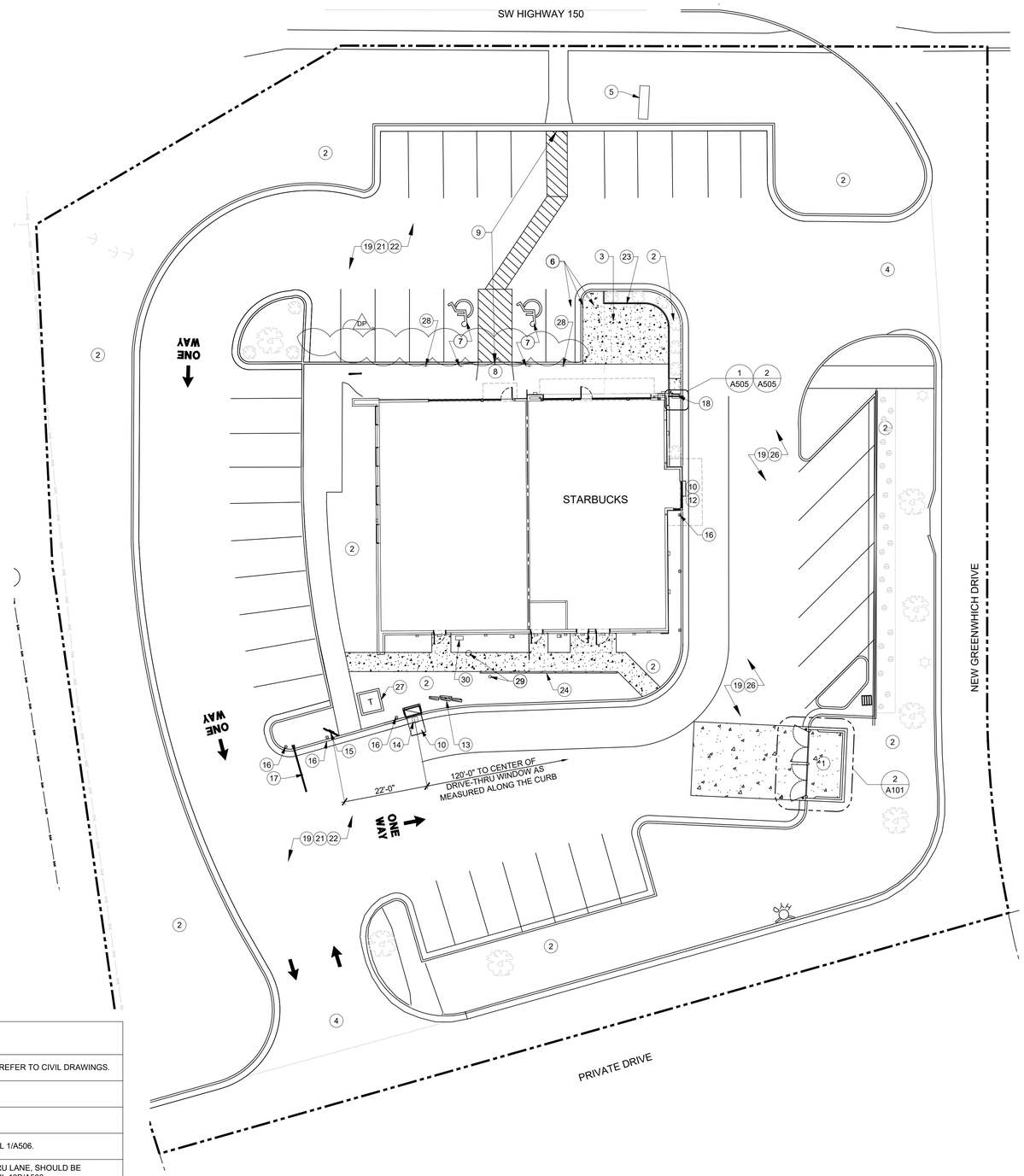

NORTH

1 A001 SITE PLAN
SCALE: 1/16" = 1'-0"

ARCHITECTURAL SITE PLAN KEYNOTES

1	TRASH ENCLOSURE TO ACCOMMODATE MIN. 2 DUMPSTERS (ONE FOR RECYCLING) W/ HOSE BIB.	11	NOT USED	21	PARKING, DRIVE-THRU AND DIRECTIONAL STRIPING. REFER TO CIVIL DRAWINGS.
2	LANDSCAPING TO BE LOW PROFILE, NO HIDING PLACES, 30" MAXIMUM HEIGHT; RE: LANDSCAPE PLANS.	12	DRIVE THRU WINDOW	22	SITE LIGHTING. REFER TO ELECTRICAL DRAWINGS.
3	PATIO.	13	DRIVE THRU MENU BOARD, RE: DETAIL 9/A504A.	23	DECORATIVE METAL RAILING
4	SITE ACCESS.	14	DRIVE THRU ORDER SCREEN AND CANOPY, RE: DETAIL9/A504A & 5/A505	24	TALL SCREEN TO COVER UTILITY METERS, RE: DETAIL 1/A506.
5	UPDATED EXISTING MONUMENT SIGN, BY OWNER.	15	PREVIEW MENU BOARD, RE: DETAIL 2 & 8/A504A.	25	PROTECTIVE BOLLARDS AND FOOTING AT DRIVE-THRU LANE, SHOULD BE ILLUMINATED WHEN IN LANDSCAPE STRIP. SEE DETAIL 13B/A506.
6	BIKE RACK (DERO HOOP RACK BY DERO BIKE RACKS) RE:14/A506	16	NON-ILLUMINATED PROTECTIVE BOLLARD AND FOOTING, SEE DETAIL 13A/A506.	26	EXISTING GAS SERVICE
7	HANDICAPPED PARKING AND SIGN	17	CLEARANCE BAR, SEE DETAIL 6/A504.A	27	TRANSFORMER, BY UTILITY CO. REFER TO CIVIL DRAWINGS.
8	ACCESSIBLE CURB RAMP	18	DIRECTIONAL SIGNAGE. RE: 1,2 & 3/A505	28	MOBIL ORDER PARKING SIGN
9	ACCESSIBLE PATH OF TRAVEL. REFER TO CIVIL DRAWINGS	19	REFER TO CIVIL DRAWINGS FOR PAVING .	29	EXISTING WATER METER AND CLEAN OUT
10	DRIVE-THRU EQUIPMENT INCLUDING VEHICLE DETECTION LOOP, WIRELESS COMMUNICATION, AND MONITORS.	20	NOT USED DP	30	EXISTING IRRIGATION VAULT

RELEASE FOR CONSTRUCTION
AS NOTED ON PLANS REVIEW
DEVELOPMENT SERVICES
LEE'S SUMMIT, MISSOURI
06/17/2020

CASCO
12 Summit Drive, Suite 100, St. Louis, MO 63143 T: 314.567.4500

MIDLAND
GENERAL CONTRACTORS INCORPORATED

Starbucks & Medical Office

155 S.W. MO-150 HWY
LEE'S SUMMIT, MO 64802

CONSTR. DOC. & REVISIONS

No.	Description	Date
	Owner Review	05/12/20
	Final Development Plan	05/27/20
	Owner Review 2	06/04/20
DP	DEVELOPMENT PLAN RESPONSE	06/17/20

CASCO DIVERSIFIED CORPORATION
ARCHITECTURAL
CERTIFICATE OF AUTHORITY
#000329 12/31/21

STATE OF MISSOURI
KEYMA L. BULLOCK
NUMBER
A-2004011669
ARCHITECT

PROFESSIONAL OF RECORD
BULLOCK, KEYMA L.
License NO. 2004011669
Expiration Date 12/31/20

Drawn By/Checked By: RMT/MSD
Project Number 320488

Permit Date 06-17-20

ARCHITECTURAL SITE PLAN

A001

DEMOLITION PLAN KEYED NOTES

1. EXISTING DRIVE-THRU CONSTRUCTION TO BE REMOVED IN ITS ENTIRETY. STRUCTURAL STEEL COLUMNS WITHIN THE BUILDING WALL TO REMAIN. DRIVE THRU EQUIPMENT, CURBS AND BOLLARDS TO BE REMOVED IN THEIR ENTIRETY. COORDINATE WITH CIVIL.
2. EXISTING WALL MOUNTED DRIVE-THRU EQUIPMENT, WINDOW SYSTEM AND STUD WALL TO BE REMOVED IN THEIR ENTIRETY TO THE BOTTOM OF THE STEEL ROOF BEAMS AS REQUIRED FOR NEW CONSTRUCTION. REMOVE ALCOVE FOR VACUUM TUBE AND INFILL TO MATCH ADJACENT CONSTRUCTION. REFER TO A101 FOR ADDITIONAL INFORMATION.
3. EXISTING BRICK VENEER TO BE REMOVED IN ITS ENTIRETY FROM THE ENTIRE EAST AND NORTH WALLS U.N.O.. EXISTING EXTERIOR SHEATHING TO REMAIN. REPLACE ANY EXISTING EXTERIOR SHEATHING AND INSULATION THAT IS UNSOUND OR IN DISREPAIR. INFILL VOIDS TO MATCH ADJACENT EXISTING CONSTRUCTION. PREPARE WALL TO RECEIVE NEW FLUID APPLIED AIR AND MOISTURE BARRIER SYSTEM
4. SAW CUT EXISTING BRICK VENEER TO PROVIDE A CLEAN JOINT AT NEW EXTERIOR FINISH MATERIAL.
5. EXISTING BRICK VENEER STUD WALL AND WINDOWS TO REMAIN. G.C. TO PROTECT DURING CONSTRUCTION. TUCKPOINT AS REQUIRED. REFER TO A101 FOR ADDITIONAL INFORMATION.
6. EXISTING STOREFRONT AND VESTIBULE CONSTRUCTION TO BE REMOVED IN ITS ENTIRETY TO THE BOTTOM OF THE STEEL ROOF BEAMS AS REQUIRED FOR NEW CONSTRUCTION. STRUCTURAL STEEL COLUMNS TO REMAIN.
7. EXISTING CANOPY TO BE REMOVED IN ITS ENTIRETY.
8. EXISTING H.M. DOOR AND FRAME TO BE REMOVED IN ITS ENTIRETY.
9. SAW CUT EXISTING BRICK VENEER AS REQUIRED TO PROVIDE OPENING FOR NEW H.M. DOOR. PROVIDE SHORING AS REQUIRED UNTIL NEW LINTEL IS INSTALLED.
10. ALL EXISTING INTERIOR CEILINGS, LIGHT FIXTURES, DUCTWORK, AND DIFFUSERS TO BE REMOVED COMPLETELY. REFER TO ELECTRICAL AND MECHANICAL FOR ADDITIONAL INFORMATION.
11. ALL EXISTING PARTITIONS AND DOORS AND MILLWORK TO BE REMOVED COMPLETELY UNLESS NOTED INCLUDING ANY OUTLETS, SWITCHES, ETC. REFER TO MEP DRAWINGS FOR ADDITIONAL INFORMATION.
12. ALL EXISTING FLOORING TO BE REMOVED COMPLETELY. SCRAPE OR GRIND FLOORS TO REMOVE ANY EXISTING ADHESIVES OR REMAINING SUBSTRATES. PATCH, GRIND OR FLOAT FLOORS AS REQUIRED TO ENSURE FLUSH TRANSITION. PREPARE FLOOR AS REQUIRED FOR NEW FINISHES. G.C. TO ENSURE THAT FLOOR SLOPES NO MORE THAN 1/8 INCH PER 10 FEET.
13. EXISTING WALL TO REMAIN. PATCH AND REPAIR GYP. BD. AS REQUIRED.
14. EXISTING STUD WALL AND BRICK VENEER CONSTRUCTION TO BE REMOVED UP TO 10'-0"± A.F.F. TO ACCOMMODATE NEW STOREFRONT. REFER TO A201 FOR EXTENT OF STOREFRONT.
15. EXISTING ROOF HATCH AND LADDER TO REMAIN.
16. SAW CUT AND REMOVE EXISTING SLAB AND FOUNDATION AS REQUIRED FOR NEW CONSTRUCTION. REFER TO A101 AND STRUCTURAL DRAWINGS FOR ADDITIONAL INFORMATION
17. DEMOLISH ALL PLUMBING FIXTURES. REMOVE SUPPLY AND RETURN LINES COMPLETELY. CAP LINES UNDER CONC. SLAB.
18. MODIFY EXISTING EXTERIOR STUD WALL TO CREATE NEW PARAPET HEIGHT ALONG FUTURE MEDICAL OFFICE. SEE A201 FRONT ELEVATION. COORDINATE EXTENT OF DEMOLITION WITH NEW FINISHED PARAPET HEIGHT OF 19'-6".
19. DEMOLISH ALL RTU'S, CURBS, DUCTWORK, DIFFUSERS, BACK TO THE EXISTING ROOF OPENING TYP. INFILL OPENINGS WITH FRAMING, METAL DECK, INSULATION, AND ROOF MEMBRANE TO BE FLUSH WITH EXISTING METAL DECK.
20. EXISTING FLAGPOLE TO BE REMOVED. PATCH AND REPAIR BRICK AS REQUIRED TO MATCH ADJACENT FINISH.
21. EXISTING HOSE BIB TO REMAIN
22. EXISTING GAS SERVICE AND METER TO REMAIN

GENERAL NOTES

1. FIELD VERIFY ALL DRAWINGS AND DIMENSIONS WITH EXISTING CONDITIONS.
2. CONTRACTOR IS RESPONSIBLE FOR MAINTAINING REQUIRED FIRE-RATING AND FIRE-PROOFING IN ALL INSTANCES.
3. CONTRACTOR TO PROVIDE FIRE EXTINGUISHERS AS REQUIRED. PROVIDE BLOCKING AS REQUIRED. VERIFY QUANTITY AND LOCATIONS WITH LOCAL OFFICIALS.
4. G.C. TO REMOVE ALL DEBRIS AND/OR RECYCLABLE MATERIALS. DO NOT STORE ON SITE ONCE REMOVED FROM BUILDING.
5. REFER TO PLUMBING DRAWINGS FOR REUSE AND DEMOLITION OF EXISTING PLUMBING.
6. CONTRACTOR IS TO REMOVE AND PROPERLY DISPOSE OF EXISTING KITCHEN AND BATHROOM, SYSTEMS (CAPTIVEAIRE), THIS INCLUDES EXISTING EXHAUST FANS, MAKE UP AIR UNIT AND THEIR DUCTS, CONTROLS, AND GAS LINES. CONTRACTOR IS TO CAP THE ROOF CURBS WEATHER TIGHT AFTER EQUIPMENT REMOVAL. CONTRACTOR IS TO VERIFY LOCATION OF ALL LINES AND EQUIPMENT PRIOR TO DEMOLITION.
7. EXISTING GAS LINES TO THE ROOF TOP UNITS AND WATER HEATER ARE TO BE PRESERVED FOR FUTURE USE. GAS LINES TO KITCHEN EQUIPMENT ARE TO BE REMOVED AND CAPPED AT LINE BRANCHES, WITH A SHUT OFF VALVE.
8. WATER HEATER EXHAUST, INTAKE, GAS PIPING SHALL REMAIN AS IS AND SHOULD BE PROTECTED DURING CONSTRUCTION.
9. CONTRACTOR SHALL INFILL AND SEAL ALL EXISTING FLOOR SINKS AND TROUGHS PER CODE, AND CAP AND SEAL ALL ASSOCIATED VENTS AT FLOOR LEVEL.
10. ANY EXISTING CLEAN OUT SHOULD BE PRESERVED WHEN POSSIBLE, OR CONVERTED FROM A WALL TO A FLOOR CLEAN OUT.
11. ALL FLOOR DRAINS AND ASSOCIATED VENTS SHOULD BE CAPPED AND SEALED PER CODE. ONLY THE FLOOR DRAIN IN THE JANITORS CLOSET SHALL REMAIN.
12. CONTRACTOR IS TO REMOVE ALL EXISTING WATER LINES THAT ARE NOT BEING REUSED SEE PLUMBING DRAWINGS.

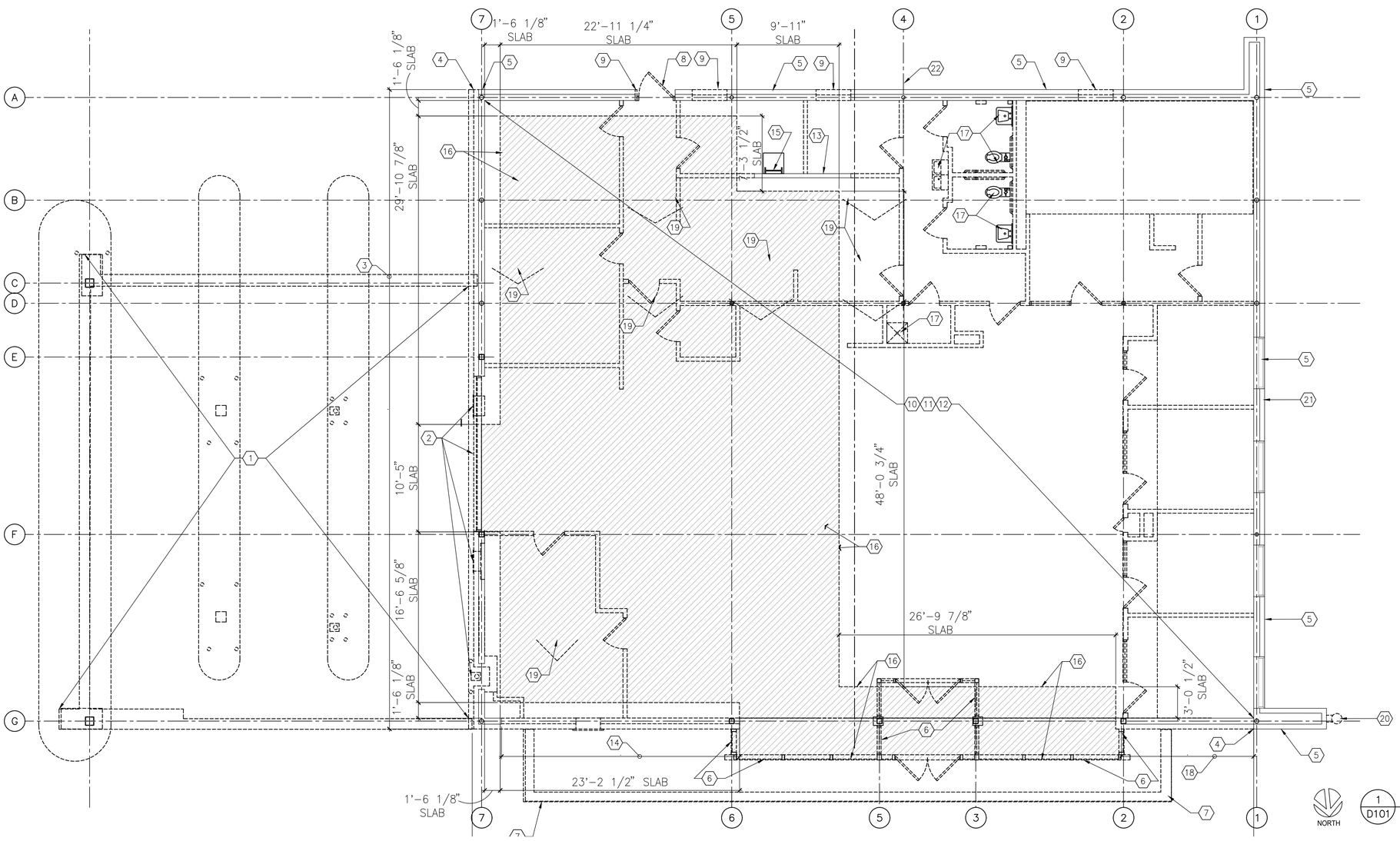

1 D101 DEMOLITION PLAN
SCALE: 3/16" = 1'-0"

RELEASE FOR CONSTRUCTION
AS NOTED ON PLANS REVIEW
DEVELOPMENT SERVICES
LEE'S SUMMIT, MISSOURI
06/17/2020

CASCO
12 Sunnen Drive, Suite 100, St. Louis, MO 63143 T: 314.645.2400
MIDLAND
CIVIL CONTRACTOR PROJECTS, LLC

Starbucks & Medical Office

155 S.W. MO-150 HWY
LEE'S SUMMIT, MO 64802

CONSTR. DOC. & REVISIONS

No.	Description	Date
	Owner Review	05/12/20
	Owner Review 2	06/04/20

CASCO DIVERSIFIED CORPORATION
ARCHITECTURAL
CERTIFICATE OF AUTHORITY
#000329 12/31/21

STATE OF MISSOURI
KEYMA L. BULLOCK
NUMBER A-2004011669
ARCHITECT

PROFESSIONAL OF RECORD
BULLOCK, KEYMA L.
License NO. 2004011669
Expiration Date 12/31/20

Drawn By/Checked By:	MS/MSD
Project Number	320488
Permit Date	06-17-20

DEMOLITION PLAN

D101

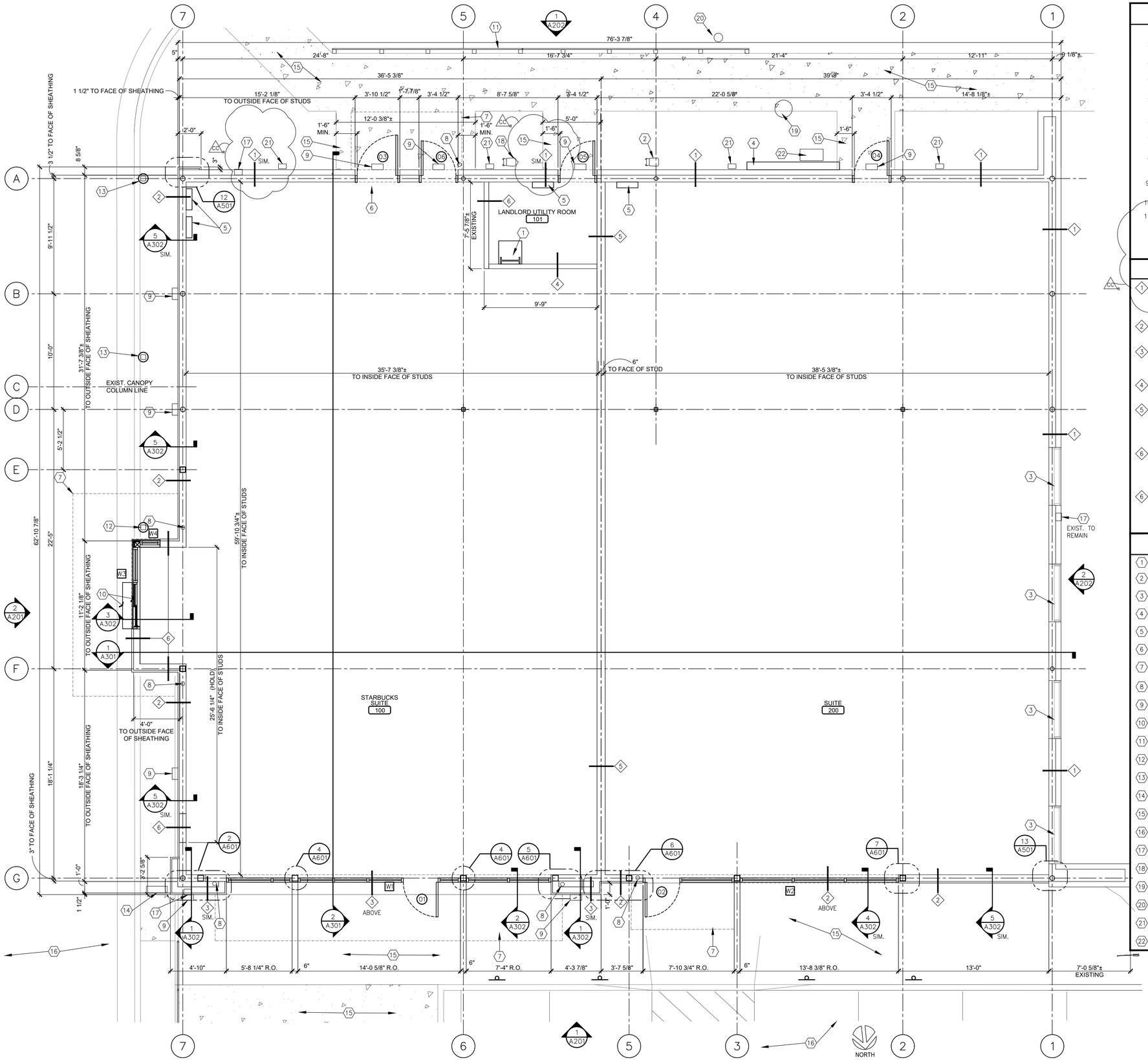

GENERAL NOTES

1. FIELD VERIFY ALL DRAWINGS AND DIMENSIONS WITH EXISTING CONDITIONS.
2. UNLESS NOTED OTHERWISE, ALL FLOOR PLAN WALL DIMENSIONS ARE TO FACE OF FINISHED WALL TO FACE OF FINISHED WALL.
3. UNLESS NOTED OTHERWISE, ALL EXTERIOR DIMENSIONS ARE TO THE FACE OF FINISH OR ROUGH OPENING.
4. UNLESS NOTED OR SHOWN OTHERWISE, DOORS ARE TO BE LOCATED 4-1/2" OFF OF THE ADJACENT FINISHED WALL SURFACE.
5. ALL WOOD CONSTRUCTION ASSOCIATED WITH THIS WORK SHALL BE FIRE RETARDANT TREATED (FRT). ALL NEW FRAMING AT STOREFRONT AND ABOVE CEILING SHALL BE NON-COMBUSTIBLE.
6. CONTRACTOR IS RESPONSIBLE FOR MAINTAINING REQUIRED FIRE-RATING AND FIRE-PROOFING SYSTEMS IN ALL INSTANCES.
7. CONTRACTOR TO VERIFY WITH FIRE DEPARTMENT THE QUANTITY OF LOCATION OF FIRE EXTINGUISHERS REQUIRED FOR UNFINISHED SHELL SPACE.
8. SUBCONTRACTORS SHALL BE RESPONSIBLE FOR THE CLEAN-UP OF THE BUILDING FOR THEIR RESPECTIVE TRADE AT THE COMPLETION OF WORK EACH DAY. AT ALL TIMES REMOVE WASTE MATERIAL, TRASH AND DEBRIS AND LEGALLY DISPOSE OF.
9. PROVIDE LOW PROFILE THRESHOLD AT ALL EXTERIOR DOORS. THRESHOLD HEIGHT 1/2" H. MAX., TYPICAL.
10. SEE STRUCTURAL DRAWINGS FOR ADDITIONAL INFORMATION.
11. STREET ADDRESS NUMBERS SHALL BE PLACED ON THE BUILDING WHERE DIRECTED BY THE FIRE DEPARTMENT, WITH LETTER HEIGHT AND COLOR TO BE DICTATED BY THE FIRE DEPARTMENT. THE LETTERS SHALL BE ARABIC NUMBERS OR ALPHABET LETTERS A MINIMUM OF 4" HIGH WITH MINIMEM STROKE WIDTH OF 0.5 INCH AND SHALL CONTRAST WITH THEIR BACKGROUND.

WALL TYPE LEGEND

1. EXISTING EXTERIOR WALL:
EXISTING EXTERIOR BRICK VENEER ON METAL STUD WALL TO REMAIN. PATCH EXISTING GYP. BD. AS REQUIRED. EXTEND METAL STUD AND BRICK VENEER TO NEW PARAPET HEIGHT SHOWN ON EXTERIOR ELEVATIONS AT SIM. STUD SIZE AND BRICK TO MATCH EXISTING.

2. MODIFIED EXTERIOR WALL (EIFS):
NEW EIFS ON EXISTING METAL STUD AND EXISTING SHEATHING TO REMAIN. PATCH EXISTING INTERIOR GYP. BD. AS REQUIRED.

3. MODIFIED EXTERIOR WALL(SIDING):
NEW FIBER CEMENT SIDING AND 7/8" METAL FURRING ON EXISTING METAL STUD AND EXISTING SHEATHING TO REMAIN. PATCH EXISTING INTERIOR GYP. BD. AS REQUIRED.

4. EXISTING INTERIOR WALL:
EXISTING INTERIOR GYP. BOARD ON METAL STUD WALL TO REMAIN. PATCH EXISTING GYP. BD. AS REQUIRED.

5. NEW DEMISING WALL – UL DESIGN U419 (6" METAL STUDS):
(2) LAYERS 5/8" TYPE 'X' GYP. BD. (MOISTURE RESISTANT AT WET LOCATIONS) ON BOTH SIDES OF 6" (20 GA.) METAL STUDS AT 16" O.C. TO UNDERSIDE OF DECK. PROVIDE SOUND ATTENUATION INSULATION BETWEEN STUDS. SEE **REFER TO DETAIL 10/A502 AND SHT. G-100** FOR ADDITIONAL INFORMATION.

6. NEW INTERIOR WALL:
(1) LAYERS 5/8" TYPE 'X' GYP. BD. (MOISTURE RESISTANT AT WET LOCATIONS) ON BOTH SIDES OF 3 5/8" (20 GA.) METAL STUDS AT 16" O.C. TO UNDERSIDE OF DECK. PROVIDE SOUND ATTENUATION INSULATION BETWEEN STUDS. REFER TO 8/A502 FOR ADDITIONAL INFORMATION.

6. NEW EXTERIOR WALL:
NEW FIBER CEMENT SIDING AND 7/8" METAL FURRING ON NEW SHEATHING AND NEW 6" METAL STUD @ 16" O.C. REFER TO 3/A302 FOR ADDITIONAL INFORMATION.

FLOOR PLAN KEYED NOTES

1. EXISTING ROOF ACCESS LADDER AND HATCH.
2. EXISTING GAS SERVICE AND METER TO REMAIN. REFER TO PLUMBING SHEETS FOR ADDITIONAL INFORMATION.
3. EXISTING WINDOW TO REMAIN
4. ELECT. METER & DISCONNECT
5. ELECT.PANELS
6. PROVIDE 1/2" PLYWOOD BLOCKING FOR FLY FAN ABOVE DOOR
7. CANOPY ABOVE SHOWN DASHED RE:10/A501
8. CANOPY DOWN SPOUT TIE IN TO TO STORM SYSTEM
9. WALL SCONCE/EMERGENCY LIGHT (TYP) REFER TO ELECTRICAL DWGS.
10. DRIVE -THRU WINDOW AND SHELF RE:A504
11. EQUIPMENT SCREEN FENCE RE:1/A506
12. NON-ILLUMINATED PROTECTIVE BOLLARD & FOOTING, TYP., RE: 13A/A506
13. ILLUMINATED BOLLARD & FOOTING, TYP. OF (6) RE: 13B/A506
14. DRIVE THRU SIGN REFER TO SITE PLAN
15. CONCRETE SIDEWALK, CURB AND CURB CUTS BY CIVIL
16. PARKING LOT PAVEMENT AND STRIPING BY CIVIL
17. HOSE BIB. RE: 1/A502
18. NEW GAS METER
19. EXISTING WATER METER VAULT
20. EXISTING CLEAN OUT
21. EXISTING DOWNSPOUT
22. RELOCATED IRRIGATION VAULT

1 A101 FLOOR PLAN
SCALE: 1/4" = 1'-0"

RELEASE FOR CONSTRUCTION
AS NOTED ON PLANS REVIEW
DEVELOPMENT SERVICES
LEE'S SUMMIT, MISSOURI
08/17/2020

CASCO
12 Summer Drive, Suite 100, St. Louis, MO 63143 T: 314.429.1100

MIDLAND
GENERAL CONTRACTORS INCORPORATED

Starbucks & Medical Office
155 S.W. MO-150 HWY
LEE'S SUMMIT, MO 64802

CONSTR. DOC. & REVISIONS

No.	Description	Date
	Owner Review	05/12/20
	Owner Review 2	06/04/20
CC	City Comments	06/30/20

CASCO DIVERSIFIED CORPORATION
ARCHITECTURAL
CERTIFICATE OF AUTHORITY
#000329 12/31/21

STATE OF MISSOURI
KEYMAL BULLOCK
NUMBER A-2004011669
ARCHITECT
07/06/20

PROFESSIONAL OF RECORD
BULLOCK, KEYMA L.
License NO. 2004011669
Expiration Date 12/31/20

Drawn By/Checked By:	RMT/MSD
Project Number	320488
Permit Date	06-17-20

FLOOR PLAN

A101

GENERAL ROOF NOTES

1. CONSIDERATION WILL NOT BE GRANTED FOR ANY ALLEGED MISUNDERSTANDINGS OF THE AMOUNT OF WORK TO BE PERFORMED. TENDER OF PROPOSAL SHALL CONVEY FULL AGREEMENT TO THE ITEMS AND CONDITIONS INDICATED ON THE DRAWINGS. SHOULD THE CONTRACTOR FIND DISCREPANCIES OR OMISSIONS IN THE CONTRACT DOCUMENTS OR BE IN DOUBT AS TO THE INTENT THEREOF, THE CONTRACTOR SHALL OBTAIN WRITTEN CLARIFICATION FROM THE ARCHITECT AND/OR THE OWNER'S REPRESENTATIVE PRIOR TO THE SUBMITTING HIS PROPOSAL FOR WORK.

2. CONTRACTOR WILL ENSURE POSITIVE DRAINAGE OF THE ROOF TO DRAINS AND SCUPPERS WITHOUT PONDING.

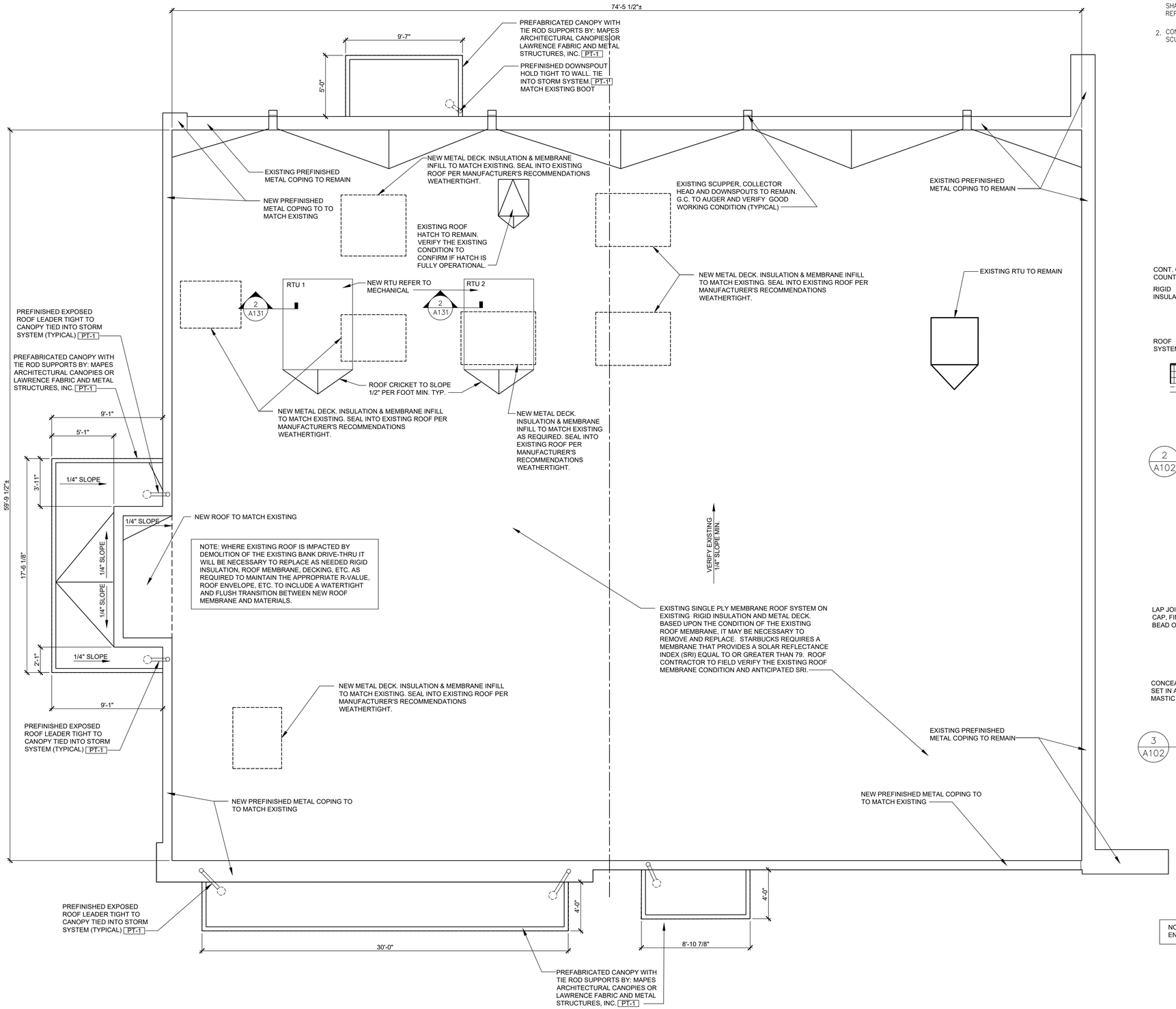

NORTH

1 A102 ROOF PLAN
SCALE: 1/4" = 1'-0"

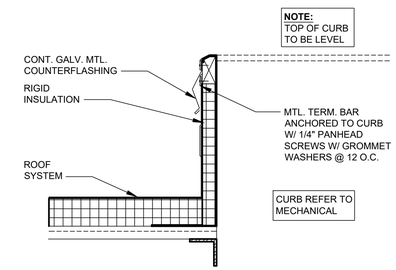

2 A102 DETAIL @ ROOF CURB
SCALE: 1-1/2" = 1'-0"

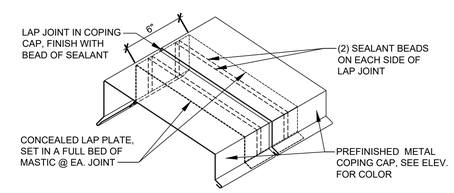

3 A102 TYPICAL COPING LAP JOINT
SCALE: 1-1/2" = 1'-0"

NOTE: LANDLORD'S ROOFER TO BE USED TO ENSURE EXISTING ROOF WARRANTY REMAINS.

RELEASE FOR CONSTRUCTION
AS NOTED ON PLANS REVIEW
DEVELOPMENT SERVICES
LEE'S SUMMIT, MISSOURI
08/17/2020

CASCO
12 Summer Drive, Suite 100, St. Louis, MO 63143 T: 314.429.1100

MIDLAND
GENERAL CONTRACTORS INCORPORATED

Starbucks & Medical Office
155 S.W. MO-150 HWY
LEE'S SUMMIT, MO 64802

CONSTR. DOC. & REVISIONS

No.	Description	Date
	Owner Review	05/12/20

CASCO DIVERSIFIED CORPORATION
ARCHITECTURAL
CERTIFICATE OF AUTHORITY
#000329 12/31/21

STATE OF MISSOURI
KEYMA L. BULLOCK
NUMBER A-2004011669
ARCHITECT

PROFESSIONAL OF RECORD
BULLOCK, KEYMA L.
License NO. 2004011669
Expiration Date 12/31/20

Drawn By/Checked By:	RMT/MSD
Project Number	320488
Permit Date	06-17-20

ROOF PLAN

A102

RELEASE FOR CONSTRUCTION
AS NOTED ON PLANS REVIEW
DEVELOPMENT SERVICES
LEE'S SUMMIT, MISSOURI
06/17/2020

Material Legend

Precast base: B-1	Manf.	Color: Match Cement fiber finish CF-1	Description: Base
Cement fiber siding: CF-1	Manf. Nichiha	Color: Siding: Composite wall panel Vintagewood -Redwood	Description: Front and (Street) End Wall Refer To Notes
E.I.F.S.: EIFS-1	Manf. StoCorp	Color: StoTherm Essence - Sto 32121 48 - C2 Standard Medium Finish	Description: Main Field
Paint: PT-1 PT-2	Manf. Sherwin Williams Sherwin Williams	Color: Black Galv. Metal Painted Match Adjacent finish	Description: Canopy Curb and H.M. Door
Metal: PFM-1	Manf. Metal Era	Color: Match Existing	Description: Prefinished For Metal Coping
Storefront: SF-1	Manf. Kawneer	Color: Kawneer #29 Black Anodized	Description: Storefront Framing
Aluminum Soffit system: SF-1	Manf. Armstrong	Color: Armstrong "Metal Works" linear 7160 Color - Flat Black	Description: Canopy soffit panels

Material Notes:

Install per manufacturers instruction and recommendations. Use manufacturer certified installer.
Provide all trim and accessories as required to provide a complete installation.

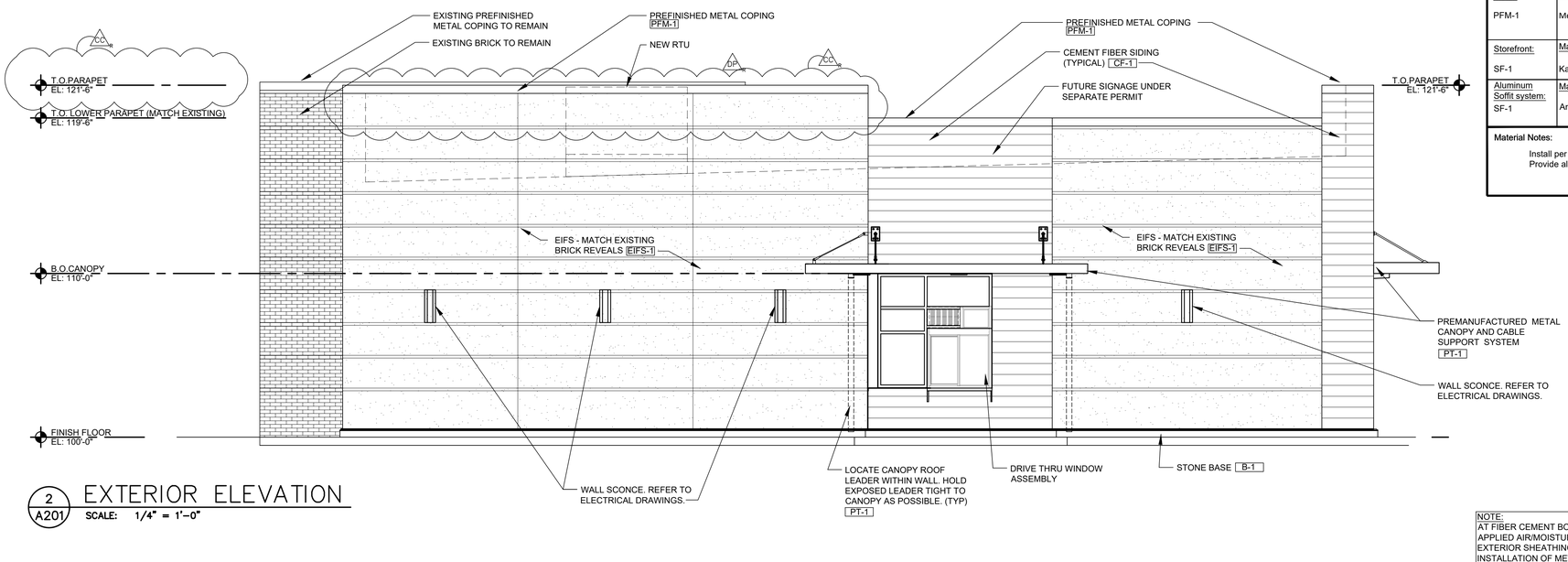

2 A201 EXTERIOR ELEVATION
SCALE: 1/4" = 1'-0"

NOTE:
AT FIBER CEMENT BOARD, APPLY LIQUID APPLIED AIR/MOISTURE BARRIER TO EXTERIOR SHEATHING BEFORE INSTALLATION OF METAL FURRING. APPLY LIQUID APPLIED AIR/MOISTURE BARRIER TO FURRING BEFORE INSTALLATION OF FIBER CEMENT BOARD TRIM. COLOR OF SUBSTRATE AND FURRING TO BE "FLAT BLACK".

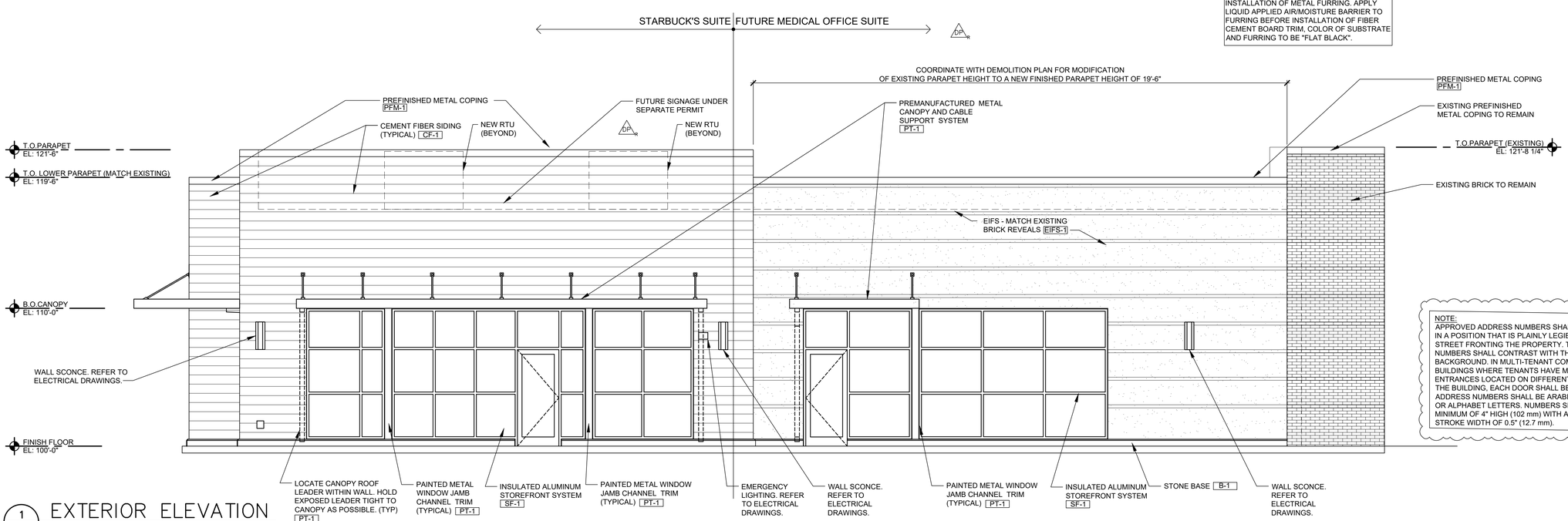

NOTE:
APPROVED ADDRESS NUMBERS SHALL BE PLACED IN A POSITION THAT IS PLAINLY LEGIBLE FROM THE STREET FRONTING THE PROPERTY. THESE NUMBERS SHALL CONTRAST WITH THEIR BACKGROUND. IN MULTI-TENANT COMMERCIAL BUILDINGS WHERE TENANTS HAVE MULTIPLE ENTRANCES LOCATED ON DIFFERENT SIDES OF THE BUILDING, EACH DOOR SHALL BE ADDRESSED. ADDRESS NUMBERS SHALL BE ARABIC NUMERALS OR ALPHABET LETTERS. NUMBERS SHALL BE A MINIMUM OF 4" HIGH (102 mm) WITH A MINIMUM STROKE WIDTH OF 0.5" (12.7 mm).

1 A201 EXTERIOR ELEVATION
SCALE: 1/4" = 1'-0"

CASCO
12 Sunnen Drive, Suite 100, St. Louis, MO 63143 T: 314.781.2777
MIDLAND
CIVIL CONTRACTOR PROGRAM LLC

Starbucks & Medical Office
155 S.W. MO-150 HWY
LEE'S SUMMIT, MO 64802

CONSTR. DOC. & REVISIONS

No.	Description	Date
	Owner Review	05/12/20
	Final Development Plan	05/27/20
	Owner Review 2	06/04/20
DP	DEVELOPMENT PLAN RESPONSE	06/17/20
CC	City Comments	06/30/20

CASCO DIVERSIFIED CORPORATION
ARCHITECTURAL
CERTIFICATE OF AUTHORITY
#000329 12/31/21

STATE OF MISSOURI
KEYMAD BULLOCK
NUMBER
A-2004011669
ARCHITECT
07/06/20

PROFESSIONAL OF RECORD
BULLOCK, KEYMA L.
License NO. 2004011669
Expiration Date 12/31/20

Drawn By/Checked By:	RMT/MSD
Project Number	320488
Permit Date	06-17-20

EXTERIOR ELEVATIONS

A201

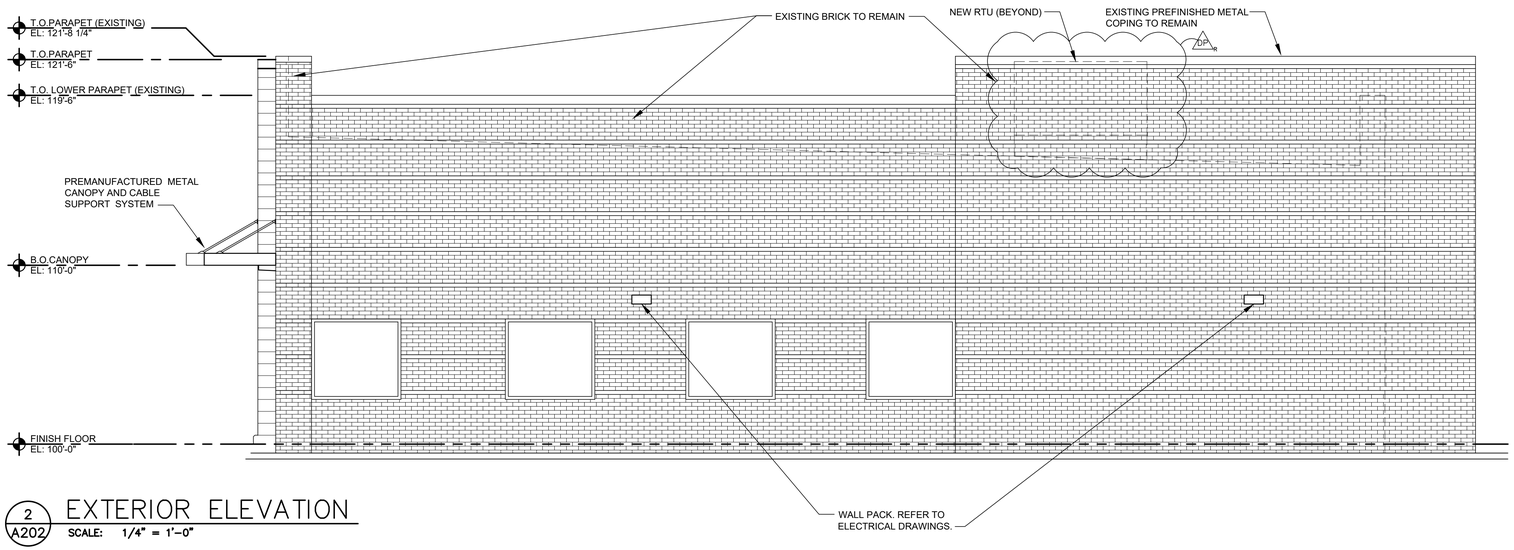

2 A202 EXTERIOR ELEVATION

SCALE: 1/4" = 1'-0"

NOTE:
AT FIBER CEMENT BOARD, APPLY LIQUID APPLIED AIR/MOISTURE BARRIER TO EXTERIOR SHEATHING BEFORE INSTALLATION OF METAL FURRING. APPLY LIQUID APPLIED AIR/MOISTURE BARRIER TO FURRING BEFORE INSTALLATION OF FIBER CEMENT BOARD TRIM. COLOR OF SUBSTRATE AND FURRING TO BE "FLAT BLACK".

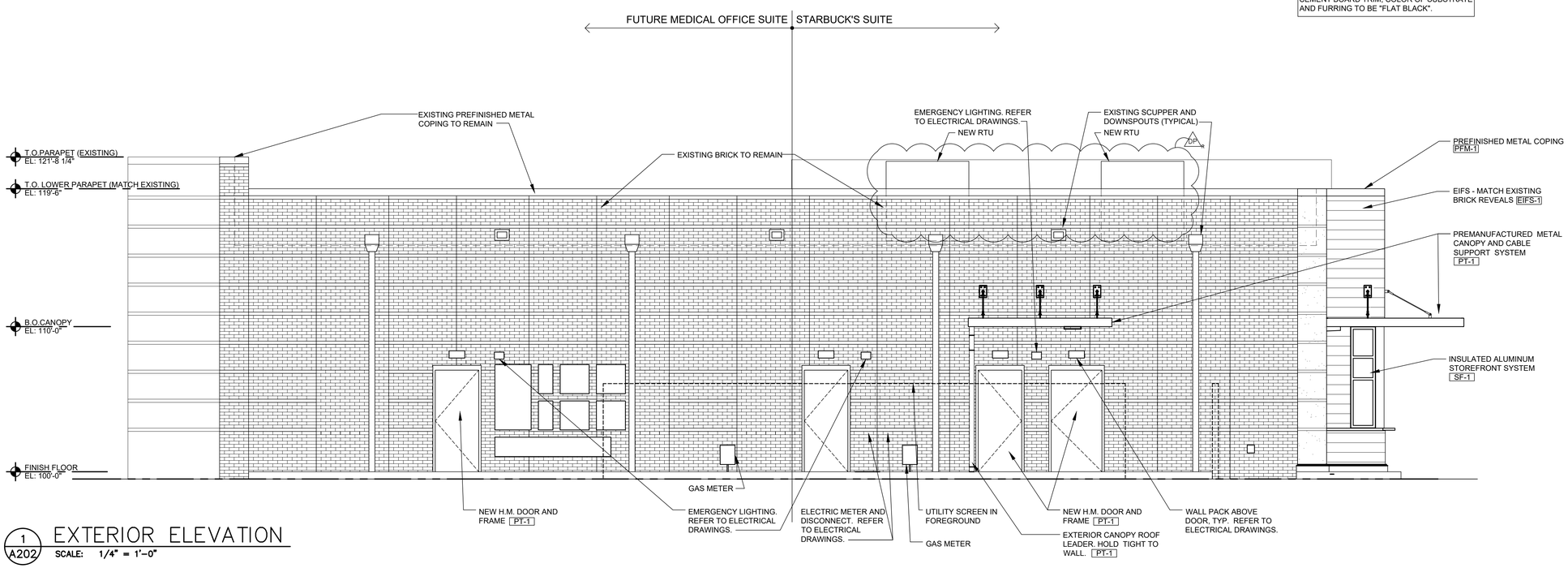

1 A202 EXTERIOR ELEVATION

SCALE: 1/4" = 1'-0"

Material Legend

Precast base: B-1	Manf.	Color: Match Cement fiber finish CF-1	Description: Base
Cement fiber siding: CF-1	Manf. Nichiha	Color: Siding: Composite wall panel Vintagewood -Redwood	Description: Front and (Street) End Wall Refer To Notes
E.I.F.S.: EIFS-1	Manf. StoCorp	Color: StoTherm Essence - Sto 32121 48 - C2 Standard Medium Finish	Description: Main Field
Paint: PT-1 PT-2	Manf. Sherwin Williams Sherwin Williams	Color: Black Galv. Metal Painted Match Adjacent finish	Description: Canopy Curb and H.M. Door
Metal: PFM-1	Manf. Metal Era	Color: Match Existing	Description: Prefinished For Metal Coping
Storefront: SF-1	Manf. Kawneer	Color: Kawneer #29 Black Anodized	Description: Storefront Framing
Aluminum Soffit system: SF-1	Manf. Armstrong	Color: Armstrong "Metal Works" linear 7160 Color - Flat Black	Description: Canopy soffit panels

Material Notes:

Install per manufacturers instruction and recommendations. Use manufacturer certified installer.
Provide all trim and accessories as required to provide a complete installation.

RELEASE FOR CONSTRUCTION
AS NOTED ON PLANS REVIEW
DEVELOPMENT SERVICES
LEE'S SUMMIT, MISSOURI
06/17/2020

CASCO
12 Summer Drive, Suite 100, St. Louis, MO 63143 T: 314.822.1111

MIDLAND GENERAL CONTRACTORS INCORPORATED

Starbucks & Medical Office

155 S.W. MO-150 HWY
LEE'S SUMMIT, MO 64802

CONSTR. DOC. & REVISIONS

No.	Description	Date
	Owner Review	05/12/20
	Final Development Plan	05/27/20
	Owner Review 2	06/04/20
DP	DEVELOPMENT PLAN RESPONSE	06/17/20

CASCO DIVERSIFIED CORPORATION
ARCHITECTURAL
CERTIFICATE OF AUTHORITY
#000329 12/31/21

STATE OF MISSOURI
KEYMA L. BULLOCK
NUMBER
A-2004011669
ARCHITECT

PROFESSIONAL OF RECORD
BULLOCK, KEYMA L
License NO. 2004011669
Expiration Date 12/31/20

Drawn By/Checked By:	RMT/MSD
Project Number	320488
Permit Date	06-17-20

EXTERIOR ELEVATIONS

A202

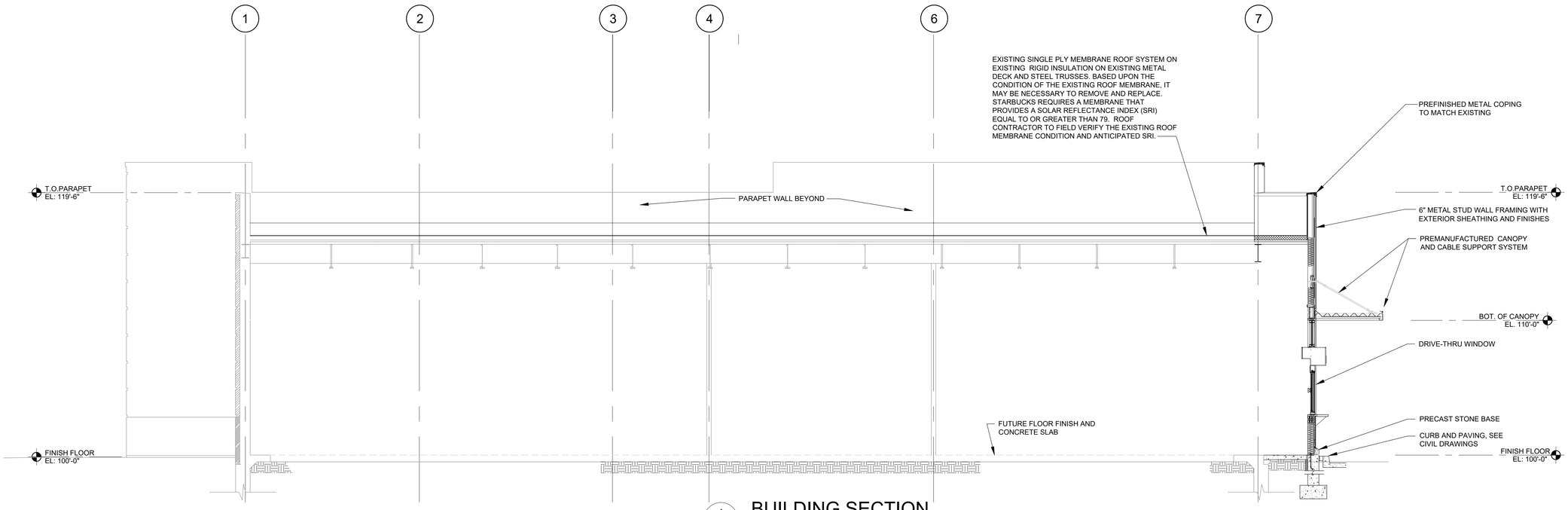

1 A301 BUILDING SECTION

SCALE: 1/4" = 1'-0"

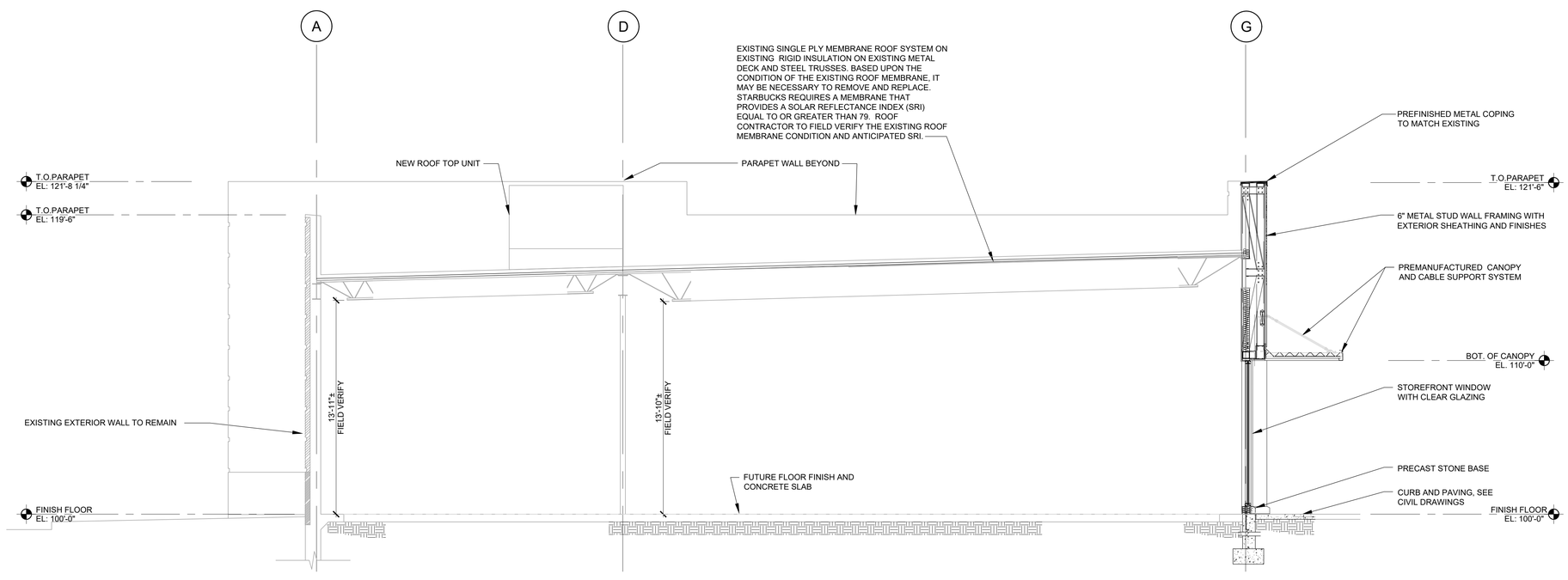

2 A301 BUILDING SECTION

SCALE: 1/4" = 1'-0"

RELEASE FOR CONSTRUCTION
AS NOTED ON PLANS REVIEW
DEVELOPMENT SERVICES
LEE'S SUMMIT, MISSOURI
06/17/2020

CASCO
12 Sumen Drive, Suite 100, St. Louis, MO 63143 T: 314-[illegible]

MIDLAND
GENERAL CONTRACTORS INCORPORATED

Starbucks & Medical Office

155 S.W. MO-150 HWY
LEE'S SUMMIT, MO 64802

No.	Description	Date
	Owner Review	05/12/20

CONSTR. DOC. & REVISIONS

CASCO DIVERSIFIED CORPORATION
ARCHITECTURAL
CERTIFICATE OF AUTHORITY
#000329 12/31/21

STATE OF MISSOURI
KEYMA L. BULLOCK
NUMBER
A-2004011669
ARCHITECT

PROFESSIONAL OF RECORD
BULLOCK, KEYMA L.
License NO. 2004011669
Expiration Date 12/31/20

Drawn By/Checked By:	RMT/MSD
Project Number	320488
Permit Date	06-17-20

BUILDING SECTIONS

A301

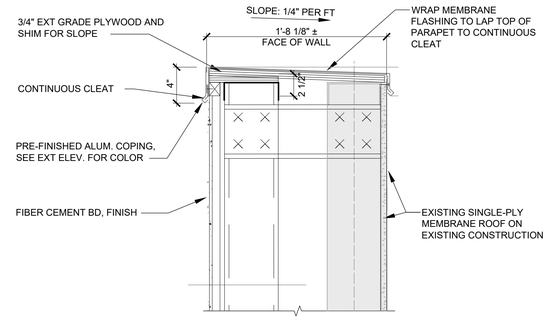

6 A302 COPING DETAIL
SCALE: 1-1/2" = 1'-0"

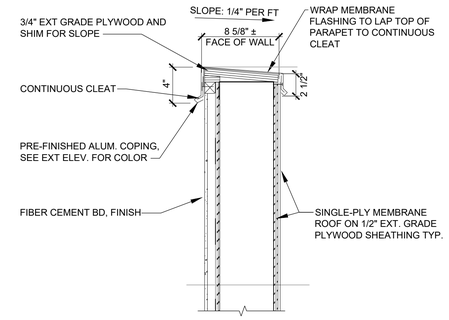

7 A302 COPING DETAIL
SCALE: 1-1/2" = 1'-0"

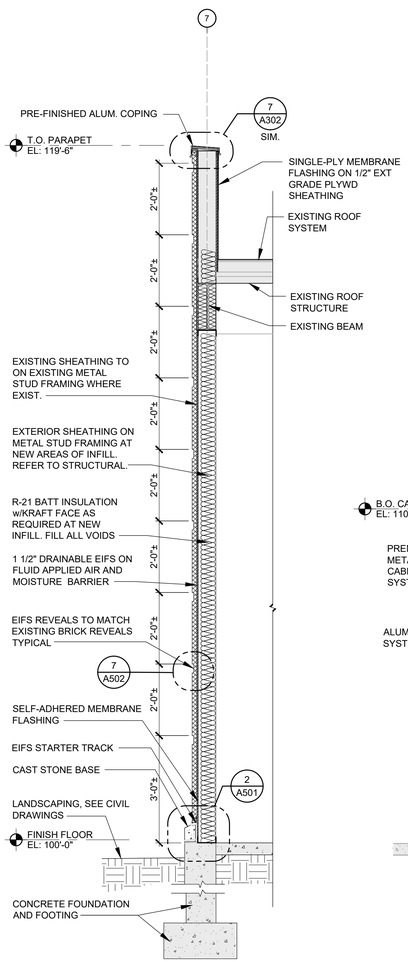

5 A302 EIFS WALL SECTION
SCALE: 1/2" = 1'-0"

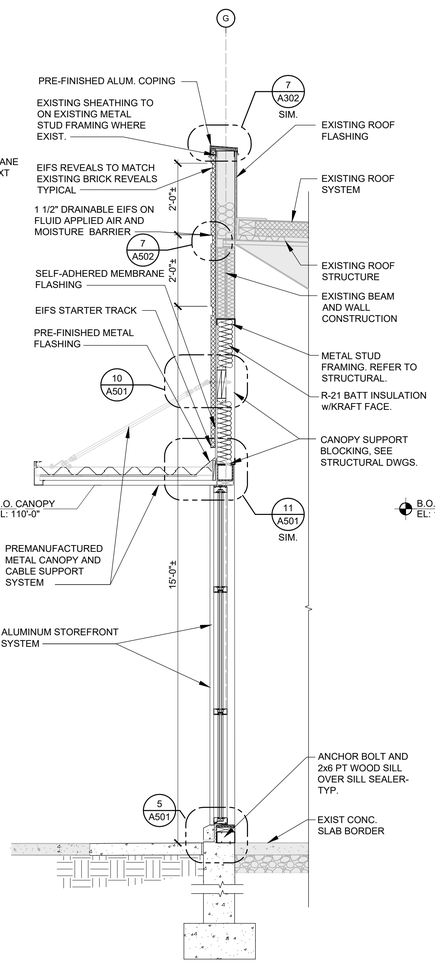

4 A302 STOREFRONT W/EIFS WALL SECTION
SCALE: 1/2" = 1'-0"

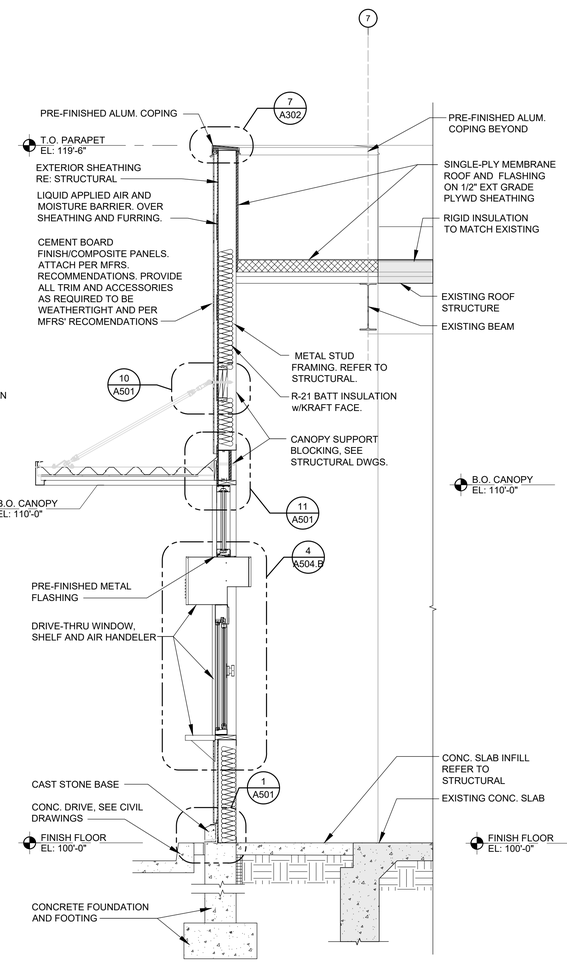

3 A302 DRIVE-THRU WALL SECTION
SCALE: 1/2" = 1'-0"

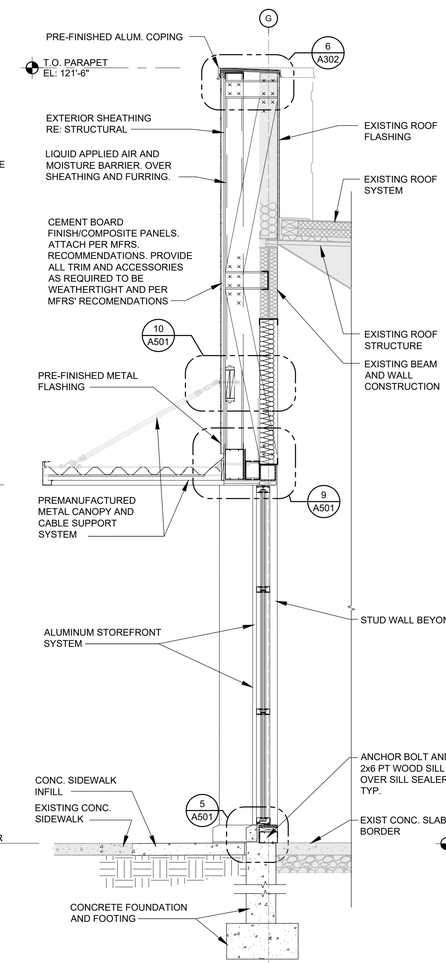

2 A302 STOREFRONT WALL SECTION
SCALE: 1/2" = 1'-0"

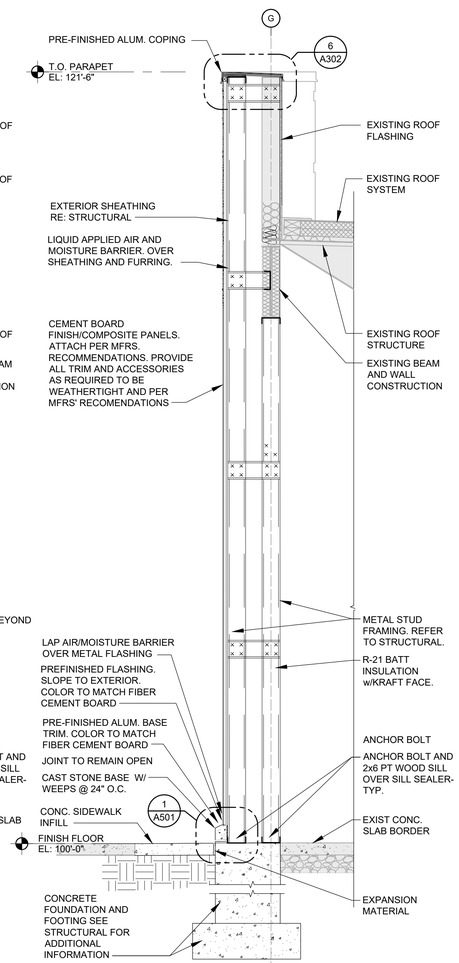

1 A302 BUMP-OUT W/ SIDING WALL SECTION
SCALE: 1/2" = 1'-0"

RELEASE FOR CONSTRUCTION
AS NOTED ON PLANS REVIEW
DEVELOPMENT SERVICES
LEE'S SUMMIT, MISSOURI
06/17/2020

CASCO
12 Sumner Drive, Suite 100, St. Louis, MO 63143 T: 314

MIDLAND GENERAL CONTRACTORS INCORPORATED

Starbucks & Medical Office

155 S.W. MO-150 HWY
LEE'S SUMMIT, MO 64802

CONSTR. DOC. & REVISIONS

No.	Description	Date
	Owner Review	05/12/20
	Owner Review 2	06/04/20

CASCO DIVERSIFIED CORPORATION
ARCHITECTURAL
CERTIFICATE OF AUTHORITY
#000329 12/31/21

STATE OF MISSOURI
KEYMA L. BULLOCK
NUMBER A-2004011669
ARCHITECT

PROFESSIONAL OF RECORD
BULLOCK, KEYMA L.
License NO. 2004011669
Expiration Date 12/31/20

Drawn By/Checked By:	RMT/MSD
Project Number	320488
Permit Date	06-17-20

WALL SECTIONS

A302

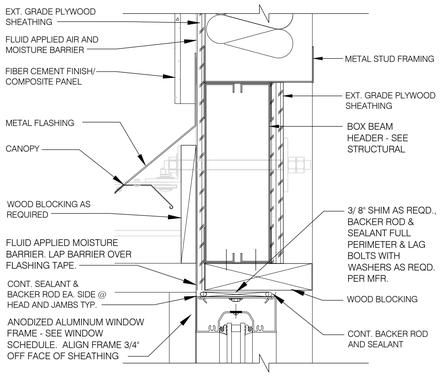

11 A501 WINDOW HEAD @ DRIVE THRU
SCALE: 3" = 1'-0"

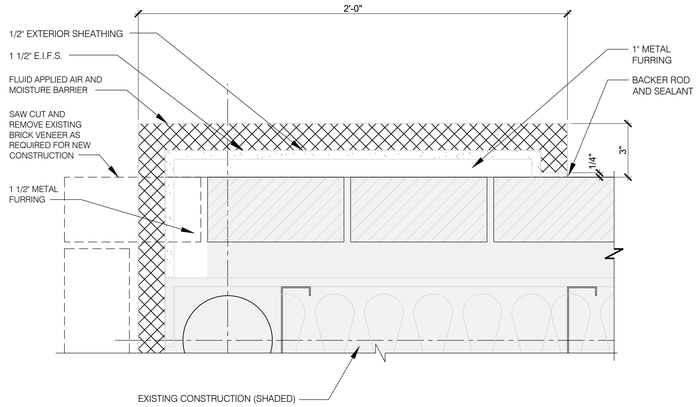

12 A501 EIFS DETAIL
SCALE: 3" = 1'-0"

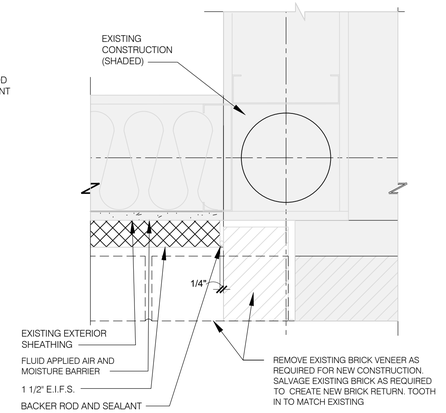

13 A501 EIFS DETAIL
SCALE: 3" = 1'-0"

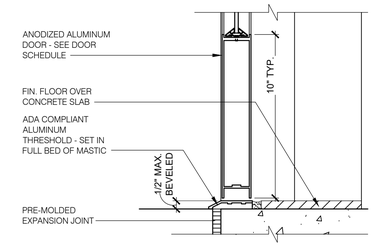

14 A501 STOREFRONT DOOR SILL
SCALE: 3" = 1'-0"

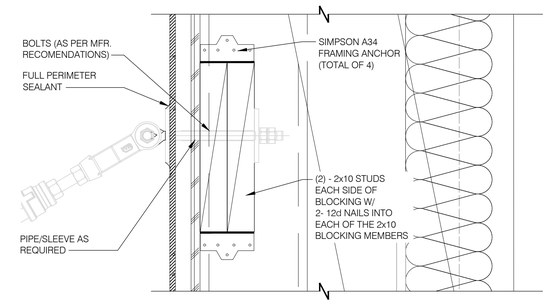

10 A501 TYP. TIE ROD DETAIL
SCALE: 3" = 1'-0"

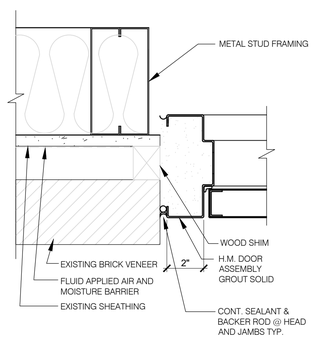

6 A501 NOT USED
SCALE: 3" = 1'-0"

7 A501 E.I.F.S. JAMB @ H.M. DOOR
SCALE: 3" = 1'-0"

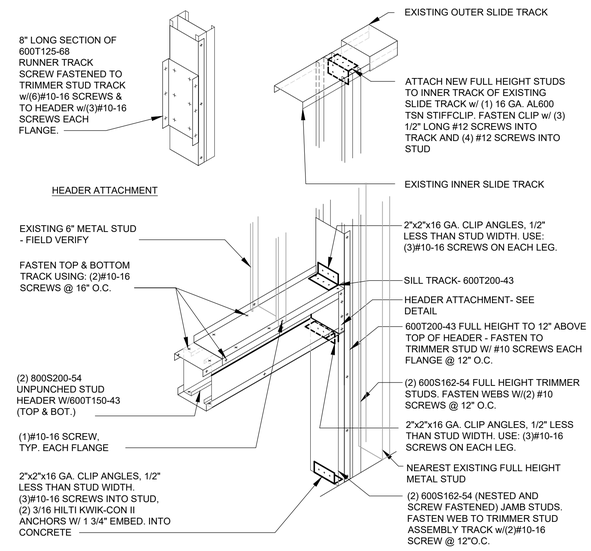

8 A501 LIGHT GAUGE HEADER DETAIL
SCALE: 3/4" = 1'-0"

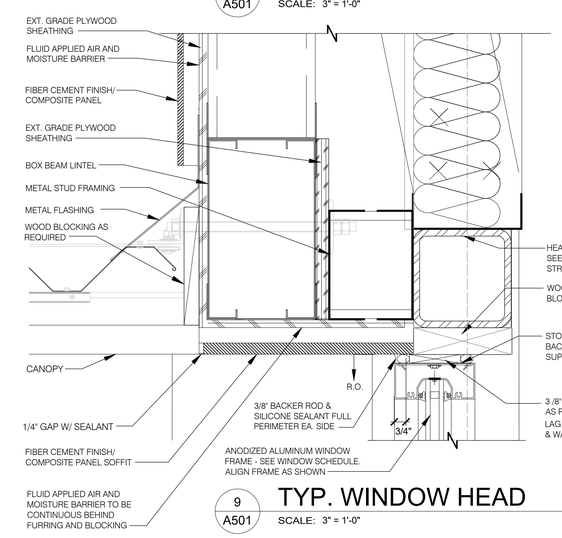

9 A501 TYP. WINDOW HEAD
SCALE: 3" = 1'-0"

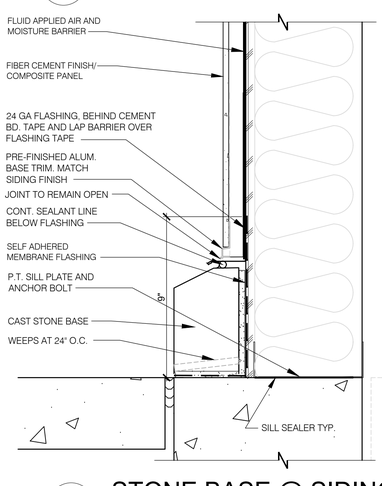

1 A501 STONE BASE @ SIDING
SCALE: 3" = 1'-0"

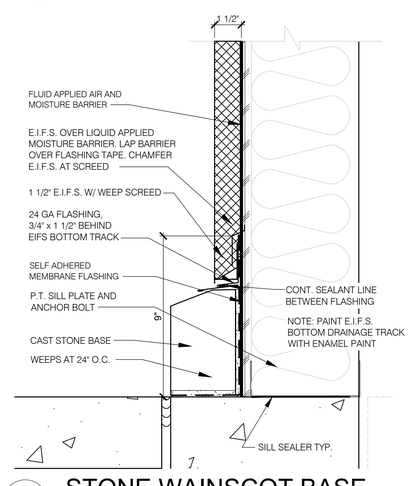

2 A501 STONE WAINSCOT BASE
SCALE: 3" = 1'-0"

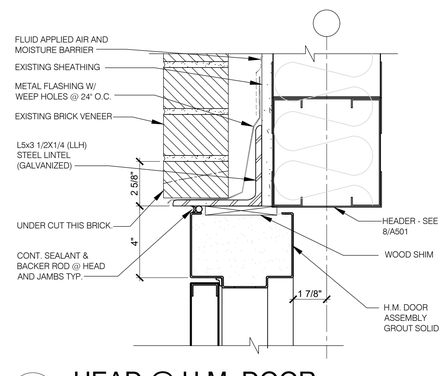

3 A501 HEAD @ H.M. DOOR
SCALE: 3" = 1'-0"

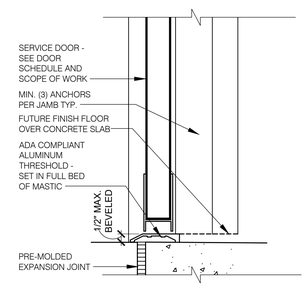

4 A501 THRESHOLD @ H.M. DOOR
SCALE: 3" = 1'-0"

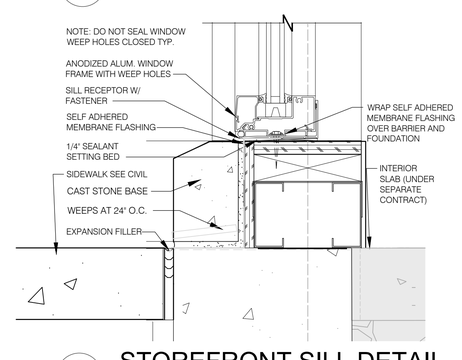

5 A501 STOREFRONT SILL DETAIL
SCALE: 3" = 1'-0"

CASCO
12 Sunnen Drive, Suite 100, St. Louis, MO 63143 T: 314.7

MIDLAND
GENERAL CONTRACTORS INCORPORATED

Starbucks & Medical Office
155 S.W. MO-150 HWY
LEE'S SUMMIT, MO 64802

No.	Description	Date
	Owner Review	05/12/20

CONSTR. DOC. & REVISIONS

CASCO DIVERSIFIED CORPORATION
ARCHITECTURAL
CERTIFICATE OF AUTHORITY
#000329 12/31/21

STATE OF MISSOURI
KEYMA L. BULLOCK
NUMBER A-2004011669
ARCHITECT

PROFESSIONAL OF RECORD
BULLOCK, KEYMA L.
License NO. 2004011669
Expiration Date 12/31/20

Drawn By/Checked By: RMT/ALS
Project Number 320488
Permit Date 06-17-20

EXTERIOR DETAILS

A501

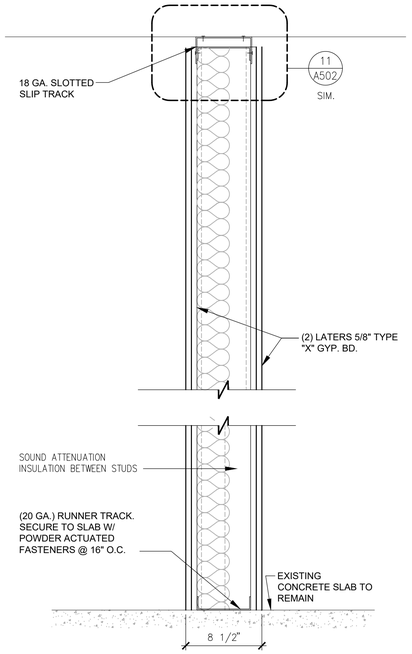

10 A502 PARTITION DETAIL

SCALE: 1-1/2" = 1'-0"

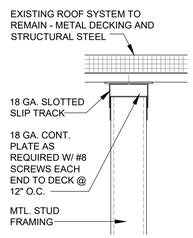

11 A502 SLIP TRACK DETAIL

SCALE: 1" = 1'-0"

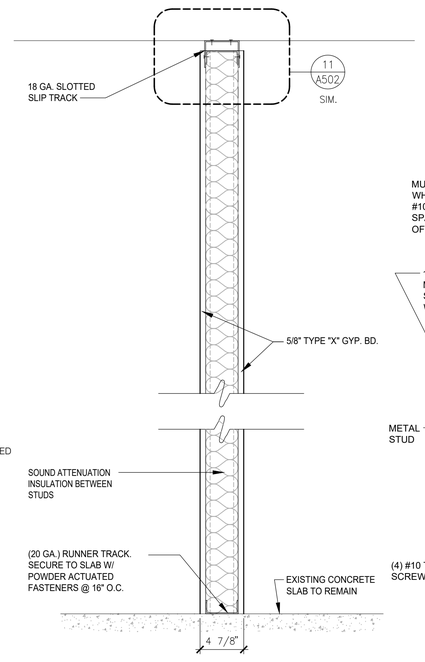

8 A502 PARTITION DETAIL

SCALE: 1-1/2" = 1'-0"

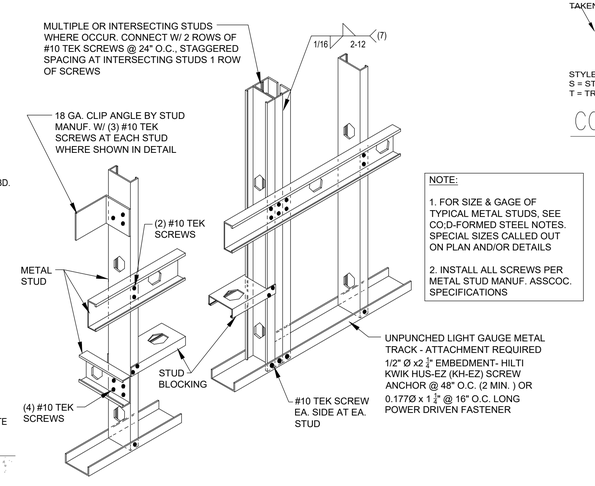

NOTE:

1. FOR SIZE & GAGE OF TYPICAL METAL STUDS, SEE CO.D-FORMED STEEL NOTES. SPECIAL SIZES CALLED OUT ON PLAN AND/OR DETAILS

2. INSTALL ALL SCREWS PER METAL STUD MANUF. ASSCOC. SPECIFICATIONS

9 A502 TYPICAL METAL STUD WALL

SCALE:M.T.S

COLD-FORMED STEEL:

1. ALL SIZING BASED ON STEEL STUD MANUFACTURERS ASSOCIATION (ICBO ER-4943P) PRODUCT TECHNICAL INFORMATION.

2. MATERIALS SHALL CONFORM TO THE FOLLOWING:
   A. GALVANIZED MATERIAL
      1. ALL GALVANIZED STUDS 12, 14 AND 16 GAUGE SHALL BE FORMED FROM STEEL THAT CORRESPONDS TO THE MINIMUM REQUIREMENTS OF ASTM A653 SS, GRADE 50, CLASS 1 OR 3 WITH A MINIMUM YIELD OF 50,000 PSI.
      2. ALL GALVANIZED 18 AND 20 GAUGE STUDS; ALL GALVANIZED TRACK, BRIDGING, END CLOSURES AND ACCESSORIES SHALL BE FORMED FROM STEEL THAT CORRESPONDS TO THE REQUIREMENTS OF ASTM A653 SS, GRADE 33 WITH A MINIMUM YIELD OF 33,000 PSI.
      3. ALL GALVANIZED STUDS, TRACK, BRIDGING AND ACCESSORIES SHALL BE FORMED FROM STEEL HAVING A GALVANIZED COATING MEETING THE REQUIREMENTS OF ASTM A525.
   B. PROPERTIES
      1. THE PHYSICAL AND STRUCTURAL PROPERTIES LISTED BY THE STEEL STUD MANUFACTURER ASSOCIATION AND AISI DESIGN MANUAL SHALL BE CONSIDERED THE MINIMUM PERMITTED.
   C. SUBSTITUTIONS
      1. ANY SUBSTITUTIONS MUST BE APPROVED IN WRITING PRIOR TO DELIVERY, BY THE ARCHITECT AND/OR ENGINEER OF RECORD.

3. INSTALLATION OF STUDS SHALL BE AS PER ASTM C1007-00 "INSTALLATION OF LOAD BEARING (TRANSVERSE AND AXIAL) STEEL STUDS AND ACCESSORIES", ASTM C955-00a "SPECIFICATION FOR LOAD BEARING (TRANSVERSE AND AXIAL) STEEL STUDS, RUNNERS (TRACK), AND BRACING OR BRIDGING FOR SCREW APPLICATION OF GYPSUM BOARD AND METAL PLASTER BASES", AND ASTM C754-00 "SPECIFICATION FOR INSTALLATION OF STEEL FRAMING MEMBERS TO RECEIVE SCREW ATTACHED GYPSUM BOARD".

4. ALL FRAMING COMPONENTS SHALL BE CUT SQUARELY FOR ATTACHMENT TO PERPENDICULAR MEMBERS, OR AS REQUIRED FOR AN ANGULAR FIT AGAINST ABUTTING MEMBERS. MEMBERS SHALL BE HELD POSITIVELY IN PLACE UNTIL PROPERLY FASTENED.

5. ALL TRACK BUTT JOINTS, ABUTTING PIECES OF TRACK SHALL BE SECURELY ANCHORED TO A COMMON STRUCTURAL ELEMENT, OR THEY SHALL BE BUTT-WELDED OR SPLICED TOGETHER.

6. ALL STUD BRIDGING SHALL BE ATTACHED IN A MANNER TO PREVENT STUD ROTATION. BRIDGING ROWS SHALL BE SPACED ACCORDING TO DIETRICH INDUST. RECOMMENDATION.

7. TEMPORARY BRACING SHALL BE PROVIDED UNTIL ERECTION IS COMPLETED.

8. STUD ENDS MUST BE SQUARELY SEATED AGAINST THE TRACK WEB. BOTH STUD FLANGES MUST BE ATTACHED TO TRACK MEMBERS AT TOP AND BOTTOM.

9. STUD BRIDGING SHALL BE PROVIDED BY 1-1/2" COLD ROLLED U-CHANNEL. THE U-CHANNEL MUST BE ATTACHED TO EACH STUD BY WELDING OR ATTACHING WITH CLIP ANGLES AND SCREWS. HORIZONTAL STRAPPING AND SOLID BRIDGING WITH TRACK MEMBERS CAN ALSO BE USED FOR BRIDGING. BRIDGING SHALL BE SPACED AT 4'0" O.C. MAX.

10. THE FOLLOWING MINIMUM COLD FORMED STEEL ATTACHMENTS SHALL BE PROVIDED U.N.O.:
    TRACK TO STRUCTURAL STEEL-----(2) - .145"Ø POWER DRIVEN FASTENER @ 1'-4" O.C.
    TRACK TO METAL DECK---------(2) - #10 TEK SCREW @ 1'-4" O.C.
    TRACK TO MASONRY----------(2) - .145"Ø POWER DRIVEN FASTENER @ 1'-4" O.C.
    STUD TO STRUCTURAL STEEL-----(1) - L2x 2x - 14 GA. CLIP ANGLE CONNECTION W/ (2) - #10 TEK SCREWS INTO METAL STUD AND (2) - .145"Ø POWER DRIVEN FASTENERS INTO STRUCTURAL STEEL.

MEMBER DEPTH:
(EXAMPLE: 6"=600 x 1/100 INCHES)
ALL MEMBER DEPTHS ARE TAKEN IN 1/100 INCHES.

FLANGE WIDTH:
(EXAMPLE: 1 5/8" = 1.625" = 162 x 1/100 INCHES)
ALL FLANGE WIDTHS ARE TAKEN IN 1/100 INCHES.

600 S 162 – 54

STYLE:
S = STUD OR JOIST SECTION
T = TRACK SECTIONS

MATERIAL THICKNESS:
(EXAMPLE: 0.054" = 54 MILS.
1 MIL = 1/1000 INCH)

MATL. THICKNESS (IN MILS)	CORRESPONDING GUAGE:
33	20
43	18
54	16
68	14
97	12
118	10

COLD-FORMED STEEL IDENTIFICATION LEGEND

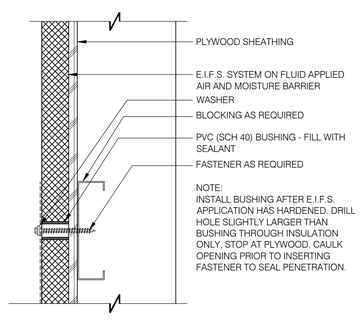

6 A502 TYP. CONNECTION THRU EIFS

SCALE: 3" = 1'-0"

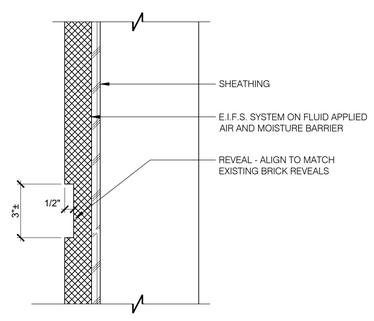

7 A502 EIFS REVEAL

SCALE: 3" = 1'-0"

NOTE: HOSE BIB BOX SHALL BE ACUDOR-ARVB OR EQUAL

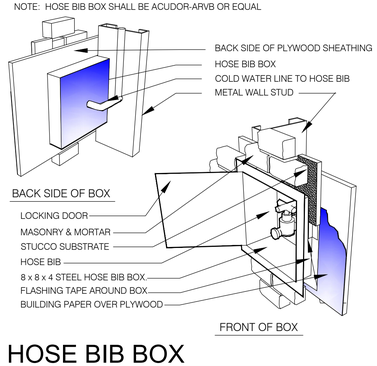

1 A502 HOSE BIB BOX

SCALE: N.T.S.

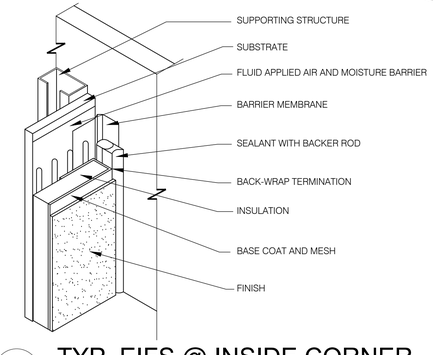

2 A502 TYP. EIFS @ INSIDE CORNER

SCALE: N.T.S.

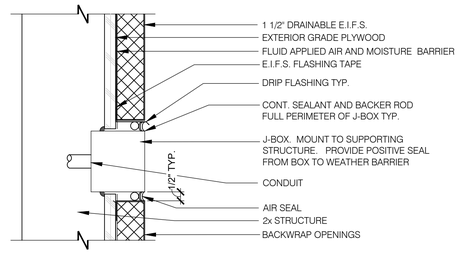

3 A502 J-BOX IN EIFS

SCALE: 3"= 1'-0"

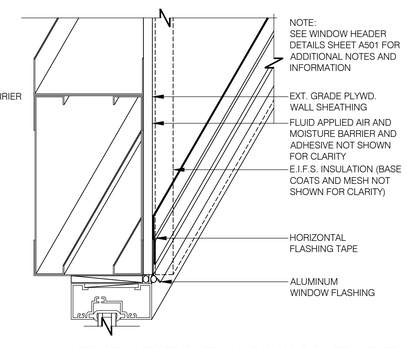

4 A502 TYP. EIFS FLASHING TAPE

SCALE: N.T.S.

NOT AN OPTION:
Do not caulk below EIFS starter track edge & galv. mtl. flashing as this will block drainage from behind EIFS.

NOTE:
E.I.F.S. DETAILS ARE INTENDED TO BE GENERIC. MANUFACTURER'S DETAILS AND RECOMMENDATIONS SHOULD BE FOLLOWED. REFER TO THE SPECIFICATIONS.

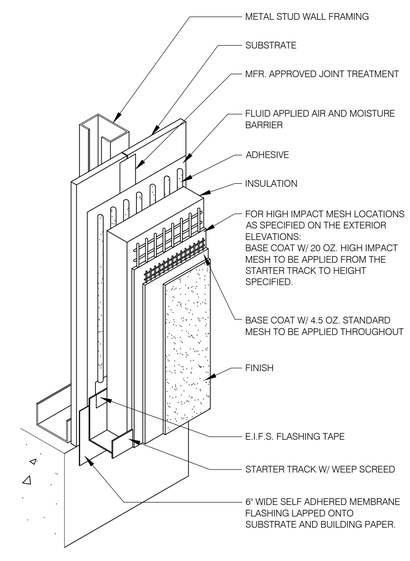

5 A502 TYP. EIFS BASE TERMINATION

SCALE: N.T.S.

RELEASE FOR CONSTRUCTION
AS NOTED ON PLANS REVIEW
DEVELOPMENT SERVICES
LEE'S SUMMIT, MISSOURI
05/17/2020

CASCO
12 Sumneh Drive, Suite 100, St. Louis, MO 63143 T: 314.

MIDLAND
GENERAL CONTRACTORS INCORPORATED

Starbucks & Medical Office

155 S.W. MO-150 HWY
LEE'S SUMMIT, MO 64802

No.	Description	Date
	Owner Review	05/12/20

CONSTR. DOC. & REVISIONS

CASCO DIVERSIFIED CORPORATION
ARCHITECTURAL
CERTIFICATE OF AUTHORITY
#000329 12/31/21

STATE OF MISSOURI
KEYMA L. BULLOCK
NUMBER A-2004011669
ARCHITECT

PROFESSIONAL OF RECORD
BULLOCK, KEYMA L.
License NO. 2004011669
Expiration Date 12/31/20

Drawn By/Checked By: RMT/MSD
Project Number 320488

Permit Date 06-17-20

MISCELLANEOUS DETAILS

A502

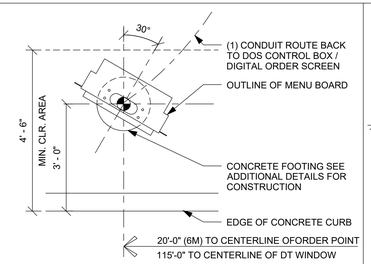

2 A504.A DTE - PRE-MENU 30 DEG
SCALE: 1/2" = 1'-0"

1 A504.A NOT USED
SCALE: NOT TO SCALE

3 A504.A NOT USED
SCALE: 1 1/2" = 1'-0"

SIGNAGE SUPPLIED AND INSTALLED UNDER SEPARATE PERMIT. ALL SITE WORK INCLUDING FOOTINGS, CONCRETE, REINFORCING, ANCHOR BOLTS AND CONDUIT.

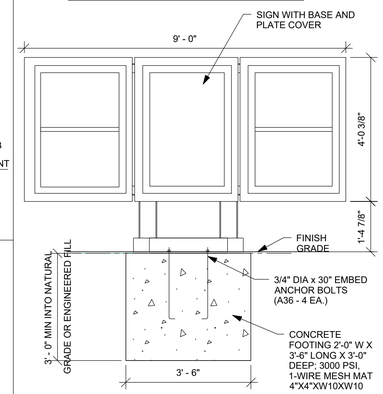

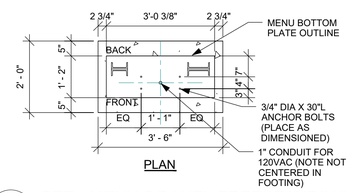

PLAN

4 A504.A DTE - MENU 5 PANEL FREESTANDING
SCALE: 1/2" = 1'-0"

5 A504.A NOT USED
SCALE: 1/2" = 1'-0"

THIS DETAIL IS FOR REFERENCE ONLY. SIGNAGE SUPPLIED AND INSTALLED BY SIGN VENDOR UNDER SEPARATE PERMIT. SITE WORK INCLUDES: FOOTINGS, CONCRETE, REINFORCING, ANCHOR BOLTS AND CONDUIT.

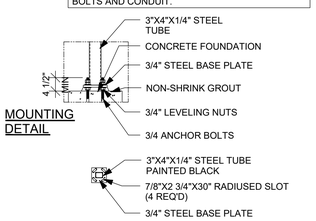

MOUNTING DETAIL

BASE PLATE PLAN

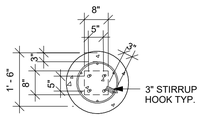

SECTION

NOTES:
1. FOOTING DEPTH MAY VARY AS PER SITE AND SOIL CONDITIONS.
2. CONCRETE RESISTANCE 3600 PSI AFTER 28 DAYS.
3. THE GROUND MUST NOT BE ALTERED AND MUST BE WELL DRAINED.
4. EXPECTED GROUND BEARING CAPACITY AT 3000 PSF
5. INSTALLATION REQUIRES SEALED ENGINEERING BY A COMPETENT PROFESSIONAL ENGINEER AS REQ'D BY LOCAL CODES

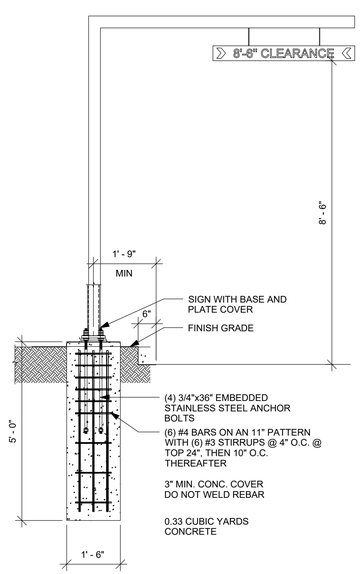

6 A504.A DTE - CLEARANCE BAR FOOTING
SCALE: 1/2" = 1'-0"

7 A504.A NOT USED
SCALE: 1/4" = 1'-0"

THIS DETAIL IS FOR REFERENCE ONLY. SIGNAGE SUPPLIED AND INSTALLED BY SIGN VENDOR UNDER SEPARATE PERMIT. SITE WORK INCLUDES FOOTINGS, CONCRETE, REINFORCING, ANCHOR BOLTS AND CONDUIT.

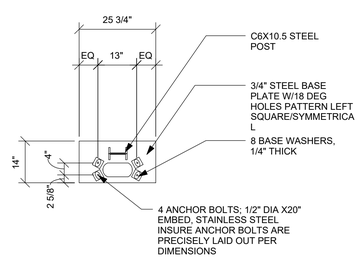

NOTES:
1. FOOTING DEPTH MAY VARY AS PER SITE AND SOIL CONDITIONS.
2. CONCRETE RESISTANCE 3600 PSI AFTER 28 DAYS.
3. THE GROUND MUST NOT BE ALTERED AND MUST BE WELL DRAINED.
4. EXPECTED GROUND BEARING CAPACITY AT 3000 PSF.

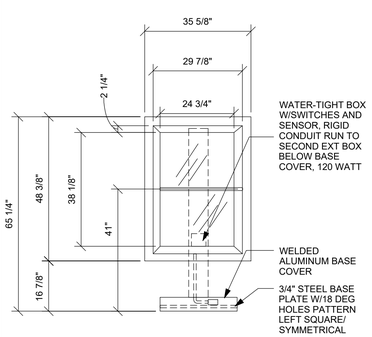

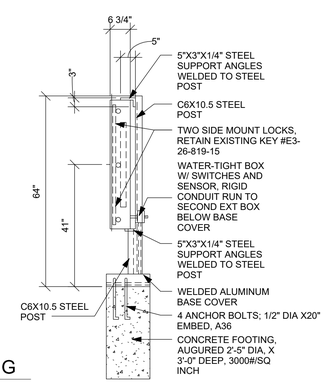

8 A504.A DTE - PRE-MENU FREESTANDING
SCALE: 1/2" = 1'-0"

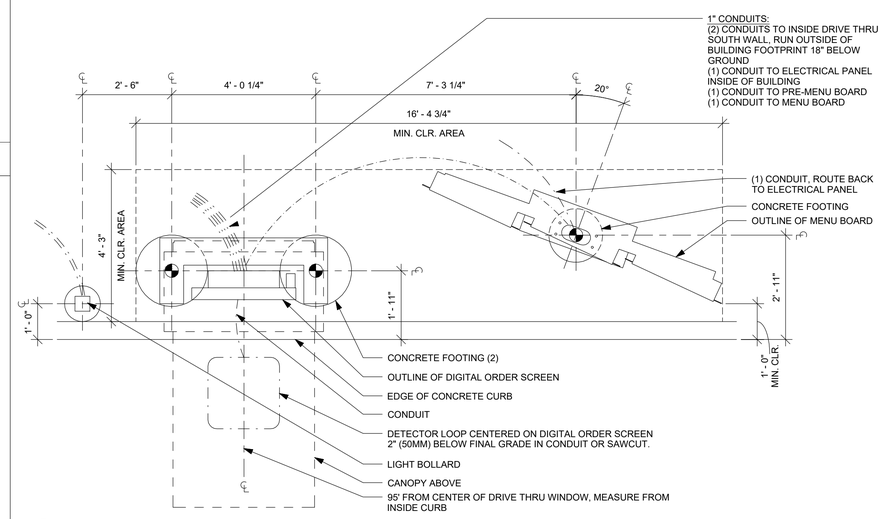

9 A504.A DTE - 5 PANEL 20° DT MENU BOARD, DIGITAL ORDER SCREEN WITH CANOPY
SCALE: 1/2" = 1'-0"

NOTES:

- COORDINATE TENANT'S FOUNDATIONS AND ANCHOR BOLTS WITH TENANT'S CONSTRUCTION MANAGER FOR ALL DRIVE-THROUGH EQUIPMENT (BOLLARDS, CONDUITS, AND THEIR FOUNDATIONS INSTALLED BY MIDLAND GC).
- ALL CONDUITS ARE REQUIRED BY MIDLAND GC.
- COORDINATE TENANT'S FOUNDATION AND ANCHOR BOLTS WITH TENANT'S CONSTRUCTION MANAGER: TABITHA SHERMAN 469-600-7865 AND MIDLAND CONSTRUCTION DIRECTOR

CASCO
12 Summit Drive, Suite 100, St. Louis, MO 63143 T: 314.7
MIDLAND GENERAL CONTRACTORS INCORPORATED

Starbucks & Medical Office
155 S.W. MO-150 HWY
LEE'S SUMMIT, MO 64802

CONSTR. DOC. & REVISIONS

No.	Description	Date
-	Owner Review	05/12/20
1	ADD 1	03/09/20

CASCO DIVERSIFIED CORPORATION
ARCHITECTURAL
CERTIFICATE OF AUTHORITY
#000329 12/31/21

STATE OF MISSOURI
KEYMA L. BULLOCK
NUMBER A-2004011669
ARCHITECT

PROFESSIONAL OF RECORD
BULLOCK, KEYMA L.
License NO. 2004011669
Expiration Date 12/31/20

Drawn By/Checked By: RMT/MSD
Project Number 320488
Permit Date 06-17-20

DRIVE THRU DETAILS

A504A

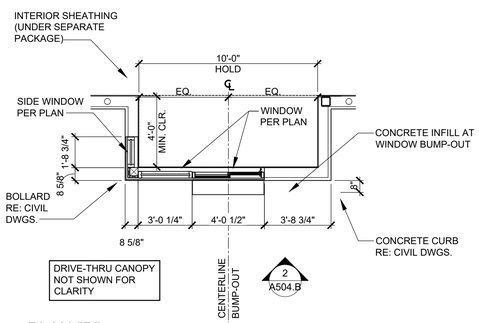

PLAN "B"

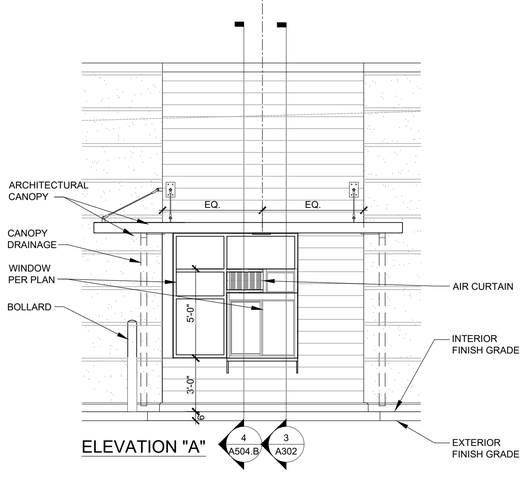

ELEVATION "A"

1 A504.B DRIVE-THRU WINDOW DETAILS

SCALE: 1/4" = 1'-0"

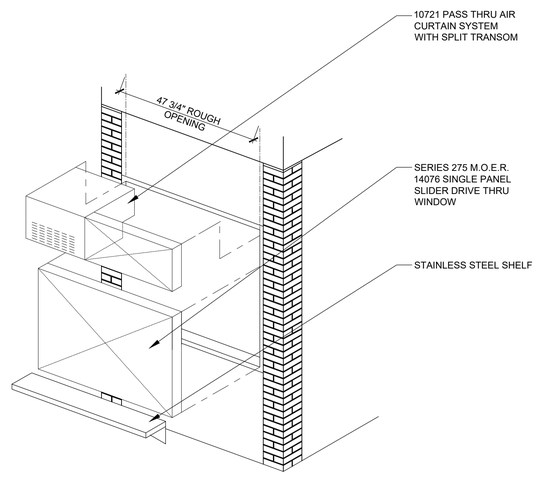

2 A504.B DRIVE-THRU WINDOW

SCALE: 3/4" = 1'-0"

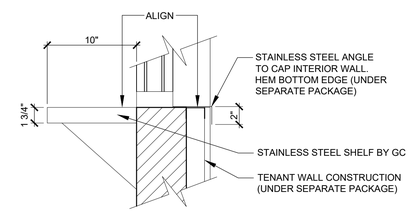

3 A504.B DRIVE-THRU SHELF

SCALE: 1-1/2" = 1'-0"

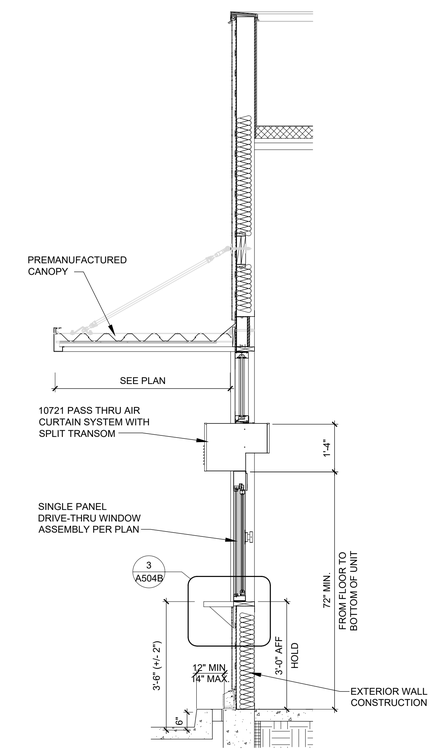

4 A504.B DRIVE-THRU WINDOW

SCALE: 1/2" = 1'-0"

RELEASE FOR
CONSTRUCTION
AS NOTED ON PLANS REVIEW
DEVELOPMENT SERVICES
LEE'S SUMMIT, MISSOURI
BY
06/17/2020

CASCO
12 Summit Drive, Suite 100, St. Louis, MO 63143 T: 314

MIDLAND
GENERAL CONTRACTORS INCORPORATED

Starbucks & Medical Office

155 S.W. MO-150 HWY
LEE'S SUMMIT, MO 64802

CONSTR. DOC. & REVISIONS

No.	Description	Date
	-Owner Review	05/12/20

CASCO DIVERSIFIED CORPORATION
ARCHITECTURAL
CERTIFICATE OF AUTHORITY
#000329 12/31/21

STATE OF MISSOURI
KEYMA L. BULLOCK
NUMBER
A-2004011669
ARCHITECT

PROFESSIONAL OF RECORD
BULLOCK, KEYMA L.
License NO. 2004011669
Expiration Date 12/31/20

Drawn By/Checked By:	RMT/ALS
Project Number	320488
Permit Date	06-17-20

DRIVE THRU DETAILS

A504B

THIS DETAIL IS FOR REFERENCE ONLY. SIGNAGE SUPPLIED AND INSTALLED BY SIGN VENDOR UNDER SEPARATE PERMIT. SITE WORK INCLUDES FOOTINGS, CONCRETE, REINFORCING, ANCHOR BOLTS AND CONDUIT.

NOTES:
1. FOOTING DEPTH MAY VARY AS PER SITE AND SOIL CONDITIONS.
2. CONCRETE RESISTANCE 3600 PSI AFTER 28 DAYS.
3. THE GROUND MUST NOT BE ALTERED AND MUST BE WELL DRAINED.
4. EXPECTED GROUND BEARING CAPACITY AT 3000 PSF.

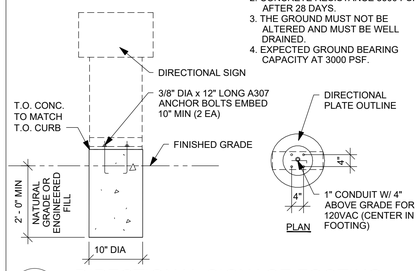

1 A505 DIRECTIONAL SIGNAGE FOOTING

SCALE: 1/2" = 1'-0"

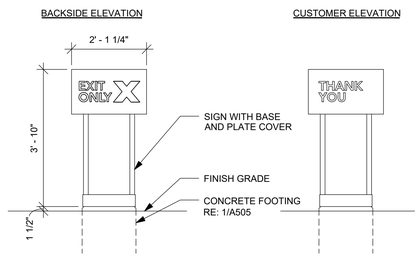

2 A505 DTE - DIRECTIONAL SIGN (EXIT)

SCALE: 1/2" = 1'-0"

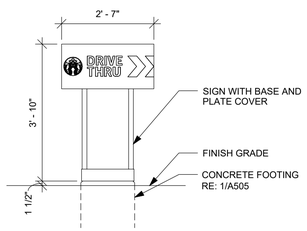

3 A505 DTE - DIRECTIONAL SIGN WITH (ENTRY)

SCALE: 1/2" = 1'-0"

4 A505 NOT USED

SCALE: 1/2" = 1'-0"

SIGNAGE SUPPLIED AND INSTALLED UNDER SEPARATE PERMIT. SITE WORK INCLUDES FOOTINGS, CONCRETE, REINFORCING, ANCHOR BOLTS AND CONDUIT.

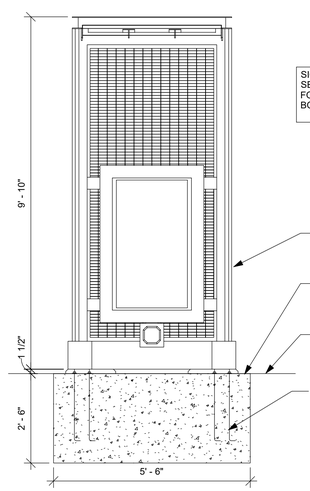

FRONT ELEVATION

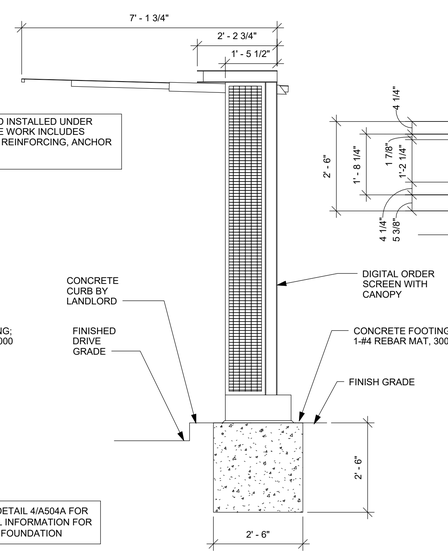

RIGHT ELEVATION

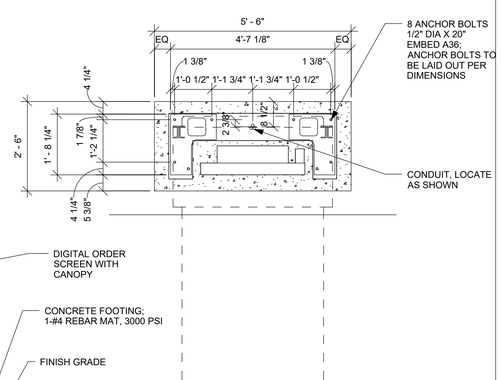

PLAN

REFER TO DETAIL 4/A504A FOR ADDITIONAL INFORMATION FOR CONCRETE FOUNDATION

5 A505 DTE - DIGITAL ORDER SCREEN WITH CANOPY

SCALE: 1/2" = 1'-0"

RELEASE FOR CONSTRUCTION
AS NOTED ON PLANS REVIEW
DEVELOPMENT SERVICES
LEE'S SUMMIT, MISSOURI
06/17/2020

CASCO
12 Sunnen Drive, Suite 100, St. Louis, MO 63143 T: 314.781.2777

MIDLAND
GENERAL CONTRACTORS INCORPORATED

Starbucks & Medical Office

155 S.W. MO-150 HWY
LEE'S SUMMIT, MO 64802

CONSTR. DOC. & REVISIONS

No.	Description	Date
	Owner Review	05/12/20

CASCO DIVERSIFIED CORPORATION
ARCHITECTURAL
CERTIFICATE OF AUTHORITY
#000329 12/31/21

STATE OF MISSOURI
KEYMA L. BULLOCK
NUMBER A-2004011669
ARCHITECT

PROFESSIONAL OF RECORD
BULLOCK, KEYMA L.
License NO. 2004011669
Expiration Date 12/31/20

Drawn By/Checked By:	RMT/MSD
Project Number	320488
Permit Date	06-17-20

SITE DETAILS

A505

SCREEN TO HAVE NO VISIBILITY THROUGH SLATS
PAINT FENCE SW7069 EXTERIOR ENAMEL ES

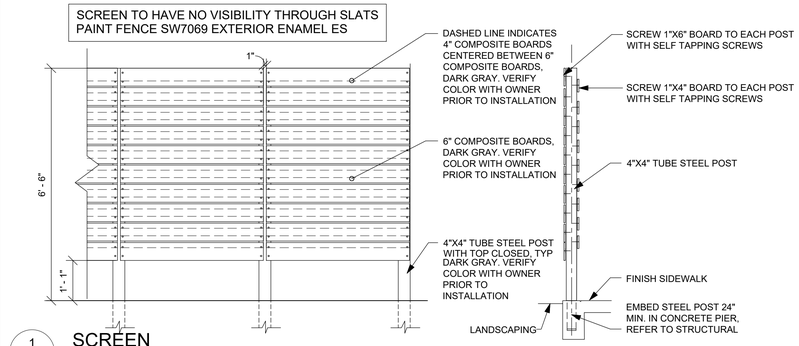

1 A506 **SCREEN**
SCALE: 1/2" = 1'-0"

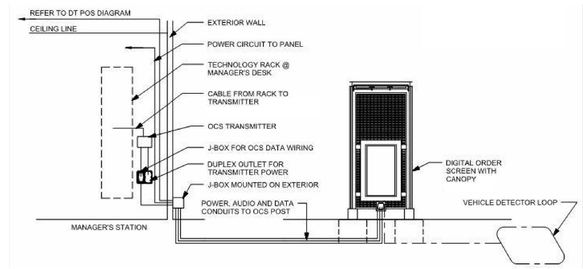

2 A506 **DRIVE-THRU COMMUNICATION SYSTEM**
SCALE: 3/4" = 1'-0"

DRIVE THRU COMMUNICATION COMPONENTS
WINDOW POS STATION - WIRELESS BASE STATION, MANUAL INTERCOM AND CCTV MONITOR. PROVIDE POWER, J-BOXES AND CONDUIT TO MANAGER'S WORKSTATION.
MANAGER'S WORKSTATION - OCS TRANSMITTER ADJACENT TO EQUIPMENT RACK. PROVIDE POWER AND J-BOX FOR DATA TO OCS POST. CONNECTION OF OCS TRANSMITTER TO RACK BY POS VENDOR.
ORDER CONFIRMATION POST - PROVIDE (3) 1" PVC CONDUITS (ELECTRICAL, AUDIO & DATA) FROM MAIN BUILDING TO POST, (1) ELECTRICAL CONDUIT TO MENU BOARD AND (1) CONDUIT TO VEHICLE DETECTION LOOP.
VEHICLE DETECTOR LOOP - CENTER ON ORDER CONFIRMATION POST. INSTALL PRIOR TO FINAL SURFACING (PROTECT FROM DAMAGE DURING PAVING), OR PLACE IN SAWCUT -2" BELOW FINAL GRADE AND FILL KERF WITH APPROVED SEALER
DRIVE THRU SPEAKER POST TO BE DIRECTLY SHIPPED TO SITE BY VENDOR

DRIVE THRU POS STATION COMPONENTS
STANDARD POS
REGISTER, CHECK VALIDATION PRINTER, TWO UNDERCOUNTER CASH DRAWERS/SAFES, AND STANDARD POWER, DATA AND PHONE RECEPTACLES.
'EXPEDITOR' POS
REGISTER ONLY, REQUIRING SEPARATE DATA CABLE, JACK AND CONDUIT TO MANAGER'S WORKSTATION.
THREE ORDER DISPLAY MONITORS
THE FIRST TO BE LOCATED AT THE DRIVE THRU WINDOW, THE SECOND TO BE PLACED ABOVE THE BARISTA'S ESPRESSO MACHINE AND THE THIRD OVER THE WINDOW POS. EACH REQUIRE POWER AND A DEDICATED J-BOX & CONDUIT RUN, ROUTED TO MANAGERS WORK STATION

3 A506 **NOT USED**
SCALE: N.T.S.

4 A506 **NOT USED**
SCALE: N.T.S.

5 A506 **NOT USED**
SCALE: N.T.S.

ORNAMENTAL METAL FENCE NOTES

1. ALL FOOTINGS SHALL BE 2000 PSI CONCRETE
2. 2-1/2" STEEL POST 6'-0" O.C. MAX
3. 4'-0" HIGH AT INTERIOR PLAY AREAS.
4. ALL FENCING COMPONENTS SHALL BE BLACK ACRYLIC COATED.
5. ALL WELDS SHALL BE CONTINUOUS 1/8" FILLET, GROUND SMOOTH
6. POST SIZE DEPENDS ON FENCE HEIGHT, WEIGHT AND WIND LOADS. (SIZE PER MANUFACTURER SPECIFICATIONS)
7. ALL BOLTS SHALL BE CUT OFF FLUSH WITH NUTS.

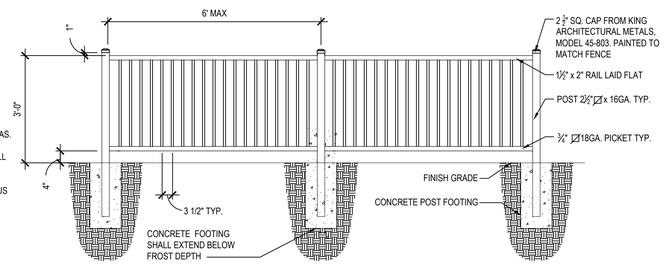

6 A506 **DECORATIVE METAL RAILING DETAIL**
SCALE: 1/2" = 1'-0"

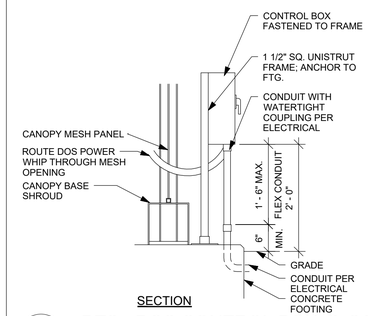

SECTION

7 A506 **DTS - DOS CONTROL BOX @ CANOPY**
SCALE: 3/4" = 1'-0"

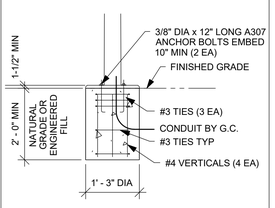

8 A506 **DETAIL**
SCALE: N.T.S.

9 A506 **NOT USED**
SCALE: N.T.S.

10 A506 **NOT USED**
SCALE: N.T.S.

11 A506 **NOT USED**
SCALE:

12 A506 **NOT USED**
SCALE:

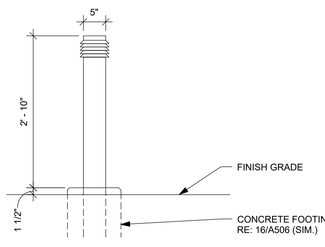

DETAIL A

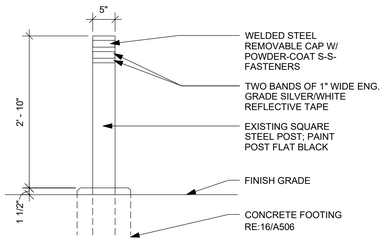

DETAIL B

BOLLARD ILLUMINATED/ NON-ILLUMINATED SQUARE				
ALL DESIGN, OPERATIVE AND PROCESS DATA PERTAINING TO THE ARTICLE SHOWN ON THIS SHEET IS THE PROPERTY OF DSA PHOTOTECH. IT IS DISCLOSED IN CONFIDENCE AND IS NOT TO BE COPIED, REPRODUCED, REVEALED TO, OR APPROPRIATED BY OTHERS, IN PART OR IN WHOLE, WITHOUT THE EXPRESS CONSENT OF DSA PHOTOTECH. THIS PRINT IS LOANED AND MUST NOT BE USED IN ANY MANNER DETRIMENTAL TO THE INTEREST OF DSA PHOTOTECH.	DSA	DSA/PHOTOTECH 16961 Central Avenue, Carson, CA 90746 (310) 537-5000 (310) 537-7060 Fax phubbell@dsaphototech.com LIGHTED BOLLARD		
PAH	DATE 02/13/14	CQSBEBOLLLI	SCALE 1 : 8	SHT 1 / 1

13 A506 **ILLUMINATED/ NON-ILLUMINATED BOLLARD**
SCALE: 3/4" = 1'-0"

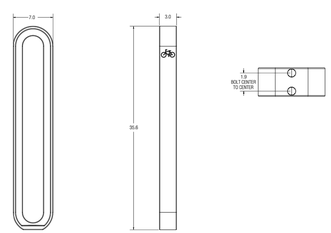

NOTES:
1. INSTALL RACK IN DIRECTION AND LOCATION AS SHOWN ON PLAN.
2. INSTALL WITH IG (IN-GROUND) MOUNT PER MANUFACTURER'S RECOMMENDATIONS.
3. BLACK COLOR POWDERCOAT.

UNLESS OTHERWISE SPECIFIED, DIMENSIONS ARE IN INCHES TOLERANCES (UNLESS OTHERWISE SPECIFIED) FRACTIONAL ±1/32 ANGULAR/BEND ±1° TWO PLACE DECIMAL ±.030 THREE PLACE DECIMAL ±.020	FORMS+SURFACES® 30 Pine Street, Pittsburgh, PA 15223 Tel (800) 451-0410 Fax (412) 781-7840		
		DATE 01/01/2011	OLYMPIA BIKE RACK SKOLY
MATERIAL: SEE DATA SHEET			
FINISH: SEE DATA SHEET	DO NOT SCALE DRAWING		
WEIGHT: 22 LBS	PROPRIETARY AND CONFIDENTIAL		
SOURCE: -	THE INFORMATION CONTAINED IN THIS DRAWING IS THE SOLE PROPERTY OF FORMS + SURFACES . ANY REPRODUCTION IN PART OR AS A WHOLE WITHOUT THE WRITTEN PERMISSION IS PROHIBITED.	SIZE B / DWG. NO. SKOLY-CS / REV 0 / SHEET 1 OF 1	
SCALE: N.T.S.			

14 A506 **BIKE RACK**
SCALE: N.T.S.

15 A506 **NOT USED**
SCALE: N.T.S.

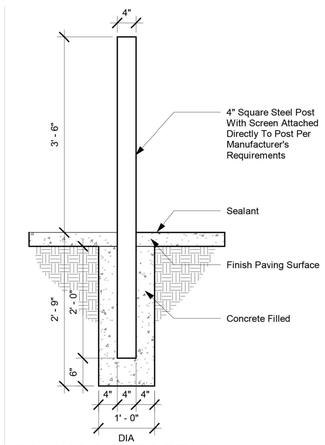

16 A506 **RAILING POST DETAIL**
SCALE: 3/8" = 1'-0"

RELEASE FOR CONSTRUCTION
AS NOTED ON PLANS REVIEW
DEVELOPMENT SERVICES
LEE'S SUMMIT, MISSOURI
05/17/2020

CASCO
12 Sumner Drive, Suite 100, St. Louis, MO 63143 T: 314

MIDLAND GENERAL CONTRACTORS INCORPORATED

Starbucks & Medical Office
155 S.W. MO-150 HWY
LEE'S SUMMIT, MO 64802

CONSTR. DOC. & REVISIONS

No.	Description	Date
	Owner Review	05/12/20

CASCO DIVERSIFIED CORPORATION
ARCHITECTURAL
CERTIFICATE OF AUTHORITY
#000329 12/31/21

STATE OF MISSOURI
KEYMA L. BULLOCK
NUMBER A-2004011669
ARCHITECT

PROFESSIONAL OF RECORD
BULLOCK, KEYMA L.
License NO. 2004011669
Expiration Date 12/31/20

Drawn By/Checked By:	RMT/MSD
Project Number	320488
Permit Date	06-17-20

SITE DETAILS

A506

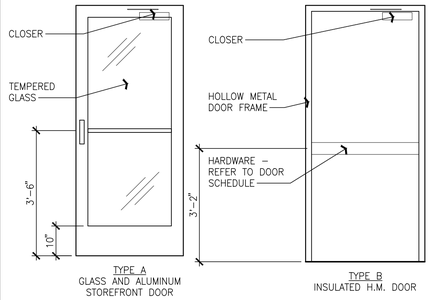

8 A601 DOOR TYPES
SCALE: 1/2" = 1'-0"

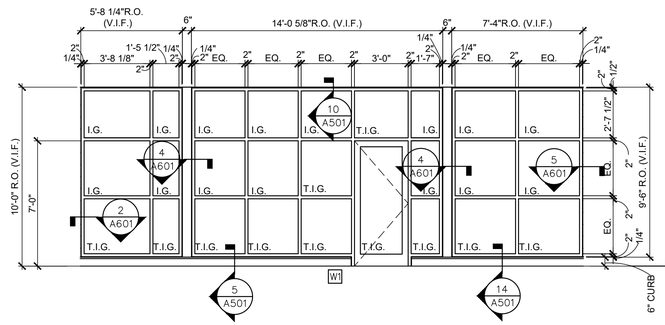

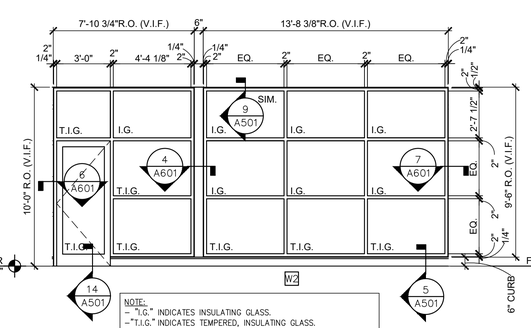

NOTE:
– "I.G." INDICATES INSULATING GLASS.
– "T.I.G." INDICATES TEMPERED, INSULATING GLASS.
– "I.S." INDICATES INSULATING SPANDREL GLASS. (GUARDIAN DECO–HT "WARM GREY ON 4th SURFACE)
– STOREFRONT TO BE BLACK #29, KAWNEER TRIFAB VC451T OR APPROVED EQUAL.

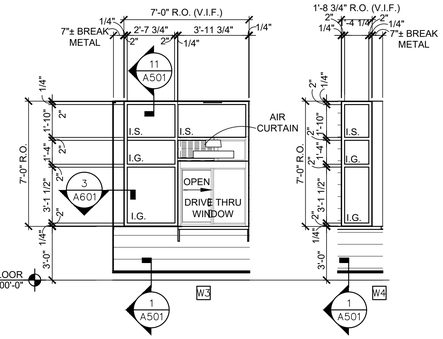

9 A601 WINDOW TYPES
SCALE: 1/4" = 1'-0"

HARDWARE SETS:

SET NO. 1 SINGLE ALUMINUM MAIN ENTRY/EXIT

ALL FINISHES TO MATCH DOOR

NO.	ITEM	DESCRIPTION	MANUFACTURER	FINISH
3	HANGING DEVICES	TH2314/MPB91	McKINNEY	630
1	SECURING DEVICES	MS1850S DEADBOLT	ADAMS RITE	626
1	EXIT INDICATOR	4089 EXIT INDICATOR W/HEADER SIGN: "THIS DOOR MUST REMAIN UNLOCKED WHEN BUILDING IS OCCUPIED."	ADAMS RITE	626
2	SECURING DEVICES	KB609-2 CUT CONTROL KEY "A" KEYWAY	FALCON LOCK	626
1	SECURING DEVICES	KB609-2 CUT CONTROL KEY "A" KEYWAY	FALCON LOCK	-----
9	SECURING DEVICES	KB632-2 CUT USER KEY "A" KEYWAY	FALCON LOCK	-----
2	SECURING DEVICES	C987 7-PIN MORTISE CYLINDER HOUSING W/AR CAM	FALCON LOCK	626
2	SECURING DEVICES	A08794-003 ADJUSTABLE RING, MORTISE CYL. 5/16-13/32	FALCON LOCK	622
1	OPERATING TRIM	108 DOOR PULL HANDLE	ROCKWOOD	630
1	OPERATING TRIM	48 PUSH BAR X 31	ROCKWOOD	630
1	CLOSING DEVICES	8916 DOOR CLOSER 8916 AF89P	DORMA	689
1	STOPS AND HOLDERS	473 DOOR STOP W/HOOK	ROCKWOOD	626
1	THRESHOLD	325 HALF SADDLE THRESHOLD (H.C. APPROVED)	NATIONAL GUARD	-----

SET NO. 2 SERVICE DOOR, EXTERIOR (42" WIDE DOOR)

NO.	ITEM	DESCRIPTION	MANUFACTURER	FINISH
3	HANGING DEVICES	TH2314/MPB91	McKINNEY	630
1	SECURING DEVICES	C607 7-PIN CORE COMBINATED "A" KEYWAY	FALCON LOCK	626
1	SECURING DEVICES	I/O 2000L-031C AUTO LOCKING DOOR ALARM, IC; NO CTR INCLUDES MORTISE CYLINDER	SUR-LOCK	-----
1	CLOSING DEVICES	8916 DOOR CLOSER 8916 AF89P	DORMA	689
1	PROTECTIVE TRIM UNITS	K1050 B4E KICKPLATE 10 X 40	ROCKWOOD	630
1	ACCESSORIES	16A RAIN DRIP 46"	NATIONAL GUARD	A
1	ACCESSORIES	137NA WEATHER STRIP 17.5' 42 X 84	NATIONAL GUARD	A
1	ACCESSORIES	C607A DOOR SWEEP 42"	NATIONAL GUARD	A
1	MISCELLANEOUS ITEMS	DS-6 DOOR SPY	SECURITY PRODUCTS	SILVER
1	MISCELLANEOUS ITEMS	MCV309NWHGL DOOR BELL	NUTONE	AS SELECTED
1	STOPS AND HOLDERS	473 DOOR STOP W/HOOK	ROCKWOOD	626
1	THRESHOLD	325 HALF SADDLE THRESHOLD (H.C. APPROVED)	NATIONAL GUARD	----

SET NO. 3 EXIT DOOR, EXTERIOR (36" WIDE DOOR)

NO.	ITEM	DESCRIPTION	MANUFACTURER	FINISH
3	HANGING DEVICES	TH2314/MPB91	McKINNEY	630
1	SECURING DEVICES	C607 7-PIN CORE COMBINATED "A" KEYWAY	FALCON LOCK	626
1	SECURING DEVICES	I/O 2000L-031C AUTO LOCKING DOOR ALARM, IC; NO CTR INCLUDES MORTISE CYLINDER	SUR-LOCK	-----
1	CLOSING DEVICES	8916 DOOR CLOSER 8916 AF89P	DORMA	689
1	PROTECTIVE TRIM UNITS	K1050 B4E KICKPLATE 10 X 34	ROCKWOOD	630
1	ACCESSORIES	16A RAIN DRIP 40"	NATIONAL GUARD	A
1	ACCESSORIES	137NA WEATHER STRIP 17" 36 X 84	NATIONAL GUARD	A
1	ACCESSORIES	C607A DOOR SWEEP 36"	NATIONAL GUARD	A
1	MISCELLANEOUS ITEMS	DS-6 DOOR SPY	SECURITY PRODUCTS	SILVER
1	STOPS AND HOLDERS	473 DOOR STOP W/HOOK	ROCKWOOD	626
1	THRESHOLD	325 HALF SADDLE THRESHOLD (H.C. APPROVED)	NATIONAL GUARD	----

STARBUCKS SHELL DOOR SCHEDULE

MK	DESCRIPTION	DOOR SIZE (W x H x D)	DOOR TYPE	DOOR MATERIAL	HARDWARE TYPE	FRAME MATERIAL	FRAME FINISH	DETAILS HEAD	DETAILS JAMB	REMARKS
01	STOREFRONT ENTRY	3'–0" X 7'–0" X 1 3/4"	A	ALUM.	01	ALUM.	BLACK	–	–	REFER TO DETAIL 1/A601 FOR SIGNAGE
03	EXTERIOR ACCESS	3'–6" X 7'–0" X 1 3/4"	B	H.M. (PAINTED)	02	H.M.	PAINT	3/A501	7/A501	REFER TO DETAIL 1/A601 FOR SIGNAGE
06	EXTERIOR ACCESS	3'–0" X 7'–0" X 1 3/4"	B	H.M. (PAINTED)	03	H.M.	PAINT	3/A501	7/A501	REFER TO DETAIL 1/A601 FOR SIGNAGE

LANDLORD UTILITY AND FUTURE MEDICAL OFFICE SHELL DOOR SCHEDULE

MK	DESCRIPTION	DOOR SIZE (W x H x D)	DOOR TYPE	DOOR MATERIAL	HARDWARE TYPE	FRAME MATERIAL	FRAME FINISH	DETAILS HEAD	DETAILS JAMB	REMARKS
02	STOREFRONT ENTRY	3'–0" X 7'–0" X 1 3/4"	A	ALUM.	ENTRY FUNCTION W/ EMERGENCY EGRESS HARDWARE	ALUM.	BLACK	–	–	DOOR CLOSER TO BE INSTALLED. REFER TO DETAIL 1/A601 FOR SIGNAGE
04	EXTERIOR ACCESS	3'–0" X 7'–0" X 1 3/4"	B	H.M. (PAINTED)	KEYED EXIT W/ EMERGENCY EGRESS HARDWARE	H.M.	PAINT	3/A501	7/A501	DOOR CLOSER TO BE INSTALLED. REFER TO DETAIL 1/A601 FOR SIGNAGE
05	LL ROOM EXTERIOR ACCESS	3'–0" X 7'–0" X 1 3/4"	B	H.M. (PAINTED)	KEYED EXIT	H.M.	PAINT	3/A501	7/A501	---

NOTES:
1. ALL DOORS SHALL BE SHOP PREPARED FOR HARDWARE.
2. ALL EXTERIOR DOORS TO BE KEYED ALIKE. CONTRACTOR TO FIELD VERIFY.
3. ENTRANCE DOORS TO BE BLACK KAWNEER #29 ENTRANCE DOOR OR APPROVED EQUAL.
4. HARDWARE FOR ALL DOORS SHOULD BE LEVER PROFILE OR SIMILAR AND SHOULD NOT REQUIRE TIGHT GRASPING, PINCHING, OR TWISTING OF THE WRIST TO OPERATE.

GENERAL CONTRACTOR NOTE:

BLACK ALUMINUM MAY HAVE A LONG LEAD TIME. ALLOW ADDITIONAL TIME IN ORDERING TO MEET THE PROJECT SCHEDULE

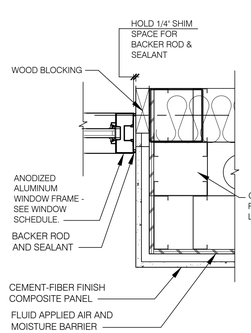

5 A601 DETAIL
SCALE: 1–1/2" = 1'–0"

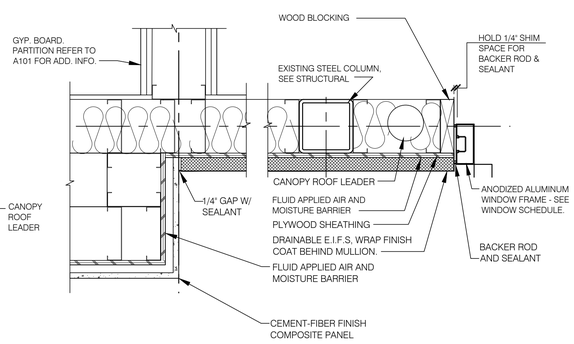

6 A601 DETAIL
SCALE: 1–1/2" = 1'–0"

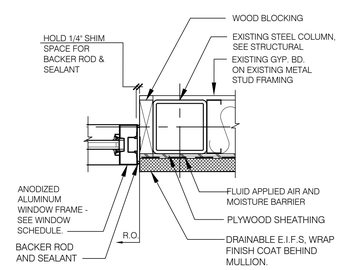

7 A601 DETAIL
SCALE: 1–1/2" = 1'–0"

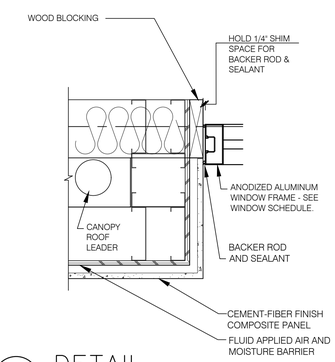

2 A601 DETAIL
SCALE: 1–1/2" = 1'–0"

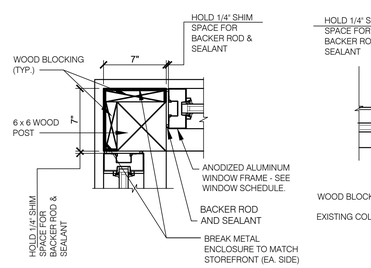

3 A601 DETAIL
SCALE: 1–1/2" = 1'–0"

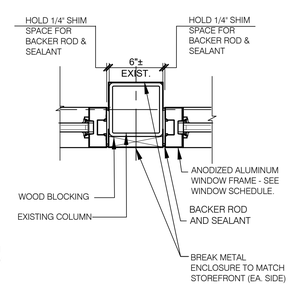

4 A601 DETAIL
SCALE: 1–1/2" = 1'–0"

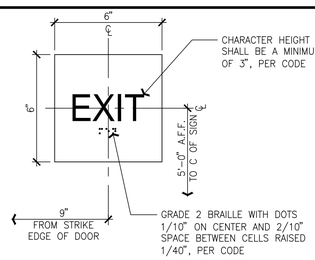

TACTILE EXIT SIGNS SHALL BE INSTALLED AT:
1. EACH GRADE LEVEL EXIT.
2. EACH EXIT ACCESS DOOR FROM AN INTERIOR ROOM THAT LEADS TO A CORRIDOR OR HALLWAY AND IS DESIGNATED AS AN "EXIT ROUTE".
3. EACH EXIT DOOR THROUGH A HORIZONTAL EXIT SHALL BE DESIGNATED WITH THE WORDS "TO EXIT".
4. SIGNS TO BE INSTALLED ON THE LATCH SIDE OF THE DOOR, OR IF PROVIDED AT DOUBLE DOORS, INSTALL ON THE RIGHT. WHERE NO WALL SPACE IS AVAILABLE, SIGNS SHALL BE LOCATED ON THE NEAREST ADJACENT WALL.

EXIT SIGNS SHALL MEET THE FOLLOWING CRITERIA:
1. CHARACTERS SHALL BE UPPERCASE.
2. CHARACTERS AND THEIR BACKGROUND SHALL HAVE A NON–GLARE FINISH. CHARACTERS SHALL CONTRAST WITH THEIR BACKGROUND.
3. SIGNS SHALL CONFORM TO ANSI OR LOCAL ACCESSIBILITY GUIDELINES WHICHEVER IS MORE STRINGENT.

1 A601 TACTILE EXIT SIGNAGE
SCALE: 3" = 1'–0"

RELEASE FOR CONSTRUCTION
AS NOTED ON PLANS REVIEW
DEVELOPMENT SERVICES
LEE'S SUMMIT, MISSOURI
06/17/2020

CASCO
12 Summit Drive, Suite 100, St. Louis, MO 63141 T: 314.822.1111

MIDLAND GENERAL CONTRACTORS INCORPORATED

Starbucks & Medical Office
155 S.W. MO-150 HWY
LEE'S SUMMIT, MO 64802

No.	Description	Date
	Gwner Review	05/12/20

CONSTR. DOC. & REVISIONS

CASCO DIVERSIFIED CORPORATION
ARCHITECTURAL
CERTIFICATE OF AUTHORITY
#000329 12/31/21

STATE OF MISSOURI
KEYMA L. BULLOCK
NUMBER
A-2004011669
ARCHITECT

PROFESSIONAL OF RECORD
BULLOCK, KEYMA L.
License NO. 2004011669
Expiration Date 12/31/20

Drawn By/Checked By:	MS/JVR
Project Number	320488
Permit Date	06-17-20

WINDOW AND DOOR SCHEDULES

A601

GENERAL NOTES:

DESIGN:

BUILDING CODE - 2018 INTERNATIONAL BUILDING CODE

1. EXISTING ROOF DEAD LOAD = 20 PSF
   MINIMUM ROOF LIVE LOAD
   - TRIBUTARY AREA 0 TO 200 SQ. FT. = 20 PSF
   - TRIBUTARY AREA 201 TO 600 SQ. FT. = 20(1.2-0.001At) PSF
   - TRIBUTARY AREA OVER 600 SQ. FT. = 12 PSF

2. SNOW LOADS:
   - GROUND SNOW LOAD, Pg = 20 PSF
   - MINUMUM ROOF SNOW LOAD = 20 PSF
   - SNOW EXPOSURE FACTOR, Ce = 1.0
   - SNOW LOAD IMPORTANCE FACTOR, I = 1.0
   - THERMAL FACTOR, Ct = 1.0

3. WIND LOADS:
   - ULTIMATE DESIGN WIND SPEED (3 SECOND GUST) = 109 MPH
   - RISK CATEGORY = II
   - BUILDING CATEGORY = ENCLOSED, SIMPLE DIAPHRAGM
   - OVERALL EXPOSURE CATEGORY = C
   - HEIGHT AND EXPOSURE ADJUSTMENT COEFFICIENT = 1.28

4. SEISMIC:
   - RISK CATEGORY = II
   - SEISMIC IMPORTANCE FACTOR, Ie = 1.00
   - MAPPED SPECTRAL RESPONSE COEFFICIENTS
     - Ss = 0.100
     - S1 = 0.068
   - SITE CLASS = D (ASSUMED)
   - SPECTRAL RESPONSE COEFFICIENTS
     - SDS = 0.107
     - SD1 = 0.011
   - SEISMIC DESIGN CATEGORY = B

CONCRETE:

1. ALL CONCRETE SHALL BE NORMAL-WEIGHT (DENSITY=145 PCF) AND SHALL HAVE A 28-DAY COMPRESSIVE STRENGTH IN ACCORDANCE WITH THE FOLLOWING:
   - ALL FOUNDATIONS, INTERIOR SLAB 3000psi
   - EXTERIOR SLABS, CURBS, SIDEWALKS 4000psi
   - ALL OTHER CONCRETE (U.N.O.) 3000psi

2. THE SLUMP OF ALL CONCRETE SHALL NOT EXCEED 4" UNLESS A HIGH RANGE WATER-REDUCING ADMIXTURE IS USED. THE SLUMP OF CONCRETE PRIOR TO ADDITION OF A HIGH-RANGE WATER-REDUCING ADMIXTURE SHALL NOT EXCEED 4". THE SLUMP OF CONCRETE CONTAINING A HIGH RANGE WATER-REDUCING ADMIXTURE SHALL NOT EXCEED 10".

3. ALL EXTERIOR CONCRETE SHALL BE AIR-ENTRAINED WITH BETWEEN 4% AND 8%, AIR CONTENT.

4. THE COARSE AGGREGATE SIZE SHALL BE #57 OR LARGER.

5. THE MINIMUM PORTLAND CEMENT CONTENT (ASTM C150 TYPE I OR II) OF ALL CONCRETE SHALL CONFORM TO THE FOLLOWING TABLE (FLY ASH NOT PERMITTED):

SPECIFIED COMPRESSIVE SRENGTH (psi)	NON AIR-ENTRAINED CONCRETE (lbs.)	AIR-ENTRAINED CONCRETE (lbs.)
3000	470	517
4000	564	611

6. THE CONTRACTOR SHALL SUBMIT CONCRETE MIX DESIGNS FOR REVIEW A MINIMUM OF ONE WEEK PRIOR TO THE PLACEMENT OF ANY CONCRETE. THE CONCRETE MIX DESIGNS SHALL INCLUDE ALL STRENGTH DATA NECESSARY TO SHOW COMPLIANCE WITH THE PROJECT SPECIFICATIONS FOR EITHER THE TRIAL BATCH OR FIELD EXPERIENCE METHOD.

7. CONCRETE REINFORCING STEEL SHALL CONFORM TO ASTM A615, GRADE 60, UNLESS NOTED OTHERWISE.

8. CONCRETE REINFORCING STEEL TO BE WELDED SHALL CONFORM TO ASTM A706.

9. WELDED WIRE FABRIC SHALL CONFORM TO ASTM A185.

10. ALL REINFORCING SHALL BE DETAILED, FABRICATED, AND PLACED IN ACCORDANCE WITH THE LATEST EDITION OF THE AMERICAN CONCRETE INSTITUTE DETAILING MANUAL.

11. ALL REINFORCING SHALL BE SUPPORTED IN FORMS, SPACED WITH NECESSARY ACCESSORIES AND SHALL BE SECURELY WIRED TOGETHER, IN ACCORDANCE WITH THE LATEST EDITION OF THE CRSI "MANUAL OF STANDARD PRACTICE".

12. THE MINIMUM CONCRETE CLEAR COVER OVER REINFORCING STEEL, UNLESS NOTED OTHERWISE, SHALL BE:
    - UNFORMED SURFACE IN CONTACT WITH THE GROUND 3 IN.
    - FORMED SURFACES EXPOSED TO EARTH OR WEATHER:
      - #5 BARS AND SMALLER 1 1/2 IN.
    - SLABS, WALLS, AND JOISTS:
      - #11 BARS AND SMALLER 3/4 IN.

13. ALL BASE PLATES, ANCHOR BOLTS, SUPPORT ANGLES, ETC., WHICH ARE BELOW GRADE SHALL BE COVERED WITH A MINIMUM OF 3" OF CONCRETE.

14. ALL LAP SPLICES SHALL BE IN ACCORDANCE WITH THAT SHOWN ON THE DRAWINGS.

SUBGRADE PREPARATION NOTE

1. ALL EXPOSED AND/OR DISTURBED GRANULAR BASE AREAS SHALL BE COMPACTED TO A MINIMUM OF 95% OF OPTIMUM DENSITY IN ACCORDANCE W/ASTM D 1557 AT OPTIMUM MOISTURE CONTENT AND TO A MINIMUM DEPTH OF 8" - ALL SUBGRADE SOIL AREAS EXPOSED BY EXCAVATIONS AND GRADING SHALL BE COMPACTED TO A MINIMUM OF 95% OF OPTIMUM DENSITY IN ACCORDANCE W/ASTM D 1557 AT OPTIMUM MOISTURE CONTENT AND TO A MINIMUM DEPTH OF 12" - FILL WHERE REQUIRED SHALL BE PLACED IN LIFTS NOT TO EXCEED 8" LOOSE MEASURE AND SHALL BE COMPACTED AS OUTLINED ABOVE - THE ON SITE TESTING COMPANY SHALL PROVIDE TESTING AND INSPECTION OF THE SOIL WORK PRIOR TO PLACING CONCRETE

STRUCTURAL STEEL:

1. STEEL SHALL CONFORM TO THE FOLLOWING GRADES:
   - WIDE FLANGE SHAPES A992 OR A572 GR. 50 (Fy = 50)
   - CHANNELS, ANGLES, PLATES, ETC. (UNO) A36 (Fy = 36)
   - STRUCTURAL TUBE A500 (Fy=46)
   - STEEL PIPE A53 (Fy=35)
   - THREADED RODS F1554, A36 OR A307
   - BOLTS A325
   - WELDING ELECTRODES E70XX

2. ALL STRUCTURAL STEEL SHALL BE DETAILED, FABRICATED AND ERECTED IN ACCORDANCE WITH THE AISC CODE OF STANDARD PRACTICE (360-05), EXCEPT AS MODIFIED IN THESE NOTES AND THE PROJECT SPECIFICATIONS.

3. ALL STRUCTURAL STEEL TO HAVE A SHOP GRADE PRIMER UNLESS NOTED OTHERWISE.

MISCELLANEOUS:

1. NO CHANGE IN SIZE OR DIMENSION OF STRUCTURAL MEMBERS SHALL BE MADE WITHOUT THE WRITTEN APPROVAL OF THE PROFESSIONAL OF RECORD.

2. STRUCTURAL DRAWINGS ARE INTENDED TO BE USED WITH ARCHITECTURAL AND MECHANICAL DRAWINGS. CONTRACTOR IS RESPONSIBLE FOR COORDINATING SUCH REQUIREMENTS INTO THEIR SHOP DRAWINGS AND WORK.

3. NO OPENINGS SHALL BE MADE IN ANY STRUCTURAL MEMBER WITHOUT THE WRITTEN APPROVAL OF THE PROFESSIONAL OF RECORD.

4. DO NOT SCALE THESE DRAWINGS, USE DIMENSIONS.

5. THE CONTRACTOR SHALL INFORM THE PROFESSIONAL OF RECORD IN WRITING OF ANY DEVIATION FROM THE CONTRACT DOCUMENTS. THE CONTRACTOR SHALL NOT BE RELIEVED OF THE RESPONSIBILITY OF SUCH DEVIATION BY THE PROFESSIONAL OF RECORD REVIEW OF SHOP DRAWINGS, PRODUCT DATA, ETC., UNLESS THE CONTRACTOR HAS SPECIFICALLY INFORMED THE PROFESSIONAL OF RECORD OF SUCH DEVIATION AT THE TIME OF SUBMISSION, AND THE PROFESSIONAL OF RECORD HAS GIVEN WRITTEN APPROVAL TO THE SPECIFIC DEVIATION.

6. ANY DETAIL TITLED AS A TYPICAL DETAIL IS APPLICABLE THROUGHOUT THE DESIGN DRAWINGS. THESE DETAILS ARE DEFINED AS GENERAL STANDARDS THAT ARE USUALLY NOT IDENTIFIED BY SPECIFIC REFERENCE WITHIN THE DRAWINGS. THESE DETAILS MAY BE MODIFIED OR SUPERSEDED BY SPECIFIC DETAILS THAT ARE REFERENCED WITHIN THE DRAWINGS.

7. THE CONTRACTOR IS RESPONSIBLE FOR LIMITING THE AMOUNT OF CONSTRUCTION LOAD IMPOSED UPON THE STRUCTURAL FRAMING. CONSTRUCTION LOADS SHALL NOT EXCEED THE DESIGN CAPACITY OF THE FRAMING AT THE TIME THE LOADS ARE IMPOSED.

EXISTING CONSTRUCTION:

1. WORK SHOWN IS NEW UNLESS INDICATED AS EXISTING.

2. EXISTING CONSTRUCTION SHOWN IS BASED UPON ASSUMED EXISTING CONDITIONS AND CAN BE USED FOR BIDDING PURPOSES. THE CONTRACTOR SHALL FIELD VERIFY ALL EXISTING JOB CONDITIONS, REVIEW ALL DRAWINGS AND VERIFY DIMENSIONS, ELEVATIONS, AND MEMBER SIZES PRIOR TO CONSTRUCTION OR MATERIAL PURCHASE. THE CONTRACTOR SHALL NOTIFY THE PROFESSIONAL OF RECORD IN WRITING OF ALL DISCREPANCIES AND EXCEPTIONS BEFORE PROCEEDING WITH THE WORK.

3. THE REMOVAL, CUTTING, DRILLING, ETC. OF EXISTING CONSTRUCTION SHALL BE PERFORMED WITH GREAT CARE IN ORDER NOT TO JEOPARDIZE THE STRUCTURAL INTEGRITY OF THE BUILDING. IF STRUCTURAL MEMBERS OR MECHANICAL, ELECTRICAL, OR ARCHITECTURAL FEATURES NOT INDICATED FOR REMOVAL INTERFERE WITH THE NEW WORK, THE PROFESSIONAL OF RECORD SHALL BE IMMEDIATELY NOTIFIED AND PRIOR WRITTEN APPROVAL SHALL BE OBTAINED BEFORE REMOVAL OR MODIFICATION OF MEMBERS.

4. THE CONTRACTOR SHALL RESTORE ALL EXISTING INCIDENTAL CONSTRUCTION REQUIRED TO BE REMOVED TO ACCOMMODATE THE ERECTION OF THE NEW JOIST CONSTRUCTION TO ITS ORIGINAL WORKING CONDITION.

5. THE CONTRACTOR IS SOLELY RESPONSIBLE FOR THE MEANS & METHOD OF ALL DEMOLITION WORK & FOR PROVIDING ALL NECESSARY TEMPORARY SHORING, BRACING & PROTECTION AS NECESSARY FOR SAFETY, STABILITY & PROTECTION OF ALL BUILDING ELEMENTS & STRUCTURE DURING CONSTRUCTION & DEMOLITION.

COLD FORMED STEEL:

1. ALL SIZING BASED ON STEEL STUD MANUFACTURERS ASSOCIATION (ICBO ER-4943P) PRODUCT TECHNICAL INFORMATION.

2. ALL GALVANIZED STUDS AND JOISTS 12, 14 AND 16 GAUGE SHALL BE FORMED FROM STEEL THAT CORRESPONDS TO THE MINIMUM REQUIREMENTS OF ASTM A653 SS, GRADE 50, CLASS 1 OR 3 WITH A MINIMUM YIELD OF 50,000 PSI.

3. ALL GALVANIZED STUDS, JOISTS, TRACK, BRIDGING AND ACCESSORIES SHALL BE FORMED FROM STEEL HAVING A GALVANIZED COATING MEETING THE REQUIREMENTS OF ASTM A525.

4. THE PHYSICAL AND STRUCTURAL PROPERTIES LISTED BY THE STEEL STUD MANUFACTURER ASSOCIATION AND AISI DESIGN MANUAL SHALL BE CONSIDERED THE MINIMUM PERMITTED FOR ALL FRAMING MEMBERS. SPECIFICALLY, THE FOLLOWING MINIMUM PROPERTIES, CALCULATED IN ACCORDANCE WITH THE LATEST AISI SPECIFICATION SHALL BE PROVIDED: IX (IN.4), SX (IN.3), AREA (IN.2), RX (IN.), FY (KSI), RESISTING MOMENT (IN.-LB.).

5. ANY SUBSTITUTIONS MUST BE APPROVED IN WRITING PRIOR TO DELIVERY, BY THE ARCHITECT AND/OR ENGINEER OF RECORD.

6. INSTALLATION OF STUDS SHALL BE AS PER ASTM C1007-00 "INSTALLATION OF LOAD BEARING (TRANSVERSE AND AXIAL) STEEL STUDS AND ACCESSORIES", ASTM C955-00a "SPECIFICATION FOR LOAD BEARING (TRANSVERSE AND AXIAL) STEEL STUDS, RUNNERS (TRACK), AND BRACING OR BRIDGING FOR SCREW APPLICATION OF GYPSUM BOARD AND METAL PLASTER BASES", AND ASTM C754-00 "SPECIFICATION FOR INSTALLATION OF STEEL FRAMING MEMBERS TO RECEIVE SCREW ATTACHED GYPSUM BOARD".

7. ALL FRAMING COMPONENTS SHALL BE CUT SQUARELY FOR ATTACHMENT TO PERPENDICULAR MEMBERS, OR AS REQUIRED FOR AN ANGULAR FIT AGAINST ABUTTING MEMBERS. MEMBERS SHALL BE HELD POSITIVELY IN PLACE UNTIL PROPERLY FASTENED.

8. TEMPORARY BRACING SHALL BE PROVIDED UNTIL ERECTION IS COMPLETED.

9. PROVIDE WEB STIFFENERS AT REACTION POINT WHERE INDICATED BY PLANS.

10. JOIST SHALL BE BRIDGED AT MAXIMUM 4'-0" SPACING.

11. END BLOCKING SHALL BE PROVIDED WHERE JOIST ENDS ARE NOT OTHERWISE RESTRAINED FROM ROTATION.

12. JOISTS MUST HAVE A MINIMUM OF 10" UNPUNCHED STEEL AT BEARING POINTS. STUDS MUST HAVE A MINIMUM OF 10" OF UNPUNCHED STEEL AT EACH END.

13. COLD-FORMED STEEL IDENTIFICATION LEGEND:

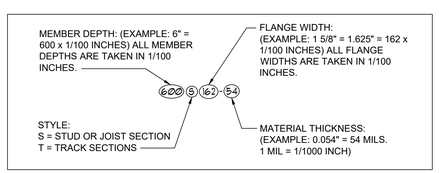

SPECIAL INSPECTIONS:

1. THE OWNER WILL EMPLOY THE SERVICES OF ONE OR MORE SPECIAL INSPECTORS TO PROVIDE SPECIAL INSPECTIONS DURING CONSTRUCTION FOR THE REQUIRED SPECIAL INSPECTION ITEMS.

2. THE SPECIAL INSPECTOR SHALL BE A QUALIFIED PERSON WHO SHALL DEMONSTRATE COMPETENCE, TO THE SATISFACTION OF THE BUILDING OFFICIAL AND THE REGISTERED DESIGN PROFESSIONAL RESPONSIBLE FOR THE DESIGN OF THE STRUCTURE, FOR INSPECTION OF THE PARTICULAR TYPE OF CONSTRUCTION OR OPERATION REQUIRING SPECIAL INSPECTION.

3. DUTIES AND RESPONSIBILITIES OF THE SPECIAL INSPECTOR:
   A. THE SPECIAL INSPECTOR SHALL OBSERVE THE WORK ASSIGNED FOR CONFORMANCE WITH THE APPROVED DESIGN DRAWINGS AND SPECIFICATIONS. THE INSPECTOR MAY NOT ALTER, MODIFY, ENLARGE OR WAVE ANY OF THE REQUIREMENTS OF THE DOCUMENTS.
   B. THE SPECIAL INSPECTOR SHALL FURNISH INSPECTION REPORTS TO THE BUILDING OFFICIAL, THE PROFESSIONAL-OF-RECORD, AND THE CONTRACTOR. ALL DISCREPANCIES SHALL BE BROUGHT TO THE IMMEDIATE ATTENTION OF THE CONTRACTOR FOR CORRECTION, THEN, IF UNCORRECTED, SUBMIT A COMPLETE LIST OF ALL OUTSTANDING DISCREPANCIES ON A WEEKLY BASIS TO THE OWNER, THE BUILDING OFFICIAL, AND THE PROFESSIONAL-OF-RECORD, UNTIL ALL CORRECTIONS HAVE BEEN COMPLETED.
   C. THE SPECIAL INSPECTOR SHALL SUBMIT A FINAL SIGNED REPORT STATING WHETHER THE WORK REQUIRING SPECIAL INSPECTION WAS, TO THE BEST OF THE INSPECTOR'S KNOWLEDGE, IN CONFORMANCE WITH THE APPROVED PLANS AND SPECIFICATIONS AND THE APPLICABLE WORKMANSHIP PROVISIONS OF THE BUILDING CODE.

4. WHERE SPECIAL INSPECTION REQUIREMENTS DUPLICATE THE REQUIREMENTS OF OTHER SPECIFIED TESTING, DUPLICATE INSPECTIONS SHALL NOT BE REQUIRED.

5. STRUCTURAL OBSERVATION (AS DEFINED IN CHAPTER 17 OF THE BUILDING CODE) IS NOT REQUIRED, UNLESS SPECIFICALLY REQUIRED BY THE BUILDING OFFICIAL.

6. SPECIAL INSPECTIONS SHALL BE PROVIDED IN ACCORDANCE WITH THE FOLLOWING TABLE:

SPECIAL INSPECTIONS SCHEDULE

SPECIAL INSPECTION	FREQ.	REFERENCED STANDARD(S)
STEEL CONSTRUCTION:		
1. MATERIAL VERIFICATION OF HIGH-STRENGTH BOLTS, NUTS, AND WASHERS, HIGH-STRENGTH BOLTING:		
A. IDENTIFICATION MARKINGS TO CONFORM TO ASTM STANDARDS SPECIFIED IN THE APPROVED CONSTRUCTION DOCUMENTS	PERIODIC	APPLICABLE ASTM MATERIAL SPECIFICATIONS;AISC ASD Sec. A3.4;AISC LRFD Sec. A3.3
B. MANUFACTURER'S CERTIFICATE OF COMPLIANCE REQUIRED	PERIODIC	
2. INSPECTION OF BEARING-TYPE CONNECTIONS	PERIODIC	AISC LRFD Sec. M2.5
3. MATERIAL VERIFICATION OF STRUCTURAL STEEL:		AISC LRFD Sec. M2.5
A. IDENTIFICATION MARKINGS TO CONFORM TO ASTM STANDARDS SPECIFIED IN THE APPROVED CONSTRUCTION DOCUMENTS.	---	ASTM A-6 OR ASTM A-568
B. MANUFACTURER'S CERTIFIED MILL TEST REPORTS REQUIRED	---	
4. MATERIAL VERIFICATION OF WELD FILLER MATERIALS:		
A. IDENTIFICATION MARKINGS TO CONFORM TO AWS SPECIFICATION IN THE APPROVED CONSTRUCTION DOCUMENTS	---	AISC ASD Sec. A3.6; AISC LRFD Sec. A3.5
B. MANUFACTURER'S CERTIFICATE OF COMPLIANCE REQUIRED	---	
5. INSPECTION OF WELDING:		
SINGLE-PASS FILLET WELDS ≤ 5/16"	PERIODIC	AWS D1.1
4. INSPECTION OF STEEL FRAME TO VERIFY COMPLIANCE WITH THE DETAILS ON THE APPROVED CONSTRUCTION DOCUMENTS:		
A. DETAILS SUCH AS BRACING AND STIFFENING	PERIODIC	IBC 1704.3.2
B. MEMBER LOCATIONS		
C. APPLICATION OF JOINT DETAILS AT EACH CONNECTION		
ADHESIVE ANCHORS/REINFORCEMENT:		
1. INSTALLATION PROCEDURE OF ADHESIVE ANCHORS OR REINFORCEMENT EMBEDDED WITH ADHESIVE (AS SPECIFIED ON THE CONSTRUCTION DOCUMENTS) IN MASONRY AND CONCRETE:		
A. SIZE AND EMBEDMENT OF ANCHORS/REINF.	CONTINUOUS	MANUFACTURERS INSTALLATION INSTRUCTIONS
B. ANCHORS/REINFORCEMENT INSTALLED PER MANUFACTURERS RECOMMENDATIONS.	CONTINUOUS	
CONCRETE CONSTRUCTION:		
1. INSPECTION OF REINFORCING STEEL AND PLACEMENT	PERIODIC	IBC1913.4; ACI 318: 3.5, 7.1-7.7
2. INSPECTION OF BOLTS TO BE INSTALLED IN CONCRETE PRIOR TO AND DURING PLACEMENT OF CONCRETE.	CONTINUOUS	IBC1911.5, 1912.1; ACI 318: 8.1.3, 21.2.8
3. INSPECTION OF ANCHORS INSTALLED IN HARDENED CONCRETE.	PERIODIC	IBC1912.1; ACI 318: 3.8.6, 8.1.3, 21.2.8
4. VERIFYING USE OF REQUIRED DESIGN MIX	PERIODIC	IBC:1904.2.2, 1913.2, 1913.3; ACI 318:Ch. 4, 5.2-5.4
5. AT THE TIME FRESH CONCRETE IS SAMPLED TO FABRICATE SPECIMENS FOR STRENGTH TESTS, PERFORM SLUMP AND AIR CONTENT TESTS, AND DETERMINE THE TEMPERATURE OF THE CONCRETE.	CONTINUOUS	IBC1913.10; ASTM C172; ASTM C31; ACI 318: 5.6, 5.8
6. INSPECTION OF CONCRETE PLACEMENT FOR PROPER APPLICATION TECHNIQUES	CONTINUOUS	IBC:1913.6, 1913.7, 1913.8; ACI 318:5.9, 5.10
7. INSPECTION FOR MAINTENANCE OF SPECIFIED CURING TEMPERATURE AND TECHNIQUES.	PERIODIC	IBC1913.9; ACI 318: 5.11-5.13
8. INSPECT FORMWORK FOR SHAPE, LOCATION AND DIMENSIONS OF THE CONCRETE MEMBER BEING FORMED.	PERIODIC	ACI 318: 6.1.1

RELEASE FOR CONSTRUCTION
AS NOTED ON PLANS REVIEW
DEVELOPMENT SERVICES
LEE'S SUMMIT, MISSOURI
06/17/2020

CASCO
12 Sunnen Drive, Suite 100, St. Louis, MO 63143 T: 314.645.2...

MIDLAND
GENERAL CONTRACTOR / PROJECT MANAGER

Starbucks & Medical Office

155 S.W. MO-150 HWY
LEE'S SUMMIT, MO 64802

CONSTR. DOC. & REVISIONS

No.	Description	Date
	Owner Review	05/12/20

6/17/20

MARK A. SPALINGER
License Number: E-27576
Expiration Date: 12/31/21

Drawn By/Checked By: BWT/NDM
Project Number 320488

Permit Date 06-17-20

GENERAL NOTES

S001

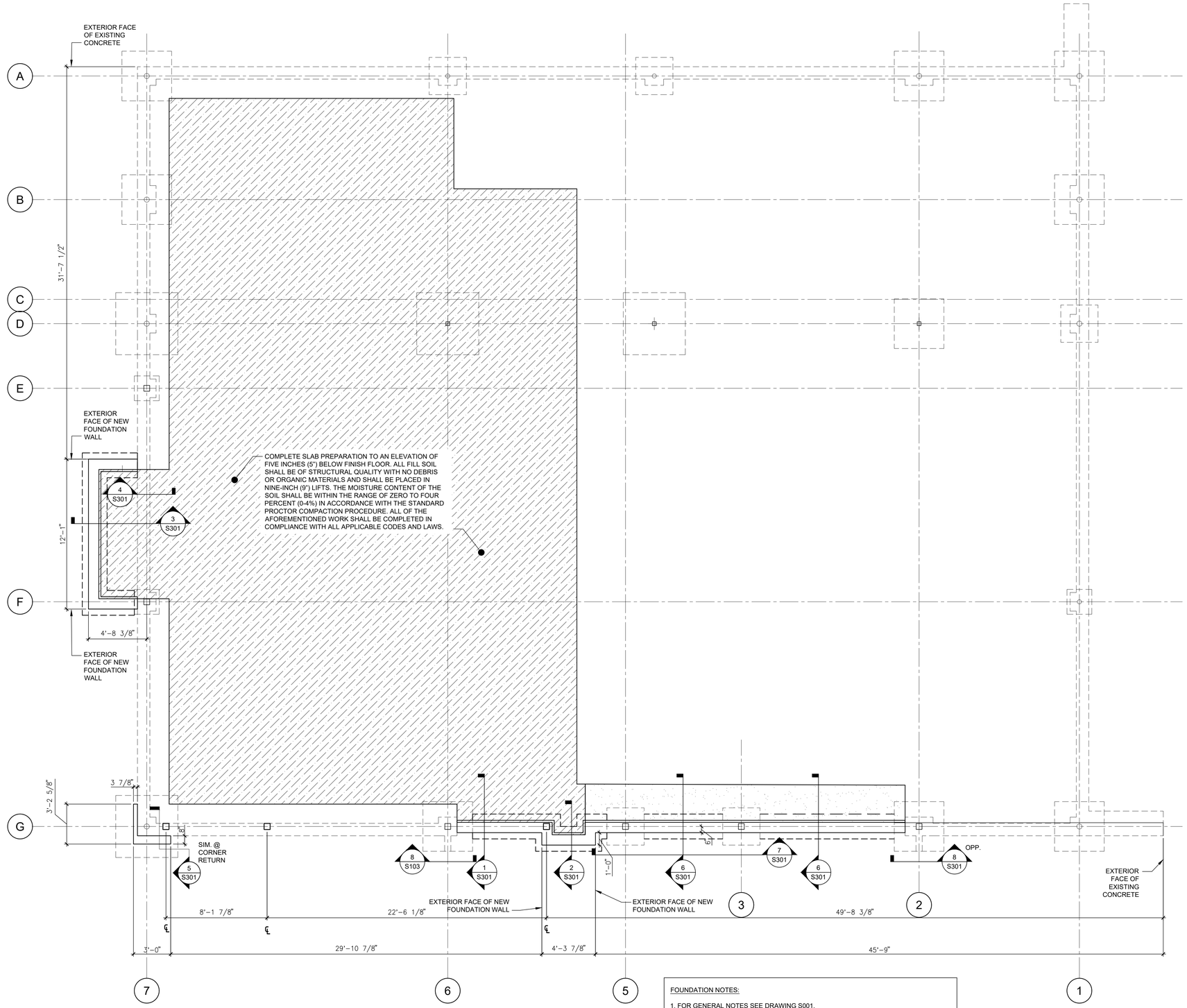

NORTH

1 S101 FOUNDATION PLAN

SCALE: 1/4" = 1'-0"

FOUNDATION NOTES:

1. FOR GENERAL NOTES SEE DRAWING S001.
2. FOR FOUNDATION DETAILS SEE SHEET S301.
3. REFERENCE SLAB ELEVATION SHALL BE ELEVATION 0'-0".
4. COORDINATE EXTENT OF SLAB INFILL WITH SHEET D101.
5. NEW 5" SLAB. SEE SUBGRADE PREPARATION NOTE SHEET S001.

RELEASE FOR CONSTRUCTION
AS NOTED ON PLANS REVIEW
DEVELOPMENT SERVICES
LEE'S SUMMIT, MISSOURI
06/17/2020

CASCO
12 Sunnen Drive, Suite 100, St. Louis, MO 63143 T: 314.645.2400

MIDLAND
GENERAL CONTRACTOR | DESIGN-BUILD

Starbucks & Medical Office

155 S.W. MO-150 HWY
LEE'S SUMMIT, MO 64802

CONSTR. DOC. & REVISIONS

No.	Description	Date
	Owner Review	05/12/20

6/17/20

MARK A. SPALINGER
License Number: E-27576
Expiration Date: 12/31/21

Drawn By/Checked By: BWT/NDM
Project Number 320488

Permit Date 06-17-20

FOUNDATION PLAN

S101

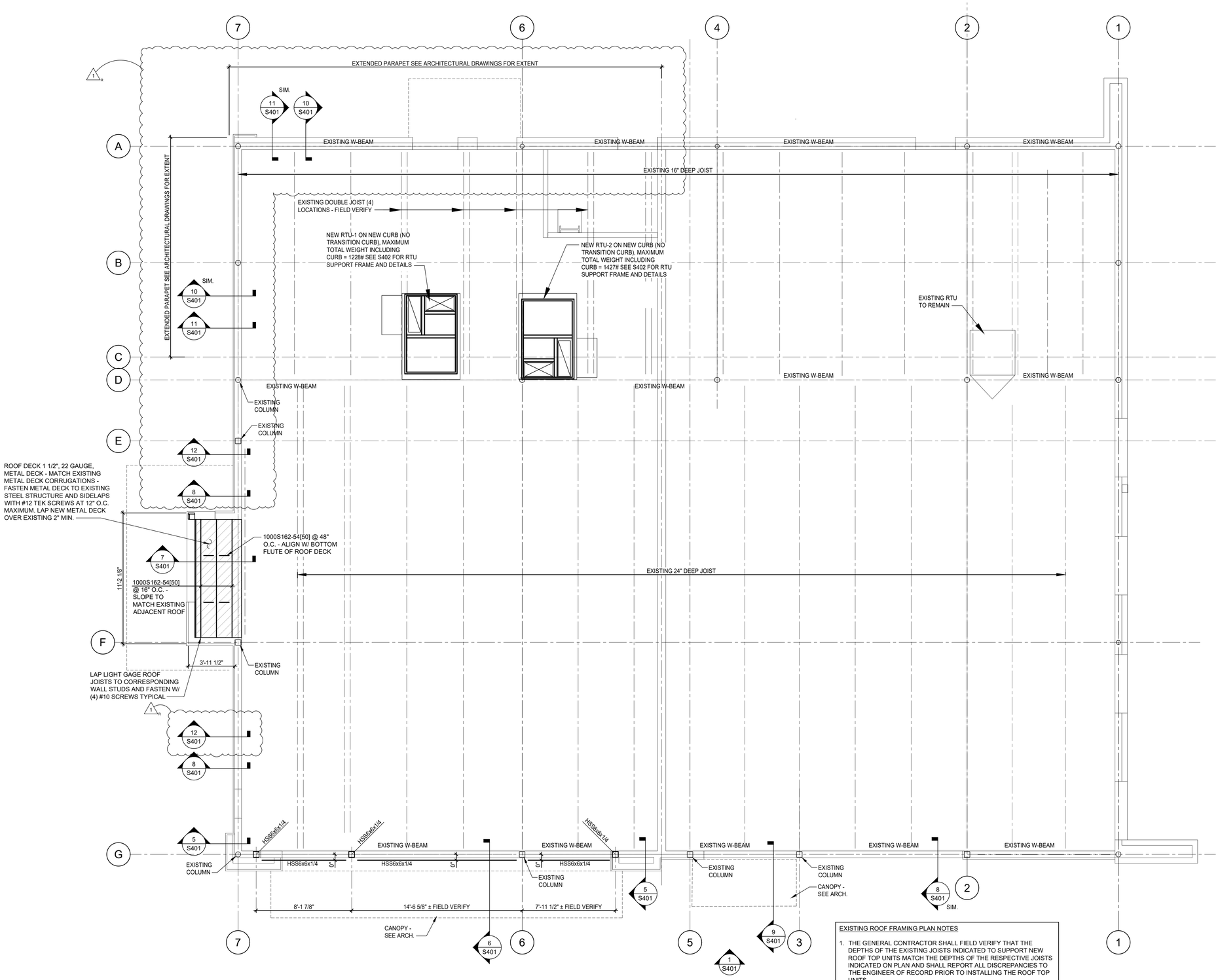

NORTH

1 S201 ROOF FRAMING PLAN

SCALE: 1/4" = 1'-0"

EXISTING ROOF FRAMING PLAN NOTES

1. THE GENERAL CONTRACTOR SHALL FIELD VERIFY THAT THE DEPTHS OF THE EXISTING JOISTS INDICATED TO SUPPORT NEW ROOF TOP UNITS MATCH THE DEPTHS OF THE RESPECTIVE JOISTS INDICATED ON PLAN AND SHALL REPORT ALL DISCREPANCIES TO THE ENGINEER OF RECORD PRIOR TO INSTALLING THE ROOF TOP UNITS.
2. PLACE NEW UNITS WHERE SHOWN ON PLAN.
3. ALL ROOF DECK PENETRATIONS WITH DIMENSIONS LESS THAN 13" SHALL BE REINFORCED WITH GAGE SHEET METAL IN ACCORDANCE WITH THE STEEL DECK INSTITUTE RECOMMENDATIONS.

RELEASE FOR CONSTRUCTION
AS NOTED ON PLANS REVIEW
DEVELOPMENT SERVICES
LEE'S SUMMIT, MISSOURI
06/17/2020

CASCO
12 Sunnen Drive, Suite 100, St. Louis, MO 63143 T: 314.645.2...

MIDLAND
GENERAL CONTRACTOR / DESIGN-BUILD

Starbucks & Medical Office

155 S.W. MO-150 HWY
LEE'S SUMMIT, MO 64802

CONSTR. DOC. & REVISIONS

No.	Description	Date
1	Owner Review	05/12/20
	Code Comments	6/30/20

CASCO DIVERSIFIED CORPORATION
ENGINEERING
CERTIFICATE OF AUTHORITY
#000613 12/31/20

07/06/20

MARK A. SPALINGER
License Number: E-27576
Expiration Date: 12/31/21

Drawn By/Checked By:	BWT/NDM
Project Number	320488
Permit Date	06-17-20

ROOF FRAMING PLAN

S201

CASCO
12 Sunnen Drive, Suite 100, St. Louis, MO 63143 T: 314.781.2777

MIDLAND
GENERAL CONTRACTOR | DESIGN-BUILD

Starbucks & Medical Office

155 S.W. MO-150 HWY
LEE'S SUMMIT, MO 64802

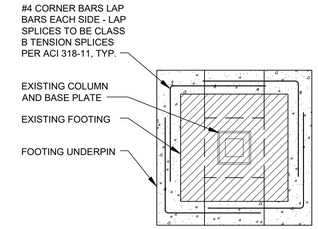

9 S301 PLAN DETAIL
SCALE: 1/2" = 1'-0"

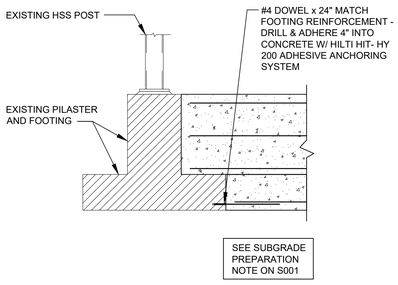

8 S301 DETAIL
SCALE: 1/2" = 1'-0"

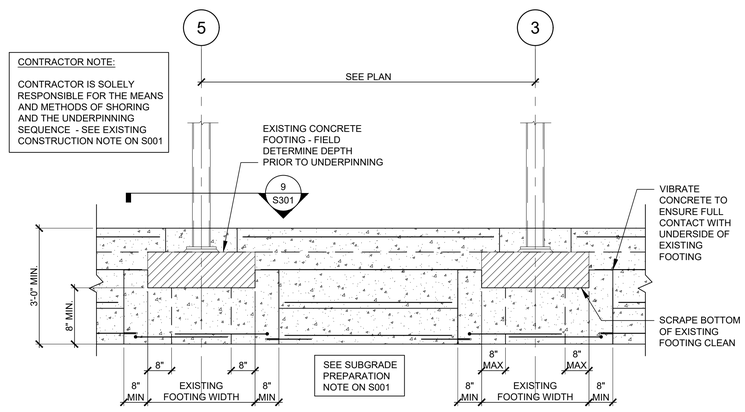

7 S301 ELEVATION
SCALE: 1/2" = 1'-0"

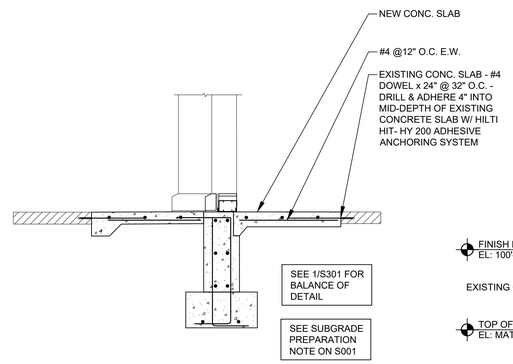

6 S301 SECTION
SCALE: 1/2" = 1'-0"

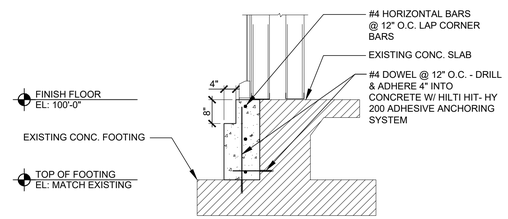

5 S301 DETAIL
SCALE: 1/2" = 1'-0"

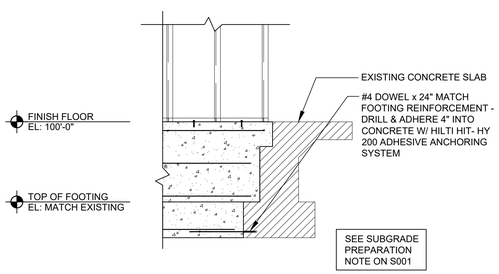

4 S301 DETAIL
SCALE: 1/2" = 1'-0"

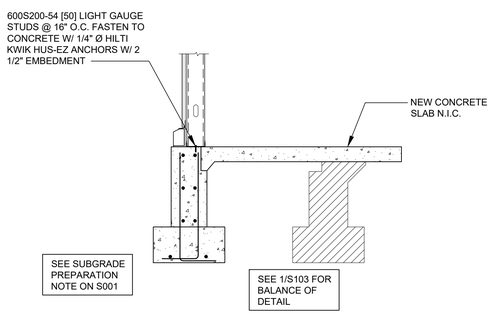

3 S301 SECTION
SCALE: 1/2" = 1'-0"

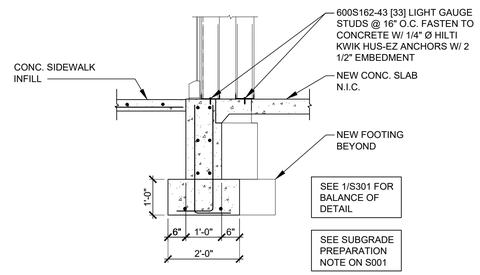

2 S301 SECTION
SCALE: 1/2" = 1'-0"

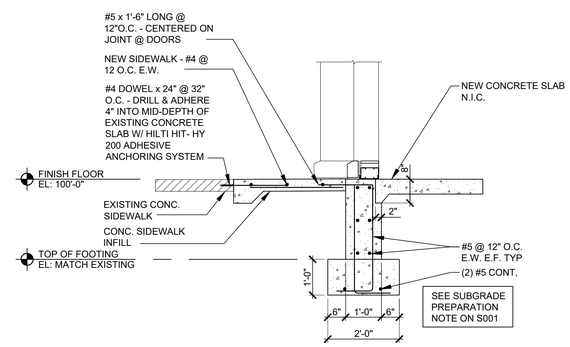

1 S301 SECTION
SCALE: 1/2" = 1'-0"

CONSTR. DOC. & REVISIONS

No.	Description	Date
1	Owner Review	05/12/20

6/17/20

MARK A. SPALINGER
License Number: E-27576
Expiration Date: 12/31/21

Drawn By/Checked By:	BWT/NDM
Project Number	320488
Permit Date	06-17-20

FOUNDATION DETAILS

S301

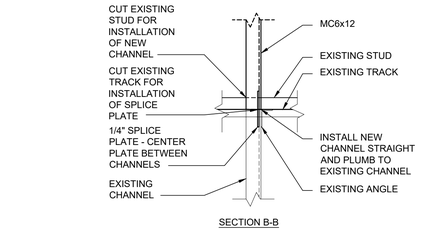

SECTION B-B

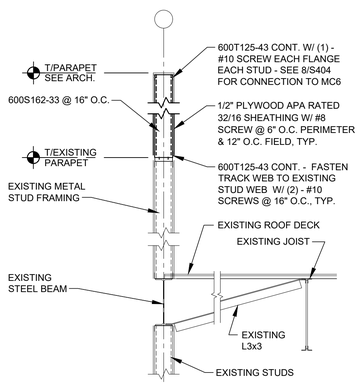

11 S401 SECTION
SCALE: 1/2" = 1'-0"

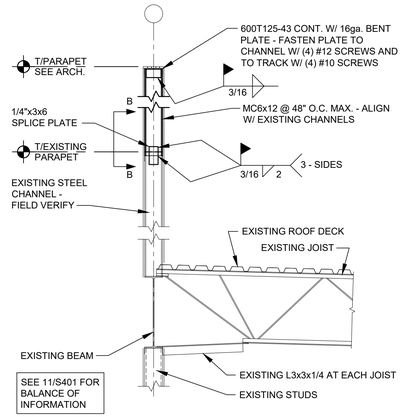

10 S401 SECTION
SCALE: 1/2" = 1'-0"

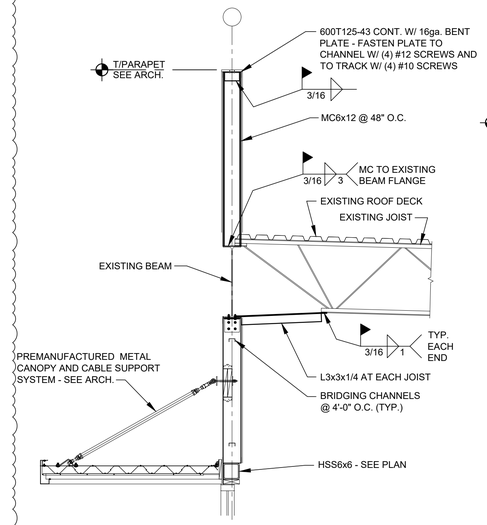

9 S401 SECTION
SCALE: 1/2" = 1'-0"

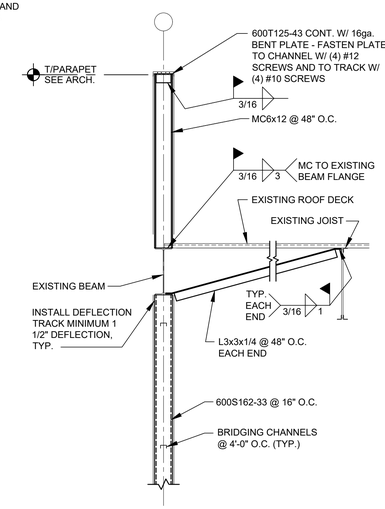

8 S401 SECTION
SCALE: 1/2" = 1'-0"

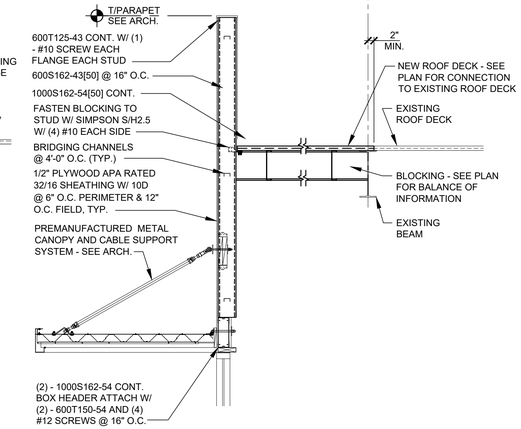

7 S401 SECTION
SCALE: 1/2" = 1'-0"

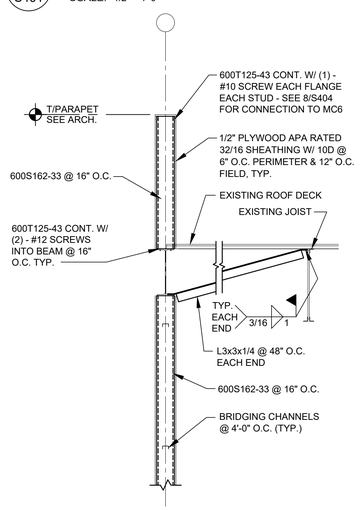

12 S401 SECTION
SCALE: 1/2" = 1'-0"

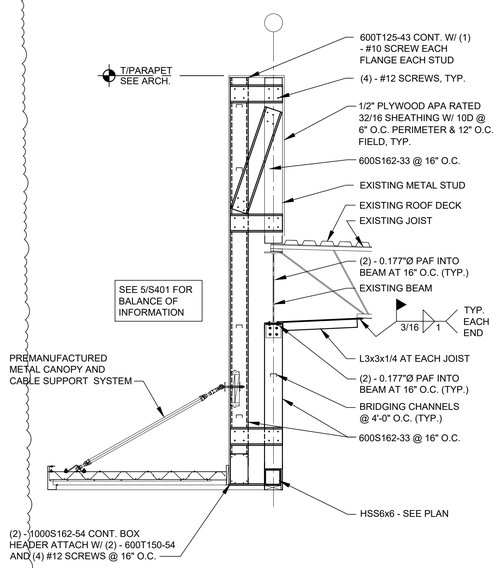

6 S401 SECTION
SCALE: 1/2" = 1'-0"

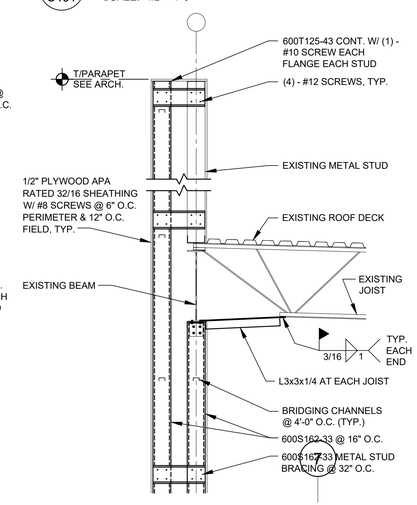

5 S401 SECTION
SCALE: 1/2" = 1'-0"

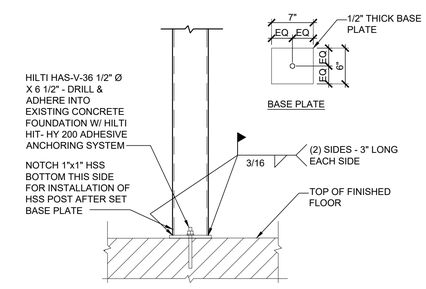

4 S401 DETAIL
SCALE: 1" = 1'-0"

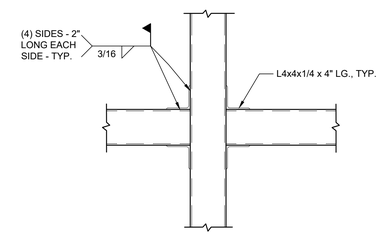

3 S401 DETAIL
SCALE: 1" = 1'-0"

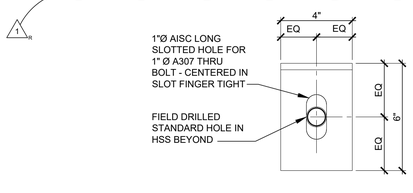

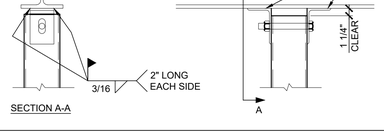

SECTION A-A

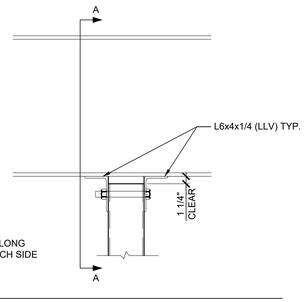

2 S401 DETAIL
SCALE: 1" = 1'-0"

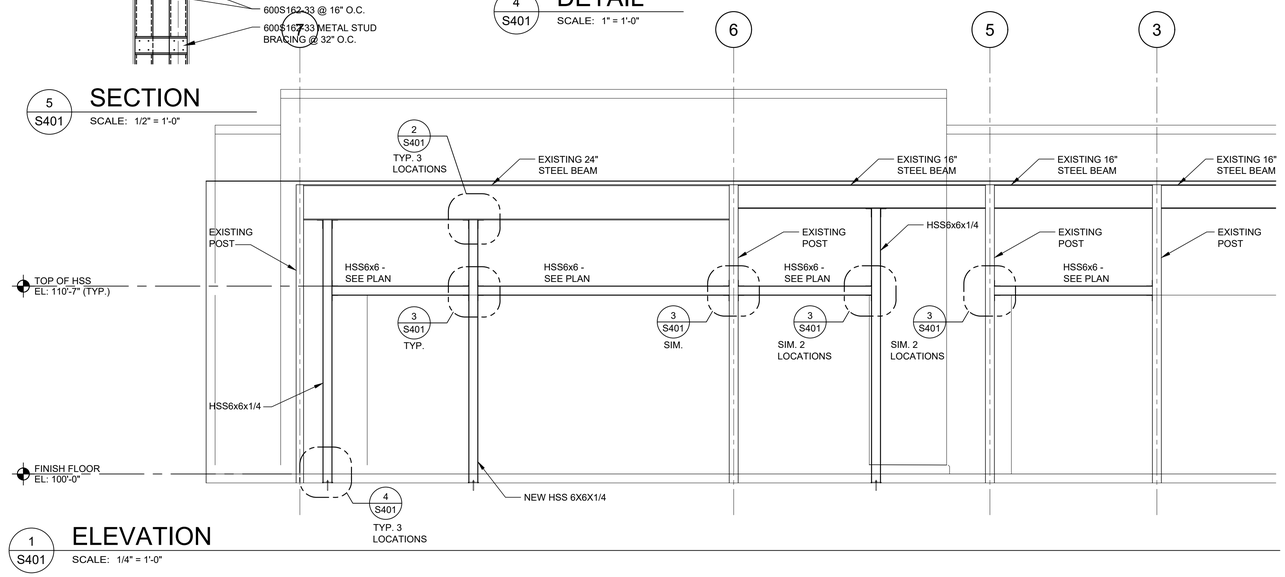

1 S401 ELEVATION
SCALE: 1/4" = 1'-0"

RELEASE FOR CONSTRUCTION
AS NOTED ON PLANS REVIEW
DEVELOPMENT SERVICES
LEE'S SUMMIT, MISSOURI
06/17/2020

CASCO
12 Sunnen Drive, Suite 100, St. Louis, MO 63143 T: 314.781.2777

MIDLAND
GENERAL CONTRACTOR | DESIGN-BUILD

Starbucks & Medical Office

155 S.W. MO-150 HWY
LEE'S SUMMIT, MO 64802

CONSTR. DOC. & REVISIONS

No.	Description	Date
1	Owner Review	05/12/20
	Code Comments	06/30/20

CASCO DIVERSIFIED CORPORATION
ENGINEERING
CERTIFICATE OF AUTHORITY
#000613 12/31/20

07/06/20

MARK A. SPALINGER
License Number: E-27576
Expiration Date: 12/31/21

Drawn By/Checked By:	BWT/NDM
Project Number	320488
Permit Date	06-17-20

ELEVATION & ROOF FRAMING DETAILS

S401

CASCO
12 Sunnen Drive, Suite 100, St. Louis, MO 63143 T: 314.645.2...

MIDLAND
GENERAL CONTRACTOR / PROJECT MANAGER

Starbucks & Medical Office

155 S.W. MO-150 HWY
LEE'S SUMMIT, MO 64802

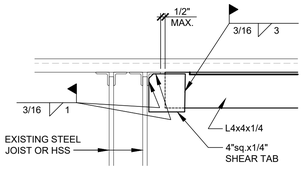

SECTION A-A

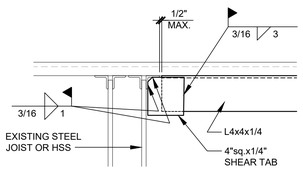

DETAIL B-B

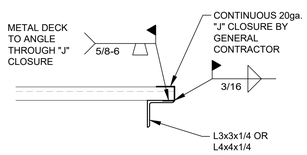

DETAIL C-C

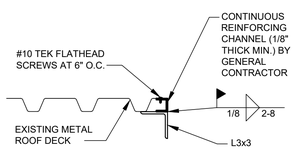

DETAIL D-D (AT HIGH RIB CONDITION)

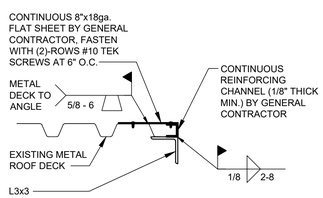

DETAIL D-D (AT LOW RIB CONDITION)

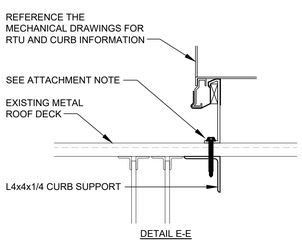

DETAIL E-E

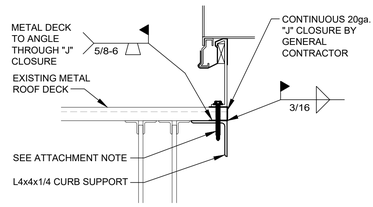

DETAIL F-F

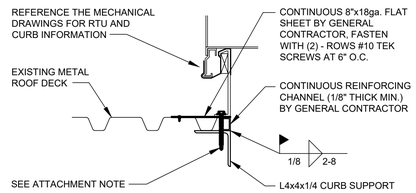

DETAIL G-G (CURB FULLY SUPPORTED BY DECK RIB)

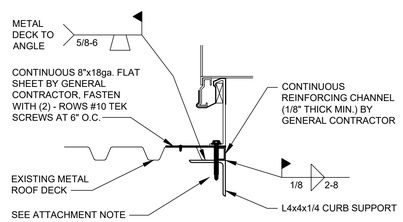

DETAIL G-G (CURB OVER DECK VALLEY)

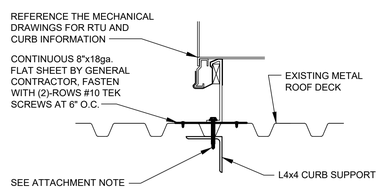

DETAIL H-H (CURB OVER DECK VALLEY)

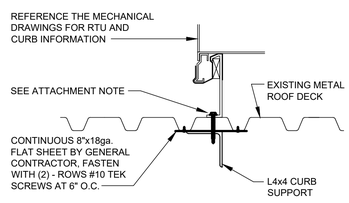

DETAIL H-H (CURB FULLY SUPPORTED BY DECK RIB)

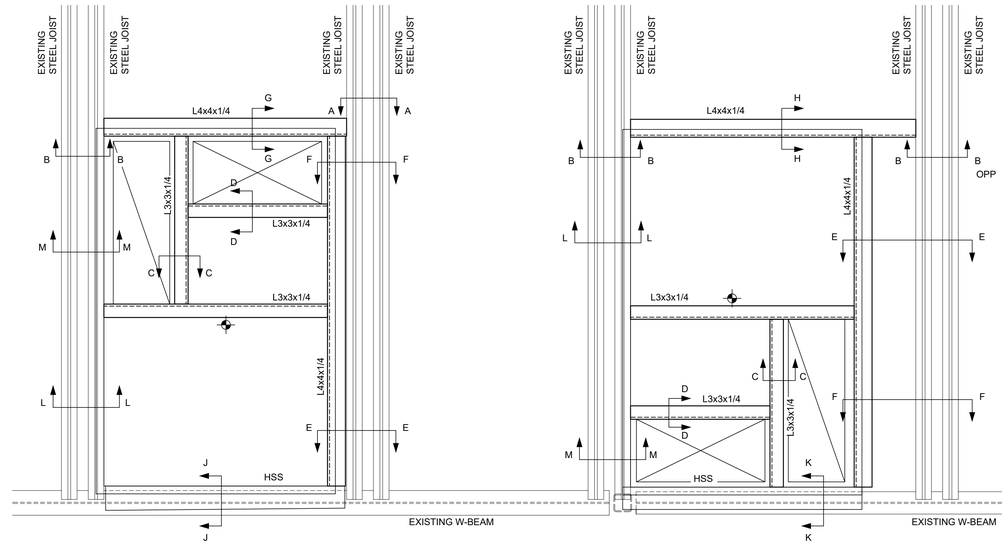

ATTACHMENT NOTE:

ANCHOR CURB WITH (3) 1/4"Ø SELF DRILLING SCREWS ALONG SHORT DIM. OF UNIT & (5) 1/4"Ø SELF DRILLING SCREWS ALONG LONG DIM. OF UNIT - LOCATE 6" FROM EACH END OF CURB AND AT EQUALLY SPACED INTERVALS IN BETWEEN - TYPICAL EACH SIDE OF CURB

NOTES:
1. CUT AND REMOVE EXISTING ROOF DECK AFTER FRAME IS INSTALLED, IMMEDIATELY PRIOR TO INSTALLING EQUIPMENT. CUT OPENINGS FOR DUCT PENETRATIONS ONLY.
2. COORDINATE WITH THE MECHANICAL DRAWINGS AND MECHANICAL CONTRACTOR FOR ALL CURB AND DUCT OPENING DIMENSIONS FOR ROOF TOP EQUIPMENT.

RTU SUPPORT FRAMING PLANS

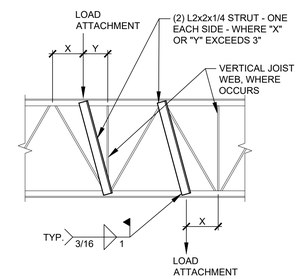

JOIST LOAD STRUT DETAIL

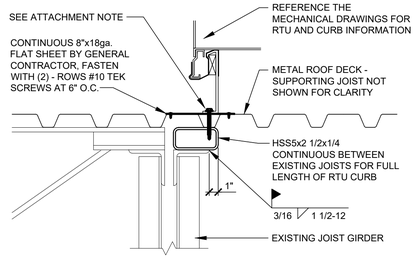

DETAIL J-J (CURB OVER DECK VALLEY)

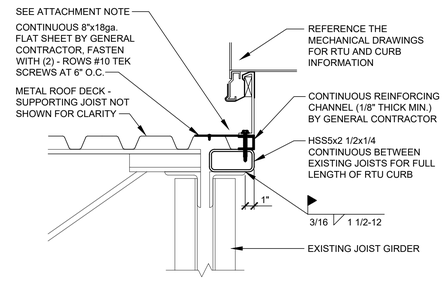

DETAIL K-K (CURB OVER DECK VALLEY)

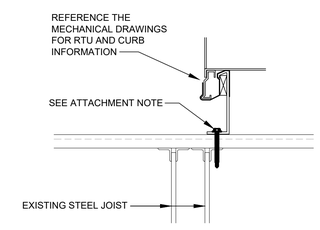

SECTION L-L

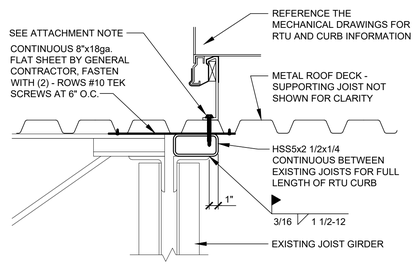

DETAIL J-J (CURB FULLY SUPPORTED BY DECK RIB)

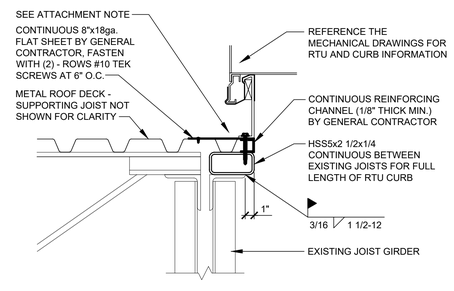

DETAIL K-K (CURB FULLY SUPPORTED BY DECK RIB)

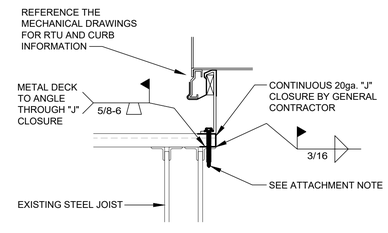

SECTION M-M

CONSTR. DOC. & REVISIONS

No.	Description	Date
1	Owner Review	05/12/20

6/17/20

MARK A. SPALINGER
License Number: E-27576
Expiration Date: 12/31/21

Drawn By/Checked By:	BWT/NDM
Project Number	320488
Permit Date	06-17-20

ROOF TOP UNIT SUPPORT PLANS & DETAILS

S402

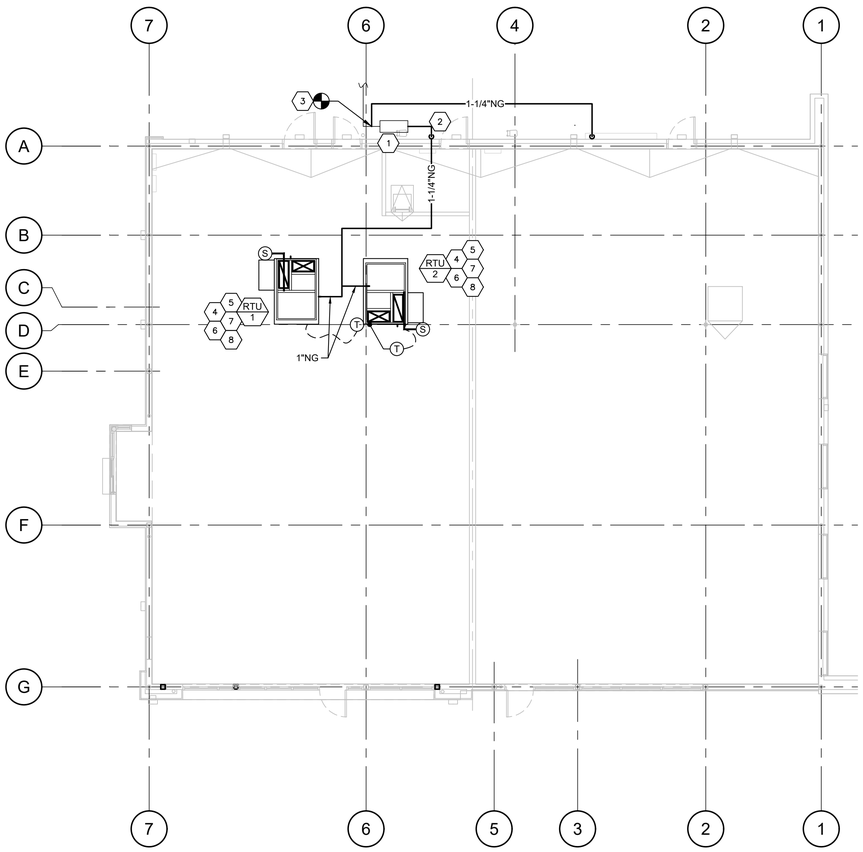

NORTH

MECHANICAL PLAN

SCALE: 1/8" = 1'-0"

KEYED NOTES

1. EXISTING GAS METER TO REMAIN AND BE REUSED. CONTRACTOR SHALL VERIFY EXISTING GAS METER IS REGULATED FOR 7" W.C. PRESSURE, AND HAS A MINIMUM CAPACITY OF 404 CFH. GAS PIPING IS SIZED BASED ON SCHEDULE 40 METALLIC PIPE, 7" W.C. INLET PRESSURE, 0.5" W.C. PRESSURE DROP, 0.60 SPECIFIC GRAVITY, OVER A TOTAL DEVELOPED LENGTH OF 50'-0", AS PER THE 2015 INTERNATIONAL FUEL GAS CODE, TABLE 402.4(2). ANY DISCREPANCIES IN THIS INFORMATION SHOULD BE IMMEDIATELY BROUGHT TO THE ATTENTION OF THE CONSTRUCTION MANAGER AND/OR PROJECT ENGINEER. FIELD VERIFY EXTENT OF WORK PRIOR TO INSTALLATION OF PIPING.
2. CONTRACTOR SHALL EXTEND NEW 1-1/4" GAS RISER UP TO ROOF OUTSIDE OF BUILDING, TIGHT TO WALL. PROVIDE AN APPROVED GAS SHUT-OFF AT 48" ABOVE FINISHED GRADE.
3. UTILITY SHALL BE RESPONSIBLE FOR SPLITTING GAS SERVICE. CONTRACTOR SHALL THEN CONNECT AND EXTEND NEW GAS LINE OF SIZE SHOWN TO FUTURE TENANT SPACE AS INDICATED ON DRAWING. PROVIDE GAS SHUT-OFF VALVE AT CONNECTION POINT AND JUST INSIDE BUILDING EXTERIOR. TEMPORARILY CAP STUB-IN FOR FUTURE CONNECTION BY TENANT. FUTURE TENANT IS ESTIMATED TO REQUIRE 250 CFH OF GAS.
4. CONTRACTOR TO EXTEND AND CONNECT NEW GAS PIPING TO NEW HVAC UNIT, AS INDICATED. SEE DETAIL ON SHEET M201.
5. CONTRACTOR SHALL INSTALL NEW CONTRACTOR PROVIDED HVAC UNIT AND CONTRACTOR PROVIDED ROOF CURB AS INDICATED ON PLANS, SCHEDULE AND NOTES. PROVIDE NEW ROOF OPENINGS AND STRUCTURAL SUPPORT, AS SHOWN ON STRUCTURAL DRAWINGS. PROVIDE FULL SIZE DUCT DROPS 2'-0" BELOW STRUCTURE FOR FUTURE CONNECTION BY TENANT.
6. PROVIDE FULL SIZE CONDENSATE TRAP/LINE. TERMINATE IN A CODE APPROVED LOCATION. SEE DETAIL ON SHEET M201.
7. FURNISH AND INSTALL DUCT SMOKE DETECTOR (SYSTEM SENSOR #D4120) IN RETURN AIR DROP FROM UNIT. WIRE DUCT SMOKE DETECTOR TO BUILDING FIRE ALARM CONTROL PANEL OR FURNISH AND INSTALL A REMOTE AUDIBLE/VISUAL ALARM DEVICE WITH A REMOTE TEST SWITCH (SYSTEM SENSOR #RTS2-AOS) LOCATED IN AN APPROVED LOCATION. FIELD VERIFY EXACT REQUIREMENTS. CONTRACTOR SHALL TEST SYSTEM TO INSURE PROPER FUNCTION PRIOR TO TENANT OCCUPYING SPACE.
8. MOUNT THERMOSTAT TO COLUMN, AS SHOWN, AT 48" ABOVE FINISHED FLOOR. NOTE: THERMOSTAT TO BE USED FOR STARTUP PURPOSES ONLY, AND WILL BE REPLACED BY TENANT'S ENERGY MANAGEMENT SYSTEM. SEE SCHEDULE SHEET 201 FOR FURTHER DETAIL.

SYMBOLS LEGEND

—NG—	NEW NATURAL GAS STUB-IN
M	NEW GAS METER
EQ 7	EQUIPMENT/FIXTURE DESIGNATION
KN	KEYED NOTE
1	REVISION NUMBER
TYP.	TYPICAL
F.V.	FIELD VERIFY
T	THERMOSTAT
S	SMOKE DETECTOR

SPECIFICATIONS

GENERAL MECHANICAL CONDITIONS

TENANT SHALL FURNISH SELECTED MECHANICAL EQUIPMENT, ACCESSORIES AND CONTROLS AS SCHEDULED AND AS SPECIFIED. THE MECHANICAL SUBCONTRACTOR(S) SHALL BE RESPONSIBLE FOR DELIVERY COORDINATION, RECEIVING, STORING, SETTING, STARTUP AND INSTALLING ALL TENANT FURNISHED EQUIPMENT AS WELL AS THE ONE YEAR PARTS AND LABOR WARRANTY FROM THE DATE OF STORE OPENING.

A. SCOPE

1. PROVIDE ALL LABOR, MATERIALS AND EQUIPMENT NECESSARY TO PROPERLY INSTALL AIR CONDITIONING SYSTEMS WHERE SHOWN ON DRAWINGS AND AS SCHEDULED.
2. PROVIDE EQUIPMENT AS SPECIFIED TOGETHER WITH ALL NECESSARY DUCTS, GRILLES, REGISTERS, CONTROLS, PIPING, LOW VOLTAGE FANS, CONTROL WIRING, HANGERS, STANDS, EQUIPMENT SUPPORTS, FLASHING AT EQUIPMENT, DUCT AND PIPE INSULATION, UNLESS OTHERWISE NOTED.
3. RELATED WORK BY OTHERS:
   a. PAINTING EXCEPT AS HEREIN SPECIFIED.
   b. LINE VOLTAGE WIRING AND CONDUIT.
   c. ELECTRICAL SUPPLY CONNECTION TO EQUIPMENT.

B. ALL WORK SHALL CONFORM TO ALL FEDERAL, STATE AND LOCAL CODES AND ANY LANDLORD REQUIREMENTS AS SPECIFIED IN THE EXECUTED LEASE AGREEMENT. CONTRACTOR SHALL VERIFY AND COORDINATE SCOPE OF WORK WITH TENANT AND LANDLORD.

C. THE CONTRACTOR SHALL EXAMINE THE PREMISES AND VERIFY THE EXISTING CONDITIONS UNDER WHICH HE WILL BE OBLIGATED TO OPERATE IN PERFORMING HIS PART OF THE WORK OR THAT WILL IN ANY MANNER AFFECT THE WORK UNDER CONTRACT. NO ADDITIONAL COMPENSATION SHALL BE PROVIDED FOR CONDITIONS FOUND DURING THE EXECUTION OF CONTRACTED WORK. THE CONTRACTOR SHALL COOPERATE WITH ALL OTHER TRADES SO THAT THE INSTALLATION OF ALL EQUIPMENT MAY BE PROPERLY COORDINATED. CONTRACTOR SHALL BRING TO THE ATTENTION OF THE CONSTRUCTION MANAGER ANY DISCREPANCIES BETWEEN FIELD CONDITIONS AND DESIGN DOCUMENTS.

D. ALL EQUIPMENT FURNISHED SHALL FIT THE SPACE AVAILABLE, WITH CONNECTIONS, ETC., IN THE REQUIRED LOCATIONS AND WITH ADEQUATE SPACE FOR OPERATING AND SERVICING. SHOULD A CONFLICT EXIST BETWEEN THE DRAWINGS AND THE SPECIFICATIONS, THE CONTRACTOR SHALL PROMPTLY NOTIFY THE CONSTRUCTION MANAGER WHOSE DECISION SHALL BE FINAL. NO ALLOWANCE WILL BE MADE, SUBSEQUENTLY, IN THIS CONNECTION ON BEHALF OF THE CONTRACTOR AFTER AWARD OF THE CONTRACT.

E. ALL MECHANICAL EQUIPMENT SHALL CONFORM WITH THE REQUIREMENTS OF THE STATE MECHANICAL CODE, THE STATE BUILDING CODE, THE STATE ENERGY CODE, NFPA 90A, 96.101 AND ALL APPLICABLE LOCAL CODES AND ORDINANCES.

F. DRAWINGS FOR MECHANICAL WORK ARE DIAGRAMMATIC SHOWING THE GENERAL LOCATION, TYPE, LAYOUT AND EQUIPMENT REQUIRED. THE DRAWINGS SHALL NOT BE SCALED FOR EXACT MEASUREMENTS. REFER TO MANUFACTURER'S STANDARD INSTALLATION DRAWINGS FOR EQUIPMENT CONNECTIONS AND INSTALLATION REQUIREMENTS AS REQUIRED. FURNISH AND INSTALL DUCTWORK, CONNECTIONS, ACCESSORIES, OFFSETS AND MATERIALS NECESSARY TO FACILITATE THE SYSTEM'S FUNCTIONING AS INDICATED BY THE DESIGN AND THE EQUIPMENT INDICATED. CONTRACTOR SHALL OBTAIN ALL NECESSARY PERMITS AND PAY ANY ASSOCIATED FEES.

G. THE CONTRACTOR SHALL INSTALL ALL PIPING, DUCTWORK, FIXTURES AND EQUIPMENT AS REQUIRED TO CONFORM THE STRUCTURE, AVOID OBSTRUCTIONS, PRESERVE CEILING HEIGHTS AND HEADROOM AND MAKE ALL EQUIPMENT REQUIRING MAINTENANCE OR REPAIR ACCESSIBLE.

H. THE CONTRACTOR SHALL INSTALL MECHANICAL SYSTEMS AS SHOWN, NOTED AND SPECIFIED. EQUIPMENT MAY NOT BE SUBSTITUTED UNLESS WRITTEN APPROVAL BY THE ENGINEER OR TENANT'S REPRESENTATIVE IS OBTAINED. ANY UNAUTHORIZED CHANGES SHALL BE REMOVED AT CONTRACTOR'S EXPENSE IF DEEMED NECESSARY BY ENGINEER OR TENANT'S REPRESENTATIVE. CONTRACTOR SHALL BE RESPONSIBLE FOR ANY REQUIRED CHANGE TO RELATED WORK CAUSED BY THE SUBSTITUTION OF ANY ITEMS OF MATERIALS OR EQUIPMENT AT NO ADDITIONAL COST TO THE OWNER.

HVAC UNITS

A. CONTRACTOR SHALL COORDINATE THE DELIVERY, RECEIVING, STORAGE, RIGGING, HOISTING, INSTALLATION AND START UP OF HEATING AND COOLING UNITS INCLUDING ALL ACCESSORIES AS SCHEDULED AND AS INDICATED ON THE DRAWINGS.

B. HVAC UNITS SHALL BE FURNISHED COMPLETE WITH CASING, REFRIGERATION SYSTEM, HEATING SECTION (AS SCHEDULED ON DRAWINGS), FANS, MOTORS AND DRIVES, FILTERS, AUTOMATIC CONTROLS, AND OPTIONS AND ACCESSORIES AS SCHEDULED ON DRAWINGS.

C. TEMPERATURE CONTROLS.

1. HVAC UNITS SHALL BE FURNISHED WITH FACTORY INSTALLED AND TESTED COMPONENTS TO PROVIDE TWO STAGES OF COOLING, TWO STAGES OF HEATING (WHERE APPLICABLE), ANTI-RECYCLE TIMER, FIVE (5) MINUTE COMPRESSOR STAGING RELAY, AND OTHER ITEMS AS SCHEDULED ON DRAWINGS.

D. SEQUENCE OF OPERATION

1. OCCUPIED HOURS.
   a. UNIT OUTDOOR AIR DAMPER SHALL OPEN TO ITS MINIMUM POSITION AND UNIT SUPPLY FAN SHALL OPERATE CONTINUOUSLY.
   b. UNIT COMPRESSOR(S) SHALL CYCLE OR HEAT EXCHANGER SHALL STAGE TO MAINTAIN SPACE SETPOINT.
   c. UNIT ECONOMIZER CYCLE SHALL BE INITIATED UPON A SIGNAL FROM OUTDOOR AND RETURN AIR TEMPERATURE AND ENTHALPY SENSORS. OUTDOOR AIR DAMPER, RETURN AIR DAMPER, AND UNIT COMPRESSOR(S) SHALL CYCLE TO MAINTAIN SPACE SETPOINT. ECONOMIZER CYCLE SHALL OVER RIDE CO2 MONITORING SYSTEM.
2. UNOCCUPIED HOURS.
   a. UNIT OUTDOOR AIR DAMPER SHALL REMAIN CLOSED AND UNIT SUPPLY FAN SHALL CYCLE ON A SIGNAL FROM SPACE SENSOR.
   b. UNIT COMPRESSOR(S) SHALL CYCLE OR HEAT EXCHANGER SHALL STAGE WITH UNIT SUPPLY FAN TO MAINTAIN SPACE SETPOINT.
3. SMOKE ALARM (WHERE REQUIRED).
   a. UNIT OUTDOOR AIR DAMPER SHALL CLOSE AND UNIT SUPPLY FAN SHALL STOP ON A SIGNAL FROM DUCT SMOKE DETECTOR. DUCT SMOKE DETECTOR SHALL SEND A SIGNAL TO REMOTE ALARM DEVICE.

EXECUTION

A. ALL OUTSIDE AIR INTAKES SHALL BE A MINIMUM OF 10'-0" AWAY FROM EXHAUST DISCHARGE OPENINGS AND PLUMBING VENT STACKS.

B. PROVIDE UL APPROVED FIRE DAMPERS FOR ALL PENETRATIONS THROUGH FIRE RATED WALLS, PARTITIONS, CEILINGS, AND FLOORS. INSTALL FIRE DAMPERS AS PER MANUFACTURER'S DIRECTIONS AND AS PER UL GUIDLINES.

C. SUPPLY, RETURN AND POSITIVE PRESSURE EXHAUST DUCTWORK SHALL BE SEALED IN ACCORDANCE WITH SMACNA SEAL CLASS "C".

D. CORE-DRILL OR SAW-CUT EXISTING WALLS, ROOF, ETC. AS REQUIRED FOR PIPING OR DUCTWORK AND FIRE-STOP OPENING AROUND PIPE OR DUCTWORK. VERIFY LOCATION OF STRUCTURAL BEAMS, JOISTS, ETC. BEFORE DRILLING OR CUTTING. NOTIFY ARCHITECT OF ANY DISCREPANCIES.

E. WHEREVER FOUNDATION WALLS, OUTSIDE WALLS, ROOFS, ETC. ARE CUT FOR INSTALLATION OF SYSTEMS, THEY SHALL BE PATCHED TO MATCH EXISTING CONSTRUCTION AND SEALED WEATHER TIGHT. WORK SHALL BE PERFORMED BY CRAFTSMEN SKILLED IN THEIR RESPECTIVE TRADES.

F. PROVIDE 3 SETS OF PLEATED DISPOSABLE FILTERS. ONE SET TO BE USED UNTIL COMPLETION OF CONSTRUCTION PHASE. INSTALL ONE SET AT COMPLETION OF CONSTRUCTION PHASE AND DELIVER ONE SET TO OWNER AND LABEL EACH SET OF FILTERS TO DENOTE THEIR RESPECTIVE HVAC UNITS.

G. PROVIDE TWO OPERATION AND MAINTENANCE MANUALS BOUND IN 8-1/2" X 11" PAGE BINDERS, TITLED "OPERATION AND MAINTENANCE MANUAL". SUBDIVIDE BINDER CONTENTS WITH PAGE DIVIDERS BY SYSTEM AND EQUIPMENT. INCLUDE ALL SHOP DRAWINGS, AS-BUILT DRAWINGS AND WARRANTIES. SUBMISSION OF THESE DOCUMENTS SHALL BE WITHIN 90 DAYS OF SYSTEM ACCEPTANCE, PER ENERGY CODE, AND A REQUIREMENT FOR FINAL PAYMENT.

TESTING, ADJUSTING, BALANCING AND INSPECTION

A. WORK SHALL BE PERFORMED AFTER THE COMPLETE INSTALLATION AND STARTUP OF ALL EQUIPMENT, DUCT SYSTEMS AND TEMPERATURE AND ENERGY MANAGEMENT CONTROLS AND COMPLETED PRIOR TO TURNOVER FOR THE START OF STOCKING.

B. CONTRACTOR SHALL SUBMIT TEST AND BALANCE REPORT TO GENERAL CONTRACTOR FOR SUBMITTAL TO TENANT'S PROJECT MANAGER AND LOCAL CODE AUTHORITY (IF REQUIRED).

C. TESTING AND BALANCING CONTRACTOR SHALL ALSO INSPECT THE COMPLETED AND OPERATIONAL HVAC EQUIPMENT, DUCT SYSTEMS AND TEMPERATURE AND ENERGY MANAGEMENT CONTROLS PRIOR TO TURNOVER OF THE STORE FOR THE START OF STOCKING. TESTING AND BALANCING CONTRACTOR SHALL SUBMIT THE COMPLETED TENANT'S HVAC FIELD INSPECTION REPORT TO THE GENERAL CONTRACTOR FOR SUBMITTAL TO TENANT'S PROJECT MANAGER FOR REVIEW.

RELEASE FOR CONSTRUCTION
AS NOTED ON PLANS REVIEW
LEES SUMMIT DEVELOPMENT SERVICES
LEES SUMMIT, MISSOURI
06/17/2020

CASCO
12 Sunnen Drive, Suite 100, St. Louis, MO 63143 T: 314.647.2400

MIDLAND

Starbucks & Medical Office

155 S.W. MO-150 HWY
LEE'S SUMMIT, MO 64802

CONSTR. DOC. & REVISIONS

No.	Description	Date
	Owner Review	05/12/20

CASCO DIVERSIFIED CORPERATION
PROFESSIONAL ENGINEERING
CERTIFICATE OF AUTHORITY #000613
EXP. 12/31/21

STATE OF MISSOURI
MICHAEL CHARLES GRAPPERHAUS
NUMBER PE-2008019543
PROFESSIONAL ENGINEER
6/17/20

PROFESSIONAL OF RECORD
MICHAEL C. GRAPPERHAUS
License NO.: PE-2008019543
Expiration Date: 12/31/20

Drawn By/Checked By:	BAM/MCG
Project Number	320488
Permit Date	06-17-20

MECHANICAL PLAN AND SPECIFICATIONS

M-1

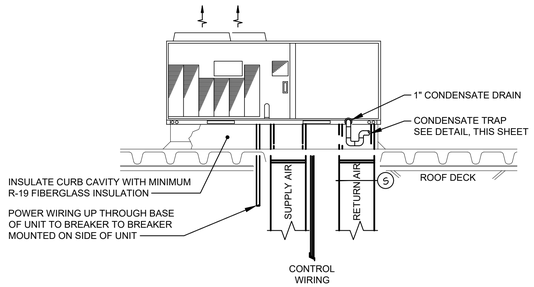

NOTE:
COORDINATE ALL ROOF PENETRATION REQUIREMENTS WITH LANDLORD'S ROOFING CONTRACTOR. UNITS SHALL BE INSTALLED LEVEL TO ENSURE PROPER CONDENSATE DRAINAGE.

1 MP2.0 TYPICAL ROOFTOP UNIT INSTALLATION

SCALE: NOT TO SCALE

ROOFTOP UNIT SCHEDULE (gas heat/elec. cool)

MARK	MFR./MODEL	DISCHARGE	TONS	ESP	CFM	OUTSIDE AIR CFM (MAX.)	ENTERING CONDITIONS	GROSS COOLING CAPACITY (MBH)		(S)EER	FUEL TYPE	HEATING CAPACITY (MBH)		SSE %	ELECTRICAL DATA			MCA/MOCP	APRX. UNIT WEIGHT (LBS.)	OPTIONS/ ACCESSORIES
								TOTAL	SENSIBLE			INPUT	OUTPUT		VOLTS	PHASE	FREQ.			
RTU-1	CARRIER 48HCED08A2	VERTICAL	7.5	1.00	3,000	750	80.4°F DB 65.8°F WB @ 96.4°F AMBIENT	90.2	73.5	12.0 EER	NATURAL GAS	180	148	82	208	3	60	41.0 / 50	1,228	1, 2, 3, 4, 5, 6, 7, 8, 9, 10.
RTU-2	CARRIER 48HCED11A2	VERTICAL	10.0	1.00	4,000	1000	80.4°F DB 65.8°F WB @ 96.4°F AMBIENT	116.1	93.8	12.0 EER	NATURAL GAS	224	184	82	208	3	60	54.0 / 60	1,427	1, 2, 3, 4, 5, 6, 7, 8, 9, 10.

OPTIONS/ACCESSORIES:
1) FACTORY INSTALLED MEDIUM STATIC BELT DRIVE.
2) FACTORY INSTALLED, FIELD WIRED DUAL ENTHALPY ECONOMIZER W/ BAROMETRIC RELIEF AND HOODS.
3) FACTORY INSTALLED LOUVERED HAIL GUARDS.
4) FACTORY INSTALLED, FIELD WIRED NON-FUSED DISCONNECT (REFER TO ELECTRICAL DRAWINGS FOR ADDITIONAL INFORMATION).
5) FACTORY INSTALLED, FIELD WIRED NON-POWERED CONVENIENCE OUTLET (REFER TO ELECTRICAL DRAWINGS FOR ADDITIONAL INFORMATION).
6) FACTORY FURNISHED, FIELD INSTALLED THRU THE BASE ELECTRICAL & THRU THE CURB GAS KIT.
7) FACTORY FURNISHED, FILED INSTALLED FLUE EXTENSION KIT.
8) CONTRACTOR FURNISHED, FIELD INSTALLED SLOPED ROOF CURB.
9) TENANT FURNISHED, FIELD INSTALLED/WIRED 7-DAY PROGRAMMABLE THERMOSTAT, WITH NIGHT SETBACK AND AUTO-CHANGEOVER (HONEYWELL RTH8500D OR EQUIVALENT).
10) CONTRACTOR FURNISHED, THREE (3) SETS OF PLEATED FILTERS (REFER TO SPECIFICATIONS ON SHEET M101 FOR ADDITIONAL INFORMATION).

NOTE:
CONTRACTOR SHALL BE RESPONSIBLE FOR ALL STARTUP AND WARRANTY WORK. VERIFY ELECTRICAL POWER PRIOR TO INSTALLING UNITS. FAILURE TO DO SO SHALL RESULT IN CONTRACTOR FURNISHING CORRECT UNITS OR POWER AT NO ADDITIONAL COST TO TENANT.

EQUIVALENT UNITS MAY BE PROVIDED. ACCEPTABLE ALTERNATIVE MANUFACTURERS ARE TRANE AND LENNOX.

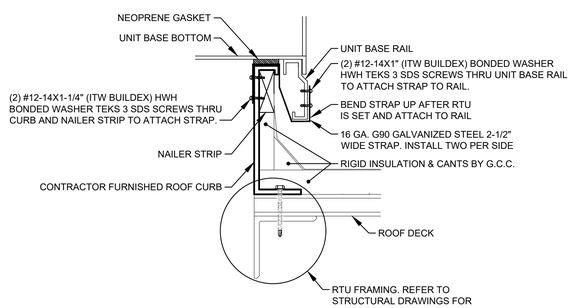

NOTE:
ROOF CURB ATTACHMENT TO STRUCTURE VARIES BY TYPE OF STRUCTURE AND BY REQUIREMENTS OF LOCAL CODE AUTHORITIES. CONTRACTOR SHALL VERIFY LOCAL REQUIREMENTS.

3 MP2.0 ROOFTOP UNIT CURB ATTACHMENT

SCALE: NOT TO SCALE

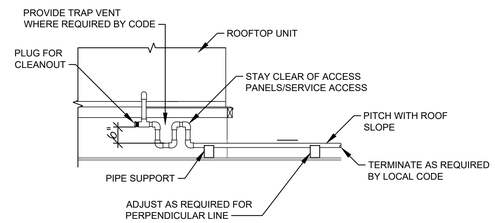

4 MP2.0 ROOFTOP UNIT CONDENSATE PIPING DETAIL

SCALE: NOT TO SCALE

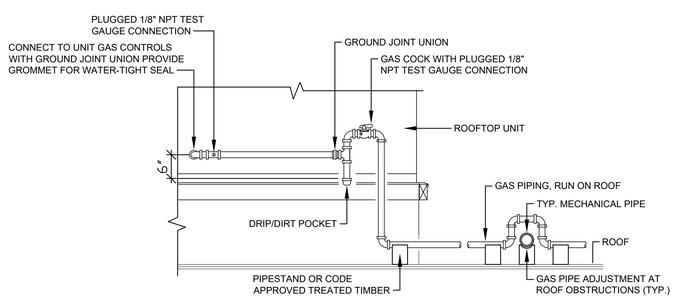

NOTES:
CONTRACTOR SHALL VERIFY ALL MECHANICAL GAS FIRED EQUIPMENT CONNECTION LOCATIONS IN THE FIELD PRIOR TO INSTALLING ANY GAS PIPE MAINS OR BRANCHES.

COORDINATE PIPING SUPPORTS WITH LANDLORD'S ROOFING CONTRACTOR.

5 MP2.0 ROOFTOP UNIT GAS PIPING DETAIL

SCALE: NOT TO SCALE

RELEASE FOR CONSTRUCTION
AS NOTED ON PLANS REVIEW
DEVELOPMENT SERVICES
LEE'S SUMMIT, MISSOURI
06/17/2020

CASCO
12 Sunnen Drive, Suite 100, St. Louis, MO 63143 T: 314.781.2777

MIDLAND

Starbucks & Medical Office

155 S.W. MO-150 HWY
LEE'S SUMMIT, MO 64802

CONSTR. DOC. & REVISIONS

No.	Description	Date
	Owner Review	05/12/20

CASCO DIVERSIFIED CORPERATION
PROFESSIONAL ENGINEERING
CERTIFICATE OF AUTHORITY #000613
EXP. 12/31/21

STATE OF MISSOURI
MICHAEL CHARLES GRAPPERHAUS
NUMBER PE-2008019543
PROFESSIONAL ENGINEER
6/17/20

PROFESSIONAL OF RECORD
MICHAEL C. GRAPPERHAUS
License NO.: PE-2008019543
Expiration Date: 12/31/20

Drawn By/Checked By:	BAM/MCG
Project Number	320488
Permit Date	06-17-20

MECHANICAL SCHEDULES AND DETAILS

M201

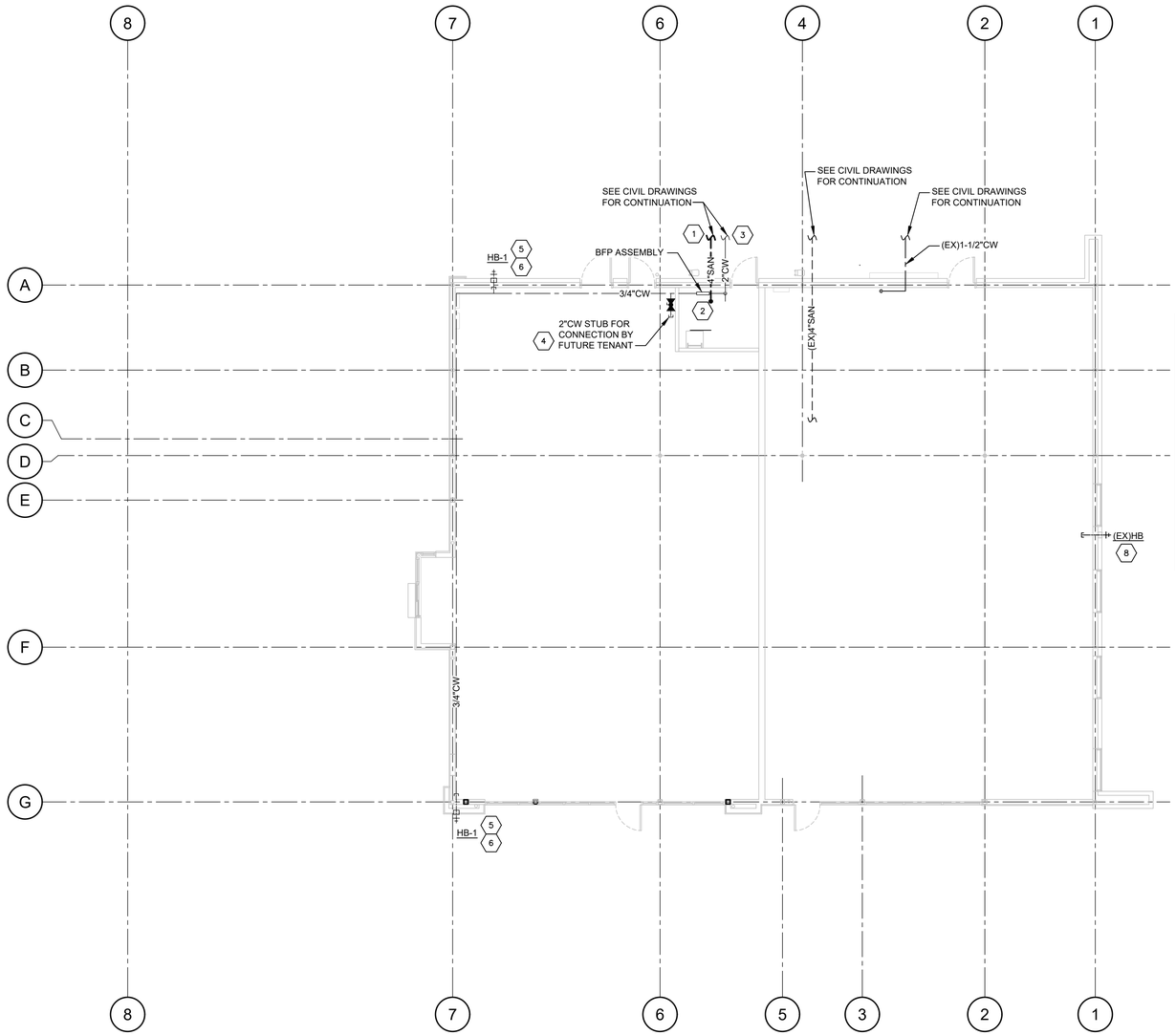

PLUMBING PLAN

NORTH

SCALE: 1/8" = 1'-0"

SYMBOLS LEGEND

GW	NEW GREASE WASTE STUB-IN
SS	NEW SANITARY STUB-IN
G	NEW NATURAL GAS STUB-IN
CW	NEW WATER STUB-IN (WITH GATE VALVE)
M	NEW GAS METER
EQUIPMENT/FIXTURE DESIGNATION	
KEYED NOTE	
REVISION NUMBER	
TYP.	TYPICAL
F.V.	FIELD VERIFY

PARTIAL PLAN AT DUMPSTERS

SCALE: NOT TO SCALE

SPECIFICATIONS

GENERAL CONDITIONS

1. THE GENERAL AND SPECIAL CONDITIONS OF THE ARCHITECTURAL SPECIFICATIONS SHALL BE INCLUDED AS PART OF THESE DOCUMENTS.
2. ALL MATERIALS SHALL BE NEW, UNUSED, AND THE BEST OF THEIR RESPECTIVE KINDS AND FREE FROM DEFECTS.
3. THE CONTRACTOR SHALL PAY ALL FEES, GIVE ALL NOTICES, FILE ALL NECESSARY DRAWINGS AND OBTAIN ALL PERMITS AND CERTIFICATES OF APPROVAL REQUIRED IN CONNECTION WITH ALL WORK UNDER THIS CONTRACT. ALL WORK SHALL BE FURNISHED AND INSTALLED IN FULL ACCORDANCE WITH ALL LOCAL LAWS, ORDINANCES, RULES AND REGULATIONS.
4. DRAWINGS ARE DIAGRAMMATIC ONLY, INTENDING TO SHOW GENERAL RUNS AND LOCATIONS OF THE WORK AND ARE NOT INTENDED TO BE RIGID IN SPECIFIC DETAIL.
5. THE CONTRACTOR SHALL BE HELD TO HAVE EXAMINED THE SITE FOR HIS WORK BEFORE HAVING SUBMITTED HIS PROPOSAL. NO ADDITIONAL COMPENSATION WILL BE ALLOWED FOR CONDITIONS FOUND DURING THE COURSE OF THE CONTRACT.
6. THE CONTRACTOR SHALL VERIFY ALL MEASUREMENTS AT THE SITE AND BE RESPONSIBLE FOR THE CORRECTNESS OF THE SAME.
7. THE CONTRACTOR SHALL COORDINATE THE INSTALLATION OF HIS WORK WITH LIGHTING PLANS, REFLECTED CEILING PLANS, SPRINKLER PLANS AND ALL OTHER TRADES.
8. THE INSTALLATION OF ALL EQUIPMENT AND MATERIALS REQUIRING ACCESS SHALL BE MADE IN SUCH MANNER AS TO MAKE THE EQUIPMENT AND MATERIALS READILY ACCESSIBLE FOR OPERATION, MAINTENANCE AND REPAIRS.
9. STORAGE OF CONSTRUCTION EQUIPMENT AND MATERIALS SHALL BE ONLY IN DESIGNATED SPACES.
10. CONSTRUCTION DEBRIS AND RUBBISH GENERATED BY THE CONTRACTOR SHALL BE REMOVED FROM PREMISES AS OFTEN AS NECESSARY OR AS DIRECTED TO MAINTAIN A CLEAN AND WORKABLE AREA.
11. ALL WORK AND EQUIPMENT SHALL BE FULLY GUARANTEED FOR ONE (1) YEAR FROM THE DATE OF FINAL PAYMENT AND ACCEPTANCE.
12. ALL WORK AND EQUIPMENT WITHIN THE CONTRACT AREA FURNISHED AND INSTALLED UNDER THIS CONTRACT SHALL BE CLEANED TO THE SATISFACTION OF THE OWNER BEFORE TURNING SAME OVER TO THE OWNER.
13. CONNECT NEW WORK TO EXISTING IN A NEAT AND APPROVED MANNER.
14. ALL DESIGN SHALL INCORPORATE CURRENT ASHRAE METHODS.

PLUMBING SPECIFICATIONS

1. SUPPLY PIPING SHALL BE TYPE "L" COPPER INSTALLED WITH LEADLESS SOLDER. CONDENSATE PIPING ON ROOF SHALL BE COPPER OR PVC. COLD WATER SUPPLY PIPING SHALL BE INSULATED WITH A MINIMUM 1/2" FIBERGLASS WITH VAPOR PROOF ALL SERVICE JACKET OR EQUIVALENT CLOSED CELL FOAM INSULATION, AS ALLOWED BY LOCAL CODES, FOR INSTALLATION IN RETURN AIR PLENUMS. NATURAL GAS PIPE 2" AND SMALLER SHALL BE THREADED SCHEDULE 40 THICKNESS (ANSI B36.10) BLACK STEEL FINISHED WITH RUST INHIBITIVE PRIMER AND PAINT.
2. HANGERS, SUPPORTS AND SLEEVES
   - A. THE CONTRACTOR SHALL BE RESPONSIBLE FOR ALL PIPING SUPPORTS, HANGERS AND METHODS FOR ATTACHMENT TO WALLS AND PARTITIONS.
   - B. ALL DRAIN, WASTE, HOT AND COLD WATER AND NATURAL GAS PIPING EXPOSED, ABOVE GRADE AND IN FURRED AREAS, SHALL BE SUPPORTED IN PLACE WITH SECURELY FASTENED SOLID PIPE HANGERS NOT OVER 8'-0" APART, AND AT EACH CHANGE IN DIRECTION (5'-0" ON CAST IRON PIPE).
   - C. PIPE HANGERS SHALL BE INSTALLED AROUND THE OUTSIDE OF INSULATION WITH VAPOR BARRIERS, AND INSULATION SHALL BE PROTECTED AGAINST CRUSHING BY SHEET METAL JACKET OF PROPER AREA AND WEIGHT.
   - D. ALL WATER PIPING RUNNING THROUGH FLOORS OR WALLS SHALL BE ISOLATED FROM THE PENETRATION WITH A SLEEVE. MAINTAIN THE FIRE RATING OF ALL WALL AND FLOOR PENETRATIONS BY USE OF APPROVED FIRE STOP MATERIALS.
   - E. SLEEVES THROUGH WALLS SHALL BE CUT SO AS TO BE FLUSH WITH THE FINISHED SURFACE OF THE WALL, IN EACH CASE, AND SHALL BE MADE WATERTIGHT.
3. CONTRACTOR SHALL VERIFY ALL DIMENSIONS, SPACES AND CONDITIONS PRIOR TO FABRICATION AND INSTALLATION OF EQUIPMENT AND MATERIAL.
4. CONTRACTOR SHALL GUARANTEE ALL WORK FREE FROM DEFECTS OF WORKMANSHIP AND/OR MATERIAL FOR A PERIOD OF ONE (1) YEAR FROM DATE OF ACCEPTANCE.
5. DIELECTRIC UNIONS SHALL BE PROVIDED WHEREVER DISSIMILAR METALS ARE JOINED.

KEYED NOTES

1. EXTEND NEW 4" SANITARY LINE TO CONNECTION WITH SANITARY BY CIVIL. SEE CIVIL FOR INVERT ELEVATION, YARD CLEANOUT, AND CONTINUATION BEYOND 5'-0" FROM THE EXTERIOR FACE OF THE BUILDING.
2. EXTEND NEW 4" SANITARY STUB 5'-0" INSIDE THE BUILDING SHELL. CONTRACTOR SHALL TEMPORARILY CAP SANITARY STUB-IN FOR FUTURE CONNECTION BY TENANT.
3. EXTEND NEW 2" DOMESTIC WATER FROM NEW WATER METER (SEE CIVIL FOR LOCATION). ROUTE RISER TIGHT TO INSIDE OF EXTERIOR WALL, AND EXTEND PIPING UP TO 14'-0" ABOVE FINISHED FLOOR.
4. PROVIDE BALL SHUT-OFF VALVE IN CEILING SPACE AND TEMPORARILY CAP 2" WATER LINE WITHIN 5'-0" INSIDE THE BUILDING SHELL FOR FUTURE CONNECTION BY TENANT. DO NOT ROUTE WATER PIPING ABOVE ELECTRICAL EQUIPMENT - VERIFY IN FIELD.
5. INSTALL HOSE BIBB (HB-1) AT 24" ABOVE GRADE. PROVIDE 3/4" CW LINE TO HB-1.
6. HB-1: HOSE BIB / WALL HYDRANT: WOODFORD # B65 ANTI-CONTAMINATION, NON-FREEZE WITH COVER PLATE. PROVIDE IN FINISH MOST CLOSELY MATCHED TO EXTERIOR WALL COLOR. ENSURE LANDLORD HAS KEYS TO REMOVE COVER PLATE AT PROJECT COMPLETION.
7. HB-2: HOSE BIB / YARD HYDRANT: WOODFORD #Y2 AUTOMATIC DRAINING, FREEZELESS YARD HYDRANT WITH BACKFLOW PREVENTER FOR FUTURE CONNECTION BY TENANT. INSTALL PER MANUFACTURER'S INSTRUCTIONS AT FRONT CORNER OF DUMPSTER ENCLOSURE, CLEAR OF ANY CONFLICTS WITH TRAFFIC OR GATE OPERATION (SEE CIVIL AND/OR FIELD VERIFY). ENSURE PROPER INSULATION, BURY DEPTH, ETC. FOR LOCAL CONDITIONS IS PROVIDED. POSITION UNIT SO THAT HOSE ATTACHMENT FACES AWAY FROM DUMPSTER ENCLOSURE WITHOUT IMPEDING OPERATION OF FLOW LEVER.
8. MAINTAIN EXISTING HOSE BIBB FOR FUTURE TENANT.

CIVIL ENGINEERING DESIGN COORDINATION NOTICE

NOTICE TO ALL PARTIES HAVING AN INTEREST IN THIS CONSTRUCTION PROJECT

1.) CONTRACTORS RELYING ON DOCUMENTS NOT COORDINATED WITH THE CIVIL ENGINEERING WORK SHALL DO SO AT THEIR OWN RISK.

2.) COORDINATION WITH THE CIVIL ENGINEERING DOCUMENTS HAS BEEN COMPLETED ONLY AS SHOWN BELOW.

CIVIL ENGINEERING CONSULTANT IS: CASCO CIVIL
ST. LOUIS, MO

CIVIL SHT. DWG. NO.	CIVIL SHEET DWG. TITLE	REV. NO.	REV. DATE	REV. NO.	REV. DATE	REV. NO.	REV. DATE
C0.0	COVER						
C1.0	DEMOLITION PLAN						
C2.0	SITE AND UTILITY PLAN						
C3.0	GRADING PLAN						
C4.0	SITE DETAILS						
C5.0	EROSION & SEDIMENT CONTROL PLAN						
C5.1	EROSION & SEDIMENT CONTROL DETAILS						

COORDINATION CHECKED BY DISCIPLINE:	INITIAL	DATE	INITIAL	DATE	INITIAL	DATE

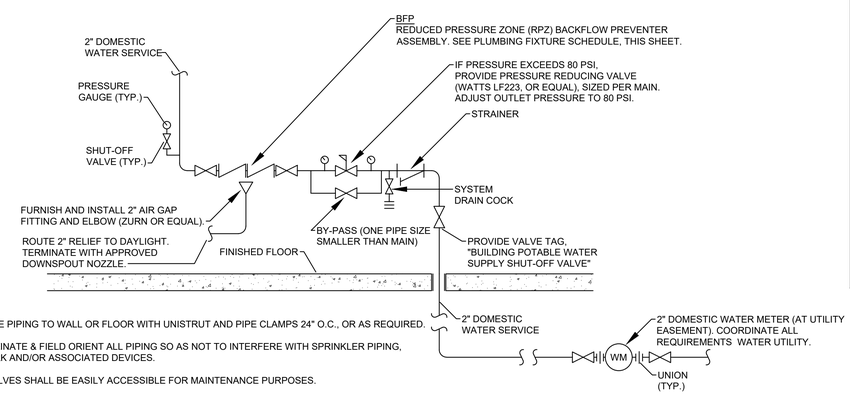

NOTES:

1. SECURE PIPING TO WALL OR FLOOR WITH UNISTRUT AND PIPE CLAMPS 24" O.C., OR AS REQUIRED.
2. COORDINATE & FIELD ORIENT ALL PIPING SO AS NOT TO INTERFERE WITH SPRINKLER PIPING, DUCTWORK AND/OR ASSOCIATED DEVICES.
3. ALL VALVES SHALL BE EASILY ACCESSIBLE FOR MAINTENANCE PURPOSES.

DOMESTIC WATER SERVICE ENTRANCE

SCALE: NOT TO SCALE

RELEASE FOR CONSTRUCTION
AS NOTED ON PLANS REVIEW
DEVELOPMENT SERVICES
LEE'S SUMMIT, MISSOURI
06/17/2020

CASCO
12 Sunnen Drive, Suite 100, St. Louis, MO 63143 T: 314.645.2...
MIDLAND

Starbucks & Medical Office

155 S.W. MO-150 HWY
LEE'S SUMMIT, MO 64802

CONSTR. DOC. & REVISIONS

No.	Description	Date
	Owner Review	05/12/20

CASCO DIVERSIFIED CORPERATION
PROFESSIONAL ENGINEERING
CERTIFICATE OF AUTHORITY #000613
EXP. 12/31/21

STATE OF MISSOURI
MICHAEL CHARLES GRAPPERHAUS
NUMBER PE-2008019543
PROFESSIONAL ENGINEER
6/17/20

PROFESSIONAL OF RECORD
MICHAEL C. GRAPPERHAUS
License NO.: PE-2008019543
Expiration Date: 12/31/20

Drawn By/Checked By:	BAM/MCG
Project Number	320488
Permit Date	06-17-20

PLUMBING PLAN

P101

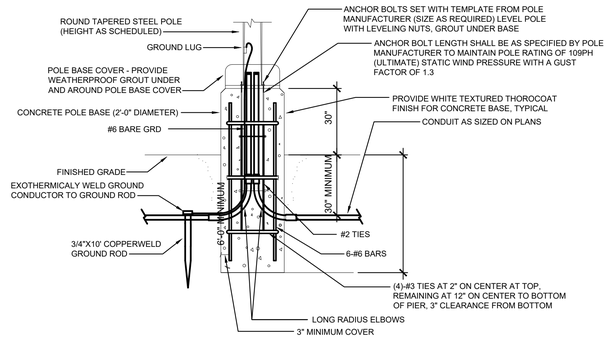

SITE POLE GENERAL NOTES:

1. AT EACH POLE LOCATION, PROVIDE A 3/4 "X10' COPPER CLAD GROUND ROD CONNECTED BY A #6 BARE COPPER CONDUCTOR INTO THE GROUND LUG.
2. FURNISH WITH HAND HOLE AND GROUNDED COVER. POLES SHALL BE RATED FOR 109 MPH (ULTIMATE) (115 MILES PER HOUR) WIND. POLES SHALL BE PLUMBED PERFECTLY VERTICAL.

2 / E101 **LIGHT POLE DETAIL**

SCALE: NOT TO SCALE

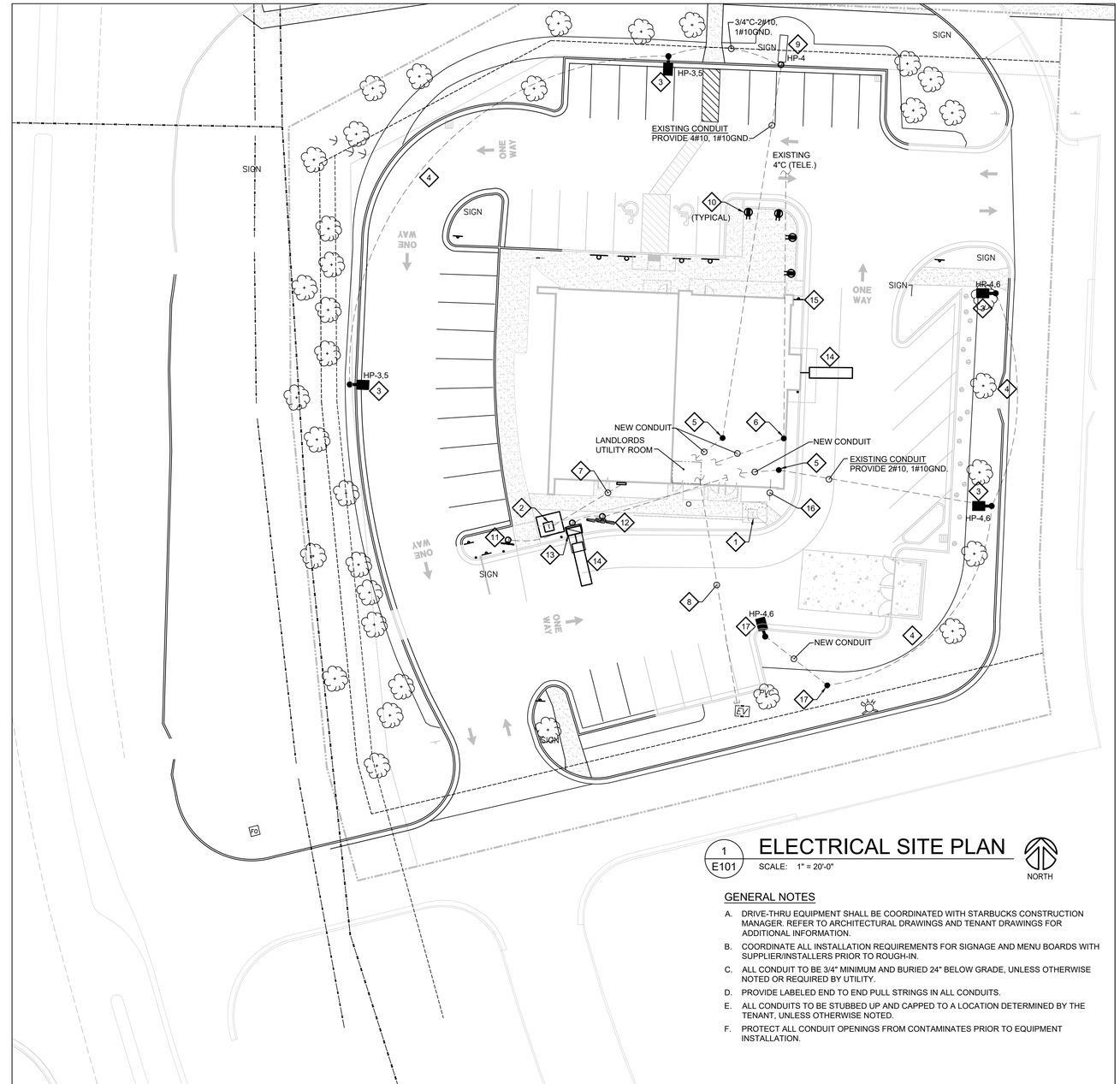

1 / E101 **ELECTRICAL SITE PLAN**

SCALE: 1" = 20'-0"

NORTH

GENERAL NOTES

A. DRIVE-THRU EQUIPMENT SHALL BE COORDINATED WITH STARBUCKS CONSTRUCTION MANAGER. REFER TO ARCHITECTURAL DRAWINGS AND TENANT DRAWINGS FOR ADDITIONAL INFORMATION.
B. COORDINATE ALL INSTALLATION REQUIREMENTS FOR SIGNAGE AND MENU BOARDS WITH SUPPLIER/INSTALLERS PRIOR TO ROUGH-IN.
C. ALL CONDUIT TO BE 3/4" MINIMUM AND BURIED 24" BELOW GRADE, UNLESS OTHERWISE NOTED OR REQUIRED BY UTILITY.
D. PROVIDE LABELED END TO END PULL STRINGS IN ALL CONDUITS.
E. ALL CONDUITS TO BE STUBBED UP AND CAPPED TO A LOCATION DETERMINED BY THE TENANT, UNLESS OTHERWISE NOTED.
F. PROTECT ALL CONDUIT OPENINGS FROM CONTAMINATES PRIOR TO EQUIPMENT INSTALLATION.

KEYED NOTES

1. EXISTING UTILITY TRANSFORMER TO BE REMOVED.
2. NEW UTILITY TRANSFORMER TO BE PROVIDED BY UTILITY COMPANY. COORDINATE LOCATION WITH UTILITY PRIOR TO BID. REFER TO DETAIL 1/E301 FOR MORE INFORMATION.
3. EXISTING SITE LIGHT POLE PROVIDE NEW LIGHT FIXTURE TO REPLACE EXISTING LIGHT FIXTURE. EXISTING POLE AND BASE ARE TO REMAIN. RE-CIRCUIT EXISTING UNDERGROUND FEEDERS AS SHOWN, REPAIRING AND REPLACING THE FEEDERS AS NEEDED.
4. ASSUMED EXISTING BRANCH CIRCUIT TO REMAIN.
5. RETRIEVE EXISTING BRANCH CIRCUIT HOMERUN (HOMERUN LOCATION TO BE FIELD VERIFIED), EXTEND TO AND MERGE EXISTING WITH NEW AND ROUTE TO NEW TIMECLOCK HOUSE PANEL "HP". NEW BRANCH CIRCUIT WIRES WILL NEED TO BE PROVIDED (#10 AWG. CU. MIN.),
6. RETRIEVE EXISTING 4"C FOR TELE. SERVICE - EXTEND TO AND CONNECT NEW CONDUIT TO EXISTING. THIS IS THE LOCATION OF THE EXISTING TELE DEMARK.
7. ELECTRIC UTILITY EXTEND CONDUIT AND FEEDER TO CT CABINET, METER, AND DISCONNECT. COORDINATE LOCATIONS WITH CIVIL DRAWINGS. REFER TO DETAIL 1/E301 FOR MORE INFORMATION.
8. DATA PROVIDE (1) 2" EMPTY CONDUIT. FOR BROADBAND CABLING (WITH LABELED PULL STRINGS). COORDINATE EXACT ROUGH-IN LOCATIONS WITH CIVIL DRAWINGS. CONDUIT TO BE ROUTED UP EXTERIOR WALL AND TERMINATED IN JOIST SPACE. WIRING TO BE PROVIDED BY TENANTS CONTRACTOR PER TENANT DRAWINGS.
9. EXISTING TO REMAIN MONUMENT SIGN - REROUTE HOMERUN TO PANEL "HP"
10. PATIO RECEPTACLE PROVIDE WEATHER PROOF, GFI DUPLEX RECEPTACLE. CONNECT TO CIRCUIT SBA-11.
11. PRE-MENU BOARD ROUGH-IN ROUTE (2) 1" CONDUIT FROM PRE-MENU TO PANEL "SBA". ROUTE 1" CONDUIT FROME PRE-MENU TO DOS (DIGITAL ORDER SCREEN) / DCB (DIGITAL CIRCUIT BOX) LOCATION. PROVIDE LABELED PULL STRINGS.
12. MENU BOARD ROUGH-IN ROUTE (2) 1" CONDUIT FROM MENU TO PANEL "SBA". ROUTE 1" CONDUIT FROME MENU TO DOS (DIGITAL ORDER SCREEN) / DCB (DIGITAL CIRCUIT BOX) LOCATION. PROVIDE LABELED PULL STRINGS.
13. ORDER POINT ROUGH-IN ROUTE (2) 1" CONDUITS FROM DOS / DCB TO DRIVE-THROUGH WINDOW BUMP ALONG EXTERIOR OF BUILDING 18" BELOW GRADE. TERMINATE INSIDE SOUTH WALL OF DT BUMP. ROUTE (1) 1" CONDUIT FROM DOS / DCB TO INSIDE BUILDING CLOSE TO ELECTRICAL PANEL. PROVIDE LABELED PULL STRINGS FOR ALL CONDUITS.
14. LOOP DETECTOR IN CONDUIT TO BE INSTALLED IN 1/4" WIDE BY 2" DEEP SAW CUT SLOT. ROUTE 1" CONDUIT FROM LOOP DETECTOR TO DRIVE THROUGH WINDOW. COORDINATE LOCATION WITH TENANT CONSTRUCTION MANAGER PRIOR TO ROUGH-IN.
15. DIRECTIONAL SIGN ROUGH-IN PROVIDE 1-1/2" EMPTY CONDUIT WITH PULL WIRE WITH LABELED PULL STRINGS. EXTEND THE CONDUIT TO 4" ABOVE GRADE. ENTER THE BUILDING WITH (1) 1-1/2" CONDUIT AS CLOSE TO THE ELECTRICAL PANEL AS POSSIBLE. COORDINATE EXACT ROUGH-IN LOCATIONS WITH CIVIL DRAWINGS. WIRING TO BE PROVIDED BY TENANTS CONTRACTOR PER TENANT DRAWINGS.
16. SPARE CONDUIT PROVIDE 1" CONDUIT TO BE RUN THROUGH FOUNDATION WALL OUT REAR OF BUILDING, CAPPED AND TERMINATED ABOVE CEILING. VERIFY LOCATIONS FOR STUB-UP WITH TENANT'S REPRESENTATIVE PRIOR TO ROUGH-IN.
17. RELOCATED LIGHTING POLE WITH NEW LUMINAIRE HEAD, EXTEND TO AND EXISTING BRANCH CIRCUIT TO NEW AS SHOWN. PROVIDE 2#10, 1#10 GND. MATCH EXISTING CONDUIT SIZE. REFER TO DETAIL 2/E101 FOR MORE INFORMATION.

RELEASE FOR CONSTRUCTION
AS NOTED ON PLANS REVIEW
DEVELOPMENT SERVICES
LEE'S SUMMIT, MISSOURI
06/17/2020

CASCO
12 Sunnen Drive, Suite 100, St. Louis, MO 63143 T: 314.781.2777
MIDLAND

Starbucks & Medical Office

155 S.W. MO-150 HWY
LEE'S SUMMIT, MO 64802

CONSTR. DOC. & REVISIONS

No.	Description	Date
	Owner Review	05/12/20
	Owner Review 2	06/04/20
1	City Comments	06/30/20

CASCO DIVERSIFIED CORPERATION PROFESSIONAL ENGINEERING CERTIFICATE OF AUTHORITY #000613 EXP. 12/31/21

HARRY J. AUMAN
LIC. #E16827
EXP. 12/31/20

Drawn By/Checked By:	EAV/DAW
Project Number	320488
Permit Date	06-17-20

ELECTRICAL SITE PLAN

E101

Statistics

Description	Symbol	Avg	Max	Min	Max/Min	Avg/Min
Property Line	+	0.0 fc	0.3 fc	0.0 fc	N/A	N/A
Site Calculation	+	2.1 fc	12.2 fc	0.2 fc	61.0:1	10.5:1

Schedule

Symbol	Label	Quantity	Manufacturer	Catalog Number	Description	Lamp	Number Lamps	Filename	Lumens Per Lamp	Light Loss Factor	Wattage
	A	5	Lithonia Lighting	DSX0 LED P6 40K BLC MVOLT	DSX0 LED P6 40K BLC MVOLT	LED	1	DSX0_LED_P6_40K_BLC_MVOLT (1).ies	13089	1	134
	B	6	Lithonia Lighting	DSXW1 LED 20C 350 30K T2M MVOLT	DSXW1 LED WITH (2) 10 LED LIGHT ENGINES, TYPE T2M OPTIC, 3000K, @ 350mA.	LED	1	DSXW1_LED_20C_350_30K_T2M_MVOLT.ies	2688	1	23.3
	C	7	Lithonia Lighting	OLLWU LED P1 40K 120 DDB	OUTDOOR LED WALL CYLINDER UP & DOWN LIGHT	LED	1	OLLWU_LED_P1_40K_120_DDB.ies	1086	1	13.8
	D	5	COOPER LIGHTING SOLUTIONS - BRAND (FORMERLY EATON)	LD6B10D010 EU6B10208030 6LBWMW1	PORTFOLIO 6 INCH 60 DEGREE CUTOFF RECESSED DOWNLIGHT WIDE DISTRIBUTION WITH MATTE WHITE TRIM WATTAGE D010TR-10.05 W DE010-10.58 W D5LT-10.2 W DMX-10.6 W DL2-11.8 W DL3-11.1 W DLE-11.39 W	HIGH LUMEN LED ABSOLUTE PHOTOMETRY IS BASED ON CALIBRATION FACTORS CREATED USING LAB LUMEN STANDARDS IN GONIOPHOTOMETER WITH TEST DISTANCE OF 28.75 FEET	1	LD6B10D010 EU6B10208030 6LBWMW1.ies	1004	1	9.9

Plan View
Scale - 1" = 20ft

RELEASE FOR CONSTRUCTION
AS NOTED ON PLANS REVIEW
DEVELOPMENT SERVICES
LEE'S SUMMIT, MISSOURI
06/17/2020

CASCO
12 Sunnen Drive, Suite 100, St. Louis, MO 63143 T: 314.781.2777

MIDLAND

Starbucks & Medical Office

155 S.W. MO-150 HWY
LEE'S SUMMIT, MO 64802

CONSTR. DOC. & REVISIONS

No.	Description	Date
	Owner Review	05/12/20
	Owner Review 2	06/04/20
DP	DEVELOPMENT PLAN RESPONSE	06/17/20

CASCO DIVERSIFIED CORPERATION PROFESSIONAL ENGINEERING CERTIFICATE OF AUTHORITY #000613 EXP. 12/31/21

6/17/20

HARRY J. AUMAN
LIC. #E16827
EXP. 12/31/20

Drawn By/Checked By: EAV/DAW
Project Number 320488

Permit Date 06-17-20

SITE PHOTOMETRICS

E102

Sheet Notes

1. ELECTRICAL UTILITY SEE DETAIL 1/E301.
2. FUTURE BUILDING SIGNS MOUNT J-BOX INSIDE BUILDING AND PROVIDE 3/4" MC THROUGH WALL FOR POWER SUPPLY OF FUTURE BUILDING SIGNAGE. COORDINATE EXACT LOCATION AND REQUIREMENTS WITH ARCHITECTURAL ELEVATIONS AND TENANT INFILL DRAWINGS.
3. DRIVE THRU WINDOW MOUNT 36" ON THE INSIDE AFF AND 42" ON THE OUTSIDE MEASURED FROM DRIVE-THRU LANE. COORDINATE LOCATION WITH GENERAL CONTRACTOR PRIOR TO INSTALLATION.
4. HOLIDAY LIGHTING PROVIDE EXTERIOR J-BOX ON ROOF-SIDE FACE OF PARAPET ABOVE ROOF FLASHING WITH 3/4" EMPTY CONDUIT DOWN INSIDE WALL TO CEILING WITH PULL STRING LABELED HOLIDAY LIGHTING.
5. FLY FAN MOUNT BOTTOM OF FIXTURE AT 7'-6" AFF. ROUTE 1/2" C CONDUIT WITH LABELED PULL STRING TO PANEL "SBA". FEEDER TO BE PROVIDED BY TENANT'S GENERAL CONTRACTOR.
6. RTU - FACTORY INSTALLED, FIELD WIRED NON-FUSED DISCONNECT AND GFI, WEATHERPROOF RECEPTACLE.
7. RETRIEVE EXISTING 4"C FOR TELE. SERVICE, EXTEND TO AND CONNECT NEW CONDUIT WITH EXISTING.
8. PATIO FAN VERIFY MOUNTING HEIGHT AND LOCATION WITH TENANT CONSTRUCTION MANAGER PRIOR TO ROUGH-IN.

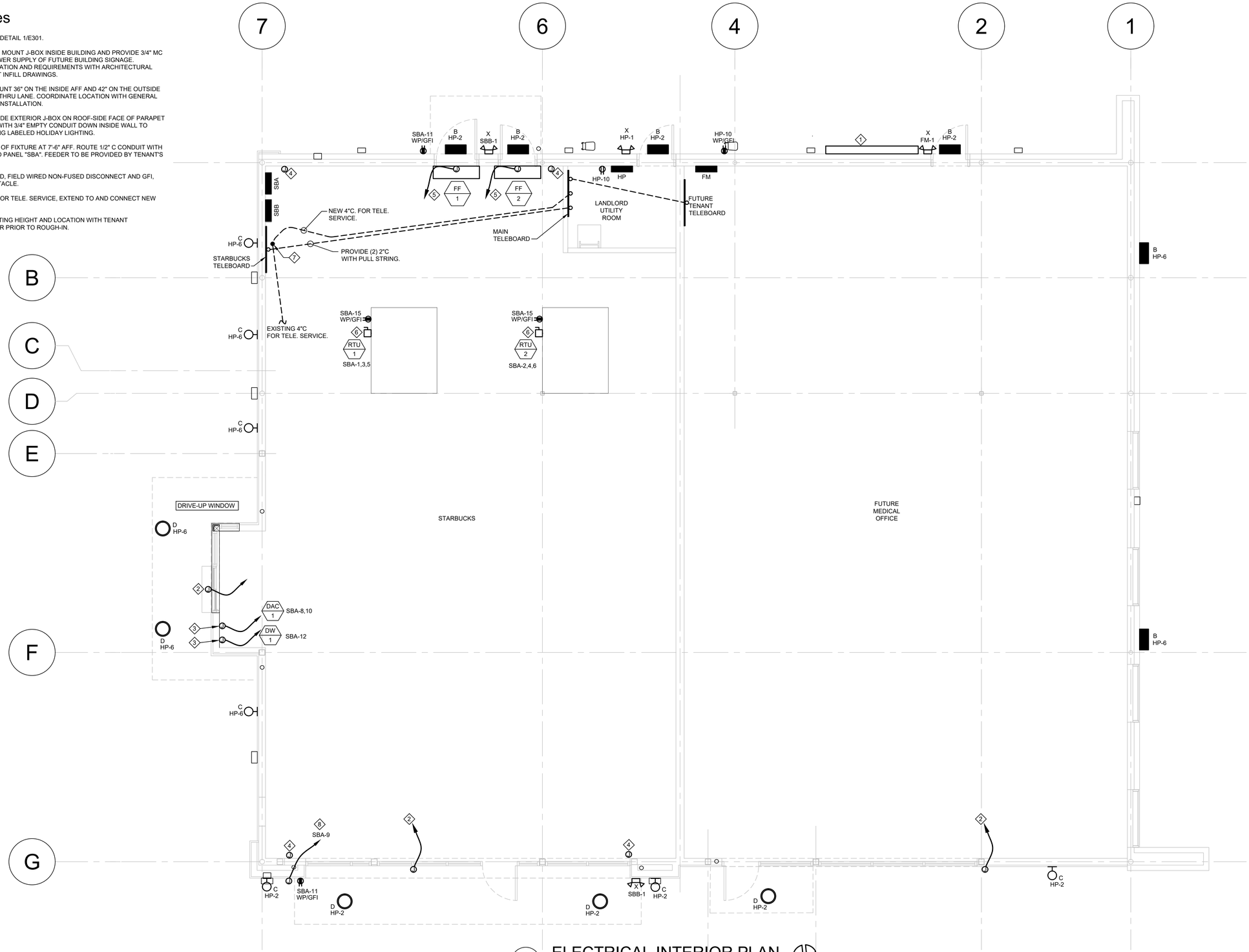

1 E201 ELECTRICAL INTERIOR PLAN

SCALE: 1/4" = 1'-0"

NORTH

RELEASE FOR CONSTRUCTION
AS NOTED ON PLANS REVIEW
DEVELOPMENT SERVICES
LEE'S SUMMIT, MISSOURI
06/17/2020

CASCO
12 Sunnen Drive, Suite 100, St. Louis, MO 63143 T: 314.781.2777

MIDLAND

Starbucks & Medical Office

155 S.W. MO-150 HWY
LEE'S SUMMIT, MO 64802

CONSTR. DOC. & REVISIONS

No.	Description	Date
	Owner Review	05/12/20
	Owner Review 2	06/04/20

CASCO DIVERSIFIED CORPERATION PROFESSIONAL ENGINEERING CERTIFICATE OF AUTHORITY #000613 EXP. 12/31/21

6/17/20

HARRY J. AUMAN
LIC. #E16827
EXP. 12/31/20

Drawn By/Checked By:	EAV/DAW
Project Number	320488
Permit Date	06-17-20

ELECTRICAL INTERIOR PLAN

E201

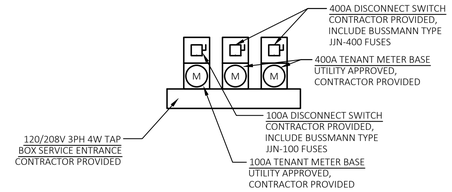

2 / E301 ENLARGED SERVICE ENTRANCE

SCALE: NOT TO SCALE

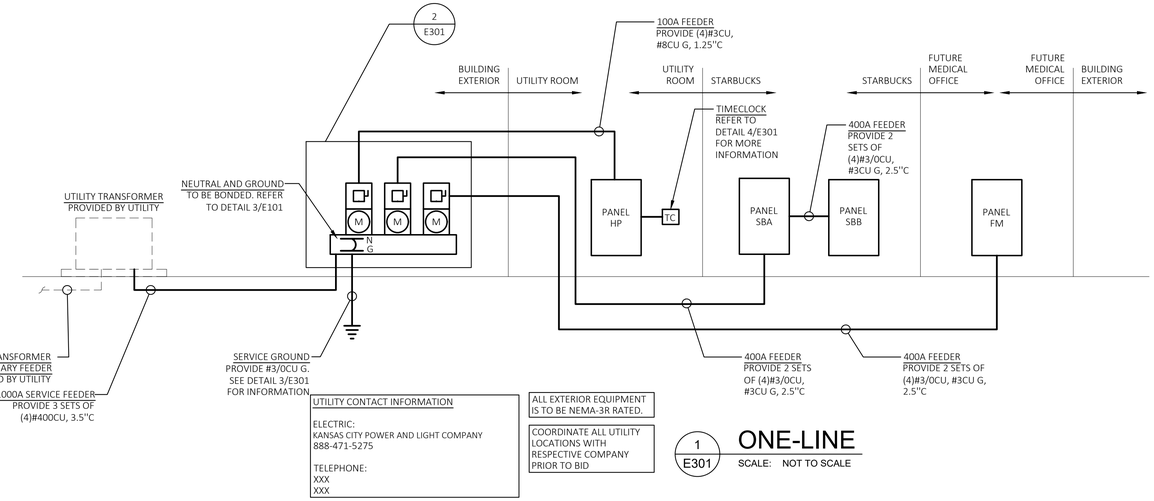

UTILITY CONTACT INFORMATION

ELECTRIC:
KANSAS CITY POWER AND LIGHT COMPANY
888-471-5275

TELEPHONE:
XXX
XXX

ALL EXTERIOR EQUIPMENT IS TO BE NEMA-3R RATED.

COORDINATE ALL UTILITY LOCATIONS WITH RESPECTIVE COMPANY PRIOR TO BID

1 / E301 ONE-LINE

SCALE: NOT TO SCALE

GENERAL GROUNDING NOTES

A. FULL SIZE GROUND MEANS THAT GROUND CONNECTOR SIZE SHALL BE AS SHOWN ON SERVICE EQUIPMENT ON THE POWER RISER DIAGRAM.

B. AFTER GROUNDING SYSTEM IS INSTALLED, GROUND RESISTANCE SHALL BE MEASURED, TO ASSURE THAT GROUND VALUE OF 15 OHM MAXIMUM RESISTANCE IS ACHIEVED. IF NOT, ADDITIONAL GROUNDING SHALL BE PROVIDED TO MEET THE SPECIFIC VALUE.

C. ALL CONNECTIONS TO GROUND RODS SHALL BE EXOTHERMIC WELD CONNECTIONS

D. WHERE LOCATED OUTSIDE OF BUILDING, TOP OF GROUND ROD SHALL BE 12" (MINIMUM) BELOW GRADE. PROVIDE NON-METALIC INSPECTION WELL WITH REMOVABLE COVER.

E. GROUND CONNECTOR SHALL BE LOCATED WITHIN OR NEAR BOTTOM OF CONCRETE FOUNDATION OR FOOTING THAT IS IN DIRECT CONTACT WITH THE EARTH, AND SHALL CONSIST OF AT LEAST 20 FEET OF ONE OR MORE STEEL REINFORCING BARS OR RODS OF NOT LESS THAN 1/2 INCH DIAMETER OR OF AT LEAST 20 FEET OF BARE COPPER CONDUCTOR.

F. SEE THE RISER DIAGRAM DETAIL 1/E301 FOR THE SIZE OF THE MAIN BONDING JUMPER AND BARE COPPER GROUNDING ELECTRODE CONDUCTORS.

G. NOT ALL GROUNDING OPTIONS MAY APPLY. CONTRACTOR TO VERIFY AVAILABLE GROUNDING METHODS.

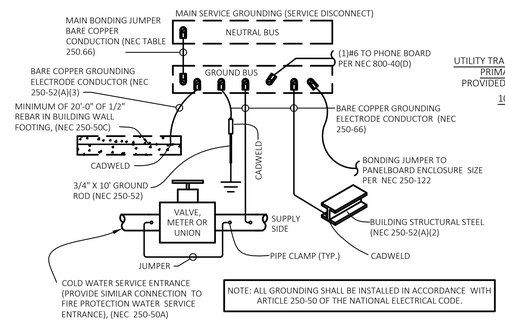

NOTE: ALL GROUNDING SHALL BE INSTALLED IN ACCORDANCE WITH ARTICLE 250-50 OF THE NATIONAL ELECTRICAL CODE.

3 / E301 GROUNDING DETAIL

SCALE: NOT TO SCALE

LIGHTING FIXTURE SCHEDULE

PLAN MARK	MANUFACTURER	CATALOG NO.	LAMP DATA **	LAMP DATA NO.	LAMP DATA WATTAGE & LAMPS	REMARKS AND MOUNTING HEIGHT TO BOTTOM OF LIGHT FIXTURE	WATTS PER FIXTURE	FIXTURE QUANTITY
A	LITHONIA	DSX0 LED-P6-40K-BLC-208-RPA--DDB			LED FURNISHED WITH FIXTURE	13" W x 26" L x 7" H HEAD MOUNTED ON A EXISTING 28' TALL ROUND POLE, 70 CRI, 4000K, 13090 LUMENS, WET LOCATION LISTED. COORDINATE POLE DRILL HOLES WITH THE EXISTING POLES	134	5
B	LITHONIA	DSXW1 LED-20C-530-30K-T2M-MVOLT-DDBXD			LED FURNISHED WITH FIXTURE	14" W x 7" H x 10" D WALL PACK, 70CRI, 3000K, 3887 LUMENS, SURFACE MOUNTED 8'-0" AFF TO BOTTOM OF FIXTURE UNLESS OTHERWISE NOTED.	36	6
C	LITHONIA	OLLWU LED-P1-40K-MVOLT-DDB			LED FURNISHED WITH FIXTURE	5" W x 10" H x 4" D WALL SCONCE, UP AND DOWN LIGHT, 70CRI, 4000K, 947 LUMENS, SURFACE MOUNTED 8'-0" AFF TO BOTTOM OF FIXTURE UNLESS OTHERWISE NOTED.	14	7
D	PORTFOLIO	LD6B-15-D010-EU6B-1020-80-30-6LB-W-1-MB			LED FURNISHED WITH FIXTURE	7" W x 6" H DOWN LIGHT MOUNTED WITHIN THE CANOPY 10'-0" AFF UNLESS NOTED OTHERWISE	11	5
X	LITHONIA	AFF-OEL-DDBTXD-UVOLT-LTP-SDRT-WT-CW			LED FURNISHED WITH FIXTURE	7" W x 10" H x 4" D EXTERIOR EMERGENCY LIGHT, SURFACE MOUNT WITH BOTTOM OF FIXTURE AT 8'-0" AFF, LITHIUM ION PHOSPHATE BATTERY, OUTPUTS FOR 90 MINUTES AFTER LOSS OF POWER, LISTED FOR COLD WEATHER AND WET LOCATION	12	4

** LAMPS LED; I - INCANDESCENT; F - FLUORESCENT; CF - COMPACT FLUORESCENT; MH - METAL HALIDE

NOTE:

A. PRIOR TO THE INSTALLATION OF ALL EXIT SIGNS AND EMERGENCY LIGHTS, THE ELECTRICAL CONTRACTOR SHALL VERIFY WITH THE GC AND FIRE DEPARTMENT INSPECTOR THE FINAL APPROVED LOCATIONS.

B. LIGHT FIXTURE QUANTITIES ARE APPROXIMATE CONTRACTOR IS RESPONSIBLE FOR VERIFYING FIXTURE COUNT

ELECTRICAL SYMBOLS (NOT ALL SYMBOLS ARE USED)

LIGHTNING

- CKT. / A / LP-1a — FIXT. TYPE SWITCH
- WALL SCONCE
- CANOPY LIGHT
- WALL PACK
- POLE LIGHT
- EXTERIOR 90 MIN BATTERY BACK-UP EMERGENCY HEADS

CONDUIT

- CONDUIT CONCEALED IN WALLS OR CEILING
- CONDUIT UNDER GROUND
- LP-1,3 — PANEL AND CKTS — HOME RUN
- #1/0 CU. — GROUND

MISCELLANEOUS

- JUNCTION BOX MOUNT ON WALL AT 18" AFF UNO
- TELEPHONE WALL BOX 18" AFF UNO STUB 3/4" CONDUIT UP INTO ACCESSIBLE CEILING AREA WITH INSULATED BUSHING, PROVIDE PULL WIRE
- PHONE/DATA WALL BOX 18" AFF UNO STUB 3/4" CONDUIT UP INTO ACCESSIBLE CEILING AREA WITH INSULATED BUSHING, PROVIDE PULL WIRE
- DATA WALL BOX 18" AFF UNO STUB 3/4" CONDUIT UP INTO ACCESSIBLE CEILING AREA WITH INSULATED BUSHING, PROVIDE PULL WIRE
- CEILING MOUNTED PHONE BOX
- MOTOR

GENERAL

- RTU 1 — EQUIPMENT CALL OUT
- # — ELECTRICAL KEYED NOTE DESIGNATION
- 1 — REVISION SYMBOL

POWER AND CONTROLS

- PANELBOARD
- DISCONNECT SWITCH

RECEPTACLES

- DUPLEX RECEPTACLE 16" AFF TO BOTTOM, UNO.
- GFCI DUPLEX RECEPTACLE 16" AFF TO BOTTOM, UNO
- SPECIAL RECEPTACLE

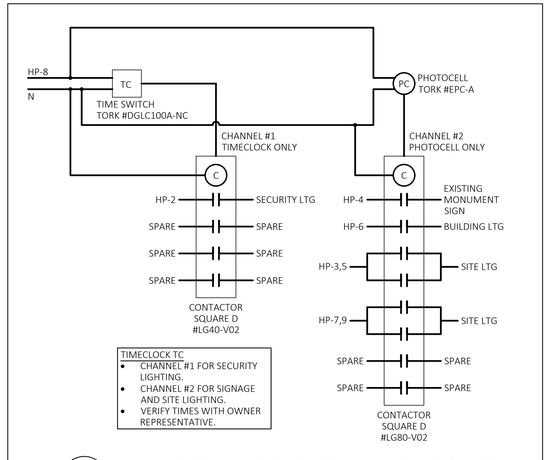

TIMECLOCK TC
- CHANNEL #1 FOR SECURITY LIGHTING.
- CHANNEL #2 FOR SIGNAGE AND SITE LIGHTING.
- VERIFY TIMES WITH OWNER REPRESENTATIVE.

4 / E301 TIME CLOCK AND PHOTOCELL WIRING DIAGRAM

SCALE: NOT TO SCALE

EQUIPMENT SCHEDULE

FILE: 320488 LOAD.xlsm

PLAN MARK	EQUIPMENT SERVED	LOAD	VOLT/ PHASE	FED BY	DISC BY	MCA	MOCPD	FEEDER	REMARKS
RTU 1	ROOF TOP UNIT	15.20KVA	208/3	SBA	EC	42.2A	50A	(3)#6,#8G 3/4"C	
RTU 2	ROOF TOP UNIT	15.20KVA	208/3	SBA	EC	42.2A	50A	(3)#6,#8G 3/4"C	
FF 1	FLY FAN	0.77KVA	120/1	SBA	EC	6.4A	20A	1/2"C W/ PULL STRINGS	MARS #STD248-1U-OB
DAC 1	DRIVE-THRU AIR CURTAIN	7.07KVA	208/1	SBA	EC	34.0A	40A	(2)#8,#10G 3/4"C	AA300-275 PASS-THRU AIR CURTAIN
DW 1	DRIVE-THRU WINDOW	0.96KVA	120/1	SBA	EC	8.0A	15A	(2)#12,#12G 1/2"C	275 SERIES WINDOW

ABBREVIATIONS

(NOTE: NOT ALL ABBREVIATIONS ARE USED)

AFF	ABOVE FINISHED FLOOR	DIM	DIMMER	IG	ISOLATED GROUND
AL	ALUMINUM	DISC SW	DISCONNECT SWITCH	JB	JUNCTION BOX
AMP	AMPERE	DP	DOUBLE POLE	MCB	MAIN CIRCUIT BREAKER
ATS	AUTO-TRANSFER-SWITCH	DT	DOUBLE THROW	MDP	MAIN DISTRIBUTION PANEL
BFG	BELOW FINSHED GRADE	DPP	DISTRIBUTION POWER PANEL	MLO	MAIN LUG ONLY
BLDG	BUILDING	EC	EMPTY CONDUIT	MTD HT	MOUNTING HEIGHT
CB	CIRCUIT BREAKER	EF	EXHAUST FAN	NF	NON FUSED
CKT	CIRCUIT	EM	EMERGENCY	NIC	NOT IN CONTRACT
CLG	CEILING	EWC	ELECTRIC WATER COOLER	RTU	ROOF TOP UNIT
COND OR "C"	CONDUIT	EXIST'G	EXISTING	SW	SWITCH
CONN	CONNECT	FL	FLOOR	UG	UNDER GROUND
CONT	CONTRACTOR	FLUOR	FLUORESCENT	UNO	UNLESS NOTED OTHERWISE
CU	COPPER	GFCI	GROUND FAULT CURRENT INTERUPTER	WP	WEATHER-PROOF
C/T	CURRENT TRANSFORMER	GND OR (G)	GROUND	XFMR	TRANSFORMER

RELEASE FOR CONSTRUCTION
AS NOTED ON PLANS REVIEW
DEVELOPMENT SERVICES
LEE'S SUMMIT, MISSOURI
06/17/2020

CASCO
12 Sunnen Drive, Suite 100, St. Louis, MO 63143 T: 314.645.2621
MIDLAND

Starbucks & Medical Office

155 S.W. MO-150 HWY
LEE'S SUMMIT, MO 64802

CONSTR. DOC. & REVISIONS

No.	Description	Date
	Owner Review	05/12/20
	Owner Revision 2	06/04/20

CASCO DIVERSIFIED CORPERATION PROFESSIONAL ENGINEERING CERTIFICATE OF AUTHORITY #000613 EXP. 12/31/21

6/17/20

HARRY J. AUMAN
LIC. #E16827
EXP. 12/31/20

Drawn By/Checked By: EAV/DAW
Project Number 320488

Permit Date 06-17-20

ELECTRICAL ONE-LINE AND DETAILS

E301

UT. XFRM FAULT CALC		320488 LOAD.xlsm
SERVICE ENTRANCE		CALCULATION
VOLTAGE (L-L):	208V	I-FLA=[RATED KVA * 1000]/ [V-LL*SQRT(PHASE)]
PHASE (PH):	3	
AMPS:	1000A	
FULL LOAD KVA:	360KVA	I-FLA= 1,388A
TRANSFORMER:	500KVA	M=100/%Z= 80.6
IMPEDANCE (%Z):	1.2%Z	I-SC=I-FLA*M= 10 KA

CALCULATION IS BASED ON ESTIMATED TRANSFORMER SIZE WITH %Z FROM BUSSMANN SPD. CONTRACTOR SHALL CONTACT UTILITY AND VERIFY I-SC AVAILABLE AT SECONDARY OF TRANSFORMER. CONTACT ENGINEER FOR RE-CALCULATION IF LARGER THAN CALCULATED.

MOTOR LOAD FAULT CALC		320488 LOAD.xlsm
STARTING I-SC:	10 KA	CALCULATION
MOTOR LOAD (KVA):	30KVA	I-SC(ML)=I-ML*6= 506A
MOTOR LOAD (A):	84A	I-SC=I-SC+I-SC(ML)= 11 KA

LL METER CENTER FEEDER FAULT CALC		320488 LOAD.xlsm
STARTING I-SC:	11 KA	IMPEDANCE BASED ON 3 SINGLE
VOLTAGE (L-L):	208V	CONDUCTORS IN NON-MAGNETIC
PHASE (PH):	3	CONDUIT (WORSE CASE)
FEEDER SIZE:	400	CALCULATION
FEEDER MATERIAL:	CU	f=[SQRT(PHASE)*L*IS-C]/ [Q*C*V-LL]
PARALLEL SETS (Q):	3 SETS	
FEEDER LENGTH (L):	65FT	f= 0.078
FEET PER OHMS (C):	24,297 FT/OHMS	M=1/(1+f)= 0.928
		I-SC=I-SC*M= 10 KA

NOTE: CALCULATION BASED ON BUSSMANN SPD

SBA & SBB FEEDER FAULT CALC		320488 LOAD.xlsm
STARTING I-SC:	10 KA	IMPEDANCE BASED ON 3 SINGLE
VOLTAGE (L-L):	208V	CONDUCTORS IN NON-MAGNETIC
PHASE (PH):	3	CONDUIT (WORSE CASE)
FEEDER SIZE:	3/0	CALCULATION
FEEDER MATERIAL:	CU	f=[SQRT(PHASE)*L*IS-C]/ [Q*C*V-LL]
PARALLEL SETS (Q):	2 SETS	
FEEDER LENGTH (L):	60FT	f= 0.175
FEET PER OHMS (C):	13,923 FT/OHMS	M=1/(1+f)= 0.851
		I-SC=I-SC*M= 8 KA

NOTE: CALCULATION BASED ON BUSSMANN SPD

FM FEEDER FAULT CALC		320488 LOAD.xlsm
STARTING I-SC:	10 KA	IMPEDANCE BASED ON 3 SINGLE
VOLTAGE (L-L):	208V	CONDUCTORS IN NON-MAGNETIC
PHASE (PH):	3	CONDUIT (WORSE CASE)
FEEDER SIZE:	3/0	CALCULATION
FEEDER MATERIAL:	CU	f=[SQRT(PHASE)*L*IS-C]/ [Q*C*V-LL]
PARALLEL SETS (Q):	2 SETS	
FEEDER LENGTH (L):	30FT	f= 0.087
FEET PER OHMS (C):	13,923 FT/OHMS	M=1/(1+f)= 0.920
		I-SC=I-SC*M= 9 KA

NOTE: CALCULATION BASED ON BUSSMANN SPD

HP FEEDER FAULT CALC		320488 LOAD.xlsm
STARTING I-SC:	10 KA	IMPEDANCE BASED ON 3 SINGLE
VOLTAGE (L-L):	208V	CONDUCTORS IN NON-MAGNETIC
PHASE (PH):	3	CONDUIT (WORSE CASE)
FEEDER SIZE:	3	CALCULATION
FEEDER MATERIAL:	CU	f=[SQRT(PHASE)*L*IS-C]/ [Q*C*V-LL]
PARALLEL SETS (Q):	1 SETS	
FEEDER LENGTH (L):	30FT	f= 0.506
FEET PER OHMS (C):	4,811 FT/OHMS	M=1/(1+f)= 0.664
		I-SC=I-SC*M= 6 KA

NOTE: CALCULATION BASED ON BUSSMANN SPD

MOUNT: SURFACE | 120/208 | 3-PHASE, 4W | PANEL FM | CAPACITY: 400A | INT CAP: 200KA

LOCATION: FUTURE MEDICAL OFFICE | LUGS: MLO | DEMAND LOAD: A | AV. FAULT: 9KA

CKT	LTG	REC	HVAC	MISC	NP	DESCRIPTION	AMP	POLE	Φ	AMP	POLE	DESCRIPTION	LTG	REC	HVAC	MISC	NP	CKT
1	0.1					EGRESS EMERG. LTG	20	1	A	20	1	SPARE						2
3						SPARE	20	1	B	20	1	SPARE						4
5						SPARE	20	1	C	20	1	SPARE						6
7						SPARE	20	1	A	20	1	SPARE						8
9						SPARE	20	1	B	20	1	SPARE						10
11						SPARE	20	1	C	20	1	SPARE						12
13						SPARE	20	1	A	20	1	SPARE						14
15						SPARE	20	1	B	20	1	SPARE						16
17						SPARE	20	1	C	20	1	SPARE						18
19						SPARE	20	1	A	20	1	SPARE						20
21						SPARE	20	1	B	20	1	SPARE						22
23						SPARE	20	1	C	20	1	SPARE						24
25						SPARE	20	1	A	20	1	SPARE						26
27						SPARE	20	1	B	20	1	SPARE						28
29						SPARE	20	1	C	20	1	SPARE						30
31						SPARE	20	1	A	20	1	SPARE						32
33						SPARE	20	1	B	20	1	SPARE						34
35						SPARE	20	1	C	20	1	SPARE						36
37						SPARE	20	1	A	20	1	SPARE						38
39						SPARE	20	1	B	20	1	SPARE						40
41						SPARE	20	1	C	20	1	SPARE						42
43						SPARE	20	1	A	20	1	SPARE						44
45						SPARE	20	1	B	20	1	SPARE						46
47						SPARE	20	1	C	20	1	SPARE						48
49						SPARE	20	1	A	20	1	SPARE						50
51						SPARE	20	1	B	20	1	SPARE						52
53						SPARE	20	1	C	20	1	SPARE						54
55						SPARE	20	1	A	20	1	SPARE						56
57						SPARE	20	1	B	20	1	SPARE						58
59						SPARE	20	1	C	20	1	SPARE						60
61						SPARE	20	1	A	20	1	SPARE						62
63						SPARE	20	1	B	20	1	SPARE						64
65						SPARE	20	1	C	20	1	SPARE						66
67						SPARE	20	1	A	20	1	SPARE						68
69						SPARE	20	1	B	20	1	SPARE						70
71						SPARE	20	1	C	20	1	SPARE						72
73						SPARE	20	1	A	20	1	SPARE						74
75						SPARE	20	1	B	20	1	SPARE						76
77						SPARE	20	1	C	20	1	SPARE						78
79						SPARE	20	1	A	20	1	SPARE						80
81						SPARE	20	1	B	20	1	SPARE						82
83						SPARE	20	1	C	20	1	SPARE						84

PHASE BALANCE			LOAD TYPE	CONNECTED	DEMAND	DEMAND FORMULA	TOTAL LOAD	
			LIGHTING	0.1 KVA	0.1 KVA	LOAD X 125% NEC 210.19 CONTINUOUS	CONNECTED	DEMAND
Φ	LOAD	%	RECEPTACLE	0.0 KVA	0.0 KVA	10KVA + 50% REMAINDER NEC 220.44	0.1 KVA	0.1KVA
A	0.1 KVA	100%	HVAC	0.0 KVA	0.0 KVA	LOAD X 80% (USED MCA IN CALCULATION)	0.3A	0.3A
B	0.0 KVA	0%	MISC	0.0 KVA	0.0 KVA	LOAD X 100% NEC 210.19 NON-CONT.	FILENAME:	
C	0.0 KVA	0%	NP	0.0 KVA	0.0 KVA	0 NONCOINCIDENTAL LOADS NEC 220.60	320488 LOAD.xlsm	

NOTES:
A. AIC RATING: STANDARD 10,000 AIC CIRCUIT BREAKERS. SERIES RATED AT 200,000 AMPS WITH BUSSMANN JJN-400 FUSES.

MOUNT: SURFACE | 120/208 | 3-PHASE, 4W | PANEL HP | CAPACITY: 100A | INT CAP: 200KA

LOCATION: LANDLORD UTILITY ROOM | LUGS: MLO | DEMAND LOAD: 11A | AV. FAULT: 6KA

CKT	LTG	REC	HVAC	MISC	NP	DESCRIPTION	AMP	POLE	Φ	AMP	POLE	DESCRIPTION	LTG	REC	HVAC	MISC	NP	CKT	
1	0.1					EGRESS EMERG. LTG	20	1	A	20	1	SECURITY LTG	0.3					2	TC
3	0.1					SITE LIGHTING	20	2	B	20	1	EAST MONUMENT SIGN	1.2					4	TC
5	0.1								C	20	1	BUILDING LTG	0.3					6	TC
7	0.2					SITE LIGHTING	20	2	A	20	1	TIMECLOCK				0.2		8	
9	0.2								B	20	1	HOUSE RECEPTACLES	0.4					10	
11						SPARE	20	1	C	20	1	SPARE						12	
13						SPARE	20	CO	A	20	1	SPARE						14	
15						SPARE	20	1	B	20	1	SPARE						16	
17						SPARE	20	1	C	20	1	SPARE						18	
19						SPARE	20	1	A	20	1	SPARE						20	
21						SPARE	20	1	B	20	1	SPARE						22	
23						SPARE	20	1	C	20	1	SPARE						24	
25						SPARE	20	1	A	20	1	SPARE						26	
27						SPARE	20	1	B	20	1	SPARE						28	
29						SPARE	20	1	C	20	1	SPARE						30	
31						SPARE	20	1	A	20	1	SPARE						32	
33						SPARE	20	1	B	20	1	SPARE						34	
35						SPARE	20	1	C	20	1	SPARE						36	
37						SPARE	20	1	A	20	1	SPARE						38	
39						SPARE	20	1	B	20	1	SPARE						40	
41						SPARE	20	1	C	20	1	SPARE						42	

PHASE BALANCE			LOAD TYPE	CONNECTED	DEMAND	DEMAND FORMULA	TOTAL LOAD	
			LIGHTING	2.9 KVA	3.7 KVA	LOAD X 125% NEC 210.19 CONTINUOUS	CONNECTED	DEMAND
Φ	LOAD	%	RECEPTACLE	0.0 KVA	0.0 KVA	10KVA + 50% REMAINDER NEC 220.44	3.1 KVA	3.9KVA
A	1.0 KVA	25%	HVAC	0.0 KVA	0.0 KVA	LOAD X 80% (USED MCA IN CALCULATION)	8.7A	10.7A
B	2.4 KVA	61%	MISC	0.2 KVA	0.2 KVA	LOAD X 100% NEC 210.19 NON-CONT.	FILENAME:	
C	0.5 KVA	14%	NP	0.0 KVA	0.0 KVA	0 NONCOINCIDENTAL LOADS NEC 220.60	320488 LOAD.xlsm	

NOTES:
A. AIC RATING: STANDARD 10,000 AIC CIRCUIT BREAKERS. SERIES RATED AT 200,000 AMPS WITH BUSSMANN JJN-100 FUSES.
B. "TC" INDICATES CIRCUIT IS CONTROLLED BY TIMECLOCK/PHOTOCELL. REFER TO DETAIL 4/E301 FOR MORE INFORMATION

MOUNT: SURFACE | 120/208 | 3-PHASE, 4W | PANEL SBA | CAPACITY: 400A | INT CAP: 200KA

LOCATION: STARBUCKS | LUGS: MLO | DEMAND LOAD: 96A | AV. FAULT: 8KA

CKT	LTG	REC	HVAC	MISC	NP	DESCRIPTION	AMP	POLE	Φ	AMP	POLE	DESCRIPTION	LTG	REC	HVAC	MISC	NP	CKT	
1			5.1			RTU 1	50	3	A	50	3	RTU 2			5.1			2	
3			5.1						B						5.1			4	
5			5.1						C						5.1			6	
7						SPARE	20	1	A	40	2	DAC 1				3.5		8	
9				0.5		PATIO FAN	20	1	B							3.5		10	
11		1.1				EXTERIOR REC	20	1	C	15	1	DW 1				1.0		12	
13				0.2		TIMECLOCK	20	1	A	20	1	SPARE						14	
15		0.4				RTU RECEPTACLES	20	1	B	20	1	SPARE						16	
17						SPARE	20	1	C	20	1	SPARE						18	
19						SPARE	20	1	A	20	1	SPARE						20	
21						SPARE	20	1	B	20	1	SPARE						22	GFI
23						SPARE	20	1	C	20	1	SPARE						24	GFI
25						SPARE	20	1	A	20	1	SPARE						26	GFI
27						SPARE	20	1	B	20	1	SPARE						28	GFI
29						SPARE	20	1	C	20	1	SPARE						30	GFI
31						SPARE	20	1	A	20	1	SPARE						32	GFI
33						SPARE	20	1	B	20	1	SPARE						34	GFI
35						SPARE	20	1	C	20	1	SPARE						36	GFI
37						SPARE	20	1	A	20	1	SPARE						38	GFI
39						SPARE	20	1	B	20	1	SPARE						40	GFI
41						SPARE	20	1	C	20	1	SPARE						42	GFI
43						SPARE	20	1	A	20	1	SPARE						44	GFI
45						SPARE	20	1	B	20	1	SPARE						46	GFI
47						SPARE	20	1	C	20	1	SPARE						48	GFI
49						SPARE	20	1	A	20	1	SPARE						50	GFI
51						SPARE	20	1	B	20	1	SPARE						52	GFI
53						SPARE	20	1	C	20	1	SPARE						54	GFI
55						SPARE	20	1	A	20	1	SPARE						56	GFI
57						SPARE	20	1	B	20	1	SPARE						58	GFI
59						SPARE	20	1	C	20	1	SPARE						60	GFI
									A				0.1	0.0	0.0	0.0	0.0	62	
									B			FEED THROUGH LUGS TO PANEL B	0.0	0.0	0.0	0.0	0.0	64	
									C				0.0	0.0	0.0	0.0	0.0	66	

PHASE BALANCE			LOAD TYPE	CONNECTED	DEMAND	DEMAND FORMULA	TOTAL LOAD	
			LIGHTING	0.1 KVA	0.1 KVA	LOAD X 125% NEC 210.19 CONTINUOUS	CONNECTED	DEMAND
Φ	LOAD	%	RECEPTACLE	1.5 KVA	1.5 KVA	10KVA + 50% REMAINDER NEC 220.44	40.7 KVA	34.7KVA
A	12.0 KVA	35%	HVAC	30.4 KVA	24.3 KVA	LOAD X 80% (USED MCA IN CALCULATION)	113.0A	96.2A
B	12.5 KVA	36%	MISC	8.7 KVA	8.7 KVA	LOAD X 100% NEC 210.19 NON-CONT.	FILENAME:	
C	10.1 KVA	29%	NP	0.0 KVA	0.0 KVA	0 NONCOINCIDENTAL LOADS NEC 220.60	320488 LOAD.xlsm	

NOTES:
A. AIC RATING: STANDARD 10,000 AIC CIRCUIT BREAKERS. SERIES RATED AT 200,000 AMPS WITH BUSSMANN JJN-400 FUSES.
B. PROVIDE SQUARE D NEMA PB1, TYPE 1 WITH LOCKABLE, HINGED DOOR. IN DOOR CONSTRUCTION.
C. PROVIDE BRANCH CIRCUIT BREAKERS PER TENANTS DRAWINGS.
D. "GFI" INDICATES THIS CIRCUIT IS TO BE PROVIDED WITH A GROUND FAULT CURRENT INTERRUPTING CIRCUIT BREAKER

MOUNT: SURFACE | 120/208 | 3-PHASE, 4W | PANEL SBB | CAPACITY: 400A | INT CAP: 200KA

LOCATION: STARBUCKS | LUGS: MLO | DEMAND LOAD: A | AV. FAULT: 8KA

CKT	LTG	REC	HVAC	MISC	NP	DESCRIPTION	AMP	POLE	Φ	AMP	POLE	DESCRIPTION	LTG	REC	HVAC	MISC	NP	CKT	
1	0.1					EGRESS EMERG. LTG	20	1	A	20	1	SPARE						2	
3						SPARE	20	1	B	20	1	SPARE						4	
5						SPARE	20	1	C	20	1	SPARE						6	
7						SPARE	20	1	A	20	1	SPARE						8	
9						SPARE	20	1	B	20	1	SPARE						10	
11						SPARE	20	1	C	20	1	SPARE						12	
13						SPARE	20	1	A	20	1	SPARE						14	
15						SPARE	20	1	B	20	1	SPARE						16	
17						SPARE	20	1	C	20	1	SPARE						18	
19						SPARE	20	1	A	20	1	SPARE						20	
21						SPARE	20	1	B	20	1	SPARE						22	GFI
23						SPARE	20	1	C	20	1	SPARE						24	GFI
25						SPARE	20	1	A	20	1	SPARE						26	GFI
27						SPARE	20	1	B	20	1	SPARE						28	GFI
29						SPARE	20	1	C	20	1	SPARE						30	GFI
31						SPARE	20	1	A	20	1	SPARE						32	GFI
33						SPARE	20	1	B	20	1	SPARE						34	GFI
35						SPARE	20	1	C	20	1	SPARE						36	GFI
37						SPARE	20	1	A	20	1	SPARE						38	GFI
39						SPARE	20	1	B	20	1	SPARE						40	GFI
41						SPARE	20	1	C	20	1	SPARE						42	GFI
43						SPARE	20	1	A	20	1	SPARE						44	GFI
45						SPARE	20	1	B	20	1	SPARE						46	GFI
47						SPARE	20	1	C	20	1	SPARE						48	GFI
49						SPARE	20	1	A	20	1	SPARE						50	GFI
51						SPARE	20	1	B	20	1	SPARE						52	GFI
53						SPARE	20	1	C	20	1	SPARE						54	GFI
55						SPARE	20	1	A	20	1	SPARE						56	GFI
57						SPARE	20	1	B	20	1	SPARE						58	GFI
59						SPARE	20	1	C	20	1	SPARE						60	GFI

PHASE BALANCE			LOAD TYPE	CONNECTED	DEMAND	DEMAND FORMULA	TOTAL LOAD	
			LIGHTING	0.1 KVA	0.1 KVA	LOAD X 125% NEC 210.19 CONTINUOUS	CONNECTED	DEMAND
Φ	LOAD	%	RECEPTACLE	0.0 KVA	0.0 KVA	10KVA + 50% REMAINDER NEC 220.44	0.1 KVA	0.1KVA
A	0.0 KVA	100%	HVAC	0.0 KVA	0.0 KVA	LOAD X 80% (USED MCA IN CALCULATION)	0.3A	0.3A
B	0.0 KVA	0%	MISC	0.0 KVA	0.0 KVA	LOAD X 100% NEC 210.19 NON-CONT.	FILENAME:	
C	0.0 KVA	0%	NP	0.0 KVA	0.0 KVA	0 NONCOINCIDENTAL LOADS NEC 220.60	320488 LOAD.xlsm	

NOTES:
A. AIC RATING: STANDARD 10,000 AIC CIRCUIT BREAKERS. SERIES RATED AT 200,000 AMPS WITH BUSSMANN JJN-400 FUSES.
B. PROVIDE SQUARE D NEMA PB1, TYPE 1 WITH LOCKABLE, HINGED DOOR. IN DOOR CONSTRUCTION.
C. PROVIDE BRANCH CIRCUIT BREAKERS PER TENANTS DRAWINGS.
D. "GFI" INDICATES THIS CIRCUIT IS TO BE PROVIDED WITH A GROUND FAULT CURRENT INTERRUPTING CIRCUIT BREAKER

VOLTAGE DROP CALCULATIONS

PANEL/LOAD	FEEDER AWG	FEEDER SETS	FEEDER CU/AL	FEEDER PH	OHMS/K-FT NEC TABLES	LENGTH	Z	LOAD	V-DROP	V	%V-DROP
LL METER CENTER	#400	3	CU	3	0.056 OHM/K-FT	65 FT	0.0012 OHM	107 A	0.13 V	208 V	0.06%
SBA	3/0	2	CU	1	0.094 OHM/K-FT	60 FT	0.0056 OHM	96 A	0.54 V	208 V	0.26%
FM	3/0	2	CU	1	0.094 OHM/K-FT	30 FT	0.0028 OHM	1 A	0.00 V	208 V	0.00%
HP	#3	1	CU	1	0.245 OHM/K-FT	30 FT	0.0147 OHM	11 A	0.16 V	208 V	0.08%
SBA-2,4,6	#6	1	CU	3	0.450 OHM/K-FT	60 FT	0.0270 OHM	42 A	1.14 V	208 V	0.55%
HP-3,5	#10	1	CU	1	1.210 OHM/K-FT	300 FT	0.7260 OHM	3 A	2.18 V	208 V	1.05%

NOTES:
SBA-2,4,6 (RTU-2) REPRESENTS THE HEAVIEST LOAD AND HP-3,5 (SITE LIGHTING) REPRESENTS THE LONGEST LOAD. TOGETHER THESE ARE THE WORST CASE BRANCH CIRCUITS.
1-PHASE V-DROP CALC IS BASED ON NEC TABLE 8, DC RESISTANCE, UNCOATED WIRES. IF #1/0 OR LARGER, USE TABLE 9 DUE TO SKIN AFFECT.
3-PHASE V-DROP CALC IS BASED ON NEC TABLE 9, EFFECTIVE Z AT 0.85 PF, UNCOATED WIRES, STEEL CONDUIT (WORST CASE).

EQUATIONS:
Z (1-PH) = (TABLE 8 OHMS/K-FT) * (K-FT/1000') * (LENGTH) (*2) / (SETS) - NOTE: IF #1/0 OR LARGER, USE TABLE 9 DUE TO SKIN AFFECT
Z (3-PH) = (TABLE 9 OHMS/K-FT) * (K-FT/1000') * (LENGTH) / (SETS)
V-DROP = Z * LOAD

320488 LOAD.xlsm

120/208 | 3-PHASE, 4W | LOAD | CAPACITY: 1,000A | DEMAND LOAD: 107A

LTG	REC	HVAC	MISC	NP	DESCRIPTION	AMP	POLE	Φ	AMP	POLE	DESCRIPTION	LTG	REC	HVAC	MISC	NP
0.1	0.0	10.1	3.7	0.0	PANEL SBA	400	3	A								
0.0	0.4	10.1	4.0	0.0				B								
0.0	1.1	10.1	1.0	0.0				C								
0.1	0.0	0.0	0.0	0.0	PANEL FM	400	3	A								
0.0	0.0	0.0	0.0	0.0				B								
0.0	0.0	0.0	0.0	0.0				C								
0.6	0.0	0.0	0.2	0.0	PANEL HP	100	3	A								
1.9	0.0	0.0	0.0	0.0				B								
0.4	0.0	0.0	0.0	0.0				C								

	LOAD TYPE	CONNECTED	DEMAND	DEMAND FORMULA	TOTAL LOAD	
	LIGHTING	3.1 KVA	3.9 KVA	LOAD X 125% NEC 210.19 CONTINUOUS	CONNECTED	DEMAND
	RECEPTACLE	1.5 KVA	1.5 KVA	10KVA + 50% REMAINDER NEC 220.44	43.9 KVA	38.6KVA
	HVAC	30.4 KVA	24.3 KVA	LOAD X 80% (USED MCA IN CALCULATION)	122.0A	107.3A
	MISC.	8.9 KVA	8.9 KVA	LOAD X 100% NEC 210.19 NON-CONT.	FILENAME:	
	NP	0.0 KVA	0.0 KVA	0 NONCOINCIDENTAL LOADS NEC 220.60	320488 LOAD.xlsm	

NOTES:
REPRESENTATION OF HVAC LOADS WITHIN THIS PERMIT, PLUS BUILDING LOADS RECEIVED FROM STARBUCKS.
BUILDING LOADS FROM STARBUCKS WILL BE PROVIDED UNDER SEPARATE PERMIT PACKAGE.

RELEASE FOR CONSTRUCTION
AS NOTED ON PLANS REVIEW
DEVELOPMENT SERVICES
LEE'S SUMMIT, MISSOURI
06/17/2020

CASCO
12 Sunnen Drive, Suite 100, St. Louis, MO 63143 T: 314.781.2777

MIDLAND

Starbucks & Medical Office
155 S.W. MO-150 HWY
LEE'S SUMMIT, MO 64802

No.	Description	Date
	Owner Review	05/12/20
	Owner Review 2	06/04/20

CONSTR. DOC. & REVISIONS

CASCO DIVERSIFIED CORPORATION PROFESSIONAL ENGINEERING CERTIFICATE OF AUTHORITY #000613 EXP. 12/31/21

6/17/20

HARRY J. AUMAN
LIC. #E16827
EXP. 12/31/20

Drawn By/Checked By: EAV/DAW
Project Number 320488

Permit Date 06-17-20

ELECTRICAL PANEL SCHEDULES

E302

SECTION 16010 – GENERAL PROVISIONS

RELATED DOCUMENTS
A. The General Conditions, Supplementary Conditions, and General Requirements apply to the Work specified in this Section.

DESCRIPTION:
A. This Section defines the General Provisions which are common to all Sections of Division 16.

B. The information in the Specifications and the Plan Drawings are basic facts to follow in determining a reasonable and competitive price for the disciplines intended. The Drawings and Specifications do not necessarily indicate or describe each item necessary for the full performance and completion of the particular work the contractor may be bidding. These documents provide the general intent necessary to inform the contractor of the tenant's desire for the systems required for Electrical. Contractor shall visit the site prior to bidding to become familiar with the existing conditions under which the work shall be performed. Failure to inspect the site will not be considered justification for an adjustment in contract price or failure to perform the work under this contract.

C. Work Included:
- All electrical work herein specified and/or shown on drawings unless noted otherwise.
- Work by the Utility Company for which there is a backcharge. All electrical back charges to be included under this Division 16 Contract.
- Installation shall be complete from the location designated by the Electrical Utility Company as the point of service connection, to the final connection of motors, fixtures, devices, apparatus or pieces of equipment, unless modified by Drawings or these Specifications.
- The Electrical Drawings and specifications shall be understood to cover complete operating systems.
- The Drawings and Specifications are to be taken together. Work specified and not shown, or work shown and not specified shall be performed or furnished as though mentioned in both Drawings and Specifications.
- Minor items and accessories reasonably inferred as necessary to complete such systems shall be included. All work & materials necessary for proper operation of any system, shall be provided by this Contractor.

D. Description of System:
- Complete power wiring to main disconnect switch, panels, motorized equipment, motors, equipment cabinets, and miscellaneous outlets.
- General wiring for power, lighting, and miscellaneous systems.
- Materials and equipment for electrical work.
- Electric service and distribution.
- Motor and equipment wiring, including starters, safety switches & control wiring.
- General and emergency lighting and power systems.

Arrange for sources of temporary construction services. Such services shall be nominally 120/208 volt, 3 phase, 4 wire from which a complete system of temporary power and lighting shall be installed for all construction needs and as required by the occupational safety and health departments, (OSHA). Temporary services shall be removed upon completion of work.
- Wiring of power connections to equipment furnished and installed by others.
- Cutting, patching, excavation and back fill, and concrete work required to complete the work of this section. Back fill shall be compacted to 95% of standard compaction. All existing surfaces shall be patched or replaced to "Like New" conditions.
- All other equipment, material, devices, accessories required and/or shown on the drawings.

E. Definitions – As used within the Contract Document:
- "Circuitry" or "Wiring" shall mean any electric work.
- "Package Unit" shall mean an item of equipment having one or more motors or other electric energy consuming elements integrally factory mounted on a single base, complete with all associated control devices and interconnecting wiring.

F. Permits:
- Obtain all permits and pay all fees required for the complete electrical system.

QUALITY ASSURANCE
A. Qualifications:
- Materials and equipment shall be new and shall conform to N.E.M.A. and Underwriters Laboratories (UL) standards in every case, where such standard has been established. All equipment of similar type shall be of the same manufacturer.

B. Requirements of Regulatory Agencies:
- All electrical work shall be in accordance with the National Electrical Code (N.E.C.), current edition, and any amendments to the National Electrical Code made by the local Code Officials. Coordinate exact code requirements and local amendments with AHJ prior to any installation.
- Where applicable, all fixtures, equipment and materials shall be as approved or listed by the following agencies:

a. Factory Mutual Laboratories.
b. National Fire Protection Association.
c. Underwriters Laboratories, Inc. (UL)
d. National Electrical Manufacturers Association (NEMA)
e. Americans with Disabilities Act (ADA)

C. Allowable Tolerances:
- Review Architectural, Structural and Mechanical Drawings for all dimensions, locations, partitions and walls, structural details, and location of mechanical pipes and ducts so that the electrical installation shall be in coordination with that of the other trades.
- Exact location and electrical requirements of equipment furnished by other trades and wired by this Contractor shall be obtained from the Drawings of the other trades.

APPROVAL DRAWINGS
A. Prepare and submit for approval such additional electrical drawings, diagrams, and specifications as are required by:

a. Local Fire Prevention Bureau
b. Local Building Department – Electrical Inspection Section
c. Local Utility Companies

COORDINATION AND COOPERATION
A. The contractor shall examine the premises and satisfy himself of existing conditions under which he will be obligated to operate in performing his part of the work or that will in any manner affect the work under the contract. The Contractor shall cooperate with other trades so that the installation of all equipment may be properly coordinated.
B. All equipment furnished shall fit the space available, with connection, etc., in the required locations and with adequate space for operating and servicing. The drawings are generally diagrammatic and indicate the manner and method of the installation while the specifications and fixture list denote the type and quality of material and workmanship to be used. Where a conflict exists between the drawings and the specifications, the Contractor shall promptly notify the Architect whose decision shall be final. No allowance will be made subsequently in this connection on behalf of the Contractor after award of the contract.

GUARANTEE
A. Provide one year guarantee for all fixtures, equipment, materials and workmanship, upon final acceptance by tenant. Any defective material or faulty workmanship shall be replaced without cost to tenant.

PROTECTION
A. The contractor shall be responsible for protecting all, both, new and existing equipment and systems against harmful exposure, or accumulation of dust/moisture, flooding, corrosion, or other forms of damage. Clean and restore damaged finishes and equipment to place installation in a like–new condition.
B. Contractor shall determine operational condition of existing equipment to be used and maintained for this project prior to commencing work. Contractor shall adjust, repair or replace non functional equipment. All work shall maintain existing UL listing and labeling requirements. Contact and report all unforeseen conditions for appropriate directions.

INSTALLATION/APPLICATION/PERFORMANCE/ERECTION
A. Application, Installation:
- No measurements of a Drawing by scale shall be used as a dimension to work by. The drawings are not intended to show complete or accurate details of the building in every respect. Exact locations and relations are to be defined in the field and shall be satisfactory to the Architect/Engineer. This Contractor shall take all field measurements and shall be responsible therefore.
- Compare Drawings and Specifications, checking all measurements and determine intent of Contract Documents. Discrepancies shall be brought to the Architect/Engineer's attention for interpretation prior to any installation.
- The right is reserved to make any reasonable change in location of outlets and equipment prior to roughing–in without involving additional expenses. Any change from the Electrical Drawings as is necessary to make the work of this Contractor conform to the building as constructed and to fit the work of other trades shall be included in Contractor's Contract and installed without extra cost.
- Perform all work in compliance with all applicable safety regulations including OSHA regulations.
- Coordinate all work with other trades prior to any installation.
- Provide code approved clearances around electrical equipment.
- Coordinate staging of material with building management representative at time of bidding.

FIELD QUALITY CONTROL
A. Testing:
- After wires are in place and connected to devices and equipment, the system shall be tested for shorts and grounds. All hot wires, if shorted or grounded, shall be removed and replaced.
- All meters, instruments, cable connections equipment, and apparatus necessary for making all tests, shall be furnished by this Contractor at his own expense.

ADJUST AND CLEAN
A. Cleaning Equipment, Completed Work and Premises: After the completion of all installations, each system shall be thoroughly cleaned to remove all paint, oil and other foreign material. Contractor shall also clean all foreign paint, grease, oil, dirt, labels and stickers, etc., from all fixtures, equipment, etc. The Contractor shall remove all rubbish, debris, etc., accumulated from his operations from the premises.

APPROVALS
A. Obtain all permits and approvals from the governing bodies which have jurisdiction over this project.

IDENTIFICATION AND TAGGING
A. Identification of distribution switches or circuit breakers individually mounted or of panel boards shall be by means of engraved lamacoid nameplates permanently fastened on the front face of the housing, showing 1/4" high white lettering on a black background. Provide all panel boards with typewritten directory.

SLEEVES
A. Provide sleeves in walls and floor slabs for the passage of all conduits, pipes and ducts installed. Sleeves shall be set in place in sufficient time, ahead of concrete work, so as not to delay that work.

CUTTING AND PATCHING
A. Perform all cutting and patching required to complete the Work, except where specifically shown on the Architectural or Structural Drawings. Patching shall match existing and shall be coordinated with tenant's representative.

SECTION 16010 – BASIC MATERIALS AND METHODS

MATERIALS
A. CONDUIT:
Electrical Metallic Tubing: EMT, "Thinwall" conduit shall in general be utilized where permitted by Code except where described herein.
Minimum size conduit shall be 1/2", unless specifically noted otherwise.
Heavy–wall steel conduit and I.M.C. shall be either hot dipped galvanized or sherardized.
Flexible conduit shall be Greenfield type except, where exposed to oil, grease, or water–conduit shall be Sealtite.
Plastic conduit shall be PVC Schedule 40.
Conduit shall be as manufactured by Allied, Triangle or approved equal.
Provide expansion fittings for conduits crossing expansion joints.
Conduit Fittings:

a. Rigid: Threaded.
b. Thin–Wall: Compression Type.
c. Flexible: Connectors shall be compatible with flexible conduit used. Provide bushing and lock nuts for all conduit entries to boxes.

B. Wires and Cables:
Unless specifically noted otherwise, all wiring shall be installed in conduit.
All wire shall be type THW or THWN copper unless otherwise noted on plans.
Wire smaller than #8 shall be solid: #8 and larger, stranded.
Cable and wire shall be as manufactured by Triangle, General Cable, Southwire or Carol.

C. Color Coding: Color coding shall be used throughout the entire electrical system. Provide industry standard color coding for the voltages involved. Control wiring shall be numbered for easy identification of terminal points. Number terminal blocks accordingly

D. Disconnect Switches:
Switches shall meet NEMA enclosed switch standards KS1, current edition. Switches shall be quick–make, quick–break so that operation of the contacts shall not be capable, during normal operation of the switch, of being restrained by the operating handle after the opening or closing of the contacts has started.
All safety switches shall be heavy duty of voltage matching equipment served. NEMA 1 for indoor use and NEMA 3R for outdoor use. Switches shall be as manufactured by Eaton, General Electric, Square D, or Siemens.

E. Fuses: Furnish and install all fuses. Fuses shall be Bussmann or as specified on the Drawings.
Provide fuses at all locations shown on the drawings or required for supplemental protection. Where amp rating of protective device is 600 amps or less, provide Bussmann low–peak current limiting fuses, class J for service switches. class RK1 on panels; RK5 (with dual element Fusetron up to 100 A; above 100 A dual element Low Peak), having an interrupting rating of 200,000 amps RMS, unless noted 601 amps, provide Bussmann "Limitron" fuses, Class "L", having an interrupting rate of 200,000 amps RMS unless noted otherwise. Provide similar type, "Hi–Cap" fuses where shown.

F. Outlet, Pull and Junction Boxes: Outlet, pull and junction boxes shall be 12 gauge, or heavier, steel, with removable knockouts. Boxes shall be as manufactured by Appleton, Steel City or Raco. Size boxes as required for the intended duty, minimum size as required by the applicable National Electrical Code.

G. Switches:
Wall switches shall be located as indicated on the Drawings, arranged singly or in gangs and at the height specified or indicated and shall have proper covers with finishes specified herein.
Switches shall be as follows unless otherwise called for on Drawings or hereinafter specified.
Switches, 20 amperes, 120/277 volt specification grade, quiet rated:
by Leviton, Eagle, HUBBELL, or Pass & Seymour. Switch shall be white.

H. Receptacles:
Receptacle shall be located as shown on the Drawings and at the heights specified or indicated. Receptacle and power outlets shall be of the grounding type specification grade and as manufactured by HUBBELL, General Electric, Pass & Seymour, Eagle or Leviton.
Receptacle shall be White.

I. Switch and Receptacle Plates:
Plates in finished areas for switches and receptacles shall be white.
Identify all dedicated circuits with a laser printed adhesive label indicating panel and circuit number.

J. Contractor shall provide all elbows, connectors, etc., and install outlets complete.

K. Lighting and Appliance Panel boards by tenant:
1. Panels shall be type indicated on the Drawings, with main lugs, main breakers, branch breakers, spares and spaces as scheduled. Panels shall comply with U.S. Federal Specification WP115a, Type 1, Class 1.
Bus structure shall be copper.
All circuit breakers shall be bolt–on type.
The Contractor shall balance all circuits. All conductors shall be continuous without splicing from last outlet to their terminals in cabinet.
Contractor shall provide a directory of circuits for cabinet.
Directory shall be typewritten designating room or equipment and circuit numbers, include any existing circuits which remain.
Where 2 or 3 pole breaker units are called for, they shall be on unit with common trip and not single pole units with handle ties.
Capacity of main busses shall be as shown on the Drawings.
Panel boards shall be manufactured to match equipment supplied by tenant's vender.

REPARATION/INSTALLATION/APPLICATION
A. CONDUIT:
- Installation – All conduit shall be sized in accordance with the applicable N.E.C.
- Conduit to be run exposed in unfinished areas such as mechanical and electrical room used as electrical closets. All other conduit shall be concealed.
- All conduit and wiring shall be concealed wherever possible. Where conduit and wire cannot be concealed, obtain direction from the Architect. No surface mounted conduit, wire mold or power poles will be acceptable, unless specifically indicated on the drawings.
- All exposed conduits shall be run parallel to or at right angles to structural members. Carefully coordinate exact routing with the Architect's representative, in the field, prior to any installation.
- All conduit shall be independently supported from the building structure. Conduit shall not be suspended from ventilating ducts, mechanical piping, suspended ceiling grids, or their hangers.
- All conduit shall be mechanically and electrically continuous from outlet to outlet and box to box. Secure conduit fittings at all enclosures and junctions.

B. Types of Conduit:
- Conduit, within building confines run in concrete slabs, within outside masonry walls, in earth fill, and exposed in wet areas shall be galvanized steel heavy wall or IMC. Couplings for conduit run in poured concrete shall be concrete tight.
- Conduit run exposed or outdoors shall be galvanized steel heavy wall or IMC with watertight fittings and boxes.
- Conduit run in dry areas within building confines shall be EMT, except where specifically noted otherwise or prohibited by local codes. Dry areas are inside partitions, ceiling cavities, above grade slabs, and areas not subject to damage.
- Conduit with trade sizes over 1–1/2" and/or exposed in mechanical rooms shall be galvanized steel heavy wall or IMC.
- Conduits run under floor slabs and in contact with earth may be PVC Schedule 40.

C. Provide full size insulated (green) ground wire in all conduits. Where the drawings do not identify the size of the equipment ground wire, it shall be sized per NEC. Provide bare ground wire in all PVC conduit runs.

D. Boxes, outlets and cabinets:
- Install equipment and materials in a neat and workmanlike manner and align, level and adjust for satisfactory operation. Install equipment so that all parts are easily accessible for inspection, operation, maintenance and repair. Provide the design, fabrication, and erection of supplementary structural framing required for attachment of hangers or other devices supporting electrical equipment. Rigidly mount all boxes and provide with suitable screw fastened covers. Plug open knockouts or holes in boxes with suitable blanking devices.
- Center all outlets with regard to paneling, furring, and trim. Symmetrically arrange outlets in the room. Satisfactorily correct outlets improperly located or installed. Repair or replace damaged finishes. Set outlets plumb and extend to the finished surface of the wall, ceiling or floor without projecting beyond same.

E. Fire and Smoke Partition Penetrations:
- The Contractor shall familiarize himself with all fire rated construction and install his work so as to maintain the integrity of the fire code rating. Maintain rating of fire rated and smoke rated construction. Sleeves shall be steel or pre–manufactured sleeves similar to Pipe Shields, Inc., for bare pipe through fire walls and floors, model WFB, DFB or QDFB. For plastic pipe, use type WFB with one inch thick calcium silicate insulation encased in metal sleeve extension two feet either side of fire rated walls or floor. Seal annular space around conduits. For fire and smoke rated floors, walls and partitions, use UL listed material that maintains fire rated wall and floor integrity, similar to RTV foam, Dow Corning "Fire Stop" or Pipe Shields, Inc., model WFB, DFB, or QDFB. For non–rated walls and partitions, use mineral or glass fiber insulation.

SECTION 16400 – SERVICE AND DISTRIBUTION

DESCRIPTION
A. Work Included:
- Current transformers cabinet.
- Main switchboard.
- A complete distribution system.
- System grounding per local codes.
- All work and charges required by the local utility company.
- Dry type step down transformer.

B. Services:
- Incoming electrical service is as indicated on drawings.
- Provide exterior main service entrance rated switch where required by local authority.
- Provide concrete encased service feeders where installed in PVC schedule 40 conduit. Underground service feeders shall be a minimum of 36" below grade. Install warning tape above conduit route 12" below grade. Transition below grade to galvanized steel conduit with thread fillings where underground conduit is to be exposed above grade.

EQUIPMENT
A. Main switchboard shall be service entrance rated and front accessible with removable screw – on cover plates. Grounding and metering shall comply with the local utility company and all local code requirements.

DISTRIBUTION PANEL BOARDS BY TENANT
A. Panel board shall be enclosed in steel cabinet of rigidity and gauge of steel per UL Standard #50 for cabinets. All panel boards shall be provided with door locks, all keyed alike.
B. Bus structure shall be copper.
C. Short circuit current rating shall be equal to or greater than the available short circuit at the panel board, and as called for on plans, but not less than 65,000 amperes symmetrical, where available fault can not be determined. Where allowed by authority having jurisdiction series rating may be applied.
D. Panel boards shall be as shown on the drawings with main lugs, main breakers, branch bolt–on breakers, spares and spaces as scheduled. Provide G.F.I. breakers as required. Panel boards to match equipment supplied by tenant's vender
E. Provide a typewritten panel directory for each panel, identifying the use of each circuit including any existing circuits which remain.

CONNECTIONS
A. All main feeder connections shall be made with soder–less connectors, bolted type. Smaller wire splices shall be made with pressure type connectors – Minnesota Mining "SKOTCHLOCKS" or Ideal "WINGNUTS"

INSTALLATION
A. System Grounding
- Shall be in strict accordance with the National Electrical Code, Local Governing Authorities and in accordance with the recommendations of the Utility Company. See details on drawings for additional grounding requirement.
- All equipment grounding conductors and grounding electrodes shall be copper and comply with local and national code.

B. Electrical Service:
- The Utility Company will furnish, install and connect all primary service conductors.
- This contractor shall contact the Utility Company and Landlord to obtain all information necessary for the work, incorporate their instructions into the work, and obtain their approval of all work and material. Include all costs in base bid.

SECTION 16500 – LIGHTING SYSTEMS AND CONTROLS
DESCRIPTION
A. Work Included:
- Contractor to provide lighting fixtures with lamps, hangers and controls as shown on Drawings. Tenant will provide all interior lighting fixtures, lamps, spacers, fixture trim and accessories as required for a complete secure and working installation with–in their space.

B. Requirements
- All lamps shall be T–8 LED 4K retrofit 4' long type lamps, dual rated for 120v or 277v operation. All lamps shall be as indicated on the drawings.
- All lamp ballasts drivers shall be electronic type integral to lamp fixture housing.
- Provide all exit and emergency lighting as required by applicable code(s).
- All lighting circuit shall have dedicated neutral.

RELEASE FOR CONSTRUCTION
AS NOTED ON PLANS REVIEW
REGULATORY DEVELOPMENT SERVICES
LEE'S SUMMIT, MISSOURI
06/17/2020

CASCO
12 Sunnen Drive, Suite 100, St. Louis, MO 63143 T: 314.645.2551
MIDLAND

Starbucks & Medical Office
155 S.W. MO-150 HWY
LEE'S SUMMIT, MO 64802

CONSTR. DOC. & REVISIONS

No.	Description	Date
	Owner Review	05/12/20
	Owner Review 2	06/04/20

CASCO DIVERSIFIED CORPERATION PROFESSIONAL ENGINEERING CERTIFICATE OF AUTHORITY #000613 EXP. 12/31/21

MISSOURI B-16827 PROFESSIONAL ENGINEER 6/17/20

HARRY J. AUMAN
LIC. #E16827
EXP. 12/31/20

Drawn By/Checked By:	EAV/DAW
Project Number	320488
Permit Date	06-17-20

ELECTRICAL SPEC'S

E401