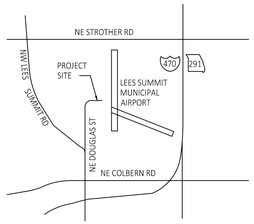

VICINITY MAP

NOT TO SCALE

NORTH

PROJECT DATA

ADDRESS: 2751 NE DOUGLAS ST, UNIT V
LEES SUMMIT, MO 64064

TYPE IIIB CONSTRUCTION
S-1 BUILDING TYPE
OCCUPANCY - S-1

SINGLE STORY W/ MEZZANINE
AREA: 125' X 95' = 11,875 sq.fT.
Type IIIB allowed 17,000 sq.ft.
55' above grade plan
2 story

NON SPRINKLERED
MAX HEIGHT- 31'-1"
OCCUPANCY
AIRCRAFT HANGER - 9,895sqFT/ 500 = 20 OCCUPANTS
BUSINESS AREA- 1,980sq.ft/ 150 = 13 OCCUPANTS
MEZZANINE BUSINESS AREA- 1,980/ 150 = 13 OCCUPANTS

TOTAL 46 OCCUPANTS

ZONING: AIRPORT ZONE

- THE FOLLOWING REQUIRE SPECIAL INSPECTIONS IN ACCORDANCE WITH THE BUILDING CODE
CAST-IN-PLACE CONCRETE
STRUCTURAL STEEL
VERIFICATIONS OF SOILS AND INSPECTION OF FILL PLACEMENT
WOOD CONSTRUCTION
PAVEMENT INSPECTION (OWNER SHALL BE INFORMED OF INSPECTION AND SHALL ALSO BE ON SITE) DURING INSPECTION.
FOR ADDITIONAL INFORMATION SEE STRUCTURAL

- SPECIAL INSPECTIONS WILL BE PERFORMED BY A QUALIFIED AGENCY CONTRACTED BY THE OWNER. CONTRACTOR TO COORDINATE SCHEDULE WITH THE INSPECTOR. A COPY OF ALL SPECIAL INSPECTIONS, FIELD TEST, ETC. SHALL BE SENT TO CITY INSPECTION'S DEPARTMENT. SPECIAL INSPECTIONS TO BE PROVIDED ELECTRONICALLY TO THE CITY BUILDING OFFICIAL IN ACCORDANCE WITH IBC 1704.

NOTES:

- DRAWINGS ARE NOT TO BE SCALED.

- TERMITE CONTROL TO BE PROVIDED

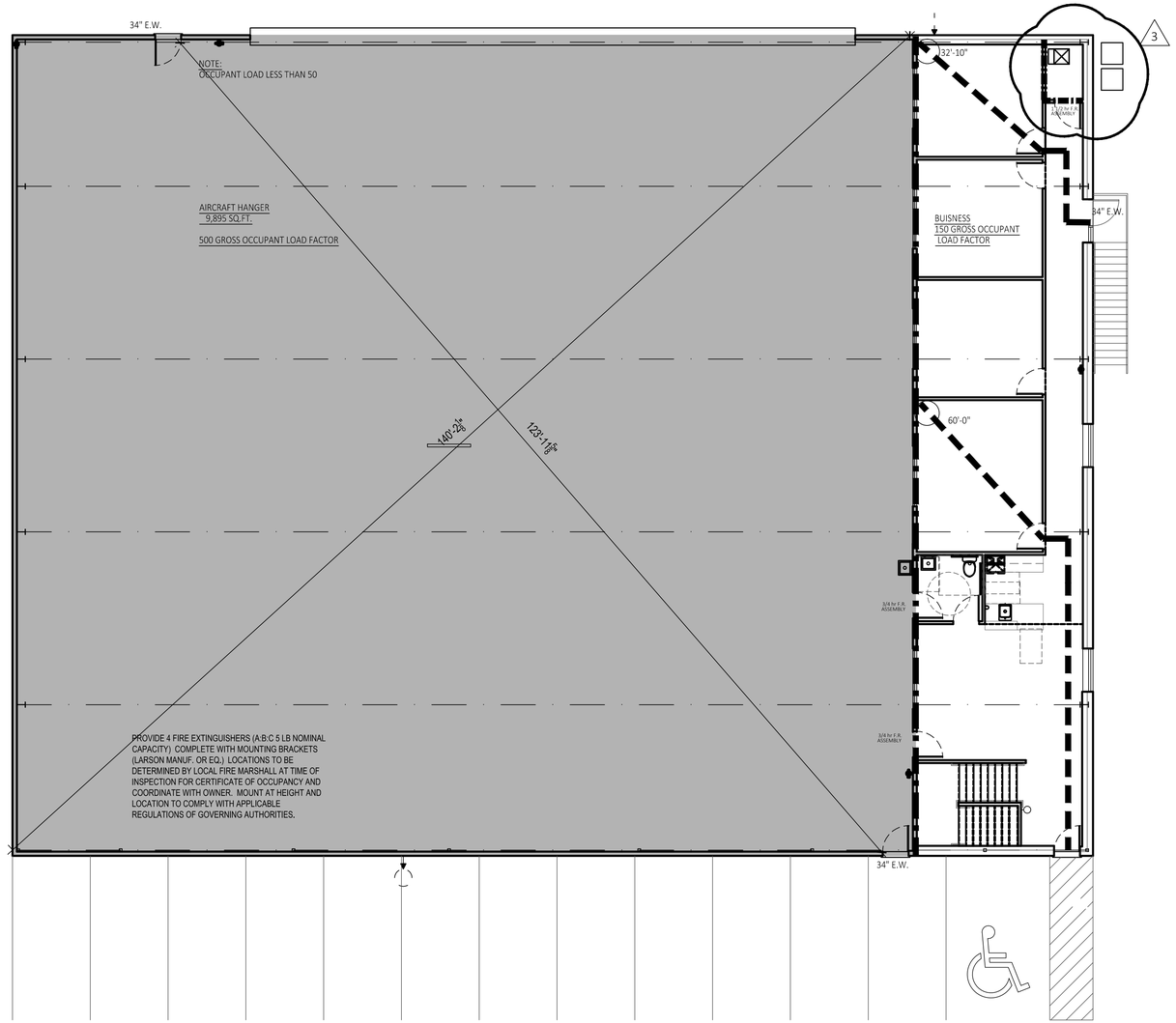

NORTH

LIFE SAFETY PLAN

SCALE 1/8"=1'-0"

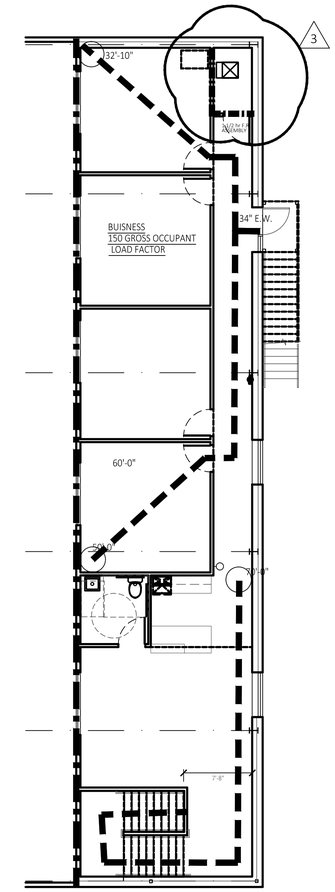

MEZZANINE PLAN

SCALE 1/8"=1'-0"

DRAWING INDEX

A100 COVER SHEET, CODES & LS PLAN
A101 FLOOR PLAN
A102 MEZZANINE PLAN & ELEVATIONS
A103 ELEVATIONS,
A104 SECTIONS
A105 INTERIOR ELEVATIONS, DETAILS
WINDOW & DOOR SCHEDULE

S100 FOUNDATION PLAN
S200 DETAILS
S201 DETAILS

P101 PLUMBING PLAN
P201 SCHEDULES, RISER DIAGRAM & DETAILS

MP000 SPECIFICATIONS
M101 MECHANICAL PLAN
M201 SCHEDULES

E 000 SPECIFICATIONS
E 100 ELECTRICAL PLAN

Lee's Summit City Council adopted building code regulations (Ordinance #8536) and fire code (Ordinance #8537). These ordinances adopt provisions from the following nationally published construction codes:

- 2018 International Building Code
- 2018 International Plumbing Code
- 2018 International Mechanical Code
- 2018 International Fuel Gas Code
- 2018 International Residential Code
- 2018 International Fire Code
- 2017 National Electrical Code
- ICC/ANSI A117.1-2009, Accessible and Usable Buildings and Facilities

NATIONAL FIRE PROTECTION AGENCY (NFPA) 409 STANDARDS ON HAIRCRAFT HANGERS

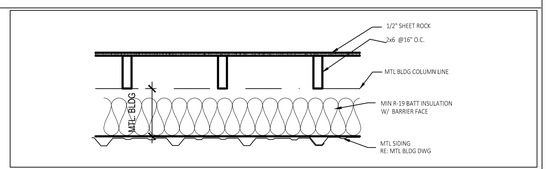

OFFICE EXTERIOR WALL DETAIL

UL U305 — Interior Partitions - Wood Stud (Load-Bearing)

Fire Rating	System Thickness	STC
1 hours	4 3/4 in.	33

ASSEMBLY DETAILS

Gypsum Board: 5/8" Thick Gypsum Board (UL Type ULIX™)

Wood Studs: 2x4 Wood Studs, 16" O.C.

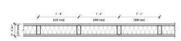

UL U305 — Interior Partitions - Wood Stud (Load-Bearing)

Fire Rating	System Thickness	STC
1 hours	4 3/4 in.	34

ASSEMBLY DETAILS

Gypsum Board: 5/8" Thick Gypsum Board (UL Type SCX)

Wood Studs: 2x4 Wood Studs, 16" O.C.

Insulation: 3-1/2" Glass Fiber Batt Insulation

Gypsum Board: 5/8" Thick Gypsum Board (UL Type SCX)

UL U301 — Exterior Walls - Wood Stud (Load-Bearing)

Fire Rating	System Thickness	STC
2 hours	6 in.	n/a

ASSEMBLY DETAILS

Gypsum Board: 2 Layers of 5/8" Thick Gypsum Board (UL Type SCX)

Wood Studs: 2x4 Wood Studs, 16" O.C.

Insulation: 3-1/2" Glass Fiber Batt Insulation

Gypsum Board: 2 Layers of 5/8" Thick Gypsum Board (UL Type SCX)

3

_AYOUT FOR SIZE,

UPGRADE SIZE TO 2x6 FOR MEZZANINE STRUCTURAL SUPPORT.

LEGEND

FIRE PARTITION WALLS TO UNDERSIDE OF ROOF DECK.

1 HR FIRE PARTITION WALL
NFPA 409
UL 305

2 HR FIRE PARTITION WALL
UL 301

FIRE EXTINGUISHER

WALLS-
INTERIOR PARTIITON WALLS (non-load bearing) - 2x4 @ 16" O.C.
INTERIOR PARTITON WALL (LOAD BEARING) - 2x6 @ 16" O.C.

EXTERIOR OFFICE WALLS- 2x6 @ 16" O.C.
1/2" GYPSUM BD
MIN R-19 FACE BATT INSULATION
MTL PANEL EXTERIOR (METAL BUILDING PACKAGE)

NOTE: ALL WOOD IN CONTACT WITH CONCRETE TO BE PRESSURE TREATED WOOD.

PLUMBING: IPC TABLE 403.1
WATERCLOSETS 1 PER 25 FOR FIRST 50 PROVIDED: 2
LAVATORY 1 PER 40 FIRST 80 PROVIDED: 2
DRINKING FOUNTAIN 1 PER 100 PROVIDED 1
SERVICE SINK 1 PROVIDED 1

STATE OF MISSOURI
BRYSON CRAIG SHAW
NUMBER A-3013
REGISTERED ARCHITECT
6/18/20

Signature BUILDERS KC, LLC

Signature Builders KC, LLC
2751 NE Douglas St. - Suite R
Lee's Summit, Missouri 64064
Phone: (816) 215-0891

Website:
www.sb-kc.net

New Airplane Hangar
at Lees Summit Airport
2751 NE DOUGLAS ST, UNIT V
LEES SUMMIT, MO 64064

SH ASSOCIATES

SHAW HOFSTRA + ASSOCIATES
1800 CENTRAL STREET, SUITE 203
KANSAS CITY, MISSOURI 64108
P: 816.421.0505
ARCHITECTURAL CORPORATION
Certificate of Authority No. 00111130

This document, and all plans, specifications,and other information contained therein, are the exclusive property of SHAW HOFSTRA + ASSOCIATES. These documents are delivered and accepted by you in trust and on the expressed condition that neither these documents or the information contained therein will be copied, reproduced, or delivered to others, except copies stamped "CONFIDENTIAL — NOT FOR CONSTRUCTION/PROPERTY OF SHAW HOFSTRA + ASSOCIATES." No reproducible copies shall be distributed without the express written consent of SHAW HOFSTRA + ASSOCIATES. The design represented by these documents and plans is the exclusive property, design, and concepts of SHAW HOFSTRA + ASSOCIATES and may not be used or copied without the express written consent of SHAW HOFSTRA + ASSOCIATES.

SHAW HOFSTRA + ASSOCIATES © 2020

CAD Construction Documents
Voice / Text : 913.638.3241
mgspencer@sbcglobal.net
Residential AutoCAD Drafting
and Design Services

No.	Description	Date
	2nd City Comments	6/24/2020
3	3rd City Comments	7/8/2020

CONSTRUCTION DOCUMENTS

Project Number	LS V
Date	2020 JUNE 19
Drawn By	CCD
Checked By	SBKC

COVER

SHEET SIZE: 24" x 36"

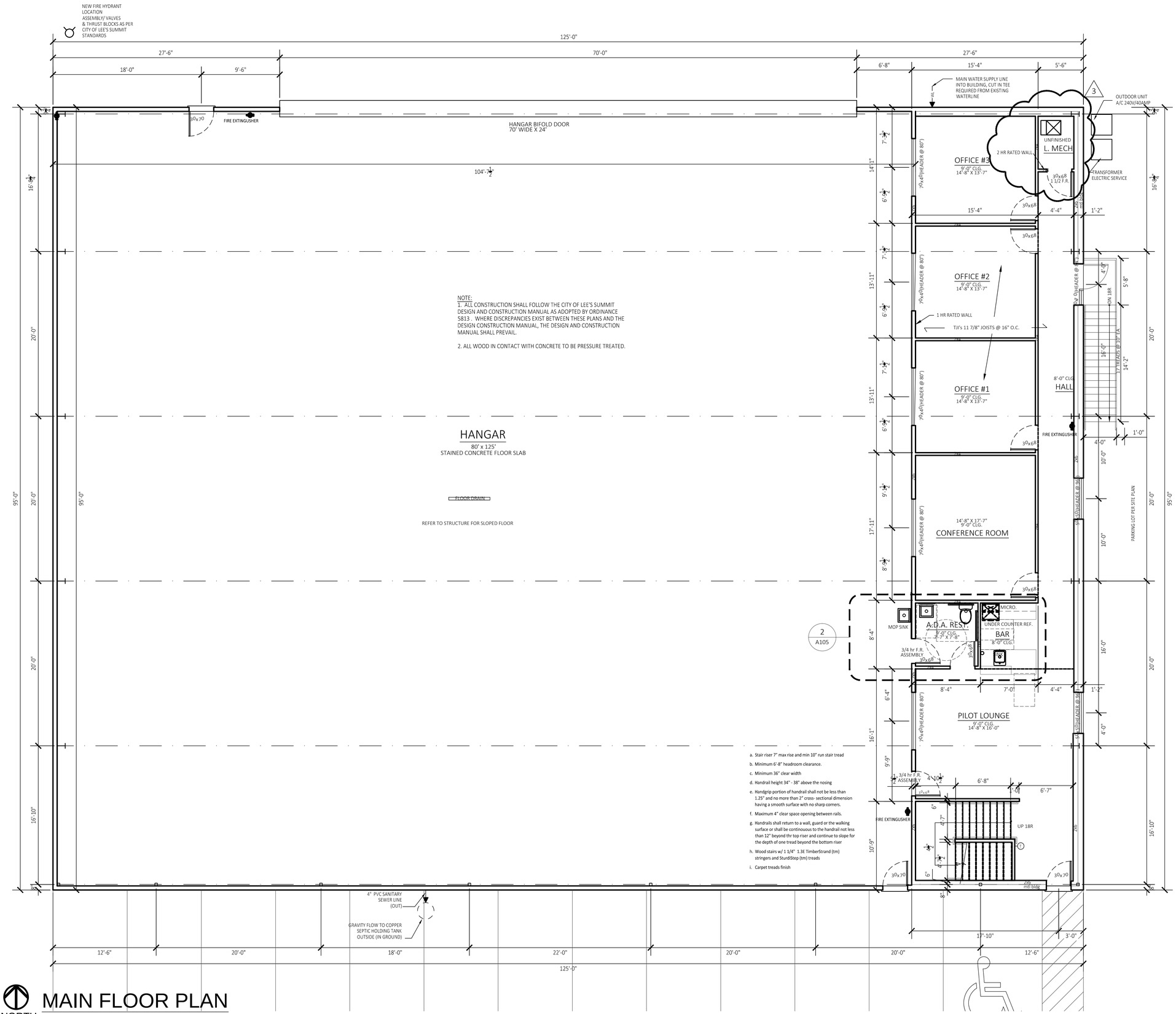

a. Stair riser 7" max rise and min 10" run stair tread
b. Minimum 6'-8" headroom clearance.
c. Minimum 36" clear width
d. Handrail height 34" - 38" above the nosing
e. Handgrip portion of handrail shall not be less than 1.25" and no more than 2" cross- sectional dimension having a smooth surface with no sharp corners.
f. Maximum 4" clear space opening between rails.
g. Handrails shall return to a wall, guard or the walking surface or shall be continuous to the handrail not less than 12" beyond thr top riser and continue to slope for the depth of one tread beyond the bottom riser
h. Wood stairs w/ 1 1/4" 1.3E TimberStrand (tm) stringers and SturdiStep (tm) treads
i. Carpet treads finish

MAIN FLOOR PLAN

SCALE 3/16"=1'-0"

STATE OF MISSOURI
BRYSON CRAIG SHAW
NUMBER A-3013
REGISTERED ARCHITECT
6/18/20

Signature BUILDERS KC,LLC

Signature Builders KC, LLC
2751 NE Douglas St. - Suite R
Lee's Summit, Missouri 64064
Phone: (816) 215-0891

Website:
www.sb-kc.net

New Airplane Hangar
at Lees Summit Airport
2751 NE DOUGLAS ST, UNIT V
LEES SUMMIT, MO 64064

SHAW HOFSTRA + ASSOCIATES
1800 CENTRAL STREET, SUITE 203
KANSAS CITY, MISSOURI 64108
P: 816.421.0505
ARCHITECTURAL CORPORATION
Certificate of Authority No. 00111130

This document, and all plans, specifications,and other information contained therein, are the exclusive property of SHAW HOFSTRA + ASSOCIATES. These documents are delivered and accepted by you in trust and on the expressed condition that neither these documents or the information contained therein will be copied, reproduced, or delivered to others, except copies stamped "CONFIDENTIAL — NOT FOR CONSTRUCTION/PROPERTY OF SHAW HOFSTRA + ASSOCIATES." No reproducible copies shall be distributed without the express written consent of SHAW HOFSTRA + ASSOCIATES. The design represented by these documents and plans is the exclusive property, design, and concepts of SHAW HOFSTRA + ASSOCIATES and may not be used or copied without the express written consent of SHAW HOFSTRA + ASSOCIATES.

SHAW HOFSTRA + ASSOCIATES © 2020

CAD Construction Documents
Voice / Text : 913.638.3241
mpspencer@sbcglobal.net
Residential AutoCAD Drafting and Design Services

No.	Description	Date
2	2nd City Comments	6/24/2020
3	3rd City Comments	7/8/2020

CONSTRUCTION DOCUMENTS

Project Number	LS V
Date	2020 JUNE 19
Drawn By	CCD
Checked By	SBKC

A 101

SHEET SIZE: 24" x 36"

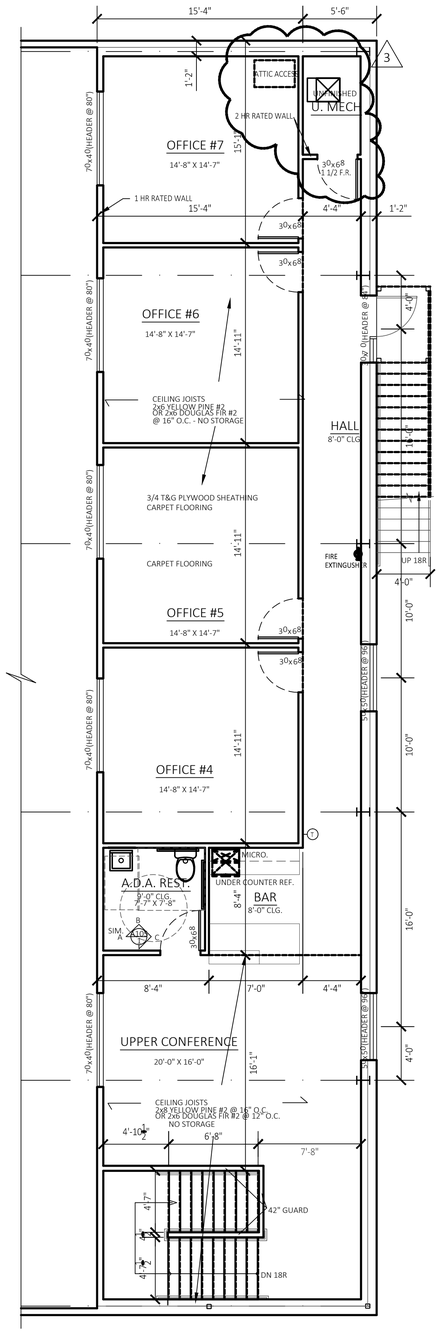

MEZZANINE FLOOR PLAN

SCALE 3/16"=1'-0"

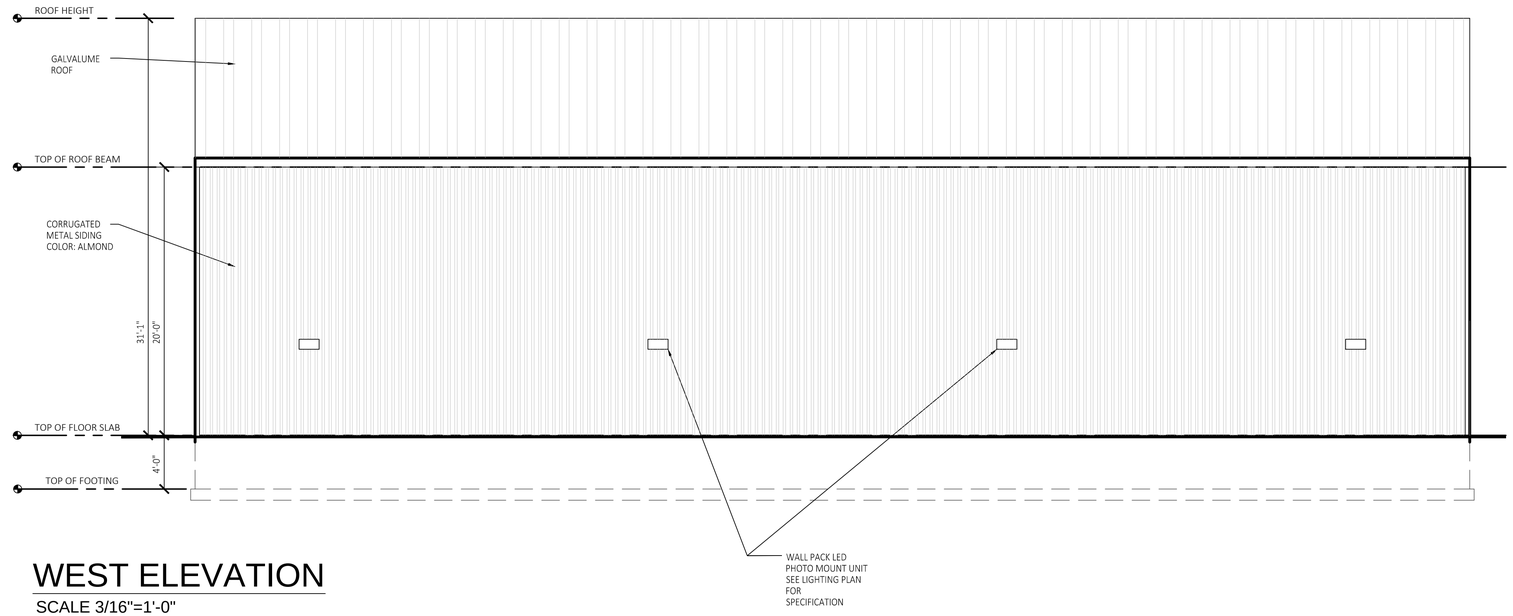

WEST ELEVATION

SCALE 3/16"=1'-0"

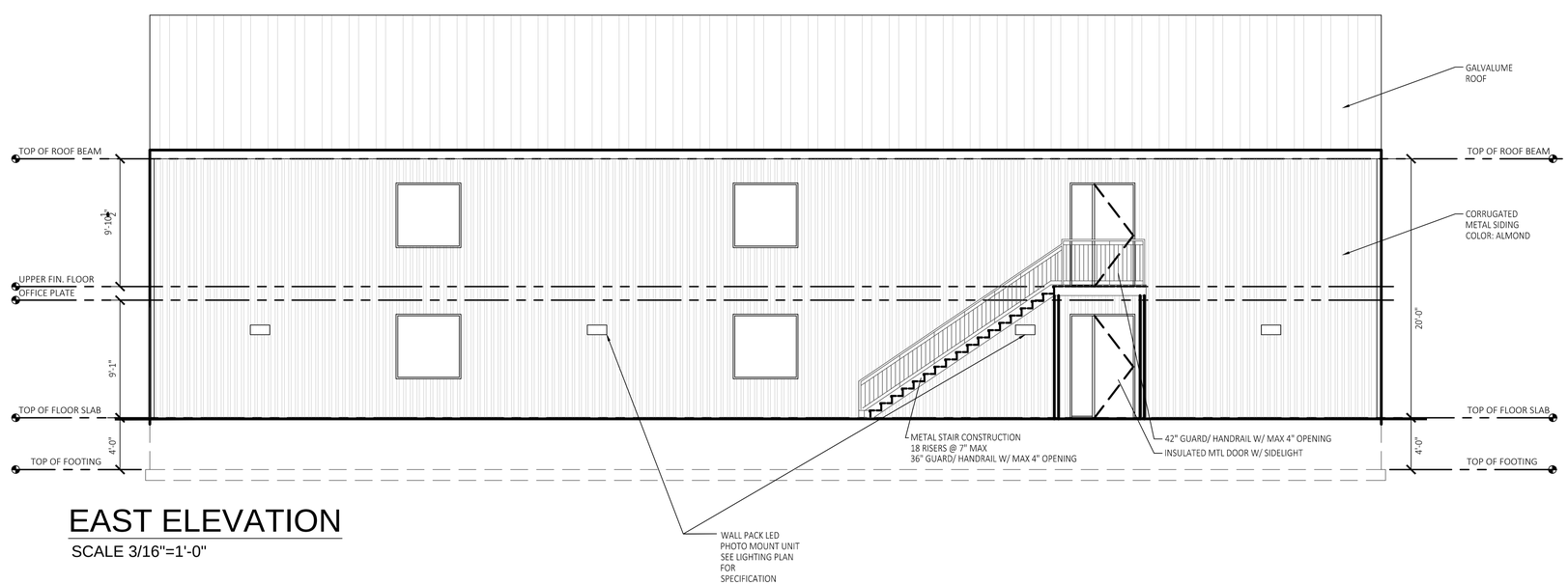

EAST ELEVATION

SCALE 3/16"=1'-0"

STATE OF MISSOURI
BRYSON CRAIG SHAW
NUMBER A-3013
REGISTERED ARCHITECT
6/18/20

Signature BUILDERS KC, LLC

Signature Builders KC, LLC
2751 NE Douglas St. - Suite R
Lee's Summit, Missouri 64064
Phone: (816) 215-0891

Website:
www.sb-kc.net

New Airplane Hangar
at Lees Summit Airport
2751 NE DOUGLAS ST, UNIT V
LEES SUMMIT, MO 64064

SH ASSOCIATES

SHAW HOFSTRA + ASSOCIATES
1800 CENTRAL STREET, SUITE 203
KANSAS CITY, MISSOURI 64108
P: 816.421.0505
ARCHITECTURAL CORPORATION
Certificate of Authority No. 00111130

This document, and all plans, specifications,and other information contained therein, are the exclusive property of SHAW HOFSTRA + ASSOCIATES. These documents are delivered and accepted by you in trust and on the expressed condition that neither these documents or the information contained therein will be copied, reproduced, or delivered to others, except copies stamped "CONFIDENTIAL - NOT FOR CONSTRUCTION/PROPERTY OF SHAW HOFSTRA + ASSOCIATES." No reproducible copies shall be distributed without the express written consent of SHAW HOFSTRA + ASSOCIATES. The design represented by these documents and plans is the exclusive property, design, and concepts of SHAW HOFSTRA + ASSOCIATES and may not be used or copied without the express written consent of SHAW HOFSTRA + ASSOCIATES.

SHAW HOFSTRA + ASSOCIATES © 2020

CAD Construction Documents
Voice / Text : 913.638.3241
mpspencer@bcglobal.net
Residential AutoCAD Drafting
and Design Services

No.	Description	Date
2	2nd City Comments	6/24/2020
3	3nd City Comments	7/8/2020

CONSTRUCTION DOCUMENTS

Project Number	LS V
Date	2020 JUNE 19
Drawn By	CCD
Checked By	SBKC

A 102

SHEET SIZE: 24" x 36"

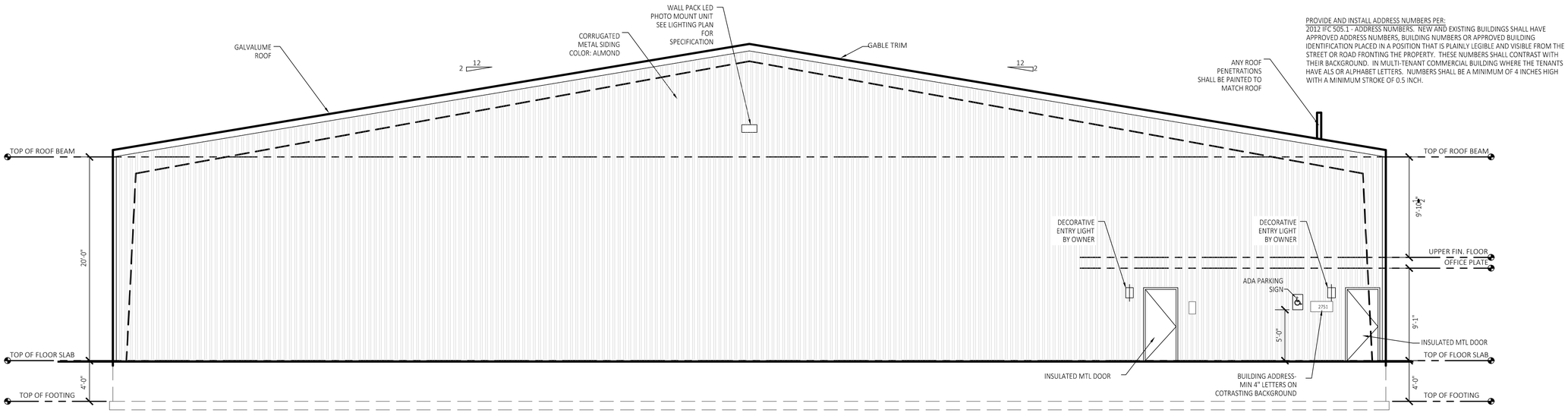

SOUTH ELEVATION

SCALE 3/16"=1'-0"

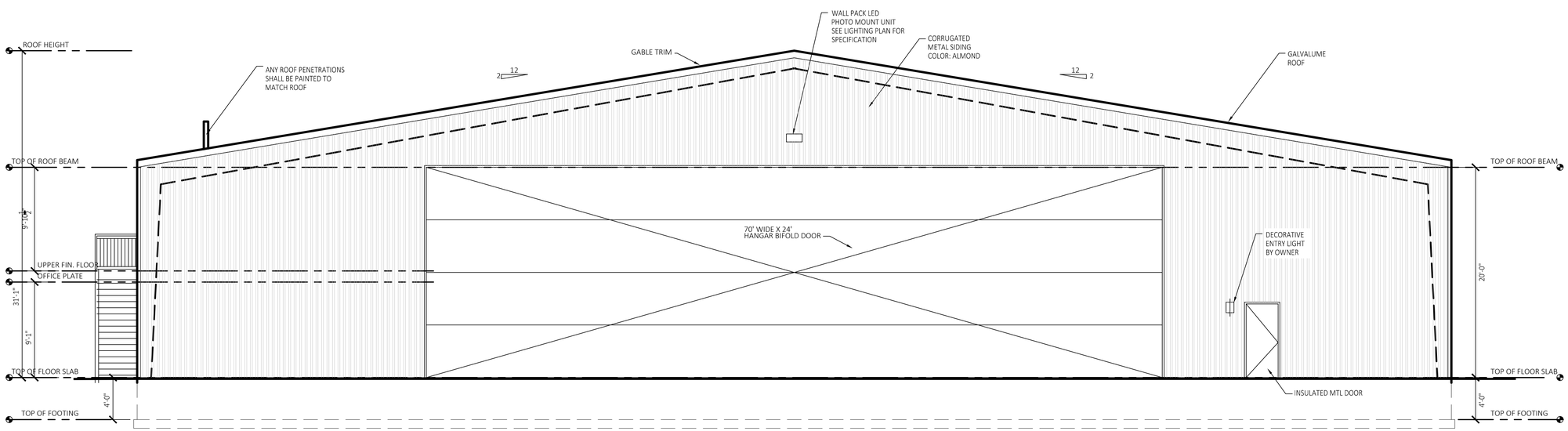

NORTH ELEVATION

SCALE 3/16"=1'-0"

STATE OF MISSOURI
BRYSON CRAIG SHAW
NUMBER A-3013
REGISTERED ARCHITECT
6/18/20

Signature BUILDERS KC, LLC

Signature Builders KC, LLC
2751 NE Douglas St. - Suite R
Lee's Summit, Missouri 64064
Phone: (816) 215-0891

Website:
www.sb-kc.net

New Airplane Hangar
at Lees Summit Airport
2751 NE DOUGLAS ST, UNIT V
LEES SUMMIT, MO 64064

SH ASSOCIATES

SHAW HOFSTRA + ASSOCIATES
1800 CENTRAL STREET, SUITE 203
KANSAS CITY, MISSOURI 64108
P: 816.421.0505
ARCHITECTURAL CORPORATION
Certificate of Authority No. 00111130

This document, and all plans, specifications,and other information contained therein, are the exclusive property of SHAW HOFSTRA + ASSOCIATES. These documents are delivered and accepted by you in trust and on the expressed condition that neither these documents or the information contained therein will be copied, reproduced, or delivered to others, except copies stamped "CONFIDENTIAL - NOT FOR CONSTRUCTION/PROPERTY OF SHAW HOFSTRA + ASSOCIATES." No reproducible copies shall be distributed without the express written consent of SHAW HOFSTRA + ASSOCIATES. The design represented by these documents and plans is the exclusive property, design, and concepts of SHAW HOFSTRA + ASSOCIATES and may not be used or copied without the express written consent of SHAW HOFSTRA + ASSOCIATES.

SHAW HOFSTRA + ASSOCIATES © 2020

CAD Construction Documents
Voice / Text : 913.638.3241
mpspencer@sbcglobal.net
Residential AutoCAD Drafting
and Design Services

No.	Description	Date
	2nd City Comments	6/24/2020
3	3nd City Comments	7/8/2020

CONSTRUCTION DOCUMENTS

Project Number	LS V
Date	2020 JUNE 19
Drawn By	CCD
Checked By	SBKC

A 103

SHEET SIZE: 24" x 36"

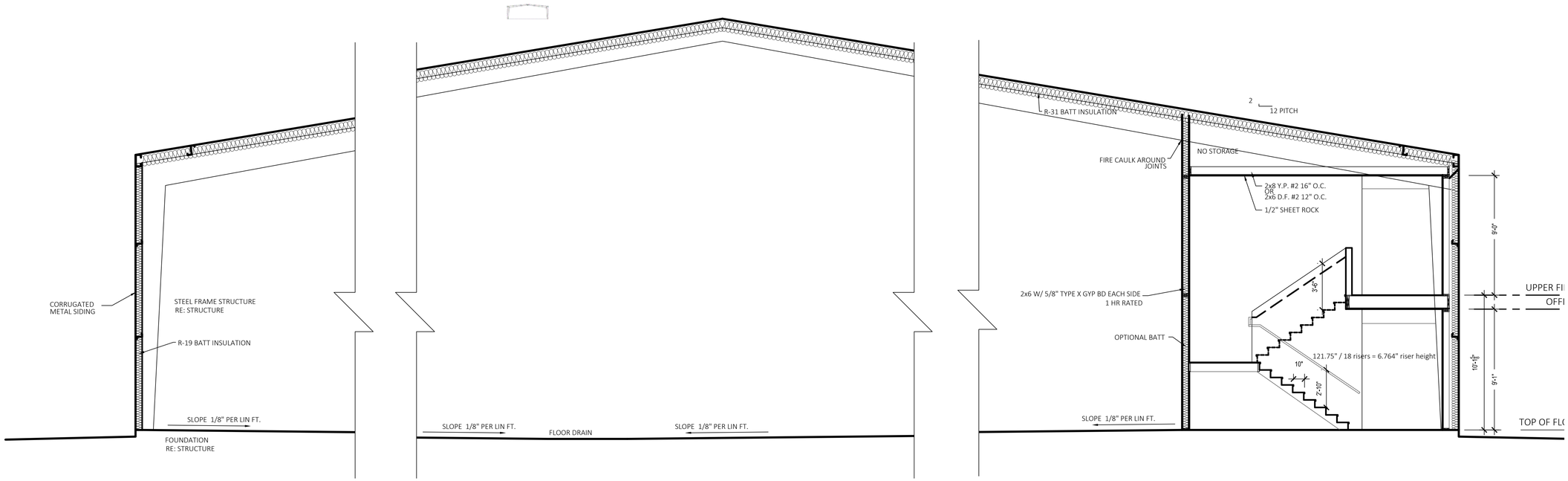

BLDG SECTION

SCALE 1/4"=1'-0"

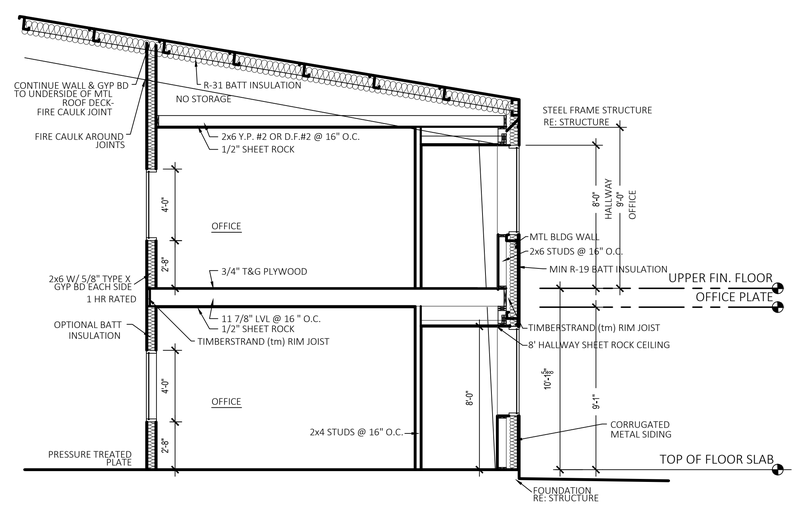

BLDG SECTION @ MEZZANINE

SCALE 1/4"=1'-0"

STATE OF MISSOURI
BRYSON CRAIG SHAW
NUMBER A-3013
REGISTERED ARCHITECT
6/18/20

Signature BUILDERS KC, LLC

Signature Builders KC, LLC
2751 NE Douglas St. - Suite R
Lee's Summit, Missouri 64064
Phone: (816) 215-0891

Website:
www.sb-kc.net

New Airplane Hangar
at Lees Summit Airport
2751 NE DOUGLAS ST, UNIT V
LEES SUMMIT, MO 64064

SHAW HOFSTRA + ASSOCIATES
1800 CENTRAL STREET, SUITE 203
KANSAS CITY, MISSOURI 64108
P: 816.421.0505
ARCHITECTURAL CORPORATION
Certificate of Authority No. 00111130

This document, and all plans, specifications,and other information contained therein, are the exclusive property of SHAW HOFSTRA + ASSOCIATES. These documents are delivered and accepted by you in trust and on the expressed condition that neither these documents or the information contained therein will be copied, reproduced, or delivered to others, except copies stamped "CONFIDENTIAL - NOT FOR CONSTRUCTION/PROPERTY OF SHAW HOFSTRA + ASSOCIATES." No reproducible copies shall be distributed without the express written consent of SHAW HOFSTRA + ASSOCIATES. The design represented by these documents and plans is the exclusive property, design, and concepts of SHAW HOFSTRA + ASSOCIATES and may not be used or copied without the express written consent of SHAW HOFSTRA + ASSOCIATES.

SHAW HOFSTRA + ASSOCIATES © 2020

CAD Construction Documents
Voice / Text : 913.638.3241
mpspencer@bcglobal.net
Residential AutoCAD Drafting
and Design Services

No.	Description	Date
2	2nd City Comments	6/24/2020
3	3nd City Comments	7/8/2020

CONSTRUCTION DOCUMENTS

Project Number	LS V
Date	2020 JUNE 19
Drawn By	CCD
Checked By	SBKC

A 104

SHEET SIZE: 24" x 36"

SCHWEISS DOORS — **BIFOLD DOOR SPECS** — A-2 SPEC SHEET

PHONE: 507-426-8273 / FAX: 507-426-7408 / SchweissDoors.com

Order Number:				Bid Number:		91019-TB		Bid Date:		4/24/20
Door Width	Door Height	Wdg.	Overall Height	Door Style	Drive Type	Lift Type	Truss	Hinge Style	Tot W - Inches	Tot H - Inches
70'-0.00"	20'-0.00"	54"	24'-6.00"	SCHWEISS	Bottom Drive	Strap Lift	Internal	Single Hinges	844"	294"

☒ ***PRELIMINARY SPECS*** - These are PRELIMINARY WEIGHTS that may change due to Final Engineering, if you pass these on to your building company please inform them that these are not the FINAL WEIGHTS. DO NOT Manufacture Building Header/Columns using these PRELIMINARY SPEC WEIGHTS.

☐ ***FINAL SPECS*** - AS OF 4/24/20 Will be provided when the door contract and engineering is finalized.

Preliminary - Design Criteria - Required Door Information

Building Code	**2018 IBC**	Building Code - *(Default is 2012 IBC)*
Wind Speed	**115 mph**	3 second gust - *(Default is 115 mph)*
Risk Category	**II**	II, III, or IV - *(Default is II)* - *(2009 IBC = Standard Occupancy)*
Wind Exposure	**C**	Exposure - *(Default is C)*
Wind Type	**Main Wind**	Component Wind or Main Wind Force (MWFRS) - (Component if less than 700sqft.)
Enclosure	**Enclosed**	Enclosed or Partially Enclosed - *(Default is Enclosed)*
Topographic Factor - Kzt	**1**	Must Be Provided by the Engineer of Record- *(Default is 1)*
Building Height	**25'**	Mean Roof Height or Eave Height for Building with Roof Slope of 10 Degrees or Less.
Roof Slope	**1 : 12**	Roof Slope - *(Default is 1 : 12)*
Door Operational Wind Speed	**30 mph**	**Maximum Wind Speed for Door Operation is: 30 mph** **Do not operate door if wind speed exceeds the maximum door operating speed. Door must be closed with floor pins and locks engaged when un-attended or when wind speed is expected to exceed the maximum door operating speed.**

Preliminary - Technical Information For Your Bi-Fold Door

A1-	**13**	Number of Hinges
A2-	**10**	Number of Lift Points Distributed Equally.
A3-	**460-3PH**	Electrical System with Up/Stop/Down Switch and Power Unit on the **(LI) - Left/Inside**

WARNING - These are PRELIMINARY WEIGHTS that may change due to Final Engineering, if you pass these on to your building company please inform them that these are not the FINAL WEIGHTS. DO NOT Manufacture Building Header/Columns using these PRELIMINARY SPEC WEIGHTS.

Door Weights

B1-	**10193 lbs**	Structural Framing Weight
B2-	**1706 lbs**	Exterior Sheeting & Trim Weight (29ga. = 0.82 psf. -- 26ga. = 0.99 psf.)
B3-		Liner Sheeting & Trim Weight (29ga. = 0.82 psf. -- 26ga. = 0.99 psf.) / 2 If Only Bottom Half
B4-		Insulation Weight (4" Blanket = 0.5 psf. -- 6" Blanket = 0.65 psf.)
B5-		Optional - added accessories
B6-	**11899 lbs**	**Estimated Total Door Weight**

WARNING - Schweiss manufactures the door based on the listed weights above. DO NOT modify the weight of the door.

BI-FOLD DOOR SPEC

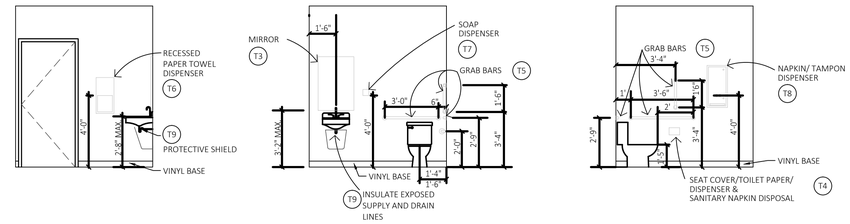

A B C

1 HANDICAP RESTROOM - INTERIOR ELEVATIONS

SCALE: 1/4"=1'-0"

T1 ADA COMPLIANT PORCELAIN TOILET AMERICAN STANDARD OR EQUAL W/ HANDLE ON DOOR OPENING SIDE

T2 NOT USED

T3 ADA COMPLIANT FRAMED MIRROR, SURFACE MOUNTED

T4 SEAT COVER DISPENSER/NAPKIN DISPOSAL AND TOILET TISSUE DISPENSER BOBRICK CLASSIC SERIES RECESSED DUAL UNIT MODEL NO. B-3574

T5 ADA GRAB BARS 18"L, 36"L & 42" L 34" A.F.F. C OF BAR BOBRICK MODEL NO. **B-6806X**18, B-6806X36 AND B-6806X42, OR EQUAL W/ SS FINISH

T6 ADA COMPLIANT PAPER TOWEL DISPENSER BOBRICK STAINLESS STEEL TRASH RECEPTACLE UNIT #8369, OR EQUAL

T7 ADA COMPLIANT SOAP DISPENSER, WALL HUNG

T8 CLASSIC SERIES RECESSED NAPKIN/TAMPON VENDOR 25 CENT OPERATION AND 52" A.F.F. TO HIGHEST OPERABLE PART BOBRICK MODEL NO. B-3706 OR EQUAL W/ SS FINISH

T9 ZURN LAVATORY SINK SHIELD OR ADA PROTECTIVE COVERING

2

BATHROOM FINISH MATERIALS:
FLOOR: SEALED CONCRETE FLOOR @ LOWER RESTROOM
VINYL OR CERAMIC TILE FLOOR @ MEZZANINE LEVEL
WALL: 1/2" MOISTURE RESISTANCE " GREENBOARD" GYPSUM BOARD
W/ EPOXY SATIN "WASHABLE" PAINT FINISH
- WATERPROOF JOINTS
WALL BASE: 4" VINYL BASE
CEILING: OPTION A- 1/2" MOISTURE RESISTANCE "GREENBOARD" GYPSUM BOARD
W/ LATEX "WASHABLE" PAINT
OPTION B- 2x2 WASHABLE LAY-IN CEILING TILE W/ METAL "T" GRID SUPPORT

3

WALL FINISH @ MOP SINK
WALL SHALL HAVE EPOXY SATIN "WASHABLE" PAINT FINISH-
SMOOTH, HARD AND NON-ASORBANT WALL FINSIH SURFACE WITH-IN TWO FEET OF MOP SINK AND MINIMUM 4' HIGH ABOVE FLOOR.

PROVIDE AND INSTALL BATHROOM FIXTURES AND ACCESSORIES PER:
2012 ICC A117.1 - 2009 604.5.1 - FIXED SIDE WALL GRAB BARS. FIXED SIDE WALL GRAB BARS SHALL BE 42 INCHES MINIMUM IN LENGTH LOCATED 12 INCHES MAXIMUM FROM THE REAR WALL AND EXTENDING 54 INCHES MINIMUM FROM THE REAR WALL. IN ADDITION, A VERTICAL GRAB BAR 18 INCHES MINIMUM IN LENGTH GTH SHALL BE MOUNTED WTH THE BOTTOM OF THE BAR LOCATED 39 INCHES MINIMUM AND 41 INCHES MAXIMUM ABOVE THE FLOOR, AND WITH THE CENTER LINE OF THE BAR LOCATED 39 INCHES MINUMUM AND 41 INCHES MAXIMUM FROM THE REAR WALL.
ALL PLUMBING FIXTURES AND TOILET ACCESSORIES TO BE ADA COMPLIANT, INSTALLED AS INDICATED AND IN COMPLIANCE WITH THE ADA AND PER MANUFACTURER'S GUIDELINES. INSTALL STEEL BACKER PLATES IN WALL ASSEMBLY TO SUPPORT GRAB BARS. COMPLETED ASSEMBLY CAPABLE OF SUPPORTING A MINIMUM VERTICAL OR HORIZONTAL FORCE OF 250 LBS. WITHOUT DAMAGE TO ANY PART OF THE ASSEMBLY.

2 RESTROOM FIXTURES AND ACCESSORIES LEGEND AND SPECIFICATIONS

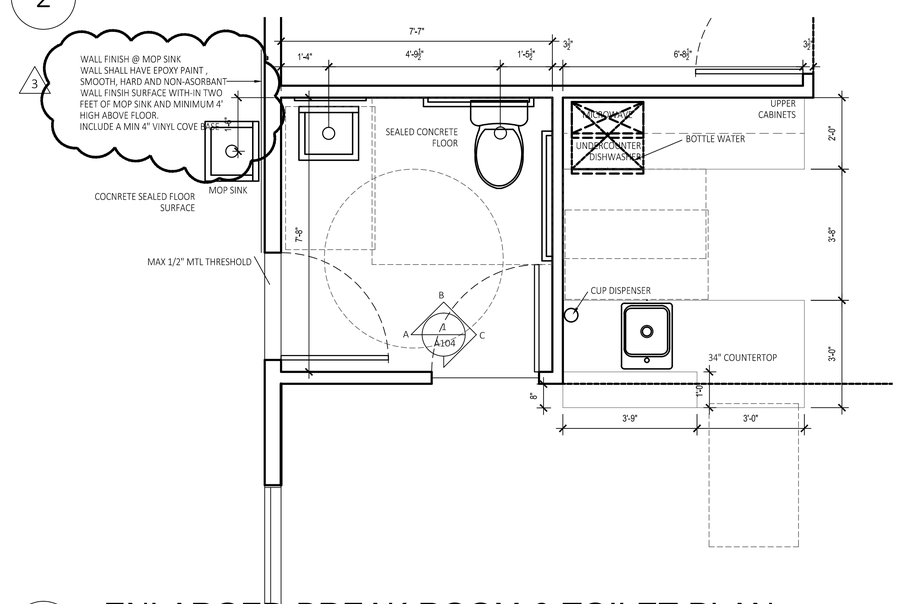

3 ENLARGED BREAK ROOM & TOILET PLAN

SCALE: 1/2"=1'-0"

DOOR NOTES:
1. G.C. TO FURNISH LOCK SETS, LEVERS, STRIKE PLATES, BUMBERS, AND ALL OTHER ITEMS TO PROVIDE A COMPLETE AND FUNCTIONING HARDWARE PACKAGE. REFER TO OWNER FOR ALL ITEMS
2. PACKAGE IS SUBJECT TO ADDITIONAL ELECTRONIC/ SECURITY DEVICES. G.C. TO COORDINATE
3. PROVIDE PUCK STYLE STOPS AT ALL EXTERIOR DOORS.
4. PROVIDE WEATHERSTRIPPING AT ALL EXTERIOR DOORS.
5. PROVIDE SAFETY GLAZING AS REQUIRED BY CODE.
6. ALL THRESHOLDS TO BE ADA COMPLIANT: THE FINISH FLOOR ELEVATION ON EITHER SIDE OF A DOOR SHALL NOT BE MORE THAN 1/2" LOWER THAN THE THRESHOLD OF THE DORWAY. THRESHOLD SHALL NOT BE BEVELED MORE THAN 1/4"
7. MAXIMUM DOOR OPENING EFFORTS
a. FIRE DOORS: PER LOCAL AUTHORITY
b. INTERIOR HINGED DOORS: 5 LBS
c. EXTEIOR HINGED DOORS: 5 lbs
8. ALL DOORS PROVIDED WITH LATCHING HARDWARE SHALL BE EQUIPPED WITH SINGLE-EFFORT, NON GRASP HARDWARE. (I.E. LEVER)
9. PROVIDE CONTINOUS CAULK AT INTERIOR & EXTERIOR PERIMETER OF EXTERIOR WALL FRAMES.
10. OVERHEAD BI-FOLD DOOR TO HAVE INSULATED PANELS, SIDE & TOP WEATHER STRIP, AND BOTTOM FLEXIBLE PVC SEAL.
11. IBC 1010.1.2.1 DIRECTION OF SWING INWARD SWING WITH A OCCUPANT LOAD OF 49 OR LESS.
12. PROVIDE DRIP CAP AT ALL EXTERIOR DOORS
13. PROVIDE DOOR SWEEP AT ALL DOORS
14. REFER TO PLAN FOR DOOR OPEING SIZE

IBC 716.2.9.5 LABELING
FIRE RATED GLAZING SHALL BEAR A LABEL OR OTHER IDENTIFICATION SHOWING THE NAME & MANUFACTURER, THE TEST STANDARD AND INFORMATION REQUIRED IN TABLE 716.1(1) THAT SHALL BE ISSUED BY AN APPROVED AGENCY AND SHALL BE PRENATALLY IDENTIFIABLE ON THE GLAZING.

IBC 716.3.2.1 INTERIOR FIRE WINDOW ASSEMBLIES
716.3.2.1.1 WHERE 3/4 HOUR-FIRE-PROTECTION WINDOW ASSEMBLIES PERMITTED
716.3.2.1.2 AREA LIMITATIONS
THE TOTAL AREA OF THE GLAZING IN FIRE-PROTECTION-RATED WINDOW ASSEMBLY SHALL NOT EXCEED 25 PERCENT OF THE AREA OF A COMMON WALL WITH ANY ROOM

WINDOWS TO BE LABELED

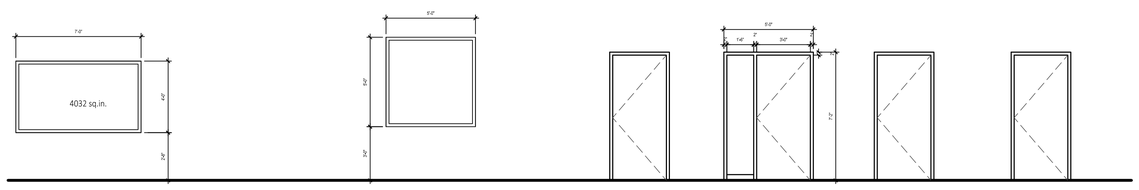

45 MIN FIRE RATED INTERIOR WINDOW ASSSMBLY
FIXED WINDOW
METAL FRAME

EXTERIOR WALL WINDOW ASSEMBLY
FIXED WINDOW
1" INSULATED GLAZING W/ LOW E
METAL FRAME

EXTERIOR DOOR

INSULATED METAL DOOR
W/ METAL FRAME
PAINTED

SCHLAGE SERES CS210
INTERCONNECTED LOCK
(SINGLE MOTION EGRESS)

EXTERIOR DOOR W/ SIDELITE

INSULATED METAL DOOR
1" INSULATED TEMPERD/
SAFETY GLAZING W/ LOW E
METAL FRAME
PAINTED

SCHLAGE SERIES CS210
INTERCONNECTED LOCK
(SINGLE MOTION EGRESS)

3/4 HR FIRE RATED
INTERIOR DOOR ASSEMBLY
SOLID WOOD CORE DOOR
STAINED
METAL FRAME
PRIVACY LOCK @ TOILET RM

INTERIOR DOOR
SOLID WOOD CORE
STAINED

PRIVACY LOCK @ BATHROOM

WINDOW SCHEDULE

DOOR SCHEDULE

STATE OF MISSOURI
BRYSON CRAIG SHAW
NUMBER A-3013
REGISTERED ARCHITECT
6/18/20

Signature BUILDERS KC, LLC

Signature Builders KC, LLC
2751 NE Douglas St. - Suite R
Lee's Summit, Missouri 64064
Phone: (816) 215-0891

Website:
www.sb-kc.net

New Airplane Hangar
at Lees Summit Airport
2751 NE DOUGLAS ST, UNIT V
LEES SUMMIT, MO 64064

SH ASSOCIATES

SHAW HOFSTRA + ASSOCIATES
1800 CENTRAL STREET, SUITE 203
KANSAS CITY, MISSOURI 64108
P: 816.421.0505
ARCHITECTURAL CORPORATION
Certificate of Authority No. 00111130

This document, and all plans, specifications,and other information contained therein, are the exclusive property of SHAW HOFSTRA + ASSOCIATES. These documents are delivered and accepted by you in trust and on the expressed condition that neither these documents or the information contained therein will be copied, reproduced, or delivered to others, except copies stamped "CONFIDENTIAL - NOT FOR CONSTRUCTION/PROPERTY OF SHAW HOFSTRA + ASSOCIATES." No reproducible copies shall be distributed without the express written consent of SHAW HOFSTRA + ASSOCIATES. The design represented by these documents and plans is the exclusive property, design, and concepts of SHAW HOFSTRA + ASSOCIATES and may not be used or copied without the express written consent of SHAW HOFSTRA + ASSOCIATES.

SHAW HOFSTRA + ASSOCIATES © 2020

CAD Construction Documents
Voice / Text : 913.638.3241
mpspencer@sbcglobal.net
Residential AutoCAD Drafting
and Design Services

No.	Description	Date
	2nd City Comments	6/24/2020
2	3rd City Comments	7/8/2020

CONSTRUCTION DOCUMENTS

Project Number	LS V
Date	2020 JUNE 19
Drawn By	CCD
Checked By	SBKC

A105

SHEET SIZE: 24" x 36"

DESIGN CRITERIA:

1. LIVE LOADS [UNIFORM (PSF) / POINT LOADS (KIPS)]:
   -- ROOF:.....20 PSF / 1.0 K

2. ROOF SNOW LOAD:
   -- GROUND SNOW LOAD (Pg):.....20 PSF
   -- FLAT ROOF SNOW LOAD (Pf):.....20 PSF
   -- SNOW EXPOSURE FACTOR (Ce):.....1.0
   -- SNOW LOAD IMPORTANCE FACTOR (I):.....1.0
   -- THERMAL FACTOR (Ct):.....1.0

3. WIND DESIGN DATA:
   -- BASIC WIND SPEED (3 SEC GUST):.....115 MPH
   -- WIND IMPORTANCE FACTOR (I):.....1.0
   -- WIND EXPOSURE:.....C
   -- BUILDING ENCLOSURE:.....ENCLOSED
   -- INTERNAL PRESSURE COEFF:.....0.18

   -- COMPONENTS AND CLADDING WIND PRESSURE: PER ASCE 7-16

4. EARTHQUAKE DESIGN DATA:
   -- SEISMIC IMPORTANCE FACTOR (I):.....1.00
   -- BUILDING OCCUPANCY CATEGORY:.....II
   -- MAPPED SPECTRAL RESP ACCEL (Ss / S1):.....0.113 / 0.066
   -- SITE CLASS:.....D
   -- SPECTRAL RESPONSE COEFF (Sds / Sd1):.....0.120 / 0.106
   -- SEISMIC DESIGN CATEGORY:.....B
   -- SEISMIC FORCE RESISTING SYSTEM:.....
STEEL SYSTEMS NOT SPECIFICALLY DETAILED FOR SEISMIC RESISTANCE
   -- DESIGN BASE SHEAR:.....6.92 K
   -- SEISMIC RESPONSE COEFF (Cs):.....0.039
   -- RESPONSE MODIFICATION FACTOR (R):.....3.0
   -- ANALYSIS PROCEDURE:.....ELF

5. ADDITIONAL PRE-ENGINEERED METAL BLDG CRITERIA
   A. LOADS
   -- COLLATERAL ROOF DEAD LOAD: . .....4 PSF

   B. MEMBER DEFLECTIONS (LIVE LOAD)
   -- ROOF, NOT SUPPORTING CEILING..... L/180
   -- ROOF, SUPPORTING PLASTER CEILING.....L/360
   -- ROOF, SUPPORTING OTHER CEILING.....L/240
   -- WALL GIRT, BACKING NON-BRITTLE FINISH.....L/180
   -- WALL GIRT, BACKING BRITTLE FINISH (MASONRY)..L/600

   C. MEMBER DEFLECTIONS (DEAD + LIVE LOAD)
   -- ROOF, SUPPORTING PLASTER CEILING.....L/240
   -- ROOF, SUPPORTING OTHER CEILING.....L/180

   D. FRAME DRIFT (BRACED, PORTAL, WIND COL)
   -- NON BRITTLE EXTERIOR FINISH.....H/120
   -- BRITTLE EXTERIOR FINISH.....H/400

STRUCTURAL GENERAL NOTES:

1. DESIGN AND CONSTRUCTION SHALL CONFORM TO THE "INTERNATIONAL BUILDING CODE, 2018 EDITION". REFER TO THE SPECIAL STRUCTURAL INSPECTION NOTES FOR ADDITIONAL REQUIREMENTS.

2. CONTRACTOR TO VERIFY ALL DIMENSIONS, ELEVATIONS AND EXISTING CONDITIONS AND REPORT ANY DISCREPANCIES TO THE ARCHITECT IMMEDIATELY.

3. IF DISCREPANCIES EXIST BETWEEN STRUCTURAL PLANS, ARCHITECTURAL PLANS, OTHER PLANS, OR SPECIFICATIONS, THE CONTRACTOR OR SUBCONTRACTOR SHALL PROVIDE A WRITTEN REQUEST FOR CLARIFICATION FROM THE ARCHITECT AND/OR ENGINEER PRIOR TO PROCEEDING WITH THE WORK

4. THE STRUCTURE IS DESIGNED TO BE SELF-SUPPORTING AND STABLE AFTER THE BUILDING IS FULLY COMPLETED. IT IS SOLELY THE CONTRACTOR'S RESPONSIBILITY TO EXECUTE AND DETERMINE FINAL ERECTION PROCEDURES, SEQUENCING AND TO INSURE THE SAFETY OF THE BUILDING AND ITS COMPONENT PARTS DURING ERECTION. THIS INCLUDES WHATEVER SHORING, SHEETING, TEMPORARY BRACING, GUYING OR TIE DOWNS WHICH MIGHT BE NECESSARY.

5. THE STRUCTURE AND FOUNDATIONS ARE NOT DESIGNED FOR FUTURE EXPANSION.

6. FABRICATORS AND SUPPLIERS SHALL CLEARLY NOTE AND HIGHLIGHT CHANGES MADE IN SHOP DRAWINGS, WHICH DO NOT COMPLY WITH THE CONTRACT DOCUMENTS.

7. COLUMNS, BEAMS, JOISTS, OR TRUSSES SHALL NOT BE FIELD CUT OR TRIMMED FOR ANY REASON WITHOUT THE WRITTEN APPROVAL OF THE ARCHITECT/ENGINEER.

8. HOLES, PIPES, SLEEVES, ETC. NOT SHOWN ON THE DRAWINGS MUST BE REVIEWED BY THE ARCHITECT BEFORE PLACEMENT THROUGH STRUCTURAL MEMBERS.

9. IF MECHANICAL AND ELECTRICAL EQUIPMENT SIZES, WEIGHTS, OR LOCATIONS DO NOT COINCIDE WITH EQUIPMENT SHOWN ON THE PLANS, COORDINATE ADJUSTMENTS WITH THE ARCHITECT.

10. NO AREA OF THE STRUCTURE SHALL BE LOADED WITH CONSTRUCTION MATERIALS OR EQUIPMENT THAT EXCEEDS FINAL DESIGN CRITERIA.

11. BEAMS, COLUMNS, WALLS AND FOOTING CENTERS SHALL BE CENTERED UNDER SUPPORTING MEMBERS (TYPICAL UNLESS NOTED).

12. FOR DEFERRED SUBMITTALS (EXAMPLES: PREFABRICATED WOOD OR COLD FORMED STEEL JOISTS, PRECAST CONCRETE ELEMENTS, COLD FORMED FRAMING), SHOP DRAWINGS AND CALCULATIONS SEALED BY A STRUCTURAL ENGINEER LICENSED TO PRACTICE IN THE JURISDICTION OF THE PROJECT SHALL BE FURNISHED TO THE ENGINEER OF RECORD FOR REIVEW.

PRE-ENGINEERED METAL BUILDING GENERAL NOTES:

1. THE METAL BUILDING MANUFACTURER SHALL BE RESPONSIBLE FOR THE METAL BUILDING DESIGN. THE METAL BUILDING DESIGN AND CALCULATIONS SEALED BY AN ENGINEER LICENSED TO PRACTICE IN THE JURISDICTION OF THE PROJECT SHALL BE SUBMITTED TO THE OWNER'S REPRESENTATIVE FOR APPROVAL BEFORE FABRICATION AND APPROVED BEFORE ANY CONCRETE FOOTINGS ARE POURED. THE METAL BUILDING MANUFACTURER SHALL PROVIDE ALL ACTUAL COLUMN LOCATIONS AND LOADS AT THE FOUNDATIONS FOR DESIGN VERIFICATION INCLUDING WIND COLUMN/BRACING CONDITIONS.

2. THE METAL BUILDING DESIGN SHALL MEET ALL LOCAL CODE REQUIREMENTS.

3. ROOF LIVE LOADS, INCLUDING SNOW LOADS, SHALL NOT BE REDUCED. DESIGN ROOF AND ROOF MEMBERS FOR ALL REQUIRED UNBALANCED LOADS AND SNOW DRIFTING.

4. COLLATERAL ROOF LOADING IS IN ADDITION TO DEAD LOAD OF PRE-ENGINEERED BUILDING FRAMING, METAL DECK, AND INSULATION

5. CONTRACTOR TO VERIFY ALL BASE PL ELEVATIONS AND GROUTING REQUIREMENTS w/ METAL BUILDING SUPPLIER.

EARTHWORK AND FOUNDATIONS:

1. PRESUMPTIVE ALLOWABLE SOIL BEARING PRESSURE = 1500 PSF (PER IBC). GEOTECHNICAL ENGINEER TO CONFIRM MINIMUM BEARING VALUES HAVE BEEN MET PRIOR TO PLACING FOOTINGS.

2. ALL PERIMETER AND EXTERIOR FOOTINGS SHALL EXTEND AT LEAST 3'-0" BELOW FINAL ADJACENT GRADE. DEEPEN FOOTINGS AS REQUIRED TO PROVIDE THIS MINIMUM BOTTOM OF FOOTING.

3. SURFACE WATER SHALL NOT BE ALLOWED TO STAND ADJACENT TO OR DRAIN TOWARDS THE FOUNDATION UNDER ANY CIRCUMSTANCES. PAVEMENTS OR GRADED SOILS AT THE PERIMETER OF THE BUILDING, EXCEPT AS REQUIRED AT EXITS OR AS NOTED, SHALL BE SLOPED AWAY AT 5% OR 6" MIN FOR THE FIRST TEN FEET.

4. FOOTINGS MAY BE POURED TO NEAT LINES OF EXCAVATIONS PROVIDING VERTICAL LINES OF EXCAVATIONS CAN BE MAINTAINED DURING CONCRETE PLACEMENT.

5. FOUNDATION CONTRACTOR TO ENSURE PROPER ANCHOR ROD PROJECTION AND THAT ANCHOR RODS ARE HELD SECURELY IN POSITION PRIOR TO CONCRETE PLACEMENT. STRUCTURAL STEEL COLUMN ANCHOR RODS SHALL BE SET WITH A TEMPLATE

CONCRETE AND MASONRY REINFORCING STEEL:

1. ALL REINFORCING BARS SHALL MEET ASTM A615 GRADE 60.

2. ALL MESH SHALL MEET ASTM A-185: LAP A MINIMUM OF 8" OR ONE FULL MESH, WHICHEVER IS GREATER.

3. REINFORCING BARS QUANTITIES SHOWN ARE FOR ESTIMATING PURPOSES ONLY.

4. PROVIDE AND ADDITIONAL ALLOWANCE OF 1% OF THE TOTAL REINFORCING SHOWN ON THE FINAL DRAWINGS TO BE FABRICATED AND ERECTED DURING THE PROGRESS OF THE WORK AT THE DIRECTION OF THE STRUCTURAL ENGINEER. FOR THE ADDITIONAL REINFORCING ALLOWANCE, INCLUDE BOTH THE COST OF THE REINFORCING AND THE LABOR TO PLACE IT.

5. CONCRETE PROTECTION FOR REINFORCEMENT SHALL BE ¾" CLEAR FOR SLABS, 2" CLEAR FOR FORMED SURFACES AND 3" CLEAR FOR FOOTINGS (TYPICAL UNLESS NOTED).

6. CONTRACTOR SHALL VERIFY THAT ALL REINFORCEMENT, SLAB DOWELS, INSERTS, SLEEVES AND EMBEDDED ITEMS ARE PROPERLY LOCATED AND RIGIDLY SECURED PRIOR TO CONCRETE PLACEMENT, "WET STICKING" DOWELS WILL NOT BE ALLOWED.

7. REINFORCEMENT SHALL BE DETAILED IN ACCORDANCE WITH THE LATEST A.C.I. DETAILING MANUAL BY A QUALIFIED AND EXPERIENCED FIRM AND PERSON. PLACE AND SUPPORT REINFORCEMENT WITH ACCESSORIES: MAXIMUM SPACING - 48" CENTERS (PLASTIC-TIPPED LEGS FOR EXPOSED SURFACES). USE 3" SBP SUPPORTS AT ALL FOOTINGS.

CAST IN PLACE CONCRETE:

1. REQUIRED MINIMUM CONCRETE COMPRESSIVE STRENGTHS AT 28 DAYS:

   a. FOOTING, WALL, AND GRADEBEAM CONCRETE.....3000 PSI
   b. SLAB ON GRADE AND STRUC SLAB ABOVE GRADE.....3500 PSI

2. ALL CONCRETE MIX DESIGNS SHALL HAVE WATER TO CEMENT RATIOS LESS THAN 0.50, WITH A MAXIMUM 60/40 FINE TO COARSE AGGREGATE RATIO. CONCRETE MIX DESIGNS THAT DO NOT CONFORM TO THE ABOVE STANDARD AND/OR CONTAIN WATER REDUCING ADMIXTURES SHALL BE SUBMITTED WITH APPROPRIATE TEST DATA PER A.C.I.. ALL CONCRETE SHALL BE IN CONFORMANCE WITH THE LATEST A.C.I. 301 STANDARDS PUBLICATION.

3. EXTERIOR CONCRETE (FLOOR SLABS, WALLS, ETC) SHALL HAVE 6% (PLUS/MINUS 1%) ENTRAINED AIR.

4. CHAMFER ALL EXPOSED CONCRETE EDGES 3/4" (VERIFY WITH ARCHITECT).

5. NO ALUMINUM SHALL BE EMBEDDED IN ANY CONCRETE.

6. NO CALCIUM CHLORIDE SHALL BE USED IN CONCRETE

7. THE DESIGN, CONSTRUCTION, AND SAFETY OF ALL FORMWORK IS THE RESPONSIBILITY OF THE CONTRACTOR

8. ALL CONCRETE IS REINFORCED UNLESS SPECIFICALLY NOTED AS UNREINFORCED. REINFORCE ALL CONCRETE NOT OTHERWISE SHOWN WITH THE SAME REINFORCING AS SIMILAR SECTIONS OR AREAS.

9. CONSTRUCTION JOINTS IN GRADE BEAMS, CONTINUOUS FOOTINGS, AND WALLS THAT DO NOT CHANGE DIRECTION SHALL BE SPACED NO GREATER THAN 60'-0". INTERMEDIATE CONTROL JOINTS SHALL BE SPACED AT 25'-0" MAX FOR WALLS. CONTROL JOINTS IN WALLS SHALL ALSO BE LOCATED 15'-0" FROM CORNERS AND AT CHANGES IN WALL THICKNESS

10. WHERE FRESH CONCRETE IS DEPOSITED AGAINST HARDENED CONCRETE (GREATER THAN 8 HRS OLD), CLEAN EXISTING SURFACE OF LAITANCE AND FOREIGN MATERIAL AND DAMPEN THE EXISTING SURFACE. IF REQUIRED, ROUGHEN EXISTING CONCRETE TO ¼" AMPLITUDE.

11. SLABS ON GRADE SHALL BE 5" THICK MINIMUM ON 4" OF GRANULAR FILL. REINF SLAB WITH 6 X 6-W2.9xW2.9 W.W.F. IN UPPER 1/3 OF SLAB THICKNESS. SUPPLY WWF IN SHEETS. AT INTERIOR SLABS, AN 10 MIL VAPOR BARRIER SHALL BE PLACED BETWEEN THE CONCRETE AND GRANULAR BASE AND CARE SHOULD BE TAKEN DURING CURING TO PREVENT SLAB CURLING. THIS NOTE SHALL BE TYPICAL UNLESS NOTED OTHERWISE

12. SAW CUT JOINTS OR KEYED CONSTRUCTION JOINTS IN SLABS ON GRADE SHALL BE SPACED TO DIVIDE THE SLAB INTO PANELS NOT TO EXCEED 225 SQUARE FEET. THE LONGER DIMENSION OF EACH PANEL SHALL NOT EXCEED THE SHORTER DIMENSIONS BY MORE THAN 50%. JOINTS SHALL BE LOCATED AT COLUMN CENTERLINES WHERE POSSIBLE. CONTRACTOR SHALL SUBMIT JOINT LAYOUT TO ARCHITECT FOR APPROVAL. REFER TO TYP DETAIL RC-001A.

13. REINFORCEMENT SHALL BE CONTINUOUS AND LAPPED 53 BAR DIAMETERS (2' -6" MIN.) EXCEPT AS NOTED AND PROVIDE CORNER BARS OF SAME SIZE AND SPACING.

SPECIAL STRUCTURAL INSPECTION NOTES:

1. SPECIAL STRUCTURAL INSPECTIONS AND VERIFICATIONS SHALL BE PROVIDED BY THE OWNER OR OWNER'S REPRESENTATIVE MEETING THE REQUIREMENTS OF CHAPTER 17 OF THE CODE.
2. SPECIAL INSPECTORS SHALL BE QUALIFIED AND FURNISH THEIR REPORTS TIMELY TO THE BUILDING OFFICIAL, ARCHITECT AND/OR ENGINEER.

3. SPECIAL INSPECTIONS AS REQUIRED BY CODE:
   a. STEEL: SECTION 1704.3 AND TABLE 1704.3
   b. CONCRETE: SECTION 1704.4 AND TABLE 1704.4

SCHEDULE - SPREAD FOOTING

Type	LENGTH	WIDTH	THICK	REINF
F3.0	3' - 0"	3' - 0"	2' - 6"	(4) #6 EA WAY, TOP AND BOT
F6.0	6' - 0"	6' - 0"	2' - 6"	(5) #6 EA WAY, TOP AND BOT
F7.0	7' - 0"	7' - 0"	3' - 0"	(7) #6 EA WAY, TOP AND BOT

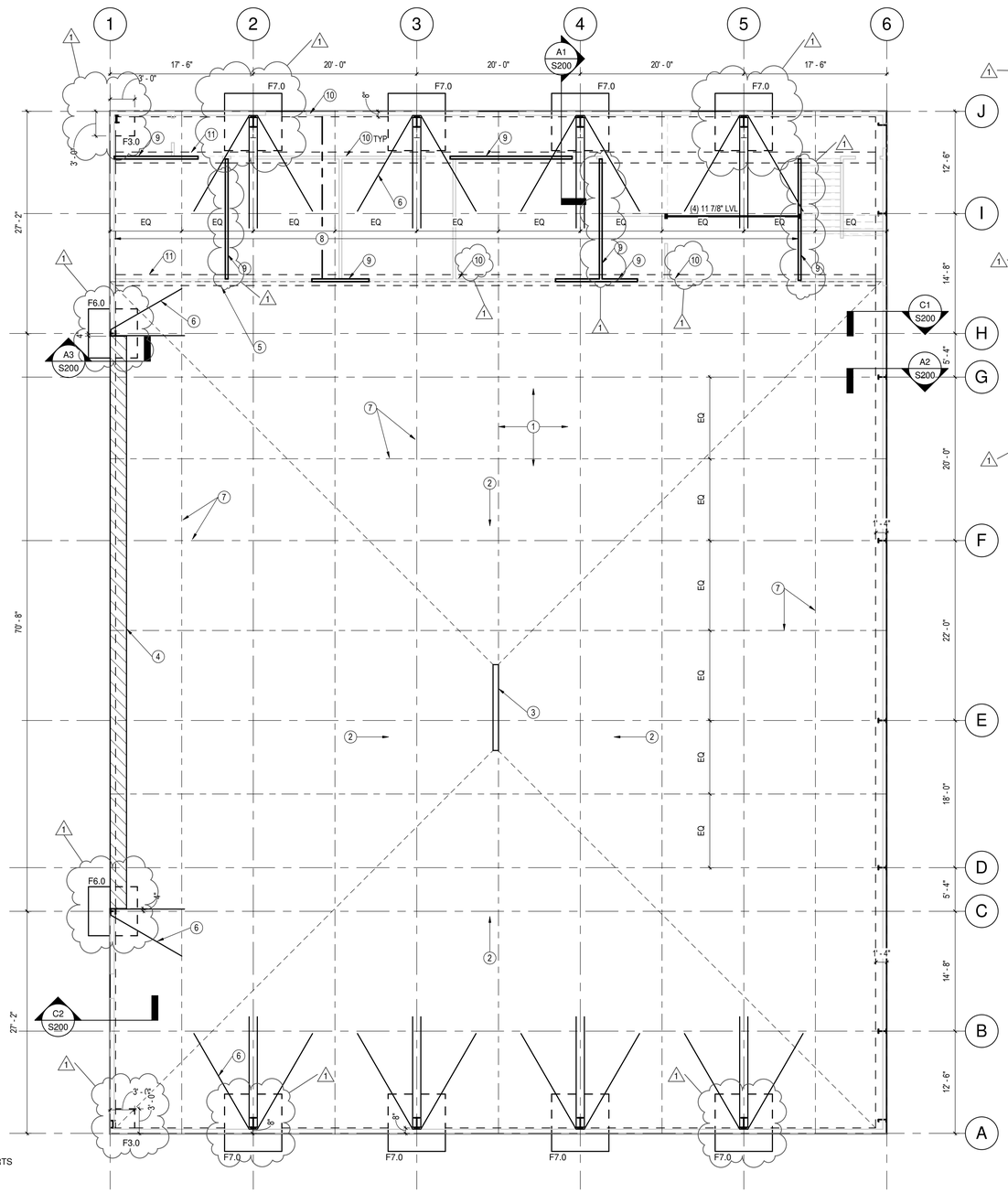

1 **FOUNDATION PLAN**
1/8" = 1'-0"

GENERAL SHEET NOTES

1. REFERENCE SHEET S200 FOR STRUCTURAL DETAILS

2. SEE ARCHITECTURAL DRAWING FOR DETAILS & DIMENSIONS NOT SHOWN.

3. FINISH FLOOR ELEVATION = 100'-0" UNO. THIS A REFERENCE ELEVATION AND IS GENERALLY 6" ABOVE GRADE

4. ALL EXTERIOR FOOTING SHALL BE 3'-0" MIN. BELOW GRADE. DEEPEN FOOTINGS AS REQUIRED.

5. SPREAD FOOTINGS ARE DENOTED "FX.X". REFER TO SCHEDULE ON THIS SHEET FOR SIZE AND REINFORCING.

6. REFER TO SCHEDULE ON THIS SHEET FOR ANCHOR ROD SCHEDULE. REFER TO DETAIL D1/S200 FOR ANCHOR ROD DETAIL

7. SEE S201 FOR WOOD FRAMING GENERAL NOTES AND HEADER SCHEDULE.

FOUNDATION PLAN NOTES:

1. 5" CONC SLAB OVER 3" OF CRUSHED GRAVEL. REINF W/ 6x6-W2.9Xw2.9 WWF IN UPPER 1/3 OF SLAB. PROVIDE VAPOR BARRIER BELOW SLAB PER THE GENERAL NOTES.
2. SLOPE SLAB TO DRAIN @ 1/8" PER FT MIN
3. SLOT DRAIN AS REQD.
4. RAMP UP AS REQD. ASSUME EXTERIOR PAVEMENT ELEVATION = 99'-6".
5. TRANSITION FROM FLAT SLAB TO SLOPING SLAB TO DRAIN. COORD WITH EXTENTS OF OFFICE SPACES
6. #6 HAIR-PIN SLAB REINF. RE: SECTIONS FOR ADDNL INFO AND D2/S200 FOR DIMENSIONS
7. SLAB CONTROL JOINTS AT ALL GRID LINES AND AT LOCATIONS DENOTED.
8. 11 7/8" I-JOISTS @ 16" O.C. (TJI 210 IS BASIS OF DESIGN). MAY SUBSTITUTE COLD FORMED STEEL JOISTS AT CONTRACTOR'S OPTION (CONTACT ENGINEER).
9. GYP BOARD SHEAR WALL. TYIPCAL FASTENING AND LAYOUT MAY BE USED.
10. 2X4 STUD (MIN) BEARING WALL. PLATE HEIGHT = 10'-0" OR LESS. SEE S201 FOR ADDITIONAL REQUIREMENTS. PROVIDE HEADERS OVER ALL DOORS AND OPENINGS PER TYPICAL DETAILS. MAY SUBSTITUTE COLD FORMED STEEL STUDS AT CONTRACTOR'S OPTION (CONTACT ENGINEER).
11. 16" WIDE BY 12" DEEP THICKENED SLAB BENEATH BEARING WALLS. REINFORCE W/(2) CONT #4 BARS BOT. CAST MONOLITHICALLY WITH SLAB ON GRADE AND RUN SLAB REINF CONT THROUGH THICKENED SLAB.

STAND
Structural
Engineering Inc
8234 Robinson St.
Overland Park, KS 66204
(913) 214-2169
www.stand-sei.com

STATE OF MISSOURI
PAUL WESLEY SPEARS
NUMBER PE-2009003624
PROFESSIONAL ENGINEER
6/26/2020

PROJECT INFORMATION:

AIRPLANE HANGER
2751 NE DOUGLAS RD
LEE'S SUMMIT, MO 64064

REVISIONS

DATE	#	DESCRIPTION
01/28/2020	1	REV 1
06/26/2020	2	REV 2

CLIENT:	BILL BARNARD
JOB NO. :	19492
DESIGN BY :	PWS
DRAWN BY :	PWS
DATE:	01/28/2020
SHEET NAME:	STRUCTURAL PLAN AND GENERAL NOTES
SHEET #:	S100

WOOD:

1. FRAMING MATERIAL:
A. NOMINAL STRUCTURAL LUMBER -- NO. 1 / NO.2 OR BETTER, S-DRY SPF, MIN Fb = 875 PSI, MIN E = 1400 KSI.
B. EXPOSED NOMINAL STRUCT LUMBER -- PRESS TREATED NO.2 OR BETTER, MIN Fb = 1000 PSI, MIN E = 1300 KSI
C. MICROLLAM LVL (LAMINATED VENEER LUMBER) BEAMS SHALL MEET TRUS JOIST SPECIFICATIONS: MINIMUM Fb = 2600 PSI AND MINIMUM E = 1900 KSI.
D. TIMBERSTRAND LSL (LAMINATED STRAND LUMBER) BEAMS SHALL MEET TRUS JOIST SPECIFICATIONS: MINIMUM Fb = 2600 PSI AND MINIMUM E = 1700 KSI.
E. GLULAM FRAMING: 24F-V4 DOUGLAS FIR, ARCHITECTURAL FINISH (COORDINATE WITH ARCH).

2. SUBSTITUTIONS OF SPECIFIED WOOD MEMBERS SHALL NOT BE MADE WITHOUT REVIEW OF THE ARCHITECT/ENGINEER.

3. WOOD SHEATHING:
A. ROOF SHEATHING SHALL BE 15/32" OR 1/2" APA RATED SHEATHING 40/20, EXPOSURE 1, MINIMUM 2 SPAN, FASTEN WITH 10d COMMON NAILS AT 6" CENTERS AT ALL PANEL EDGES AND 12" CENTERS MAXIMUM AT INTERMEDIATE FRAMING MEMBERS (IN THE FIELD). USE PLYCLIPS AT MIDSPAN.
B. WOOD FLOOR DECKING -- 3/4" APA RATED TOUNGE AND GROOVE SHEATHING, 48" SPAN RATING, EXPOSURE 1, MINIMUM 2 SPAN, FASTEN WITH APA APPROVED ADHESIVE AND 10d RING SHANKED NAILS AT 6" ON CENTERS AT ALL PANEL EDGES AND AT 10" ON CENTERS MAXIMUM AT INTERMEDIATE FRAMING MEMBERS (IN THE FIELD).
C. ALL EXTERIOR WOOD WALL SHEATHING EXCEPT WHERE NOTED SHALL BE APA RATED 7/16" SHEATHING. ALL PANEL EDGES SHALL BE BACKED WITH 2 INCH NOMINAL OR WIDER FRAMING. FASTEN WITH 8d COMMON NAILS AT 6" O.C. MAXIMUM AT ALL TOP PLATES, BLOCKING, BOUNDARIES AND 10" O.C. MAXIMUM IN THE FIELD.

4. ALL WOOD SHEATHING TO BE STAGGERED 4'X8' SHEETS. ORIENTED PERPENDICULAR TO SUPPORTING MEMBERS.

5. PROVIDE 1/8" GAP AT ALL SHEATHING PANEL EDGES AND END JOINTS UNLESS OTHERWISE SPECIFIED BY THE MANUFACTURER. DUE TO CONSTRUCTION CONDITIONS, TEMPORARY EXPANSION JOINTS MAY BE REQUIRED IN FLOOR/ROOF SHEATHING.

6. ALL HEADERS IN EXTERIOR OR INTERIOR BEARING WALLS SPANNING MORE THAN 3'-8" SHALL BE SUPPORTED ON DOUBLE STUDS UNLESS NOTED.

7. MINIMUM NAILING SHALL CONFORM TO IRC TABLE R602.3 (1). USE COMMON NAILS EXCEPT WHERE NOTED. ALL FASTENERS (BOLTS, SCREWS, NAILS, ETC) IN CONTACT WITH PRESSURE TREATED LUMBER SHALL BE HOT DIP GALVANIZED.

8. LIGHT GAGE WOOD FRAMING CONNECTORS AS NOTED ON THE PLANS FOR WOOD JOISTS, COLUMNS, BEAMS AND TRUSSES SHALL BE "STRONG – TIE" CONNECTORS BY THE SIMPSON CO. OR REVIEWED EQUIVALENT. CONNECTORS IN DIRECT CONTACT WITH PRESSURE TREATED LUMBER SHALL HAVE "ZMAX" G185 HOT DIP GALVANIZED COATING OR REVIEWED EQUIVALENT.

9. STAINLESS STEEL FASTENERS, ANCHOR BOLTS, LIGHT GAGE CONNECTORS, ETC. MAY BE SUBSTITUTED FOR HOT DIP GALVANIZED MATERIALS AT THE CONTRACTORS OPTION.

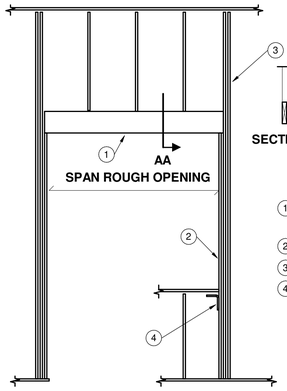

SECTION AA

WOOD HEADER SCHEDULE			
MARK	MEMBERS	MAX SPAN	JAMB MEMBERS
H206	(2) 2X6	4'-0"	2X4 - 1 KING, 1 TRIMMER
H208	(2) 2X8	5'-0"	2X4 - 1 KING, 1 TRIMMER
H210	(2) 2X10	6'-0"	2X4 - 2 KING, 1 TRIMMER
H212	(2) 2X12	7'-3"	2X4 - 2 KING, 2 TRIMMER
HLVL	(2) 1.75"X11.875" LVL	10'	2X4 - 3 KING, 2 TRIMMER

HEADER DETAIL NOTES:

1. WOOD HEADER PER SCHEDULE. ALL HEADERS SHALL BE GLUED AND NAILED TOGETHER AT 16" O.C. MAX. PROVIDE PLYWOOD FILLER AS REQUIRED TO MATCH STUD THICKNESS.
2. JAMB STUDS PER SCHEDULE
3. KING STUDS PER SCHEDULE
4. PROVIDE STUD UNDER SILL END OR SIMPSON A35 CLIP ANGLE.

1 WD-113 HEADER
1/2" = 1'-0"

1

Stand
Structural
Engineering Inc
12417 Connell Dr
Overland Park, KS
66213
(913)424-9115
www.stand-se.com

STATE OF MISSOURI
PAUL WESLEY SPEARS
NUMBER
PE-2009003624
PROFESSIONAL ENGINEER
01/28/2020

PROJECT INFORMATION:

AIRPLANE HANGER
2751 NE DOUGLAS RD
LEE'S SUMMIT, MO 64064

REVISIONS

DATE	⚠	DESCRIPTION
01/28/2020	1	REV 1

CLIENT:	BILL BARNARD
JOB NO. :	19492
DESIGN BY :	Designer
DRAWN BY :	Author
DATE:	01/28/2020
SHEET NAME:	WOOD FRAMING GENERAL NOTES AND DETAILS
SHEET #:	S201

DEVELOPMENT AND LAP SPLICE SCHEDULE															
	F'c = 3000 psi							F'c = 4000 psi							
	EMBEDMENT			LAP SPLICE				EMBEDMENT			LAP SPLICE				
	COMPR	TENSION (LTE)		COMPR	TENSION (LTS)		HOOK	COMPR	TENSION (LTE)		COMPR	TENSION (LTS)		HOOK
BAR	(LCE)	TOP	OTHER	(LCS)	TOP	OTHER	(LDH)	(LCE)	TOP	OTHER	(LCS)	TOP	OTHER	(LDH)
#3	8	21	16	12	28	21	6	8	18	14	12	24	18	6
#4	11	28	22	15	37	28	8	9	25	19	15	32	25	7
#5	14	36	27	19	46	36	10	12	31	24	19	40	31	8
#6	16	43	33	23	56	43	12	14	37	28	23	48	37	10
#7	19	62	48	26	81	62	13	17	54	42	26	70	54	12
#8	22	71	55	30	93	71	15	19	62	47	30	80	62	13
#9	25	80	62	34	105	80	17	21	70	54	34	91	70	15
#10	28	90	70	38	118	90	19	24	78	60	38	102	78	17
#11	31	100	77	42	131	100	22	27	87	67	42	113	87	19

NOTES (PERTAINING TO TABLE):
1. TOP BARS ARE HORIZONTAL BARS THAT HAVE MORE THAN 12" OF FRESH CONCRETE CAST BELOW THEM.
2. ALL BARS THAT ARE NOT "TOP BARS" ARE "OTHER" BARS
3. ABBREVIATIONS:
- LCE - COMPRESSION EMBEDMENT LENGTH
- LTE - TENSION EMBEDMENT LENGTH
- LCS - COMPRESSION LAP SPLICE LENGTH
- LTS - TENSION LAP SPLICE LENGTH
- LDH - HOOKED BAR TENSION EMBEDMENT LENGTH

NOTES (GENERAL):
1. STAGGER ALL SPLICES 12 db MIN, BUT NOT LESS THAN 12"
2. ALL DIMENSIONS INDICATED IN TABLE ARE IN INCHES
3. BARS GREATER THAN #11 SHALL BE MECHANICALLY SPLICED
4. ALL SPLICES SHALL BE WIRED IN CONTACT STACKED VERTICAL.

MULTIPLIERS:
ALL EMBEDMENT AND LAP SPLICE LENGTHS SHALL BE INCREASED AS REQD BY THE MULIPLIERS BELOW. APPLY MULTIPLE MULTIPLIERS IF APPLICABLE.
1.3 -- IF CONC CONTAINS LIGHT WEIGHT AGGREGATES
1.3 -- IF EPOXY COATED REBAR USED

D5 RC-004 SPLICE & DEVELOPMENT SCHEDULE
3/4" = 1'-0"

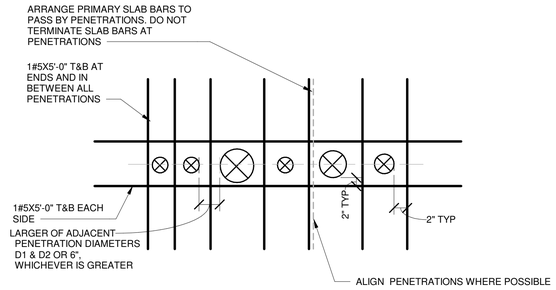

NOTE:
DETAIL DOES NOT APPLY FOR PENETRATIONS LARGER THAN 12" IN DIAMETER. SEE TYP SLAB OPENING DETAIL FOR SUCH PENETRATIONS.

D3 TYP ALIGNED CIP SLAB PENETRATIONS
3/4" = 1'-0"

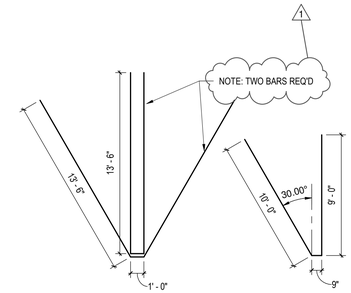

D2 HAIRPIN DIMS
3/16" = 1'-0"

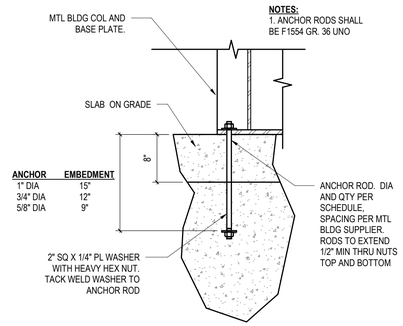

NOTES:
1. ANCHOR RODS SHALL BE F1554 GR. 36 UNO

D1 ST-001a - TYP ANCHOR ROD
1" = 1'-0"

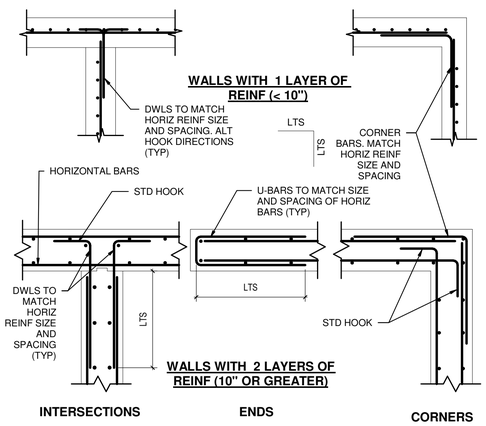

C4 RC-003 CONC WALL CORNERS
1/2" = 1'-0"

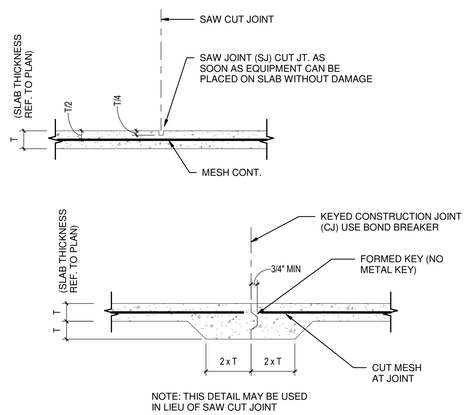

NOTE: THIS DETAIL MAY BE USED IN LIEU OF SAW CUT JOINT

C3 RC-001A - TYP SOG CONTROL JOINTS
3/4" = 1'-0"

DETAIL NOTES:
1. METAL WALL PANEL PER METAL BUILDING SUPPLIER
2. L3x2x1/4 CONT (LLH). ANCHOR TO CONC FLOOR W/ 3/8" DIA SCREW ANCHORS X 2" MIN EMBED @ 24" OC MAX.
3. SLAB ON GRADE. RE: PLAN
4. #4 DOWELS (2'-0" X 2'-0") @ 18" OC AROUND PERIMETER OF SLAB. PROVIDE #4 CONT AT EDGE.
5. #4 VERTS @ 18" OC
6. (3) #4 CONT

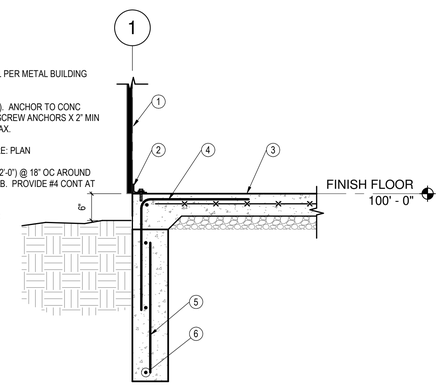

C2 FOUNDATION SECTION
3/4" = 1'-0"

DETAIL NOTES:
1. METAL WALL PANEL PER METAL BUILDING SUPPLIER.
2. L3x2x1/4 CONT (LLH). ANCHOR TO CONC FLOOR W/ 3/8" DIA SCREW ANCHORS X 2" MIN EMBED @ 24" OC MAX.
3. SLAB ON GRADE. RE: PLAN
4. #4 DOWELS (2'-0" X 2'-0") @ 18" OC AROUND PERIMETER OF SLAB. PROVIDE #4 CONT AT EDGE.
5. (2) #4 CONT TOP AND BOT.
6. #4 C SHAPED TIES @ 18" OC

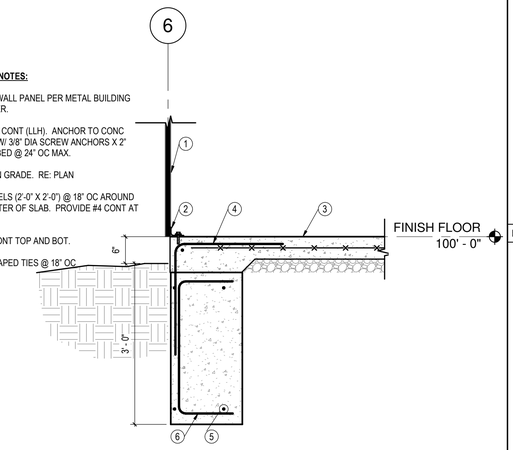

C1 FOUNDATION SECTION
3/4" = 1'-0"

DETAIL NOTES:
1. METAL BUILDING COL @ DOOR OPENING PER MB SUPPLIER
2. ANCHOR RODS. REFER TO METAL BUILDING DRAWINGS FOR LOCATIONS AND PLAN FOR
3. SLAB ON GRADE. RE: PLAN
4. RAMP CONCRETE AS REQD AT DOORWAY.
5. EXISTING EXTERIOR PAVING. REPAIR AS NECESSARY DUE TO CONSTRUCTION.
6. SPREAD FOOTING. RE: PLAN FOR SIZE AND REINF
7. #4 DOWELS (2'-0" X 2'-0") @ 18" OC AROUND PERIMETER OF SLAB. PROVIDE #4 CONT AT EDGE.
8. #4 DWLS X 3'-0" LONG @ 18" OC IN DOORWAY.
9. METAL WALL PANEL PER METAL BUILDING SUPPLIER
10. RECESS TOP OF FOOTING 6" MAX AS NEEDED FOR CLEARANCE.

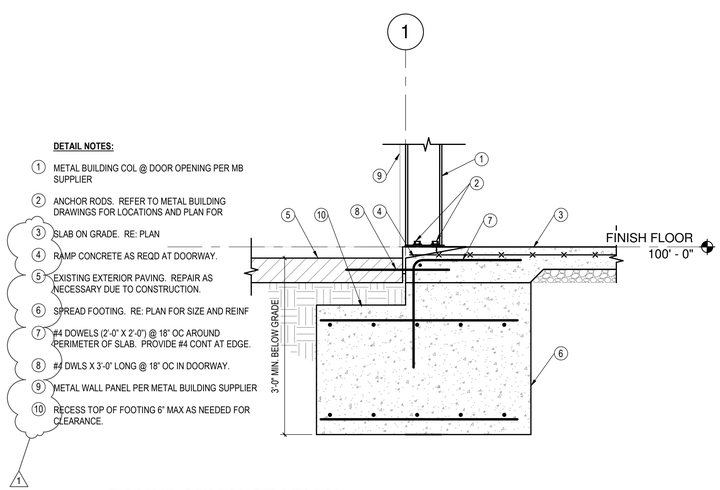

A3 FOUNDATION SECTION
3/4" = 1'-0"

DETAIL NOTES:
1. METAL BUILDING COLUMN PER METAL BUILDING SUPPLIER
2. ANCHOR RODS. REFER TO METAL BUILDING DRAWINGS FOR LOCATIONS.
3. SLAB ON GRADE. RE: PLAN
4. GRADE.
5. (2) #4 CONT TOP AND BOT.
6. #4 C SHAPED TIES @ 18" OC
7. #4 DOWELS (2'-0" X 2'-0") @ 18" OC AROUND PERIMETER OF SLAB. PROVIDE #4 CONT AT EDGE.
8. L3x2x1/4 CONT (LLH). ANCHOR TO CONC FLOOR W/ 3/8" DIA SCREW ANCHORS X 2" MIN EMBED @ 24" OC MAX. ANGLE AT PERIMETER FOR BOTTOM OF WALL ATTACHMENT NOT SHOWN FOR CLARITY. RE: OTHER DETAILS FOR REQUIREMENTS.
9. METAL WALL PANEL PER METAL BUILDING SUPPLIER.

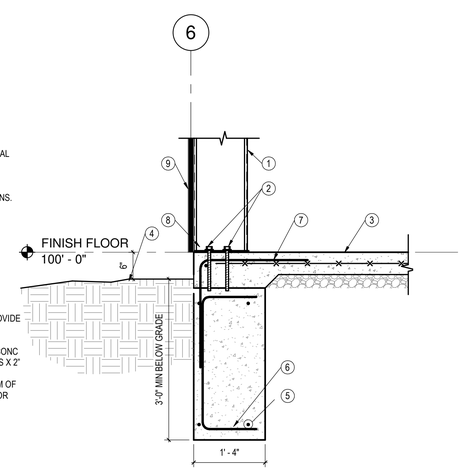

A2 FOUNDATION SECTION
3/4" = 1'-0"

DETAIL NOTES:
1. RIGID FRAME COL PER METAL BUILDING SUPPLIER
2. ANCHOR RODS. REFER TO METAL BUILDING DRAWINGS FOR LOCATIONS.
3. SLAB ON GRADE. RE: PLAN
4. HAIR PIN REINF. RE: PLAN FOR LOCATIONS AND DIMENSIONS.
5. HAIRPIN TO BE LOCATED 1" MAX FROM TOP OF CONCRETE AT ANCHOR RODS. IT MAY SLOPE DOWN INTO SLAB AWAY FROM ANCHOR RODS.
6. SPREAD FOOTING. RE: PLAN FOR SIZE AND REINF
7. #4 DOWELS (2'-0" X 2'-0") @ 18" OC AROUND PERIMETER OF SLAB. PROVIDE #4 CONT AT EDGE.
8. L3x2x1/4 CONT (LLH). ANCHOR TO CONC FLOOR W/ 3/8" DIA SCREW ANCHORS X 2" MIN EMBED @ 24" OC MAX.
9. METAL WALL PANEL PER METAL BUILDING SUPPLIER
10. RECESS TOP OF FOOTING 6" MAX BELOW GRADE.
11. FOOTING F7.0 SHALL BE 36" THICK

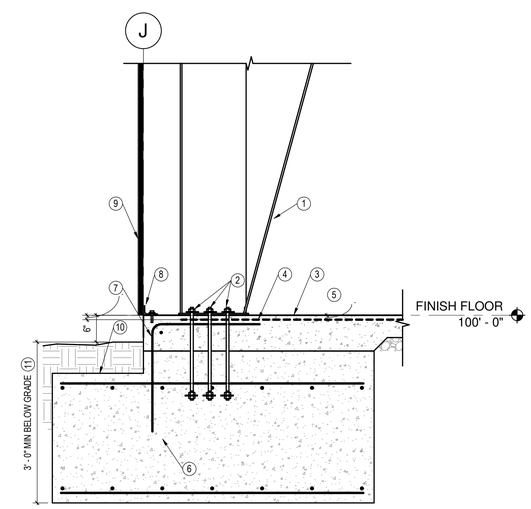

A1 FOUNDATION SECTION
3/4" = 1'-0"

Stand Structural Engineering Inc
12417 Connell Dr
Overland Park, KS
66213
(913)424-9115
www.stand-se.com

STATE OF MISSOURI
PAUL WESLEY SPEARS
NUMBER PE-2009003624
PROFESSIONAL ENGINEER
01/28/2020

PROJECT INFORMATION:

AIRPLANE HANGER
2751 NE DOUGLAS RD
LEE'S SUMMIT, MO 64064

REVISIONS

DATE	△	DESCRIPTION
01/28/2020	1	REV 1

CLIENT:	BILL BARNARD
JOB NO. :	19492
DESIGN BY :	EJS
DRAWN BY :	EJS
DATE:	01/28/2020
SHEET NAME:	STRUCTURAL DETAILS
SHEET #:	S200

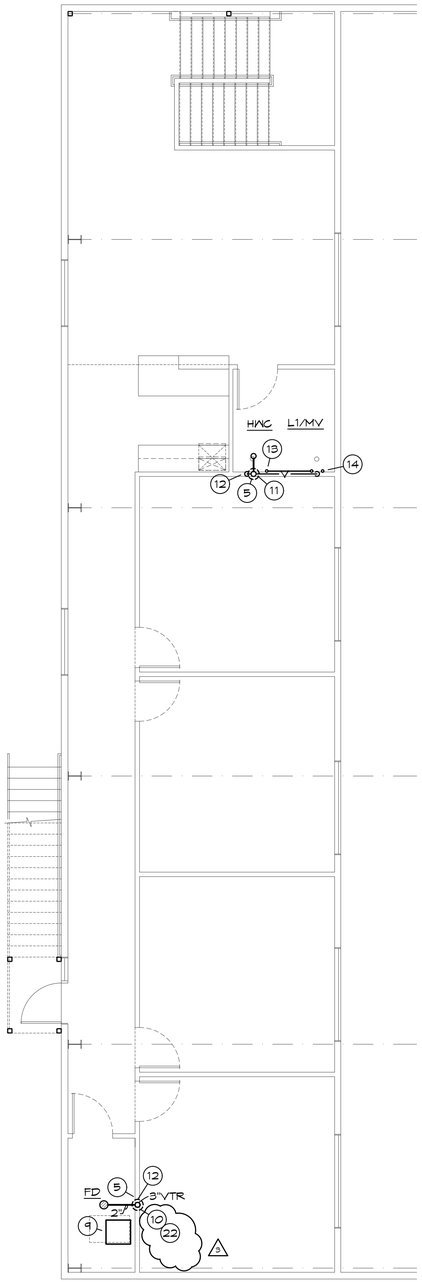

UPPER FLOOR PLUMBING PLAN

SCALE: 3/16" = 1'-0"

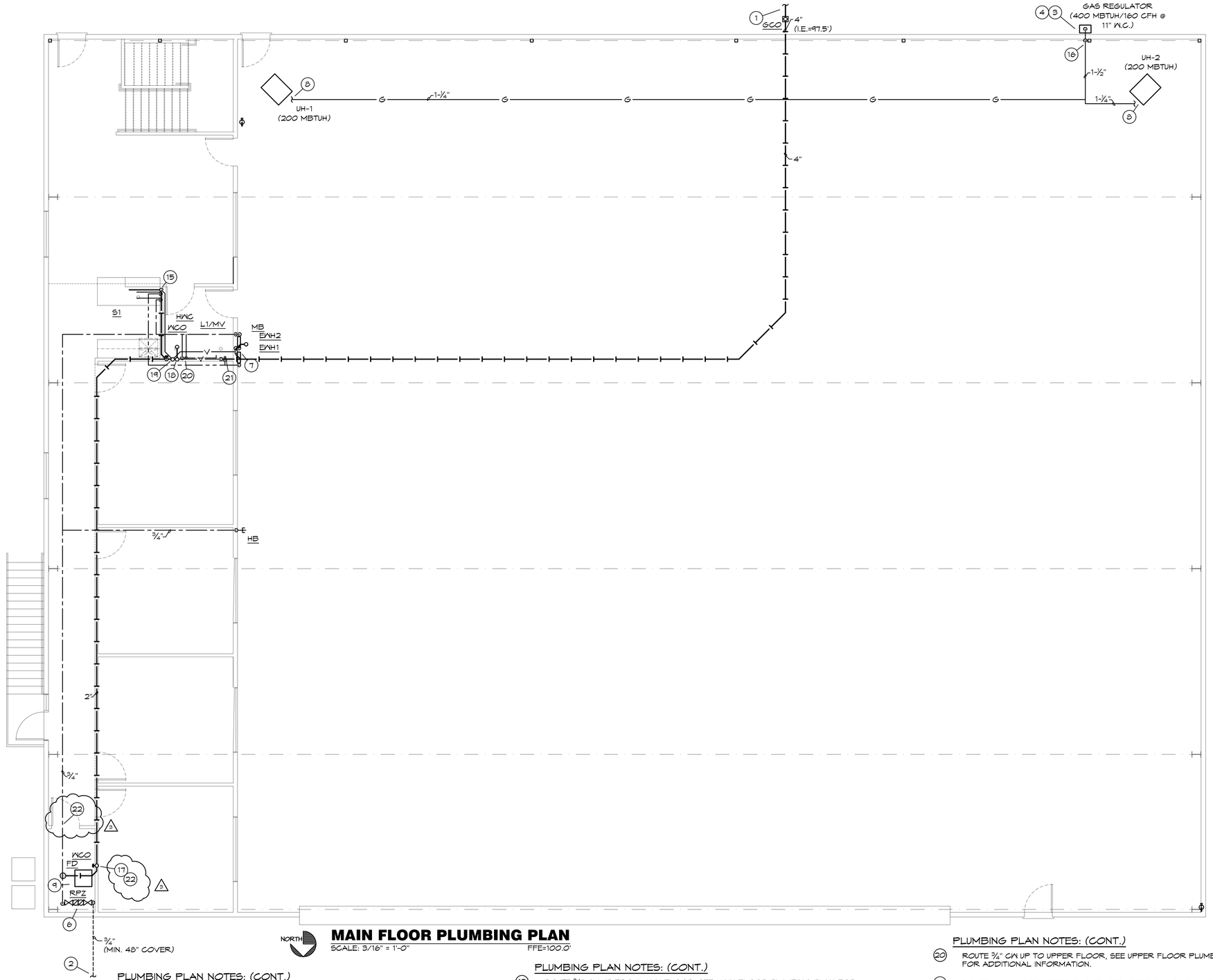

MAIN FLOOR PLUMBING PLAN

SCALE: 3/16" = 1'-0" FFE=100.0'

PLUMBING PLAN NOTES:

1. EXTEND AND CONNECT 4" WASTE TO SEPTIC TANK AND FIELD AS REQUIRED, COORDINATE WITH GC FOR EXACT LOCATION.
2. EXTEND AND CONNECT ¾" CW TO EXISTING WATER MAIN AS REQUIRED. VERIFY EXACT LOCATION PRIOR TO INSTALLATION OF ANY PIPING. MAINTAIN MINIMUM 48" COVER
3. COORDINATE PROPANE GAS REGULATOR FOR TOTAL CAPACITY OF 400 MBTUH (160 CFH) AT 11" W.C.
4. COORDINATE LOCATION AND SIZE OF PROPANE TANK WITH CIVIL/OWNER/ARCH. CODE DICTATES THAT LARGEST ALLOWABLE SIZE OF TANK IS TO BE 2,000 GALLONS WITH A 25' CLEARANCE FROM "ALL BUILDINGS, PUBLIC WAYS, OR LOT LINES OF ADJOINING PROPERTY THAT CAN BE BUILT UPON". IF THE TANK SIZE IS REDUCED TO 1,200 GALLONS, THAT CLEARANCE REQUIREMENT DROPS TO 10'.
5. LOCATION OF 3" VTR. VERIFY 10' CLEARANCE FROM ALL OUTDOOR AIR INTAKES. SEAL PENETRATION WEATHERTIGHT.

PLUMBING PLAN NOTES: (CONT.)

6. ROUTE ¾" CW UP FROM BELOW FLOOR AND CONNECT TO RPZ AS REQUIRED. ROUTE DRAIN FROM RPZ TO FLOOR DRAIN AND DISCHARGE WITH AIR GAP AS REQUIRED.
7. SECURE (2) TANKLESS WATER HEATERS ON WALL ABOVE MOP BASIN AS PER MANUFACTURER RECOMMENDATIONS, CONNECT CW AND HW PIPING AS REQUIRED BY MANUFACTURER. REFER TO RISER DIAGRAM FOR ADDITIONAL INFORMATION.
8. CONNECT GAS TO EQUIPMENT AS REQUIRED AND AS DETAILED.
9. ROUTE CONDENSATE FROM AIR HANDLER TO FLOOR DRAIN AND DISCHARGE WITH AIR GAP AS REQUIRED.
10. ROUTE 2" WASTE DOWN. SEE MAIN FLOOR PLUMBING PLAN FOR ADDITIONAL INFORMATION.
11. ROUTE 3" WASTE DOWN. SEE MAIN FLOOR PLUMBING PLAN FOR ADDITIONAL INFORMATION.
12. 2" VENT UP FROM MAIN FLOOR, SEE MAIN FLOOR PLUMBING PLAN FOR ADDITIONAL INFORMATION.

PLUMBING PLAN NOTES: (CONT.)

13. ROUTE ¾" CW UP FROM MAIN FLOOR, SEE MAIN FLOOR PLUMBING PLAN FOR ADDITIONAL INFORMATION.
14. ROUTE ½" HW UP FROM MAIN FLOOR, SEE MAIN FLOOR PLUMBING PLAN FOR ADDITIONAL INFORMATION.
15. ROTUE ½" CW, ½" HW, 1-½" WASTE AND 1-½" VENT IN WALL TO BELOW CASEWORK, EXTEND AND CONNECT TO SINK AS REQUIRED.
16. ROUTE PIPING IN WALL. ALL CONCEALED JOINTS TO BE WELDED, OR APPROVED FOR CONCEALED INSTALLATION.
17. 2" WASTE FROM FLOOR ABOVE, SEE UPPER FLOOR PLUMBING PLAN FOR ADDITIONAL INFORMATION.
18. 3" WASTE FROM ABOVE, PROVIDE CLEANOUT AT BASE OF RISER. SEE UPPER FLOOR PLUMBING PLAN FOR ADDITIONAL INFORMATION.
19. ROUTE 2" VENT UP TO FLOOR ABOVE, SEE UPPER FLOOR PLUMBING PLAN FOR ADDITIONAL INFORMATION.

PLUMBING PLAN NOTES: (CONT.)

20. ROUTE ¾" CW UP TO UPPER FLOOR, SEE UPPER FLOOR PLUMBING PLAN FOR ADDITIONAL INFORMATION.
21. ROUTE ½" HW UP TO UPPER FLOOR, SEE UPPER FLOOR PLUMBING PLAN FOR ADDITIONAL INFORMATION.
22. FIRE CAULK WALL PENETRATION WITH LISTED APPROVED ASSEMBLY TO MEET UL REQUIREMENTS OF CONSTRUCTION ASSEMBLY.

BC PROJECT #: 20388
MISSOURI PE COA #2009003629

This drawing has been prepared by the Engineer, or under his supervision. This drawing is provided as an instrument of service by the Designer/Engineer and is intended for use on this project only. Pursuant to the Architectural Works Copyright Protection Act of 1990, all drawings, specifications, ideas and designs, including the overall form, arrangement and composition of spaces and elements appearing herein, constitute the original, copyrighted work of the Designer/Engineer. Any reproduction, use, or disclosure of information contained herein without prior written consent of the Engineer is strictly prohibited. © 2020 BC Engineers, Inc.

BC ENGINEERS INCORPORATED
5720 Reeder Shawnee, Ks. 66203 (913)262-1772

7/7/2020
STATE OF MISSOURI
ERIK B. KNUDSEN
NUMBER
PE-2004026504
REGISTERED PROFESSIONAL ENGINEER

Signature BUILDERS KC, LLC

Signature Builders KC, LLC
2751 NE Douglas St. - Suite R
Lee's Summit, Missouri 64064
Phone: (816) 215-0891

Website:
www.sb-kc.net

New Airplane Hangar

CAD Construction Documents
Voice / Text : 913.638.3241
mgspencer@sbcglobal.net

Residential AutoCAD Drafting and Design Services

No.	Description	Date
1	City Comments	6/18/20

CONSTRUCTION DOCUMENTS

Project Number	2019.03
Date	2020 MAY 14
Drawn By	SP/BH
Checked By	EK/DS

P-101

Scale 3/16" = 1'-0"

PLUMBING GENERAL NOTES:

1. INSTALL ALL PIPE, ETC. AS HIGH AS POSSIBLE.
2. COORDINATE ALL WORK WITH OTHER TRADES AND EXISTING CONDITIONS AS REQUIRED TO PROPERLY INSTALL ALL SYSTEMS AS INTENDED, WITHIN THE CONFINES OF THE SPACES AVAILABLE, AND WITHOUT INTERFERENCES.
3. REFER TO ARCHITECTURAL DRAWINGS FOR EXACT LOCATIONS AND MOUNTING HEIGHTS OF FIXTURES.
4. REFER TO ARCHITECTURAL & STRUCTURAL DRAWINGS FOR REQUIREMENTS FOR SUPPORTING PIPING, EQUIPMENT, ETC. FROM THE STRUCTURE. PROVIDE ADDITIONAL STEEL AS REQUIRED TO PROPERLY SUPPORT SYSTEMS FROM THE STRUCTURE.
5. NO PIPING SHALL BE ROUTED OVER THE TOP OF ELECTRICAL PANELS.
6. CONTRACTOR TO TEST WATER PRESSURE ON SITE AND PROVIDE PRESSURE REDUCING VALVE ON WATER SERVICE IF PRESSURE IS OVER 80 PSI.

PLUMBING SYMBOLS

- SOIL AND WASTE PIPING BELOW FLOOR/GRADE
- SOIL AND WASTE PIPING ABOVE FLOOR/GRADE
- SANITARY VENT PIPING ABOVE GRADE
- SANITARY VENT PIPING BELOW GRADE
- DOMESTIC COLD WATER PIPING
- DOMESTIC HOT WATER PIPING
- DOMESTIC HOT WATER RECIRCULATION PIPING
- G — PROPANE GAS PIPING
- D — EQUIPMENT DRAIN LINE
- PIPING TURNING DOWN
- PIPING TURNING UP
- TEE TOP CONNECTION
- UNION
- BACKFLOW PREVENTER
- FD — FLOOR DRAIN
- FCO — FLOOR CLEAN OUT
- WCO — WALL CLEAN OUT
- GCO — GRADE CLEAN OUT
- VALVE
- BALANCING VALVE
- SOLENOID VALVE
- PRESSURE REGULATOR
- CHECK VALVE
- CONNECT TO EXISTING
- I.E. — INVERT ELEVATION OF PIPE
- A — MATCH MARKS ON PLUMBING RISER DIAGRAM

PLUMBING FIXTURE BRANCH PIPING SCHEDULE

FIXTURE	WASTE	VENT	CW	HW
WATER CLOSET (TANK TYPE)	3"	2"	1/2"	- -
LAVATORY	1-1/4"	1-1/4"	1/2"	1/2"
SINK	1-1/2"	1-1/2"	1/2"	1/2"
FLOOR DRAIN	2"	2"	- -	- -
MOP BASIN	2"	2"	1/2"	1/2"

NOTE: INDIVIDUAL VENTS FOR FIXTURES ON PLANS AND RISER DIAGRAMS HAVE BEEN INCREASED WHERE HORIZONTAL VENT LENGTH IS IN EXCESS OF THE MAXIMUM DISTANCE INDICATED BY THE CODE.

PEX PIPING REQUIREMENTS

PIPE SIZES GIVEN ON THE DRAWINGS ARE NOMINAL COPPER PIPE SIZE. IF PEX PIPING IS USED, INCREASE PEX PIPING ONE SIZE ABOVE LISTED SIZES AS REQUIRED TO EQUAL OR EXCEED COPPER PIPE INSIDE DIAMETER.

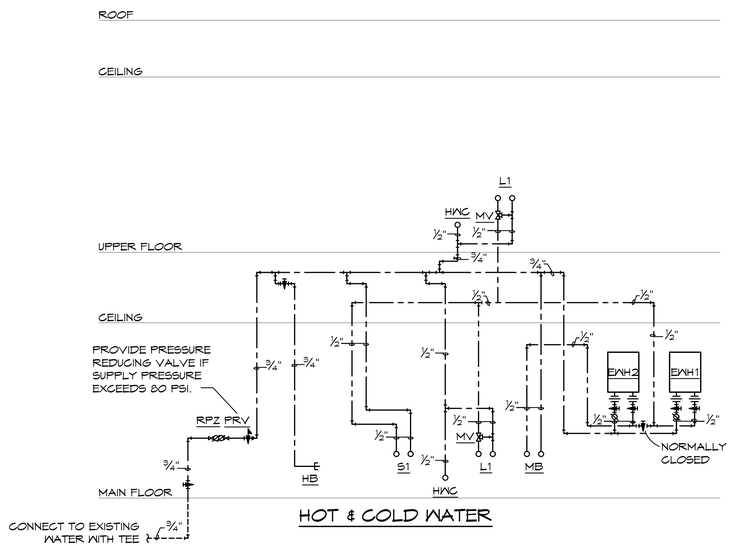

HOT & COLD WATER

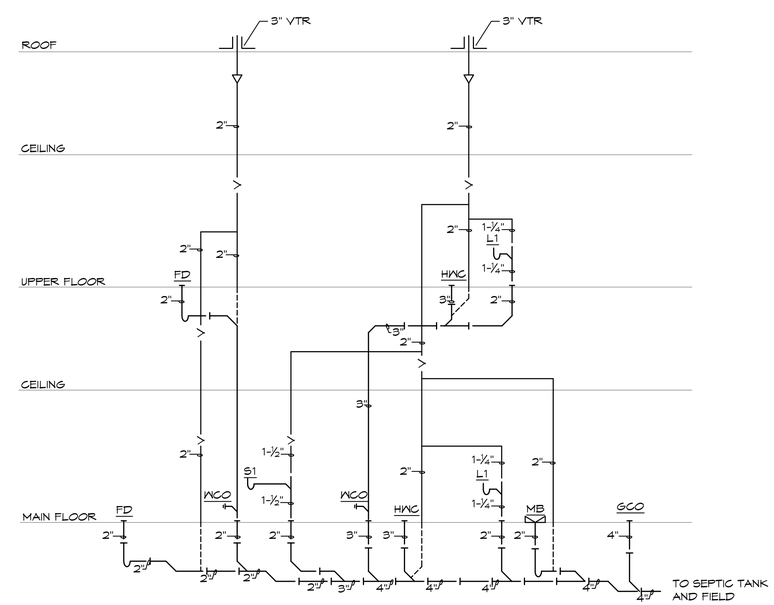

WASTE & VENT

PLUMBING RISER DIAGRAMS

SCALE: NONE

PLUMBING FIXTURE SCHEDULE: (OR EQUAL)

- HWC — HANDICAP WATER CLOSET: AMERICAN STANDARD, 1.6 GALLON FLUSH, 16-1/2" HIGH ELONGATED BOWL, FLOOR MOUNTED, FLOOR OUTLET, TANK TYPE, VITREOUS CHINA, SIPHON-JET ACTION, OPEN FRONT SEAT WITH CHECK HINGE AND LESS COVER, CHROME PLATED ANGLE STOP AND RISER. HANDLE ON WIDE SIDE OF FIXTURE.
- L1 — HANDICAP LAVATORY, WALL HUNG: AMERICAN STANDARD, 20"X 18", VITREOUS CHINA, FRONT OVERFLOW, FAUCET WITH SINGLE METAL LEVER HANDLE, 0.5 GPM AERATOR, OFFSET GRID ELBOW DRAIN AND 1-1/4" TAILPIECE, CHROME PLATED CAST BRASS P-TRAP WITH CLEANOUT (MOUNTED PARALLEL WITH WALL), CHROME PLATED ANGLE STOPS AND RISERS, INSULATE EXPOSED DRAIN, WATER SUPPLIES, AND VALVES WITH PROWRAP SEAMLESS MOLDED CLOSED CELL VINYL INSULATION.
- S1 — SINK:ELKAY, #LRAD-2222, 19"x16"x 6-1/2" DEEP BOWL,21-3/8"x 21-3/8" CUT-OUT, ADA COMPLIANT, SINGLE COMPARTMENT, SELF-RIMMING STAINLESS STEEL SINK WITH SATIN FINISH AND SOUND DAMPENING UNDERCOATING, #LK-1000CR FAUCET, SWING SPOUT, 1.0 GPM AERATOR, SINGLE LEVER HANDLE, CHROME PLATED CAST BRASS P-TRAP WITH CLEANOUT, CHROME PLATED ANGLE STOPS AND RISERS, IN-SINK-ERATOR #BADGER 5 DISPOSAL, 1/2 HP, 120 VOLT.
- MB — MOP BASIN: FIAT, #MSB-2424, MOLDED STONE MOP BASIN, 2" DRAIN, 24"x 24" BASIN, VINYL BUMPER GUARD, STERN WILLIAMS #T-10-VB FAUCET, SPRING CHECKS, VACUUM BREAKER, INTEGRAL STOPS, WALL BRACE & PAIL HOOK, WALL BRACKET WITH 30" HOSE.
- HB — HOSE BIBB: WOODFORD, #24, 3/4" HOSE NOZZLE OUTLET, BRASS FINISH, HANDWHEEL OPERATED, INTEGRAL VACUUM BREAKER.
- FD — FLOOR DRAIN: JR SMITH, #2005-A, CAST IRON FLOOR DRAIN WITH ADJUSTABLE TOP, 6" NIKALOY STRAINER. PROVIDE WITH #2692 QUAD CLOSE TRAP SEAL DEVICE.
- EWH1 — ELECTRIC TANKLESS HOT WATER HEATER: EEMAX #HA018240, 240 VOLT, 18.0 KW.
- EWH2 — ELECTRIC TANKLESS HOT WATER HEATER: EEMAX #HA018240, 240 VOLT, 18.0 KW.
- MV — MIXING VALVE: WATTS, #LFUSG-B, THERMOSTATIC CONTROLLED MIXING VALVE, LEAD FREE BRONZE BODY, LOCKED TEMPERATURE ADJUSTMENT CAP (VANDAL RESISTANT), COPPER ENCAPSULATED THERMOSTAT ASSEMBLY WITH BRASS SHUTTLE, STAINLESSSTEEL SPRINGS, INTEGRAL CHECK VALVES ON HOT AND COLD INLETS. (SET TO 110°F). ASSE 1070 LISTED.
- RPZ — REDUCED ZONE PRESSURE BACKFLOW PREVENTOR: WATTS #LF009, LEAD FREE BRONZE BODY CONSTRUCTION, TWO, IN-LINE INDEPENDENT CHECK VALVES, REPLACEABLE CHECK SEATS WITH AN INTERMEDIATE RELIEF VALVE, AND BALL VALVE TEST COCKS.
- FCO/WCO — VINYL TILE FLOOR: JR SMITH #4140, OR EQUAL.
  QUARRY TILE FLOOR: JR SMITH #4200, OR EQUAL.
  CARPETED FLOOR: JR SMITH #4020-Y, OR EQUAL.
  UNFINISHED FLOOR: JR SMITH #4020, OR EQUAL.
  WALL: JR SMITH #4472, OR EQUAL, 24" ABOVE THE FLOOR.

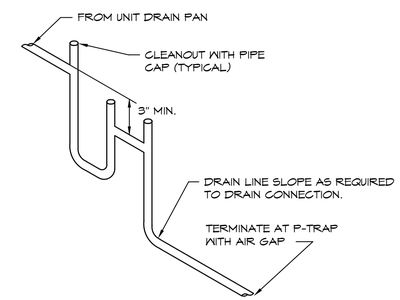

CONDENSATE DRAIN DETAIL

SCALE: NONE

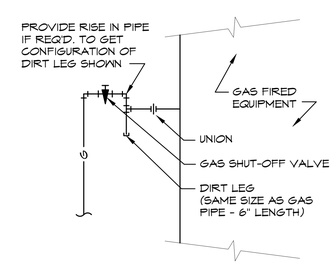

GAS CONNECTION DETAIL

SCALE: NONE

BC PROJECT #: 20388
MISSOURI PE COA #2009003629

This drawing has been prepared by the Engineer, or under his supervision. This drawing is provided as an instrument of service by the Designer/Engineer and is intended for use on this project only. Pursuant to the Architectural Works Copyright Protection Act of 1990, all drawings, specifications, ideas and designs, including the overall form, arrangement and composition of spaces and elements appearing herein, constitute the original, copyrighted work of the Designer/Engineer. Any reproduction, use, or disclosure of information contained herein without prior written consent of the Engineer is strictly prohibited. © 2020 BC Engineers, Inc.

BC ENGINEERS INCORPORATED
5720 Reeder Shawnee, Ks. 66203 (913)262-1772

6/18/2020
REGISTERED PROFESSIONAL ENGINEER — STATE OF MISSOURI
ERIK B. KNUDSEN
NUMBER PE-2004026504

Signature BUILDERS KC, LLC

Signature Builders KC, LLC
2751 NE Douglas St. - Suite R
Lee's Summit, Missouri 64064
Phone: (816) 215-0891

Website:
www.sb-kc.net

New Airplane Hangar

CAD Construction Documents
Voice / Text : 913.638.3241
mgspencer@sbcglobal.net

Residential AutoCAD Drafting and Design Services

No.	Description	Date
1	City Comments	6/18/20

CONSTRUCTION DOCUMENTS

Project Number	2019.03
Date	2020 MAY 14
Drawn By	SP/BH
Checked By	EK/DS

P-201

Scale 3/16" = 1'-0"

MECHANICAL SPECIFICATIONS

1. GENERAL PROVISIONS:

   A. PROVIDE ALL LABOR, MATERIALS, EQUIPMENT, NECESSARY FOR THE COMPLETE INSTALLATION OF THE PLUMBING AND MECHANICAL SYSTEMS OUTLINED.

   B. OBTAIN ALL PERMITS, FEES, LICENSES, INSPECTIONS, AND CERTIFICATES OF COMPLIANCE OR APPROVAL AS REQUIRED BY THE AUTHORITIES.

   C. ALL WORK SHALL BE PERFORMED IN ACCORDANCE WITH ALL APPLICABLE LAWS, CODES AND REGULATIONS OF THE GOVERNMENTAL BODIES HAVING JURISDICTION OVER THE SITE.

   D. ALL TESTING REQUIRED BY AUTHORITIES SHALL BE CONSIDERED PART OF THIS WORK.

   E. DURING CONSTRUCTION, ALL FIXTURES, EQUIPMENT, PIPE, DUCT, ETC. SHALL BE COVERED, PLUGGED, OR CAPPED AS REQUIRED TO KEEP CLEAN AND UNDAMAGED. ALL DAMAGED ITEMS SHALL BE RESTORED TO ORIGINAL CONDITION OR REPLACED. ALL PROTECTIVE COVERING SHALL BE REMOVED BEFORE FINAL ACCEPTANCE.

   F. PROVIDE ALL NECESSARY CUTTING AND PATCHING OF WALLS, FLOORS, CEILINGS, AND ROOFS AS NECESSARY. PATCH AROUND ALL OPENINGS SHALL MATCH ADJACENT AREA. COORDINATE ALL ROOFING WORK WITH OWNER OR RESPONSIBLE PARTY, SO THAT THE EXISTING ROOFING WARRANTY WILL BE MAINTAINED.

   G. CONTRACTOR SHALL GUARANTEE ALL WORK AND MATERIALS AGAINST DEFECTS FOR A PERIOD OF ONE YEAR FROM FINAL ACCEPTANCE.

2. OPERATION AND MAINTENANCE MANUALS:

   A. DURING THE COURSE OF CONSTRUCTION, COLLECT AND COMPILE OPERATING INSTRUCTIONS, WIRING DIAGRAMS, CATALOG CUTS, LUBRICATION AND PREVENTIVE MAINTENANCE INSTRUCTIONS, PARTS LISTS, ETC. FOR ALL EQUIPMENT FURNISHED UNDER THIS CONTRACT.

   B. ALL LITERATURE AND INSTRUCTIONS SHIPPED WITH THE EQUIPMENT SHALL BE SAVED FOR INCLUSION IN THE OPERATION AND MAINTENANCE MANUALS.

   C. ALL LITERATURE LISTED ABOVE AND ALL PAPERS LISTING WARRANTIES, ETC. SHALL BE BOUND IN A 3-RING BINDER AND LABELED WITH THE PROJECT NAME, ADDRESS, ARCHITECT, ENGINEER, CONTRACTORS, ETC.

3. MANUFACTURERS:

   A. MANUFACTURERS, MODEL NUMBERS, ETC. INDICATED OR SCHEDULED ON THE DRAWINGS SHALL BE INTERPRETED AS HAVING ESTABLISHED A STANDARD OF QUALITY AND SHALL NOT BE CONSTRUED AS LIMITING COMPETITION. ARTICLES, FIXTURES, ETC. OF EQUAL QUALITY BY MANUFACTURERS SHALL BE ACCEPTABLE, SUBJECT TO STRUCTURAL AND ELECTRICAL CONSTRAINTS OF THE PROJECT DESIGN, UNLESS NOTED OTHERWISE.

4. MOTORS:

   A. PROVIDE THERMAL OVERLOAD PROTECTION FOR EACH MOTOR PROVIDED BY THIS WORK.

5. TESTING, BALANCING, AND CLEANING:

   A. ALL PIPING SHALL BE TESTED FOR LEAKS BEFORE BEING CONCEALED IN WALL CONSTRUCTION OR COVERED WITH INSULATION.

   B. SEWER AND VENT PIPING SHALL BE HYDROSTATICALLY TESTED WITH NO LESS THAN 10 FEET OF HEAD FOR A PERIOD OF NOT LESS THAN 15 MINUTES, PER THE LOCAL PLUMBING CODE, WITH NO LEAKS.

   C. DOMESTIC WATER PIPING SHALL BE HYDROSTATICALLY TESTED AT A PRESSURE OF NOT LESS THAN 1-1/2 TIMES THE OPERATING PRESSURE, BUT NOT LESS THAN 60 PSI, FOR A PERIOD OF NOT LESS THAN 2 HOURS, WITH NO LEAKS.

   D. PROPANE GAS PIPING SHALL BE PNEUMATICALLY TESTED AT A PRESSURE OF NOT LESS THAN 1-1/2 TIMES THE OPERATING PRESSURE, BUT NOT LESS THAN 50 PSI, FOR A PERIOD OF NOT LESS THAN 2 HOURS, WITH NO LEAKS.

   E. DUCTWORK AND PIPING SHALL BE BALANCED BY QUALIFIED BALANCING PERSONNEL WHO HAVE PREVIOUS EXPERIENCE WITH BALANCING PROCEDURES.

   F. BEFORE DOMESTIC WATER PIPING IS PLACED IN SERVICE, ALL DOMESTIC WATER DISTRIBUTION SYSTEMS, INCLUDING THOSE FOR COLD WATER AND HOT WATER SYSTEMS, SHALL BE FLUSHED, STERILIZED AND CHLORINATED IN ACCORDANCE WITH HEALTH DEPARTMENT REGULATIONS. THE SYSTEMS SHALL BE THOROUGHLY FLUSHED OF ALL DIRT AND FOREIGN MATTER, THEN FILLED WITH WATER TREATED WITH 50 PPM OF CHLORINE. DURING THE FILLING PROCESS, VALVES AND FAUCETS SHALL BE OPENED SEVERAL TIMES TO ASSURE TREATMENT OF THE ENTIRE SYSTEM. THE TREATED WATER SHALL BE LEFT IN THE SYSTEM FOR 24 HOURS AFTER WHICH TIME THE SYSTEM SHALL BE FLUSHED; IF THE RESIDUAL CHLORINE IS NOT LESS THAN 10 PPM, THE FLUSHING SHALL BE REPEATED. AFTER STERILIZATION, SAMPLES OF WATER IN THE SYSTEM SHALL BE APPROVED BY THE BOARD OF HEALTH.

6. PLUMBING:

   A. PROVIDE AN APPROVED WATER HAMMER ARRESTOR FOR EACH PLUMBING FIXTURE SUPPLY AS REQUIRED BY FIXTURE MANUFACTURER.

   B. ALL EXPOSED WASTE PIPE SHALL BE CHROME PLATED BRASS PIPE, NO FERROUS PIPE.

   C. PROVIDE CLEANOUTS AT EACH CHANGE OF DIRECTION AND AT 100 FOOT INTERVALS IN STRAIGHT RUNS.

   D. PROVIDE ACCESS PANELS FOR ALL CONCEALED VALVES AND TRAPS.

   E. CLEANOUTS:

      1) VINYL TILE FLOOR: JR SMITH #4140, OR EQUAL.
      2) QUARRY TILE FLOOR: JR SMITH #4200, OR EQUAL.
      3) CARPETED FLOOR: JR SMITH #4020-Y, OR EQUAL.
      4) UNFINISHED FLOOR: JR SMITH #4020, OR EQUAL.
      5) WALL: JR SMITH #4472, OR EQUAL, 24" ABOVE THE FLOOR.
      6) GRADE: JR SMITH #4256, OR EQUAL, WITH HEAVY DUTY CAST IRON BODY AND COVER.

   F. PROVIDE DIELECTRIC UNIONS WITH APPROPRIATE END CONNECTIONS TO MATCH THE PIPE SYSTEM IN WHICH INSTALLED (SCREWED, SOLDERED, OR FLANGED). PROVIDE DIELECTRIC UNIONS ON ALL PIPING CONNECTIONS TO HOT WATER HEATERS AND EXPANSION TANKS.

   G. WATER HEATERS:

      1) BOTTOM FED WATER HEATERS AND TANKS CONNECT TO WATER HEATERS SHALL HAVE A VACCUM RELIEF VALVE INSTALLED. ANSI Z21.22.
      2) STORAGE HEATERS OPERATING ABOVE ATMOSPHERIC PRESSURE SHALL HAVE AN APPROVED PRESSURE RELIEF VALVE AND/OR TEMPERATURE RELIEF VALVE.

   H. ALL SEWER PIPING LOCATED INSIDE THE BUILDING SHALL BE INSTALLED WITH THE FOLLOWING SLOPES.

      1) INSTALL 2-1/2" AND SMALLER PIPE AT 1/4" PER FOOT FALL.
      2) INSTALL 3" AND LARGER PIPE AT 1/8" PER FOOT FALL.

   I. ALL SEWER PIPING LOCATED EXTERIOR TO THE BUILDING SHALL BE INSTALLED WITH THE FOLLOWING SLOPES.

      1) INSTALL 4" AND SMALLER PIPE AT A MINIMUM OF 2% SLOPE.
      2) INSTALL 6" AND LARGER PIPE AT A MINIMUM OF 1% SLOPE.

7. PIPING:

   A. DOMESTIC COLD AND HOT WATER (ABOVEGROUND).

      1) TYPE L HARD DRAWN COPPER TUBING, ASTM B-88.
         a) WROUGHT COPPER SOLDERED FITTINGS, ASTM B75 ALLOY C12200. ANSI B16.22. MSS SP-104.
         b) MECHANICAL PRESS COPPER FITTINGS FOR USE IN PLUMBING OR MECHANICAL APPLICATIONS. ASME B16.22, ASME B16.51, or ASME B16.18. MECHANICAL PRESS COPPER FITTINGS SHALL CONFORM TO IAPMO PS-117 OR ASME B16.51.
      2) PEX, HIGH-DENSITY CROSS-LINKED POLYETHYLENE TUBING SHALL BE MANUFACTURED TO THE REQUIREMENTS OF ASTM F876 AND MEET THE STANDARD GRADE HYDROSTATIC PRESSURE RATINGS FROM PLASTIC PIPE INSTITUTE IN ACCORDANCE WITH TR-4/03. (MUST BE INSTALLED PER THE MANUFACTURERS REQUIREMENTS FOR PLENUM USE)
         a) PEX-A AND PEX-B MEETING ANSI/NSF61 AND ANSI/NSF372 STANDARDS FOR POTABLE WATER SAFETY AND LEAD-FREE STANDARDS AND MUST BE MARKED WITH "PW-G", "NSF-61-G" OR OTHER NSF-APPROVED MARKING. ASTM F2023 FOR USE WITH CHLORINATED WATER. (MUST BE INSTALLED PER THE MANUFACTURERS REQUIREMENTS FOR PLENUM USE)
         b) PEX MECHANICAL, CRIMP/INSERT OR EXPANSION FITTINGS INSTALLED IN ACCORDANCE WITH MANUFACTURER'S INSTRUCTIONS. PIPE SIZES GIVEN ON THE DRAWINGS ARE NOMINAL COPPER PIPE SIZE, INCREASE PEX PIPING SIZE TO EQUAL OR EXCEED COPPER PIPE INSIDE DIAMETER FOR SUPPLY MAINS. (MUST BE INSTALLED PER THE MANUFACTURERS REQUIREMENTS FOR PLENUM USE)
      3) VALVES
         a) TO BE INSTALLED ON THE FIXTURE SUPPLY TO EACH PLUMBING FIXTURE.
         b) TO BE INSTALLED ON THE WATER SUPPLY SIDE TO EACH APPLIANCE OR MECHANICAL EQUIPMENT.
         c) TYPES:
            1. GATE VALVE: JOMAR T/S-301G OR EQUAL. LEAD-FREE NSF 61, ANSI B1.20.1.
            2. GLOBE VALVE: JOMAR TGG OR EQUAL.
            3. BALL VALVE: JOMAR JP100PxP OR EQUAL COMPACT LEAD FREE BRASS BALL VALVE. UL842, CSA 3371-12 & 3371-92, FM, CALIFORNIA CODE AB1953, NSF61 ANNEX G APPROVED.
            4. BALL VALVE: JOMAR T-100NE OR EQUAL. UL842, FM, CSA, NSF 61-8, MSS SP-110

   B. DOMESTIC WATER SERVICE

      1) TYPE K SOFT DRAWN COPPER TUBING, ASTM B-88.
         a) Cast Copper Alloy Fittings for Flared Copper Tube, ASME/ANSI B16.26:
      2) HDPE, PIGMENTED BLUE THROUGHOUT, CTS SIZES 1"-2" AWWA C901 4710 DR9 PC250 IPS SIZES 2"-3", AWWA C901 4710 DR11 PC200 MATERIAL AND INSTALLATION MUST CONFORM TO WATER DEPARTMENT REQUIREMENTS.

   C. LEAD CONTENT OF WATER SUPPLY PIPE AND FITTINGS:

      1) PIPE AND PIPE FITTINGS, INCLUDING VALVES AND FAUCETS, UTILIZED IN THE WATER SUPPLY SYSTEM SHALL NOT HAVE MORE THAN 8% LEAD CONTENT.
      2) PIPE, PIPE FITTINGS, JOINTS, VALVES, FAUCETS, AND FIXTURE FITINGS UTILIZED TO SUPPLY WATER FOR DRINKING OR COOKING PURPOSES SHALL COMPLY WITH NSF 372 AND SHALL HAVE A WEIGHTED AVERAGE LEAD CONTENT OF 0.25% OR LESS.

MECHANICAL SPECIFICATIONS (CONTINUED)

   D. SANITARY SEWER AND VENTS. (UNDERGROUND, INTERIOR TO THE BUILDING).

      1) ABS SCHEDULE 40 CELLULAR CORE (FOAM CORE) PIPE AND DWV FITTING SYSTEM: PIPE AND FITTINGS SHALL BE MANUFACTURED FROM ABS COMPOUND WITH A CELL CLASS OF 42222 FOR PIPE AND 32222 FOR FITTINGS AS PER ASTM D 3965 AND CONFORM WITH NATIONAL SANITATION FOUNDATION (NSF) STANDARD 14. PIPE SHALL BE IRON PIPE SIZE (IPS) CONFORMING TO ASTM F 628 FITTINGS SHALL CONFORM TO ASTM D 2661. SOLVENT CEMENTS SHALL CONFORM TO ASTM D 2235.
      2) PVC SCHEDULE 40 CELLULAR CORE (FOAM CORE) PIPE AND DWV FITTING SYSTEM: PIPE AND FITTINGS SHALL BE MANUFACTURED FROM PVC COMPOUND WITH A CELL CLASS OF 11432 PER ASTM D 4396 FOR PIPE AND 12454 PER ASTM D 1784 FOR FITTINGS AND CONFORM WITH NATIONAL SANITATION FOUNDATION (NSF) STANDARD 14. PIPE SHALL BE IRON PIPE SIZE (IPS) CONFORMING TO ASTM F 891. INJECTION MOLDED FITTINGS SHALL CONFORM TO ASTM D 2665. FABRICATED FITTINGS SHALL CONFORM TO ASTM F 1866. SOLVENT CEMENTS SHALL CONFORM TO ASTM D 2564.
      3) PVC SCHEDULE 40 SOLID WALL PIPE AND DWV FITTING SYSTEM: PIPE AND FITTINGS SHALL BE MANUFACTURED FROM PVC COMPOUND WITH A CELL CLASS OF 12454 PER ASTM D 1784 AND CONFORM WITH NATIONAL SANITATION FOUNDATION (NSF) STANDARD 14. PIPE SHALL BE IRON PIPE SIZE (IPS) CONFORMING TO ASTM D 1785 AND ASTM D 2665. INJECTION MOLDED FITTINGS SHALL CONFORM TO ASTM D 2665. FABRICATED FITTINGS SHALL CONFORM TO ASTM F 1866. SOLVENT CEMENTS SHALL CONFORM TO ASTM D 2564.
      4) HUBLESS CAST IRON SOIL PIPE AND FITTINGS: HUBLESS CAST IRON PIPE AND FITTINGS SHALL BE MANUFACTURED FROM GRAY CAST IRON AND SHALL CONFORM TO ASTM A 888 AND CISPI STANDARD 301. HUBLESS COUPLINGS SHALL CONFORM TO CISPI STANDARD 310 AND BE CERTIFIED BY NSF® INTERNATIONAL.
      5) HUB AND SPIGOT CAST IRON SOIL PIPE AND FITTINGS: HUB AND SPIGOT CAST IRON PIPE AND FITTINGS SHALL BE MANUFACTURED FROM GRAY CAST IRON AND SHALL CONFORM TO ASTM A 74.

   E. SANITARY SEWER AND VENTS. (ABOVE GROUND, INTERIOR TO THE BUILDING).

      1) ABS SCHEDULE 40 CELLULAR CORE (FOAM CORE) PIPE AND DWV FITTING SYSTEM: PIPE AND FITTINGS SHALL BE MANUFACTURED FROM ABS COMPOUND WITH A CELL CLASS OF 42222 FOR PIPE AND 32222 FOR FITTINGS AS PER ASTM D 3965 AND CONFORM WITH NATIONAL SANITATION FOUNDATION (NSF) STANDARD 14. PIPE SHALL BE IRON PIPE SIZE (IPS) CONFORMING TO ASTM F 628 FITTINGS SHALL CONFORM TO ASTM D 2661. SOLVENT CEMENTS SHALL CONFORM TO ASTM D 2235. (NOT FOR USE IN A RETURN AIR PLENUM)
      2) PVC SCHEDULE 40 CELLULAR CORE (FOAM CORE) PIPE AND DWV FITTING SYSTEM: PIPE AND FITTINGS SHALL BE MANUFACTURED FROM PVC COMPOUND WITH A CELL CLASS OF 11432 PER ASTM D 4396 FOR PIPE AND 12454 PER ASTM D 1784 FOR FITTINGS AND CONFORM WITH NATIONAL SANITATION FOUNDATION (NSF) STANDARD 14. PIPE SHALL BE IRON PIPE SIZE (IPS) CONFORMING TO ASTM F 891. INJECTION MOLDED FITTINGS SHALL CONFORM TO ASTM D 2665. FABRICATED FITTINGS SHALL CONFORM TO ASTM F 1866. SOLVENT CEMENTS SHALL CONFORM TO ASTM D 2564. (NOT FOR USE IN A RETURN AIR PLENUM)
      3) PVC SCHEDULE 40 SOLID WALL PIPE AND DWV FITTING SYSTEM: PIPE AND FITTINGS SHALL BE MANUFACTURED FROM PVC COMPOUND WITH A CELL CLASS OF 12454 PER ASTM D 1784 AND CONFORM WITH NATIONAL SANITATION FOUNDATION (NSF) STANDARD 14. PIPE SHALL BE IRON PIPE SIZE (IPS) CONFORMING TO ASTM D 1785 AND ASTM D 2665. INJECTION MOLDED FITTINGS SHALL CONFORM TO ASTM D 2665. FABRICATED FITTINGS SHALL CONFORM TO ASTM F 1866. SOLVENT CEMENTS SHALL CONFORM TO ASTM D 2564. (WHERE APPROVED BY LOCAL JURISDICTIONS) (NOT FOR USE IN A RETURN AIR PLENUM)
      4) HUBLESS CAST IRON SOIL PIPE AND FITTINGS: HUBLESS CAST IRON PIPE AND FITTINGS SHALL BE MANUFACTURED FROM GRAY CAST IRON AND SHALL CONFORM TO ASTM A 888 AND CISPI STANDARD 301. HUBLESS COUPLINGS SHALL CONFORM TO CISPI STANDARD 310 AND BE CERTIFIED BY NSF® INTERNATIONAL.
      5) HUB AND SPIGOT CAST IRON SOIL PIPE AND FITTINGS: HUB AND SPIGOT CAST IRON PIPE AND FITTINGS SHALL BE MANUFACTURED FROM GRAY CAST IRON AND SHALL CONFORM TO ASTM A 74.

   F. SANITARY SEWER. (UNDERGROUND, EXTERIOR TO THE BUILDING).

      1) ABS SCHEDULE 40 CELLULAR CORE (FOAM CORE) PIPE AND DWV FITTING SYSTEM: PIPE AND FITTINGS SHALL BE MANUFACTURED FROM ABS COMPOUND WITH A CELL CLASS OF 42222 FOR PIPE AND 32222 FOR FITTINGS AS PER ASTM D 3965 AND CONFORM WITH NATIONAL SANITATION FOUNDATION (NSF) STANDARD 14. PIPE SHALL BE IRON PIPE SIZE (IPS) CONFORMING TO ASTM F 2680 FITTINGS SHALL CONFORM TO ASTM D 2680. SOLVENT CEMENTS SHALL CONFORM TO ASTM D 2235.
      2) PVC SCHEDULE 40 CELLULAR CORE (FOAM CORE) PIPE AND DWV FITTING SYSTEM: PIPE AND FITTINGS SHALL BE MANUFACTURED FROM PVC COMPOUND WITH A CELL CLASS OF 11432 PER ASTM D 4396 FOR PIPE AND 12454 PER ASTM D 1784 FOR FITTINGS AND CONFORM WITH NATIONAL SANITATION FOUNDATION (NSF) STANDARD 14. PIPE SHALL BE IRON PIPE SIZE (IPS) CONFORMING TO ASTM F 891. INJECTION MOLDED FITTINGS SHALL CONFORM TO ASTM F 794. FABRICATED FITTINGS SHALL CONFORM TO ASTM F 1866. SOLVENT CEMENTS SHALL CONFORM TO ASTM D 2564.
      3) PVC SCHEDULE 40 SOLID WALL PIPE AND DWV FITTING SYSTEM: PIPE AND FITTINGS SHALL BE MANUFACTURED FROM PVC COMPOUND WITH A CELL CLASS OF 12454 PER ASTM D 1784 AND CONFORM WITH NATIONAL SANITATION FOUNDATION (NSF) STANDARD 14. PIPE SHALL BE IRON PIPE SIZE (IPS) CONFORMING TO ASTM F 794. FITTINGS SHALL CONFORM TO ASTM F 794. SOLVENT CEMENTS SHALL CONFORM TO ASTM D 2564.
      4) HUBLESS CAST IRON SOIL PIPE AND FITTINGS: HUBLESS CAST IRON PIPE AND FITTINGS SHALL BE MANUFACTURED FROM GRAY CAST IRON AND SHALL CONFORM TO ASTM A 888 AND CISPI STANDARD 301. HUBLESS COUPLINGS SHALL CONFORM TO CISPI STANDARD 310 AND BE CERTIFIED BY NSF® INTERNATIONAL.
      5) HUB AND SPIGOT CAST IRON SOIL PIPE AND FITTINGS: HUB AND SPIGOT CAST IRON PIPE AND FITTINGS SHALL BE MANUFACTURED FROM GRAY CAST IRON AND SHALL CONFORM TO ASTM A 74.
      6) COPPER DWV: DRAINAGE TUBE SHALL CONFORM TO ASTM B306, WROUGHT COPPER FITTINGS, ANSI B-16.29.
      7) GALVANIZED STEEL PIPE, WITH MALLEABLE IRON, THREADED FITTINGS, DRAINAGE PATTERN FOR SEWERS SHALL CONFORM TO ASTM A 53.

   G. CONDENSATE DRAINS & INDIRECT WASTE (ABOVEGROUND).

      1) DWV, WROUGHT COPPER, ANSI B-16.29 (CONDENSATE INSIDE BUILDING).

   H. REFRIGERANT.

      1) ASTM B 280, TYPE ACR, HARD-DRAWN STRAIGHT LENGTHS, AND SOFT-ANNEALED COILS, SEAMLESS COPPER TUBING.
      2) WROUGHT COPPER, ANSI B16.22, STREAMLINED PATTERN, FITTINGS. BRAZED JOINTS, AWS A 5.8, CLASSIFICATION BAG-1 (SILVER).
      3) TUBING SHALL BE FACTORY CLEANED, READY FOR INSTALLATION, AND HAVE ENDS CAPPED TO PROTECT CLEANLINESS OF PIPE INTERIORS PRIOR TO SHIPPING.
      4) SIZE AND INSTALLATION OF PIPE SHALL BE IN ACCORDANCE WITH MANUFACTURER'S RECOMMENDATIONS.

   I. PROPANE GAS.

      1) BLACK STEEL PIPE, SCHEDULE 40, ASTM A53.
         a) PIPE 3" AND SMALLER; 150 LB. MALLEABLE IRON, THREADED FITTINGS.
         b) PIPE 4" AND SMALLER; VIEGA MEGAPRESS G FOR WATER AND GAS. CSA LC4, TSSA/ASME B31 FOR USE WITH ASTM A53 SCHEDULE 40 BLACK IRON PIPE.
         c) PIPE 2-1/2" AND LARGER, WELDED.
         d) PLUG VALVE: ROCKWELL NORDSTROM FIGURE NO. 142 OR 143.
         e) BALL VALVE: JOMAR T-100NE. APPROVALS- UL842, FM, CSA, NSF 61-8, MSS SP-110
      2) GAS PIPING PAINTING:
         a) ALL BLACK STEEL GAS PIPING LOCATED EXTERIOR TO THE BUILDING SHALL BE PRIMED AND PAINTED TO EITHER MATCH ADJACENT EXTERIOR WHERE LOCATED ON OR NEAR EXTERIOR WALL AND PAINTED SAFETY YELLOW WHERE LOCATED ON THE ROOF.

   J. ALL PIPE HANGERS AND SUPPORTS SHALL BE STANDARD PRODUCTS OF GRINNELL, FEE AND MASON, OR ELCEN. HANGER SPACING SHALL BE IN ACCORDANCE WITH MSS-SP-69.

   K. SLEEVES

      1) PROVIDE, SET, AND PROPERLY LOCATE PIPE SLEEVES AS REQUIRED FOR THIS WORK. ALL SLEEVES SHALL BE OF SUFFICIENT SIZE TO PERMIT PIPE MOVEMENT DUE TO EXPANSION AND CONTRACTION AND TO ACCOMMODATE PIPE INSULATION.
      2) INTERIOR PARTITIONS: 16 GAGE GALVANIZED STEEL, PACK BETWEEN PIPE AND SLEEVE WITH FIRE SAFING AND CAULK AT EACH END WITH FIRE RESISTANT SEALANT.
      3) ROOF: PROSET OR EQUAL, MANUFACTURED PVC SCHEDULE 40 PIPE SLEEVE WITH WATERPROOF SEAL. COORDINATE WITH ROOFING CONTRACTOR AND FLASH AS REQUIRED TO MAINTAIN ROOF WARRANTY.
      4) PROTECTION AGAINST CONTACT: METALLIC PIPING, EXCEPT FOR CAST IRON, DUCTILE IRON AND GALVANIZED STEEL SHALL NOT BE PLACED IN DIRECT CONTACT WITH STEEL FRAMING MEMBERS, CONCRETE, OR CINDER WALLS AND FLOORS OR OTHER MASONRY. METALLIC PIPING SHALL NOT BE PLACED IN DIRECT CONTACT WITH CORROSIVE SOIL. SHEATHING USED TO PREVENT DIRECT CONTACT SHALL HAVE A THICKNESS OF GREATER THAN .008: AND THE SHEATHING SHALL BE MADE OF PLASTIC. ANY PIPE THAT PASSES THROUGH A FOUNDATION WALL OR FOOTING SHALL BE PROVIDED WITH A RELIEVING ARCH, OR A PIPE SLEEVE SHALL BE BUILT INTO THE FOUNDATION WALL. THE SLEEVE SHALL BE TWO SIZES GREATER THAN THE PIPE PASSING THOUGH THE WALL OR FOOTING.
      5) PLUMBING VENTS: FLASH ROOF VENT INTO ROOFING SYSTEM AS REQUIRED BY THE ROOFING CONTRACTOR TO MAINTAIN EXISTING ROOF WARRANTY. ALL PLUMBING VENT TERMINALS SHALL TERMINATE A MINIMUM OF 12" ABOVE ROOF OR EQUAL TO HEIGHT OF PARAPET, WHICHEVER IS GREATER.

   L. PROVIDE CHROME PLATED ESCUTCHEONS ON ALL PIPE ENTERING FINISHED AREAS.

MECHANICAL SPECIFICATIONS (CONTINUED)

9. INSULATION AND DUCT LINING:

   A. ALL INSULATIONS AND ACCESSORIES SHALL HAVE A FIRE HAZARD CLASSIFICATION WITH A FLAME SPREAD RATING OF NOT OVER 25, A FUEL CONTRIBUTION RATING OF NOT OVER 50, AND A SMOKE DEVELOPED RATING OF NOT OVER 50, IN ACCORDANCE WITH NFPA.

   B. PIPE INSULATION - ABOVE GRADE:

      1) THE PIPING INSULATION USED SHALL HAVE A THERMAL CONDUCTIVITY OF 0.27 Btu PER in/hr*sqft*F° OR LESS.
      2) FIBERGLASS INSULATION WITH FACTORY APPLIED VAPOR BARRIER, ASJ JACKET, FACTORY APPLIED PRESSURE SEALING LONGITUDE LAP JOINT, NO STAPLES, ZESTON PREMOLDED PVC FITTING COVERS. INSTALLATION SHALL BE IN ACCORDANCE WITH MANUFACTURER'S RECOMMENDATIONS.
      3) FLEXIBLE CLOSED CELL ELASTOMERIC THERMAL INSULATION, UNSLIT OR PRESLIT WITH PRESSURE SENSITIVE ADHESIVE SYSTEM FOR CLOSURE AND VAPOR SEALING, EQUAL TO ARMSTRONG AP ARMAFLEX OR ARMAFLEX 2000.
      4) FOR NON CIRCULATING SYSTEMS, THE FIRST 8 FEET OF INLET AND OUTLET PIPING BETWEEN THE TANK AND THE HEAT TRAP (INCLUDING THE HEAT TRAP) MUST BE INSULATED.
      5) FOR CIRCULATING SYSTEMS, ALL HOT WATER PIPING IN THE CIRCULATION LOOP MUST BE INSULATED AS SPECIFIED BELOW.
      6) INSULATION SCHEDULE:

a) DOMESTIC COLD WATER	1/2"
b) DOMESTIC HOT WATER	1"
c) REFRIGERANT SUCTION	3/4"

   C. DUCTWORK: ACOUSTICAL INSULATION.

      1) DUCT LINING: 2 LB/CF, THICKNESS AS SCHEDULED, AIR STREAM SIDE COATED, INSTALL PER SMACNA STANDARDS.
         a) DUCT LINING SCHEDULE:

(1) RECTANGULAR SUPPLY DUCT	1/2" : THROUGHOUT THE FIRST 10 FEET OF DUCT.
(2) RETURN AIR DUCT	1/2" : THROUGHOUT THE FIRST 10 FEET OF DUCT.

   D. DUCTWORK: THERMAL INSULATION.

      1) DUCT COVERING: 3/4 LB/CF, FIBERGLASS BLANKET WITH FACTORY APPLIED VAPOR BARRIER AND FACING, THICKNESS AS SCHEDULED, INSTALLATION IN ACCORDANCE WITH MANUFACTURERS RECOMMENDATIONS.
         a) DUCT COVERING SCHEDULE: MINIMUM R-6

(1) ROUND SUPPLY DUCT	2"
(2) RECTANGULAR SUPPLY DUCT	2"
(3) OUTDOOR AIR / MAKE-UP AIR DUCT	2"

10. DUCTWORK:

   A. ALL DUCTWORK, UNLESS OTHERWISE INDICATED, SHALL BE FABRICATED FROM GALVANIZED SHEET STEEL COMPLYING WITH ASTM A 527, LOCKFORMING QUALITY, WITH G 60 ZINC COATING IN ACCORDANCE WITH ASTM A 525; AND MILL PHOSPHATIZED FOR EXPOSED LOCATIONS.

   B. DUCTWORK, METAL GAUGES, REINFORCING, ETC. SHALL BE CONSTRUCTED IN ACCORDANCE WITH SMACNA "HVAC DUCT CONSTRUCTION STANDARDS," LATEST EDITION FOR A 2 INCH WATER GAUGE STATIC PRESSURE.

   C. ALL FITTINGS SHALL BE CONSTRUCTED IN ACCORDANCE WITH SMACNA "HVAC DUCT CONSTRUCTION STANDARDS," LATEST EDITION.

   D. SEAL ALL CONCEALED DUCTWORK JOINTS WITH NON-HARDENING, NON-MIGRATING MASTIC SEALANT, AS RECOMMENDED FOR SEALING SEAMS AND JOINTS IN DUCTWORK. OIL BASE CAULKING AND GLAZING COMPOUNDS SHALL NOT BE ACCEPTABLE. DUCTS SHALL BE SEALED TO THE CLASS LEVEL LISTED BELOW.

1) UNCONDITIONED SPACES	CLASS B	CLASS A	CLASS C	CLASS B
1) CONDITIONED SPACES (PLENUM)	CLASS C	CLASS B	CLASS B	CLASS C
	SUPPLY ≤ 2" W.C.	SUPPLY > 2" W.C.	EXHAUST	RETURN

   E. DUCT SIZES SHOWN ON THE DRAWINGS ARE SHEETMETAL SIZES, ALLOWANCE FOR DUCT LINER HAS BEEN MADE WHERE APPLICABLE.

11. FLEXIBLE DUCT:

   A. ATCO #086 (R-6), OR EQUAL.

   B. FACTORY APPLIED INSULATION AND VAPOR BARRIER, 1-1/2" THICK.

   C. MAXIMUM LENGTH OF 5'-0".

12. FLUES AND ACCESSORIES:

   A. FLUES SHALL BE DOUBLE WALL TYPE B EQUAL TO METALBESTOS. PROVIDE MANUFACTURER'S STANDARD FITTINGS AND ACCESSORIES (ROOF THIMBLE, STORM COLLAR, COUNTERFLASHING, ETC.) AS REQUIRED FOR A COMPLETE INSTALLATION.

13. EXHAUST FANS:

   A. CENTRIFUGAL CEILING EXHAUSTERS SHALL BE ELECTRICALLY POWERED CENTRIFUGAL TYPE FAN SUITABLE FOR MOUNTING IN THE CEILING WITH A PERFORATED OFF-WHITE METAL GRILLE WITH A THUMBSCREW ATTACHMENT FOR EASY ACCESS TO FAN HOUSING. UNIT SHALL CONSIST OF A GALVANIZED STEEL HOUSING LINED WITH ACOUSTICAL INSULATION AND SHALL INCLUDE AN INTEGRAL BACKDRAFT DAMPER ON FAN DISCHARGE. MOTOR SHALL BE A PERMANENT SPLIT-CAPACITOR TYPE MOTOR, PERMANENTLY LUBRICATED, WITH THERMAL OVERLOAD PROTECTION. PROVIDE DISCONNECT SWITCH OR OTHER MEANS OF DISCONNECT AT MOTOR IN FAN HOUSING.

   B. PROPELLER WALL EXHAUSTERS SHALL BE ELECTRICALLY POWERED PROPELLER TYPE FAN SUITABLE FOR MOUNTING IN THE WALL WITH A METAL GRILLE WITH A THUMBSCREW ATTACHMENT FOR EASY ACCESS TO FAN HOUSING. UNIT SHALL CONSIST OF A GALVANIZED STEEL HOUSING LINED WITH ACOUSTICAL INSULATION AND SHALL INCLUDE AN INTEGRAL BACKDRAFT DAMPER ON FAN DISCHARGE. MOTOR SHALL BE A PERMANENT SPLIT-CAPACITOR TYPE MOTOR, PERMANENTLY LUBRICATED, WITH THERMAL OVERLOAD PROTECTION. PROVIDE WALL SLEEVE, WEATHER HOOD, OSHA SCREEN, AND DISCONNECT SWITCH OR OTHER MEANS OF DISCONNECT AT MOTOR IN FAN HOUSING.

14. AIR HANDLING UNIT AND HEAT PUMP CONDENSING UNIT:

   A. AIR HANDLING UNIT SHALL BE FACTORY ASSEMBLED, PRE-WIRED UNIT CONSISTING OF SHEETMETAL CASING, FILTER, SUPPLY FAN, ELECTRIC RESISTANCE HEATER, AND CONTROLS. CAPACITY SHALL BE AS SCHEDULED.

      1) THE UNIT SHALL BE EQUIPPED WITH THE MANUFACTURER'S STANDARD CONTROLS INCLUDING 24 VOLT CONTROL TRANSFORMER, HIGH TEMPERATURE LIMIT SWITCH, AND FAN TIMED DELAY RELAY.
      2) RETURN AIR INLET ON UNIT SHALL BE PROVIDED WITH A 1" THROWAWAY TYPE FILTER AND SLIDE IN FRAME, MOUNTED ON THE UNIT.
      3) FAN SHALL BE A DIRECT DRIVE MULTI-SPEED BLOWER, RESILIENTLY MOUNTED IN THE CASING. MOTOR SHALL BE PROVIDED WITH AUTOMATIC THERMAL OVERLOAD PROTECTION.
      4) REFRIGERANT COIL: ALUMINUM FINS BONDED TO SEAMLESS COPPER TUBE BY MEANS OF MECHANICAL EXPANSION. AN EQUALIZING TYPE VERTICAL DISTRIBUTOR SHALL ENSURE EACH COIL CIRCUIT RECEIVES THE SAME AMOUNT OF REFRIGERANT.
      5) ELECTRIC HEAT: ELECTRIC HEATER SHALL BE INSTALLED INTERNAL TO THE AIR HANDLING UNIT. HEATING ELEMENTS SHALL BE CONSTRUCTED OF HEAVY DUTY NICKEL CHROMIUM. EACH HEATER SHALL HAVE AUTOMATICALLY RESET HIGH LIMIT CONTROL OPERATING THROUGH HEATING ELEMENT CONTACTORS. EACH HEATER SHALL BE INDIVIDUALLY FUSED AND SHALL COMPLY WITH ALL NEC REQUIREMENTS. HEATERS SHALL BE UL LISTED.

   B. HEAT PUMP CONDENSING UNIT SHALL BE FACTORY-ASSEMBLED AND TESTED AIR-COOLED CONDENSING UNIT, CONSISTING OF COMPRESSOR, CONDENSER COIL, FAN, MOTOR, REVERSING VALVE, SOLID-STATE DEFROST CONTROL UTILIZING THERMISTERS, REFRIGERANT RESERVOIR, OPERATING CONTROLS, ETC. CAPACITY AND ELECTRICAL CHARACTERISTICS SHALL BE AS SCHEDULED.

      1) HERMETICALLY SEALED COMPRESSOR WITH BUILT-IN OVERLOADS AND VIBRATION ISOLATION. COMPRESSOR MOTOR, SHALL HAVE THERMAL AND CURRENT SENSITIVE OVERLOAD DEVICES, INTERNAL HIGH-PRESSURE PROTECTION, HIGH AND LOW PRESSURE CUTOUT SWITCHES, START CAPACITOR AND RELAY, 2-POLE CONTACTOR, CRANKCASE HEATER, AND TEMPERATURE ACTUATED SWITCH AND TIMER TO PREVENT COMPRESSOR RAPID CYCLE.
      2) COIL SHALL BE COPPER TUBING WITH ALUMINUM FINS; COMPLETE WITH LIQUID ACCUMULATOR AND LIQUID SUBCOOLER. EXTEND REFRIGERANT PIPING WITH BRASS SERVICE VALVES, FITTINGS, AND GAGE PORTS TO EXTERIOR OF CASING.
      3) ALUMINUM PROPELLER FAN SHALL BE DIRECT DRIVEN, WITH PERMANENTLY LUBRICATED FAN MOTOR HAVING THERMAL OVERLOAD PROTECTION.
      4) PROVIDE REVERSING VALVE, SUCTION LINE ACCUMULATOR, DISCHARGE MUFFLER, FLOW CONTROL CHECK VALVE, AND SOLID-STATE DEFROST CONTROL UTILIZING THERMISTERS.

MECHANICAL SPECIFICATIONS (CONTINUED)

15. UNIT HEATERS:

   A. UNIT HEATERS SHALL BE FACTORY ASSEMBLED, PRE-WIRED UNITS CONSISTING OF CASING, SUPPLY FAN, GAS FIRED HEAT EXCHANGER, AND CONTROLS.

   B. MOTOR SHALL BE TOTALLY ENCLOSED, WITH BUILT-IN, AUTOMATIC THERMAL OVERLOAD PROTECTION. PROPELLER SHALL BE EQUIPPED WITH SAFETY FAN GUARD.

   C. THE HEAT EXCHANGER SHALL BE ALUMINIZED STEEL CONSTRUCTION.

   D. THE UNITS SHALL BE EQUIPPED WITH THE MANUFACTURER'S STANDARD CONTROLS INCLUDING 24 VOLT CONTROL TRANSFORMER, AUTOMATIC SPARK IGNITION, AUTOMATIC GAS VALVE WITH GAS TRAIN, SAFETY PILOT WITH 100% SHUTOFF, AND FAN TIMED DELAY RELAY.

   E. UNIT HEATERS SHALL BE AGA APPROVED.

16. CONTROL WIRING:

   A. ELECTRICAL WIRING AND WIRING CONNECTIONS REQUIRED FOR THE INSTALLATION OF THE TEMPERATURE CONTROL SYSTEM, SHALL BE PROVIDED BY THIS CONTRACTOR, UNLESS SPECIFICALLY SHOWN ON THE ELECTRICAL DRAWINGS OR SPECIFICATIONS.

   B. INSTALL CONTROL WIRING, WITHOUT SPLICES BETWEEN TERMINAL POINTS, COLOR CODED. INSTALL IN NEAT WORKMANLIKE MANNER, SECURELY FASTENED. INSTALL IN ACCORDANCE WITH NATIONAL ELECTRICAL CODE AND THE ELECTRICAL SPECIFICATIONS.

      1) INSTALL CIRCUITS OVER 25 VOLT WITH COLOR CODED NUMBER 12 WIRE.
      2) INSTALL CIRCUITS UNDER 25 VOLT WITH COLOR CODED NUMBER 18 WIRE WITH 0.031 INCH HIGH TEMPERATURE 105 DEGREES F PLASTIC INSULATION ON EACH CONDUCTOR AND PLASTIC SHEATH OVER ALL.
      3) INSTALL ELECTRONIC CIRCUITS WITH COLOR CODED NUMBER 22 WIRE WITH 0.023 INCH POLYETHYLENE INSULATION ON EACH CONDUCTOR WITH PLASTIC JACKETED COPPER SHIELD OVER ALL.
      4) INSTALL LOW VOLTAGE CIRCUITS, LOCATED IN CONCRETE SLABS AND MASONRY WALLS, OR EXPOSED IN OCCUPIED AREAS, IN ELECTRIC CONDUIT.
      5) ALL WIRING IN AREAS USED AS AIR PLENUMS SHALL BE IN ELECTRIC CONDUIT EXCEPT THAT LOW VOLTAGE WIRING MAY BE TEFLON COATED, ALUMINUM SHEATHED CABLE OR OTHER WIRE SPECIFICALLY APPROVED FOR INSTALLATION IN AIR PLENUMS, WHERE ACCEPTABLE BY LOCAL CODES.
      6) ALL WIRING IN AREAS NOT USED FOR AIR MOVEMENT SHALL BE IN ELECTRIC METALLIC TUBING EXCEPT LOW VOLTAGE WIRING MAY BE IN APPROVED SIGNAL CABLE WHERE ACCEPTED BY LOCAL CODES.

   C. THERMOSTATIC CONTROLS TO HAVE A 5°F DEADBAND AND SETPOINT OVERLAP RESTRICTIONS.

      1) TEMPERATURE CONTROLS SETBACK TO BE 55°F (HEAT) AND 85° (COOL), 2-HOUR OCCUPANT OVERRIDE, 10-HOUR BACKUP.

17. FIRE DAMPERS:

   A. STATIC FIRE DAMPERS FOR SQUARE DUCTS SHALL BE RUSKIN IBD20, TYPE B OR EQUAL. FURNISH AND INSTALL AT LOCATIONS SHOWN ON PLANS, STATIC FIRE DAMPERS TESTED, CONSTRUCTED, AND LABELED IN ACCORDANCE WITH THE LATEST EDITION OF UL555 STANDARD. DAMPERS SHALL HAVE A FIRE RATING OF 1-½, HOURS AND SHALL MEET THE REQUIREMENTS OF THE LATEST EDITION OF NFPA90A. CURTAIN TYPE FIRE DAMPERS SUITABLE FOR VERTICAL WALL OR PARTITIONS AND HORIZONTAL MASONRY FLOOR OR CEILING WITH A FIRE RESISTANCE RATING OF LESS THAN 3 HOURS. DAMPER FRAME AND BLADES SHALL BE GALVANIZED STEEL IN GAUGES REQUIRED BY UL LISTING R5531 INSTALLED IN A FACTORY MOUNTED SLEEVE AND SHIPPED WITH LOOSE MOUNTING ANGLE. DAMPER BLADES SHALL BE STEEL INTERLOCK TO PROVIDE FIRE SHIELD IN GAUGES REQUIRED BY UL LISTING R5531. CLOSURE SPRINGS ON HORIZONTAL MOUNTED DAMPERS SHALL BE OF 301 STAINLESS STEEL AND SHALL BE CONSTANT FORCE TYPE. EACH FIRE DAMPER SHALL HAVE A 1½ HOUR, FIRE PROTECTION RATING AND SHALL BE SUPPLIED WITH A 165°F OR 212°F FUSIBLE LINK. DAMPER SHALL BE INSTALLED IN STATIC (FANS OFF) SYSTEMS ONLY. SUBMITTAL INFORMATION SHALL INCLUDE THE FIRE PROTECTION RATING AND MANUFACTURER'S UL INSTALLATION INSTRUCTION.

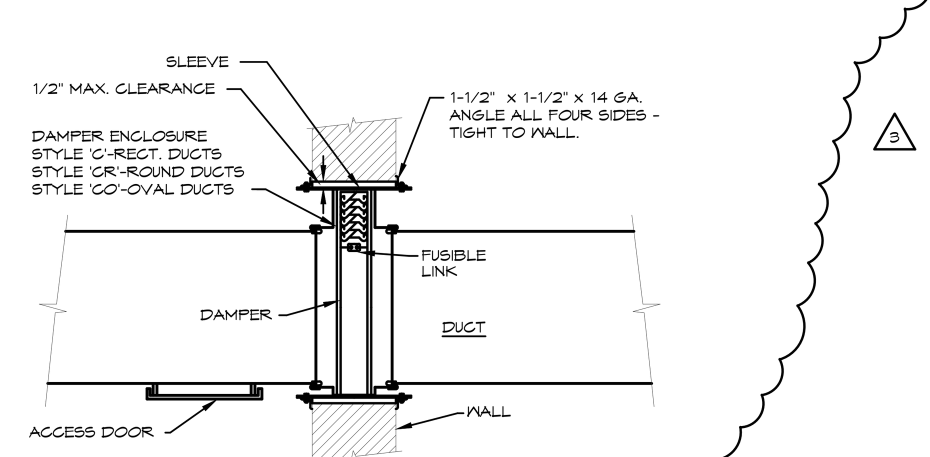

FIRE DAMPER DETAIL
SCALE: NONE

7/7/2020
STATE OF MISSOURI
ERIK B. KNUDSEN
NUMBER PE-2004026504
REGISTERED PROFESSIONAL ENGINEER

Signature BUILDERS KC.LLC

Signature Builders KC, LLC
2751 NE Douglas St. - Suite R
Lee's Summit, Missouri 64064
Phone: (816) 215-0891

Website:
www.sb-kc.net

New Airplane Hangar

CAD Construction Documents
Voice / Text : 913.638.3241
mgspencer@sbcglobal.net

Residential AutoCAD Drafting and Design Services

No.	Description	Date
1	City Comments	6/18/20

CONSTRUCTION DOCUMENTS

Project Number	2019.03
Date	2020 MAY 14
Drawn By	SP/BH
Checked By	EK/DS

MP-000

Scale	3/16" = 1'-0"

BC PROJECT #: 20388
MISSOURI PE COA #2009003629

This drawing has been prepared by the Engineer, or under his supervision. This drawing is provided as an instrument of service by the Designer/Engineer and is intended for use on this project only. Pursuant to the Architectural Works Copyright Protection Act of 1990, all drawings, specifications, ideas and designs, including the overall form, arrangement and composition of spaces and elements appearing herein, constitute the original, copyrighted work of the Designer/Engineer. Any reproduction, use, or disclosure of information contained herein without prior written consent of the Engineer is strictly prohibited. © 2020 BC Engineers, Inc.

BC ENGINEERS INCORPORATED
5720 Reeder Shawnee, Ks. 66203 (913)262-1772

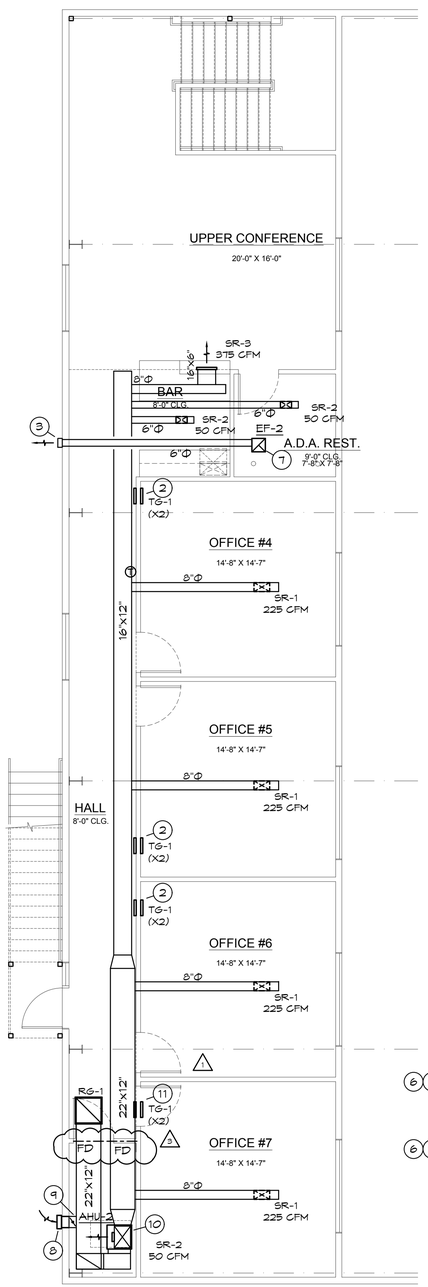

UPPER FLOOR MECHANICAL PLAN

SCALE: 3/16" = 1'-0"

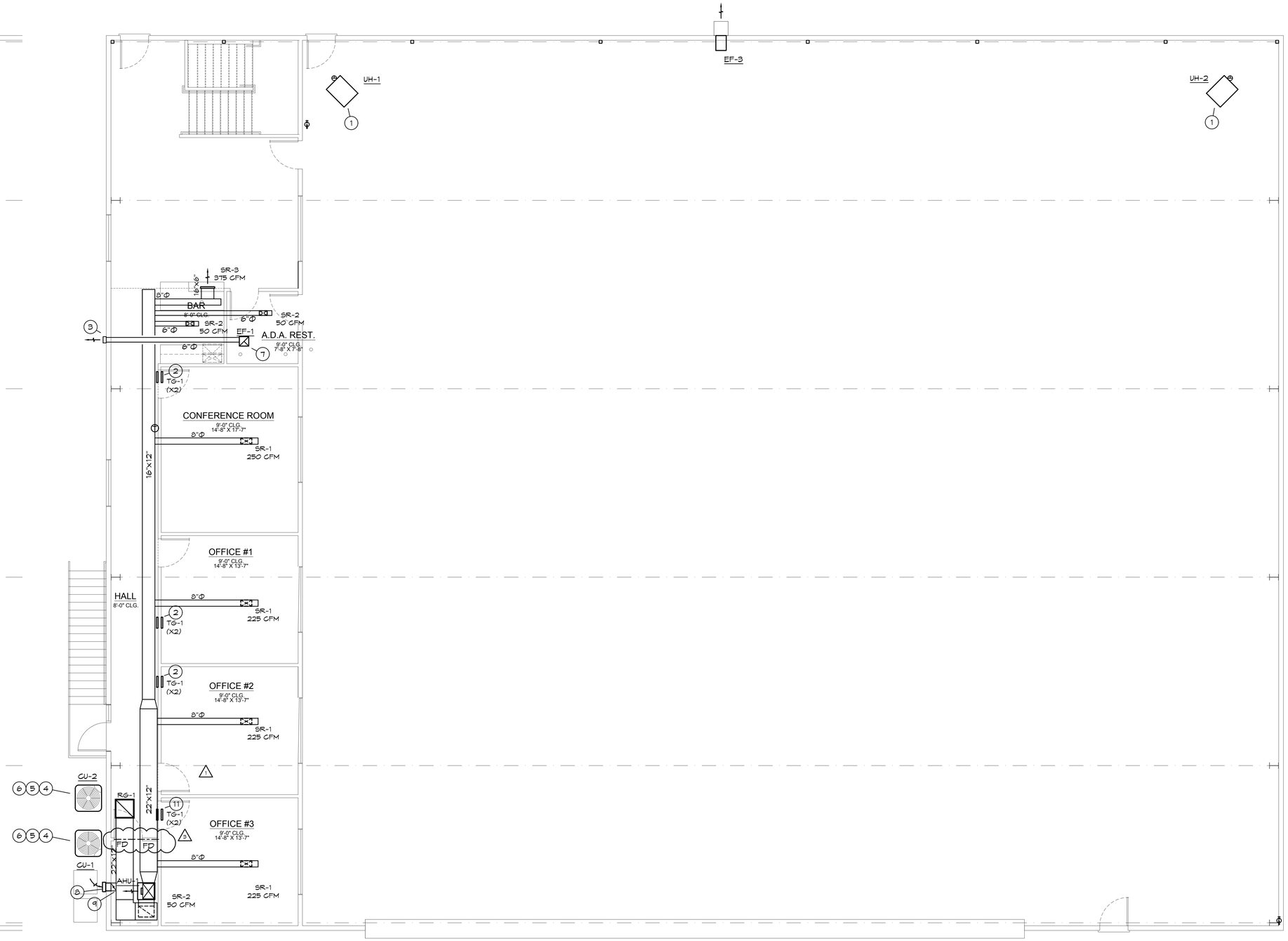

MAIN FLOOR MECHANICAL PLAN

SCALE: 3/16" = 1'-0"

MECHANICAL PLAN NOTES:

1. SUPPORT UNIT FROM STRUCTURE AS REQUIRED. ROUTE 6"Φ TYPE 'B' DOUBLE WALL FLUE UP THROUGH ROOF. PROVIDE ROOF THIMBLE, FLASHING, COUNTER FLASHING & WEATHERHEAD. LOCATE WEATHERHEAD 36" ABOVE EVERYTHING WITHIN 10'. VERIFY 10'-0" FROM ALL OUTDOOR AIR INTAKES. SEAL PENETRATION WEATHERTIGHT
2. HIGH/LOW RETURN AIR GRILLES - OFFICE SIDE GRILLE LOCATED AT 12" AFF. CENTRAL AREA SIDE LOCATED AT 8' AFF. TG-1, SEE DIFFUSER SCHEDULE.
3. PROVIDE WALL VENT CAP WITH BACKDRAFT DAMPER FOR EXHAUST FAN. SEAL PENETRATIONS WEATHERTIGHT.
4. REFRIGERANT PIPING THROUGH EXTERIOR WALL AT 18" ABOVE GRADE. SEAL WALL PENETRATION WEATHERTIGHT. ROUTE PIPE UP INSIDE WALL TO AS HIGH AS POSSIBLE AND ROUTE TO UNITS.
5. CONNECT REFRIGERANT PIPING TO CONDENSING UNIT & COIL AS REQUIRED BY THE MANUFACTURER. PROVIDE AND INSTALL REFRIGERANT PIPING FOR CONDENSING UNIT AS REQUIRED BY MANUFACTURER.

MECHANICAL PLAN NOTES:

6. PROVIDE PREFABRICATED PAD FOR CONDENSING UNITS. NO SCREENING ALLOWED AROUND CONDENSING UNITS PER FAA REGULATIONS.
7. SUPPORT FAN FROM STRUCTURE AS REQUIRED BY THE MANUFACTURER.
8. PROVIDE WALL VENT CAP FOR OUTDOOR INTAKE WITH BIRD SCREEN. SEAL PENETRATIONS WEATHERTIGHT.
9. CONNECT 10"Φ OUTDOOR AIR DUCT WITH BALANCING DAMPER AND FLEX DUCT TO RETURN AIR DUCT. REFER TO OUTDOOR AIR CALCULATIONS FOR MINIMUM OUTDOOR AIR VOLUME.
10. PROVIDE WATERPROOF GALVANIZED SHEET METAL DRAIN PAN UNDER AIR HANDLER WITH CONDENSATE FLOAT SWITCH TO DE-ENERGIZE UNIT IF DRAIN PAN FILLS WITH WATER.
11. INSTALL TRANSFER AIR GRILLES, TG-1, ABOVE DOOR ON BOTH SIDES OF WALL.

△1

BC PROJECT #: 20388
MISSOURI PE COA #2009003629

This drawing has been prepared by the Engineer, or under his supervision. This drawing is provided as an instrument of service by the Designer/Engineer and is intended for use on this project only. Pursuant to the Architectural Works Copyright Protection Act of 1990, all drawings, specifications, ideas and designs, including the overall form, arrangement and composition of spaces and elements appearing herein, constitute the original, copyrighted work of the Designer/Engineer. Any reproduction, use, or disclosure of information contained herein without prior written consent of the Engineer is strictly prohibited. © 2020 BC Engineers, Inc.

BC ENGINEERS INCORPORATED
5720 Reeder Shawnee, Ks. 66203 (913)262-1772

7/7/2020
STATE OF MISSOURI
ERIK B. KNUDSEN
NUMBER
PE-2004026504
REGISTERED PROFESSIONAL ENGINEER

Signature BUILDERS KC, LLC

Signature Builders KC, LLC
2751 NE Douglas St. - Suite R
Lee's Summit, Missouri 64064
Phone: (816) 215-0891

Website:
www.sb-kc.net

New Airplane Hangar

CAD Construction Documents
Voice / Text : 913.638.3241
mgspencer@sbcglobal.net

Residential AutoCAD Drafting and Design Services

No.	Description	Date
1	City Comments	6/18/20

CONSTRUCTION DOCUMENTS

Project Number	2019.03
Date	2020 MAY 14
Drawn By	SP/BH
Checked By	EK/DS

M-101

Scale 3/16" = 1'-0"

HEAT PUMP CONDENSING UNIT SCHEDULE

MARK	MFGR	MODEL NO.	COOLING			ELECTRICAL			EVAP. COIL MODEL NO.	SEER	NOTES
			TOTAL BTUH	AMB.	EVAP. EAT DB/WB	VOLT/Φ/HZ	MIN. MCA (AMPS)	MIN. MOCP (AMPS)			
CU-1	LENNOX	ML-14XPI-042	42,000	95	80/67	240/1/60	24.2	40	AHU-1	14	1,2,3,4
CU-2	LENNOX	ML-14XPI-042	42,000	95	80/67	240/1/60	24.2	40	AHU-2	14	1,2,3,4

NOTES:
1. PROVIDE TIME DELAY ON COMPRESSOR RE-START, CRANKCASE HEATER, AND COMPRESSOR LOCK-OUT WITH AMBIENT BELOW 35 °F. PROVIDE INDOOR COIL WITH THERMAL EXPANSION VALVE (TXV).
2. MECHANICAL CONTRACTOR SHALL COORDINATE ALL UNIT MOCP'S OF ACTUAL INSTALLED EQUIPMENT WITH ELECTRICAL CONTRACTOR.
3. PROVIDE CONCRETE OR PRE-MANUFACTURED POLYOLEFIN PAD FOR EACH UNIT. SCREENING OF UNIT NOT ALLOWED PER FAA REQUIREMENTS.
4. PROVIDE HAIL GUARDS FOR EACH UNIT.

AIR HANDLING UNIT SCHEDULE

MARK	MFGR	MODEL NO.	CFM	E.S.P. IN. WG.	COOLING			HEATING (ELECTRIC) (RESISTANCE)		ELECTRICAL		OUTSIDE AIR (CFM)	NOTES
					TOTAL BTUH	AMB.	EVAP. EAT DB/WB	KW	STAGES	VOLT/Φ/HZ	HP		
AHU-1	LENNOX	CBA25UH-042	1,400	0.5	42,000	95	80/67	15	2	240/1/60	1	305	1,2,3,4,5,7,8
AHU-2	LENNOX	CBA25UH-042	1,400	0.5	42,000	95	80/67	15	2	240/1/60	1	285	1,2,3,4,5,6,7,8

NOTES:
1. PROVIDE 1" THICK THROWAWAY TYPE FILTER FOR EACH UNIT.
2. PROVIDE EACH UNIT WITH 7-DAY PROGRAMMABLE HEAT/COOL/AUTO CHANGEOVER THERMOSTAT.
3. CONDENSING UNITS, AND AIR HANDLING UNITS SHALL ALL BE OF THE SAME MANUFACTURER.
4. MECHANICAL CONTRACTOR SHALL COORDINATE ALL UNIT MOCP'S OF ACTUAL INSTALLED EQUIPMENT WITH ELECTRICAL CONTRACTOR.
5. EXTERNAL STATIC PRESSURE LISTED REPRESENTS STATIC PRESSURE REQUIRED FOR DUCTWORK AND DIFFUSERS OUTSIDE THE HVAC UNIT COMPLETELY INDEPENDENT OF ANY PRESSURE DROP THROUGH THE HVAC EQUIPMENT INCLUDING BUT NOT LIMITED TO FILTERS AND COILS.
6. PROVIDE GALVANIZED WATERTIGHT DRAIN PAN AND CONDENSATE FLOAT SWITCH TO DE-ENERGIZE THE AHU IF THE DRAIN PAN FILLS WITH WATER.
7. PROVIDE MANUFACTURER'S UNIT STAND FOR SIDE RETURN.
8. PROVIDE SINGLE-POINT POWER CONNECTION.

GAS FIRED UNIT HEATER SCHEDULE

MARK	MFGR	MODEL	CFM	HEATING (GAS)		ELECTRICAL		REMARKS
				BTUH INPUT	BTUH OUTPUT	VOLT/Φ/HZ	HP	
UH-1	LENNOX	LF-25-200A	2,650	200,000	166,000	120/1Φ/60	1/3	1,2,3
UH-2	LENNOX	LF-25-200A	2,650	200,000	166,000	120/1Φ/60	1/3	1,2,3

NOTES:
1. PROVIDE EACH UNIT ELECTRONIC DIRECT SPARK IGNITION & ALUMINIZED STEEL HEAT EXCHANGER.
2. PROVIDE EACH UNIT WITH UNIT MOUNTED THERMOSTAT & CONTROL VOLTAGE TRANSFORMER.
3. PROVIDE WITH PROPANE CONVERSION KIT.

EXHAUST FAN SCHEDULE

MARK	MFGR	MODEL	CFM	EXTERNAL STATIC P. IN. WG.	RPM	ELECTRICAL		FAN TYPE	CONTROLS	NOTES
						VOLT/Φ/HZ	PWR			
EF-1	COOK	GC-128	75	0.1	750	120/1/60	29 W	CEILING EXH.	SWITCH	1
EF-2	COOK	GC-128	75	0.1	750	120/1/60	29 W	CEILING EXH.	SWITCH	1
EF-3	COOK	12A17D	730	0.1	1725	120/1/60	1/4 HP	WALL PROP	SWITCH	2

NOTES:
1. PROVIDE CEILING GRILLE, INTEGRAL BACK DRAFT DAMPER, VARI-SPEED CONTROLLER (NEAR FAN AND ABOVE CEILING), AND WALL CAP.
2. PROVIDE WALL SLEEVE, REAR GUARD HOUSING, BACKDRAFT DAMPER, WEATHER HOOD, BIRD SCREEN.

MECHANICAL GENERAL NOTES:

1. COORDINATE ALL WORK WITH OTHER TRADES AND EXISTING CONDITIONS AS REQUIRED TO PROPERLY INSTALL ALL SYSTEMS AS INTENDED, WITHIN THE CONFINES OF THE SPACES AVAILABLE, AND WITHOUT INTERFERENCES.
2. THIS CONTRACTOR SHALL PERFORM ALL WORK INDICATED AND/OR AS REQUIRED FOR THE PROPER INSTALLATION AND OPERATION OF THE MECHANICAL SYSTEMS.
3. REFER TO ARCHITECTURAL REFLECTED CEILING PLANS FOR EXACT LOCATIONS OF DIFFUSERS.
4. INSTALL ALL DUCT, PIPE, ETC. AS HIGH AS POSSIBLE.
5. DUCT SIZES SHOWN ARE ACTUAL SHEET METAL SIZES AND INCLUDE AN ALLOWANCE FOR DUCT LINER WHERE APPLICABLE.
6. PROVIDE FLEXIBLE CONNECTION BETWEEN DUCTWORK AND AIR HANDLING UNITS, EXHAUST FANS, AND OTHER MOTORIZED EQUIPMENT.
7. NO DUCT SHALL BE ROUTED OVER THE TOP OF ELECTRICAL PANELS.
8. ALL MECHANICAL SYSTEMS SHALL BE BALANCED BY A CERTIFIED BALANCING CONTRACTOR. REFER TO SPECIFICATIONS FOR DETAILS.

DIFFUSER SCHEDULE

MARK	MFGR	MODEL	NECK SIZE	FACE SIZE	FINISH	NOTES
SR-1	TITUS	300RS	12"x6"	-	WHITE	W/ O.B.D.
SR-2	↓	300RS	8"x6"	-	↓	W/ O.B.D.
SR-3	↓	300RS	16"x6"	-	↓	W/ O.B.D.
TG-1	↓	350RL	14"x8"	-	↓	-
RG-1	↓	PAR/3	22"x22"	24"x24"	↓	W/ TRM

MECHANICAL SYMBOLS

	NEW SUPPLY DIFFUSER
	NEW RETURN AIR GRILLE
	EXHAUST GRILLE/FAN
T	THERMOSTAT, MOUNTED AT 48" AFF
	MOTORIZED DAMPER/LOUVER
	NEW DUCTWORK
32"x14"	SIZE OF RECTANGULAR DUCT
6"Φ	SIZE OF ROUND DUCT
	FLEXIBLE DUCTWORK
	FLEXIBLE CONNECTION TO FAN
3	FLOOR PLAN NOTE DESIGNATION
S.A.	SUPPLY AIR
R.A.	RETURN AIR
EXH.	EXHAUST AIR
	TRANSITION IN DUCT SIZE
	ELBOW WITH TURNING VANES
	MANUAL VOLUME DAMPER
	MANUAL VOLUME DAMPER
	MOTORIZED CONTROL DAMPER
	SPLITTER DAMPER WITH HORIZONTAL REGULATOR
	SUPPLY AIR DUCT UP/DOWN
	RETURN AIR DUCT UP/DOWN
	EXHAUST AIR DUCT UP/DOWN
UP	CHANGE IN ELEVATION UP (UP) DOWN (DN) IN DIRECTION OF FLOW
RTU-1	SCHEDULED MECHANICAL EQUIPMENT
FD	FIRE DAMPER 2

OUTDOOR AIR CALCULATIONS

UNIT	Area (sqft)	OCCUPANCY CLASSIFICATION	Occupant Density #/1000 sqft	People outdoor airflow rate in breathing zone, (Rp) cfm/person	Area outdoor airflow rate in breathing zone, (Ra) cfm/sqft	Exhaust airflow rate cfm/sqft	Breathing zone outdoor airflow (Vbz)	Zone air distribution effectiveness (Ez)	Zone outdoor airflow (cfm)
AHU-1		**Offices**							
	260	Conference rooms	50	5	0.06		81	0.8	101
	610	Office spaces	5	5	0.06		52	0.8	65
	480	Break Room	25	5	0.06		89	0.8	111
		Public spaces							
	350	Corridors	0	0	0.06		21	0.8	26
	60	Toilet rooms public	0	0	0	50/10	0	0.8	0
								Total	303
AHU-2		**Offices**							
	445	Conference rooms	50	5	0.06		138	0.8	172
	650	Office spaces	5	5	0.06		55	0.8	69
	60	Break Room	25	5	0.06		11	0.8	14
		Public spaces							
	350	Corridors	0	0	0.06		21	0.8	26
	60	Toilet rooms public	0	0	0	50/10	0	0.8	0
								Total	282
EF-3		**Storage**							
	9700	Warehouses	0	0	0.06		582	0.8	728
								Total	728

7/7/2020
REGISTERED PROFESSIONAL ENGINEER
STATE OF MISSOURI
ERIK B. KNUDSEN
NUMBER
PE-2004026504

Signature BUILDERS KC, LLC

Signature Builders KC, LLC
2751 NE Douglas St. - Suite R
Lee's Summit, Missouri 64064
Phone: (816) 215-0891

Website:
www.sb-kc.net

New Airplane Hangar

CAD Construction Documents
Voice / Text : 913.638.3241
mgspencer@sbcglobal.net

Residential AutoCAD Drafting and Design Services

No.	Description	Date
1	City Comments	6/18/20

CONSTRUCTION DOCUMENTS

Project Number	2019.03
Date	2020 MAY 14
Drawn By	SP/BH
Checked By	EK/DS

M-201

Scale 3/16" = 1'-0"

BC PROJECT #: 20388
MISSOURI PE COA #2009003629

This drawing has been prepared by the Engineer, or under his supervision. This drawing is provided as an instrument of service by the Designer/Engineer and is intended for use on this project only. Pursuant to the Architectural Works Copyright Protection Act of 1990, all drawings, specifications, ideas and designs, including the overall form, arrangement and composition of spaces and elements appearing herein, constitute the original, copyrighted work of the Designer/Engineer. Any reproduction, use, or disclosure of information contained herein without prior written consent of the Engineer is strictly prohibited. © 2020 BC Engineers, Inc.

BC ENGINEERS INCORPORATED
5720 Reeder Shawnee, Ks. 66203 (913)262-1772

ELECTRICAL SPECIFICATIONS

1. GENERAL PROVISIONS:
   A. PROVIDE ALL LABOR, MATERIALS, EQUIPMENT, NECESSARY FOR THE COMPLETE INSTALLATION OF THE ELECTRICAL SYSTEMS OUTLINED.
   B. OBTAIN ALL PERMITS, FEES, LICENSES, INSPECTIONS, AND CERTIFICATES OF COMPLIANCE OR APPROVAL AS REQUIRED BY THE AUTHORITIES.
   C. ALL WORK SHALL BE PERFORMED IN ACCORDANCE WITH THE LATEST APPROVED EDITION OF THE NATIONAL ELECTRIC CODE (NEC) AND ALL APPLICABLE LAWS, CODES AND REGULATIONS OF THE GOVERNMENTAL BODIES HAVING JURISDICTION OVER THE SITE.
   D. ALL TESTING REQUIRED BY AUTHORITIES SHALL BE CONSIDERED PART OF THIS WORK.
   E. DURING CONSTRUCTION, ALL FIXTURES, EQUIPMENT, CONDUIT, ETC. SHALL BE COVERED, PLUGGED, OR CAPPED AS REQUIRED TO KEEP CLEAN AND UNDAMAGED. ALL DAMAGED ITEMS SHALL BE RESTORED TO ORIGINAL CONDITION OR REPLACED. ALL PROTECTIVE COVERING SHALL BE REMOVED BEFORE FINAL ACCEPTANCE.
   F. PROVIDE ALL NECESSARY CUTTING AND PATCHING OF WALLS, FLOORS, CEILINGS, AND ROOFS AS NECESSARY. PATCH AROUND ALL OPENINGS SHALL MATCH ADJACENT AREA. COORDINATE ALL ROOFING WORK WITH OWNER OR RESPONSIBLE PARTY, SO THAT THE EXISTING ROOFING WARRANTY WILL BE MAINTAINED.
   G. CONTRACTOR SHALL GUARANTEE ALL WORK AND MATERIALS AGAINST DEFECTS FOR A PERIOD OF ONE YEAR FROM FINAL ACCEPTANCE.
   H. CONTRACTOR SHALL PROVIDE ACCESS PANELS WHERE NECESSARY FOR CONCEALED ELECTRIAL COMPONENTS.
2. OPERATION AND MAINTENANCE MANUALS:
   A. DURING THE COURSE OF CONSTRUCTION, COLLECT AND COMPILE OPERATING INSTRUCTIONS, WIRING DIAGRAMS, CATALOG CUTS, LUBRICATION AND PREVENTIVE MAINTENANCE INSTRUCTIONS, PARTS LISTS, ETC. FOR ALL EQUIPMENT FURNISHED UNDER THIS CONTRACT.
   B. ALL LITERATURE AND INSTRUCTIONS SHIPPED WITH THE EQUIPMENT SHALL BE SAVED FOR INCLUSION IN THE OPERATION AND MAINTENANCE MANUALS.
   C. ALL LITERATURE LISTED ABOVE AND ALL PAPERS LISTING WARRANTIES, ETC. SHALL BE COLLATED AND LABELED WITH THE PROJECT NAME, ADDRESS, ARCHITECT, ENGINEER, CONTRACTORS, ETC. CONTRACTORS, ETC. DOCUMENTS SHALL BE COMPILED AND BOUND IN DIGITAL FILE OR 3 RING BINDER.
3. MANUFACTURERS:
   A. MANUFACTURERS, MODEL NUMBERS, ETC. INDICATED OR SCHEDULED ON THE DRAWINGS SHALL BE INTERPRETED AS HAVING ESTABLISHED A STANDARD OF QUALITY AND SHALL NOT BE CONSTRUED AS LIMITING COMPETITION. ARTICLES, FIXTURES, ETC. OF EQUAL QUALITY BY MANUFACTURERS SHALL BE ACCEPTABLE, SUBJECT TO STRUCTURAL AND ELECTRICAL CONSTRAINTS OF THE PROJECT DESIGN, UNLESS NOTED OTHERWISE.
4. TESTING, AND BALANCING:
   A. ALL CIRCUITS SHALL BE TESTED FOR CONTINUITY, SHORTS, AND GROUNDS BEFORE CONNECTING TO THE PROPER PHASE AS DESIGNED TO BALANCE THE LOADING BETWEEN PHASES.
   B. POWER AND LIGHTING PANELS SHALL BE PROPERLY PHASED TO DISTRIBUTE THE LOAD AND SHALL BE CONNECTED AND ADJUSTED TO OPERATE AS SPECIFIED.
   C. ALL MOTORS AND SIMILAR EQUIPMENT SHALL BE CHECKED FOR PROPER PHASE ROTATION AND OPERATION.
5. RACEWAYS:
   A. CONDUIT INSIDE THE BUILDING SHALL BE METALLIC TUBING (EMT), BEARING THE UL LABEL, WITH COMPRESSION TYPE FITTINGS OR SCREW SET FITTINGS.
   B. CONDUIT EXPOSED TO THE WEATHER, INSTALLED UNDERGROUND, IN CONCRETE, OR USED FOR SERVICE ENTRANCE SHALL BE STANDARD RIGID CONDUIT (GALVANIZED) WITH THREADED FITTINGS.
   C. UNDERGROUND CONDUIT MAY BE POLYVINYL CHLORIDE WITH A DEFLECTION TEMPERATURE, UNDER LOAD AT 264 PSI, OF 70 DEGREES C, AND A TENSILE STRENGTH OF 5,200 PSI. JOINTS SHALL BE FLUSH SOLVENT WELDED IN ACCORDANCE WITH THE MANUFACTURER'S INSTRUCTIONS. CONDUIT SHALL BE EQUAL TO CARLON POWER AND COMMUNICATIONS DUCT TYPE DB (DIRECT BURIAL). CONDUIT AND FITTINGS SHALL BE PRODUCED BY THE SAME MANUFACTURER.
   D. FLEXIBLE METAL CONDUIT SHALL ONLY BE USED FOR CONNECTIONS TO MOTORS, TRANSFORMERS, AND LIGHT FIXTURES. MAXIMUM LENGTH SHALL BE 6'-0".
6. CONDUCTORS:
   A. WIRES SHALL BE CONTINUOUS WITHOUT SPLICES OR TAPS IN CONDUIT RUNS. ALL SPLICES SHALL BE MADE IN JUNCTION, PULL, OR OUTLET BOXES. ALL WIRE SHALL BE INSTALLED IN CONDUIT, WIREWAYS, OR OTHER PROTECTIVE COVER SANCTIONED BY CODES.
   B. CONDUCTORS FOR LIGHTING AND POWER SHALL BE COPPER, MINIMUM NO. 12 A.W.G., 600 VOLT.
   C. NO. 10 GAUGE AND SMALLER CONDUCTORS SHALL BE TYPE THWN (WET LOCATIONS) OR THHN (DRY LOCATIONS), SOLID CONDUCTOR, UNLESS OTHERWISE INDICATED.
   D. NO. 8 GAUGE AND LARGER CONDUCTORS SHALL BE TYPE THWN (WET LOCATIONS) OR THHN (DRY LOCATIONS), STRANDED, UNLESS OTHERWISE INDICATED.
   E. SERVICE ENTRANCE AND PANEL FEEDER CONDUCTORS, NO. 3 GAUGE AND LARGER SHALL BE TYPE XHHW-2 (WET LOCATIONS) OR THHN (DRY LOCATIONS), STRANDED COPPER, UNLESS OTHERWISE INDICATED.
7. MC CABLE:
   A. MC CABLE SHALL CONSIST OF INTERLOCK ARMORED CABLE MADE OF THREE OR FOUR TYPE THHN SOLID (10 AWG AND LARGER MAY BE STRANDED) COPPER CONDUCTORS RATED 90°C FOR DRY LOCATIONS, WITH NYLON OR EQUIVALENT UL LISTED JACKET, PER UL STANDARD 83 THE THREE CONDUCTORS SHALL BE TWISTED TOGETHER WITH THE COPPER GROUNDING CONDUCTOR, SUITABLE FILLERS, AND WRAPPED IN BINDER TAPE. THE ASSEMBLY SHALL BE ARMORED WITH SPIRALLY WRAPPED INTERLOCKED ARMOR OF ALUMINUM OR GALVANIZED STEEL.
   B. CABLES SHALL BE TESTED IN ACCORDANCE WITH UL STANDARD 1569 FOR TYPE MC CABLE AND RATED AT 600 VOLTS, 90 DEG. C FOR DRY LOCATIONS AND 75 DEG. C FOR WET LOCATIONS.
8. WIRING DEVICES:
   A. WALL SWITCHES SHALL BE SPECIFICATION GRADE, QUIET TYPE, FLUSH TOGGLE SWITCH, RATED FOR 20 AMPS, WITH THERMOPLASTIC COVER PLATES.
      1) SINGLE POLE: HUBBELL #CS1221-X, OR EQUAL.
      2) THREE WAY: HUBBELL #CS1223-X, OR EQUAL.
   B. RECEPTACLES SHALL BE SPECIFICATION GRADE, DUPLEX, GROUNDING, THREE-WIRE TYPE, RATED FOR 20 AMPS, WITH THERMOPLASTIC COVER PLATES. HUBBELL #CR5352-X, OR EQUAL.
   C. GROUND FAULT INTERRUPTER RECEPTACLES (GFI) SHALL BE HUBBELL #GF20-XL. DEVICE COVER PLATES SHALL BE AS HEREINBEFORE SPECIFIED.
   D. ISOLATED GROUND RECEPTACLES (IG) SHALL BE HUBBELL #CR5352IG, ORANGE COLOR. DEVICE COVER PLATES SHALL BE AS HEREINBEFORE SPECIFIED.
   E. RECEPTACLES OUTSIDE BUILDING AND WHERE NOTED AS WEATHERPROOF, SHALL BE LISTED WEATHER-RESISTANT HUBBELL #GFTR20-X OR EQUAL AND SHALL BE INSTALLED IN A WEATHERPROOF ENCLOSURE WHICH SHALL BE INTERMATIC #WP1012MKD OR #WP1010HMKD DIECAST METAL WEATHERPROOF RECEPTACLE COVER. COVER SHALL BE WEATHER PROOF RATED WHILE IN USE.
   F. VERIFY DEVICES AND DEVICE COVERPLATES COLOR AND STYLE WITH ARCHITECT.
9. BOXES:
   A. HOT DIPPED GALVANIZED STEEL BOXES. PROVIDE TYPE TO SUIT CONDITIONS FOR INSTALLATION.
   B. ALL BOXES SHALL BE FLUSH MOUNTED, UNLESS INDICATED OTHERWISE.
10. PANELBOARDS:
   A. FURNISH AND INSTALL CIRCUIT BREAKER PANELBOARDS AS SHOWN ON THE DRAWINGS. PANELBOARDS SHALL BE LISTED BY UL AND SO LABELED, AND SHALL BE FULLY RATED FOR THE VOLTAGE AND CURRENT CAPACITY INDICATED ON THE PANEL SCHEDULE. PANELBOARDS SHALL BE EQUAL TO SQUARE D TYPE NQ OR NF WITH BOLT IN TYPE BREAKERS. PANELBOARD LUGS SHALL BE RATED AT 75°C.
      1) CIRCUIT BREAKER INTERRUPTING CAPACITIES SHALL MEET OR EXCEED THE AVAILABLE RMS SYMMETRICAL FAULT CURRENTS INDICATED AND AS REQUIRED TO MEET OR EXCEED THE AVAILABLE FAULT CURRENT FROM LOCAL UTILITY.
   B. CIRCUIT BREAKERS SHALL MEET APPLICABLE PORTIONS OF UL STANDARD 489 AND NEMA AB-1. CIRCUIT BREAKERS SHALL BE BOLT-ON, GROUP MOUNTED, AMBIENT MAGNETIC, WITH COMMON TRIP, UL RATED TO CARRY 80% OF NAMEPLATE RATING CONTINUOUSLY IN FREE AIR AT 40° C. CIRCUIT BREAKERS SHALL BE TRIP INDICATING AND FULLY INTERCHANGEABLE WITHOUT DISTURBING ADJACENT UNITS. WIRE TERMINALS SHALL BE RATED 75 DEGREES C. THE OPERATING MECHANISM SHALL BE TRUP-FREE SO THAT CONTACTS CANNOT BE HELD CLOSED AGAINST ANY ABNORMAL OVERCURRENT OR SHORT CIRCUIT CONDITION.
      a) BREAKERS SHALL MEET APPLICABLE NEMA AND/OR UL SPECIFICATIONS.
   C. PANELBOARD BOXES SHALL BE GALVANIZED SHEET STEEL WITH AMPLE WIRING GUTTER SPACE IN ACCORDANCE WITH NEC. FRONTS SHALL BE OF SHEET STEEL PAINTED LIGHT GREY OVER A SUITABLE RUST INHIBITOR PRIMER. PANELBOARDS SHALL BE EQUIPPED WITH ONE PIECE DOOR, CYLINDER TUMBLER TYPE LOCK, DIRECTORY CARD-HOLDER AND QUARTER-TURN ADJUSTABLE TRIM CLAMPS.
   D. PANELBOARD INTERIORS SHALL CONSIST OF REINFORCED GALVANIZED SHEET STEEL FRAMES WITH ALUMINUM BUS BARS AND CIRCUIT BREAKERS, PROPERLY SUPPORTED TO PREVENT VIBRATIONS AND BREAKAGE IN HANDLING. BUS BARS SHALL BE SEQUENCE PHASED. PANELBOARD SHALL HAVE A FULL SIZED SOLID ALUMINUM NEUTRAL AND GROUND BUS.
   E. BUS BAR BRACING SHALL BE UL LISTED AS INDICATED ON DRAWINGS. ADDITIONAL BRACING SHALL BE PROVIDED AS REQUIRED TO MEET OR EXCEED INDICATED AVAILABLE FAULT CURRENTS.
   F. DIRECTORY CARDS SHALL BE COMPLETELY FILLED IN BY TYPEWRITER, LISTING CIRCUIT NUMBERS AND LOAD SERVED, INCLUDING EXISTING CIRCUITS. CIRCUIT BREAKERS SHALL BE IDENTIFIED BY CIRCUIT NUMBER LABELS AS HEREINBEFORE SPECIFIED.
11. DISCONNECTS:
   A. DISCONNECTS SHALL BE EXTERNALLY OPERATED, QUICK-MAKE, QUICK-BREAK, SAFETY, WITH PROVISIONS FOR PAD LOCKING. FUSED AND NON-FUSED DISCONNECT SWITCHES SHALL BE PROVIDED AS INDICATED.
   B. INDOOR SWITCHES SHALL BE NEMA 1 AND OUTDOOR SWITCHES SHALL BE NEMA 3R, UNLESS INDICATED OTHERWISE.

ELECTRICAL SPECIFICATIONS (CONTINUED)

12. FUSES:
   A. FUSES PROTECTING CIRCUIT BREAKER PANELS SHALL BE CURRENT LIMITING U.L. CLASS RK-1 FUSES WITH 200,000 AMPERES RMS SYM INTERRUPTING CAPACITY. FUSING ELEMENTS SHALL BE SILVER FOR RATINGS ABOVE 60 AMPERES.
   B. ALL OTHER FUSES SHALL BE U.L. CLASS RK-5, DUAL-ELEMENT WITH A MINIMUM TIME-DELAY OF 10 SECONDS AT 500% RATING. FUSES SHALL HAVE CURRENT-LIMITING SHORT-CIRCUIT LINKS AND 200,000 AMPERES RMS SYM INTERRUPTING CAPACITY. FUSING ELEMENTS SHALL BE COPPER.
13. LIGHT FIXTURES:
   A. WHERE LIGHT FIXTURES ARE MOUNTED IN A LAY-IN CEILING, PROVIDE A MINIMUM OF 2 SUPPORT WIRES ATTACHED DIRECTLY BETWEEN EACH LIGHT FIXTURE AND THE BUILDING STRUCTURE. SUPPORT WIRES SHALL BE A MINIMUM OF 12 GAUGE GALVANIZED STEEL WIRE, SOFT ANNEALED.
   B. FIXTURES ARE REQUIRED AT ALL LIGHTING OUTLETS SHOWN ON THE DRAWINGS. APPROVED LIGHTING FIXTURE WIRE IS REQUIRED IN ALL FIXTURES AND FIXTURE RACEWAYS. WEATHERPROOF WIRING IS REQUIRED FOR EXTERIOR FIXTURES. ALL PARTS OF FIXTURES AND WIRING SHALL BE IN ACCORDANCE WITH NEC REQUIREMENTS.
   C. ALL FIXTURES SHALL CARRY UL AND ETL LABELS.
14. SLEEVES:
   A. PROVIDE, SET, AND PROPERLY LOCATE PIPE SLEEVES AS REQUIRED FOR THIS WORK.
   B. INTERIOR PARTITIONS: 16 GAGE GALVANIZED STEEL. PACK BETWEEN CONDUIT AND SLEEVE WITH FIRE SAFING AND CAULK AT EACH END WITH FIRE RESISTANT SEALANT.
   C. ROOF: PROSET OR EQUAL, MANUFACTURED PVC SCHEDULE 40 PIPE SLEEVE WITH WEATHERPROOF SEAL. COORDINATE WITH ROOFING CONTRACTOR AND FLASH AS REQUIRED TO MAINTAIN ROOF WARRANTY.
15. GROUNDING:
   A. GROUND ALL ELECTRICAL APPARATUS IN ACCORDANCE WITH THE NATIONAL ELECTRIC CODE (NEC) 250, AND ANY LOCAL REQUIREMENTS. INSURE CONTINUOUS BOND WHERE FLEXIBLE CONDUIT IS USED. PROVIDE BONDING JUMPER INSIDE ALL FLEXIBLE CONDUIT.
   B. BOND METAL PIPING SYSTEMS IN COMPLIANCE WITH NEC 250.4(A)(4).
16. BOXES IN FIRE RATED ASSEMBLIES:
   A. OUTLET BOXES THAT DO NOT EXCEED 16 SQUARE INCHES AND INSTALLED IN FIRE RATED WALLS SHALL NOT BE INSTALLED CLOSER THAN 24" HORIZONTAL INCHES TO OTHER OUTLET BOXES.
   B. IF BOXES MUST BE INSTALLED WITHIN 24" OF EACH OTHER THAN BOTH OUTLET BOXES SHALL BE PROTECTED WITH LISTED PUTTY PADS, 3M FIRE BARRIER MOLDABLE PUTTY + OR EQUAL.

ELECTRICAL SYMBOLS LIST

CIRCUITING & NOTES	
+48"	SPECIAL MOUNTING HEIGHT FOR ASSOCIATED DEVICE (CENTERLINE OF DEVICE)
GFI	GROUND FAULT CIRCUIT INTERRUPTER DEVICE
WP	WEATHERPROOF ENCLOSURE ON DEVICE
WR	WEATHERPROOF RESISTANT DEVICE
X	ELECTRICAL FLOOR PLAN NOTE WITH DESIGNATION
2 LP	CONDUIT CONCEALED WHERE POSSIBLE OR AS NOTED, ARROWS INDICATE HOME RUN TO PANEL. CIRCUIT NUMBERS INDICATED
	#12 WIRE IN CONDUIT, UNLESS NOTED OTHERWISE ON DRAWINGS OR SPECIFICATION
	GROUNDING CONDUCTOR, #12 WIRE UNLESS NOTED OTHERWISE ON DRAWINGS OR SPECIFICATION
	CONDUIT ROUTED UNDER FLOOR/GRADE
LIGHTING	
	EMERGENCY TWIN HEAD LIGHT FIXTURE
	EXIT LIGHT WITH DIRECTIONAL ARROWS INDICATED
A	STRIP FIXTURE WITH TYPE DESIGNATION
A	RECESSED OR SURFACE MOUNTED FIXTURE WITH TYPE DESIGNATION
NL A	NIGHT LIGHT, CONNECT TO UNSWITCHED CIRCUIT
A	CEILING OR RECESSED FIXTURE WITH TYPE DESIGNATION
A	WALL MOUNTED FIXTURE WITH TYPE DESIGNATION
POWER DEVICES	
	DUPLEX RECEPTACLE, BOTTOM OF BOX AT 16" AFF, UNLESS NOTED OTHERWISE
	FOURPLEX RECEPTACLE, BOTTOM OF BOX AT 16" AFF, UNLESS NOTED OTHERWISE
	DEVICE MOUNTED ABOVE COUNTER AND/OR SPLASH GUARD
	HEAVY DUTY OUTLET - NEMA CONFIGURATION SIZE PER EQUIPMENT MANUFACTURER'S RECOMMENDATION
	PANEL BOARD, TOP OF BOX 6'-0" AFF
J	JUNCTION BOX
	NON-FUSED DISCONNECT SWITCH
	FUSED DISCONNECT SWITCH
	MOTOR WITH DESIGNATION
CONTROLS	
S	SINGLE POLE WALL SWITCH, TOP OF BOX AT 48" AFF
S_2	TWO POLE WALL SWITCH, TOP OF BOX AT 48" AFF
S_3	THREE-WAY WALL SWITCH, TOP OF BOX AT 48" AFF
S_4	FOUR-WAY WALL SWITCH, TOP OF BOX AT 48" AFF
S_m	MANUAL MOTOR STARTER WITH OVERLOADS
COMMUNICATIONS	
	DATA/TELEPHONE OUTLET WITH MINIMUM ¾" CONDUIT STUBBED UP TO ABOVE ACCESSIBLE CEILING, BOTTOM OF BOX AT 16", UNLESS NOTED OTHERWISE. PROVIDE WITH PULL STRING
MISCELLANEOUS	
SD	120V AUDIBLE BASE CEILING MOUNT SMOKE DETECTOR. WIRE TO CIRCUIT P-18 WITH #12AWG.

LIGHT FIXTURE SCHEDULE

MARK NO.	MANUFACTURER & CATALOG NUMBER	VOLTS WATTS	LIGHT SOURCE	DESCRIPTION
A	8' LED FIXTURE	120 150	LED	8' LED FIXTURE IN HANGER. VERIFY MOUNTING WITH OWNER/ARCHITECT.
B	8' LED FIXTURE	120 150	LED	8' LED FIXTURE IN HANGER. VERIFY MOUNTING WITH OWNER/ARCHITECT.
C	WALL MOUNTED FIXTURE	120 50	LED	EXTERIOR RATED EXTERIOR FIXTURE. VERIFY LOCATION WITH OWNER/ARCHITECT.
D	WALL MOUNTED FIXTURE	120 25	LED	WALL MOUNTED FIXTURE FOR STORAGE UNDER STAIRS.
F	WALL MOUNTED FIXTURE	120 25	LED	WALL MOUNTED FIXTURE ABOVE VANITY MIRROR IN RESTROOM.
R	6" IC RATED LED CAN	120 20	LED	6" IC RATED LED CAN
WP	EXTERIOR WALL PACK	120 75	LED	EXTERIOR WALL PACK WITH INTEGRAL PHOTOCELL. VERIFY EXACT LOCATION WITH OWNER/ARCHITECT
E	WALL MOUNTED EMERGENCY LIGHT	120 1	INCL	EMERGENCY LIGHT WITH TWIN ADJUSTABLE LED HEADS AND BATTERY, MOUNT AT 7'-6"±, TO CLEAR OBSTACLES.
	WALL MOUNTED COMBINEATION EXIT/EMERGENCY LIGHT	120 3	INCL	COMBINATION EMERGENCY/EXIT LIGHT WITH LED LAMPS, RED LETTERS ON WHITE BACKGROUND, TWIN LED EMERGENCY LIGHT HEADS, UNIVERSAL MOUNT, BATTERY BACKUP
	WALL MOUNTED COMBINEATION EXIT/EMERGENCY LIGHT AND REMOTE TWIN HEAD EMERGENCY LIGHT	120 5	INCL	COMBINATION EMERGENCY/EXIT LIGHT WITH LED LAMPS, RED LETTERS ON WHITE BACKGROUND, TWIN EMERGENCY LIGHT HEADS, UNIVERSAL MOUNT, HIGH CAPACITY BATTERY BACKUP AND REMOTE TWIN HEAD OUTDOOR RATED FIXTURE

PANEL: P	VOLTS: 120/208V	PH: 3Ø	WIRE: 4W	LOCATION: HANGER	MOUNTING: SURFACE
BUS: 400A	MAIN: 400A MCB	IC: 22,000 RMS SYM AMPS			FEEDER: SEE RISER DIAGRAM

CKT	DESCRIPTION	AMPS	POLE	WIRE	ØA	ØB	ØC	ØA	ØB	ØC	WIRE	POLE	AMPS	DESCRIPTION	CKT NO
1	EWH-1	100	2	3	9,000			840			12	1	20	UH-1	2
3						9,000			840		10	1	20	UH-2	4
5	EWH-2	100	2	3			9,000			7,020	4	2	70	AHU-1	6
7					9,000			7,020							8
9	CU-1	40	2	6		2,600			7,020		4	2	70	AHU-2	10
11							2,600			7,020					12
13	CU-2	40	2	6	2,600			696			12	1	20	EF-3	14
15						2,600			1,000		10	1	20	EXT LTS	16
17	OVERHEAD DOOR	20	2	10			1,200			500	12	1	20	SMOKE DECTECTORS [HL]	18
19					1,200			720			12	1	20	MAIN FLR GEN/RR RECS	20
21	HANGER QUAD	20	1	10		360			1,000		12	1	20	MAIN FLR COUNTER/DISP [GFI]	22
23	HANGER QUAD	20	1	10			360			1,500	10	1	20	MAIN FLR MICROWAVE [GFI]	24
25	HANGER QUAD	20	1	10	360			1,500			10	1	20	MAIN FLR MICROWAVE [GFI]	26
27	HANGER QUAD	20	1	10		360			1,440		10	1	20	MAIN FLR OFFICE RECS	28
29	HANGER QUAD	20	1	10			360			1,440	8	1	20	MAIN FLR OFFICE RECS	30
31	HANGER QUAD	20	1	10	360			1,440			8	1	20	MAIN FLR OFFICE RECS	32
33	HANGER QUAD	20	1	10		360			1,440		8	1	20	MAIN FLR OFFICE RECS	34
35	EXT REC	20	1	12			180			900	12	1	20	UPPER FLR GEN/RR RECS	36
37	SPARE	20	1					1,500			10	1	20	UPPER FLR MICROWAVE [GFI]	38
39	OFFICE LTS	20	1	12		1,315			1,500		10	1	20	UPPER FLR MICROWAVE [GFI]	40
41	HANGER LTS	20	1	12			1,650			1,260	10	1	20	UPPER FLR OFFICE RECS	42
43	SPARE	20	1					1,260			10	1	20	UPPER FLR OFFICE RECS	44
45	SPARE	20	1						1,260		8	1	20	UPPER FLR OFFICE RECS	46
47	SPARE	20	1							1,260	8	1	20	UPPER FLR OFFICE RECS	48
49	BUSSED SPACE											1	20	SPARE	50
51	BUSSED SPACE											1	20	SPARE	52
53	BUSSED SPACE											1	20	SPARE	54
55	BUSSED SPACE													BUSSED SPACE	56
57	BUSSED SPACE													BUSSED SPACE	58
59	BUSSED SPACE													BUSSED SPACE	60
NOTES:					22,520	16,515	15,350	14,916	15,500	20,900					
[HL]-HANDLE LOCK, [GFI]-GFCI BRKR 5mA					37,496		32,095		36,250					TOTAL CONNECTED LOAD:	105,841 VA
														NEC DEMAND LOAD:	104,772 VA
														DEMAND AMPS @ 208 VOLT / 3Ø:	290.82 A

ELECTRICAL GENERAL NOTES:

1. COORDINATE ALL WORK WITH OTHER TRADES AND EXISTING CONDITIONS AS REQUIRED TO PROPERLY INSTALL ALL SYSTEMS AS INTENDED, WITHIN THE CONFINES OF THE SPACES AVAILABLE, AND WITHOUT INTERFERENCES.
2. IT IS THE ELECTRICAL CONTRACTORS RESPONSIBILITY TO PROPERLY BALANCE ALL BRANCH CIRCUITS BETWEEN THE PHASES OF THE SYSTEM REGARDLESS OF CIRCUITING INDICATED.
3. ALL EXPOSED RACEWAYS SHALL BE EMT CONDUIT, MC CABLE IS NOT PERMITTED IN EXPOSED AREAS.
4. ELECTRICAL CONTRACTOR TO COORDINATE MANUFACTURER ELECTRICAL REQUIREMENTS FOR HVAC EQUIPMENT BEING FURNISHED WITH MECHANICAL CONTRACTOR PRIOR TO ROUGH-IN. EQUIPMENT DISCONNECTS TO BE PROVIDED BY ELECTRICAL CONTRACTOR UNLESS NOTED OTHERWISE IN MECHANICAL SCHEDULES.
5. REFER TO ARCHITECTURAL DRAWINGS FOR EXACT LOCATION OF LIGHT FIXTURES AND DEVICES.
6. REFER TO ARCHITECTURAL & STRUCTURAL DRAWINGS FOR REQUIREMENTS FOR SUPPORTING TRANSFORMERS, EQUIPMENT, ETC. FROM THE STRUCTURE. PROVIDE ADDITIONAL STEEL AS REQUIRED TO PROPERLY SUPPORT SYSTEMS FROM THE STRUCTURE.
7. ALL MATERIALS EXPOSED WITHIN PLENUMS SHALL BE NONCOMBUSTIBLE OR SHALL HAVE A FLAME SPREAD INDEX OF NOT MORE THAN 25 AND A SMOKE-DEVELOPED INDEX OF NOT MORE THAN 50 WHEN TESTED IN ACCORDANCE WITH ASTM E 84.
8. EACH BRANCH CIRCUIT SHALL HAVE A DEDICATED NEUTRAL PER NEC 210.4.
9. ALL BRANCH CIRCUITS SHALL BE SIZED TO ALLOW FOR A MAXIMUM OF 3% VOLTAGE DROP. ALL FEEDERS SHALL BE SIZED TO ALLOW FOR A MAXIMUM OF 2% VOLTAGE DROP. ELECTRICAL CONTRACTOR SHALL VERIFY WIRING INDICATED IS SUFFICIENT AND INCREASE CONDUCTOR SIZE AS REQUIRED BASED OFF ACTUAL INSTALLED LENGTH OF CONDUCTORS.
10. REFER TO ELECTRICAL SCOPE OF WORK ON SHEET A102 FOR MORE INFORMATION.
11. ALL WIRING SHALL BE IN ACCORDANCE WITH 2017 NEC ARTICLE 513 FOR AIRCRAFT HANGARS.

1

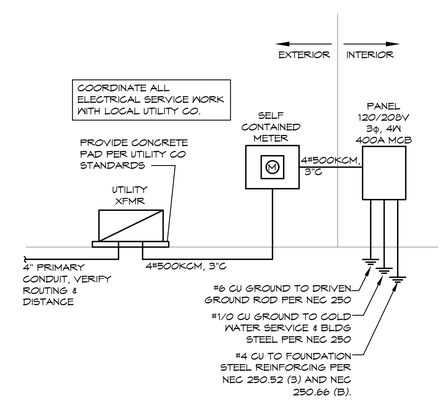

ELECTRICAL RISER DIAGRAM
SCALE: NONE

BC PROJECT #: 20388
MISSOURI PE COA #2009003629

This drawing has been prepared by the Engineer, or under his supervision. This drawing is provided as an instrument of service by the Designer/Engineer and is intended for use on this project only. Pursuant to the Architectural Works Copyright Protection Act of 1990, all drawings, specifications, ideas and designs, including the overall form, arrangement and composition of spaces and elements appearing herein, constitute the original, copyrighted work of the Designer/Engineer. Any reproduction, use, or disclosure of information contained herein without prior written consent of the Engineer is strictly prohibited. © 2020 BC Engineers, Inc.

BC ENGINEERS INCORPORATED
5720 Reeder Shawnee, Ks. 66203 (913)262-1772

6/18/2020
STATE OF MISSOURI
BRETT M. HERMANN
NUMBER PE-2018035615
REGISTERED PROFESSIONAL ENGINEER

Signature BUILDERS KC, LLC
Signature Builders KC, LLC
2751 NE Douglas St. - Suite R
Lee's Summit, Missouri 64064
Phone: (816) 215-0891

Website:
www.sb-kc.net

New Airplane Hangar

CAD Construction Documents
Voice / Text : 913.638.3241
mgspencer@sbcglobal.net

Residential AutoCAD Drafting and Design Services

No.	Description	Date
1	City Comments	6/18/20

CONSTRUCTION DOCUMENTS

Project Number	2019.03
Date	2020 MAY 14
Drawn By	SP/BH
Checked By	EK/DS

E-000

Scale 3/16" = 1'-0"

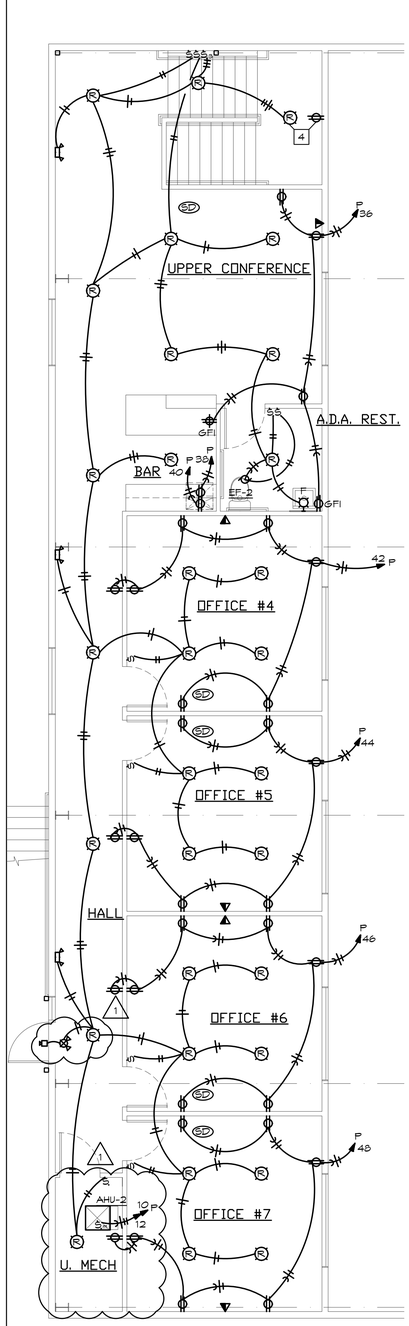

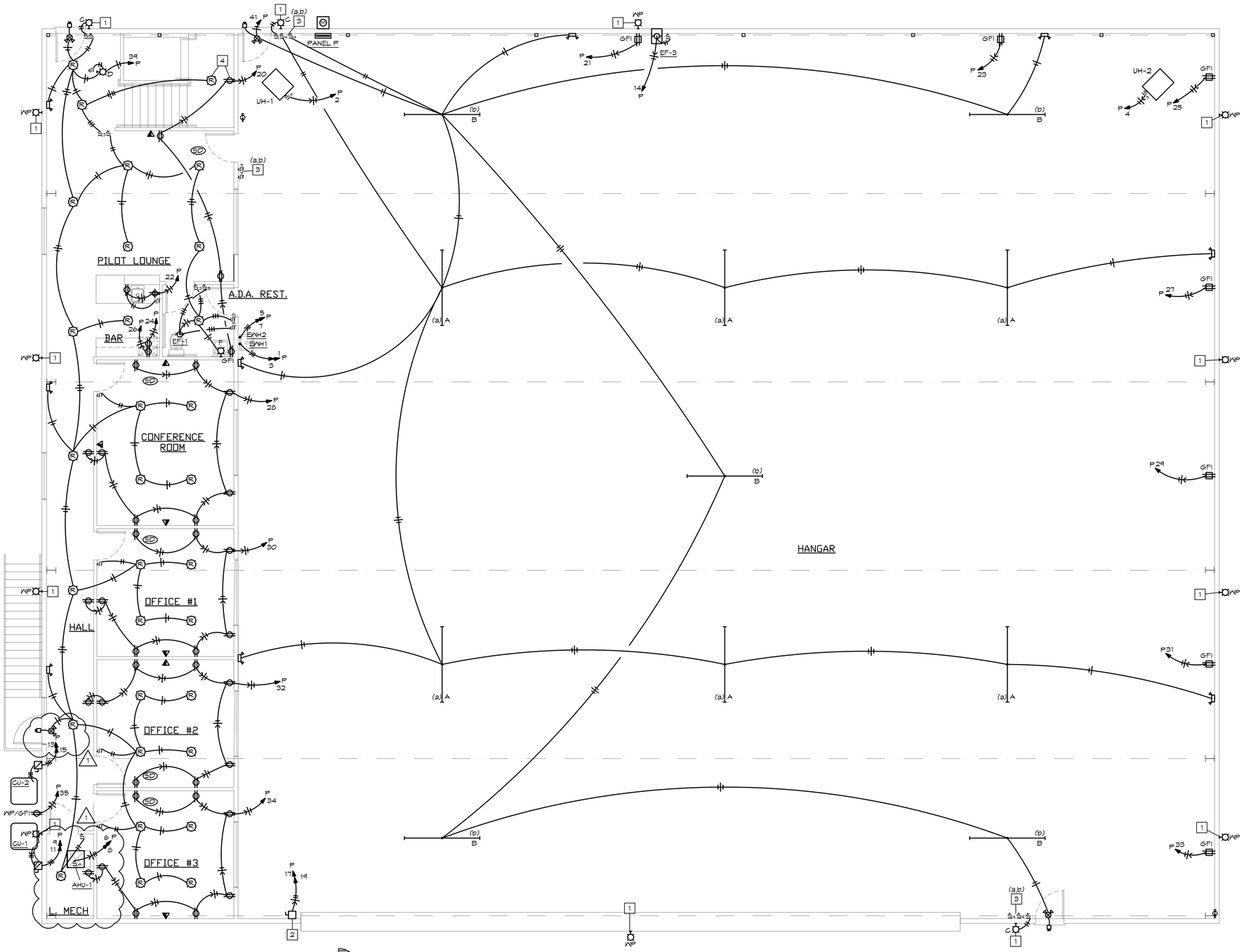

NORTH

UPPER FLOOR ELECTRICAL PLAN

SCALE: 3/16" = 1'-0"

ELECTRICAL PLAN NOTES:

1. CONNECT EXTERIOR LIGHT TO CIRCUIT P-16 WITH #10AWG.
2. CONNECT TO OVERHEAD DOOR OPERATOR PER MANUFACTURERS INSTRUCTIONS. INSTALL COMPLETE. VERIFY EXACT LOCATION AND ELECTRICAL REQUIREMENTS.
3. MAKE CONNECTION BETWEEN 3-WAY/4-WAY SWITCHES CONTROLLING HANGER LIGHTS AS INDICATED BY (a,b).
4. LIGHT FIXTURE AND RECEPTACLE SHOWN ON BOTH MAIN FLOOR AND UPPER FLOOR PLAN.

NORTH

MAIN FLOOR ELECTRICAL PLAN

SCALE: 3/16" = 1'-0"

BC PROJECT #: 20388
MISSOURI PE COA #2009003629

This drawing has been prepared by the Engineer, or under his supervision. This drawing is provided as an instrument of service by the Designer/Engineer and is intended for use on this project only. Pursuant to the Architectural Works Copyright Protection Act of 1990, all drawings, specifications, ideas and designs, including the overall form, arrangement and composition of spaces and elements appearing herein, constitute the original, copyrighted work of the Designer/Engineer. Any reproduction, use, or disclosure of information contained herein without prior written consent of the Engineer is strictly prohibited. © 2020 BC Engineers, Inc.

BC ENGINEERS INCORPORATED
5720 Reeder Shawnee, Ks. 66203 (913)262-1772

6/18/2020

STATE OF MISSOURI
BRETT M. HERMANN
NUMBER PE-2018035615
REGISTERED PROFESSIONAL ENGINEER

Signature BUILDERS KC, LLC

Signature Builders KC, LLC
2751 NE Douglas St. - Suite R
Lee's Summit, Missouri 64064
Phone: (816) 215-0891

Website:
www.sb-kc.net

New Airplane Hangar

CAD Construction Documents
Voice / Text : 913.638.3241
mgspencer@sbcglobal.net

Residential AutoCAD Drafting and Design Services

No.	Description	Date
1	City Comments	6/18/20

CONSTRUCTION DOCUMENTS

Project Number	2019.03
Date	2020 MAY 14
Drawn By	SP/BH
Checked By	EK/DS

E-100

Scale 3/16" = 1'-0"