KEYNOTES	
CODE	DESCRIPTION
1	CONCRETE INLET; CONCRETE SHALL DEVELOP A COMPRESSIVE STRENGTH OF 3500 PSI AT 28 DAYS CURE; REINFORCE WITH NO. 4 BARS, GRADE 60 STEEL, SPACED 12" O.C. EACH WAY; A CAST-IN-PLACE BOX OF EQUAL DIMENSIONS IS ACCEPTABLE; ADJUST STRUCTURE DIMENSIONS AS REQUIRED TO RECEIVE STORM PIPE AT OBLIQUE ANGLES
2	BRICK ADJUSTMENT COURSES
3	TOP OF CASTIG LOCATION FOR ELEVATIONS AND COORDINATES
4	FRAME AND GRATE SHALL BE NEENAH MODEL NO. 3295-2 OR APPROVED EQUAL; (CASTING FOR CURB AND GUTTER SHOWN); PROVIDE REDUCER RING TO ACCOMMODAE THE PROPOSED CASTING IF REQUIRED
5	TOP OF CURB
6	CAST IRON LINTEL; 1"x6"x38"; APPROX. 70 LB. WEIGHT
7	1:16 MINIMUM SLOPE; GROUT INVERT
8	BACK OF CURB

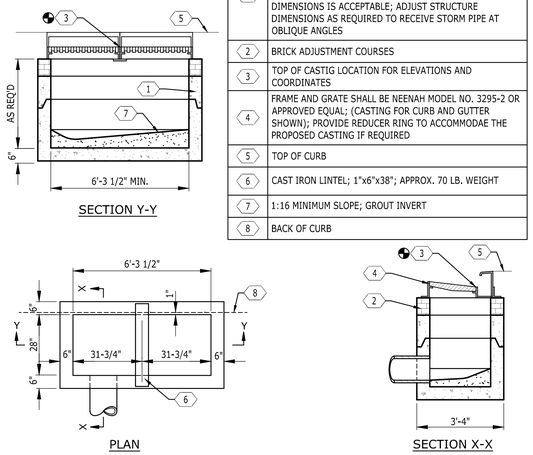

5 DOUBLE CURB INLET

NOT TO SCALE

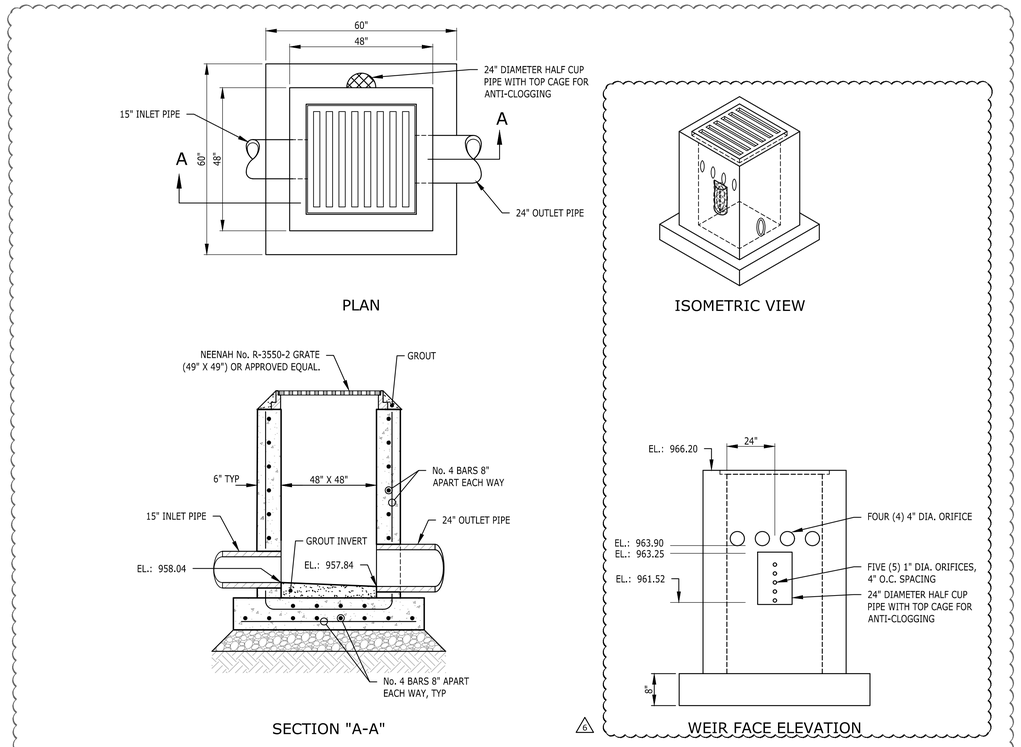

3 POND OUTLET STRUCTURE

NO SCALE

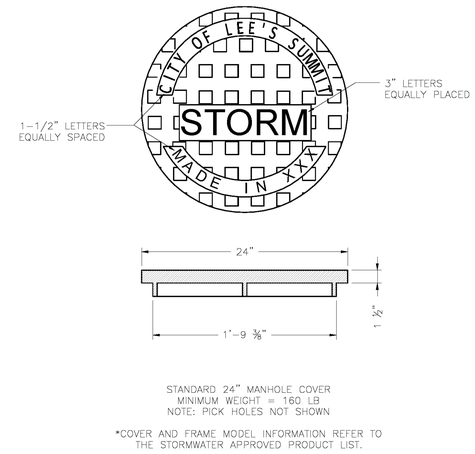

LEE'S SUMMIT MISSOURI
PUBLIC WORKS ENGINEERING DIVISION | 220 SE GREEN STREET | LEE'S SUMMIT, MO 64063
STORM MANHOLE COVER DETAIL
Date: 04/17
Drawn By: MJF
Checked By: DL
STM-6

1 STORM MANHOLE COVER

NOT TO SCALE

KEYNOTES	
CODE	DESCRIPTION
1	CONCRETE REINFORCEMENT; TWO, NO. 2 BARS
2	CONCRETE REINFORCEMENT; FOUR, NO. 4 BARS
3	CONCRETE REINFORCEMENT; NO. 4 BARS AT 12" O.C. EACH WAY IN FLOOR AND WALLS
4	SLOPE APRON TO DRAIN
	NOTE: CHAMFER ON ALL EXPOSED EDGES 1"

TABLE OF DIMENSIONS				
SIZE	4'	6'	8'	10'
A	32"	48"	72"	96"
B	48"	72"	96"	120"
C	30"	44"	50"	56"
D	25"	36"	52"	66"
E	24"	36"	59"	83"
F	N/A	8"	8"	8"
MAX. OPG.	18"	26"	40"	
WT. (LB)	1090	3130	5625	8575

* 0" ON 4' WINGED HEADWALL

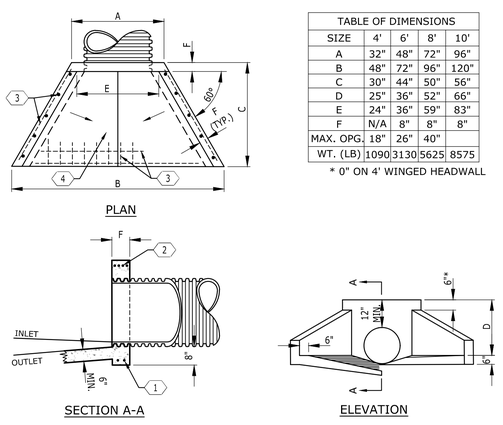

6 WINGED HEADWALL

NOT TO SCALE

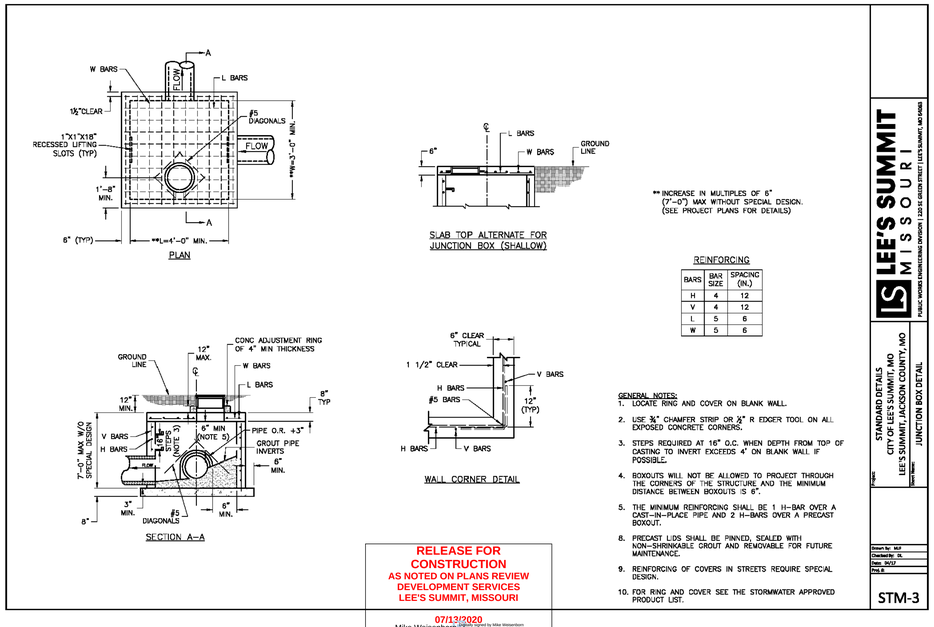

** INCREASE IN MULTIPLES OF 6" (7'-0") MAX WITHOUT SPECIAL DESIGN. (SEE PROJECT PLANS FOR DETAILS)

REINFORCING

BARS	BAR SIZE	SPACING (IN.)
H	4	12
V	4	12
L	5	6
W	5	6

GENERAL NOTES:
1. LOCATE RING AND COVER ON BLANK WALL.
2. USE ¾" CHAMFER STRIP OR ¾" R EDGER TOOL ON ALL EXPOSED CONCRETE CORNERS.
3. STEPS REQUIRED AT 16" O.C. WHEN DEPTH FROM TOP OF CASTING TO INVERT EXCEEDS 4' ON BLANK WALL IF POSSIBLE.
4. BOXOUTS WILL NOT BE ALLOWED TO PROJECT THROUGH THE CORNERS OF THE STRUCTURE AND THE MINIMUM DISTANCE BETWEEN BOXOUTS IS 6".
5. THE MINIMUM REINFORCING SHALL BE 1 H-BAR OVER A CAST-IN-PLACE PIPE AND 2 H-BARS OVER A PRECAST BOXOUT.
6. PRECAST LIDS SHALL BE PINNED, SEALED WITH NON-SHRINKABLE GROUT AND REMOVABLE FOR FUTURE MAINTENANCE.
9. REINFORCING OF COVERS IN STREETS REQUIRE SPECIAL DESIGN.
10. FOR RING AND COVER SEE THE STORMWATER APPROVED PRODUCT LIST.

RELEASE FOR CONSTRUCTION
AS NOTED ON PLANS REVIEW
DEVELOPMENT SERVICES
LEE'S SUMMIT, MISSOURI
07/13/2020
Mike Weisenborn
Digitally signed by Mike Weisenborn
Date: 2020.07.13 12:16:14-05'00'

LEE'S SUMMIT MISSOURI
PUBLIC WORKS ENGINEERING DIVISION | 220 SE GREEN STREET | LEE'S SUMMIT, MO 64063
STANDARD DETAILS
CITY OF LEE'S SUMMIT, MO
LEE'S SUMMIT, JACKSON COUNTY, MO
Title: JUNCTION BOX DETAIL
Drawn by: MJF
Checked by: DL
Date: 06/17
Proj. #:
STM-3

4 STORM JUNCTION MANHOLE

NOT TO SCALE

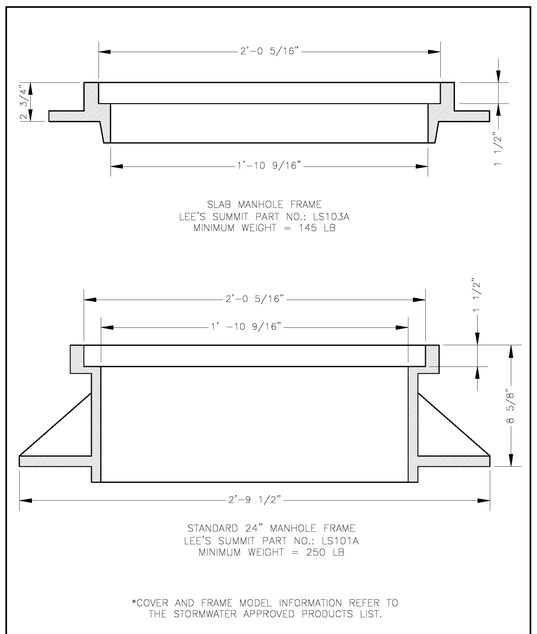

LEE'S SUMMIT MISSOURI
PUBLIC WORKS ENGINEERING DIVISION | 220 SE GREEN STREET | LEE'S SUMMIT, MO 64063
STORM MANHOLE FRAME DETAIL
Date: 04/17
Drawn By: MJF
Checked By: DL
STM-7

2 STORM MANHOLE FRAME

NOT TO SCALE

Catalyst DESIGN GROUP
5016 CENTENNIAL BLVD, SUITE 200, NASHVILLE, TN 37209
(615) 866-2410 | WWW.CATALYST-DG.COM

DIALYSIS CLINIC, INC.
1633 CHURCH STREET, STE 500
NASHVILLE, TN 37203
615.327.3061

STATE OF MISSOURI
JACK E. PARKER
NUMBER PE-2017040852
PROFESSIONAL ENGINEER
6/29/20

CONSTRUCTION DRAWINGS
DCI - LEE'S SUMMIT
2001 NW SHAMROCK AVENUE
LEE'S SUMMIT, MISSOURI, 64081
JACKSON COUNTY

NO.	DATE	DESCRIPTION
2	06/29/2020	STORM REVISIONS
1	06/23/2020	STORM REVISIONS

DRAWING TITLE
SITE DETAILS

PROJECT NUMBER
2018080111

DRAWING NUMBER
C7.3

P:\2018\2018080111\Acad\Cad\Construction\Sheets\C7.3_SITE-DETAILS.dwg\C7.3\Jul 08, 2020 - 9:29am\Mike Weisenborn