CANOPY ELECTRICAL REQUIREMENTS (NOT INCLUDING ATM MACHINE, SECURITY CAMERA & RELATED APPLIANCES):
LEDS: (41) 7100^K WHITE SLOAN PRISM #701269-7WSJ1-MB
(43) BLUE SLOAN PRISM #701269-BLSJ1-MB
DOWNLIGHTS: (2) E-CONOLIGHT 5000K WHITE LED LIGHT FIXTURE #E-CSA04A-W50W @ 0.37A
LED POWER SUPPLY: (3) SLOAN #701507-60C1 @ 0.70A
TOTAL LOAD: 2.84 AMPS @ 120VAC
CIRCUITS: (1) 20 AMP REQ'D.

ALL EXPOSED PAINTED SURFACES SHALL BE COATED WITH MATTHEWS #282-208SP VOC GLOSS CLEAR, WITH MINIMUM 2 MILS DRY FILM THICKNESS (DFT) PER MATTHEWS APPLICATION SPECIFICATIONS.

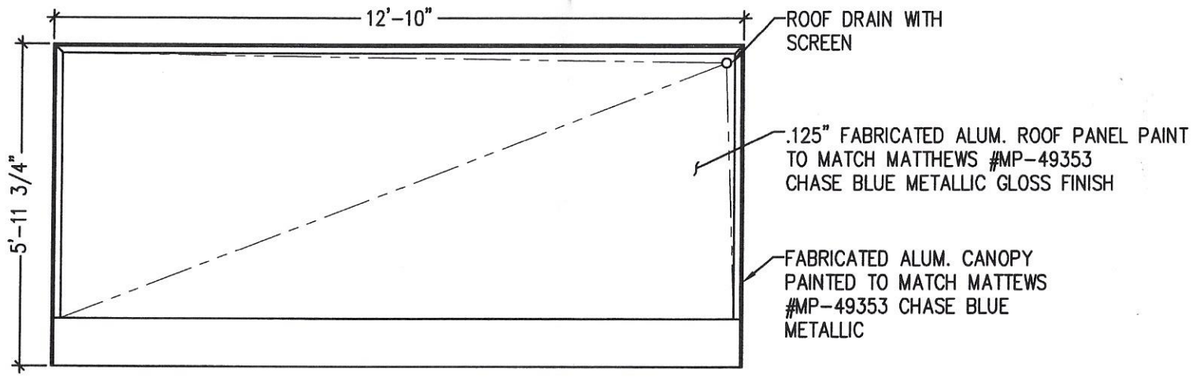

TOP VIEW

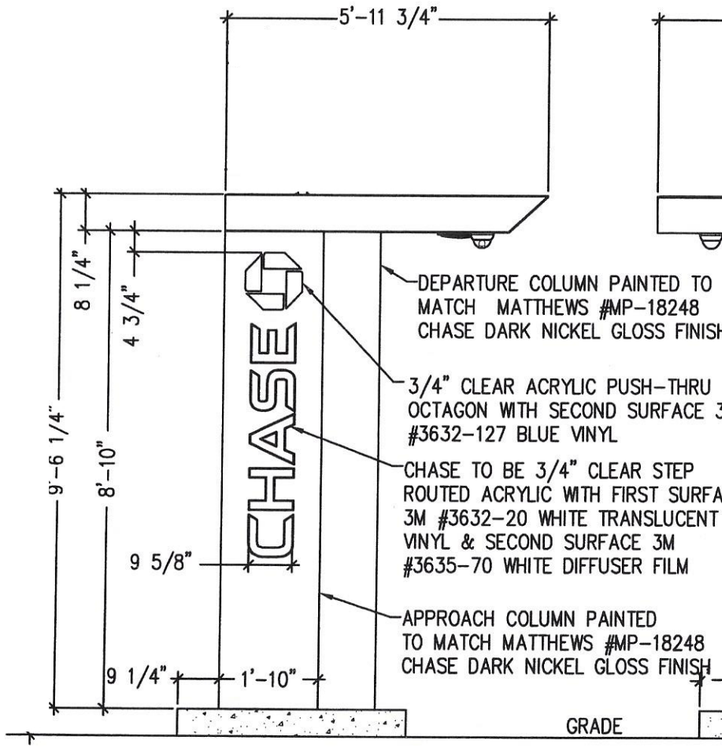

APPROACH ELEVATION

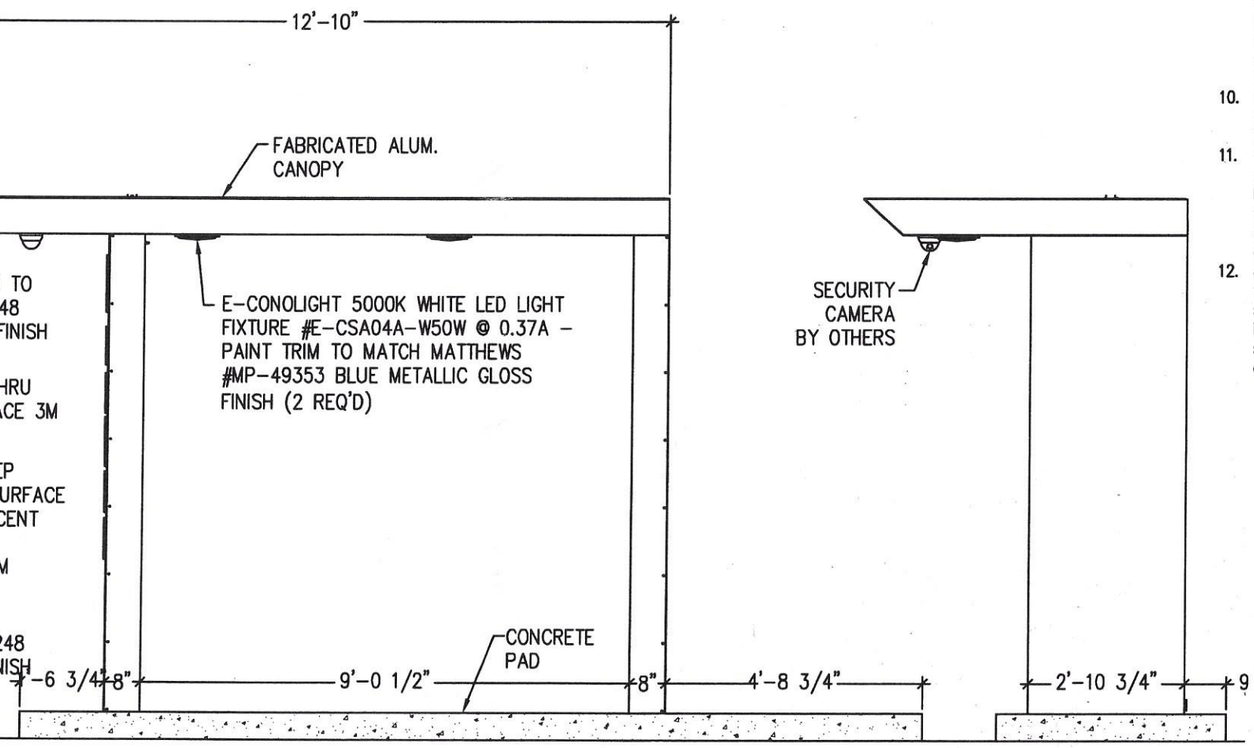

ELEVATION

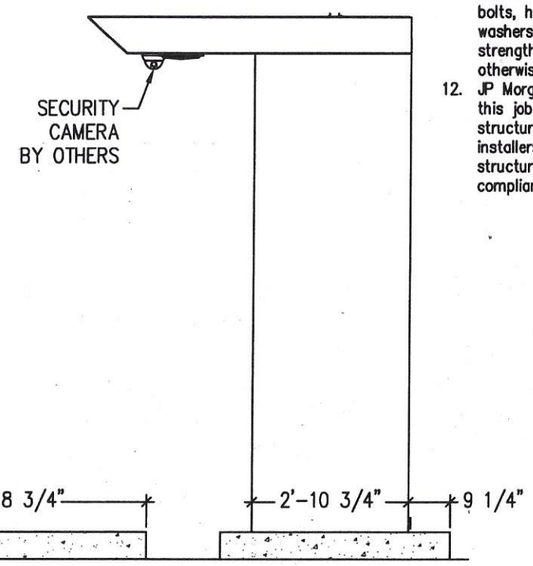

DEPARTURE ELEVATION

General Notes:

1. Design is based on a 115 mph, 3 second gust wind design per IBC 2015, Category II, Exposure C. 40psf Ground Snow Load.
2. Spread foundation is based on a presumptive safe vertical soil bearing pressure minimum of 1500 psf.
3. A soil report was not provided. Foundation analysis assumes Soil Classification 5. Allowable bearing pressure should be verified prior to placement of concrete. In the event that the stated requirements are not met and conditions appear deleterious, cease and secure excavation and immediately contact the project manager.
4. Foundation shall not be placed at the top of, or on the side of a slope exceeding 3:1, or adjacent to a fill slope unless re-evaluated by a competent Professional Engineer. Do not place foundation in fill.
5. Concrete shall be mixed to attain a minimum 28 day compressive strength of 3000 psi.
6. Steel reinforcing bars shall conform to ASTM A615, Grade 60 with deformations in accordance with ASTM A305. Welding of reinforcing bars is prohibited.
7. All voids between column base plate and foundation surface shall be completely filled with high-strength, non-shrink grout.
8. Anchor bolts shall meet ASTM F1554 Grade 36. Exposed surfaces shall be galvanized or coated to prevent corrosion.
9. All support members shall be free from defects. Steel tube shall meet ASTM A500 Grade B with a minimum yield strength of 46000 psi. Steel angle, channel and plate shall meet ASTM A36. Extruded aluminum shapes shall be 6061-T6 alloy. Aluminum sheet shall be 3003-H14 alloy. Aluminum plate shall be 5052-H34 alloy.
10. Welds shall be made with E70xx low hydrogen electrodes for steel & with 5356 filler for aluminum by persons qualified in accordance with AWS standards within the past two years.
11. All structural bolts shall conform to ASTM A325, and be zinc coated unless noted otherwise. When used with structural bolts, heavy hex nuts shall conform to ASTM A563, and washers shall conform to ASTM F436. Pretension all high strength bolts using the Turn-of-Nut method unless noted otherwise.
12. JP Morgan Chase will not be responsible for the safety on this job site before, during or after installation of this structure. It is the responsibility of the contractors and installers to ensure that the installation and erection of this structure is performed using methods that are in full compliance with OSHA regulations.

Jeff L. Griffin
12255 W. 187th St.
Mokena, IL 60448

STATE OF MISSOURI
JEFF L. GRIFFIN
NUMBER PE-28808
PROFESSIONAL ENGINEER
2/25/20

7	2/18/11	CHANGED COLOR TO JMP-49353 DARK NICKEL, REMOVED WHITE OCTAGONS ON DEPARTURE COLUMN, CHANGED OCTAGON ON APPROACH COLUMN TO PMP-18248, MADE "CHASE" COPY STEP-ROUTED, CHANGED ROOF OCTAGON TO FACETED DESIGN, CHANGED APPROACH COLUMN OCTAGON LENS TO BLUE FROM WHITE.	TRR	IK	3	11/22/11	CHANGED DEPARTURE COLUMN COLOR TO JMP-18248 DARK NICKEL FROM JMP-49353 METALLIC BLUE	TRR	IK	11	10/31/13	ADDED TACK WELD SYMBOL TO A.B. DETAILS	TRR	IK	6	9/6/16	CHANGED RUUD LIGHT FIXTURE TO CREE	TRR	IK	5	11/14/17	CHANGED COLUMN TOP PLATES TO 1/2" FROM 1/4"	JO	IK
					2	8/31/11	REVISED OCTAGON ON ROOF TO CORRECT ORIENTATION OF LOGO ON DEPARTURE SIDE OF CANOPY	TRR	IK	10	7/23/12	REVISED APPROACH COLUMN FOR SERVICABILITY	TRR	IK	10	6/20/16	CHANGED PERMLIGHT LEDs TO GE	TRR	IK	4	10/2/17	UPDATED E-CCS SERIES LIGHT FIXTURES TO THE E-CSA04 SERIES LIGHT FIXTURES	JO	IK
6	12/15/10	ADDED HEADACHE BAR ANCHOR DETAILS	TRR	IK	1	4/1/11	CHANGED DESIGNATION FROM CAN-ATM TO CAN-ATM-SIG-OCT CHANGED CANOPY MOUNTING BOLTS FROM 3/8" DIA. TO 1/2" DIA.	TRR	IK	9	2/22/12	REVISED FOUNDATION	TRR	IK	11	12/10/14	ADDED HID FIXTURES TO BACK OF CANOPY	TRR	IK	3	6/29/17	REVISED FOUNDATION DETAILS & UPDATED LEDs & DOWNLIGHTS	JO	IK

CHASE

These documents represent prototypical design drawings created specifically for use by J.P. Morgan Chase. Use of this unpublished work for any purpose other than the intended application is strongly discouraged. Disclosure or reproduction of any of the information contained within these documents without the written consent of the owner is strictly prohibited.

SHT. 1 OF 12

BY: TRR

DATE: 1/27/09

Project No. 08-1218

Drawing No. B244040

REV.	DATE	DESCRIPTION	BY:	APR:
8	11/16/10	ADDED NOTE TO PAINT LIGHT FIXTURE TRIM TO MATCH CANOPY	TRR	IK
7	7/30/10	ADDED CLEAR COAT NOTE	TRR	IK
6	6/1/09	ADDED CAP PLATE TO OCTAGON MOUNTING STUB CALLED SECURITY CAMERA TO BE BY OTHERS	TRR	IK
5	5/15/09	CHANGED CANOPY TO PSCO DESIGN	TRR	IK

GRAPHICS DEPICTED ARE FOR ILLUSTRATIVE PURPOSES ONLY! USE ONLY APPROVED ARTWORK FOR PRODUCTION.

DESIGNATION: CAN-ATM-SIG-OCT

12	9/11/19	CHANGED ROOF OCTAGON FACES TO CURVED STYLE, CHANGED ROOF OCTAGON MOUNTING TUBES TO .188" THICK FROM .125", CHANGED PLACEMENT OF J-BOXES IN APPROACH COLUMN FOR BETTER SERVICE ACCESS, EXTENDED FOUNDATION TO INCLUDE ELECT. PEDESTAL	TRR	IK

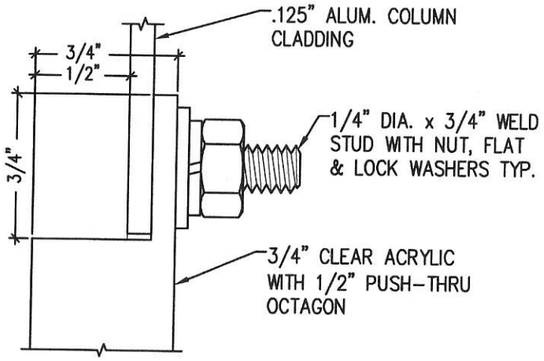

OCTAGON ATTACHMENT DETAIL

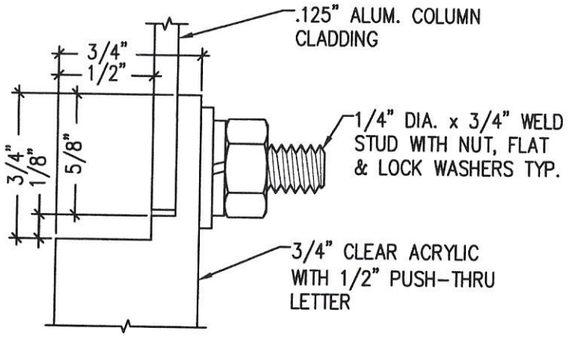

PUSH-THRU LETTER MOUNTING DETAIL

STEP ROUTING OF LETTERS SHALL BE FINISHED WITH A 1/8" DIA. BIT TO PROVIDE SHARP CORNERS

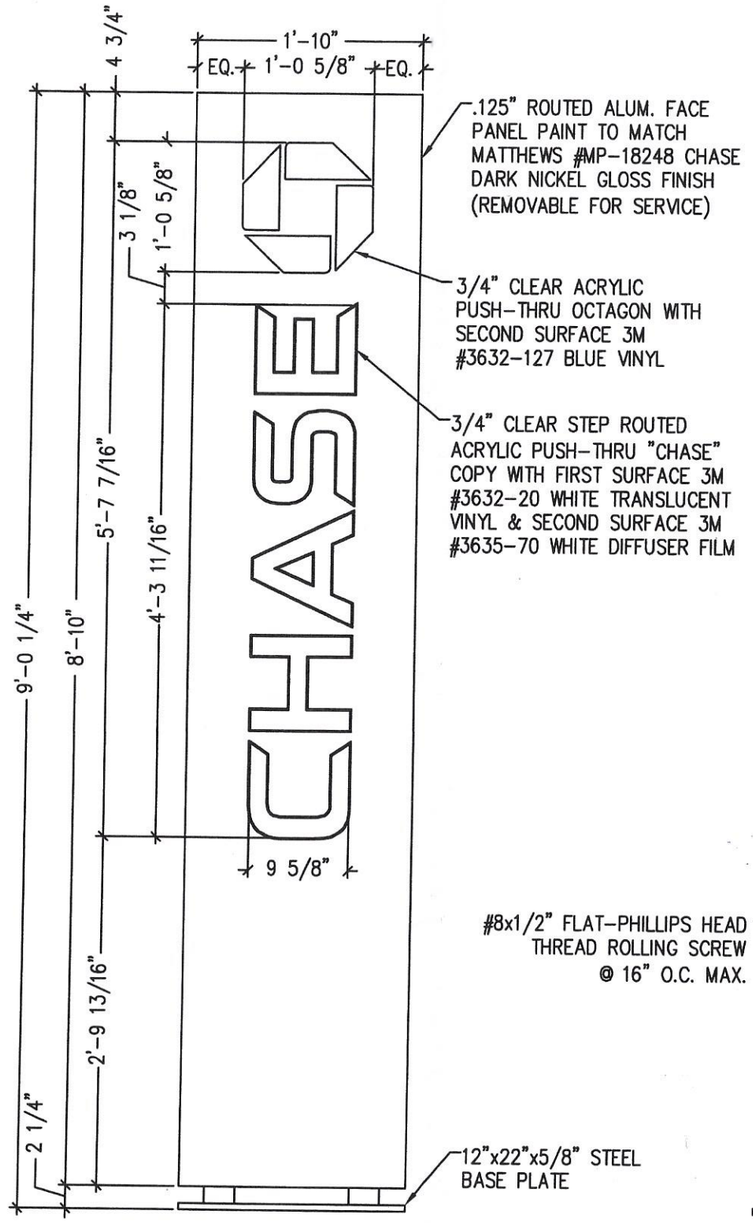

APPROACH COLUMN APPROACH VIEW

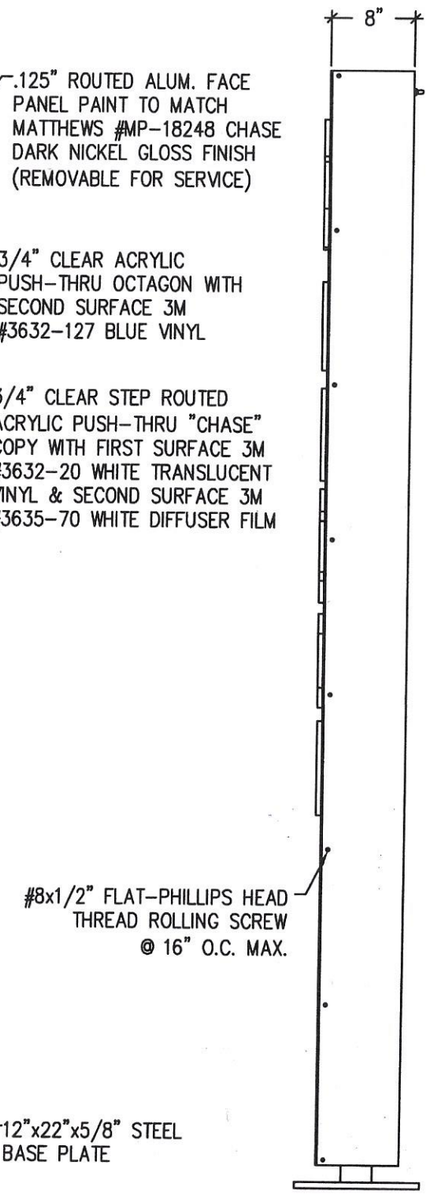

APPROACH COLUMN ELEVATION

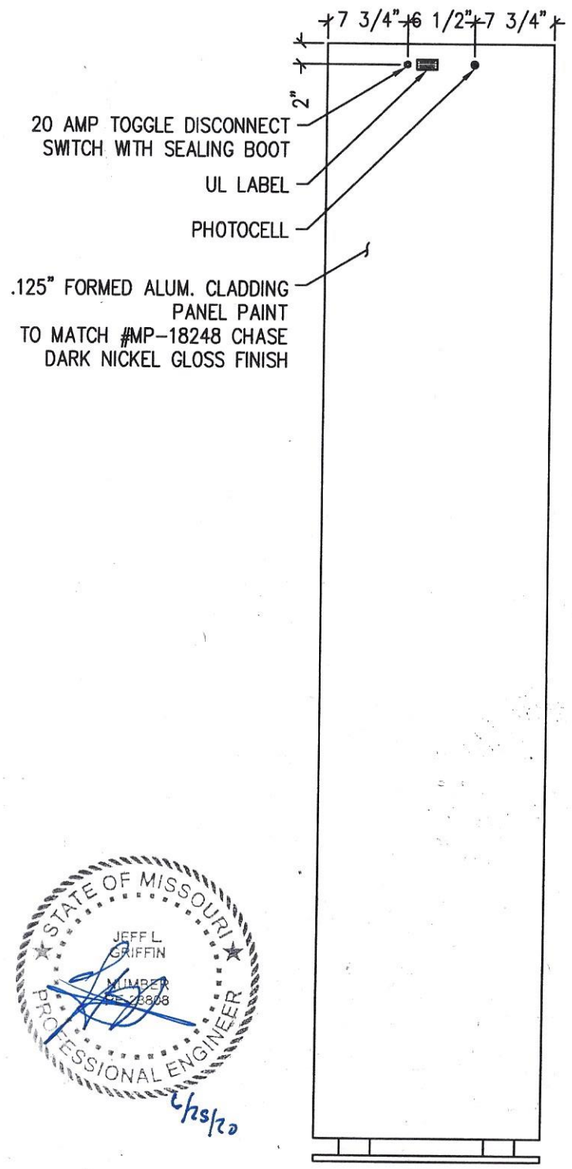

APPROACH COLUMN DEPARTURE VIEW

STATE OF MISSOURI
JEFF L. GRIFFIN
NUMBER
PROFESSIONAL ENGINEER
1/15/20

REV.	DATE	DESCRIPTION	BY:	APR:
F	2/18/11	CHANGED COLOR TO #MP-18248 DARK NICKEL. REMOVED WHITE OCTAGON ON DEPARTURE COLUMN. CHANGED OCTAGON ON APPROACH COLUMN TO PSCO-SIGNAL BLUE. "CHASE" COPY STEP-ROUTED. CHANGED ROOF OCTAGON TO FACETED DESIGN. CHANGED APPROACH COLUMN OCTAGON LENS TO BLUE FROM WHITE.	TRR	IK
E	12/15/10	ADDED HEADACHE BAR ANCHOR DETAILS	TRR	IK
D	11/22/11	CHANGED DEPARTURE COLUMN COLOR TO #MP-18248 DARK NICKEL FROM #MP-46353 METALLIC BLUE	TRR	IK
C	8/31/11	REVISED OCTAGON ON ROOF TO CORRECT ORIENTATION OF LOGO ON DEPARTURE SIDE OF CANOPY	TRR	IK
B	4/1/11	CHANGED DESIGNATION FROM CAN-ATM TO CAN-ATM-SIG-OCT. CHANGED CANOPY MOUNTING BOLTS FROM 3/8" DIA. TO 1/2" DIA.	TRR	IK
A	10/31/13	ADDED TACK WELD SYMBOL TO A.B. DETAILS	TRR	IK
1	7/23/12	REVISED APPROACH COLUMN FOR SERVICABILITY	TRR	IK
0	2/22/12	REVISED FOUNDATION	TRR	IK
P	9/6/16	CHANGED RUUD LIGHT FIXTURE TO CREE	TRR	IK
O	6/20/16	CHANGED PERMLIGHT LEDs TO GE	TRR	IK
N	12/10/14	ADDED HID FIXTURES TO BACK OF CANOPY	TRR	IK
M	11/16/10	ADDED NOTE TO PAINT LIGHT FIXTURE TRIM TO MATCH CANOPY	TRR	IK
L	7/30/10	ADDED CLEAR COAT NOTE	TRR	IK
K	6/1/09	ADDED CAP PLATE TO OCTAGON MOUNTING STUB CALLED SECURITY CAMERA TO BE BY OTHERS	TRR	IK
J	5/15/09	CHANGED CANOPY TO PSCO DESIGN	TRR	IK
X	11/14/17	CHANGED COLUMN TOP PLATES TO 1/2" FROM 1/4"	JO	IK
W	10/2/17	UPDATED E-CCS SERIES LIGHT FIXTURES TO THE E-CSA04 SERIES LIGHT FIXTURES	JO	IK
V	6/29/17	REVISED FOUNDATION DETAILS & UPDATED LEDs & DOWNLIGHTS	JO	IK
1	9/11/19	CHANGED ROOF OCTAGON FACES TO CURVED STYLE. CHANGED ROOF OCTAGON MOUNTING TUBES TO .188" THICK FROM .125". CHANGED PLACEMENT OF J-BOXES IN APPROACH COLUMN FOR BETTER SERVICE ACCESS. EXTENDED FOUNDATION TO INCLUDE ELECT. PEDESTAL	TRR	IK

CHASE

These documents represent prototypical design drawings created specifically for use by J.P. Morgan Chase. Use of this unpublished work for any purpose other than the intended application is strongly discouraged. Disclosure or reproduction of any of the information contained within these documents without the written consent of the owner is strictly prohibited.

SHT. 2 OF 12

BY: TRR

DATE: 1/27/09

Project No. 08-1218

Drawing No. B244040

GRAPHICS DEPICTED ARE FOR ILLUSTRATIVE PURPOSES ONLY! USE ONLY APPROVED ARTWORK FOR PRODUCTION.

DESIGNATION: CAN-ATM-SIG-OCT

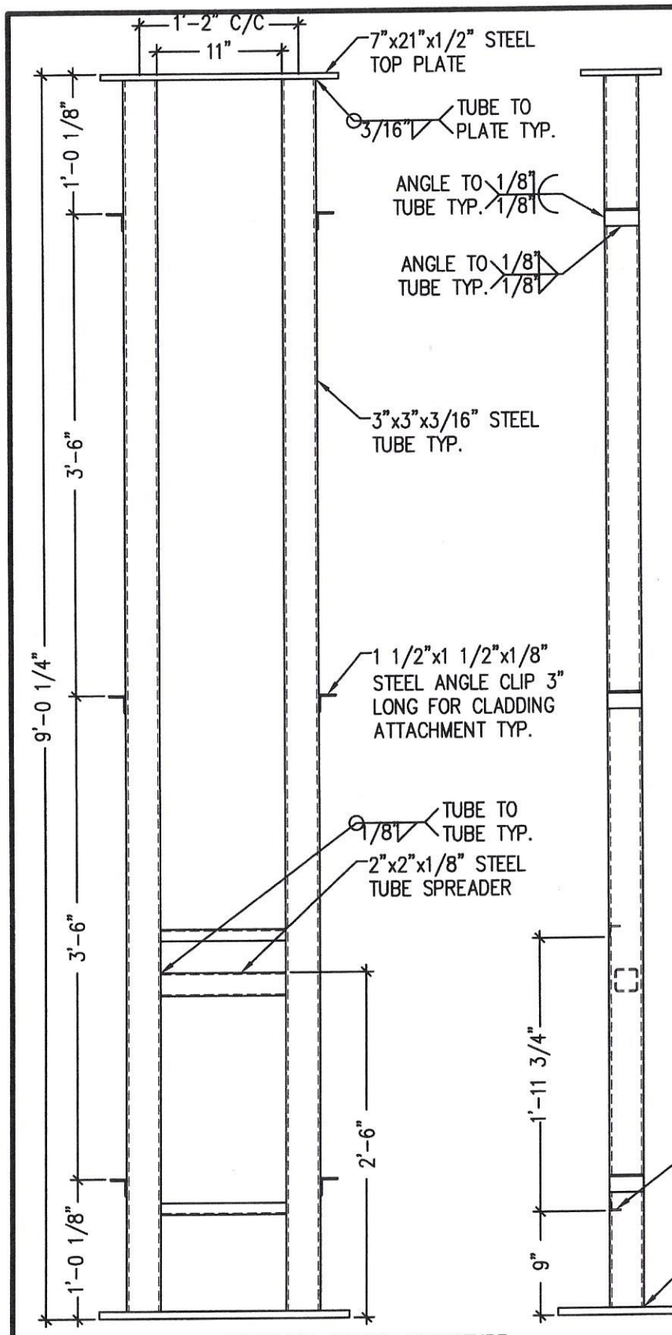

APPROACH COLUMN STRUCTURE

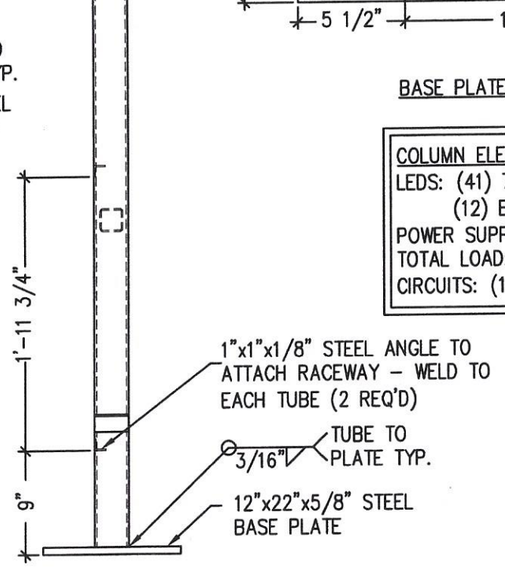

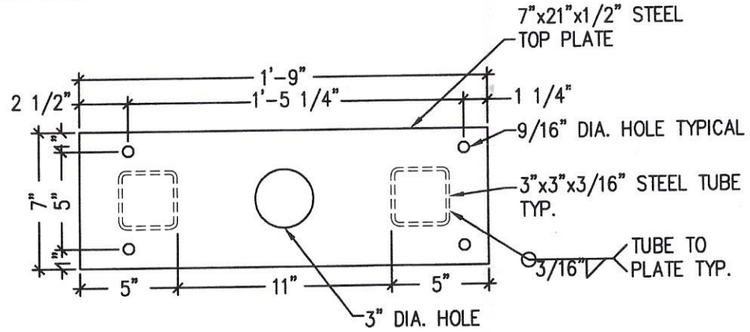

TOP PLATE DETAIL

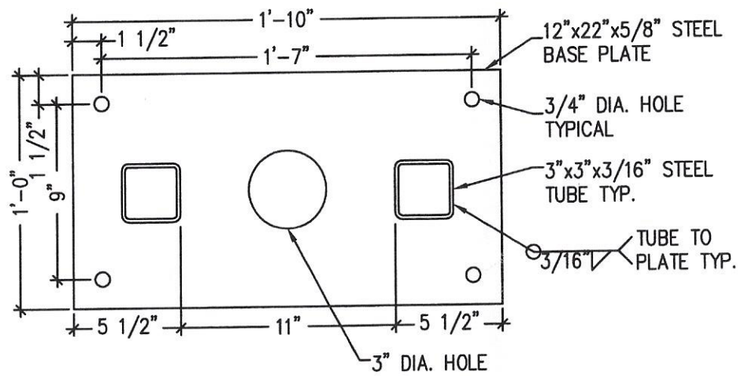

BASE PLATE DETAIL

COLUMN ELECTRICAL REQUIREMENTS:
LEDS: (41) 7100^K WHITE SLOAN PRISM 701269-7WSJ1-MB
(12) BLUE SLOAN PRISM #701269-BLSJ1-MB
POWER SUPPLY: (3) SLOAN #701507-60C1 @ 0.70A
TOTAL LOAD: 2.10 AMPS @ 120VAC
CIRCUITS: (1) 20 AMP REQ'D.

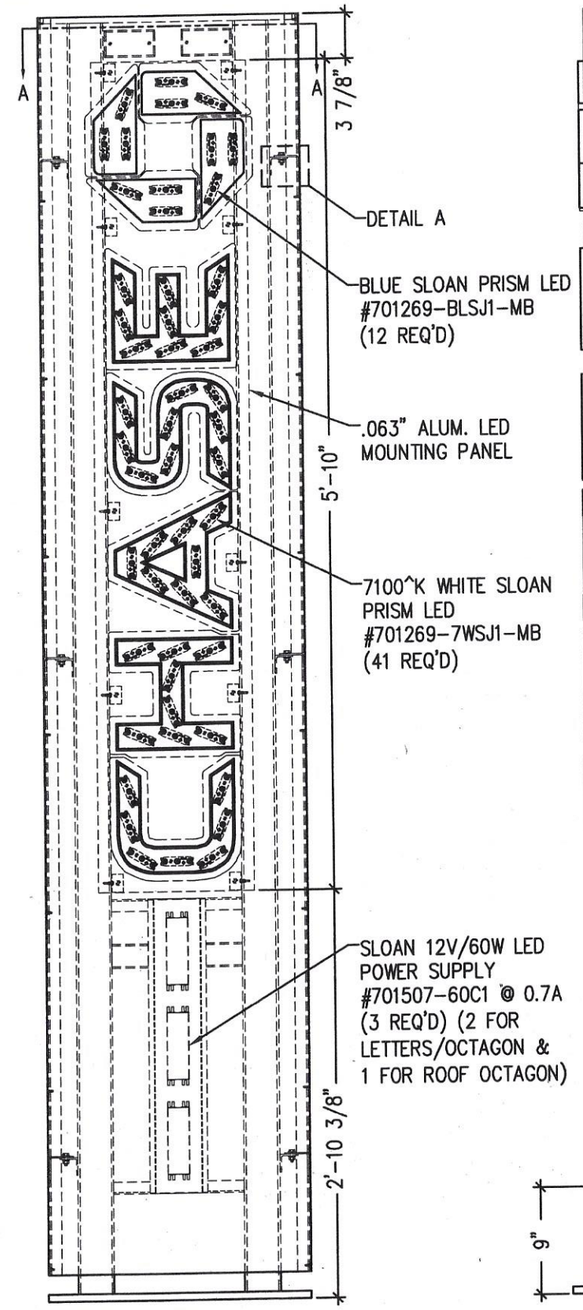

APPROACH COLUMN ASSEMBLED SIDE VIEW

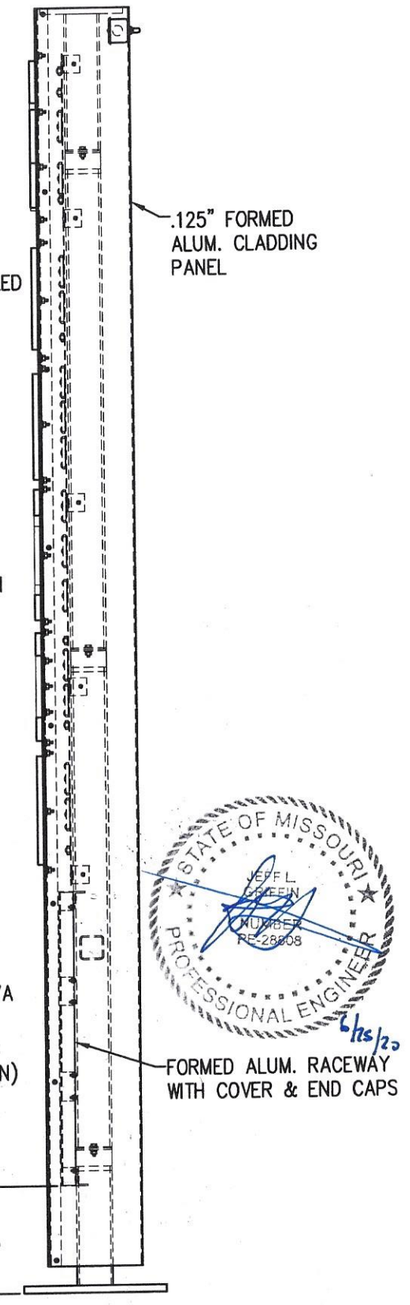

APPROACH COLUMN ASSEMBLED ELEVATION

STATE OF MISSOURI
JEFF L. GREEN
NUMBER PE-28608
PROFESSIONAL ENGINEER
6/25/20

E	2/18/11	CHANGED COLOR TO JMP-18248 DARK NICKEL, REMOVED WHITE OCTAGONS ON DEPARTURE COLUMN, CHANGED OCTAGON ON APPROACH COLUMN TO FACED WITH 7"x7"x1/2" TYP.-SILVER, CHANGED ROOF OCTAGON TO FACETED WITH 7"x7"x1/2" TYP.-SILVER, CHANGED ROOF OCTAGON TO BLUE FROM WHITE. CHANGED APPROACH COLUMN OCTAGON LENS TO BLUE FROM WHITE.	TRR	IK	1	11/22/11	CHANGED DEPARTURE COLUMN COLOR TO JMP-18248 DARK NICKEL FROM JMP-46353 METALLIC BLUE	TRR	IK	A	10/31/13	ADDED TACK WELD SYMBOL TO A.B. DETAILS	TRR	IK	D	9/6/16	CHANGED RUUD LIGHT FIXTURE TO CREE	TRR	IK	F	11/14/17	CHANGED COLUMN TOP PLATES TO 1/2" FROM 1/4"	JO	IK
					2	8/31/11	REVISED OCTAGON ON ROOF TO CORRECT ORIENTATION OF LOGO ON DEPARTURE SIDE OF CANOPY	TRR	IK	1	7/23/12	REVISED APPROACH COLUMN FOR SERVICABILITY	TRR	IK	E	6/20/16	CHANGED PERMLIGHT LEDs TO GE	TRR	IK	G	10/2/17	UPDATED E-OCS SERIES LIGHT FIXTURES TO THE E-CSA04 SERIES LIGHT FIXTURES	JO	IK
F	12/15/10	ADDED HEADACHE BAR ANCHOR DETAILS	TRR	IK	G	4/1/11	CHANGED DESIGNATION FROM CAN-ATM TO CAN-ATM-SIG-OCT CHANGED CANOPY MOUNTING BOLTS FROM 3/8" DIA. TO 1/2" DIA.	TRR	IK	K	2/22/12	REVISED FOUNDATION	TRR	IK	H	12/10/14	ADDED HID FIXTURES TO BACK OF CANOPY	TRR	IK	H	6/29/17	REVISED FOUNDATION DETAILS & UPDATED LEDs & DOWNLIGHTS	JO	IK

CHASE

These documents represent prototypical design drawings created specifically for use by J.P. Morgan Chase. Use of this unpublished work for any purpose other than the intended application is strongly discouraged. Disclosure or reproduction of any of the information contained within these documents without the written consent of the owner is strictly prohibited.

SHT.	BY:	Project No.					
3	TRR	08-1218	11/16/10	ADDED NOTE TO PAINT LIGHT FIXTURE TRIM TO MATCH CANOPY	TRR	IK	
OF	DATE:	Drawing No.	7/30/10	ADDED CLEAR COAT NOTE	TRR	IK	
12	1/27/09	B244040	6/1/09	ADDED CAP PLATE TO OCTAGON MOUNTING STUB CALLED SECURITY CAMERA TO BE BY OTHERS	TRR	IK	
			5/15/09	CHANGED CANOPY TO PSCO DESIGN	TRR	IK	
			REV.	DATE	DESCRIPTION	BY:	APR:

GRAPHICS DEPICTED ARE FOR ILLUSTRATIVE PURPOSES ONLY! USE ONLY APPROVED ARTWORK FOR PRODUCTION.

DESIGNATION:
CAN-ATM-SIG-OCT

9/11/19	CHANGED ROOF OCTAGON FACES TO CURVED STYLE, CHANGED ROOF OCTAGON MOUNTING TUBES TO .188" THICK FROM .125", CHANGED PLACEMENT OF J-BOXES IN APPROACH COLUMN FOR BETTER SERVICE ACCESS, EXTENDED FOUNDATION TO INCLUDE ELECT. PEDESTAL	TRR	IK

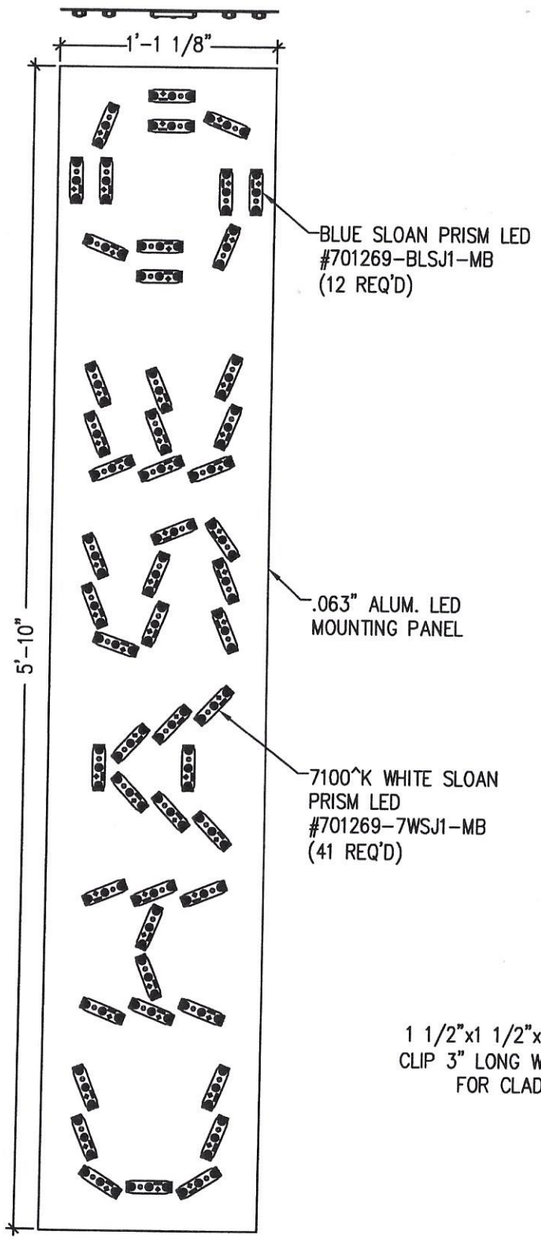

LED MOUNTING PANEL DETAIL

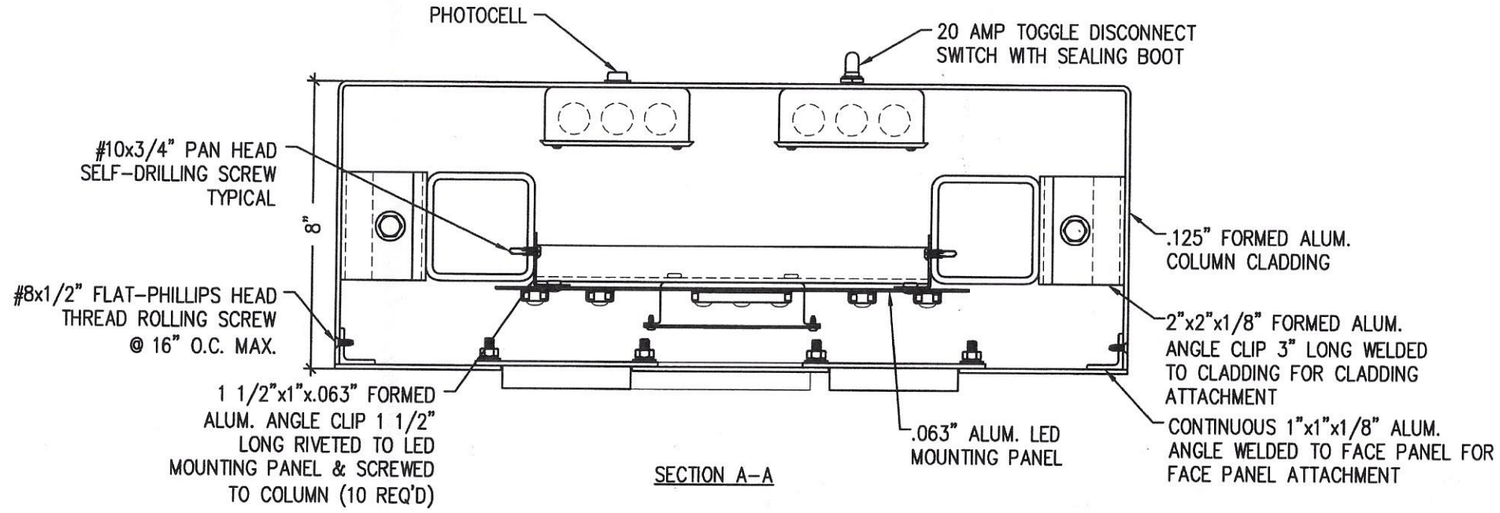

SECTION A-A

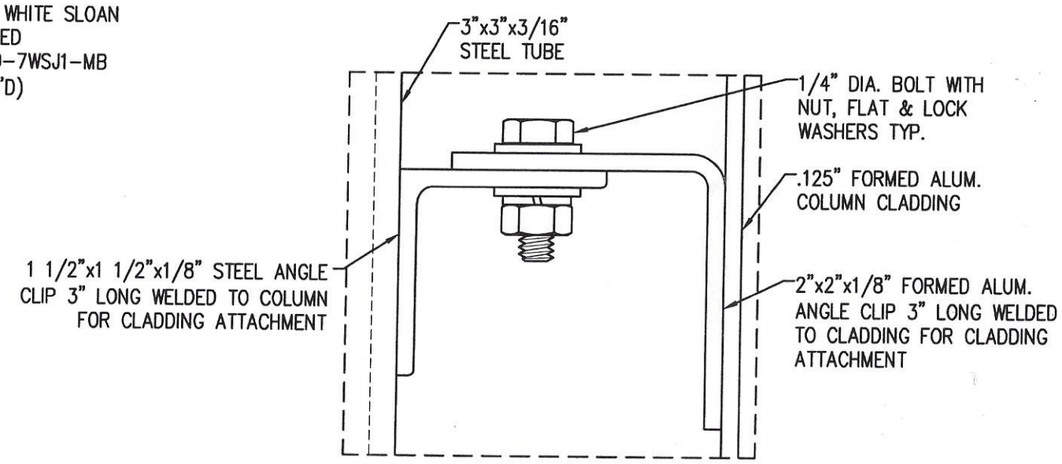

DETAIL A

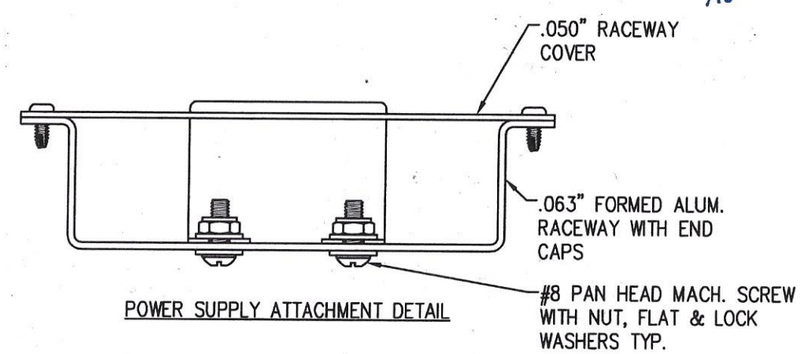

POWER SUPPLY ATTACHMENT DETAIL

2	2/18/11	CHANGED COLOR TO (MP-18248 DARK NICKEL, REMOVED WHITE OCTAGON ON DEPARTURE COLUMN, CHANGED OCTAGON ON APPROACH COLUMN TO PSMO-SIGNAL BLUE, "GRAPHIC COPY PSO-SIGNAL, CHANGED ROOF OCTAGON TO FINISH SIGNAL, CHANGED APPROACH COLUMN OCTAGON LENS TO BLUE PSMO SIGNAL	TRR	IK	1	11/22/11	CHANGED DEPARTURE COLUMN COLOR TO (MP-18248 DARK NICKEL FROM (MP-49353 METALLIC BLUE	TRR	IK	10	10/31/13	ADDED TACK WELD SYMBOL TO A.B. DETAILS	TRR	IK	8	9/6/16	CHANGED RUUD LIGHT FIXTURE TO CREE	TRR	IK	5	11/14/17	CHANGED COLUMN TOP PLATES TO 1/2" FROM 1/4"	JO	IK
1	12/15/10	ADDED HEADACHE BAR ANCHOR DETAILS	TRR	IK	1	8/31/11	REVISED OCTAGON ON ROOF TO CORRECT ORIENTATION OF LOGO ON DEPARTURE SIDE OF CANOPY	TRR	IK	1	7/23/12	REVISED APPROACH COLUMN FOR SERVICABILITY	TRR	IK	6	6/20/16	CHANGED PERMLIGHT LEDs TO GE	TRR	IK	4	10/2/17	UPDATED E-CC5 SERIES LIGHT FIXTURES TO THE E-CS404 SERIES LIGHT FIXTURES	JO	IK
					G	4/1/11	CHANGED DESIGNATION FROM CAN-ATM TO CAN-ATM-SIG-OCT CHANGED CANOPY MOUNTING BOLTS FROM 3/8" DIA. TO 1/2" DIA.	TRR	IK	K	2/22/12	REVISED FOUNDATION	TRR	IK	M	12/10/14	ADDED HID FIXTURES TO BACK OF CANOPY	TRR	IK	3	6/29/17	REVISED FOUNDATION DETAILS & UPDATED LEDs & DOWNLIGHTS	JO	IK

CHASE

These documents represent prototypical design drawings created specifically for use by J.P. Morgan Chase. Use of this unpublished work for any purpose other than the intended application is strongly discouraged. Disclosure or reproduction of any of the information contained within these documents without the written consent of the owner is strictly prohibited.

SHT.	BY:	Project No.
4	TRR	08-1218
OF 12	DATE: 1/27/09	Drawing No. B244040

REV.	DATE	DESCRIPTION	BY:	APR:
D	11/16/10	ADDED NOTE TO PAINT LIGHT FIXTURE TRIM TO MATCH CANOPY	TRR	IK
C	7/30/10	ADDED CLEAR COAT NOTE	TRR	IK
B	6/1/09	ADDED CAP PLATE TO OCTAGON MOUNTING STUB CALLED SECURITY CAMERA TO BE BY OTHERS	TRR	IK
A	5/15/09	CHANGED CANOPY TO PSCO DESIGN	TRR	IK

GRAPHICS DEPICTED ARE FOR ILLUSTRATIVE PURPOSES ONLY! USE ONLY APPROVED ARTWORK FOR PRODUCTION.

DESIGNATION: CAN-ATM-SIG-OCT

1	9/11/19	CHANGED ROOF OCTAGON FACES TO CURVED STYLE. CHANGED ROOF OCTAGON MOUNTING TUBES TO .188" THICK FROM .125". CHANGED PLACEMENT OF J-BOXES IN APPROACH COLUMN FOR BETTER SERVICE ACCESS. EXTENDED FOUNDATION TO INCLUDE ELECT. PEDESTAL	TRR	IK

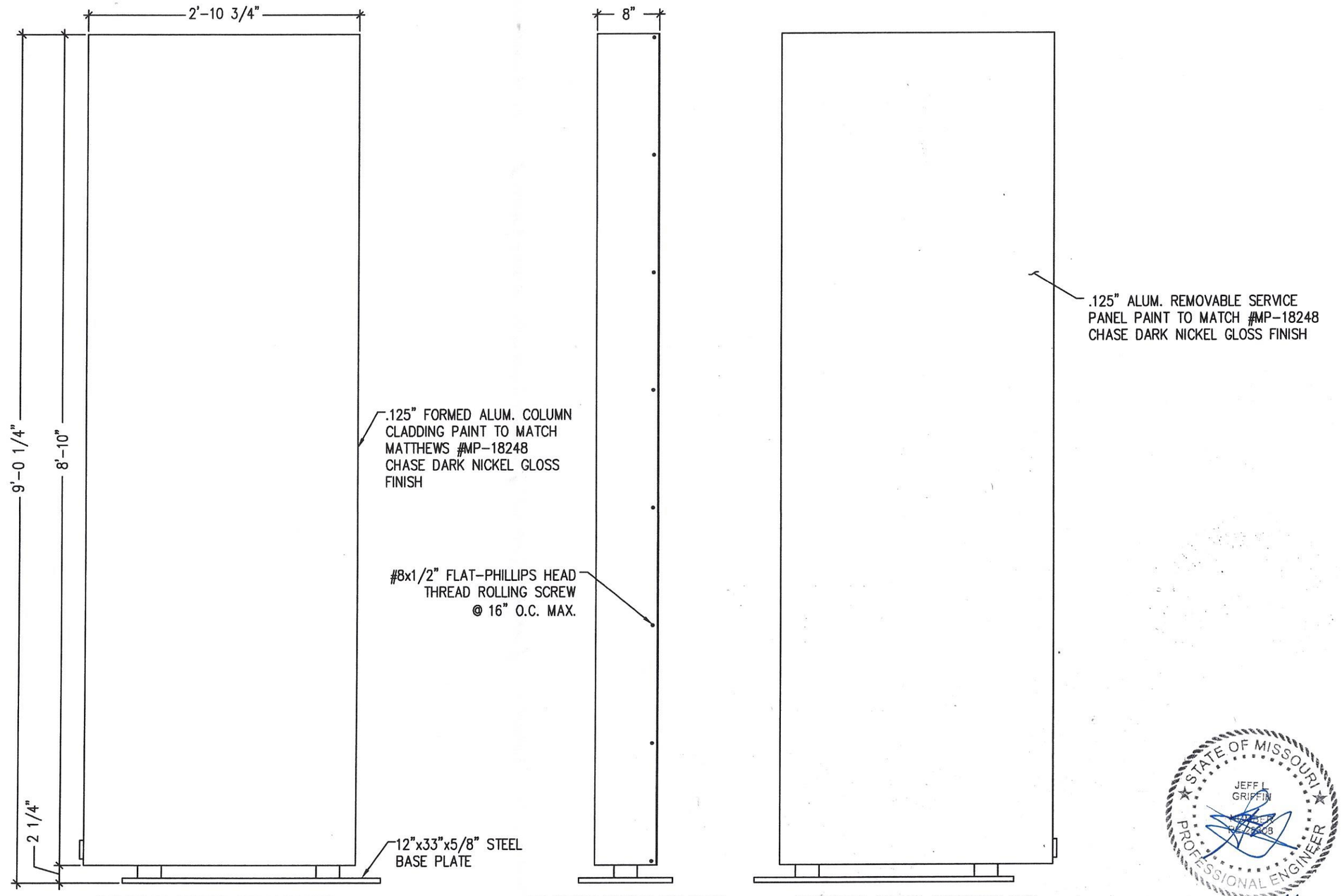

DEPARTURE COLUMN APPROACH VIEW

DEPARTURE COLUMN ELEVATION

DEPARTURE COLUMN DEPARTURE VIEW

STATE OF MISSOURI
JEFF L GRIFFIN
NUMBER
PROFESSIONAL ENGINEER
6/25/20

REV.	DATE	DESCRIPTION	BY:	APR:
2	2/18/11	CHANGED COLOR TO #MP-18248 DARK NICKEL, REMOVED WHITE OCTAGON ON DEPARTURE COLUMN, CHANGED OCTAGON ON APPROACH COLUMN TO FACED-TUBE, ADDED "CHASE" COPY ONTO FACEDTUBE, CHANGED ROOF OCTAGON TO FACETED DESIGN, CHANGED APPROACH COLUMN OCTAGON LENS TO GLASS FROM TAPE.	TRR	IK
1	12/15/10	ADDED HEADACHE BAR ANCHOR DETAILS	TRR	IK
1	11/22/11	CHANGED DEPARTURE COLUMN COLOR TO #MP-18248 DARK NICKEL FROM #MP-46353 METALLIC BLUE	TRR	IK
1	8/31/11	REVISED OCTAGON ON ROOF TO CORRECT ORIENTATION OF LOGO ON DEPARTURE SIDE OF CANOPY	TRR	IK
6	4/1/11	CHANGED DESIGNATION FROM CAN-ATM TO CAN-ATM-SIG-OCT CHANGED CANOPY MOUNTING BOLTS FROM 3/8" DIA. TO 1/2" DIA.	TRR	IK
1	10/31/13	ADDED TACK WELD SYMBOL TO A.B. DETAILS	TRR	IK
1	7/23/12	REVISED APPROACH COLUMN FOR SERVICABILITY	TRR	IK
1	2/22/12	REVISED FOUNDATION	TRR	IK
1	9/6/16	CHANGED RUUD LIGHT FIXTURE TO CREE	TRR	IK
1	6/20/16	CHANGED PERMLIGHT LEDs TO GE	TRR	IK
1	12/10/14	ADDED HID FIXTURES TO BACK OF CANOPY	TRR	IK
5	11/14/17	CHANGED COLUMN TOP PLATES TO 1/2" FROM 1/4"	JO	IK
8	10/2/17	UPDATED E-CC5 SERIES LIGHT FIXTURES TO THE E-CSM04 SERIES LIGHT FIXTURES	JO	IK
8	6/29/17	REVISED FOUNDATION DETAILS & UPDATED LEDs & DOWNLIGHTS	JO	IK
11	11/16/10	ADDED NOTE TO PAINT LIGHT FIXTURE TRIM TO MATCH CANOPY	TRR	IK
10	7/30/10	ADDED CLEAR COAT NOTE	TRR	IK
9	6/1/09	ADDED CAP PLATE TO OCTAGON MOUNTING STUB CALLED SECURITY CAMERA TO BE BY OTHERS	TRR	IK
1	5/15/09	CHANGED CANOPY TO PSCO DESIGN	TRR	IK
7	9/11/19	CHANGED ROOF OCTAGON FACES TO CURVED STYLE, CHANGED ROOF OCTAGON MOUNTING TUBES TO .188" THICK FROM .125", CHANGED PLACEMENT OF J-BOXES IN APPROACH COLUMN FOR BETTER SERVICE ACCESS, EXTENDED FOUNDATION TO INCLUDE ELECT. PEDESTAL	TRR	IK

CHASE

These documents represent prototypical design drawings created specifically for use by J.P. Morgan Chase. Use of this unpublished work for any purpose other than the intended application is strongly discouraged. Disclosure or reproduction of any of the information contained within these documents without the written consent of the owner is strictly prohibited.

SHT. 5 OF 12

BY: TRR

DATE: 1/27/09

Project No. 08-1218

Drawing No. B244040

GRAPHICS DEPICTED ARE FOR ILLUSTRATIVE PURPOSES ONLY! USE ONLY APPROVED ARTWORK FOR PRODUCTION.

DESIGNATION: CAN-ATM-SIG-OCT

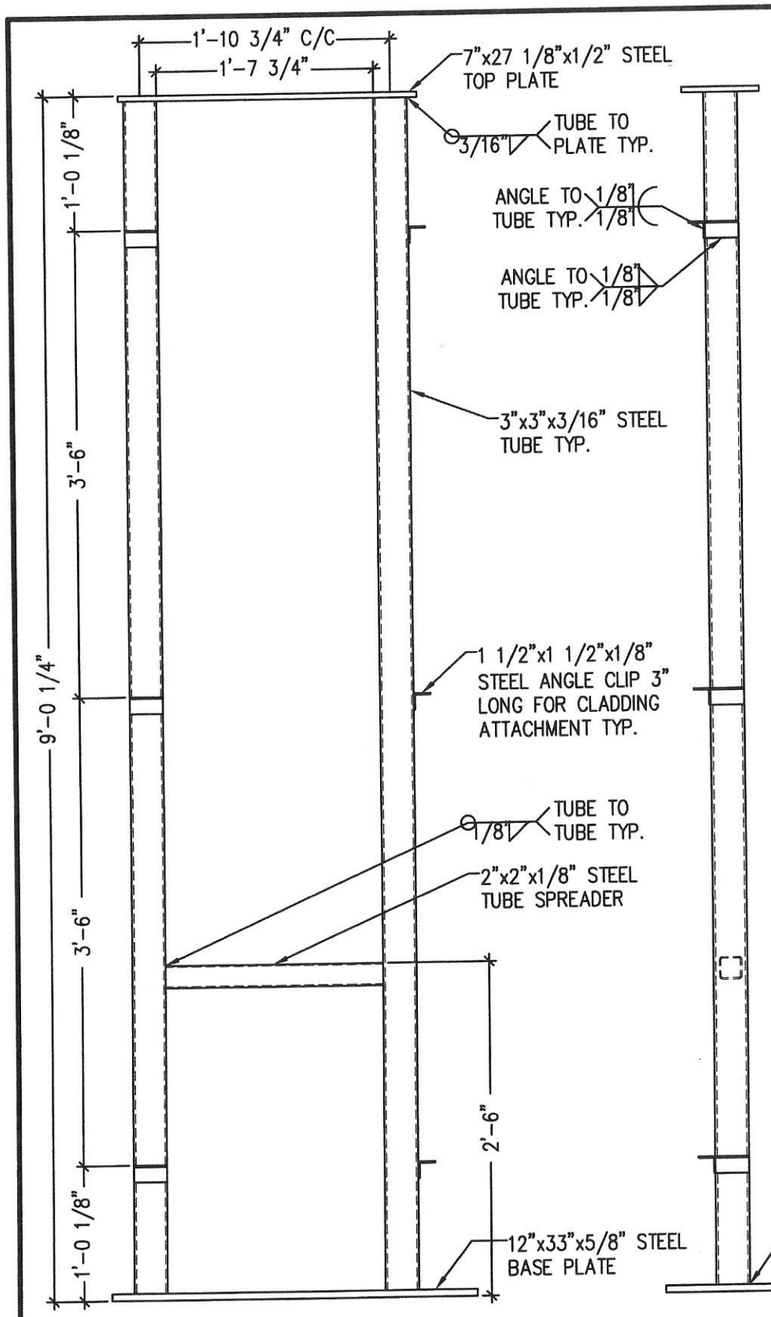

DEPARTURE COLUMN STRUCTURE

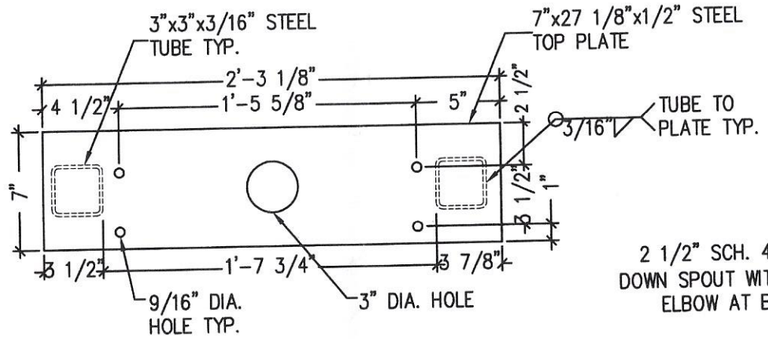

TOP PLATE DETAIL

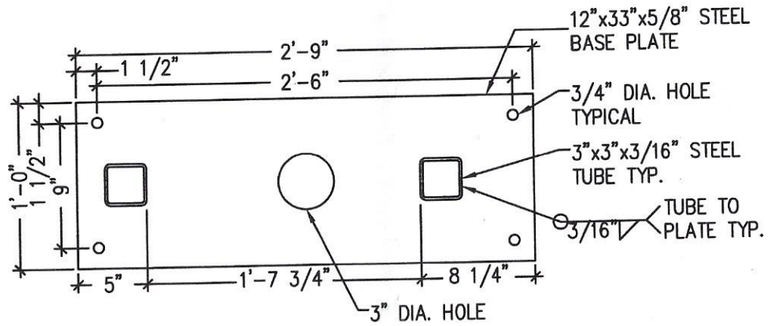

BASE PLATE DETAIL

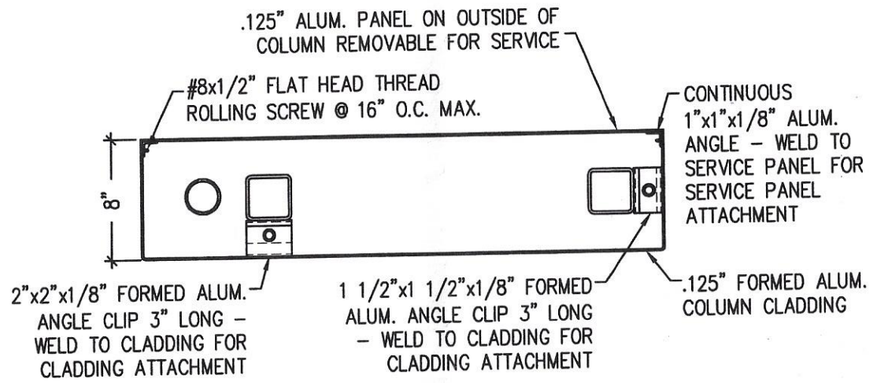

SECTION B-B

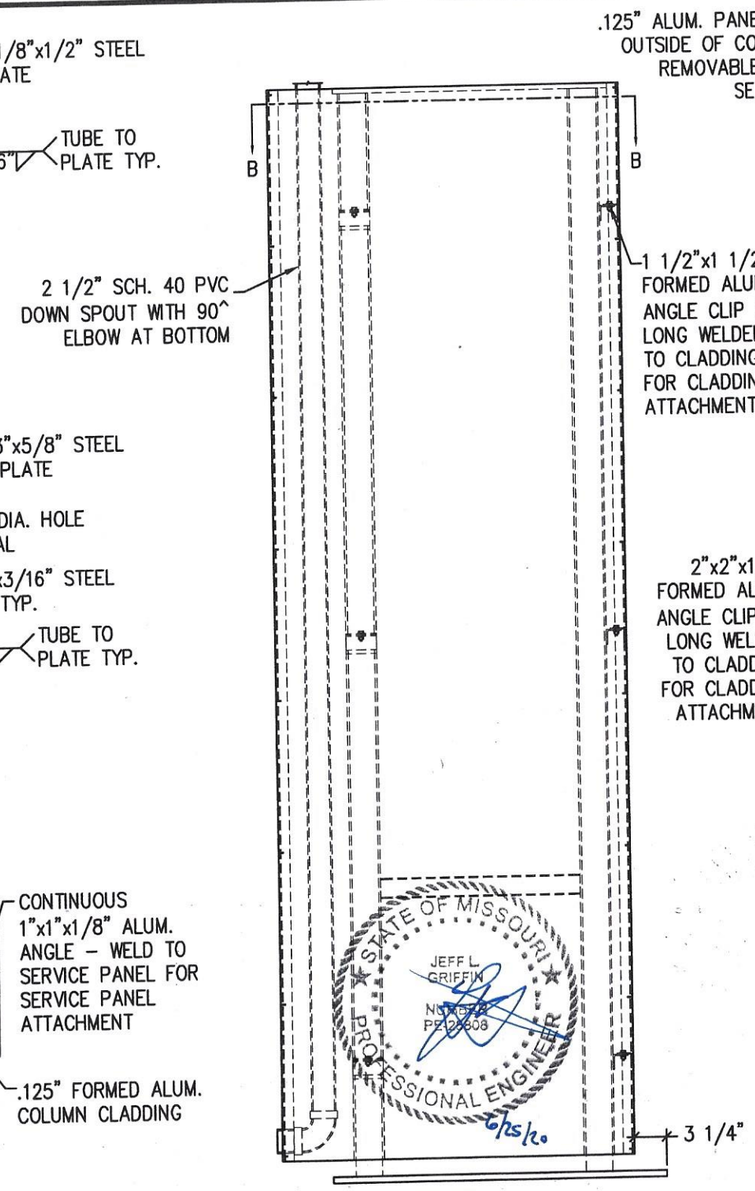

DEPARTURE COLUMN ASSEMBLED SIDE VIEW

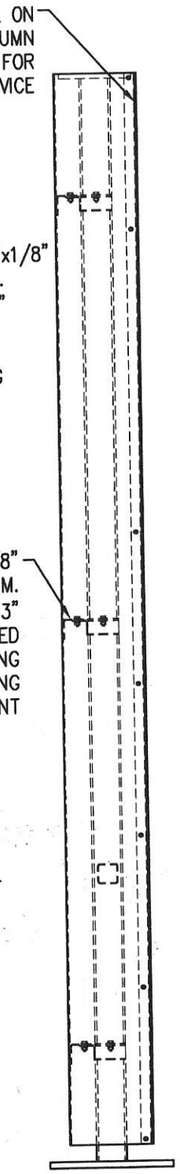

DEPARTURE COLUMN ASSEMBLED ELEVATION

REV.	DATE	DESCRIPTION	BY:	APR:
A	2/18/11	CHANGED COLOR TO JMP-18245 DARK NICKEL FROM JMP-18353 METALLIC BLUE, REMOVED WHITE OCTAGONS ON DEPARTURE COLUMN, CHANGED OCTAGON ON APPROACH COLUMN TO FROST-DURA BARE "CAN" COPY STYLE, REVISED, CHANGED ROOF OCTAGON TO FACETED STYLE, CHANGED APPROACH COLUMN OCTAGON LEDS TO BLUE FROM WHITE.	TRR	IK
B	12/15/10	ADDED HEADACHE BAR ANCHOR DETAILS	TRR	IK
1	11/22/11	CHANGED DEPARTURE COLUMN COLOR TO JMP-18246 DARK NICKEL FROM JMP-18353 METALLIC BLUE	TRR	IK
2	8/31/11	REVISED OCTAGON ON ROOF TO CORRECT ORIENTATION OF LOGO ON DEPARTURE SIDE OF CANOPY	TRR	IK
3	4/1/11	CHANGED DESIGNATION FROM CAN-ATM TO CAN-ATM-SIG-OCT, CHANGED CANOPY MOUNTING BOLTS FROM 3/8" DIA. TO 1/2" DIA.	TRR	IK
4	10/31/13	ADDED TACK WELD SYMBOL TO A.B. DETAILS	TRR	IK
5	7/23/12	REVISED APPROACH COLUMN FOR SERVICABILITY	TRR	IK
6	2/22/12	REVISED FOUNDATION	TRR	IK
7	9/6/16	CHANGED RUUD LIGHT FIXTURE TO CREE	TRR	IK
8	6/20/16	CHANGED PERMLIGHT LEDs TO GE	TRR	IK
9	12/10/14	ADDED HID FIXTURES TO BACK OF CANOPY	TRR	IK
10	11/14/17	CHANGED COLUMN TOP PLATES TO 1/2" FROM 1/4"	JO	IK
11	10/2/17	UPDATED E-CC5 SERIES LIGHT FIXTURES TO THE E-CS404 SERIES LIGHT FIXTURES	JO	IK
12	6/29/17	REVISED FOUNDATION DETAILS & UPDATED LEDs & DOWNLIGHTS	JO	IK
13	11/16/10	ADDED NOTE TO PAINT LIGHT FIXTURE TRIM TO MATCH CANOPY	TRR	IK
14	7/30/10	ADDED CLEAR COAT NOTE	TRR	IK
15	6/1/09	ADDED CAP PLATE TO OCTAGON MOUNTING STUB CALLED SECURITY CAMERA TO BE BY OTHERS	TRR	IK
16	5/15/09	CHANGED CANOPY TO PSCO DESIGN	TRR	IK
17	9/11/19	CHANGED ROOF OCTAGON FACES TO CURVED STYLE, CHANGED ROOF OCTAGON MOUNTING TUBES TO .188" THICK FROM .125", CHANGED PLACEMENT OF J-BOXES IN APPROACH COLUMN FOR BETTER SERVICE ACCESS, EXTENDED FOUNDATION TO INCLUDE ELECT. PEDESTAL	TRR	IK

CHASE

These documents represent prototypical design drawings created specifically for use by J.P. Morgan Chase. Use of this unpublished work for any purpose other than the intended application is strongly discouraged. Disclosure or reproduction of any of the information contained within these documents without the written consent of the owner is strictly prohibited.

SHT. 6 OF 12

BY: TRR

DATE: 1/27/09

Project No. 08-1218

Drawing No. B244040

GRAPHICS DEPICTED ARE FOR ILLUSTRATIVE PURPOSES ONLY! USE ONLY APPROVED ARTWORK FOR PRODUCTION.

DESIGNATION: CAN-ATM-SIG-OCT

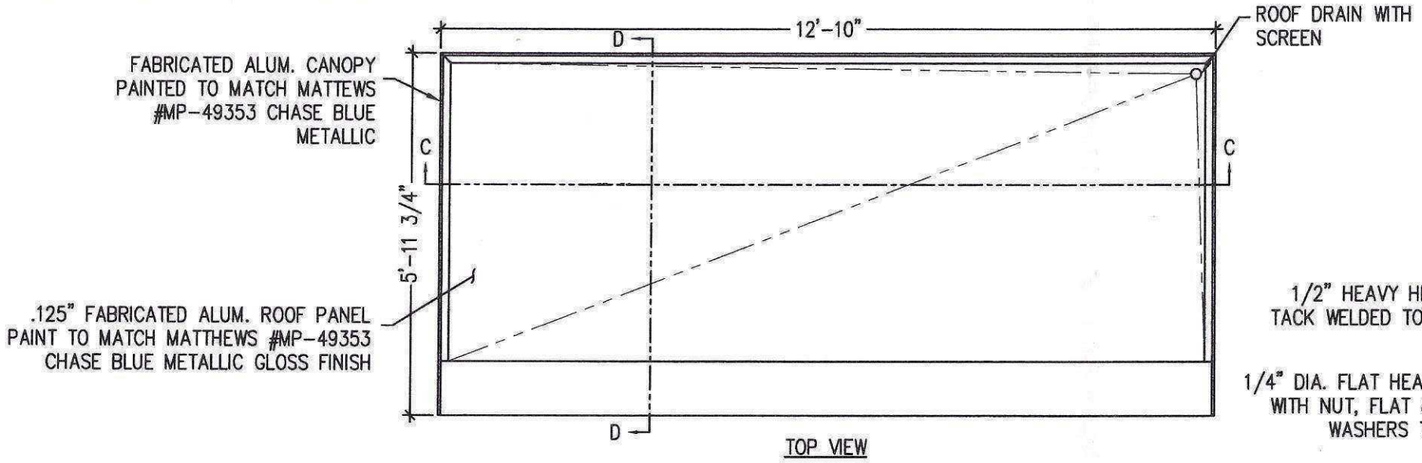

TOP VIEW

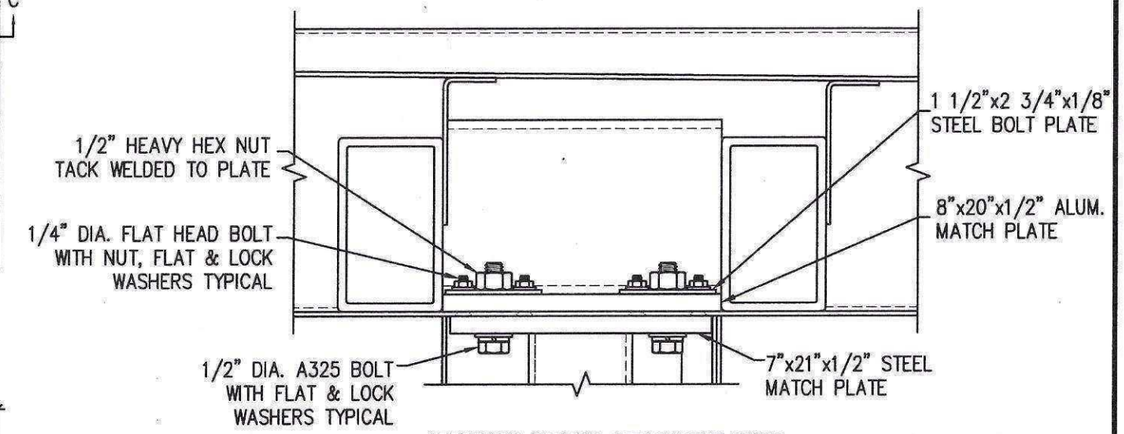

APPROACH COLUMN ATTACHMENT DETAIL

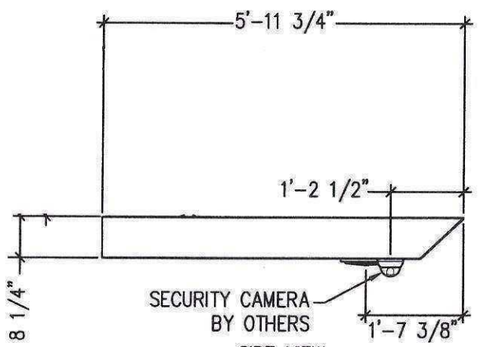

SIDE VIEW

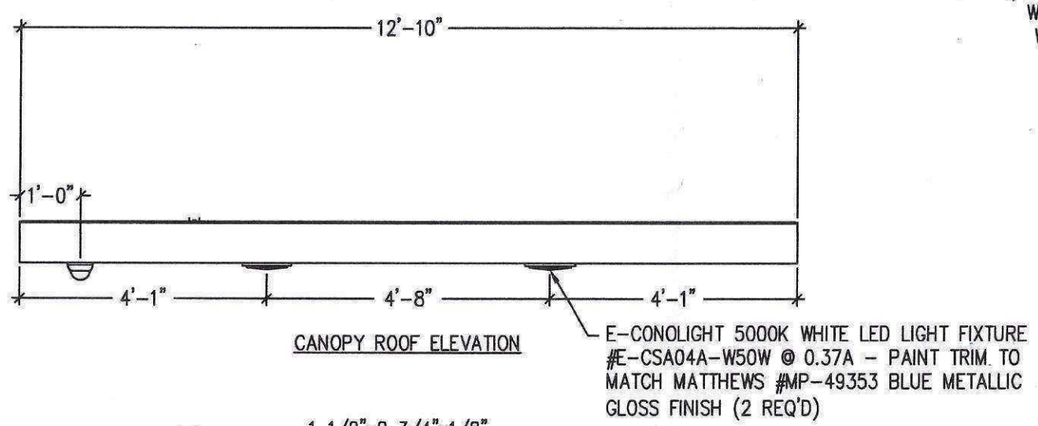

CANOPY ROOF ELEVATION

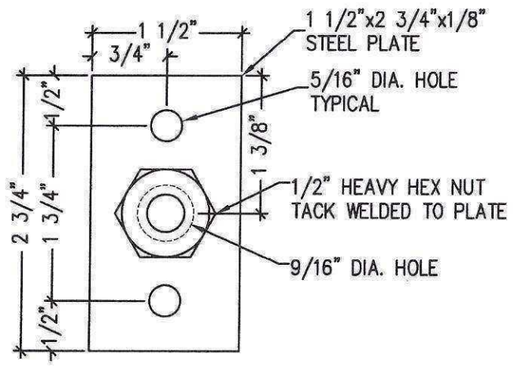

BOLT PLATE DETAIL

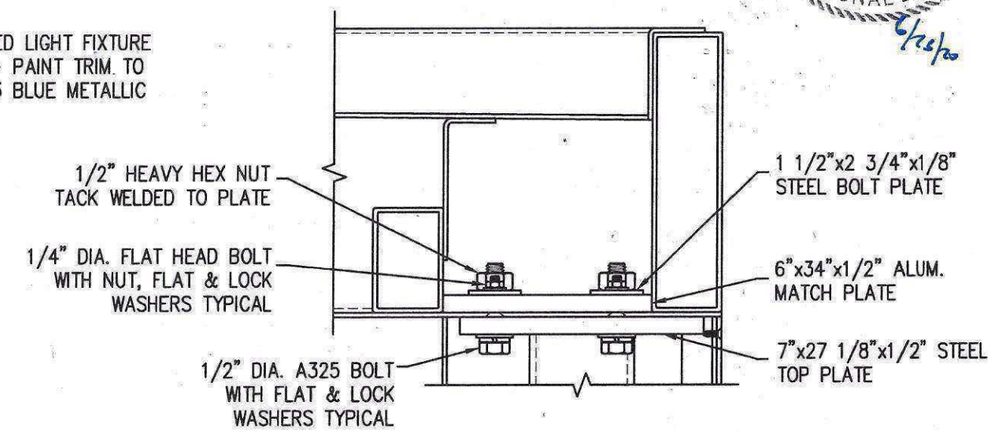

DEPARTURE COLUMN ATTACHMENT DETAIL

STATE OF MISSOURI
JEFF L. GRIFFIN
NUMBER
PROFESSIONAL ENGINEER
6/25/20

REV.	DATE	DESCRIPTION	BY:	APR:
E	2/18/11	CHANGED COLOR TO #MP-49353 DARK BLUE METAL. REMOVED WHITE OCTAGON ON MOUNTING COLUMN. CHANGED OCTAGON ON APPROACH COLUMN TO FACED-OVAL BASE "CHASE" COPY STEP-ALUMAL CHANGED ROOF OCTAGON TO FACETED METAL. CHANGED APPROACH COLUMN OCTAGON LOGO TO BLUE FROM WHITE.	TRR	IK
D	12/15/10	ADDED HEADACHE BAR ANCHOR DETAILS	TRR	IK
C	11/22/11	CHANGED DEPARTURE COLUMN COLOR TO #MP-18248 DARK NICKEL FROM #MP-49353 METALLIC BLUE	TRR	IK
B	8/31/11	REVISED OCTAGON ON ROOF TO CORRECT ORIENTATION OF LOGO ON DEPARTURE SIDE OF CANOPY	TRR	IK
A	4/1/11	CHANGED DESIGNATION FROM CAN-ATM TO CAN-ATM-SIG-OCT CHANGED CANOPY MOUNTING BOLTS FROM 3/8" DIA. TO 1/2" DIA.	TRR	IK
	10/31/13	ADDED TACK WELD SYMBOL TO A.B. DETAILS	TRR	IK
	7/23/12	REVISED APPROACH COLUMN FOR SERVICABILITY	TRR	IK
	2/22/12	REVISED FOUNDATION	TRR	IK
	9/6/16	CHANGED RUUD LIGHT FIXTURE TO CREE	TRR	IK
	6/20/16	CHANGED PERMLIGHT LEDs TO GE	TRR	IK
	12/10/14	ADDED HID FIXTURES TO BACK OF CANOPY	TRR	IK
	11/14/17	CHANGED COLUMN TOP PLATES TO 1/2" FROM 1/4"	JO	IK
	10/2/17	UPDATED E-CCS SERIES LIGHT FIXTURES TO THE E-CSA04 SERIES LIGHT FIXTURES	JO	IK
	6/29/17	REVISED FOUNDATION DETAILS & UPDATED LEDs & DOWNLIGHTS	JO	IK
	11/16/10	ADDED NOTE TO PAINT LIGHT FIXTURE TRIM TO MATCH CANOPY	TRR	IK
	7/30/10	ADDED CLEAR COAT NOTE	TRR	IK
	6/1/09	ADDED CAP PLATE TO OCTAGON MOUNTING STUB CALLED SECURITY CAMERA TO BE BY OTHERS	TRR	IK
	5/15/09	CHANGED CANOPY TO PSCO DESIGN	TRR	IK
1	9/11/19	CHANGED ROOF OCTAGON FACES TO CURVED STYLE. CHANGED ROOF OCTAGON MOUNTING TUBES TO .188" THICK FROM .125". CHANGED PLACEMENT OF J-BOXES IN APPROACH COLUMN FOR BETTER SERVICE ACCESS. EXTENDED FOUNDATION TO INCLUDE ELECT. PEDESTAL	TRR	IK

CHASE

These documents represent prototypical design drawings created specifically for use by J.P. Morgan Chase. Use of this unpublished work for any purpose other than the intended application is strongly discouraged. Disclosure or reproduction of any of the information contained within these documents without the written consent of the owner is strictly prohibited.

SHT. 7 OF 12

BY: TRR

DATE: 1/27/09

Project No. 08-1218

Drawing No. B244040

GRAPHICS DEPICTED ARE FOR ILLUSTRATIVE PURPOSES ONLY! USE ONLY APPROVED ARTWORK FOR PRODUCTION.

DESIGNATION: CAN-ATM-SIG-OCT

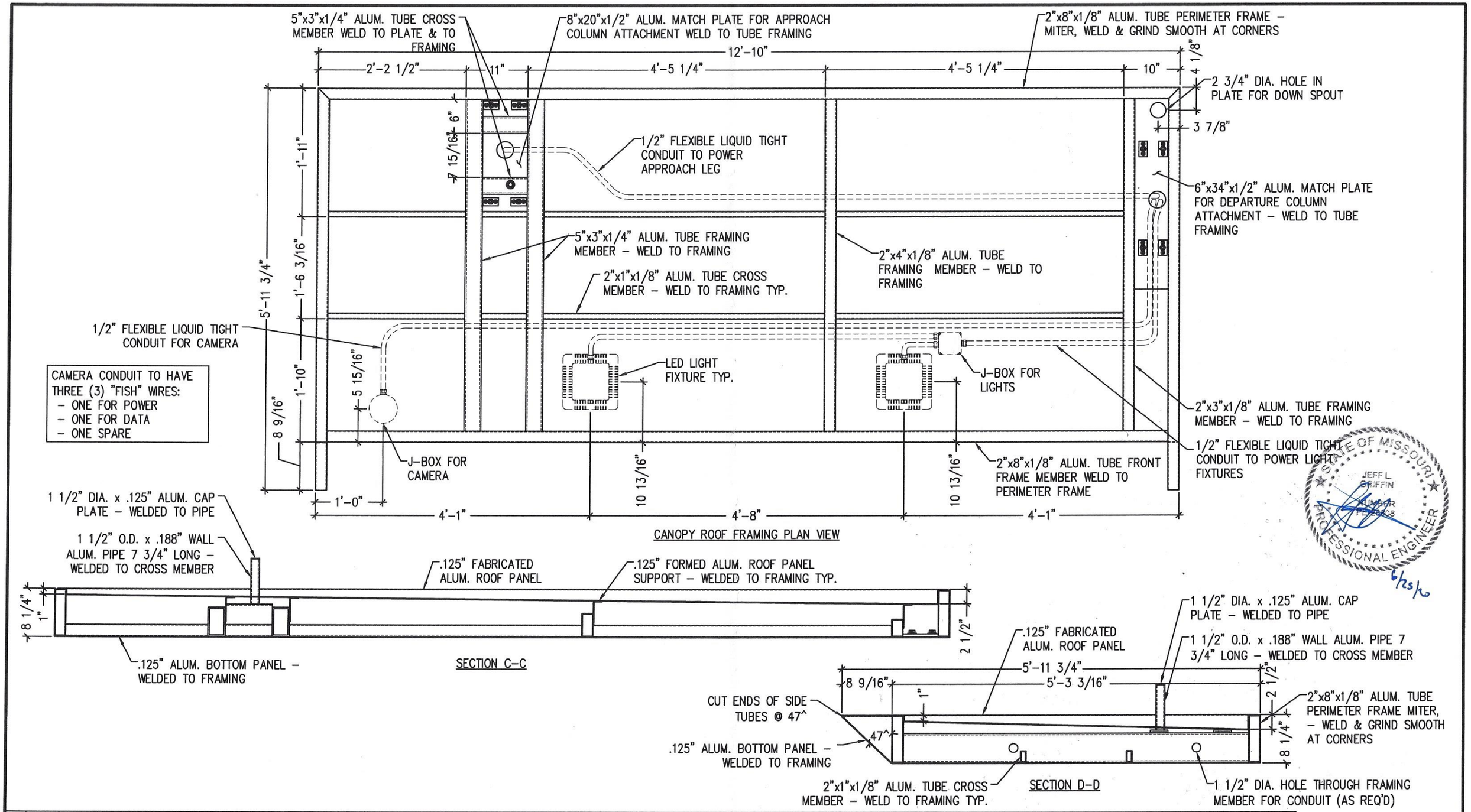

REV.	DATE	DESCRIPTION	BY:	APR:
2	2/18/11	CHANGED COLOR TO (MP-18248 DARK NICKEL, REMOVED THREE OCTAGONS ON REPRATURE COLUMN, CHANGED OCTAGON ON APPROACH COLUMN TO PSCO-SIGN. SIGN, "CHASE" TYPE & SIZE-PSCO, CHANGED ROOF OCTAGON TO FACETED DESIGN, CHANGED APPROACH COLUMN OCTAGON LENS TO BLUE FROM WHITE.	TRR	IK
3	12/15/10	ADDED HEADACHE BAR ANCHOR DETAILS	TRR	IK
4	11/22/11	CHANGED DEPARTURE COLUMN COLOR TO (MP-18248 DARK NICKEL FROM (MP-46353 METALLIC BLUE	TRR	IK
5	8/31/11	REVISED OCTAGON ON ROOF TO CORRECT ORIENTATION OF LOGO ON DEPARTURE SIDE OF CANOPY	TRR	IK
6	4/1/11	CHANGED DESIGNATION FROM CAN-ATM TO CAN-ATM-SIG-OCT CHANGED CANOPY MOUNTING BOLTS FROM 3/8" DIA. TO 1/2" DIA.	TRR	IK
7	10/31/13	ADDED TACK WELD SYMBOL TO A.B. DETAILS	TRR	IK
8	7/23/12	REVISED APPROACH COLUMN FOR SERVICABILITY	TRR	IK
9	2/22/12	REVISED FOUNDATION	TRR	IK
10	9/6/16	CHANGED RUUD LIGHT FIXTURE TO CREE	TRR	IK
11	6/20/16	CHANGED PERMLIGHT LEDs TO GE	TRR	IK
12	12/10/14	ADDED HID FIXTURES TO BACK OF CANOPY	TRR	IK
13	11/14/17	CHANGED COLUMN TOP PLATES TO 1/2" FROM 1/4"	JO	IK
14	10/2/17	UPDATED E-CC5 SERIES LIGHT FIXTURES TO THE E-CSA04 SERIES LIGHT FIXTURES	JO	IK
15	6/29/17	REVISED FOUNDATION DETAILS & UPDATED LEDs & DOWNLIGHTS	JO	IK
16	11/16/10	ADDED NOTE TO PAINT LIGHT FIXTURE TRIM TO MATCH CANOPY	TRR	IK
17	7/30/10	ADDED CLEAR COAT NOTE	TRR	IK
18	6/1/09	ADDED CAP PLATE TO OCTAGON MOUNTING STUB CALLED SECURITY CAMERA TO BE BY OTHERS	TRR	IK
19	5/15/09	CHANGED CANOPY TO PSCO DESIGN	TRR	IK
20	9/11/19	CHANGED ROOF OCTAGON FACES TO CURVED STYLE. CHANGED ROOF OCTAGON MOUNTING TUBES TO .188" THICK FROM .125", CHANGED PLACEMENT OF J-BOXES IN APPROACH COLUMN FOR BETTER SERVICE ACCESS, EXTENDED FOUNDATION TO INCLUDE ELECT. PEDESTAL	TRR	IK

CHASE

These documents represent prototypical design drawings created specifically for use by J.P. Morgan Chase. Use of this unpublished work for any purpose other than the intended application is strongly discouraged. Disclosure or reproduction of any of the information contained within these documents without the written consent of the owner is strictly prohibited.

SHT. 8 OF 12

BY: TRR

DATE: 1/27/09

Project No. 08-1218

Drawing No. B244040

GRAPHICS DEPICTED ARE FOR ILLUSTRATIVE PURPOSES ONLY! USE ONLY APPROVED ARTWORK FOR PRODUCTION.

DESIGNATION: CAN-ATM-SIG-OCT

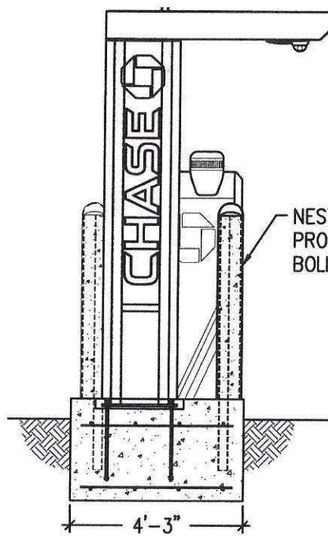

SIDE VIEW AT APPROACH COLUMN

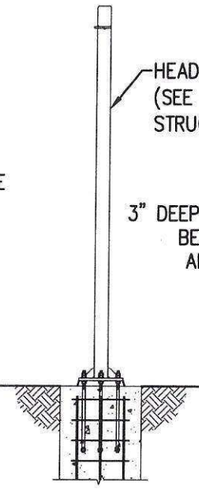

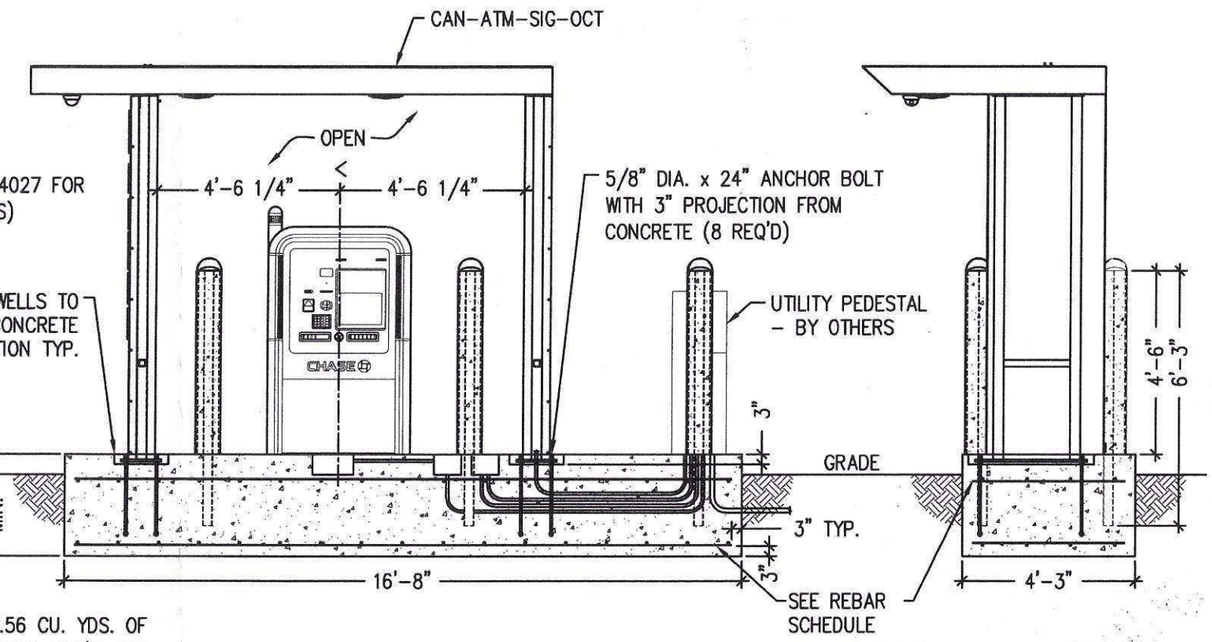

6.56 CU. YDS. OF CONC. REQ'D. MIN.

INSTALLATION ELEVATION

SIDE VIEW AT DEPARTURE COLUMN

WHERE THE EXTREME FROST PENETRATION DEPTH REQUIREMENT IS GREATER THAN THE SPECIFIED DEPTH OF THE FOUNDATION SHOWN ON THIS SHEET, THE FOUNDATION DESIGN SHOULD BE ALTERED TO MEET THE LOCAL FROST DEPTH REQUIREMENTS. SEE MAP ON SHEET 12 OF 12 FOR GENERAL DEPTH GUIDELINES.

REBAR SCHEDULE
SPREAD FOUNDATION

DO NOT WELD REBAR

PLACEMENT	SIZE	SPACING	QUANTITY
OVERTURN BOTTOM STEEL	#5	12"	17
OVERTURN TOP STEEL	#5	12"	17
BOTTOM CROSS STEEL	#5	13"	4
TOP CROSS STEEL	#5	13"	4

STATE OF MISSOURI
JEFF L. GRIFFIN
NUMBER
PE-28808
PROFESSIONAL ENGINEER
6/15/20

REV.	DATE	DESCRIPTION	BY:	APR:
F	2/18/11	CHANGED COLOR TO #MP-18246 DARK NICKEL. REMOVED WHITE OCTAGON ON SIGNATURE COLUMN. CHANGED OCTAGON ON APPROACH COLUMN TO FACES-WHAL BASE "CHASE" COPY STEP-REVERSE. CHANGED ROOF OCTAGON TO FACETED SIGNAL. CHANGED APPROACH COLUMN OCTAGON LEDS TO BLUE FROM WHITE.	TRR	IK
E	12/15/10	ADDED HEADACHE BAR ANCHOR DETAILS	TRR	IK
D	11/22/11	CHANGED DEPARTURE COLUMN COLOR TO #MP-18246 DARK NICKEL FROM #MP-46353 METALLIC BLUE	TRR	IK
C	8/31/11	REVISED OCTAGON ON ROOF TO CORRECT ORIENTATION OF LOGO ON DEPARTURE SIDE OF CANOPY	TRR	IK
B	4/1/11	CHANGED DESIGNATION FROM CAN-ATM TO CAN-ATM-SIG-OCT CHANGED CANOPY MOUNTING BOLTS FROM 3/8" DIA. TO 1/2" DIA.	TRR	IK
A	10/31/13	ADDED TACK WELD SYMBOL TO A.B. DETAILS	TRR	IK
1	7/23/12	REVISED APPROACH COLUMN FOR SERVICABILITY	TRR	IK
0	2/22/12	REVISED FOUNDATION	TRR	IK
P	9/6/16	CHANGED RUUD LIGHT FIXTURE TO CREE	TRR	IK
O	6/20/16	CHANGED PERMLIGHT LEDs TO GE	TRR	IK
N	12/10/14	ADDED HID FIXTURES TO BACK OF CANOPY	TRR	IK
5	11/14/17	CHANGED COLUMN TOP PLATES TO 1/2" FROM 1/4"	JO	IK
4	10/2/17	UPDATED E-CC5 SERIES LIGHT FIXTURES TO THE E-CSA04 SERIES LIGHT FICTURES	JO	IK
3	6/29/17	REVISED FOUNDATION DETAILS & UPDATED LEDs & DOWNLIGHTS	JO	IK
11	11/16/10	ADDED NOTE TO PAINT LIGHT FIXTURE TRIM TO MATCH CANOPY	TRR	IK
C	7/30/10	ADDED CLEAR COAT NOTE	TRR	IK
B	6/1/09	ADDED CAP PLATE TO OCTAGON MOUNTING STUB CALLED SECURITY CAMERA TO BE BY OTHERS	TRR	IK
A	5/15/09	CHANGED CANOPY TO PSCO DESIGN	TRR	IK
1	9/11/19	CHANGED ROOF OCTAGON FACES TO CURVED STYLE. CHANGED ROOF OCTAGON MOUNTING TUBES TO .188" THICK FROM .125". CHANGED PLACEMENT OF J-BOXES IN APPROACH COLUMN FOR BETTER SERVICE ACCESS. EXTENDED FOUNDATION TO INCLUDE ELECT. PEDESTAL	TRR	IK

CHASE

These documents represent prototypical design drawings created specifically for use by J.P. Morgan Chase. Use of this unpublished work for any purpose other than the intended application is strongly discouraged. Disclosure or reproduction of any of the information contained within these documents without the written consent of the owner is strictly prohibited.

SHT. 10 OF 12

BY: TRR

DATE: 1/27/09

Project No. 08-1218

Drawing No. B244040

GRAPHICS DEPICTED ARE FOR ILLUSTRATIVE PURPOSES ONLY! USE ONLY APPROVED ARTWORK FOR PRODUCTION.

DESIGNATION: CAN-ATM-SIG-OCT

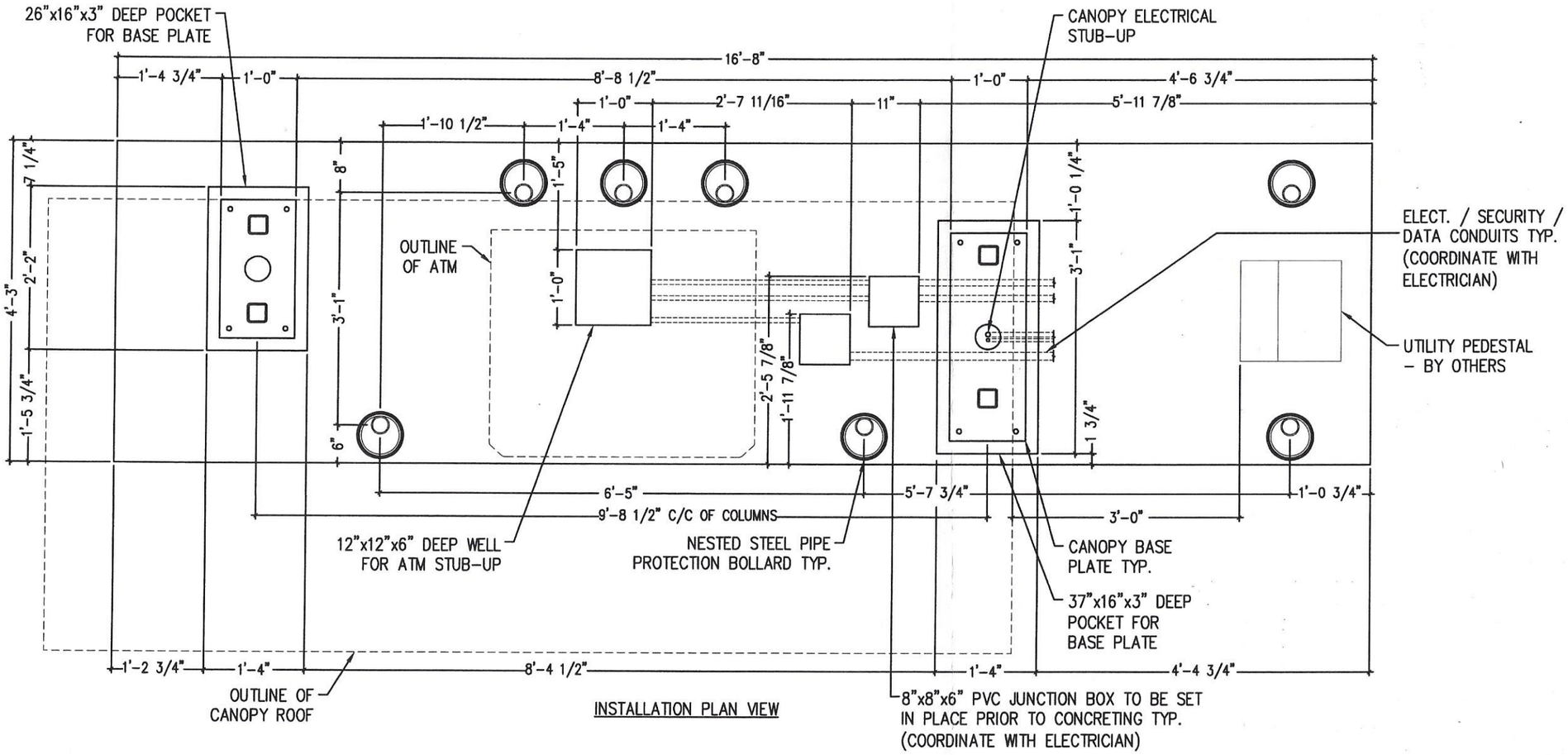

INSTALLATION PLAN VIEW

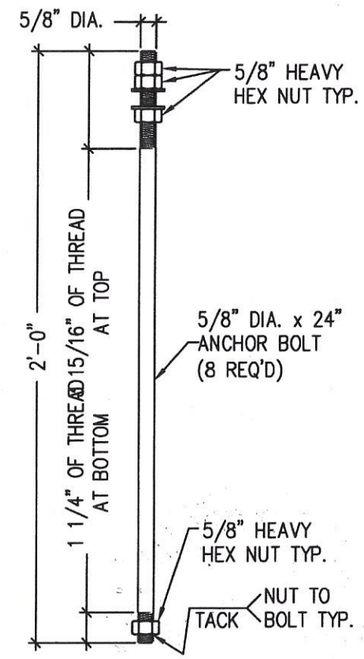

CANOPY ANCHOR BOLT DETAIL

JUNCTION BOXES AND CONDUITS ARE TO BE PROVIDED AND SET BY THE ELECTRICIAN PRIOR TO THE PLACEMENT OF CONCRETE.

STATE OF MISSOURI
JEFF L. GRIFFIN
25608
PROFESSIONAL ENGINEER
2/5/20

REV.	DATE	DESCRIPTION	BY:	APR:
F	2/18/11	CHANGED COLOR TO JMP-18240 DARK NICKEL, REMOVED THREE OCTAGONS ON DEPARTURE COLUMN, CHANGED OCTAGON ON APPROACH COLUMN TO PSCO-3003, BASE "MADE" COPY STEP-ALIGNED, CHANGED ROOF OCTAGON TO FACETED DESIGN, CHANGED APPROACH COLUMN OCTAGON LENS TO BLUE FROM WHITE.	TRR	IK
E	12/15/10	ADDED HEADACHE BAR ANCHOR DETAILS	TRR	IK
D	11/22/11	CHANGED DEPARTURE COLUMN COLOR TO JMP-18240 DARK NICKEL FROM JMP-46353 METALLIC BLUE	TRR	IK
H	8/31/11	REVISED OCTAGON ON ROOF TO CORRECT ORIENTATION OF LOGO ON DEPARTURE SIDE OF CANOPY	TRR	IK
G	4/1/11	CHANGED DESIGNATION FROM CAN-ATM TO CAN-ATM-SIG-OCT CHANGED CANOPY MOUNTING BOLTS FROM 3/8" DIA. TO 1/2" DIA.	TRR	IK
M	10/31/13	ADDED TACK WELD SYMBOL TO A.B. DETAILS	TRR	IK
L	7/23/12	REVISED APPROACH COLUMN FOR SERVICABILITY	TRR	IK
K	2/22/12	REVISED FOUNDATION	TRR	IK
P	9/6/16	CHANGED RUUD LIGHT FIXTURE TO CREE	TRR	IK
O	6/20/16	CHANGED PERMLIGHT LEDs TO GE	TRR	IK
N	12/10/14	ADDED HID FIXTURES TO BACK OF CANOPY	TRR	IK
S	11/14/17	CHANGED COLUMN TOP PLATES TO 1/2" FROM 1/4"	JO	IK
R	10/2/17	UPDATED E-CCS SERIES LIGHT FIXTURES TO THE E-CSA04 SERIES LIGHT FICTURES	JO	IK
Q	6/29/17	REVISED FOUNDATION DETAILS & UPDATED LEDs & DOWNLIGHTS	JO	IK
A	11/16/10	ADDED NOTE TO PAINT LIGHT FIXTURE TRIM TO MATCH CANOPY	TRR	IK
C	7/30/10	ADDED CLEAR COAT NOTE	TRR	IK
B	6/1/09	ADDED CAP PLATE TO OCTAGON MOUNTING STUB CALLED SECURITY CAMERA TO BE BY OTHERS	TRR	IK
A	5/15/09	CHANGED CANOPY TO PSCO DESIGN	TRR	IK
I	9/11/19	CHANGED ROOF OCTAGON FACES TO CURVED STYLE, CHANGED ROOF OCTAGON MOUNTING TUBES TO .188" THICK FROM .125", CHANGED PLACEMENT OF J-BOXES IN APPROACH COLUMN FOR BETTER SERVICE ACCESS, EXTENDED FOUNDATION TO INCLUDE ELECT. PEDESTAL	TRR	IK

CHASE

These documents represent prototypical design drawings created specifically for use by J.P. Morgan Chase. Use of this unpublished work for any purpose other than the intended application is strongly discouraged. Disclosure or reproduction of any of the information contained within these documents without the written consent of the owner is strictly prohibited.

SHT. 11 OF 12

BY: TRR

DATE: 1/27/09

Project No. 08-1218

Drawing No. B244040

GRAPHICS DEPICTED ARE FOR ILLUSTRATIVE PURPOSES ONLY! USE ONLY APPROVED ARTWORK FOR PRODUCTION.

DESIGNATION: CAN-ATM-SIG-OCT

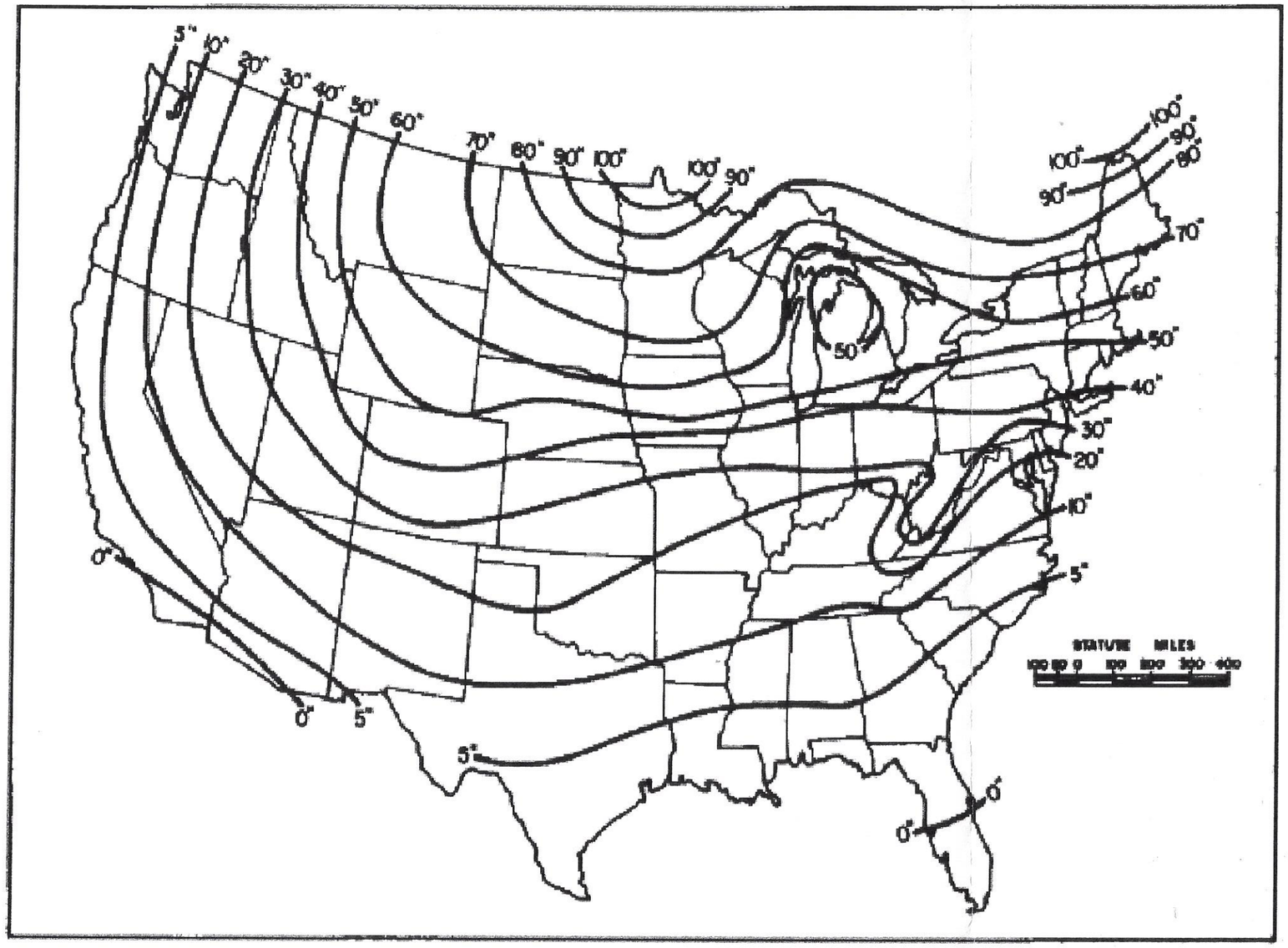

WHERE THE EXTREME FROST PENETRATION DEPTH REQUIREMENT IS GREATER THAN THE SPECIFIED DEPTH OF THE FOUNDATION SHOWN ON SHEET 10 OF 12, THE FOUNDATION DESIGN SHOULD BE ALTERED TO MEET THE LOCAL FROST DEPTH REQUIREMENTS. SEE MAP AT LEFT FOR GENERAL GUIDELINES.

FIGURE 7
Extreme Frost Penetration (in Inches) Based Upon State Average

STATE OF MISSOURI
JEFF L. GRIFFIN
NUMBER
PROFESSIONAL ENGINEER
6/5/20

7	2/18/11	CHANGED COLOR TO JMP-18248 DARK NICKEL, REMOVED WHITE OCTAGON ON DEPARTURE COLUMN, CHANGED OCTAGON ON APPROACH COLUMN TO FROSTED GLASS, "CHASE" COPY STEP-NOTED, CHANGED ROOF OCTAGON TO FACETED GLASS, CHANGED APPROACH COLUMN OCTAGON LENS TO BLUE FACN STYLE.	TRR	IK	6	11/22/11	CHANGED DEPARTURE COLUMN COLOR TO JMP-18248 DARK NICKEL FROM JMP-40353 METALLIC BLUE	TRR	IK	11	10/31/13	ADDED TACK WELD SYMBOL TO A.B. DETAILS	TRR	IK	16	9/6/16	CHANGED RUUD LIGHT FIXTURE TO CREE	TRR	IK	21	11/14/17	CHANGED COLUMN TOP PLATES TO 1/2" FROM 1/4"	JO	IK
					7	8/31/11	REVISED OCTAGON ON ROOF TO CORRECT ORIENTATION OF LOGO ON DEPARTURE SIDE OF CANOPY	TRR	IK	12	7/23/12	REVISED APPROACH COLUMN FOR SERVICABILITY	TRR	IK	17	6/20/16	CHANGED PERMLIGHT LEDs TO GE	TRR	IK	22	10/2/17	UPDATED E-CCS SERIES LIGHT FIXTURES TO THE E-CSA04 SERIES LIGHT FIXTURES	JO	IK
8	12/15/10	ADDED HEADACHE BAR ANCHOR DETAILS	TRR	IK	8	4/1/11	CHANGED DESIGNATION FROM CAN-ATM TO CAN-ATM-SIG-OCT CHANGED CANOPY MOUNTING BOLTS FROM 3/8" DIA. TO 1/2" DIA.	TRR	IK	13	2/22/12	REVISED FOUNDATION	TRR	IK	18	12/10/14	ADDED HID FIXTURES TO BACK OF CANOPY	TRR	IK	23	6/29/17	REVISED FOUNDATION DETAILS & UPDATED LEDs & DOWNLIGHTS	JO	IK

CHASE

These documents represent prototypical design drawings created specifically for use by J.P. Morgan Chase. Use of this unpublished work for any purpose other than the intended application is strongly discouraged. Disclosure or reproduction of any of the information contained within these documents without the written consent of the owner is strictly prohibited.

SHT.	BY:	Project No.
12	TRR	08-1218
OF 12	DATE: 1/27/09	Drawing No. B244040

REV.	DATE	DESCRIPTION	BY:	APR:
1	11/16/10	ADDED NOTE TO PAINT LIGHT FIXTURE TRIM TO MATCH CANOPY	TRR	IK
2	7/30/10	ADDED CLEAR COAT NOTE	TRR	IK
3	6/1/09	ADDED CAP PLATE TO OCTAGON MOUNTING STUB CALLED SECURITY CAMERA TO BE BY OTHERS	TRR	IK
4	5/15/09	CHANGED CANOPY TO PSCO DESIGN	TRR	IK

GRAPHICS DEPICTED ARE FOR ILLUSTRATIVE PURPOSES ONLY! USE ONLY APPROVED ARTWORK FOR PRODUCTION.

DESIGNATION:
CAN-ATM-SIG-OCT

20	9/11/19	CHANGED ROOF OCTAGON FACES TO CURVED STYLE, CHANGED ROOF OCTAGON MOUNTING TUBES TO .188" THICK FROM .125", CHANGED PLACEMENT OF J-BOXES IN APPROACH COLUMN FOR BETTER SERVICE ACCESS, EXTENDED FOUNDATION TO INCLUDE ELECT. PEDESTAL	TRR	IK

File : IconIdentSolut3389a.mcd

Site : Chase Bank
Location No. 64063
276 South West Blue Parkway
Lees Summit, Missouri 64063

Project : 9'-6 1/4" tall x 12'-10" wide x 5'-11 3/4" deep ATM canopy mounted to 6" above grade spread footing.
Drawing No. B244040 sheets 1 thru 12 of 12.

Design loads are based on the 2015 International Building Code (ASCE 7-10) using Exposure C and 115 mph wind speed.

Design Wind Speed : (mph.) $V := 115.0$ Based on Risk Category II

Velocity Pressure Coefficient at a Height of Less Than 15', Exposure C : $Kz := 0.85$ Based on Table 29.3-1

Topographic Factor : $Kzt := 1.00$ Based on Table 26.8-1

Wind Directionality Factor : $Kd := 0.85$ Based on Table 26.6-1

Velocity Pressure : (PSF) $qz := 0.00256 \cdot Kz \cdot Kzt \cdot Kd \cdot V^2$ $qz = 24.461$ Based on 29.3-1

Force Coefficient : $Cf := 1.80$ Based on Figure 29.4-1

Gust Effect Factor : $G := 0.85$ Based on 26.9.4 for Other Structures

Load Combination Factor : $LCF := 0.60$ Based on 2.4.1, Case 7

Design Pressure : (PSF) $F := qz \cdot Cf \cdot G \cdot LCF$ $F = 22.455$ Use : $WL := 22.5$

Design Snow Load : (PSF) $SL := 40.0$ Based on Ground Snow Loads.

Reference : Manual of Steel Construction, AISC 13th Edition.

Tube : ASTM A-500 Gr. B Fy = 46.0 ksi. ; Fb = 30.36 ksi. ; Fv = 18.40 ksi.

Plate : ASTM A-36 Fy = 36.0 ksi. ; Fb = 27.00 ksi. ; Fv = 14.40 ksi.

Mounting Bolts : ASTM A-325 Fu = 133.0 ksi. ; Ft = 44.00 ksi. ; Fv = 21.00 ksi.

Anchor Bolts : ASTM F-1554 Gr. 36 Fu = 58.0 ksi. ; Ft = 19.14 ksi. ; Fv = 14.40 ksi.

Reference : 2010 Aluminum Design Manual, The Aluminum Association

Tube : 6061-T6 Temper and Alloy Fy = 35.0 ksi. ; Fb = 30.72 ksi. ; Fv = 12.54 ksi.

Plate : 5052-H34 Temper and Alloy Fy = 26.0 ksi. ; Fb = 19.50 ksi. ; Fv = 10.40 ksi.

Jeff L. Griffin
12255 W. 187th St.
Mokena, IL 60448

Reference : American Concrete Institute, Code 318.14

Rebar : ASTM A-615 Grade 60 Fy = 60.0 ksi.

Concrete : 3,000 psi. compressive strength at 28 days.

STATE OF MISSOURI
JEFF L. GRIFFIN
NUMBER PE-28808
PROFESSIONAL ENGINEER
6/25/20

<u>Design Loads at EL. 9.02' :</u> (Canopy mounting connection.)

<u>Wind Load :</u>

Shear : (lbs.) $ShrWL := \left[\left(\frac{8.25}{12}\right) \cdot 12.83 \cdot WL\right]$ $ShrWL = 198.464$

Moment : (ft.lbs.) $MtWL := ShrWL \cdot \left(\frac{0.69}{2}\right)$ $MtWL = 68.47$

Offset Dead Load :

Shear : (lbs.) $ShrDL := (4.15 \cdot 12.83 \cdot 4.5)$ $ShrDL = 239.6$

Moment : (ft.lbs.) $MtDL := ShrDL \cdot \left[\left(\frac{4.15}{2}\right) + 0.92\right]$ $MtDL = 717.603$

Offset Snow Load :

Shear : (lbs.) $ShrSL := (4.15 \cdot 12.83 \cdot SL)$ $ShrSL = 2129.78$

Moment : (ft.lbs.) $MtSL := ShrSL \cdot \left[\left(\frac{4.15}{2}\right) + 0.92\right]$ $MtSL = 6378.691$

Combined Shear :

Summation : (ft.lbs.) $ShrEL9_{02} := ShrWL + ShrDL + ShrSL$ $ShrEL9_{02} = 2567.844$

Design of Canopy Support Tubes at EL. 9.02' : (Based on the smallest tube size member.)

Section Modulus of Tube - X Axis : (in.^{3}) 3" x 2" x 1/8" wall - $TubeSMXAxis := 0.966$

Moment per Tube - X Axis : (ft.lbs.) $MtTube_{xaxis} := \frac{MtDL + MtSL}{4}$ $MtTube_{xaxis} = 1774.073$

Bending Stress - X Axis : (psi.) $f_{bxaxis} := \frac{MtTube_{xaxis} \cdot 12}{TubeSMXAxis}$ $f_{bxaxis} = 22038.18$

Section Modulus of Tube - Y Axis : (in.^{3}) 3" x 2" x 1/8" wall - $TubeSMYAxis := 0.783$

Moment per Tube - Y Axis : (ft.lbs.) $MtTube_{yaxis} := \frac{MtWL}{4}$ $MtTube_{yaxis} = 17.118$

Bending Stress - Y Axis : (psi.) $f_{byaxis} := \frac{MtTube_{yaxis} \cdot 12}{TubeSMYAxis}$ $f_{byaxis} = 262.338$

Area of Tube : (in.^{2}) 3" x 2" x 1/8" wall - $TubeArea := 1.201$

Shear per Tube : (lbs.) $ShrTube := \frac{ShrEL9_{02}}{4}$ $ShrTube = 641.961$

Shear Stress : (psi.) $f_v := \frac{ShrTube}{TubeArea}$ $f_v = 534.522$

Unity Check :
Canopy Support Tubes $UCCnpy := \frac{f_{bxaxis}}{30720} + \frac{f_{byaxis}}{30720} + \frac{f_v}{12540}$ $UCCnpy = 0.769 < 1.00$ OK

Design of Canopy Mounting Bolts at EL. 9.33' :

Mounting Bolt Diameter : (in.) $MntBltDia := 0.50$

Stress Area : (in.^{2}) $MntBltArea := \frac{\pi \cdot MntBltDia^2}{4}$ $MntBltArea = 0.196$
(Based on nominal diameter per AISC 4-3)

Allowable Tension : (lbs.) $AllwTen := 44000 \cdot MntBltArea$ $AllwTen = 8639$

Allowable Shear : (lbs.) $AllwShr := 21000 \cdot MntBltArea$ $AllwShr = 4123$

Number of Mounting Bolts in Tension : $NoTen := 4$

Front to Back Distance Between Mounting Bolts : (in.) $LvrArm := 17.625$

Tension Load per Mounting Bolt : (lbs.) $TenMntBlt := \frac{(MtDL + MtSL)\cdot 12}{NoTen\cdot LvrArm}$ $TenMntBlt = 1207.88$

Number of Mounting Bolts in Shear : $NoShr := 8$

Shear Load per Mounting Bolt : (lbs.) $ShrMntBlt := \frac{ShrEL9_{02}}{NoShr}$ $ShrMntBlt = 320.98$

Unity Check : Mounting Bolts $UCMntBlt := \frac{TenMntBlt}{AllwTen} + \frac{ShrMntBlt}{AllwShr}$ $UCMntBlt = 0.218 < 1.00$ OK

Use : 1/2" diameter ASTM A-325 bolts and equivalent nuts and washers.

Design of Aluminum Canopy Mounting Plate at EL. 9.33' :

Plate Thickness : (in.) $PltThk := 0.50$ Plate Width : (in.) $PltWdth := 7.0$

Side to Side Distance Between Mounting Bolts : (in.) $BltSprd := 5.0$

Transfer Distance : (in.) $PLS := \frac{PltWdth - BltSprd}{2}$ $PLS = 1$

Number of Mounting Bolts in Tension per Plate : $NoTenPlt := 2$

Minimum Thickness Required : (in.) $ReqdThk := \sqrt{\left[\frac{TenMntBlt\cdot NoTenPlt\cdot PLS\cdot 6}{(PltWdth\cdot 19500)}\right]}$ $ReqdThk = 0.326$

Unity Check : Canopy Mounting Plate $UCCnpyPlt := \frac{ReqdThk}{PltThk}$ $UCCnpyPlt = 0.652 < 1.00$ OK

Design of Steel Column Top Plate at EL. 9.33' :

Plate Thickness : (in.) $PltThk := 0.50$ Plate Width : (in.) $PltWdth := 7.0$

Transfer Distance : (in.) $PLS := 1.375$ (Measured in AutoCAD to furthest distance.)

Minimum Thickness Required : (in.) $ReqdThk := \sqrt{\left[\frac{TenMntBlt\cdot NoTenPlt\cdot PLS\cdot 6}{(PltWdth\cdot 27000)}\right]}$ $ReqdThk = 0.325$

Unity Check : Column Top Plate $UCColmnPlt := \frac{ReqdThk}{PltThk}$ $UCColmnPlt = 0.649 < 1.00$ OK

Design Loads at Top of Footing :

Wind Load :

Canopy : $Cnpy := \left[\left(\frac{8.25}{12}\right)\cdot 12.83\cdot WL\right]\cdot\left[\left(\frac{0.69}{2}\right) + 8.83\right]$ $Cnpy = 1820.908$ ft.lbs.

Cladded Poles : (Based on the widest column.) $CldPoles := (2\cdot 8.83\cdot 2.90\cdot WL)\cdot\left(\frac{8.83}{2}\right)$ $CldPoles = 5087.471$ ft.lbs.

Moment : (ft.lbs.) $MtWL := Cnpy + CldPoles$ $MtWL = 6908.378$

Shear : (lbs.) $ShrWL := \left[\left(\frac{8.25}{12}\right)\cdot 12.83\cdot WL\right] + (2\cdot 8.83\cdot 2.90\cdot WL)$ $ShrWL = 1350.779$

Offset Dead Load : (Based on 1'-10" deep column.)

Shear : (lbs.) $ShrDL := (4.15\cdot 12.83\cdot 6.5)$ $ShrDL = 346.089$

Summation : (ft.lbs.) $MtDL := ShrDL\cdot\left(\frac{4.15}{2}\right)$ $MtDL = 718.135$

Offset Snow Load : (Based on 1'-10" deep column.)

Shear : (lbs.) $ShrSL := (4.15\cdot 12.83\cdot SL)$ $ShrSL = 2129.78$

Moment : (ft.lbs.) $MtSL := ShrSL\cdot\left(\frac{4.15}{2}\right)$ $MtSL = 4419.294$

Combined Moment :

Summation : (ft.lbs.) $MtTOF := MtWL + MtDL + MtSL$ $MtTOF = 12045.807$

Combined Shear :

Summation : (ft.lbs.) $ShrTOF := ShrWL + ShrDL + ShrSL$ $ShrTOF = 3826.648$

Design of Pole Structures at Top of Footing :

Section Modulus of Tube : (in.^{3}) HSS 3" x 3" x 3/16" wall - $TubeSM := 1.64$

Moment per Column : (ft.lbs.) $MtColumn := \frac{MtTOF}{2}$ $MtColumn = 6022.904$

Moment per Tube : (ft.lbs.) $MtTube := \frac{MtColumn}{2}$ $MtTube = 3011.452$

Bending Stress : (psi.) $f_b := \frac{MtTube\cdot 12}{TubeSM}$ $f_b = 22035.013$

Area of Tube : (in.^{2}) HSS 3" x 3" x 3/16" wall - $TubeArea := 1.89$

Shear per Column : (lbs.) $ShrColumn := \frac{ShrTOF}{2}$ $ShrColumn = 1913.324$

Shear per Tube : (lbs.) $ShrTube := \frac{ShrColumn}{2}$ $ShrTube = 956.662$

Shear Stress : (psi.) $f_v := \frac{ShrTube}{TubeArea}$ $f_v = 506.17$

Unity Check - Poles : $UCPoles := \frac{f_b}{30360} + \frac{f_v}{18400}$ $UCPoles = 0.753$ $<$ 1.00 OK

Design of Anchor Bolts at Top of Footing :

Anchor Bolt Diameter : (in.) $AncBltDia := 0.625$

Stress Area : (in.^{2}) $AncBltArea := \frac{\pi\cdot AncBltDia^2}{4}$ $AncBltArea = 0.307$
(Based on nominal diameter per AISC 4-3)

Allowable Tension : (lbs.) $AllwTen := 19140 \cdot AncBltArea$ $AllwTen = 5872$

Allowable Shear : (lbs.) $AllwShr := 14400 \cdot AncBltArea$ $AllwShr = 4418$

Number of Anchor Bolts in Tension per Plate : $NoTen := 2$

Front to Back Distance Between Anchor Bolts : (in.) $LvrArm := 19.0$
(Based on approach support - shortest lever arm.)

Tension Load per Anchor Bolt : (lbs.) $TenAncBlt := \frac{MtColumn \cdot 12}{NoTen \cdot LvrArm}$ $TenAncBlt = 1901.97$

Number of Anchor Bolts in Shear : $NoShr := 4$

Shear Load per Anchor Bolt : (lbs.) $ShrAncBlt := \frac{ShrColumn}{NoShr}$ $ShrAncBlt = 478.33$

Unity Check : Anchor Bolts $UCAncBlts := \frac{TenAncBlt}{AllwTen} + \frac{ShrAncBlt}{AllwShr}$ $UCAncBlts = 0.432 < 1.00$ OK

Allowable Bond Stress : (lbs./ in.^{2}) $U := \left(\frac{1}{2}\right) \cdot \left(\frac{4.8 \cdot \sqrt{3000}}{AncBltDia}\right)$ $U = 210.325$

Developement Length : (in.) $Ld := \frac{TenAncBlt}{U \cdot \pi \cdot AncBltDia}$ $Ld = 4.606$

Embedment Length : (in.) $AncBltEmb := 24 - 3$ $AncBltEmb = 21$
(24" length minus 3" of thread projection.)

Unity Check : Anchor Bolt Embedment $UCABEmb := \frac{Ld}{AncBltEmb}$ $UCABEmb = 0.219 < 1.00$ OK

Use : Four (4) 5/8" Dia. x 24" long anchor bolts with 3" top thread and 1-1/2" bottom thread.

Design of Approach Column Base Plate :

Plate Thickness : (in.) $PltThk := 0.625$ Plate Width : (in.) $PltWdth := 12.0$

Transfer Distance : (in.) $PLS := \sqrt{\left(3.0^2 + 1.0^2\right)}$ $PLS = 3.162$

Minimum Thickness Required : (in.) $ReqdThk := \sqrt{\left[\frac{TenAncBlt \cdot NoTen \cdot PLS \cdot 6}{(PltWdth \cdot 27000)}\right]}$ $ReqdThk = 0.472$

Unity Check - Base Plate : (Approach column.) $UCBasePlt := \frac{ReqdThk}{PltThk}$ $UCBasePlt = 0.755 < 1.00$ OK

Use : 7/8" thick x 12" x 22" base plate with four (4) 3/4" diameter holes on a 9" x 19" bolt pattern.

Design of Departure Column Base Plate :

Plate Thickness : (in.) $PltThk := 0.625$ Plate Width : (in.) $PltWdth := 12.0$

Transfer Distance : (in.) $PLS := \sqrt{\left(3.0^2 + 2.125^2\right)}$ $PLS = 3.676$

Minimum Thickness Required : (in.) $ReqdThk := \sqrt{\left[\frac{TenAncBlt \cdot NoTen \cdot PLS \cdot 6}{(PltWdth \cdot 27000)}\right]}$ $ReqdThk = 0.509$

Unity Check - Base Plate : (Departure column.) $UCBasePlt := \frac{ReqdThk}{PltThk}$ $UCBasePlt = 0.814$ < 1.00 OK

Use : 5/8" thick x 12" x 33" base plate with four (4) 3/4" diameter holes on a 9" x 30" bolt pattern.

Design of Spread Footing :

Loads :

Moment : (ft.lbs.)	$Ma := MtTOF$	$Ma = 12045.807$
Shear : (lbs.)	$Va := ShrTOF$	$Va = 3826.648$

Allowables :

Lateral passive pressure against foundation : (lbs./sq.ft. per foot)	$PP := 100$
Static soil pressure : (lbs./sq.ft.)	$SSP := 1500$
Dynamic soil pressure : (lbs./sq.ft.)	$DSP := 2000$

Foundation parameters :

Depth of footing below grade : (ft.)		$DF := 2.0$
Height of footing : (ft.)		$HF := 2.5$
Width of footing : (ft.)		$WF := 16.67$
Length of footing : (ft.) (Wind direction)		$LF := 4.25$
Height of footing above grade : (ft.)	$Ht := HF - DF$	$Ht = 0.5$

Weight of structure and foundation :

Design weight of concrete : (lbs./cu.ft.)		$CWT := 150$
Kiosk weight : (lbs.)		$SWT := 450$
ATM weight : (lbs.)		$PWT := 850$
Footing weight : (lbs.)	$FTWT := HF \cdot WF \cdot LF \cdot CWT$	$FTWT = 26567.813$
Net weight : (lbs.)	$NETWT := SWT + PWT + FTWT$	$NETWT = 27867.813$

Check Factor of Safety :

Overturning moment about heel point of foundation : (ft.lbs.)

$Mo := Va \cdot HF + Ma$ $Mo = 21612.428$

Total passive pressure on footing : (lbs./sq.ft.) $Tpp := PP \cdot DF^2 \cdot \left(\frac{WF}{2}\right)$ $Tpp = 3334$

Resisting moment about the heel point : (ft.lbs.)

$Mr := NETWT \cdot \left(\frac{LF}{2}\right) + Tpp \cdot \left(\frac{DF}{3}\right)$ $Mr = 61441.768$

Factor of Safety : $FS := \frac{Mr}{Mo}$ $FS = 2.843$ > 1.5 OK

Check soil bearing pressures :

Static soil pressure : (lbs./sq.ft.) $SBP := \frac{NETWT}{LF \cdot WF}$ $SBP = 393.349 < SSP = 1500$ OK

Dynamic soil pressure : (lbs./sq.ft.)

$$e := \frac{\left[Mo - Tpp \cdot \left(\frac{HF}{3}\right)\right]}{NETWT} \qquad e = 0.676$$

$$\left(\frac{LF}{2}\right) = 2.125 > e = 0.676 > \left(\frac{LF}{6}\right) = 0.708$$

$$qa := \left[\frac{2 \cdot NETWT}{3 \cdot WF \cdot \left[\left(\frac{LF}{2}\right) - e\right]}\right] \qquad qa = 769.057 < DSP = 2000$$ OK

Check tensile stress of concrete at pole :

Compressive Strength of Concrete : (psi.) $fc := 3000$

Overturning moment at pole : (ft.lbs./ft.) $Mp := \left(\frac{LF}{2}\right)^2 \cdot \left(\frac{qa}{2}\right)$ $Mp = 1736.387$

Section modulus of footing - Per foot of width : (in.^{3}) $Sw := 12 \cdot \frac{(HF \cdot 12)^2}{6}$ $Sw = 1800$

Tensile stress in concrete : (psi.) $ft := \frac{(Mp \cdot 12)}{Sw}$ $ft = 11.576$

Allowable stress in concrete : (psi.) $\phi Ft := 0.65 \cdot (5 \cdot \sqrt{fc})$ $\phi Ft = 178.01 > ft = 11.576$

REBAR NOT REQUIRED FOR STRESS

Design of temperature and shrinkage steel :

Rebar size : $Number := 5$

Rebar Area : (in.^{2}) $Area := \frac{\pi \cdot \left(\frac{Number}{8}\right)^2}{4}$ $Area = 0.31$

For length of footing : $Asl := 0.0016 \cdot HF \cdot WF \cdot 144$ $Asl = 9.602$

Number required : $\frac{Asl}{Area} = 31.297$ Use seventeen (17) #5 Rebar x 3'-9" LG. equally spaced top and bottom using 3" typical clear. (Thirty-four (34) total required.)

For width of footing : $Asw := 0.0016 \cdot HF \cdot LF \cdot 144$ $Asw = 2.448$

Number required : $\frac{Asw}{Area} = 7.979$ Use four (4) #5 Rebar x 13'-0" LG. equally spaced top and bottom using 3" typical clear. (Eight (8) total required.)

Quantity of concrete : (yds.^{3}) $Cy := \left[\frac{(LF \cdot WF \cdot HF)}{27}\right]$ $Cy = 6.56$