4/7/2020 11:01:30 AM

HCA MIDWEST HEALTH

LEE'S SUMMIT MEDICAL CENTER

LEE'S SUMMIT MEDICAL CENTER HYBRID OR ADDITION

2100 SE Blue Parkway
Lee's Summit, MO 64063

P R O J E C T T E A M

ARCHITECT
ACI BOLAND, INC.

1710 Wyandotte Street
Kansas City, MO 64108

PHONE 816.763.9600
FAX 816.763.9757

STRUCTURAL, MECHANICAL, ELECTRICAL, & PLUMBING CONSULTANT
Professional Engineering Consultants, P.A.

623 Massachusetts Street, Suite 200
Lawrence, KS 66044

PHONE 785.842.6464

ABBREVIATIONS

AC.	ACOUSTIC/ACOUSTICAL
ADD.	ADDENDUM
ADD'N.	ADDITION
ABC	AGGREGATE BASE COURSE
AFF	ABOVE FINISH FLOOR
AGG.	AGGREGATE
A/C	AIR CONDITIONING
AL.	ALUMINUM
ALT.	ALTERNATE
A.B.	ANCHOR BOLT
&	AND
ARCH.	ARCHITECT
ASP.	ASPHALT
@	AT
ACT	ACOUSTIC CEILING TILE/PANEL
∠	ANGLE
BLKG.	BLOCKING
BSMT.	BASEMENT
BM.	BEAM
B.M.	BENCHMARK
BD.	BOARD
B.O.	BOTTOM OF
BLDG.	BUILDING
CAB'T.	CABINET
C.I.P.	CAST IN PLACE
C.B.	CATCH BASIN
CLG.	CEILING
CEM.	CEMENT/CEMENTITIOUS
CG.	CENTIGRAM
CM	CENTIMETER
CL.	CENTER LINE
CER.	CERAMIC
C.T.	CERAMIC TILE
CHAN.	CHANNEL
C.	CHANNEL
CLR.	CLEAR
C.O.	CLEAN OUT
CLOS.	CLOSET
COL.	COLUMN
CONC.	CONCRETE
CONN.	CONNECTION
CONST.	CONSTRUCTION
C.J.	CONTROL JOINT
	CONSTRUCTION JOINT
CONT.	CONTINUOUS
CONTR.	CONTRACTOR
CORRG.	CORRUGATED
CTR.	COUNTER
CTSK.	COUNTERSUNK
C.M.U.	CONCRETE MASONRY UNIT
D.P.	DAMP PROOFING
DB.	DECIBEL
DIAG.	DIAGONAL
DIAM.	DIAMETER
DIM.	DIMENSION
DISP.	DISPENSER
DWL.	DOWEL
DN.	DOWN
D.S.	DOWNSPOUT
DWG.	DRAWING
EA.	EACH
ELEC	ELECTRIC
E.W.C.	ELECTRIC WATER COOLER
EL.	ELEVATION
ELEV.	ELEVATOR
EQ.	EQUAL
EQUIP.	EQUIPMENT
EXH.	EXHAUST
EXPAN.	EXPANSION
E.J.	EXPANSION JOINT
EXIST.	EXISTING
EXT.	EXTERIOR
FT.	FEET / FOOT
FIN.	FINISH
FIXT.	FIXTURE
FL.	FLASHING
FLR.	FLOOR
F.D.	FLOOR DRAIN
FLOR.	FLUORESCENT
FTG.	FOOTING
FND.	FOUNDATION
FR.	FRAME
F.H.C.	FIRE HOSE CAB.
FV.	FIELD VERIFY
GA.	GAUGE
GL.	GLASS / GLAZING
GD.	GRADE
G.	GRAM
GRL.	GRILLE
GRD.	GRID
GND.	GROUND
G.S.	GALVANIZED STEEL
GYP.	GYPSUM
GWB/G.B.	GYPSUM BOARD
H.R.	HAND RAIL
HDN.	HARDENER
HDW.	HARDWARE
HDWD.	HARDWOOD
HTR.	HEATER
HT.	HEIGHT
H.P.	HIGH POINT
H.M.	HOLLOW METAL
HORIZ.	HORIZONTAL
H.B.	HOSE BIB
H.W.	HOT WATER
IN.	INCH / INCHES
I.D.	INSIDE DIAMETER
INSUL.	INSULATION
INT.	INTERIOR
INV.	INVERT
JAN.	JANITOR
JT.	JOINT
JST.	JOIST
K.P.	KICK PLATE
LAM.	LAMINATED
LB.	POUND
LDG.	LANDING
LTH.	LATH
LAV.	LAVATORY
LG.	LENGTH
LOC.	LOCATION
LT.	LIGHT
L.W.C.	LIGHT WEIGHT CONCRETE
LVR.	LOUVER
LOC.	LOCATION
M.O.	MASONRY OPENING
MAT'L..	MATERIAL
MFR.	MANUFACTURER
MB.	MARKER BOARD
MAX.	MAXIMUM
MECH.	MECHANICAL
MTL.	METAL
M.L.	METAL LATH
M.	METER
MIN.	MINIMUM
MLDG.	MOLDING
MULL.	MULLION
N.G.	NATURAL GRADE
NOM.	NOMINAL
N.I.C.	NOT IN CONTRACT
N.T.S.	NOT TO SCALE
NO. / #	NUMBER
OBS.	OBSCURE
O.C.	ON CENTER
OPN'G.	OPENING
O.A.	OVERALL
O.D.	OUTSIDE DIAMETER
O.F.S.	OVERFLOW SCUPPER
O.F.D.	OVERFLOW DRAIN
O.H.D.	OVERHEAD DOOR
PTD.	PAINTED
PG.	PAGE
PLAM.	PLASTIC LAMINATE
PR.	PAIR
PNL.	PANEL
PTN.	PARTITION
¢	PENNY
PL.	PLATE
PLBG.	PLUMBING
PLYWD.	PLYWOOD
PT.	POINT
P.S.I.	POUNDS PER SQ. IN.
P.S.F.	POUNDS PER SQ. FT.
P.C.	PRECAST
P.L.	PROPERTY LINE
R.	RISER, RISERS
RAD.	RADIUS
R.D.	ROOF DRAIN
RB.	RESILIENT BASE
RE.	REFER TO
REG.	REGISTER
REQ'D.	REQUIRED
REV.	REVISION
RF'G.	ROOFING
RGH.	ROUGH
RM.	ROOM
RND.	ROUND
R.O.	ROUGH OPENING
SCHED.	SCHEDULE
S.C.	SEALED CONCRETE
SCR.	SCREW
SECT.	SECTION
SEL.	SELECT
SHG.	SHEATHING
SHT.	SHEET
SDG.	SIDING
SIM.	SIMILAR
SLDG.	SLIDING
SM.	SMOOTH
SPEC.	SPECIFICATION
SQ.	SQUARE
ST.	STAINED
STD.	STANDARD
S.S. / ST.STL.	STAINLESS STEEL
STRUC.	STRUCTURE
SUSP.	SUSPENDED
SW.BD.	SWITCHBOARD
SYS.	SYSTEM
T.	TREAD
T.C.	TOP OF CURB
T.G.	TEMPERED GLASS
T.O.	TOP OF
T.S.D.	TOP OF STEEL DECK
T.W.	TEACHERS WARDROBE
TYP.	TYPICAL
U.O.N.	UNLESS OTHERWISE NOTED
V.	VENT
VERT.	VERTICAL
V.G.	VERTICAL GRAIN
VEST.	VESTIBULE
V.C.T.	VINYL COMPOSITION TILE
VCP	VITREOUS CLAY PIPE
W.W.M.	WELDED WIRE MESH
W.C.	WATER CLOSET
W.H.	WATER HEATER
W.F.	WIDE FLANGE
W/	WITH
W/O	WITHOUT
WD.	WOOD
WDW.	WINDOW
W.W.	WINDOW WALL

LOCATION PLAN

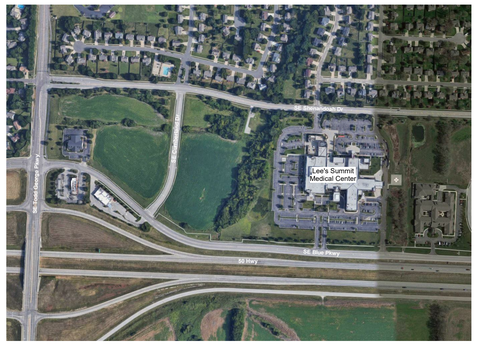

2 SITE LOCATION
1" = 400'-0"
NORTH

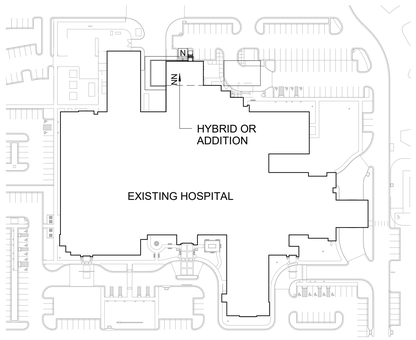

1 SITE PLAN
1" = 100'-0"
NORTH

GENERAL NOTES

1. ALL WORK SHALL BE PERFORMED IN ACCORDANCE WITH A.D.A. REQUIREMENTS AND ALL APPLICABLE LOCAL, STATE, AND FEDERAL BUILDING CODES AND REGULATIONS.
2. THE CONTRACTOR IS RESPONSIBLE FOR OBTAINING ALL NECESSARY BUILDING PERMITS.
3. THE GENERAL CONTRACTOR AND SUBCONTRACTORS SHALL FIELD VERIFY EXISTING CONDITIONS AND NOTIFY THE ARCHITECT OF ANY INCONSISTENCIES OR DISCREPANCIES WTH THE PROJECT DOCUMENTS. ACCESS TO THE SITE AND/OR SPACE UNDER CONSTRUCTION DURING BIDDING AND CONSTRUCTION SHALL BE COORDINATED WITH THE OWNER.
4. DO NOT SCALE DRAWINGS.
5. THE WORD "ALIGN" AS USED IN THESE DOCUMENTS SHALL SUPERSEDE ANY DIMENSIONAL INFORMATION GIVEN.
6. TYPICAL DIMENSIONS ARE TO FACE OF CONCRETE, DRYWALL, CURTAIN WALL, ETC., OR TO COLUMN CENTERLINE. DIMENSIONS AT WINDOWS ARE TYPICALLY TO FACE OF FRAME. REFER TO PLAN DETAILS FOR ADDITIONAL INFORMATION.
7. THE GENERAL CONTRACTOR SHALL BE RESPONSIBLE FOR EXAMINING AND CONFIRMING ALL SUBSTRATE CONDITIONS WHERE NEW MATERIALS ARE APPLIED. THE SUBSTRATE SHALL BE SMOOTH AND FREE OF DEFECTS AND SHALL CONFORM TO THE REQUIREMENTS OF THE FINISHED MATERIAL MANUFACTURERS RECOMMENDATIONS.
8. THE GENERAL CONTRACTOR SHALL BE RESPONSIBLE FOR CLEAN-UP.
9. THE GENERAL CONTRACTOR SHALL INSPECT AND CHECK THE ADEQUACY AND INSTALLATION OF THROUGH-WALL FLASHING PRIOR TO COVERING WITH FINISH MATERIALS. THIS SHALL INCLUDE, BUT IS NOT LIMITED TO INSPECTION AGAINST HOLES OR PENETRATIONS, APPROPRIATE LAPPING AND SEALING, AND OVERALL WORKMANSHIP IN CONFORMANCE WITH THE SPECIFICATIONS.

SHEET INDEX

SHEET NUMBER	SHEET NAME
GENERAL	
A0.1	COVER SHEET
A0.2	LIFE SAFETY PLAN
A0.3	PARTITION TYPES AND DETAILS
A0.4	U.L. DESIGN ASSEMBLIES
A0.5	U.L. DESIGN ASSEMBLIES
CIVIL	
C100	SITE PLAN
DEMOLITION	
AD1.1	DEMOLITION PLAN
ARCHITECTURE	
A2.0	SITE PLAN
A2.1	FIRST FLOOR DIMENSION PLAN
A2.2	ROOF PLAN
A3.1	FIRST FLOOR REFLECTED CEILING PLAN
A4.1	DOOR AND FRAME SCHEDULE AND DETAILS
A4.2	ROOM FINISH SCHEDULE & FINISH LEGEND
A5.1	EXTERIOR ELEVATIONS
A6.1	WALL SECTIONS
A6.2	WALL SECTIONS
A7.1	INTERIOR ELEVATIONS
A7.2	INTERIOR DETAILS
F1.1	EQUIPMENT PLAN
STRUCTURAL	
S0.1	STRUCTURAL GENERAL NOTES
S0.2	INSPECTION TABLES
S1.1	FOUNDATION PLAN
S2.1	ROOF FRAMING PLAN
S3.1	COLUMN SCHEDULE
S3.2	BRACE FRAME SCHEDULE & DETAILS
S4.1	FOUNDATION DETAILS
S5.1	TYPICAL FRAMING DETAILS
MECHANICAL	
MP1.0	MECHANICAL COVER SHEET
M1.0	HVAC FLOOR PLANS
M2.0	MECHANICAL HYDRONICS AND ROOF PLAN
M3.0	MECHANICAL DETAILS
M3.1	MECHANICAL DETAILS
M4.0	CONTROL DIAGRAMS
M4.1	CONTROL DIAGRAMS
M5.0	MECHANICAL SCHEDULES
M5.1	MECHANICAL SCHEDULES
MD1.0	HVAC DEMOLITION FLOOR PLAN
MR1.0	AIRFLOW DIAGRAM
PLUMBING	
P-1.0	PLUMBING FLOOR PLAN
P-1.1	MEDICAL GAS FLOOR PLAN
PD-1.0	PLUMBING DEMOLITION FLOOR PLAN
ELECTRICAL	
E0.1	ELECTRICAL LEAD SHEET
E0.2	ELECTRICAL ONE LINE DIAGRAM
E0.3	ELECTRICAL SCHEDULES
E0.4	ELECTRICAL DETAILS
E1.1	ELECTRICAL ONE LINE DIAGRAM
E4.1	POWER PLAN 1ST FLOOR OVERALL
E4.2	ENLARGED POWER PLAN
E4.3	ENLARGED EQUIPMENT PLAN
E5.1	ENLARGED LIGHTING PLAN
E6.1	SYSTEMS PLAN
E6.2	ENLARGED SYSTEMS PLAN
FIRE PROTECTION	
FP1.10	FIRE PROTECTION FLOOR PLAN

STATE OF MISSOURI
Victor L. Mosby
Number
A-6471
REGISTERED ARCHITECT
3-23-2020

Victor L. Mosby Architect
License - Missouri #A-6471

ACI BOLAND ARCHITECTS
1710 Wyandotte
Kansas City, MO 64108
T: 816.763.9600

ACI/Boland, Inc.
Kansas City | St. Louis
Licensee's Certificate of Authority Number:

STRUCTURAL, MECHANICAL, ELECTRICAL, & PLUMBING CONSULTANT
Professional Engineering Consultants, P.A.

623 Massachusetts Street, Suite 200
Lawrence, KS 66044

Licensee's Certificate of Authority Number:

Phone Number: 785.842.6464

Lee's Summit Medical Center
Hybrid OR Addition
2100 SE Blue Parkway
Lee's Summit, MO 64063

Date	3-23-2020
Job Number	3-19058
Drawn By	CL
Checked By	KC

Revision

Number	Date	Description
1	4/6/2020	Permit Comments

A0.1

© 2020 ACI/BOLAND, Inc

COVER SHEET

C:\Users\kcrane\Documents\3-19058_LSMC Hybrid OR_Arch_kcrane.rvt

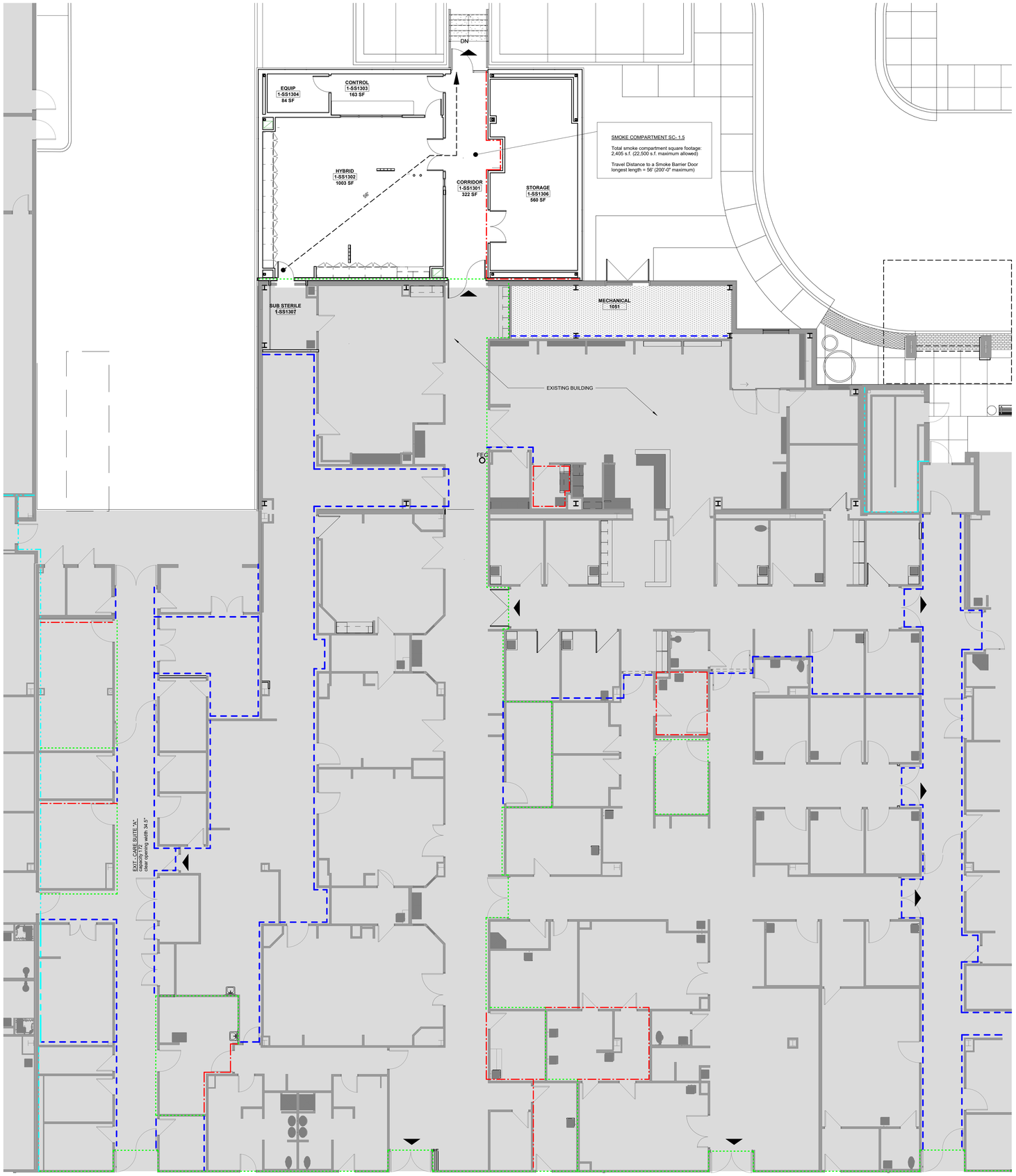

A1 LIFE SAFETY PLAN
1/8" = 1'-0"

NORTH

LIFE SAFETY LEGEND

	EXIT
FEC	NEW FIRE EXTINGUISHER CABINET
FEC	EXISTING FIRE EXTINGUISHER CABINET
	NOT IN SCOPE
	0 HR SMOKE PARTITION (SMOKE RESISTIVE)
	1 HR SMOKE BARRIER
	1 HR FIRE BARRIER
	2 HR FIRE BARRIER
	2 HR FIRE SMOKE BARRIER
	3 HR FIRE BARRIER

CODE SUMMARY

Project Construction Purpose: OR ADDITION

Code Information
2018 International Building Code
2018 International Plumbing Code
2018 International Mechanical Code
2018 International Fuel Gas Code
2018 International Fire Code
2017 National Electrical Code (NFPA 70)
2012 Life Safety Code (NFPA 101)
2010 ADA Standards for Accessible Design / 1990 Americans with Disabilities Act
2014 Facilities Guidelines Institute- Guidelines Design and Construction of Hospitals
ICC/ANSI A117.1-2009 Accessible and Usable Buildings and Facilities

Note: If code requirements overlap, the most stringent shall apply.

Owner Information
Lee's Summit Medical Center
2100 SE Blue Parkway
Lee's Summit, MO 64063
Phone: (816) 282-5000

Designer Information
ACI Boland Architects
1710 Wyandotte St.
Kansas City, MO 64108
Phone: (816) 763-9600

Local Authority
Responding Fire Service: Lee's Summit Fire Department
Local Building Inspection: City of Lee's Summit

Occupancy Group: I-2 - Institutional (Hospital)
Area of Addition - 2,405 S.F.

Occupant Load:
Total Number of Occupants = 17 (Addition)

Type of Construction: Type 1B (NFPA 222)

Required Fire Resistance Ratings (in hours)
Per NFPA 101 A.8.2.1.2:

Exterior Bearing Walls	2 HR
Interior Bearing Walls (Supporting Roof Only)	1 HR
Primary Structural Frame (Supporting Roof Only)	1 HR
Floor Construction	2 HR
Roof Construction	1 HR
Interior non-bearing walls	0 HR

Active Fire Safety Features:
- Fire Alarm System - The fire alarm system is specified as an addressable type system. The device type and locations are per the applicable codes as well as ADA requirements.

- Smoke Control System - All ductwork penetrating smoke rated walls will have a smoke or combination fire/smoke damper as indicated on construction documents. These dampers will close upon detection of smoke by the area smoke detectors or duct smoke detectors in the air handling units.

- Fire Sprinkler System - Specified to be per NFPA 13. The sprinkler heads are specified to be quick response type.

- Emergency Lighting and Power - Emergency lighting, life safety and critical loads will receive power from a backup generator located outside the main electrical room.

- Illuminated Exit Signs

Passive Fire Safety Features:

- Smoke Compartments no greater than 22,500 SF

OCCUPANT LOAD

ROOM NAME	AREA	OCC LOAD	OCCUPANTS
STORAGE	560 SF	300	2
EQUIP	84 SF	300	1
SUB STERILE	104 SF	300	1
HYBRID	1003 SF	100	11
CONTROL	163 SF	100	2
CORRIDOR	322 SF	0	
Grand total			17

STATE OF MISSOURI
Victor L. Mosby
Number
A-6471
REGISTERED ARCHITECT
3-23-2020

Victor L. Mosby Architect
License - Missouri #A-6471

ACI BOLAND ARCHITECTS
1710 Wyandotte
Kansas City, MO 64108
T: 816.763.9600

ACI/Boland, Inc.
Kansas City | St. Louis
Licensee's Certificate of Authority Number:

STRUCTURAL, MECHANICAL, ELECTRICAL, & PLUMBING CONSULTANT

Professional Engineering Consultants, P.A.

623 Massachusetts Street, Suite 200
Lawrence, KS 66044

Licensee's Certificate of Authority Number:

Phone Number: 785.842.6464

Lee's Summit Medical Center

Hybrid OR Addition
2100 SE Blue Parkway
Lee's Summit, MO 64063

Date	3-23-2020
Job Number	3-19058
Drawn By	CL
Checked By	KC

Revision

Number	Date	Description

A0.2

© 2020 ACI/BOLAND, Inc

LIFE SAFETY PLAN

3/25/2020 4:19:03 PM

C:\Users\clauer\Documents\3-19058_LSMC Hybrid OR_Arch_clauerV7TDN7.rvt

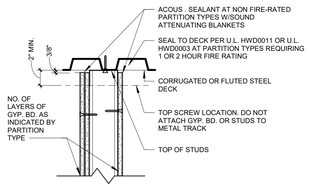

2 TOP ANCHORAGE OF PARTITION TO METAL DECK
1-1/2" = 1'-0"

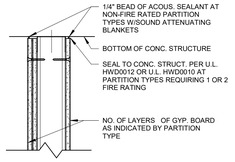

3 TOP ANCHORAGE OF PARTITION TO CONCRETE STRUCTURE SEE 3A AND 3B FOR ADDITIONAL INFORMATION
1-1/2" = 1'-0"

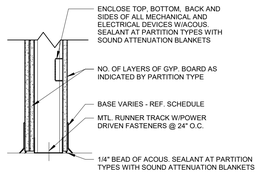

7 FLOOR ANCHORAGE OF PARTITION
1-1/2" = 1'-0"

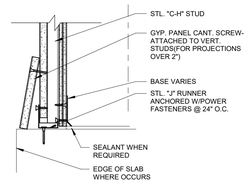

8 FLOOR ANCHORAGE OF SHAFT WALL
1-1/2" = 1'-0"

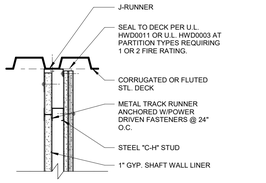

9 TOP ANCHORAGE OF CAVITY SHAFT WALL
1-1/2" = 1'-0"

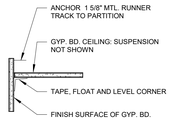

10 SUSPENDED GYP. BD. CEILING
1-1/4" = 1'-0"

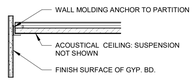

11 CEILING DETAILS FOR GYP. BD. VERTICAL SURFACES
1-1/4" = 1'-0"

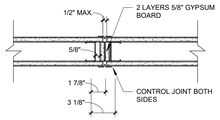

13 ONE HOUR RATED CONTROL JOINT WHI-495-PSV-0824
1-1/2" = 1'-0"

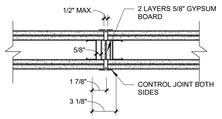

14 TWO HOUR RATED CONTROL JOINT WHI-495-PSV-0824
1-1/2" = 1'-0"

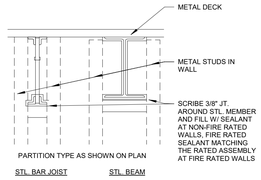

15 PARTITION CLOSURE DETAIL AT STEEL STRUCTURE
1-1/2" = 1'-0"

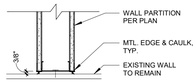

16 TYP. DETAIL @ NEW/EXISTING GYP. BD. WALL
1-1/2" = 1'-0"

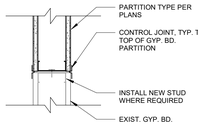

17 TYP. DETAIL @ NEW/EXISTING GYP. BD. WALL INFILL
1-1/2" = 1'-0"

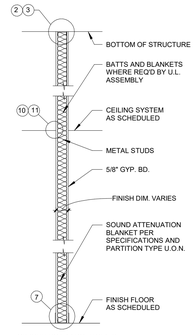

A GYPSUM BOARD BOTH SIDES
NON-RATED - TYPICAL
1/2" = 1'-0"

U.L. DESIGNATIONS AT RATED WALLS AS INDICATED ON LIFE SAFETY PLAN

1 HOUR FIRE SEPARATION	U.L. U465 FOR 3 5/8" STUDS U.L. U442 AT TILED WALLS U.L. U451 FOR 2 1/2" STUDS

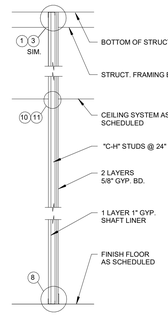

F GYPSUM BOARD CAVITY SHAFT WALL
RATED - UNLESS OTHERWISE NOTED
1/2" = 1'-0"

U.L. DESIGNATIONS AT RATED WALLS AS INDICATED ON LIFE SAFETY PLAN

1 HOUR FIRE SEPARATION	U.L. U469
2 HOUR FIRE SEPARATION	U.L. U438

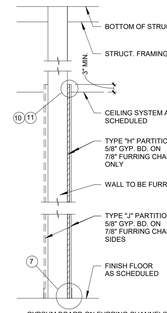

H GYPSUM BOARD ON FURRING CHANNELS, ONE SIDE
1/2" = 1'-0"

J GYPSUM BOARD ON FURRING CHANNELS, BOTH SIDE
1/2" = 1'-0"

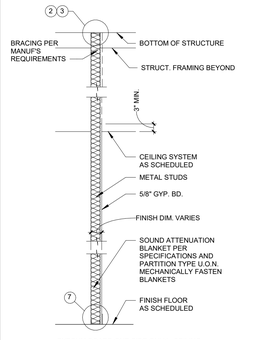

K GYPSUM BOARD ONE SIDE ONLY, CEILING HEIGHT
1/2" = 1'-0"

L GYPSUM BOARD ONE SIDE ONLY, FULL HEIGHT
1/2" = 1'-0"

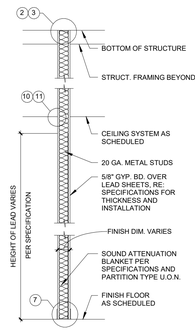

N LEAD LINED PARTITION
1/2" = 1'-0"

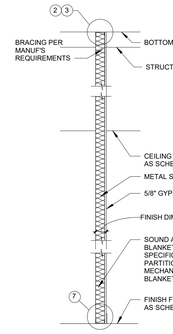

V LEAD LINED - GYPSUM BOARD ONE SIDE ONLY, FULL HEIGHT
1/2" = 1'-0"

PARTITION GENERAL NOTES

1. UNLESS NOTED OTHERWISE, ALL INTERIOR METAL STUDS ARE 3 5/8" THICK. REFER TO SUFFIX SCHEDULE BELOW FOR LOCATIONS OF METAL STUDS OTHER THAN 3-5/8" THICK. NOTE: STUD THICKNESS (GAUGE) MUST CONFORM TO MANUFACTURER'S RECOMMENDATIONS FOR SPAN (HEIGHT OF STUD)
2. WHERE THE PARTITION TYPE INDICATION IS SHOWN WITH A NUMERICAL SUFFIX, THE METAL STUD THICKNESS SHALL BE AS SCHEDULED BELOW:

SUFFIX	MTL. STUD THICKNESS
1	1-5/8" MTL. STUDS
2	2-1/2" MTL. STUDS
3	6" MTL. STUDS

3. UNLESS NOTED OTHERWISE, ALL INTERIOR DRYWALL PARTITIONS INDICATED ON THE FLOOR PLAN DRAWING ARE TYPE 'A' PARTITIONS. WHERE OCCURS, RATINGS ARE AS INDICATED ON THE LIFE SAFETY PLANS.
4. UNLESS NOTED OTHERWISE, ALL CMU PARTITIONS ARE 7-5/8", 8" NOMINAL. REFER TO SUFFIX SCHEDULE BELOW FOR LOCATIONS OF CMU PARTITIONS OTHER THAN 8" NOMINAL.
5. WHERE THE PARTITION TYPE INDICATION IS SHOWN WITH A NUMERICAL SUFFIX, THE CMU THICKNESS SHALL BE AS SCHEDULED BELOW:

SUFFIX	CMU THICKNESS
1	ACTUAL 3-5/8", 4" NOMINAL
2	ACTUAL 5-5/8", 6" NOMINAL
3	ACTUAL 11-5/8", 12" NOMINAL

6. UNLESS NOTED OTHERWISE, ALL INTERIOR MASONRY PARTITIONS INDICATED ON THE FLOOR PLAN DRAWING ARE TYPE 'B' PARTITIONS. WHERE OCCURS, RATINGS ARE AS INDICATED ON THE LIFE SAFETY PLANS.
7. ALL STUDS ARE CONTINUOUS FROM FLOOR STRUCTURE TO CEILING STRUCTURE UNLESS NOTED OTHERWISE.
8. METAL STUDS ARE SPACED @ 16" O.C. MAX., UNLESS NOTED OTHERWISE.
9. UNLESS NOTED OTHERWISE, ALL GYPSUM BOARD IS TO BE 5/8" THICK "FIRECODE".
10. THE LOCATION OF A CHANGE IN THE PARTITION TYPE IS INDICATED BY A WALL TAG.

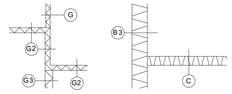

11. THE CORRESPONDING RATED ASSEMBLIES ARE INDICATED BELOW THE PARTITION TYPES.
12. PARTITION TYPE DESIGNATIONS ARE INDICATED ON THE FLOOR PLAN DRAWINGS.
13. PARTITION TYPES DO NOT INCLUDE APPLIED FINISHES CALLED FOR IN THE ROOM FINISH SCHEDULE.
14. AT PARTITION TYPES WHERE MTL. STUDS ARE EXPOSED ON ONE OR BOTH SIDES, CUT STUD 1/4" SHORT AND SCREW BOTH SIDES TO MTL. RUNNER TRACK.

SPECIALTY EQUIPMENT SCHEDULE

TYPE MARK	DESCRIPTION	RESPONSIBILITY	COMMENTS E-XX
E0945	WORKSTATION, MOBILE	OFOI	POWER AS REQUIRED.
K1910	STAINLESS STEEL TABLE	OFOI	
M0013	INFECTIOUS WASTE BASKET	OFOI	
M0630	ANESTHESIA APPARATUS, 3 GAS	OFOI	
M1801	COMPUTER	OFOI	POWER AS REQUIRED.
M3110	BLANKET WARMER	OFOI	POWER AS REQUIRED.
M4255	IV STAND	OFOI	
M8880	ANESTHESIA CART	OFOI	
M8910	SURGICAL CASE CART	OFOI	
M9110	SURGICAL TABLE	OFOI	POWER AS REQUIRED.
U1000	IMAGE 40E CABINET	VFVI	RE: VENDOR DRAWINGS
U1001	PERIPHERAL 40E CABINET	VFVI	RE: VENDOR DRAWINGS
U1002	CERTERAY iX GENERATOR CABINET	VFVI	RE: VENDOR DRAWINGS
U1003	MAINS 40E CABINET	VFVI	RE: VENDOR DRAWINGS
U1004	REMOTE ALARM SYSTEM PANEL	VFCI	RE: VENDOR DRAWINGS
U1005	INTRASIGHT WORKSTATION	VFVI	RE: VENDOR DRAWINGS
U1006	CONTROL ROOM CONNECTION BOX	VFVI	RE: VENDOR DRAWINGS
U1007	REMOTE INJECTOR PANEL	VFVI	RE: VENDOR DRAWINGS
U1008	INJECTOR CONSOLE	VFVI	RE: VENDOR DRAWINGS
U1009	C-ARC STAND	VFVI	RE: VENDOR DRAWINGS
U1010	ANGIO DIAGNOST 7 W/ TILT, PIVOT, AND CRADLE	VFVI	RE: VENDOR DRAWINGS
U1011	SWITCH BOX	VFCI	RE: VENDOR DRAWINGS
U1012	AUXILIARY BOX	VFVI	RE: VENDOR DRAWINGS
U1013	LONGITUDINAL STATIONARY RAIL	VFVI	RE: RCP & VENDOR DRAWINGS
U1014	LONGITUDINAL DRIVE BELT	VFVI	RE: RCP & VENDOR DRAWINGS
U1015	CEILING MOUNTED OR LIGHTS/MONITOR BOOM	VFVI	RE: RCP & VENDOR DRAWINGS
U1016	CEILING MOUNTED OR LIGHTS/MONITOR BOOM	VFVI	RE: RCP & VENDOR DRAWINGS
U1017	CEILING MOUNTED OR LIGHTS/MONITOR BOOM	VFVI	RE: RCP & VENDOR DRAWINGS

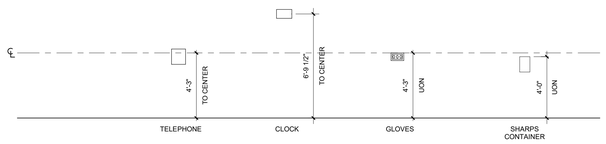

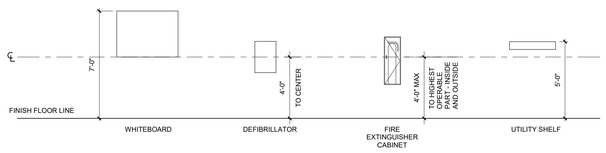

EQUIPMENT MOUNTING HEIGHTS
1/4" = 1'-0"

GENERAL NOTES:

1. REFER TO A0.5 FOR ACCESSIBLITY GUIDELINES AND ADDITIONAL MOUNTING HEIGHTS:
2. ANY OBJECTS PROJECTING MORE THAN 4 INCHES FROM THE FINISHED FACE OF WALL INTO A CIRCULATION PATH SHALL NOT HAVE A HEAD CLEARANCE OF LESS THAN 80" (6'-8").
3. GENERAL CONTRACTOR TO INSTALL FIRE RETARDANT WOOD BLOCKING FOR ALL EQUIPMENT OVER 50LBS AND FIRE RETARDANT PLYWOOD FOR EQUIPMENT UNDER 50 LBS; AS REQUIRED FOR THE MOUNTING OF ALL EQUIPMENT.

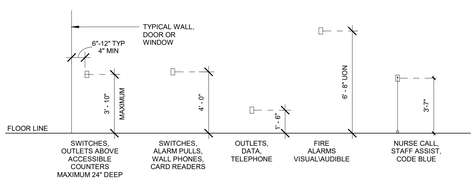

ELECTRICAL DEVICE MOUNTING HEIGHTS
1/4" = 1'-0"

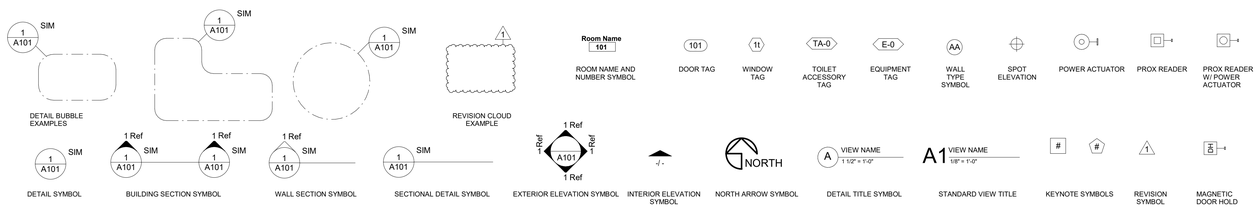

SYMBOLS
1/4" = 1'-0"

STATE OF MISSOURI
Victor L. Mosby
Number A-6471
REGISTERED ARCHITECT
3-23-2020
Victor L. Mosby, Architect
License - Missouri #A-6471

ACI BOLAND ARCHITECTS
1710 Wyandotte
Kansas City, MO 64108
T: 816.763.9600

ACI/Boland, Inc.
Kansas City | St. Louis
Licensee's Certificate of Authority Number:

STRUCTURAL, MECHANICAL, ELECTRICAL, & PLUMBING CONSULTANT

Professional Engineering Consultants, P.A.

623 Massachusetts Street, Suite 200
Lawrence, KS 66044

Licensee's Certificate of Authority Number:

Phone Number: 785.842.6464

Lee's Summit Medical Center
Hybrid OR Addition
2100 SE Blue Parkway
Lee's Summit, MO 64063

Date	3-23-2020
Job Number	3-19058
Drawn By	CL, BR
Checked By	KC

Revision

Number	Date	Description

A0.3

© 2020 ACI/BOLAND, Inc

PARTITION TYPES AND DETAILS

3/25/2020 4:19:06 PM

C:\Users\clauer\Documents\3-19058_LSMC Hybrid OR_Arch_clauer\TDN7.rvt

3/25/2020 4:19:08 PM

ONLINE CERTIFICATIONS DIRECTORY

Design No. U465
BXUV.U465
Fire-resistance Ratings - ANSI/UL 263

Page Bottom

Design/System/Construction/Assembly Usage Disclaimer

- Authorities Having Jurisdiction should be consulted in all cases as to the particular requirements covering the installation and use of UL Certified products, equipment, system, devices, and materials.
- Authorities Having Jurisdiction should be consulted before construction.
- Fire resistance assemblies and products are developed by the design submitter and have been investigated by UL for compliance with applicable requirements. The published information cannot always address every construction nuance encountered in the field.
- When field issues arise, it is recommended the first contact for assistance be the technical service staff provided by the product manufacturer noted for the design. Users of fire resistance assemblies are advised to consult the general Guide Information for each product category and each group of assemblies. The Guide Information includes specifics concerning alternate materials and alternate methods of construction.
- Only products which bear UL's Mark are considered Certified.

BXUV - Fire Resistance Ratings - ANSI/UL 263

BXUV7 - Fire Resistance Ratings - CAN/ULC-S101 Certified for Canada

See General Information for Fire-resistance Ratings - ANSI/UL 263

See General Information for Fire Resistance Ratings - CAN/ULC-S101 Certified for Canada

Design No. U465

August 25, 2016

Nonbearing Wall Rating — 1 HR.

*** Indicates such products shall bear the UL or cUL Certification Mark for jurisdictions employing the UL or cUL Certification (such as Canada), respectively.**

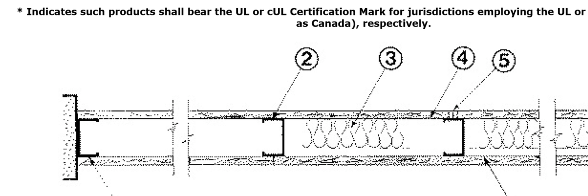

1. **Floor and Ceiling Runners —** (Not Shown) — Channel shaped runners, 3-5/8 in. deep (min), 1-1/4 in. legs, formed from min No. 25 MSG galv steel, attached to floor and ceiling with fasteners spaced 24 in. OC max.

1A. **Framing Members* — Floor and Ceiling Runners —** (Not Shown) — As an alternate to Item 1 — Channel shaped, min 3-5/8 in. deep, attached to floor and ceiling with fasteners 24 in. OC. max.

ALLSTEEL & GYPSUM PRODUCTS INC — Type SUPREME Framing System

CONSOLIDATED FABRICATORS CORP, BUILDING PRODUCTS DIV — Type SUPREME Framing System

QUAIL RUN BUILDING MATERIALS INC — Type SUPREME Framing System

SCAFCO STEEL STUD MANUFACTURING CO — Type SUPREME Framing System

STEEL CONSTRUCTION SYSTEMS INC — Type SUPREME Framing System

UNITED METAL PRODUCTS INC — Type SUPREME Framing System

1B. **Framing Members* — Floor and Ceiling Runners —** Not Shown — In lieu of Item 1 — For use with Item 2B, proprietary channel shaped runners, 1-1/4 in. wide by min 3-5/8 in. deep fabricated from min 0.020 in. thick galv steel, attached to floor and ceiling with fasteners spaced 24 in. OC max.

CALIFORNIA EXPANDED METAL PRODUCTS CO — Viper20™ Track

CRACO MFG INC — SmartTrack20™

MARINO/WARE, DIV OF WARE INDUSTRIES INC — Viper20™ Track

1C. **Floor and Ceiling Runners —** (Not Shown) — For use with Item 2C — Channel shaped, fabricated from min 20 MSG corrosion-protected or galv steel, min depth to accommodate stud size, with min 1 in. long legs, attached to floor and ceiling with fasteners spaced max 24 in. OC.

1D. **Framing Members* — Floor and Ceiling Runners —** Not Shown — In lieu of Items 1 through 1C — For use with Item 2D and 4G only, proprietary channel shaped runners, 1-1/4 in. deep by min 3-5/8 in. wide fabricated from min 0.018 in. thick galv steel, attached to floor and ceiling with fasteners spaced 24 in. OC max.

CLARKDIETRICH BUILDING SYSTEMS — CD ProTRAK

DMFCWBS L L C — ProTRAK

MBA METAL FRAMING — ProTRAK

RAM SALES L L C — Ram ProTRAK

STEEL STRUCTURAL PRODUCTS L L C — Tri-S ProTRAK

1E. **Framing Members* — Floor and Ceiling Runners —** Not Shown — In lieu of Items 1 through 1D — For use with Item 2E and 4I only, proprietary channel shaped runners, 1-1/4 in. deep by min 3-5/8 in. wide fabricated from min 0.018 in. thick galv steel, attached to floor and ceiling with fasteners spaced 24 in. OC max.

TELLING INDUSTRIES L L C — TRUE-TRACK™

1F. **Framing Members* — Floor and Ceiling Runners —** Not Shown — In lieu of Items 1 through 1E — For use with Item 2, channel shaped runners, 1-1/4 in. deep by min 3-5/8 in. wide fabricated from min 25 MSG steel, attached to floor and ceiling with fasteners spaced 24 in. OC max.

KIRII (HONG KONG) LTD — Type KIRII

1G. **Framing Members* — Floor and Ceiling Runners —** Not Shown — In lieu of Items 1 through 1F — For use with Item 2, channel shaped runners, 1-1/4 in. deep by min 3-5/8 in. wide, attached to floor and ceiling with fasteners spaced 24 in. OC max.

STUDCO BUILDING SYSTEMS — CROCSTUD Track

1H. **Floor and Ceiling Runners —** (Not Shown) — Channel shaped, fabricated from min 0.02 in. galv steel, min width to accommodate stud size, with min 1 in. long legs, for use with studs specified below and fabricated from min 0.02 in. galv steel or thicker, attached to floor and ceiling with fasteners spaced max 24 in. OC.

MARINO/WARE, DIV OF WARE INDUSTRIES INC — Viper20™ Track VT100

1I. **Framing Members* — Floor and Ceiling Runners —** Not Shown — In lieu of Item 1 — For use with Item 2H, proprietary channel shaped runners, 1-1/4 in. wide by min 3-5/8 in. deep fabricated from min 0.020 in. thick galv steel, attached to floor and ceiling with fasteners spaced 24 in. OC max.

TELLING INDUSTRIES L L C — Viper20™ Track

2. **Steel Studs —** Channel shaped, 3-5/8 in. deep (min), formed from min No. 25 MSG galv steel spaced 24 in. OC max. Studs to be cut 3/4 in. less than assembly height.

2A. **Framing Members* — Steel Studs —** As an alternate to Item 2 — Channel shaped studs, min 3-5/8 in. deep, spaced a max of 24 in. OC. Studs to be cut 3/4 in. less than assembly height.

ALLSTEEL & GYPSUM PRODUCTS INC — Type SUPREME Framing System

CONSOLIDATED FABRICATORS CORP, BUILDING PRODUCTS DIV — Type SUPREME Framing System

QUAIL RUN BUILDING MATERIALS INC — Type SUPREME Framing System

SCAFCO STEEL STUD MANUFACTURING CO — Type SUPREME Framing System

STEEL CONSTRUCTION SYSTEMS INC — Type SUPREME Framing System

UNITED METAL PRODUCTS INC — Type SUPREME Framing System

2B. **Framing Members* — Steel Studs —** Not Shown — In lieu of Item 2 — For use with Item 1B, proprietary channel shaped steel studs, 1-1/4 in. wide by min 3-5/8 in. deep fabricated from min 0.020 in. thick galv steel. Studs cut 3/4 in. less in length than assembly height.

CALIFORNIA EXPANDED METAL PRODUCTS CO — Viper20™

CRACO MFG INC — SmartStud20™

MARINO/WARE, DIV OF WARE INDUSTRIES INC — Viper20™

2C. **Steel Studs —** (As an alternate to Item 2, For use with Item 4E) — Channel shaped, fabricated from min 20 MSG corrosion-protected or galv steel, 3-1/2 in. min depth, spaced a max of 16 in. OC. Studs friction-fit into floor and ceiling runners. Studs to be cut 5/8 to 3/4 in. less than assembly height.

2D. **Framing Members* — Steel Studs —** As an alternate to Items 2 through 2C — For use with Item 1D and 4G only, channel shaped studs, min 3-5/8 in. wide fabricated from min 0.018 in. thick galv steel, spaced a max of 24 in. OC. Studs to be cut 1/2 in. less than assembly height.

CLARKDIETRICH BUILDING SYSTEMS — CD ProSTUD

DMFCWBS L L C — ProSTUD

MBA METAL FRAMING — ProSTUD

RAM SALES L L C — Ram ProSTUD

STEEL STRUCTURAL PRODUCTS L L C — Tri-S ProSTUD

2E. **Framing Members* — Steel Studs —** As an alternate to Items 2 through 2D — For use with Item 1E and 4I only, channel shaped studs, min 3-5/8 in. wide fabricated from min 0.018 in. thick galv steel, spaced a max of 24 in. OC. Studs to be cut 1/2 in. less than assembly height.

TELLING INDUSTRIES L L C — TRUE-STUD™

2F. **Framing Members* — Steel Studs —** As an alternate to Items 2 through 2E — For use with Item 1F, channel shaped studs, min 3-5/8 in. wide fabricated from min 25 MSG steel, spaced a max of 24 in. OC. Studs to be cut 1/2 in. less than assembly height.

KIRII (HONG KONG) LTD — Type KIRII

2G. **Framing Members* — Steel Studs —** Not Shown — In lieu of Item 2 through 2F — For use with Item 1G. Proprietary channel shaped studs, minimum 3-5/8 in. wide, Studs to be cut 1/2 in. less than the assembly height.

STUDCO BUILDING SYSTEMS — CROCSTUD

2H. **Framing Members* — Steel Studs —** Not Shown — In lieu of Item 2 — For use with Item 1I, proprietary channel shaped steel studs, 1-1/4 in. wide by min 3-5/8 in. deep fabricated from min 0.020 in. thick galv steel. Studs cut 3/4 in. less in length than assembly height.

TELLING INDUSTRIES L L C — Viper20™

2I. **Framing Members* — Steel Studs —** In lieu of Item 2 — For use with Item 1, channel shaped studs, fabricated from min 25 MSG corrosion-protected steel, 3-5/8 in. deep (min), spaced 24 in. OC max. Studs to be cut 3/4 in. less than assembly height.

EB MéTAL INC — EB Stud

2J. **Framing Members* — Steel Studs —** In lieu of Item 2 — For use with Item 1, channel shaped studs, fabricated from min 25 MSG corrosion-protected steel, 3-5/8 in. deep (min), spaced 24 in. OC max. Studs to be cut 3/4 in. less than assembly height.

OLMAR SUPPLY INC — PRIMESTUD

2K. **Framing Members* — Steel Studs —** As an alternate to Item 2 — For use with Item 1B (3-5/8 in. wide track), channel shaped studs, fabricated from min 25 MSG corrosion-protected steel, 1-1/4 in. wide by 3-5/8 in. deep, spaced a max of 24 in. OC. Studs to be cut 3/8 to 3/4 in. less than assembly height.

MARINO/WARE, DIV OF WARE INDUSTRIES INC — StudRite™

3. **Batts and Blankets* —** (Optional) — Mineral wool or glass fiber batts partially or completely filling stud cavity.

See **Batts and Blankets** (BZJZ) category for names of Classified companies.

3A. **Fiber, Sprayed* —** As an alternate to Batts and Blankets (Item 3) — (100% Borate Formulation) — Spray applied cellulose material. The fiber is applied with water to completely fill the enclosed cavity in accordance with the application instructions supplied with the product with a nominal dry density of 2.7 lb/ft³. Alternate Application Method: The fiber is applied without water or adhesive at a nominal dry density of 3.5 lb/ft³, in accordance with the application instructions supplied with the product.

U S GREENFIBER L L C — INS735& INS745 for use with wet or dry application. INS765LD and INS770LD are to be used for dry application only

3B. **Fiber, Sprayed* —** As an alternate to Batts and Blankets (Item 3) and Item 3A — Spray applied cellulose insulation material. The fiber is applied with water to interior surfaces in accordance with the application instructions supplied with the product. Applied to completely fill the enclosed cavity. Minimum dry density of 4.3 pounds per cubic ft.

NU-WOOL CO INC — Cellulose Insulation

3C. **Fiber, Sprayed* —** As an alternate to Batts and Blankets (Item 3) — Spray applied cellulose fiber. The fiber is applied with water to completely fill the enclosed cavity in accordance with the application instructions supplied with the product. The minimum dry density shall be 4.30 lbs/ft³.

INTERNATIONAL CELLULOSE CORP — Celbar-RL

3D. **Batts and Blankets* —** For use with Item 8. Nom 3 in. thick, minimum 3.4 pcf mineral wool batts, friction fit between the studs and floor and ceiling runners.

See **Batts and Blankets** (BZJZ) category for names of manufacturers.

3E. **Batts and Blankets* —** For use with Item 4P. Placed in stud cavities, any min. 3-1/2 in. thick glass fiber insulation bearing the UL Classification Marking as to Surface Burning Characteristics and/or Fire Resistance.

See **Batts and Blankets** (BKNV or BZJZ) Categories for names of Classified companies.

4. **Gypsum Board* —** 5/8 in. thick, 4 ft wide, attached to steel studs and floor and ceiling track with 1 in. long, Type S steel screws spaced 8 in. OC. along edges of board and 12 in. OC in the field of the board. Joints oriented vertically and staggered on opposite sides of the assembly. When attached to Items 6 (resilient channels) or 6A, 6B or 6C (furring channels), gypsum board is screw attached to furring channels with 1 in. long, Type S steel screws spaced 12 in. OC.

ACADIA DRYWALL SUPPLIES LTD — Type X, 5/8 Type X, Type Blueglass Exterior Sheathing

AMERICAN GYPSUM CO — Types AG-C, AGX-1, M-Glass

BEIJING NEW BUILDING MATERIALS PUBLIC LTD CO — Type DBX-1

CGC INC — Types AR, C, IP-AR, IP-X1, IP-X2, IPC-AR, SCX, SHX, USGX, WRC or WRX (Joint tape and compound, Item 5, optional for use with Type USGX)

CERTAINTEED GYPSUM INC — Types 1, EGRG, GlasRoc, Type X, Type X-1, Type C, SilentFX, 5/8" Easi-Lite Type X

CONTINENTAL BUILDING PRODUCTS OPERATING CO, L L C — Types LGFC2A, LGFC6A, LGFC-C/A, LGFC-WD, LGLLX

GEORGIA-PACIFIC GYPSUM L L C — Types 5, 6, 9, C, DAP, DD, DA, DAPC, DGG, DS, GPFS6, LS, Type X, Veneer Plaster Base - Type X, Water Rated - Type X, Sheathing - Type X, Soffit - Type X, TG-C, GreenGlass Type X, Type X ComfortGuard Sound Deadening Gypsum Board, Type LWX, Veneer Plaster Base-Type LWX, Water Rated-Type LWX, Sheathing Type-LWX, Soffit-Type LWX, Type DGLW, Water Rated-Type DGLW, Sheathing Type- DGLW, Soffit-Type DGLW, Type LW2X, Veneer Plaster Base - Type LW2X, Water Rated - Type LW2X, Sheathing - Type LW2X, Soffit - Type LW2X, Type DGL2W, Water Rated - Type DGL2W, Sheathing - Type DGL2W

NATIONAL GYPSUM CO — Types eXP-C, FSK, FSK-C, FSK-G, FSMR-C, FSW-C, FSW-G, FSW, FSW-3, FSW-5, FSW-6, FSW-8, FSL

PABCO BUILDING PRODUCTS L L C, DBA PABCO GYPSUM — Types PG-C, PG-9, PG-11, PGS-WRS

PANEL REY S A — Types GREX, PRC, PRC2, PRX, RHX, MDX, ETX

SAINT-GOBAIN GYPROC MIDDLE EAST FZE — Type Gyproc FireStop, Gyproc FireStop MR, Gyproc FireStop M2TECH, Gyproc FireStop ACTIV'Air, Gyproc FireStop MR ACTIV'Air, Gyproc FireStop M2TECH ACTIV'Air, Gyproc DuraLine, Gyproc DuraLine MR, Gyproc DuraLine M2TECH, Gyproc DuraLine ACTIV'Air, Gyproc DuraLine MR ACTIV'Air, Gyproc DuraLine M2TECH ACTIV'Air

SIAM GYPSUM INDUSTRY (SARABURI) CO LTD — Type EX-1

THAI GYPSUM PRODUCTS PCL — Type X, Type C

UNITED STATES GYPSUM CO — Type AR, C, FRX-G, IP-AR, IP-X1, IP-X2, IPC-AR, SCX, SHX, WRC, WRX, USGX (Joint tape and compound, Item 5, optional for use with Type USGX)

USG BORAL ZAWAWI DRYWALL L L C SFZ — Types C, SCX

USG MEXICO S A DE C V — Type AR, C, IP-AR, IP-X1, IP-X2, IPC-AR, SCX, SHX, USGX, WRC or WRX (Joint tape and compound, Item 5, optional for use with Type USGX)

4A. **Gypsum Board* —** (As alternate to Item 4) — Nom 5/8 in. thick gypsum panels with beveled, square or tapered edges, applied vertically or horizontally. Vertical joints centered over studs and staggered one stud cavity on opposite sides of studs. Horizontal edge joints and horizontal butt joints on opposite sides of studs need not be staggered or backed by steel framing. Panels attached to steel studs and floor runner with 1 in. long Type S steel screws spaced 8 in. OC when applied horizontally, or 8 in. OC along vertical and bottom edges and 12 in. OC in the field when panels are applied vertically. When used in widths other than 48 in., gypsum panels to be installed horizontally.

CERTAINTEED GYPSUM INC — Type X, Type X-1, Type C, Type EGRG/ GlasRoc

CGC INC — Types AR, C, IP-AR, IP-X1, IP-X2, IPC-AR, SCX, SHX, USGX, WRC or WRX (Joint tape and compound, Item 5, optional for use with Type USGX)

CONTINENTAL BUILDING PRODUCTS OPERATING CO, L L C — Types LGFC2A, LGFC6A, LGFC-C/A, LGFC-WD

GEORGIA-PACIFIC GYPSUM L L C — Types DAP, DAPC, DGG, DS

SAINT-GOBAIN GYPROC MIDDLE EAST FZE — Type Gyproc FireStop, Gyproc FireStop MR, Gyproc FireStop M2TECH, Gyproc FireStop ACTIV'Air, Gyproc FireStop MR ACTIV'Air, Gyproc FireStop M2TECH ACTIV'Air, Gyproc DuraLine, Gyproc DuraLine MR, Gyproc DuraLine M2TECH, Gyproc DuraLine ACTIV'Air, Gyproc DuraLine MR ACTIV'Air, Gyproc DuraLine M2TECH ACTIV'Air

THAI GYPSUM PRODUCTS PCL — Type X, Type C

UNITED STATES GYPSUM CO — Types AR, C, FRX-G, IP-AR, IP-X1, IP-X2, IPC-AR, SCX, SHX, WRC, WRX, USGX (Joint tape and compound, Item 5, optional for use with Type USGX)

USG BORAL ZAWAWI DRYWALL L L C SFZ — Types C, SCX

USG MEXICO S A DE C V — Type AR, C, IP-AR, IP-X1, IP-X2, IPC-AR, SCX, SHX, USGX, WRC or WRX (Joint tape and compound, Item 5, optional for use with Type USGX)

4B. **Gypsum Board* —** (As an alternate to Items 4 or 4A) — Nom 3/4 in. thick, 4 ft wide, installed as described in Item 4A with screw length increased to 1-1/4 in.

CGC INC — Types AR, IP-AR

UNITED STATES GYPSUM CO — Types AR, IP-AR

USG MEXICO S A DE C V — Types AR, IP-AR

4C. **Gypsum Board* —** As an alternate to Items 4, 4A, and 4B — Nom. 5/8 in. thick gypsum panels, with square edges, applied horizontally. Gypsum panels fastened to framing with 1 in. long bugle head steel screws spaced a max 8 in. OC, with last 2 screws 3/4 in. and 4 in. from each edge of board. Horizontal joints need not be backed by steel framing. Horizontal edge joints and horizontal butt joints on opposite sides of studs on interior walls need not be staggered or backed by steel framing.

GEORGIA-PACIFIC GYPSUM L L C — Type DGG, GreenGlass Type X

4D. **Gypsum Board* —** As an alternate to Items 4, 4A, 4B, and 4C — Nom. 5/8 in. thick gypsum panels applied vertically or horizontally. Horizontal edge joints and horizontal butt joints on opposite sides of studs need not be staggered or backed by steel framing. Gypsum panels fastened to framing with 1 in. long Type S steel screws 8 in. OC along vertical edges and 12 in. OC in the field when panels are applied vertically. When gypsum panels applied horizontally, fasten to framing with 1 in. long Type S steel screws spaced 8 in. OC along vertical edges and in the field. Screws spaced a max 12 in. along the top and bottom edges of the wall for both vertical and horizontal applications.

NATIONAL GYPSUM CO — Types eXP-C, FSK, FSK-C, FSK-G, FSL, FSW-C, FSW-G, FSW, FSW-3, FSW-5, FSW-6, FSW-8, FSMR-C

4E. **Gypsum Board* —** (As an alternate to Items 4 through 4D) — Installed as described in Item 4. 5/8 in. thick, 4 ft. wide, paper surfaced, applied vertically only and fastened to the studs and plates with 1 in. long, Type S steel screws spaced, 8 in. OC. Not to be used with item 6.

NATIONAL GYPSUM CO — SoundBreak XP Type X Gypsum Board

4F. **Gypsum Board* —** (Not Shown) — (As an alternate to Item 4 when used as the base layer on one or both sides of wall. For direct attachment only to steel studs Item 2C) - Nom 5/8 in. thick lead backed gypsum panels with beveled, square or tapered edges, applied vertically. Vertical joints centered over studs and staggered min 1 stud cavity on opposite sides of studs. Gypsum board secured to studs with 1-1/4 in. long Type S-12 steel screws spaced 8 in. OC at perimeter and 12 in. OC in the field.

RAY-BAR ENGINEERING CORP — Type RB-LBG

4G. **Gypsum Board* —** (As an alternate to Items 4 through 4F) — For use with Items 1D and 2D only, 5/8 in. thick, 4 ft wide, attached to steel studs and floor and ceiling track with 1 in. long, Type S steel screws spaced 8 in. OC. along edges of board and 12 in. OC in the field of the board. Joints oriented vertically and staggered on opposite sides of the assembly.

CONTINENTAL BUILDING PRODUCTS OPERATING CO, L L C — Type LGFC6A, LGFC-C/A

NATIONAL GYPSUM CO — Types FSW

UNITED STATES GYPSUM CO — Type SCX

USG BORAL ZAWAWI DRYWALL L L C SFZ — Type SCX

4H. **Gypsum Board* —** (As an alternate to Items 4 through 4G) — Nominal 5/8 in. thick, 4 ft wide panels, applied vertically and secured as described in Item 4.

PABCO BUILDING PRODUCTS L L C, DBA PABCO GYPSUM — Type QuietRock ES

4I. **Gypsum Board* —** (As an alternate to Items 4 through 4F) — For use with Items 1E and 2E only, 5/8 in. thick, 4 ft wide, attached to steel studs and floor and ceiling track with 1 in. long, Type S steel screws spaced 8 in. OC. along edges of board and 12 in. OC in the field of the board. Joints oriented vertically and staggered on opposite sides of the assembly.

UNITED STATES GYPSUM CO — Type SCX

USG BORAL ZAWAWI DRYWALL L L C SFZ — Type SCX

4J. **Gypsum Board* —** (Not Shown) — (As an alternate to Item 4 when used as the base layer on one or both sides of wall. For direct attachment only to steel studs Item 2C) — Nom 5/8 in. thick lead backed gypsum panels with beveled, square or tapered edges, applied vertically. Vertical joints centered over studs and staggered min 1 stud cavity on opposite sides of studs. Gypsum board secured to studs with 1-1/4 in. long Type S-12 steel screws spaced 8 in. OC at perimeter and 12 in. OC in the field. To be used with Lead Batten Strips (see Item 9A) or Lead Discs (see Item 10A).

MAYCO INDUSTRIES INC — Type X-Ray Shielded Gypsum

4K. **Gypsum Board* —** (As an alternate to Item 4 and 4A, not for use with Items 1D, 1E, 2D and 2E) — Nom. 5/8 in. thick gypsum panels with beveled, square or tapered edges installed as described in Item 4 and 4A.

CGC INC — Type ULX

UNITED STATES GYPSUM CO — Type ULX

USG MEXICO S A DE C V — Type ULX

4L. **Gypsum Board* —** (Not Shown) — (As an alternate to Item 4 when used as the base layer on one or both sides of wall. For direct attachment only to steel studs Item 2C). Nom 5/8 in. thick lead backed gypsum panels with beveled, square or tapered edges, applied vertically. Vertical joints centered over studs and staggered min 1 stud cavity on opposite sides of studs. Wallboard secured to studs with 1-1/4 in. long Type S-12 steel screws gypsum panel steel screws spaced 8 in. OC at perimeter and 12 in. OC in the field. Lead batten strips required behind vertical joints of lead backed gypsum wallboard and optional at remaining stud locations. Lead batten strips, min 2 in. wide, max 8 ft long with a max thickness of 0.14 in. placed on the face of studs and attached to the stud with construction adhesive and two 1 in. long Type S-12 pan head steel screws, one at the top of the strip and one at the bottom of the strip. Lead discs, nominal 3/8 in. diam by max 0.085 in. thick. Compression fitted or adhered over the screw heads. Lead batten strips and discs to have a purity of 99.9% meeting the Federal specification QQ-L-201f, Grade "C".

RADIATION PROTECTION PRODUCTS INC — Type RPP - Lead Lined Drywall

4M. **Gypsum Board* —** (For use with Item 8) — 5/8 in. thick, 4 ft wide, applied vertically over Mineral and Fiber Board (Item 8) with vertical joints located anywhere over stud cavities. Secured to mineral and fiber boards with 1-1/2 in. Type G Screws spaced 8 in. OC along edges of each vertical joint and 12 in. OC in intermediate field of the Mineral and Fiber Board (Item 8). Secured to outermost studs and floor and ceiling runners with 2 in. long Type S screws spaced 8 in. OC. Gypsum Board joints covered with paper tape and joint compound. Screw heads covered with joint compound.

AMERICAN GYPSUM CO — Type AG-C

CERTAINTEED GYPSUM INC — Type FRPC, Type C

CGC INC — Types C, IP-X2, IPC-AR

CONTINENTAL BUILDING PRODUCTS OPERATING CO, L L C — Type LGFC-C/A

GEORGIA-PACIFIC GYPSUM L L C — Types 5, DAPC, TG-C

NATIONAL GYPSUM CO — Types eXP-C, FSK-C, FSW-C

PABCO BUILDING PRODUCTS L L C, DBA PABCO GYPSUM — Type PG-C

PANEL REY S A — Types PRC, PRC2

SAINT-GOBAIN GYPROC MIDDLE EAST FZE — Type Gyproc FireStop, Gyproc FireStop MR, Gyproc FireStop M2TECH, Gyproc FireStop ACTIV'Air, Gyproc FireStop MR ACTIV'Air, Gyproc FireStop M2TECH ACTIV'Air, Gyproc DuraLine, Gyproc DuraLine MR, Gyproc DuraLine M2TECH, Gyproc DuraLine ACTIV'Air, Gyproc DuraLine MR ACTIV'Air, Gyproc DuraLine M2TECH ACTIV'Air

THAI GYPSUM PRODUCTS PCL — Type C

UNITED STATES GYPSUM CO — Types C, IP-X2, IPC-AR

USG BORAL ZAWAWI DRYWALL L L C SFZ — Type C

USG MEXICO S A DE C V — Types C, IP-X2, IPC-AR

4N. **Wall and Partition Facings and Accessories* —** (As an alternate to Item 4) — Nominal 5/8 in. thick, 4 ft wide panels, applied vertically and secured as described in Item 4.

PABCO BUILDING PRODUCTS L L C, DBA PABCO GYPSUM — Type QuietRock 527

4O. **Gypsum Board* —** As an alternate to Items 4, 4A, 4B, and 4C — Two layers Nom. 5/16 in. thick gypsum panels applied vertically or horizontally. Horizontal edge joints and horizontal butt joints on opposite sides of studs need not be staggered or backed by steel framing. Horizontal joints on the same side need not be staggered. When applied horizontally, both layers of gypsum board fastened to each side of framing with 1 in. long Type S steel screws spaced 8 in. OC and staggered 4 in. OC between layers. When applied vertically, both layers of gypsum board fastened to each side of framing with 1 in. long Type S steel screws spaced 8 in. OC along vertical edges and 12 in. OC in the field, staggered 4 in. OC between layers. Screws spaced a max 12 in. along the top and bottom edges of the wall.

NATIONAL GYPSUM CO — Type FSW

4P. **Gypsum Board* —** As an alternate to Item 4. For use with Item 3E, **Batts and Blankets*** — 5/8 in. thick, 4 ft wide attached to steel studs and floor and ceiling track with 1 in. long, Type S steel screws spaced 8 in. OC. along edges of board and 12 in. OC in the field of the board. Joints oriented vertically and staggered on opposite sides of the assembly. When attached to item 6 (resilient channels) or 6A, 6B or 6C (furring channels), gypsum board is screw attached to furring channels with 1 in. long, Type S steel screws spaced 12 in. OC.

UNITED STATES GYPSUM CO — Types ULIX

5. **Joint Tape and Compound —** Vinyl, dry or premixed joint compound, applied in two coats to joints and screw heads; paper tape, 2 in. wide, embedded in first layer of compound over all joints. As an alternate, nominal 3/32 in. thick gypsum veneer plaster may be applied to the entire surface of Classified veneer baseboard. Joints reinforced. Paper tape and joint compound may be omitted when gypsum boards are supplied with square edges.

6. **Resilient Channel —** (Optional — Not Shown) — 25 MSG galv steel resilient channels spaced vertically max 24 in. OC flange portion attached to each intersecting stud with 1/2 in. long type S-12 pan head steel screws. May not be used with Item 4F or 4J.

6A. **Steel Framing Members* —** (Not Shown) — As an alternate to Item 6, furring channels and Steel Framing Member as described below:

a. **Furring Channels —** Formed of No. 25 MSG galv steel. 2-9/16 in. or 2-23/32 in. wide by 7/8 in. deep, spaced 24 in. OC perpendicular to studs. Channels secured to studs as described in Item

b. Ends of adjoining channels are overlapped 6 in. and tied together with double strand of No. 18 SWG galv steel wire near each end of overlap. As an alternate, ends of adjoining channels may be overlapped 6 in. and secured together with two self-tapping No. 6 framing screws, min 7/16 in. long at the midpoint of the overlap, with one screw on each flange of the channel.

b. **Framing Members* —** Used to attach furring channels (Item a) to studs (Item 2). Clips spaced 48 in. OC., and secured to studs with 1-5/8 in. wafer or hex head Type S steel screw through the center grommet. Furring channels are friction fitted into clips. RSIC-1 clip for use with 2-9/16 in. wide furring channels. RSIC-1 (2.75) clip for use with 2-23/32 in. wide furring channels.

PAC INTERNATIONAL L L C — Types RSIC-1, RSIC-1 (2.75)

6B. **Framing Members* —** (Not Shown) — (Optional on one or both sides) — As an alternate to Item 6, furring channel and Steel Framing Members as described below:

a. **Furring Channels —** Formed of No. 25 MSG galv steel. 2-3/8 in. wide by 7/8 in. deep, spaced max. 24 in. OC perpendicular to studs. Channels secured to studs as described in Item b. Gypsum board attached to furring channels as described in Item 4.

b. **Steel Framing Members* —** Used to attach furring channels (Item 6Ba) to studs (Item 2). Clips spaced max. 48 in. OC. GENIECLIPS secured to studs with No. 8 x 1-1/2 in. minimum self-drilling, S-12 steel screw through the center grommet. Furring channels are friction fitted into clips.

PLITEQ INC — Type Genie Clip

6C. **Steel Framing Members* —** (Optional, Not Shown) — Furring channels and Steel Framing Members as described below:

a. **Furring Channels —** Formed of No. 25 MSG galv steel. Spaced 24 in. OC perpendicular to studs. Channels secured to studs as described in Item b. Ends of adjoining channels overlapped 6 in. and secured together with four self-tapping No. 8x1/2 Self Drilling screws (2 per side 1 in. and 4 in. from overlap edge). Gypsum board attached to furring channels as described in Item 4. Side joint furring channels shall be attached to studs with RESILMOUNT Sound Isolation Clips - Type A237R located approximately 2 in. from each end of length of channel. Both Gypsum Boards at side joints fastened into channel with screws spaced 8 in. OC, approximately 1/2 in. from joint edge.

b. **Steel Framing Members* —** Used to attach furring channels (Item 6Ca) to studs. Clips spaced 24 in. OC., and secured to studs with No. 10 x 2-1/2 in. coarse drywall screw through the center hole. Furring channels are friction fitted into clips.

STUDCO BUILDING SYSTEMS — RESILMOUNT Sound Isolation Clips - Type A237R

7. **Wall and Partition Facings and Accessories* —** (Optional, Not Shown) — Nominal 1/2 in. thick, 4 ft wide panels, for optional use as an additional layer on one or both sides of the assembly. Panels attached in accordance with manufacturer's recommendations. When the QR-500 or QR-510 panel is installed between the steel framing and the UL Classified gypsum board, the required UL Classified gypsum board layer(s) is/are to be installed as indicated as to fastener type and spacing, except that the required fastener length shall be increased by a minimum of 1/2 in. Not evaluated or intended as a substitute for the required layer(s) of UL Classified Gypsum Board.

PABCO BUILDING PRODUCTS L L C, DBA PABCO GYPSUM — Type QuietRock QR-500 and QR-510

8. **Mineral and Fiber Board* —** (Optional, Not Shown) — For optional use as an additional layer on one side of wall. Nom 1/2 in. thick, 4 ft wide with long dimension parallel and centered over studs. Attached to studs and floor and ceiling runners with 1-5/8 in. long Type S steel screws, spaced 12 in. OC and 24 in. OC along all intermediate framing. The required UL Classified gypsum board layer (Item 4M) is to be installed over the Mineral and Fiber Boards. Batts and Blankets, Item 3D, and Adhesive, Item 11, are required.

HOMASOTE CO — Homasote Type 440-32

9. **Lead Batten Strips —** (Not Shown, For Use With Item 4E) — Lead batten strips, min 1-1/2 in. wide, max 10 ft long with a max thickness of 0.125 in. Strips placed on the interior face of studs and attached from the exterior face of the stud with two 1 in. long Type S-12 pan head steel screws, one at the top of the strip and one at the bottom of the strip. Lead batten strips to have a purity of 99.9% meeting the Federal specification QQ-L-201f, Grade "C". Lead batten strips required behind vertical joints of lead backed gypsum board (Item 4E) and optional at remaining stud locations. Required behind vertical joints.

9A. **Lead Batten Strips —** (Not Shown, for use with Item 4J) — Lead batten strips, 2 in. wide, max 10 ft long with a max thickness of 0.140 in. Strips placed on the face of studs and attached to the stud with two min. 1 in. long min. Type S-8 pan head steel screws, one at the top of the strip and one at the bottom of the strip or with one min. 1 in. long min. Type S-8 pan head steel screw at the top of the strip. Lead batten strips to have a purity of 99.5% meeting the Federal specification QQ-L-201f, Grades "B, C or D". Lead batten strips required behind vertical joints of lead backed gypsum wallboard (Item 4J) and optional at remaining stud locations.

10. **Lead Discs or Tabs —** (Not Shown, For Use With Item 4E) — Used in lieu of or in addition to the lead batten strips (Item 8) or optional at other locations - Max 3/4 in. diam by max 0.125 in. thick lead discs compression fitted or adhered over steel screw heads or max 1/2 in. by 1-1/4 in. by max 0.125 in. thick lead tabs placed on gypsum boards (Item 4E) underneath screw locations prior to the installation of the screws. Lead discs or tabs to have a purity of 99.9% meeting the Federal specification QQ-L-201f, Grade "C".

10A. **Lead Discs —** (Not Shown, for use with Item 4J) — Max 5/16 in. diam by max 0.140 in. thick lead discs compression fitted or adhered over steel screw heads. Lead discs to have a purity of 99.5% meeting the Federal Specification QQ-L-201f, Grades "B, C or D".

11. **Adhesive —** Not Shown — (For use with Item 8) — Construction grade adhesive applied in vertical, serpentine, nominal 3/8 in. wide beads down the length of both vertical edges of Mineral and Fiber Board (Item 8).

12. **Wall and Partition Facings and Accessories* —** (Optional, Not Shown) — For use with Items 1 to 1I, Items 2 to 2J, Item 3, Items 4 to 4I, Item 5 and Item 6. For maximum fire rating of 1 hour. On one side of the wall, over the first layer of Gypsum Board (Item 4 to Item 4I), install RefleXor membrane with the gold side facing outwards. Membrane installed with T50 staples spaced 12 inches on center in both directions as per manufacturer's instructions, seams in membrane to be overlapped by 2 inches. When RefleXor membrane is used an additional layer of Gypsum Board that is identical to the one used in the first layer and as specified in Item 4 to Item 4I shall be installed over the membrane. The additional layer of Gypsum Board to be installed through the membrane to the stud as specified in Item 4 to Item 4I except the fastener length shall be increased by a minimum of 5/8 inch. Install Batts and Blankets in the stud cavity as per Item 3. On the other side of the wall, prior to the installation of the Gypsum Board, install Resilient Channels as per Item 6. Over the Resilient Channels install 3/4 inch thick SONOpan panel secured to the Resilient Channels with drywall screws and washers spaced at 16 in. OC on the perimeter of the panel and 8 in. OC in the field of the panel. Over the SONOpan panel install the same Gypsum Board as specified in Item 4 to Item 4I with the fastener length increased by minimum 3/4 inch. Not evaluated or intended as a substitute for the required layer(s) of UL Classified Gypsum Board.

MSL — RefleXor membrane, SONOpan panel

*** Indicates such products shall bear the UL or cUL Certification Mark for jurisdictions employing the UL or cUL Certification (such as Canada), respectively.**

Last Updated on 2016-08-25

XHBN.BW-S-0003 - Joint Systems Page 1 of 2

ONLINE CERTIFICATIONS DIRECTORY

System No. BW-S-0003
XHBN.BW-S-0003
Joint Systems

Page Bottom

Design/System/Construction/Assembly Usage Disclaimer

- Authorities Having Jurisdiction should be consulted in all cases as to the particular requirements covering the installation and use of UL Certified products, equipment, system, devices, and materials.
- Authorities Having Jurisdiction should be consulted before construction.
- Fire resistance assemblies and products are developed by the design submitter and have been investigated by UL for compliance with applicable requirements. The published information cannot always address every construction nuance encountered in the field.
- When field issues arise, it is recommended the first contact for assistance be the technical service staff provided by the product manufacturer noted for the design. Users of fire resistance assemblies are advised to consult the general Guide Information for each product category and each group of assemblies. The Guide Information includes specifics concerning alternate materials and alternate methods of construction.
- Only products which bear UL's Mark are considered Certified.

XHBN - Joint Systems

See General Information for Joint Systems

System No. BW-S-0003

November 18, 2008

Assembly Ratings — 1 and 2 Hr (See Item 2)

L Rating At Ambient — Less Than 1 CFM/Lin Ft (See Item 3B)

L Rating At 400°F — Less Than 1 CFM/Lin Ft (See Item 3B)

Joint Width — 3/4 In. Max

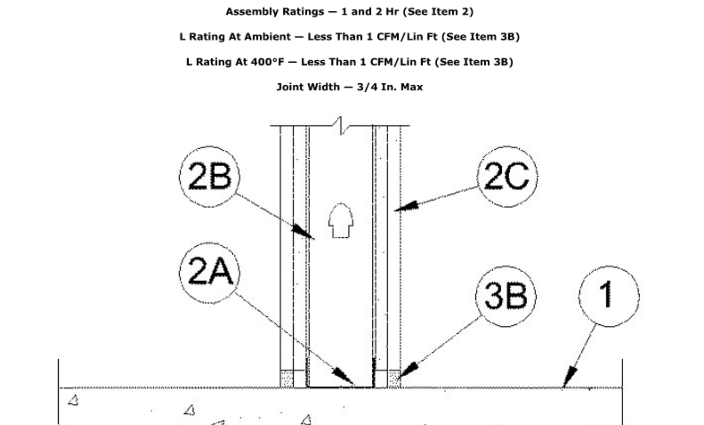

http://database.ul.com/cgi-bin/XYV/template/LISEXT/1FRAME/showpage.html?name=X... 6/12/2017

XHBN.BW-S-0003 - Joint Systems Page 2 of 2

1. **Floor Assembly —** Min 4-1/2 in. (114 mm) thick reinforced lightweight or normal weight (100-150 pcf or 1600-2400 kg/m³) structural concrete. Floor may also be constructed of any 6 in. (152 mm) thick UL Classified hollow-core **Precast Concrete Units*.**

See **Precast Concrete Units** category in the Fire Resistance Directory for names of manufactures.

2. **Wall Assembly —** The 1 or 2 h fire-rated gypsum board/steel stud wall assembly shall be constructed of the materials and in the manner specified in the individual U400 or V400 Series Wall or Partition Design in the UL Fire Resistance Directory. In addition, the wall may incorporate a head-of-wall joint system constructed as specified in the HW Series Joint Systems in the UL Fire Resistance Directory. The wall shall include the following construction features:

A. **Steel Floor Runner —** Floor runners of wall assembly shall consist of min No. 25 gauge galv steel channels sized to accommodate steel studs (Item 2B). Floor runners to be provided with min 1-1/4 in. (32 mm) flanges. Runners secured with steel fasteners spaced 12 in. (305 mm) OC.

B. **Studs —** Steel studs to be min 3-1/2 in. (89 mm) wide. Studs cut 1/2 to 3/4 in. (13 to 19 mm) less in length than assembly height with bottom nesting in, resting on and fastened to floor runner with sheet metal screws. Stud spacing not to exceed 24 in. (610 mm) OC.

C. **Gypsum Board* —** Gypsum board installed to a min total thickness of 5/8 in. (16 mm) or 1-1/4 in. (32 mm) on each side of wall for a 1 or 2 hr fire rated wall, respectively. Wall to be constructed as specified in the individual U400 or V400 Series Design in the UL Fire Resistance Directory except that a max 3/4 in. (19 mm) gap shall be maintained between the bottom of the gypsum board and the top of the concrete floor.

The hourly fire rating of the joint system is equal to the hourly fire rating of the wall.

3. **Joint System — Max separation between top of floor and bottom of gypsum board is 3/4 in. (19 mm).** The joint system consists of a packing material and a fill material, as follows:

A. **Packing Material —** (Optional, Not Shown) - Mineral wool batt insulation, polyethylene backer rod or glass fiber insulation firmly packed into the gap between the bottom of the gypsum board and the top of the concrete floor and recessed from each surface of the wall to accommodate the required thickness of fill material.

B. **Fill, Void or Cavity Material*-Sealant —** Min 1/2 in. (13 mm) thickness of fill material installed on each side of the wall between the bottom of the gypsum board and the top of the concrete floor, flush with each surface of the wall. When mineral wool batt insulation is used as a packing material, min thickness of fill material on each side of the wall is 1/4 in. (6 mm).

SPECIFIED TECHNOLOGIES INC — SpecSeal ES Sealant, SpecSeal LCI Sealant, SpecSeal LC150 Sealant, Pensil 300 Sealant or SpecSeal Series SIL300.

Note: L Ratings apply when SpecSeal ES Sealant is used.

*** Indicates such products shall bear the UL or cUL Certification Mark for jurisdictions employing the UL or cUL Certification (such as Canada), respectively.**

Last Updated on 2008-11-18

Questions? Print this page Terms of Use Page Top

© 2017 UL LLC

The appearance of a company's name or product in this database does not in itself assure that products so identified have been manufactured under UL's Follow-Up Service. Only those products bearing the UL Mark should be considered to be Certified and covered under UL's Follow-Up Service. Always look for the Mark on the product.

UL permits the reproduction of the material contained in the Online Certification Directory subject to the following conditions: 1. The Guide Information, Assemblies, Constructions, Designs, Systems, and/or Certifications (files) must be presented in their entirety and in a non-misleading manner, without any manipulation of the data (or drawings). 2. The statement "Reprinted from the Online Certifications Directory with permission from UL" must appear adjacent to the extracted material. In addition, the reprinted material must include a copyright notice in the following format: "© 2017 UL LLC".

http://database.ul.com/cgi-bin/XYV/template/LISEXT/1FRAME/showpage.html?name=X... 6/12/2017

ONLINE CERTIFICATIONS DIRECTORY

System No. HW-D-0044
XHBN.HW-D-0044
Joint Systems

Page Bottom

Design/System/Construction/Assembly Usage Disclaimer

- Authorities Having Jurisdiction should be consulted in all cases as to the particular requirements covering the installation and use of UL Certified products, equipment, system, devices, and materials.
- Authorities Having Jurisdiction should be consulted before construction.
- Fire resistance assemblies and products are developed by the design submitter and have been investigated by UL for compliance with applicable requirements. The published information cannot always address every construction nuance encountered in the field.
- When field issues arise, it is recommended the first contact for assistance be the technical service staff provided by the product manufacturer noted for the design. Users of fire resistance assemblies are advised to consult the general Guide Information for each product category and each group of assemblies. The Guide Information includes specifics concerning alternate materials and alternate methods of construction.
- Only products which bear UL's Mark are considered Certified.

XHBN - Joint Systems

XHBN7 - Joint Systems Certified for Canada

See General Information for Joint Systems

See General Information for Joint Systems Certified for Canada

System No. HW-D-0044

December 08, 2015

ANSI/UL2079	CAN/ULC S115
Assembly Ratings — 1, 2, 3 and 4 Hr (See Item 2)	F Ratings — 1, 2, 3, and 4 Hr (See Item 2)
Nominal Joint Widths — 1-1/2 and 2-1/2 In. (See Item 3)	FT Ratings — 1, 2, 3, and 4 Hr (See Item 2)
Class II Movement Capabilities — 40 or 50% Compression or Extension (See Item 3)	FH Ratings — 1, 2, 3, and 4 Hr (See Item 2)
L Rating At Ambient — Less Than 1 CFM/Lin Ft	FTH Ratings — 1, 2, 3, and 4 Hr (See Item 2)
L Rating At 400 F — Less Than 1 CFM/Lin Ft	Nominal Joint Widths — 1-1/2 and 2-1/2 In. (See Item 3)
	Class II Movement Capabilities — 40 or 50% Compression or Extension (See Item 3)
	L Rating At Ambient — Less Than 1 CFM/Lin Ft
	L Rating At 400 F — Less Than 1 CFM/Lin Ft

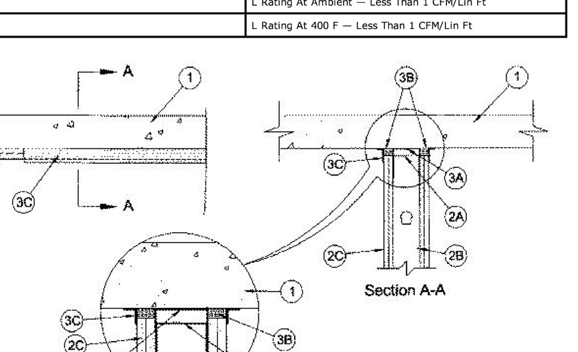

1. **Floor Assembly —** Min 4-1/2 in. (114 mm) thick steel-reinforced lightweight or normal weight (100-150 pcf or 1600-2400 kg/m³) structural concrete.

2. **Wall Assembly —** 1, 2, 3 or 4 hr fire-rated gypsum board/stud wall assembly shall be constructed of the materials and in the manner described in the individual U400, V400 or W400 Series Wall and Partition Design in the UL Fire Resistance Directory and shall include the following construction features:

A. **Steel Floor and Ceiling Runners —** Floor and ceiling runners of wall assembly shall consist of galv steel channels sized to accommodate steel studs (Item 2B). When deflection channel (Item 3A) is used, flange height of ceiling runner is to be equal to or greater than flange height of deflection channel and the ceiling runner is to nest within the deflection channel with a 3/4 to 1 in. (19 to 25 mm) gap maintained between the top of the ceiling runner and the top of the deflection channel. When deflection channel is not used, flange height of ceiling runner shall be min 3/4 in. (19 mm) greater than nom joint width. Ceiling runner is secured to concrete floor slab with steel masonry anchors spaced max 24 in. (610 mm) OC.

A1. **Light Gauge Framing* - Slotted Ceiling Runner —** When nom joint width is less than or equal to 1-3/4 in. (45 mm), slotted ceiling runner may be used as an alternate to the ceiling runner in Item 2A. Slotted ceiling runner to consist of galv steel channel with slotted flanges sized to accommodate steel studs (Item 2B). Ceiling runner secured to concrete floor slab with steel masonry anchors spaced max 24 in. (610 mm) OC. When slotted ceiling runner is used, deflection channel (Item 3A) shall not be used.

BRADY CONSTRUCTION INNOVATIONS INC, DBA SLIPTRACK SYSTEMS — SLP-TRK

CALIFORNIA EXPANDED METAL PRODUCTS CO — CST

CLARKDIETRICH BUILDING SYSTEMS — Type SLT, SLT-H

MARINO/WARE, DIV OF WARE INDUSTRIES INC — Type SLT

METAL-LITE INC — The System

SCAFCO STEEL STUD MANUFACTURING CO

TELLING INDUSTRIES L L C — True-Action Deflection Track

THE STEEL NETWORK INC — VertiTrack VT series, 250VT, 362VT, 400VT, 600VT and 800VT

A2. **Light Gauge Framing* - Vertical Deflection Ceiling Runner —** When nom joint width is less than or equal to 1 in. (25 mm), vertical deflection ceiling runner may be used as an alternate to the ceiling runner in Items 3A and 3A1., Vertical deflection ceiling runner to consist of galv steel channel with slotted vertical deflection clips mechanically fastened within runner. Slotted clips, provided with step bushings, for permanent fastening of steel studs. Vertical deflection ceiling runner secured to concrete floor slab with steel masonry anchors spaced max 24 in. (610 mm) OC. When vertical deflection ceiling runner is used, deflection channel (Item 4A) shall not be used.

THE STEEL NETWORK INC — VertiTrack VTD362, VTD400, VTD600 and VTD800

A3. **Light Gauge Framing*- Notched Ceiling Runner —** As an alternate to the ceiling runners in Items 2A through 2A3, notched ceiling runners to consist of C-shaped galv steel channel with notched return flanges sized to accommodate steel studs (Item 2B). Notched ceiling runner secured to concrete floor slab with steel masonry anchors spaced max 24 in. (610 mm) OC. When notched ceiling runner is used, deflection channel (Item 3A) shall not be used.

OLMAR SUPPLY INC — Type SCR

A4. **Light Gauge Framing* —Vertical Deflection Clip* —** (Optional) Steel clips can be used in conjunction with steel studs (Item 2B), ceiling runner (Item 2A) or deflection channel (Item 3A). Clips installed over the top of studs and inserted within the ceiling runner or deflection channel. Clip shall be secured to the ceiling runner or deflection channel with No. 8 self drilling, self tapping steel fasteners through holes provided within the clip. Clip may be secured to the stud with No. 6 pan head steel screw through holes provided within the clip. As an alternate, the legs of the clip may be installed over the top of the stud without attachment in accordance with manufacturer's installation instructions.

FLEX-ABILITY CONCEPTS L L C — Three Legged Dog Deflection Clip

A5. **Steel Framing Members* — Sound Isolation Clips —** (Not Shown, For Max 2 Hr Rating) - As an alternate attachment means for the ceiling runner to the underside of the floor when no deflection channel (Item 3A) is used, sound isolation clips installed in accordance with the accompanying installation instructions. Sound isolation clip installed through nom 1 in. (25 mm) diam hole in ceiling runner and attached to top of ceiling runner using four min No. 8 by 1/2 in. (13 mm) long self-tapping galv steel screws. Sound isolation clips to be installed adjacent to every stud location but not more than 24 in. (610 mm) OC and attached to the underside of floor assembly using min 3/16 in. (5 mm) diam by 2-1/2 in. (64 mm) long steel masonry anchors.

PAC INTERNATIONAL L L C — Type RSIC-U-HD

B. **Studs —** Steel studs to be min 3-1/2 in. (89 mm) wide. Studs cut 1/2 to 1 in. (13 to 25 mm) less in length than assembly height with bottom nesting in and secured to floor runner. When deflection channel (Item 3A) is used, steel studs attached to ceiling runner (Item 2A) with sheet metal screws located 1/2 in. (13 mm) below the bottom to the deflection channel. When deflection channel is not used, studs to nest in ceiling runner without attachment. When slotted ceiling runner (Item 2A1) is used, steel studs secured to slotted ceiling runner with No. 8 by 1/2 in. (13 mm) long wafer head steel screws at mid-height of slot on each side of wall. When vertical deflection ceiling runner (Item 2A2) is used, steel studs secured to slotted vertical deflection clips, through the bushings, with steel screws at mid-height of each slot. Stud spacing not to exceed 24 in. (610 mm) OC.

C. **Gypsum Board* —** Gypsum board sheets installed to a min total 5/8 in., 1-1/4 in., 1-1/2 in. or 2 in. (16, 32, 38 or 51 mm) thickness on each side of wall for 1, 2, 3 or 4 hr rated assemblies, respectively. Wall to be constructed as specified in the individual U400, V400 or W400 Series Design in the UL Fire Resistance Directory, except that a max 1 or 2-1/2 in. (25 or 64 mm) gap (See Item 3) shall be maintained between the top of the gypsum board and the lower surface of the floor . The screws attaching the gypsum board to the studs along the top of the wall shall be located 1 in. (25 mm) below the bottom of the ceiling runner. No gypsum board attachment screws shall be driven into the ceiling runner or into the optional deflection channel.

The hourly fire rating of the joint system is equal to the hourly fire rating of the wall.

3. **Joint System — Max separation between bottom of floor and top of gypsum board (at time of installation of joint system) is 2-1/2 in. (64 mm) for 1 and 2 hr ratings and 1 in. (25 mm) for 3 and 4 hr ratings. The joint system is designed to accommodate a max 50 percent compression or extension from its installed width for max 1-1/2 in. (38 mm) wide joints and a max 40 percent compression or extension from its installed width for max 2-1/2 in. (64 mm) wide joints.** The joint system shall consist of forming and fill materials, with or without a deflection channel (Item 3A), as follows:

A. **Deflection Channel —** (Optional) - Max 3 in. (76 mm) deep min 24 gauge galv steel channel sized to accommodate ceiling runner (Item 2A). Deflection channel secured to concrete floor slab with steel masonry anchors spaced max 24 in. (610 mm) OC. The ceiling runner (Item 2A) is installed within the deflection channel to maintain a 1/2 to 3/4 in. (13 to 19 mm) gap

between the top of the ceiling runner and the top of the deflection channel. The ceiling runner nests inside the deflection channel without attachment.

B. **Forming Material* —** Sections of min 4 pcf (64 kg/m³) density mineral wool batt compressed 50 percent in thickness and installed cut edge first to completely fill the gap between the top of the gypsum board and the bottom of the concrete floor. When sound isolation clips (Item 2A6) are used, the space between the top of the ceiling runner and the underside of the floor shall be tightly packed with mineral wool batt insulation. The forming material shall be installed flush with both surfaces of wall.

INDUSTRIAL INSULATION GROUP L L C — MinWool-1200 Safing

ROCK WOOL MANUFACTURING CO — Delta Board

ROCKWOOL MALAYSIA SDN BHD — Safe

ROXUL INC — Safe

THERMAFIBER INC — SAF

C. **Fill, Void or Cavity Material* — Sealant —** Min 1/16 in. (1.6 mm) dry thickness (1/8 in. or 3.2 mm wet thickness) of fill material spray applied on each side of the wall between the top of the wall and the bottom of the floor, and overlap a min 1/2 in. (13 mm) onto gypsum board on both sides of wall. Additional 1/16 in. (1.6 mm) dry thickness (1/8 in. or 3.2 mm wet thickness) of fill material shall overlap a min 1/2 in. (13 mm) onto the floor on both sides of wall.

SPECIFIED TECHNOLOGIES INC — SpecSeal AS200 Elastomeric Spray

*** Indicates such products shall bear the UL or cUL Certification Mark for jurisdictions employing the UL or cUL Certification (such as Canada), respectively.**

Last Updated on 2015-12-08

STATE OF MISSOURI
Victor L. Mosby
Number
A-6471
REGISTERED ARCHITECT

3-23-2020

Victor L. Mosby - Architect
License - Missouri #A-6471

ACI
BOLAND
ARCHITECTS

1710 Wyandotte
Kansas City, MO 64108
T: 816.763.9600

ACI/Boland, Inc.
Kansas City | St. Louis
Licensee's Certificate of Authority Number:

STRUCTURAL, MECHANICAL, ELECTRICAL, & PLUMBING CONSULTANT

Professional Engineering Consultants, P.A.

623 Massachusetts Street, Suite 200
Lawrence, KS 66044

Licensee's Certificate of Authority Number:

Phone Number: 785.842.6464

Lee's Summit Medical Center

Hybrid OR Addition
2100 SE Blue Parkway
Lee's Summit, MO 64063

Date	3-23-2020
Job Number	3-19058
Drawn By	CL
Checked By	KC

Revision

Number	Date	Description

A0.4

© 2020 ACI/BOLAND, Inc

U.L. DESIGN ASSEMBLIES

C:\Users\clauer\Documents\3-19058_LSMC Hybrid OR_Arch_clauerVTDN7.rvt

ONLINE CERTIFICATIONS DIRECTORY

Design No. U469
BXUV.U469
Fire Resistance Ratings - ANSI/UL 26

"Reprinted from the Online Certifications Directory with permission from UL"

Design/System/Construction/Assembly Usage Disclaimer

- Authorities Having Jurisdiction should be consulted in all cases as to the particular requirements covering the installation and use of UL Certified products, equipment, system, devices, and materials.
- Authorities Having Jurisdiction should be consulted before construction.
- Fire resistance assemblies and products are developed by the design submitter and have been investigated by UL for compliance with applicable requirements. The published information cannot always address every construction nuance encountered in the field.
- When field issues arise, it is recommended the first contact for assistance be the technical service staff provided by the product manufacturer noted for the design. Users of fire resistance assemblies are advised to consult the general Guide Information for each product category and each group of assemblies. The Guide Information includes specifics concerning alternate materials and alternate methods of construction.
- Only products which bear UL's Mark are considered Certified.

BXUV - Fire Resistance Ratings - ANSI/UL 263

BXUV7 - Fire Resistance Ratings - CAN/ULC-S101 Certified for Canada

Design No. U469

September 03, 2015

Assembly Rating — 1 HR

Nonbearing Wall

*** Indicates such products shall bear the UL or cUL Certification Mark for jurisdictions employing the UL or cUL Certification (such as Canada), respectively.**

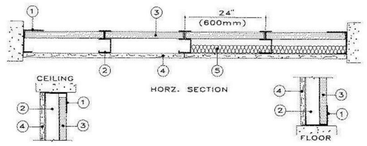

1. **Floor and Ceiling Runners —** "J" - shaped, 2-1/2 in. wide with unequal legs of 1 in. and 2 in., fabricated from 24 MSG galv steel (min 20 MSG steel required when Item 4A is used). Runners attached to structural supports with steel fasteners located not greater than 2 in. from ends and not greater than 24 in. OC.

2. **Steel Studs —** "C-H" shaped studs, 2-1/2 in. wide by 1-1/2 in. deep, fabricated from min 25 MSG galv steel (min 20 MSG steel required when Item 4A is used), spaced 24 in. or 600 mm OC. Vertically restrained walls require studs to be cut 3/8 in. less than floor to ceiling height.

3. **Gypsum Board* —** 1 in. thick gypsum wallboard liner panels, supplied in nominal 24 in. or 600 mm widths. Vertical edges inserted in "H" shaped section of "C-H" studs. Free edge of end panels attached to long leg of "J" runners with 1-5/8 in. long Type S head steel screws spaced not greater than 12 in. OC.

CGC INC — Type SLX.

CONTINENTAL BUILDING PRODUCTS OPERATING CO, L L C — Type LGFCSL

GEORGIA-PACIFIC GYPSUM L L C — Types TP-6, DGUSL, and TRSL

UNITED STATES GYPSUM CO — Type SLX

USG BORAL ZAWAWI DRYWALL L L C SFZ — Type SLX

USG MEXICO S A DE C V — Type SLX.

4. **Gypsum Board* —** 5/8 in. thick, 4 ft or 1200 mm wide, applied vertically and attached to studs with 1 in. long Type S steel screws spaced 12 in. OC along the edges and in the field of the boards.

ACADIA DRYWALL SUPPLIES LTD — 5/8 Type X, Type Blueglass Exterior Sheathing

AMERICAN GYPSUM CO — Types AGX-1, M-Glass, AG-C.

CERTAINTEED GYPSUM INC — Type C.

CGC INC — Types C, IP-X1, IP-X2, IPC-AR, SCX, ULX, or WRC.

CONTINENTAL BUILDING PRODUCTS OPERATING CO, L L C — Types LGFC-C, LGFC-C/A, LGFC6A

GEORGIA-PACIFIC GYPSUM L L C — Types 5, DAPC, Type X, Veneer Plaster Base - Type X, Water Rated - Type X, Sheathing - Type X, Soffit - Type X, Type TG-C, Type LWX, Veneer Plaster Base-Type LWX, Water Rated-Type LWX, Sheathing Type-LWX, Soffit-Type LWX, Type DGLW, Water Rated-Type DGLW, Sheathing Type- DGLW, Soffit-Type DGLW, Type LW2X, Veneer Plaster Base - Type LW2X, Water Rated - Type LW2X, Sheathing - Type LW2X, Soffit - Type LW2X, Type DGL2W, Water Rated - Type DGL2W, Sheathing - Type DGL2W, Type DGG, Type DAP, Type DS.

PABCO BUILDING PRODUCTS L L C, DBA PABCO GYPSUM — Types C, PG-11, PG-C, PGS-WRS.

THAI GYPSUM PRODUCTS PCL — Type C.

UNITED STATES GYPSUM CO — Types C, FRX-G, IP-X1, IP-X2, IPC-AR, SCX, ULX or WRC.

USG BORAL ZAWAWI DRYWALL L L C SFZ — Types C, SCX

USG MEXICO S A DE C V — Types C, IP-X1, IP-X2, IPC-AR, SCX, ULX, or WRC.

4A. **Gypsum Board* —** Not Shown - As an Alternate to Item 4. Nom 5/8 in. thick lead backed gypsum panels with beveled, square or tapered edges, applied vertically. Vertical joints centered over studs and staggered min 1 stud cavity on opposite sides of studs. Wallboard secured to studs with 1-1/4 in. long Type S-12 steel screws spaced 8 in. OC at perimeter and 12 in. OC in the field. Lead batten strips required behind vertical joints

RAY-BAR ENGINEERING CORP — Type RB-LBG

4B. **Gypsum Board* —** Not Shown - As an Alternate to Item 4. Nom 5/8 in. thick lead backed gypsum panels with beveled, square or tapered edges, applied vertically. Vertical joints centered over studs and staggered min 1 stud cavity on opposite sides of studs. Wallboard secured to studs with 1-1/4 in. long Type S-12 steel screws spaced 8 in. OC at perimeter and 12 in. OC in the field. Lead batten strips required behind vertical joints. To be used with Lead Batten

Strips (see Item 6B) or Lead Discs (see Item 6C).

MAYCO INDUSTRIES INC — Type X-Ray Shielded Gypsum

4C. **Gypsum Board* —** (Not Shown - As an Alternate to Item 4.). Nom 5/8 in. thick lead backed gypsum panels with beveled, square or tapered edges, applied vertically. Vertical joints centered over studs and staggered min 1 stud cavity on opposite sides of studs. Wallboard secured to studs with 1-1/4 in. long Type S-12 steel screws gypsum panel steel screws spaced 8 in. OC at perimeter and 12 in. OC in the field. Lead batten strips required behind vertical joints of lead backed gypsum wallboard and optional at remaining stud locations. Lead batten strips, min 2 in. wide, max 8 ft long with a max thickness of 0.14 in. placed on the face of studs and attached to the stud with construction adhesive and two 1 in. long Type S-12 pan head steel screws, one at the top of the strip and one at the bottom of the strip. Lead discs, nominal 3/8 in. diam by max 0.085 in. thick. Compression fitted or adhered over the screw heads. Lead batten strips and discs to have a purity of 99.9% meeting the Federal specification QQ-L-201f, Grade "C".

RADIATION PROTECTION PRODUCTS INC — Type RPP - Lead Lined Drywall

4D. **Gypsum Board* —** For use with Item 5D, **Batts and Blankets***and minimum stud depth increased to 4 in. - 5/8 in. thick, 4 ft or 1200 mm wide, applied vertically and attached to studs with 1 in. long Type S steel screws spaced 12 in. OC along the edges and in the field of the boards.

UNITED STATES GYPSUM CO — Type ULIX

5. **Batts and Blankets*** — (Optional) — Mineral wool batts partially or completely filling stud cavity.

ROXUL INC — Type AFB

THERMAFIBER INC — Type SAFB

5A. **Fiber, Sprayed* —** As an alternate to Batts and Blankets (Item 5) — (100% Borate Formulation) — Spray applied cellulose material. The fiber is applied with water to completely fill the enclosed cavity in accordance with the application instructions supplied with the product with a nominal dry density of 2.7 lb/ft^3. Alternate Application Method: The fiber is applied without water or adhesive at a nominal dry density of 3.5 lb/ft^3, in accordance with the application instructions supplied with the product.

U S GREENFIBER L L C — INS735 & INS745 for use with wet or dry application. INS765LD and INS770LD are to be used for dry application only.

5B. **Fiber, Sprayed* —** As an alternate to Batts and Blankets (Item 5) and Item 5A - Spray applied cellulose insulation material. The fiber is applied with water to interior surfaces in accordance with the application instructions supplied with the product. Applied to completely fill the enclosed cavity. Minimum dry density of 4.3 pounds per cubic ft.

NU-WOOL CO INC — Cellulose Insulation

5C. **Fiber, Sprayed* —** As an alternate to Batts and Blankets (Item 5) - Spray applied cellulose fiber. The fiber is applied with water to completely fill the enclosed cavity in accordance with the application instructions supplied with the product. The minimum dry density shall be 4.30 lbs/ft^3.

INTERNATIONAL CELLULOSE CORP — Cellar-RL

5D. **Batts and Blankets* —** For use with Item 4D. Placed in stud cavities, any min. 3-1/2 in. thick glass fiber insulation bearing the UL Classification Marking as to Surface Burning Characteristics and/or Fire Resistance. See **Batts and Blankets (BKNV or BZJZ) Categories** for names of Classified companies.

6. **Lead Batten Strips —** For Use with Item 4A - (Not Shown) — Lead batten strips required behind vertical joints of lead backed gypsum wallboard (Item 4A) and optional at remaining stud locations. Strips, min 1-1/2 in. wide, max 10 ft long with a max thickness of 0.125 in. Strips placed on the interior face of studs and attached from the exterior face of the stud with two 1 in. long Type S-12 pan head steel screws, one at the top of the strip and one at the bottom of the strip. Lead batten strips to have a purity of 99.9% meeting the Federal specification QQ-L-201f, Grade "C".

6A. **Lead Discs or Tabs —** (Not Shown) - Used in lieu of or in addition to the lead batten strips (Item 6) or optional at other locations - Max 3/4 in. diam by max 0.125 in. thick lead discs compression fitted or adhered over steel screw heads or max 1/2 in. by 1-1/4 in. by max 0.125 in. thick lead tabs placed on gypsum boards (Item 5) underneath screw location prior to the installation of the screws. Lead discs or tabs to have a purity of 99.9% meeting the Federal specification QQ-L-201f, Grade "C".

6B. **Lead Batten Strips —** (Not Shown, for use with Item 4B) Lead batten strips, 2 in. wide, max 10 ft long with a max thickness of 0.140 in. Strips placed on the face of studs and attached to the stud with two min. 1 in. long min. Type S-8 pan head steel screws, one at the top of the strip and one at the bottom of the strip or with one min. 1 in. long min. Type S-8 pan head steel screw at the top of the strip. Lead batten strips to have a purity of 99.5% meeting

the Federal specification QQ-L-201f, Grades "B, C or D".

6C. **Lead Discs —** (Not Shown, for use with Item 4B) Max 5/16 in. diam by max 0.140 in. thick lead discs compression fitted or adhered over steel screw heads. Lead discs to have a purity of 99.9% meeting the Federal Specification QQ-L-201f, Grades "B, C or D".

*** Indicates such products shall bear the UL or cUL Certification Mark for jurisdictions employing the UL or cUL Certification (such as Canada), respectively.**

Last Updated on 2015-09-03

© 2016 UL LLC

The appearance of a company's name or product in this database does not in itself assure that products so identified have been manufactured under UL's Follow-Up Service. Only those products bearing the UL Mark should be considered to be Certified and covered under UL's Follow-Up Service. Always look for the Mark on the product.

UL permits the reproduction of the material contained in the Online Certification Directory subject to the following conditions: 1. The Guide Information, Assemblies, Constructions, Designs, Systems, and/or Certifications (files) must be presented in their entirety and in a non-misleading manner, without any manipulation of the data (or drawings). 2. The statement "Reprinted from the Online Certifications Directory with permission from UL" must appear adjacent to the extracted material. In addition, the reprinted material must include a copyright notice in the following format: "© 2016 UL LLC".

Design No. X790

November 17, 2014

Ratings — 1, 1-1/2, 2, 3 and 4 Hr.

*** Indicates such products shall bear the UL or cUL Certification Mark for jurisdictions employing the UL or cUL Certification (such as Canada), respectively.**

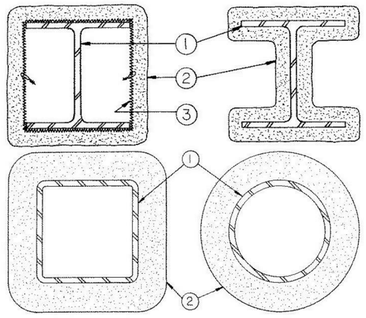

1. **Steel Column, Steel Pipe or Steel Tube —** Wide flange steel column (W) or steel circular pipe (SP) or steel square or rectangular tube (ST), min sizes as shown in the tables below.

2. **Spray-Applied Fire Resistive Materials* —** Applied by mixing with water and spraying in one or more coats to the thicknesses shown below, to steel surfaces which are clean and free of dirt, loose scale, and oil. Min average and min individual density of 15 and 14 pcf, for Types 300, 300AC, 300ES, 300HS, 300N, 3000, 3000ES and SB. For Types 400AC and 400ES min average and min individual density of 22 and 19 pcf, respectively. For method of density determination, see Design Information Section, Sprayed Material.

The min thickness of Spray-Applied Fire Resistive Materials required for various fire resistance ratings of contour sprayed or boxed wide flange columns are shown in the table below:

Column Size	W/D	Min Thkns In. 1 Hr	1-1/2 Hr	2 Hr	3 Hr	4 Hr
W6x9	0.33	15/16	1-1/4	1-9/16	2-1/8	2-11/16
W6x12	0.43	13/16	1-1/8	1-7/16	2	2-9/16
W6x16	0.57	11/16	1	1-5/16	1-7/8	2-3/8
W8x28	0.68	5/8	15/16	1-1/4	1-13/16	2-5/16
W10x49	0.83	9/16	13/16	1-1/8	1-5/8	2-1/8
W12x106	1.46	3/8	9/16	13/16	1-1/4	1-11/16
W14x233	2.52	1/4	3/8	1/2	7/8	1-3/16
W14x730	6.68	1/4	1/4	1/4	3/8	1/2

As an alternate to the above table, the required thickness of Spray-Applied Fire Resistive Materials to be applied to all surfaces of the steel columns for all rating periods may be determined from the following equations:

$$h = \frac{R}{75\ (W/D) + 32}$$

(for column W/D range of 0.33 to 2.51)

$$h = \frac{R}{75\ (W/D) + 15}$$

(for column W/D range of 2.51 to 6.68)

Where:

h = Spray-Applied Fire Resistive Materials thickness in the range of 1/4 to 4-1/2 in. (rounded up to the nearest 1/16 in.)

R = Fire resistance rating period in minutes (60-240 mins.)

D = Heated perimeter of the steel column in inches.

W = Weight of the steel column in lbs per foot.

The thicknesses contained in the table below are applicable when the Spray-Applied Fire Resistive Materials applied to the column's flange tips are reduced to one-half that shown in the table below (for contour application):

Column Size In.	Min Thkns In. 1 Hr	1-1/2 Hr	2 Hr	3 Hr	4 Hr
W6x9	1	1-3/8	1-3/4	2-7/16	3-1/8
W6x12	7/8	1-1/4	1-5/8	2-5/16	3-1/16
W6x16	3/4	1-1/8	1-7/16	2-1/16	2-11/16
W8x28	11/16	1	1-5/16	1-15/16	2-1/2
W10x49	5/8	15/16	1-3/16	1-3/4	2-3/8
W12x106	3/8	5/8	7/8	1-3/8	1-13/16
W14x233	5/16	3/8	9/16	15/16	1-5/16
W14x730	5/16	5/16	5/16	7/16	5/8

The min thickness of Spray-Applied Fire Resistive Materials required for various fire resistance ratings of contour sprayed steel pipes or tubes are shown on the table below:

Min Column Size In.	A/P	Min Thkns In. 1 Hr	1-1/2 Hr	2 Hr	3 Hr	4 Hr
SP 4x0.237	0.22	11/16	1	1-3/8	2-1/16	2-3/4
ST 4x4x0.1875	0.18	3/4	1-1/16	1-7/16	2-1/16	2-11/16
ST 4x4x0.3125	0.29	1/2	13/16	1-1/8	1-3/4	2-5/16
ST 4x4x0.375	0.34	7/16	3/4	1	1-9/16	2-1/8
ST 4x4x0.5	0.44	3/8	9/16	7/8	1-3/8	1-7/8
ST20x20x0.75 in	0.72	5/16	1/2	11/16	1-1/16	1-7/16
ST20x20x1 in.	0.95	1/4	3/8	1/2	13/16	1-1/8
ST20x20x1.5 in.	1.39	1/4	1/4	3/8	5/8	13/16
ST20x20x1.75 in.	1.60	1/4	1/4	3/8	1/2	3/4
ST32x32x1.25 in.	1.20	1/4	5/16	7/16	11/16	15/16
ST 36x24x0.5	0.49	5/16	7/16	11/16	1-1/8	1-9/16

As an alternate to the table above, the required thickness of Spray-Applied Fire Resistive Materials to be applied to all surfaces of the steel pipes or tubes for all rating periods may be determined from the following equation:

$$h = \frac{R}{188\ (A/P) + 45}$$

Where:

h = Spray-Applied Fire Resistive Materials thickness in the range of 5/16 to 4-1/4 in. (rounded up to the nearest 1/16 in.)

R = Fire resistance rating in minutes (60-240 mins.)

A = Cross-sectional area of pipe or tube.

P = Heated perimeter of steel pipe or tube.

A/P = 0.18 to 0.49.

The A/P ratio of a circular pipe is determined by:

$$A/P = \frac{t\ (d - t)}{d}$$

Where:

d = the outer diameter of the pipe (in.)

t = the wall thickness of the pipe (in.)

The A/P ratio of a rectangular tube is determined by:

$$A/P = \frac{t\ (a + b - 2t)}{a + b}$$

Where:

a = the outer width of the tube (in.)

b = the outer length of the tube (in.)

t = the wall thickness of the tube (in.)

BERLIN CO LTD — Types 300, 300ES, 300N or SB.

GREENTECH THERMAL INSULATION PRODUCTS MFG CO L L C — Types 300, 300AC, or 400AC.

ISOLATEK INTERNATIONAL — Type 300, 300AC, 300ES, 300HS, 300N, 400AC, 400ES, SB, 3000 or 3000ES.

NEWKEM PRODUCTS CORP — Types 300, 300ES, 300N or SB.

2A. **(As an alternate to Item 2) Spray-Applied Fire Resistive Materials* —** Applied by mixing with water and spraying in one or more coats to the thicknesses shown below, to steel surfaces which are clean and free of dirt, loose scale, and oil. Min average and min individual density of 17.5 and 16 pcf, respectively, for Type 300TW. Min average and min individual density of 22 and 19 pcf, respectively, for Type 400. For method of density determination, see Design Information Section, Sprayed Material.

The min thickness of Spray-Applied Fire Resistive Materials required for various fire resistance ratings is shown in Item 2.

BERLIN CO LTD — Type 400.

GREENTECH THERMAL INSULATION PRODUCTS MFG CO L L C — Type 400.

ISOLATEK INTERNATIONAL — Type 300TW or Type 400.

NEWKEM PRODUCTS CORP — Type 400.

2B. **(As an alternate to Item 2 and 2A) — Spray-Applied Fire Resistive Materials* —** Prepared by mixing with water according to instructions on each bag of mixture and spray- or trowel-applied to steel surfaces which are free of dirt, oil or scale. Min average density of 17.5 pcf with min individual value of 17.0 pcf. For method of density determination, see Design Information Section, Sprayed Material.

The min thickness of Spray-Applied Fire Resistive Materials required for various fire resistance ratings is shown in Item 2.

ISOLATEK INTERNATIONAL — Type 280.

3. **Metal Lath —** (Optional for contour application) — 3.4 lb/sq yd galv or painted expanded steel lath. Lath shall be lapped 1 in. and tied together with No. 18 SWG galv steel wire spaced vertically 6 in. OC.

*** Indicates such products shall bear the UL or cUL Certification Mark for jurisdictions employing the UL or cUL Certification (such as Canada), respectively.**

Design No. S729

November 17, 2014

Restrained Beam Ratings — 1, 1-1/2, 2, 3 or 4 Hr (See Item 6)

Unrestrained Beam Ratings — 1, 1-1/2, 2, 3 or 4 Hr (See Item 6)

This design was evaluated using a load design method other than the Limit States Design Method (e.g., Working Stress Design Method). For jurisdictions employing the Limit States Design Method, such as Canada, a load restriction factor shall be used — See Guide BXUV or BXUV7

*** Indicates such products shall bear the UL or cUL Certification Mark for jurisdictions employing the UL or cUL Certification (such as Canada), respectively.**

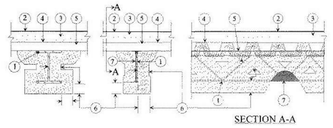

1. **Steel Supports —** W6x16 min size steel beam or steel joist composite or noncomposite and welded or bolted to end supports. May be unpainted or provided with a shop coat of paint. Designed per S.1.1. specifications for a max design stress of 30,000 psi. Top chords shall consist of two angles measuring min 1-1/2 by 1-1/2 by 0.128 in. thick. Bottom chords shall consist of two angles measuring min 1 by 1 by 0.110 in. thick. Bearing plates shall consist of two angles measuring min 1-1/2 by 1-1/2 by 0.153 in. thick and shall be min 5 in. long. All web members, including the end web members shall consist of min 0.564 round bars. Bridging per S.1.1. specifications is required when noncomposite joists are used.

2. **Roof Covering* —** Consisting of hot mopped, cold application or single-ply materials, compatible with insulation(s) described herein which provide Class A, B or C coverings. See Roofing Materials and Systems Directory-Roof Covering Materials (TEVT).

3. **Roof Insulation* —** Consisting of building units, foamed plastic or mineral and fiber boards, applied in one or more layers. When multiple layers are used, end and side joints shall be offset a min of 12 in. in both directions in order to lap all joints. See category for names of companies providing Classified products — Building Units (BZXX), Foamed Plastic (CCVW) or Mineral and Fiber Boards (CERZ). Roof insulation shall be compatible with roof covering materials Class A, B or C system. See Roofing Materials and Systems Directory-Roof Covering Materials (TEVT).

4. **Adhesives —** (Optional) — May be applied to steel roof deck units or between insulation layers at a max application rate of 0.4 gal per 100 sq ft. See **Adhesives** (BYRR) category for names of manufacturers.

5. **Steel Roof Deck —** (Unclassified) — Fluted, No. 22 MSG min galv 1-1/2 in. deep with 3-1/2 in. wide flutes spaced 6 in. OC. Ends overlapped a min 1-1/2 in. and welded to supports, 12 in. OC max. Adjacent units button-punched, welded or fastened with No. 12 by 1/2 in. long self-drilling, self-tapping steel screws.

6. **Spray-Applied Fire Resistive Materials* —** Applied by mixing with water and spraying to the beam (or joist) surfaces in one or more coats to the final min thicknesses shown below. Crest areas above the beam (or joist) shall be filled with the Spray-Applied Fire Resistive Materials. Surfaces must be clean and free of dirt, loose scale and oil. Min average and min individual density of 15 and 14 pcf, respectively, for Types 300, 300AC, 300ES, 300HS, 300N, 3000, 3000ES and SB. For Types 400AC and 400ES min average and min individual density of 22 and 19 pcf, respectively. For method of density determination see Design Information Section.

Restrained & Unrestrained Beam Rating Hr	Min Spray Applied Fire Resistive Mtl Thkns In Beam	Joist*
1	7/16	1-5/16
1-1/2	3/4	1-1/2
2	1-1/16	1-13/16
3	1-11/16	2-7/8
4	2-5/16	—

As an alternate to the thicknesses shown above for the steel beam, the thicknesses shown in the following table are applicable when the thickness applied to the beam's lower flange edges is reduced by one-half. The min thickness applied to the lower flange edges is 1/4 in.

Restrained & Unrestrained Beam Rating Hr	Min Spray Applied Fire Resistive Mtl Thkns In.
1	1/2
1-1/2	7/8
2	1-3/16
3	1-7/8
4	2-5/8

* Spray-Applied Fire Resistive Materials directly applied to joist contours. As an alternate, metal lath or nonmetallic fabric mesh secured to one side of joist to catch overspray when spraying following joist contours. Metal lath to be fully covered with Spray-Applied Fire Resistive Materials but with no min thickness requirements.

BERLIN CO LTD — Types 300, 300ES, 300N or SB.

GREENTECH THERMAL INSULATION PRODUCTS MFG CO L L C — Types 300, 300AC, or 400AC.

ISOLATEK INTERNATIONAL — Types 300, 300AC, 300ES, 300HS, 300N, SB, 400AC, 400ES, 3000 or 3000ES.

NEWKEM PRODUCTS CORP — Types 300, 300ES, 300N or SB.

6A. **Spray-Applied Fire Resistive Materials*— (As an alternate to Item 6) —** Applied by mixing with water and spraying to the beam (or joist) surfaces in one or more coats to the final min thicknesses shown below. Crest areas above the beam (or joist) shall be filled with the Spray-Applied Fire Resistive Materials. Surfaces must be clean and free of dirt, loose scale and oil. Min average and min individual density of 17.5 and 16 pcf, respectively, for Types 300TW. Min average and min individual density of 22 and 19 pcf, respectively, for Type 400. Min average and min individual density of 18 pcf and 17 pcf, respectively, for Type 280. For method of density determination see Design Information Section.

GREENTECH THERMAL INSULATION PRODUCTS MFG CO L L C — Type 400.

ISOLATEK INTERNATIONAL — Types 280, 300TW, or 400.

NEWKEM PRODUCTS CORP — Type 400.

7. **Glass Fiber Mesh —** (Optional) — Min 3/32 in. square mesh, coated fiberglass scrim fabric, weighing a min of 1.9 oz per sq yd, shall be attached to one side of each joist web member. The method of attachment must be sufficient to hold the mesh and Spray-Applied Fire Resistive Materials during application and curing of the material. An acceptable method of attaching the mesh is by embedding the mesh in min 1/4 in. long beads of hot melted glue. The beads of glue shall be spaced min 12 in. OC along the top chord of the bar joists.

Another method of attachment is the use of 1-1/4 in. long, 1/2 in. wide hairpin clips formed from 0.064 in. diam steel wire, alternating from top to bottom of the joist web member.

8. **Metal Lath —** (Optional — Not shown) — Diamond mesh, 3/8 in. expanded steel, min 1.7 lb per sq yd fastened to one side of joists using No. 18 SWG steel tie wire, located at the midheight of every other web member or 18 in. OC, whichever is less. Both sides of lath must be completely coated with Spray-Applied Fire Resistive Materials.

9. **Bridging —** (Not Shown) — Min 1-1/4 by 1-1/4 by 1/8 in. thick steel angles welded to top and bottom chords of each joist. Number and spacing of bridging angles per Steel Joist Institute specification. Bridging coated with the same thickness of Spray-Applied Fire Resistive Materials as the joist, see Item 6.

*** Indicates such products shall bear the UL or cUL Certification Mark for jurisdictions employing the UL or cUL Certification (such as Canada), respectively.**

STATE OF MISSOURI
Victor L. Mosby
Number
A-6471
REGISTERED ARCHITECT
3-23-2020
Victor L. Mosby, Architect
License - Missouri #A-6471

ACI
BOLAND
ARCHITECTS
1710 Wyandotte
Kansas City, MO 64108
T: 816.763.9600

ACI/Boland, Inc.
Kansas City | St. Louis
Licensee's Certificate of Authority Number:

STRUCTURAL, MECHANICAL, ELECTRICAL, & PLUMBING CONSULTANT

Professional Engineering Consultants, P.A.

623 Massachusetts Street, Suite 200
Lawrence, KS 66044

Licensee's Certificate of Authority Number:

Phone Number: 785.842.6464

Lee's Summit Medical Center
Hybrid OR Addition
2100 SE Blue Parkway
Lee's Summit, MO 64063

Date	3-23-2020
Job Number	3-19058
Drawn By	CL
Checked By	KC

Revision

Number	Date	Description

A0.5

© 2020 ACI/BOLAND, Inc

U.L. DESIGN ASSEMBLIES

3/25/2020 4:19:08 PM
C:\Users\clauer\Documents\3-19058_LSMC Hybrid OR_Arch_clauerVTDN7.rvt

2/17/2020 1:55:59 PM

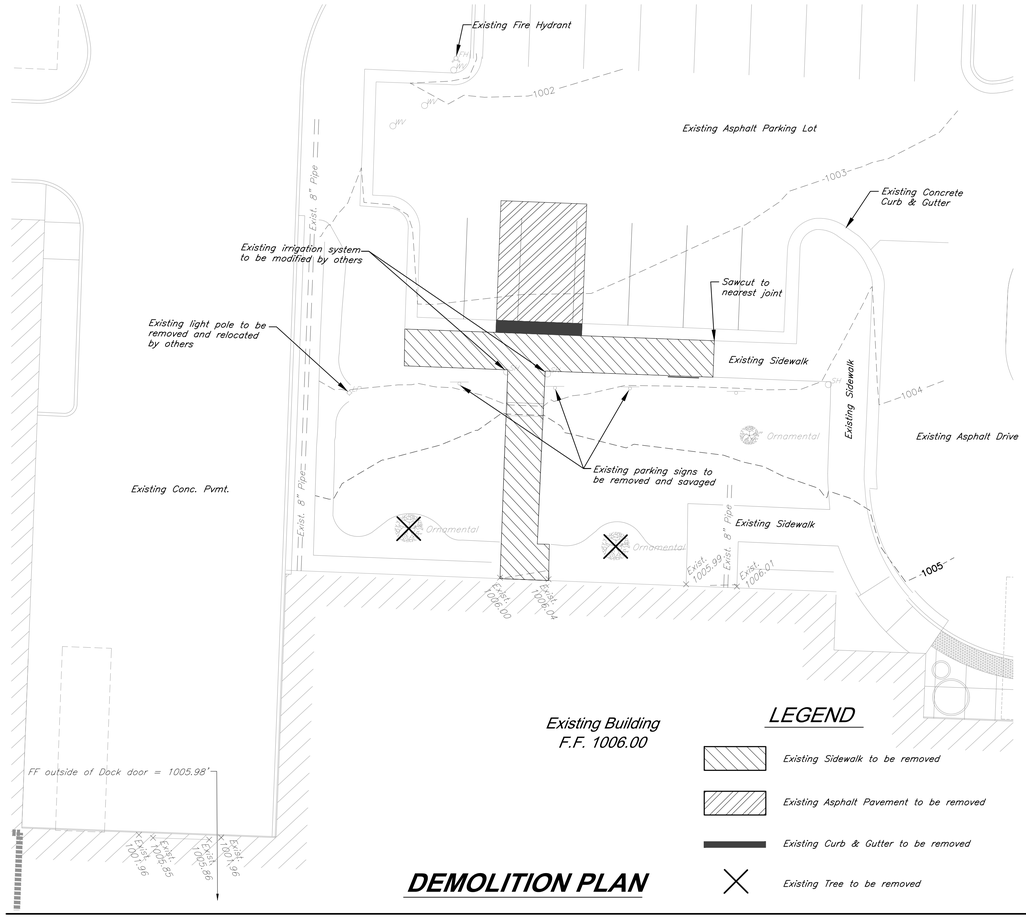

DEMOLITION PLAN

LEGEND

- Existing Sidewalk to be removed
- Existing Asphalt Pavement to be removed
- Existing Curb & Gutter to be removed
- Existing Tree to be removed

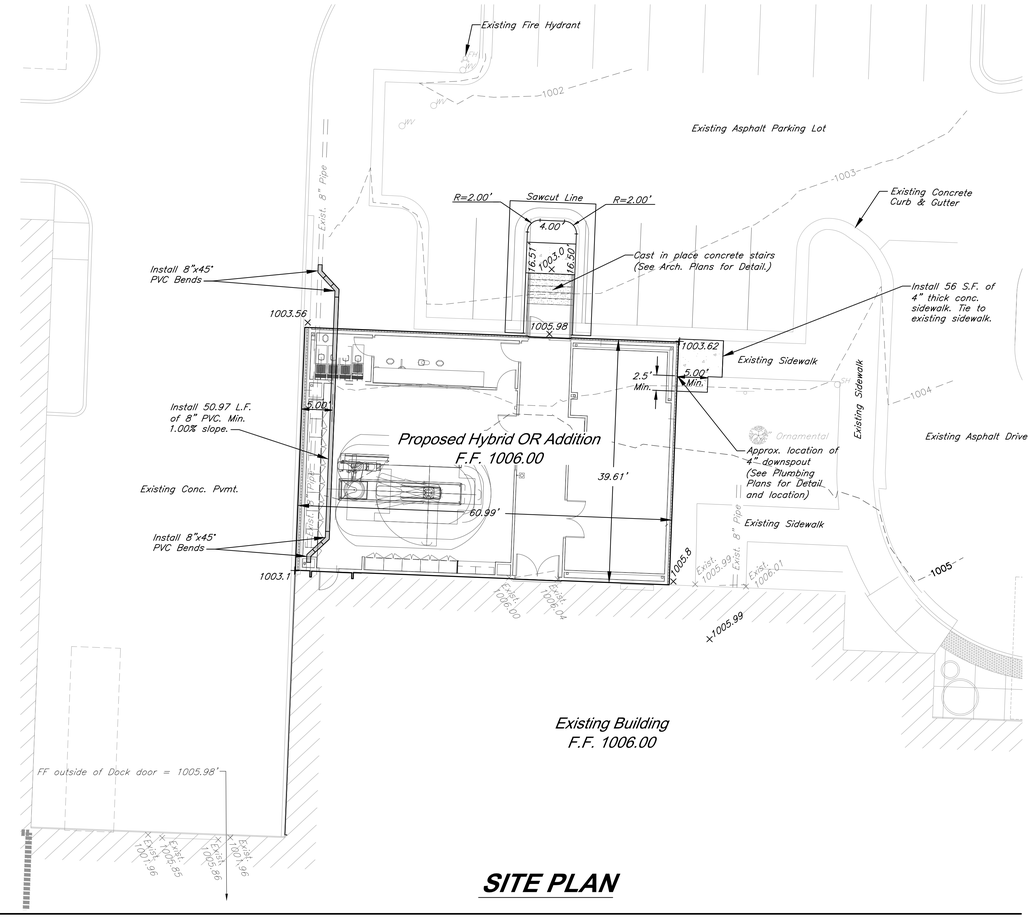

SITE PLAN

CAUTION!
Numerous Utilities on site. Contractor to verify location and elevation of all utilities prior to commencing construction.

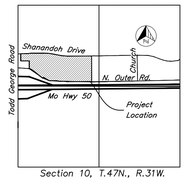

Section 10, T.47N., R.31W.

SECTION MAP

Scale: 1" = 2000'

DEMOLITION NOTES:

1. All material to be removed shall be disposed of off site by contractor. All disposal shall meet all applicable local, state, and federal guidelines.
2. Trees marked for removal shall be completely removed, including root balls.
3. Refer to Structural Drawings for demolition and modification of exist. building structures.
4. All pavement and concrete shall be cleanly sawcut prior to removal.
5. All demolition shall be as per these plans and shall adhere to all local, state, and federal laws, ordinances, codes, and statutes governing such demolition.
6. Contractor shall remove any existing facilities as required to complete the construction of all site improvements detailed on these plans.
7. Any Utility relocation shall be performed by respective Utility companies.

GENERAL NOTES:

1. The construction covered by these plans shall conform to all applicable standards and specifications of the Public Works Department of the City of Lee's Summit, Missouri, current usage. Contractor to contact public works inspections at (816) 969-7450 (48) hours prior to commencement of any construction activity.
2. Existing Utilities – The locations of existing underground utilities are approximate and have not been field verified by the Owner or it's representative. The Contractor shall determine the exact location of all existing utilities before commencing work. The Contractor is fully responsible for any and all damages occurring from his failure to do so. The Contractor shall coordinate the relocation of any utilities that may be encountered prior to the start of construction.
3. Slopes – Slopes shall be graded at a maximum slope of 3:1 (Horz.:Vert.). It is critical that grading shown in and around building pad be accomplished accurately so drainage away from building pad is maintained at all times.
4. Existing Site Conditions – The Contractor shall, prior to commencing work, investigate surface and subsurface conditions to be encountered across the project site and notify the Engineer if any discrepancies or changed conditions are noted.
5. The contractor is responsible for the protection of all property corners and section corners. Any property corners and/or section corners disturbed or damaged by construction activities shall be reset by a Registered Land Surveyor licensed in the State of Missouri, at the contractor's expense.
6. Cut/Fill – All fills are to be made with suitable structural fill material in accordance with the project geo-technical engineer recommendations. Special inspections are required. Contractor shall coordinate inspections with the Owner.
7. The Contractor shall be responsible for the restoration of the right-of-way and for damaged improvements such as curbs, sidewalks, street light and traffic signal junction boxes, traffic signal loop lead ins, signal poles, etc. Damaged improvements shall be repaired in conformance with the latest City standards and to the City's satisfaction.
8. The Contractor shall coordinate and conduct a pre-construction walk-thru with the City of Lee's Summit Public Works Department to review and document the condition of all existing public improvements (i.e. pavements, walks landscaping, etc.) surrounding the site.
9. All disturbed areas within the Public right-of-way shall be sodded. All other disturbed areas shall be seeded in accordance with the project specifications.

LEGEND OF SYMBOLS

- Signs
- Gas Test Station
- Water Meter
- Sprinkler Valve/Boxes
- Water Vault
- Sanitary Sewer Manhole
- Electric Manhole
- Street Light
- Power Pole
- Traffic Signal
- Elec. Box
- Guy Pole
- Right of Way Marker
- Guy Anchor
- Flood Light
- Fire Hydrant
- Existing Storm Sewer Line
- Existing Sanitary Sewer Line
- Existing Water Line
- Existing Gas Line
- Underdrain
- Existing Fence Line
- Telephone Vault
- Backflow Preventer
- Existing Easement
- Property Line
- Existing Tree To Be Removed
- Existing Tree To Remain
- Existing Trees
- Existing Contours
- Proposed Contours
- Boring Location
- Concrete Pavement
- Existing Top of Curb Elevation
- Existing Spot Grade Elevation
- Existing Building
- Proposed Spot Grade Elevation

FLOOD PLAIN:

The subject property lies within Zone C "Areas of minimal flooding" as shown on and according to FIRM Community-Panel Number 290174 0007 C, Dated August 3, 1989.

PROJECT BENCHMARK:

" □ " Cut on the North side of Concrete Base of North Post of Todd George Road Exit Sign for Westbound U.S. Highway 50. Approximately 30' South of the Centerline of the Outer Road.

Elevation = 1012.79

10' 0' 10' 20'
SCALE : 1 INCH = 10 FEET

CIVIL ENGINEERING BY:

GBA
9801 Renner Boulevard
Lenexa, Kansas 66219
913.492.0400
www.gbateam.com

PRELIMINARY, NOT FOR CONSTRUCTION, RECORDING PURPOSES, OR IMPLEMENTATION
2/17/2020 1:55:59 PM

ACI BOLAND ARCHITECTS

1710 Wyandotte
Kansas City, MO 64108
T: 816.763.9600

ACI/Boland, Inc.
Kansas City | St. Louis
Licensee's Certificate of Authority Number:

STRUCTURAL, MECHANICAL, ELECTRICAL, & PLUMBING CONSULTANT

Professional Engineering Consultants, P.A.

623 Massachusetts Street, Suite 200
Lawrence, KS 66044

Licensee's Certificate of Authority Number:

Phone Number: 785.842.6464

Lee's Summit Medical Center

Hybrid OR Addition
2100 SE Blue Parkway
Lee's Summit, MO 64063

Date	2-6-2020
Job Number	3-19058
Drawn By	Author
Checked By	Checker

Revision

Number	Date	Description

C100

© 2020 ACI/BOLAND, Inc

SITE PLAN

C:\Users\clauer\Documents\3-19058_LSMC Hybrid OR_Arch_clauerVTDN7.rvt

3/25/2020 4:19:39 PM

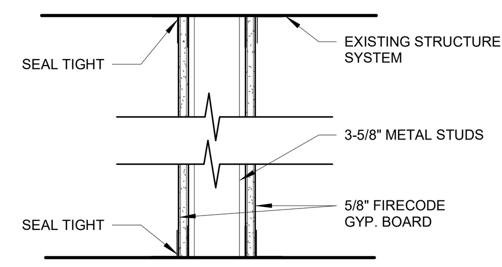

WHERE DUST PARTITIONS ARE TO REMAIN THROUGH CONSTRUCTION, THEY SHALL BE CONSTRUCTED OF 3-5/8" METAL STUDS WITH CONTINUOUS TOP AND BOTTOM RUNNERS. PARTITIONS SHALL EXTEND TIGHT FROM FLOOR TO THE EXISTING CEILING OR STRUCTURE ABOVE, AND COPED AROUND DUCTS, PIPES, ETC., THAT PENETRATE THE PARTITION. THE ENTIRE PARTITION SHALL BE COVERED WITH 5/8" FIRE RATED GYP. BOARD SCREWED TO STUDS, ALL JOINTS BETWEEN SHEATHING, AT WALLS, AT FLOORS, CEILINGS, AROUND PIPES, ETC., TAPED AND SEALED TIGHT TO ENSURE DUST-PROOFING.

THE CONTRACTOR SHALL COVER AND SEAL IN A DUST-TIGHT MANNER ALL EXISTING OPENINGS, GRILLES, JOINTS AROUND DOORS AND FRAMES, ETC., WITH FIRE RETARDANT SHEET AND/OR TAPE AS APPROPRIATE WHERE SUCH OPENINGS, ETC., OCCUR IN EXISTING PARTITIONS SEPARATING EXISTING AREAS FROM CONSTRUCTION AREAS. THE CONTRACTOR SHALL MAINTAIN AND REPAIR ANY DUST BARRIERS AS DETERMINED BY, AND TO THE SATISFACTION OF, THE OWNER.

DP SMOKE TIGHT NON-COMBUSTIBLE CONSTRUCTION PARTITION
1 1/2" = 1'-0"

DEMOLITION LEGEND

	NOT IN SCOPE
	EXISTING TO REMAIN
	WALLS, DOORS, EQUIPMENT, FIXTURES, ETC. INDICATED BY DASHED LINES WITHIN THE AREA OF CONSTRUCTION SHALL BE REMOVED. REFER TO THIS SHEET FOR ARCHITECTURAL DEMOLITION NOTES.
	EXISTING DOOR, FRAME AND HARDWARE TO REMAIN
	REMOVE EXISTING DOOR AND HARDWARE, EXISTING FRAME TO REMAIN. PREPARE FRAME FOR NEW DOOR AND HARDWARE.
	REMOVE EXISTING DOOR, FRAME AND HARDWARE COMPLETELY. PREPARE EXISTING CONSTRUCTION TO REMAIN AS REQUIRED FOR NEW CONSTRUCTION.
	REMOVE EXISTING DOOR, FRAME, HARDWARE AND WALL CONSTRUCTION COMPLETELY.
DP	DUST PARTITIONS - THE CONTRACTOR SHALL MAKE EVERY EFFORT TO ENSURE THE EXISTING BUILDING TO BE COMPLETELY PROTECTED AGAINST INFILTRATION OF DUST AND MOISTURE DURING THE COURSE OF DEMOLITION/ CONSTRUCTION WITH DUST PARTITIONS ACROSS CORRIDORS AND OPENINGS THRU EXISTING WALLS. ALL CONSTRUCTION WORK CREATING ANY TYPE OF DUST THROUGHOUT THE BUILDING SHALL BE SHIELDED BY DUST PROTECTION. PROVIDE DOOR OPENING AS REQUIRED FOR EMERGENCY EGRESS.
DB	(2) LAYERS 6 MIL PVC W/ STUDS @ 4'-0" O.C. DUST BARRIER. THE CONTRACTOR SHALL MAKE EVERY EFFORT TO ENSURE THE EXISTING BUILDING TO BE COMPLETELY PROTECTED AGAINST THE INFILTRATION OF DUST & MOISTURE DURING THE COURSE OF DEMOLITION/ CONSTRUCTION. PROVIDE DOOR OPENING AS REQUIRED FOR EMERGENCY EGRESS.

GENERAL DEMOLITION NOTES

1. THE OWNER SHALL VACATE THE EXISTING ROOMS AS INDICATED ON THE PLAN AND BE RESPONSIBLE FOR THE REMOVAL OF ANY EQUIPMENT WHICH IS TO REMAIN THE PROPERTY OF THE OWNER PRIOR TO ANY WORK DONE BY THE CONTRACTOR FOR THIS PORTION OF THE SEQUENCE.

2. INSTALL TEMPORARY DUST PROTECTION/ PARTITION AS INDICATED ON THE PLAN TO CONTAIN DEMOLITION/ CONSTRUCTION DUST AND DEBRIS WITHIN THE AREA OF CONSTRUCTION. REFER TO DUST PARTITION "DP" ON THIS SHEET.

3. IT IS THE INTENT OF THIS DEMOLITION TO REMOVE ALL EXISTING CONSTRUCTION WHICH CONFLICTS WITH THE INTENT OF THE NEW CONSTRUCTION. EVERY DEMOLITION DETAIL MAY NOT NECESSARILY BE COVERED ON THESE DRAWINGS. FIELD VERIFY THE EXTENT OF ALL DEMOLITION.

4. THE CONTRACTOR SHALL USE EXTREME CARE IN THE PROTECTION OF ALL ADJACENT AREAS FOR IT IS IMPERATIVE TO PROVIDE CONTINUOUS OPERATION OF ALL OCCUPIED AREAS DURING THE DEMOLITION, CONSTRUCTION AND RENOVATION WITHIN THIS AND ALL SEQUENCES OF CONSTRUCTION.

5. ALL PARTITIONS, DOORS, EQUIPMENT, ETC. INDICATED BY DASHED LINES ON THIS PLAN SHALL BE REMOVED.

6. ALL DEMOLITION DESCRIBED IN THESE DOCUMENTS SHALL BE COORDINATED WITH PHASING WORK REQUIRED TO COMPLETE THE WORK.

7. THE CONTRACTOR SHALL COORDINATE ALL DEMOLITION WORK W/ OCCUPIED SPACES BELOW AND SHALL NOTIFY OWNER TWO WEEKS PRIOR TO COMMENCING WORK. SUCH SPACES ARE TO REMAIN OCCUPIED DURING DEMOLITION AND ALL WORK SHALL BE PERFORMED IN SUCH A MANNER TO MINIMIZE DISRUPTION TO OCCUPIED SPACES. EXISTING FLOOR, WALL AND CEILING FINISHES TO REMAIN SHALL BE PROTECTED AND ANY DAMAGE DONE AS A RESULT OF DEMOLITION WORK SHALL BE REPAIRED.

8. IN AREAS SCHEDULED FOR DEMOLITION, THE CONTRACTOR SHALL REMOVE ALL ACCESSORIES, GRAB BARS, MIRRORS, SOAP AND PAPER TOWEL DISPENSERS, SHELVES, BULLETIN BOARDS, ETC., SHALL BE TURNED OVER TO THE OWNER, EXCEPT FOR RELOCATED ITEMS.

9. WHERE NEW FINISHES ARE CALLED FOR, REMOVE AND DISCARD EXISTING FLOORING, CEILINGS AND WALL COVERING THROUGH-OUT AREA DESIGNATED FOR NEW CONSTRUCTION AND PREP EXISTING FLOOR AND WALL SUBSTRATE TO RECEIVE THE INSTALLATION OF NEW FINISH AS SCHEDULED.

10. AT DISSIMILAR FLOOR ELEVATIONS, AFTER THE EXISTING CONSTRUCTION HAS BEEN REMOVED, FEATHER EPOXY GROUT TOPPINGS TO EACH FLOOR ELEVATION AND GRIND SMOOTH. AT DISSIMILAR FLOOR MATERIALS, AND/OR AT JUNCTIONS BETWEEN EXISTING FLOOR, PROVIDE THE APPROPRIATE TRANSITION STRIP AT THE EDGE.

11. AT VARIATIONS IN WALL SURFACES AFTER THE EXISTING CONSTRUCTION HAS BEEN REMOVED, FEATHER JOINT COMPOUND AND SAND SMOOTH.

12. WHERE CEILING IS TO REMAIN, REMOVE ALL DAMAGED CEILING PANELS/ TILES AND REPLACE WITH NEW TO MATCH EXISTING.

13. REMOVE AND RETURN TO THE OWNER ALL EXISTING PLUMBING FIXTURES. CAP ALL SUPPLY AND WASTE LINES AS REQUIRED. REFER TO PLUMBING DRAWINGS FOR ADDITIONAL INFORMATION.

14. THE CONTRACTOR SHALL PATCH TO MATCH ADJACENT SURFACES OF EXISTING WALLS AND FLOORS IN ALL AREAS THAT REQUIRE THE REMOVAL OF GENERAL MECHANICAL, ELECTRICAL AND PLUMBING WORK AND OF EQUIPMENT AND FIXTURES.

15. THE CONTRACTOR SHALL PROVIDE FOR ALL NECESSARY TEMPORARY RELOCATION AND MAINTENANCE OF ALL EXISTING UTILITIES WHICH ARE CURRENTLY IN USE AND WHICH MUST BE TEMPORARILY RELOCATED DURING CONSTRUCTION OF NEW AREAS AND RENOVATION OF EXISTING AREAS THROUGH EACH SEQUENCE OF CONSTRUCTION.

16. REFER TO MECHANICAL, ELECTRICAL, AND PLUMBING DRAWINGS FOR WORK REQUIRED IN THIS STEP OF THE SEQUENCE OF CONSTRUCTION.

17. WHERE REMOVAL OF EXISTING PARTITIONS, EQUIPMENT, ETC. DISTURBS EXISTING MECHANICAL, PLUMBING OR ELECTRICAL SERVICES, THE CONTRACTOR SHALL MAKE PERMANENT REVISIONS AS REQUIRED AND IF NECESSARY, PROVIDE TEMPORARY SERVICES TO AREAS NOT SCHEDULED FOR DEMOLITION AND RENOVATION.

18. WHERE EXISTING WALLS, CEILINGS, OR FLOORS ARE DAMAGED BY THE CONTRACTOR FOR ACCESS TO SERVICES AND NEW CONSTRUCTION WHICH MAY NOT BE SCHEDULED OR SHOWN ON THE DRAWINGS, THE CONTRACTOR SHALL BE RESPONSIBLE TO PATCH TO MATCH MATERIAL AND FINISHES TO ORIGINAL CONDITIONS. IF EXISTING FINISHES CANNOT BE MATCHED, THE ENTIRE WALL, CEILING, OR FLOOR SHALL BE REFINISHED TO THE NEAREST CORNER OR POSITIVE BREAKING POINT.

19. WHEN DEMOLITION CAUSES OR EXPOSES DAMAGE TO FLOOR SLAB, WALL, OR CEILING SURFACES WHICH WILL REMAIN EXPOSED IN THE FINISHED WORK, SUCH CONDITIONS SHALL BE REPAIRED AND LEVELED AS REQUIRED TO RECEIVE NEW FINISHES.

20. CLEAN AIR GRILLES AND LIGHT FIXTURES THROUGHOUT PROJECT AREA UPON COMPLETION OF WORK.

21. WHERE EXISTING PHONE, DATA, OR PHONE/DATA OUTLETS ARE REMOVED, THE CONTRACTOR SHALL USE EXTREME CARE IN PULLING WIRE THROUGH THE EXISTING CONDUITS, COIL AND WRAP ABOVE EXISTING CEILING FOR REUSE.

22. WHERE EXTERIOR WALLS, WINDOWS, AND/OR DOORS ARE BEING REMOVED, THE CONTRACTOR WILL BE RESPONSIBLE TO CONSTRUCT TEMPORARY PARTITIONS AS REQUIRED TO ENSURE THAT THE EXISTING BUILDINGS REMAIN WATERTIGHT AND WITHOUT DRAFTS DURING DEMOLITION WORK. THESE PARTITIONS SHALL REMAIN IN PLACE DURING THE NEW CONSTRUCTION WORK, OR AS REQUIRED TO MAINTAIN THIS SEPARATION.

23. THE CONTRACTOR SHALL FILL ALL OPENINGS IN EXTERIOR WALLS RESULTING FROM THE REMOVAL OF LOUVERS, EXHAUST FANS, ETC. THE OPENINGS SHALL BE FILLED FLUSH WITH AND OF THE SAME MATERIALS AS THE SURROUNDING WALLS.

24. PROVIDE SHORING AND BRACING AS REQUIRED DURING DEMOLITION AND NEW CONSTRUCTION.

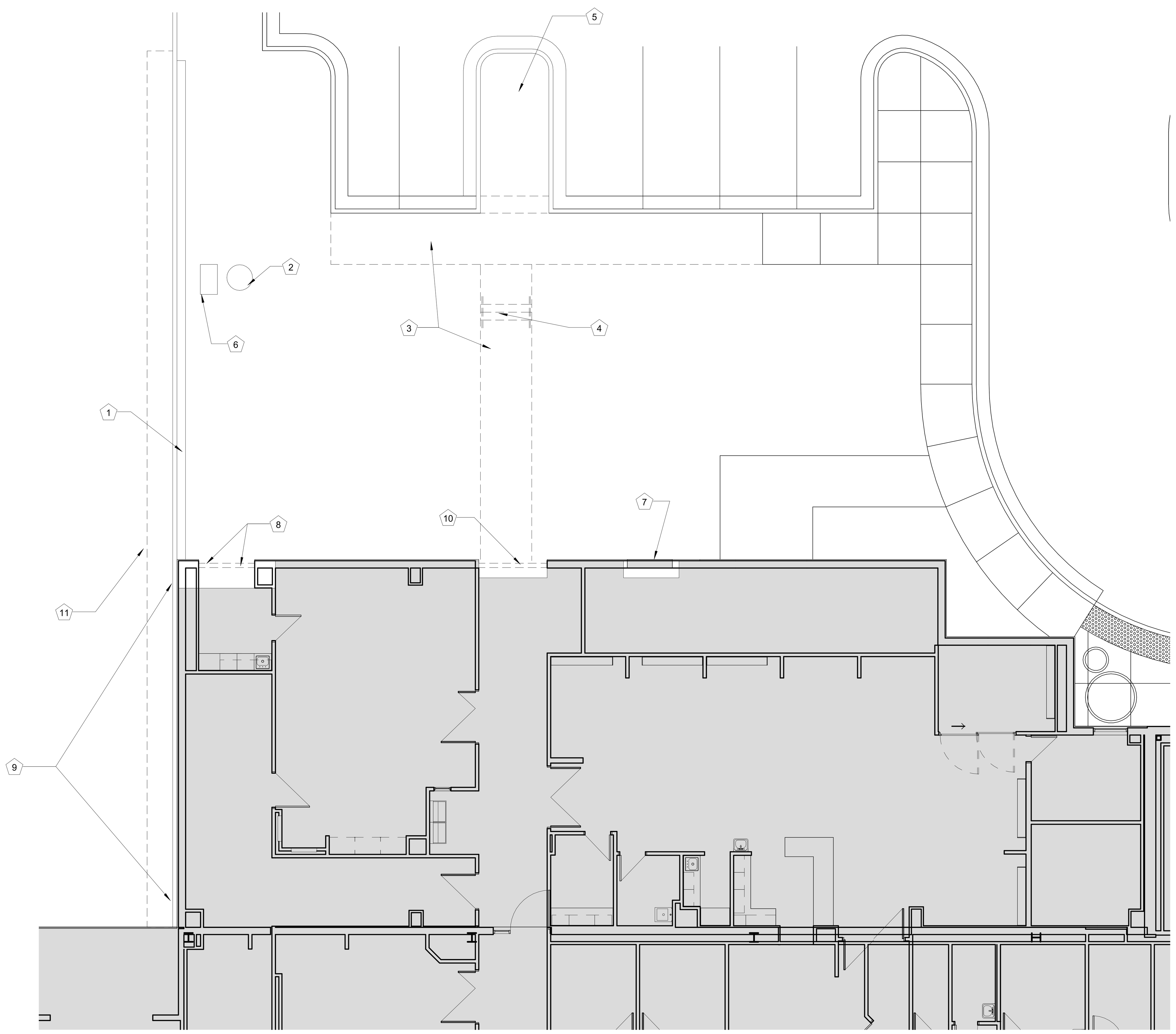

B5 DEMOLITION PLAN
1/8" = 1'-0"

KEYNOTES - DEMO PLAN

NUMBER	COMMENTS
1	REMOVE EXISTING STEEL GUARDRAIL AND CONCRETE WALL
2	RELOCATE EXISTING LIGHT POLE AND CONCRETE BASE PER ELECT
3	REMOVE EXISTING CONCRETE SIDEWALK AND STEPS
4	REMOVE EXISTING HANDRAIL
5	REMOVE EXISTING ASPHALT PAVEMENT
6	U/G BIOHAZARD HOLDING TANK NOTED ON EXISTING PLAN, BUT IS NOT BELIEVED TO BE INSTALLED. BE CAUTIOUS WHEN EXCAVATING THIS AREA
7	REMOVE EXISTING LOUVER IN WALL AND RELOCATE PER MEP DRAWINGS. INFILL WALL TO MATCH ADJACENT MATERIALS. CUT NEW OPENING IN WALL (ABOVE CLG) FOR NEW DUCTWORK.
8	REMOVE EXISTING EXTERIOR WALL CONSTRUCTION FOR CONNECTION WITH NEW ADDITION. PATCH EXISTING FLOOR, WALLS AND CEILING AS REQUIRED.
9	REPLACE EXISTING EIFS BASE WITH NEW SPLIT FACE CMU
10	REMOVE EXISTING DOOR, FRAME AND GLASS.
11	REMOVE EXISTING PAVEMENT FOR NEW WORK AT EXISTING BUILDING AND NEW ADDITION. PATCH TO MATCH EXISTING PAVEMENT.

STATE OF MISSOURI
Victor L. Mosby
Number
A-6471
REGISTERED ARCHITECT
3-23-2020
Victor L. Mosby - Architect
License - Missouri #A-6471

ACI BOLAND ARCHITECTS
1710 Wyandotte
Kansas City, MO 64108
T: 816.763.9600

ACI/Boland, Inc.
Kansas City | St. Louis
Licensee's Certificate of Authority Number:

STRUCTURAL, MECHANICAL, ELECTRICAL, & PLUMBING CONSULTANT

Professional Engineering Consultants, P.A.

623 Massachusetts Street, Suite 200
Lawrence, KS 66044

Licensee's Certificate of Authority Number:

Phone Number: 785.842.6464

Lee's Summit Medical Center

Hybrid OR Addition
2100 SE Blue Parkway
Lee's Summit, MO 64063

Date	3-23-2020
Job Number	3-19058
Drawn By	CL
Checked By	KC

Revision

Number Date Description

AD1.1

© 2020 ACI/BOLAND, Inc

DEMOLITION PLAN

C:\Users\clauer\Documents\3-19058_LSMC Hybrid OR_Arch_clauerVTDN7.rvt

3/25/2020 4:19:09 PM

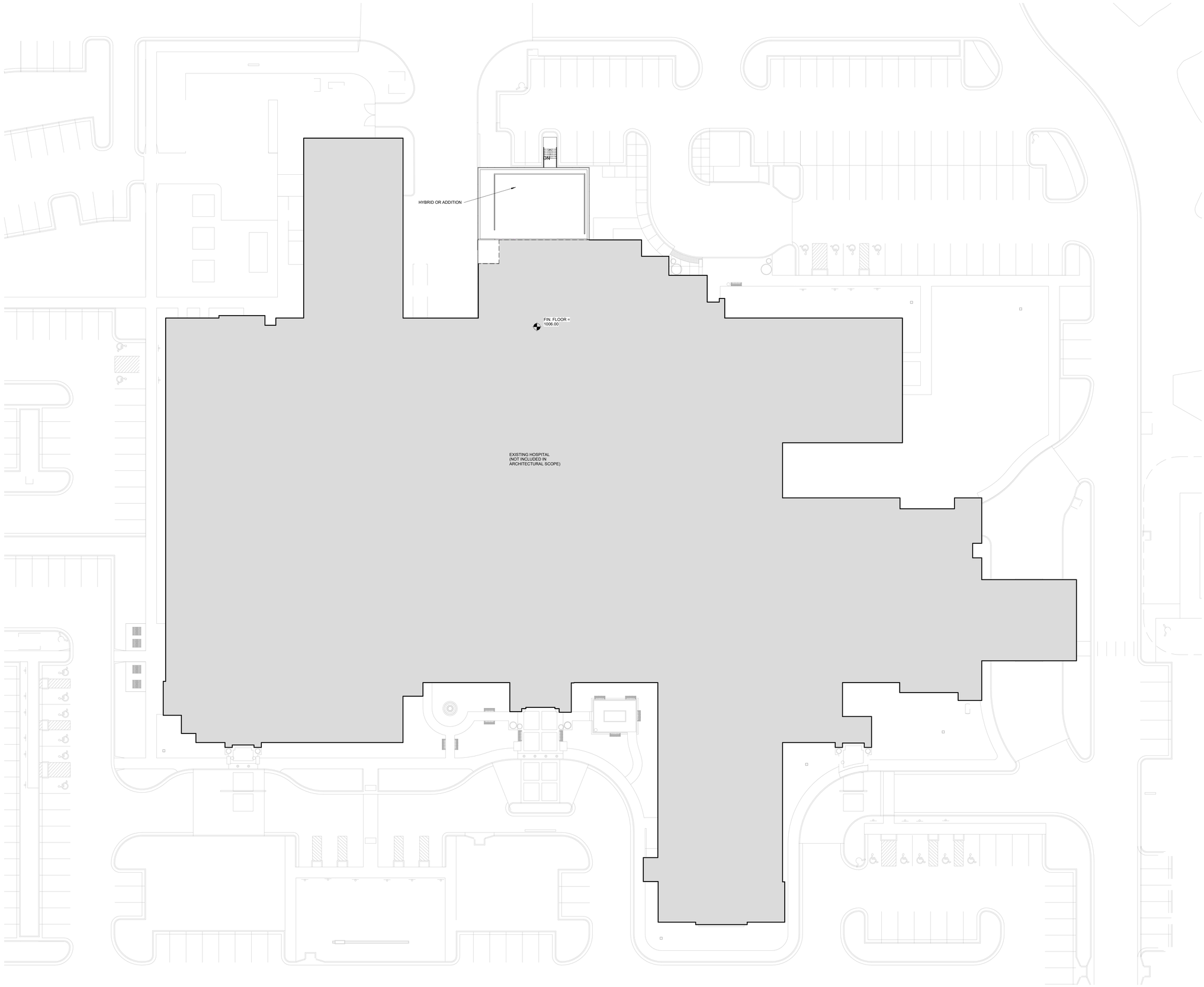

A1 SITE PLAN
1" = 20'-0"

NORTH

C:\Users\clauer\Documents\3-19058_LSMC Hybrid OR_Arch_clauer\YTDN7.rvt

STATE OF MISSOURI
Victor L. Mosby
Number
A-6471
REGISTERED ARCHITECT

3-23-2020

Victor L. Mosby Architect
License - Missouri #A-6471

ACI
BOLAND
ARCHITECTS

1710 Wyandotte
Kansas City, MO 64108
T: 816.763.9600

ACI/Boland, Inc.
Kansas City | St. Louis
Licensee's Certificate of Authority Number:

STRUCTURAL, MECHANICAL, ELECTRICAL, & PLUMBING CONSULTANT

Professional Engineering Consultants, P.A.

623 Massachusetts Street, Suite 200
Lawrence, KS 66044

Licensee's Certificate of Authority Number:

Phone Number: 785.842.6464

Lee's Summit Medical Center

Hybrid OR Addition
2100 SE Blue Parkway
Lee's Summit, MO 64063

Date	3-23-2020
Job Number	3-19058
Drawn By	RN
Checked By	KC

Revision

Number	Date	Description

A2.0

© 2020 ACI/BOLAND, Inc

SITE PLAN

3/25/2020 4:19:12 PM

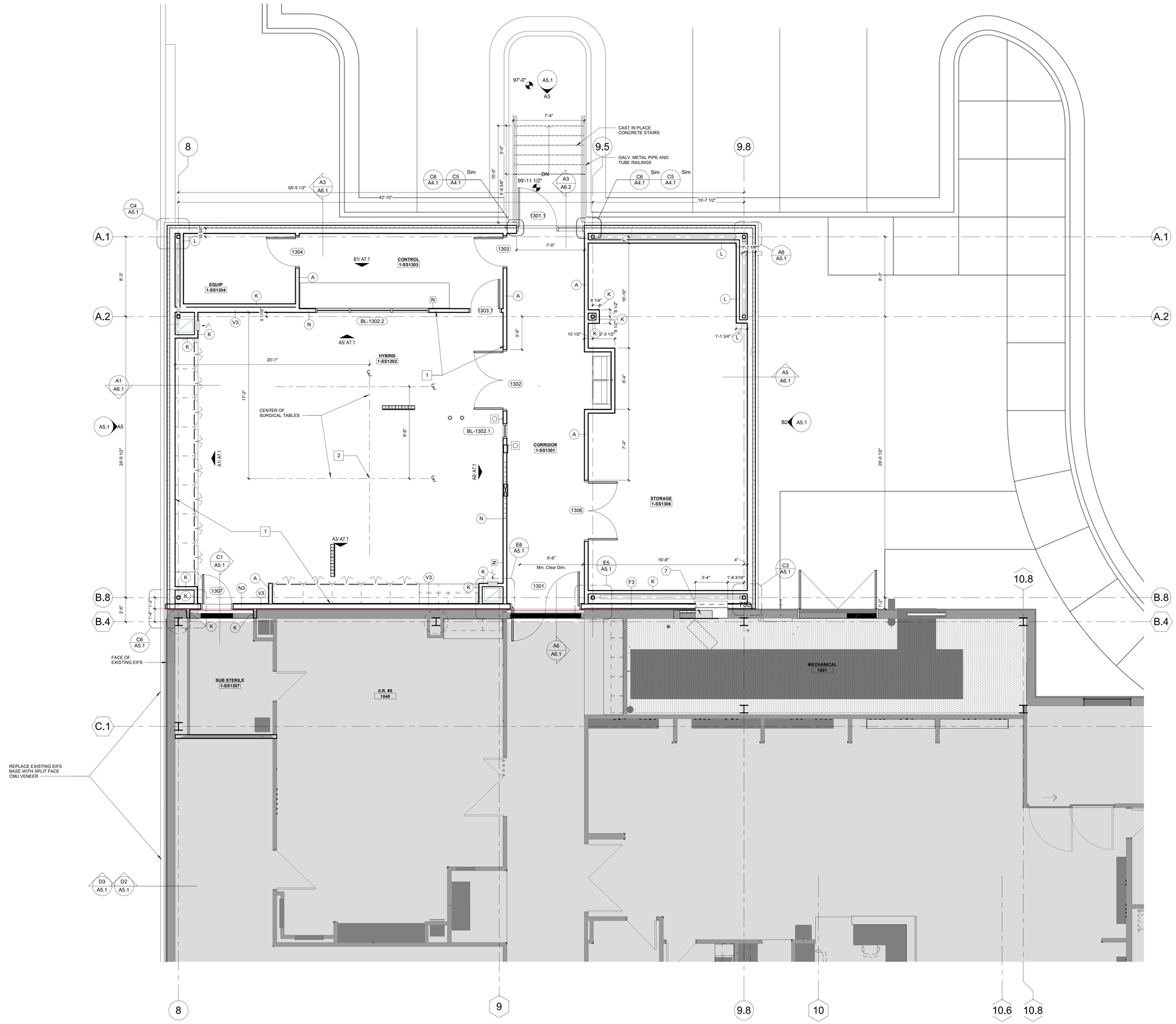

A1 FIRST FLOOR PLAN
1/4" = 1'-0"

NORTH

KEYNOTES - FLOOR

NUMBER	COMMENTS
1	ALL WALLS, DOORS & BORROWED LITE VIEW WINDOWS TO RECEIVE LEAD LINING IN THIS ROOM. RE: PHYSICISTS REPORT FOR THICKNESS
2	ISOCENTER WORKPOINT RE: VENDOR DRAWINGS FOR NEW HYBRID OR EQUIPMENT

FLOOR PLAN LEGEND

- CONCRETE SLAB INFILL RE: STRUCT
- NOT IN ARCHITECTURAL SCOPE
- NOT IN SCOPE
- NEW WALL
- EXISTING WALL
- EXISTING EXPANSION JOINT
- DOOR NO. 101-A
- NEW DOOR
- EXISTING DOOR

STATE OF MISSOURI
Victor L. Mosby
Number
A-6471
REGISTERED ARCHITECT

3-23-2020

Victor L. Mosby Architect
License - Missouri #A-6471

ACI BOLAND ARCHITECTS
1710 Wyandotte
Kansas City, MO 64108
T: 816.763.9600

ACI/Boland, Inc.
Kansas City | St. Louis
Licensee's Certificate of Authority Number:

STRUCTURAL, MECHANICAL, ELECTRICAL, & PLUMBING CONSULTANT

Professional Engineering Consultants, P.A.

623 Massachusetts Street, Suite 200
Lawrence, KS 66044

Licensee's Certificate of Authority Number:

Phone Number: 785.842.6464

Lee's Summit Medical Center

Hybrid OR Addition
2100 SE Blue Parkway
Lee's Summit, MO 64063

Date	3-23-2020
Job Number	3-19058
Drawn By	CL
Checked By	KC

Revision

Number	Date	Description

A2.1

© 2020 ACI/BOLAND, Inc

FIRST FLOOR DIMENSION PLAN

C:\Users\clauer\Documents\3-19058_LSMC Hybrid OR_Arch_clauerVTDN7.rvt

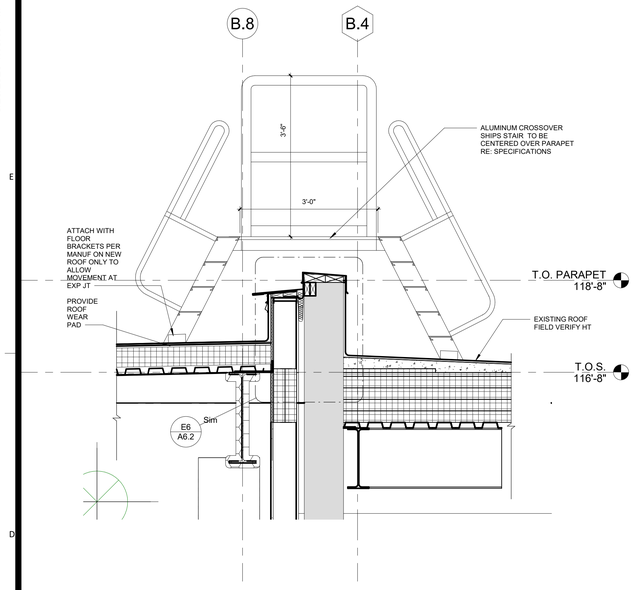

D6 SECTION DETAIL AT CROSSOVER LADDER
3/4" = 1'-0"

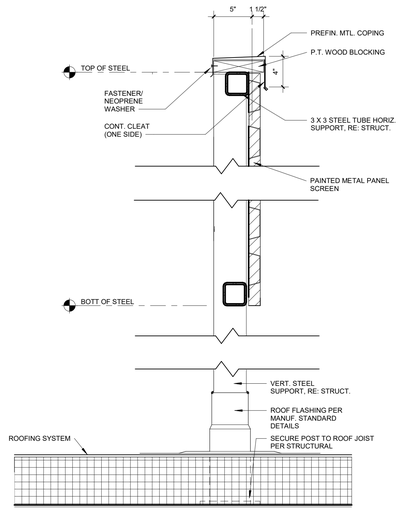

D4 ROOF SCREEN DETAIL
1 1/2" = 1'-0"

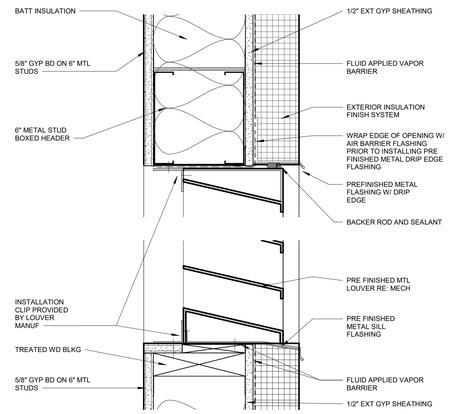

D3 DETAIL AT EXT LOUVER
3" = 1'-0"

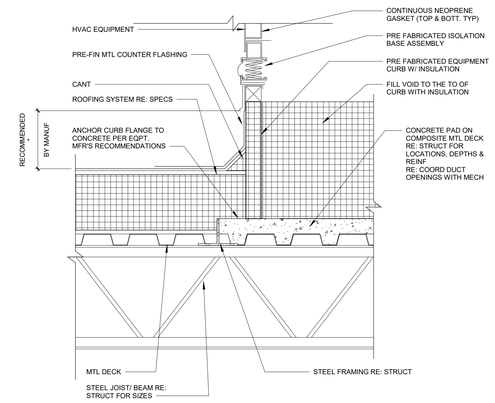

D1 ISOLATION BASE FOR HVAC EQUIPMENT
1 1/2" = 1'-0"

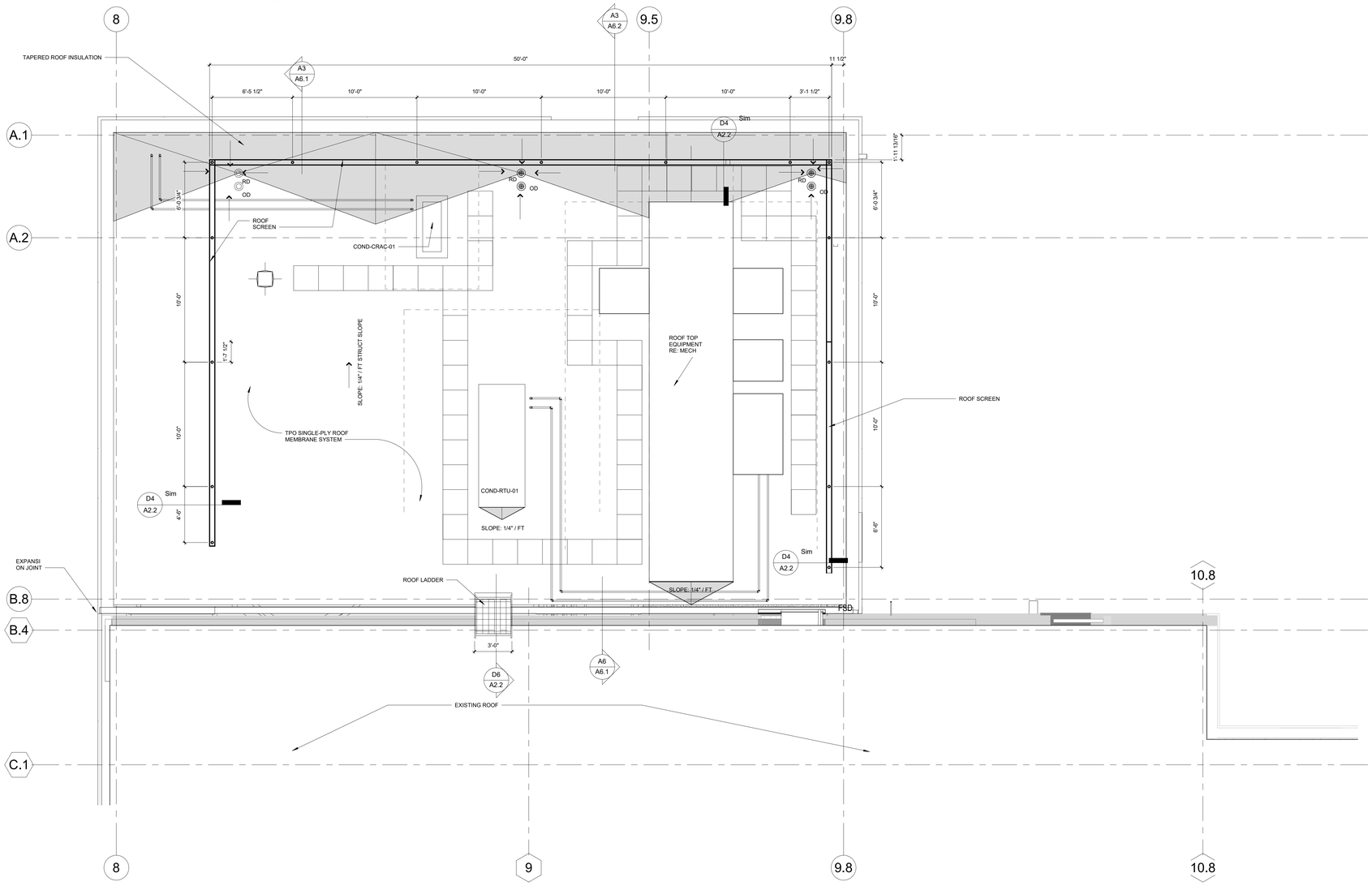

A1 ROOF PLAN
1/4" = 1'-0"

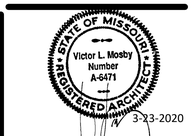

3-23-2020

Victor L. Mosby Architect
License - Missouri #A-6471

ACI BOLAND ARCHITECTS
1710 Wyandotte
Kansas City, MO 64108
T: 816.763.9600

ACI/Boland, Inc.
Kansas City | St. Louis
Licensee's Certificate of Authority Number:

STRUCTURAL, MECHANICAL, ELECTRICAL, & PLUMBING CONSULTANT

Professional Engineering Consultants, P.A.

623 Massachusetts Street, Suite 200
Lawrence, KS 66044

Licensee's Certificate of Authority Number:

Phone Number: 785.842.6464

Lee's Summit Medical Center

Hybrid OR Addition
2100 SE Blue Parkway
Lee's Summit, MO 64063

Date	3-23-2020
Job Number	3-19058
Drawn By	CL
Checked By	KC

Revision

Number	Date	Description

A2.2

© 2020 ACI/BOLAND, Inc

ROOF PLAN

3/25/2020 4:19:15 PM
C:\Users\clauer\Documents\3-19058_LSMC Hybrid OR_Arch_clauerVTDN7.rvt

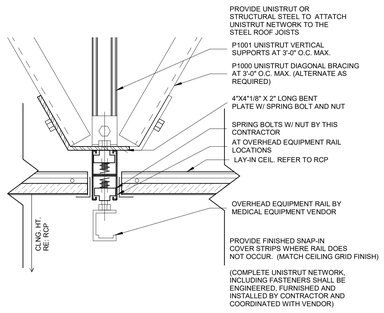

NOTE: SEE MEDICAL EQUIPMENT VENDOR DRAWINGS FOR ADDITIONAL INFORMATION

E4 CEILING DETAIL
3" = 1'-0"

NOTE:

1. PROVIDE UNISTRUT OR STRUCTURAL STEEL TO ATTACH UNISTRUT NETWORK TO STRUCTURE ABOVE.
2. VERIFY SUPPORTING LOAD W/ LIGHT MANUF. MODIFY SUPPORT AS REQ'D. BY LIGHT MANUF. SPECS.

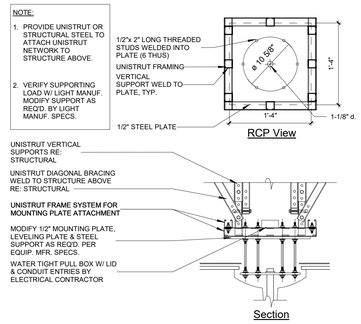

NOTE: SEE MEDICAL EQUIPMENT VENDOR DRAWINGS FOR ADDITIONAL INFORMATION

E3 LIGHT SUPPORT
1" = 1'-0"

GENERAL NOTES

1. THIS PLAN SHALL BE USED TO COORDINATE THE CEILING LAYOUT WITH MECHANICAL AND ELECTRICAL WORK. VERIFY THE EXACT QUANTITY REQUIRED.
2. CONTRACTOR TO REFER TO THE ELECTRICAL PLANS FOR ACTUAL LIGHTING SIZES AND FIXTURE TYPES.
3. SEE SPECIFICATIONS FOR CEILING TYPES.
4. REFER TO ARCHITECTURAL FLOOR PLANS FOR MATERIAL LEGEND OF ALL TYPES.
5. ALL CEILINGS SHALL BE 9'-0" AFF UNLESS OTHERWISE NOTED.

KEYNOTES - RCP

Number	Comments
1	PROVIDE NEW CEILING PATCH TO MATCH EXISTING

CEILING LEGEND

- RECESSED CAN LIGHT FIXTURE RE: ELECT
- 2X4 RECESSED/SURFACE LED LIGHT FIXTURE RE: ELECT
- 2X2 RECESSED/SURFACE LEDLIGHT FIXTURE RE: ELECT
- SURFACE-MOUNTED LIGHT FIXTURE RE: ELECT
- PENDANT LIGHT FIXTURE RE: ELECT
- WALL SCONCE LIGHT FIXTURE RE: ELECT
- 2X4 RECESSED/SURFACE FLUORESCENT LIGHT FIXTURE W/ PARA-CUBE LENS RE: ELECT
- 2X4 RECESSED/SURFACE FLUORESCENT PSYCHIATRIC LIGHT FIXTURE RE: ELECT
- GYP BOARD CEILING - PAINTED W/ CONTROL JOINTS PER SPECS
- 2X2/2x4 LAY-IN ACOUSTICAL CEILING
- EXIT LIGHT WITH FIXTURE MARK CEILING MOUNTED RE: ELECT
- EXIT LIGHT WITH FIXTURE MARK WALL BRACKET RE: ELECT
- SUPPLY AIR GRILLE RE: MECH
- RETURN AIR OR EXHAUST GRILLE RE: MECH
- 9'-0" SOFFIT HEIGHT
- 9'-0" CEILING HEIGHT

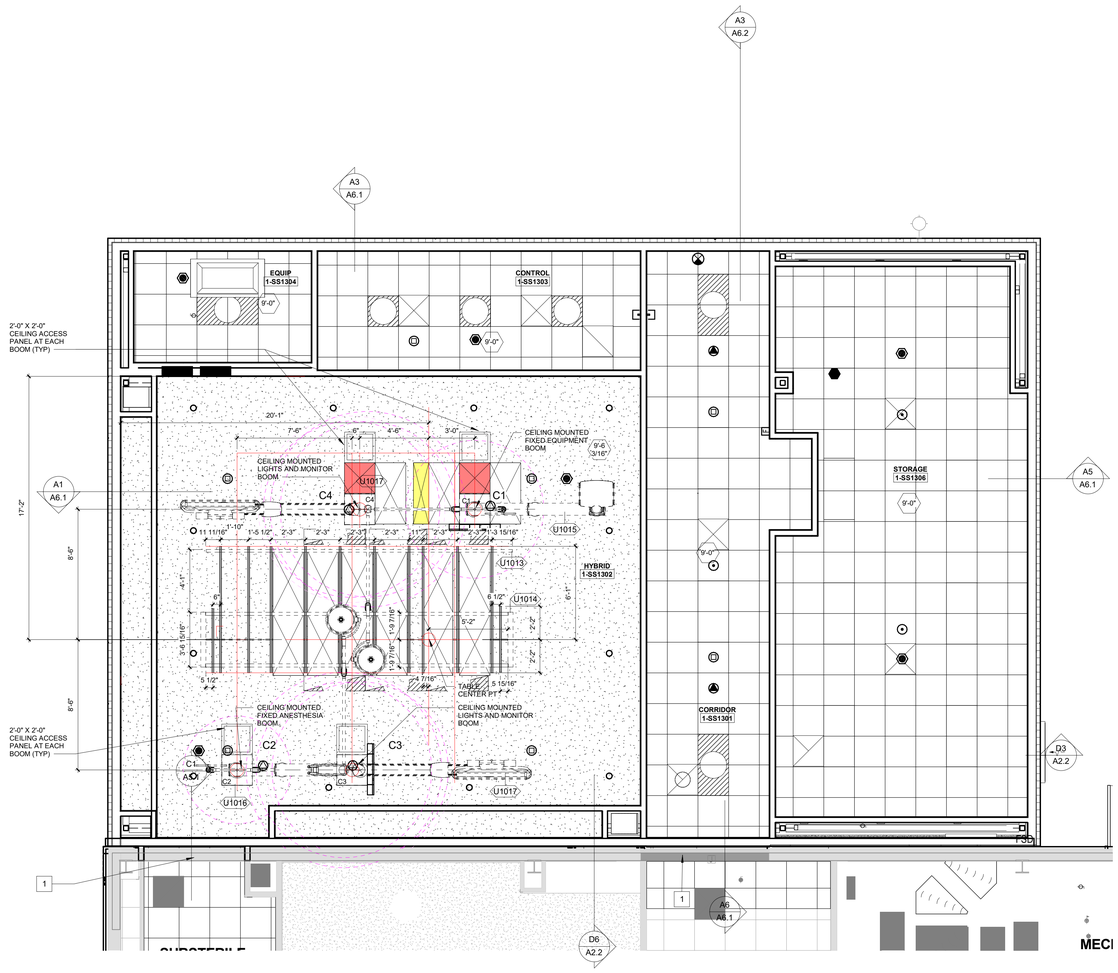

A1 REFLECTED CEILING PLAN
1/4" = 1'-0"

NORTH

STATE OF MISSOURI
Victor L. Mosby
Number
A-6471
REGISTERED ARCHITECT
3-23-2020

Victor L. Mosby, Architect
License - Missouri #A-6471

ACI BOLAND ARCHITECTS
1710 Wyandotte
Kansas City, MO 64108
T: 816.763.9600

ACI/Boland, Inc.
Kansas City | St. Louis
Licensee's Certificate of Authority Number:

STRUCTURAL, MECHANICAL, ELECTRICAL, & PLUMBING CONSULTANT

Professional Engineering Consultants, P.A.

623 Massachusetts Street, Suite 200
Lawrence, KS 66044

Licensee's Certificate of Authority Number:

Phone Number: 785.842.6464

Lee's Summit Medical Center

Hybrid OR Addition
2100 SE Blue Parkway
Lee's Summit, MO 64063

Date	3-23-2020
Job Number	3-19058
Drawn By	CL
Checked By	KC

Revision

Number	Date	Description

A3.1

© 2020 ACI/BOLAND, Inc

FIRST FLOOR REFLECTED CEILING PLAN

3/25/2020 4:19:19 PM

C:\Users\clauer\Documents\3-19058_LSMC Hybrid OR_Arch_clauerVTDN7.rvt

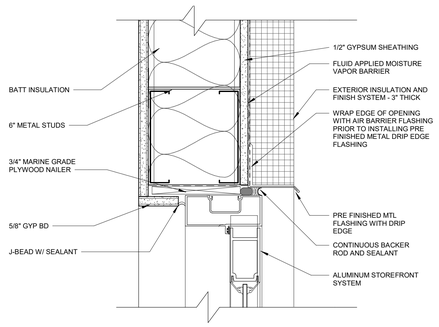

E6 HEAD DETAIL AT EIFS OPENING
3" = 1'-0"

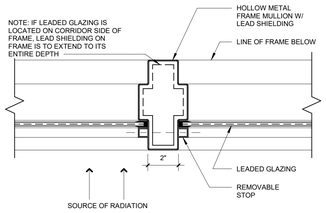

E4 JAMB - LEAD-LINED HOLLOW MTL. SIDELITE/BORROWED LITE FRAME AT MULLION
3" = 1'-0"

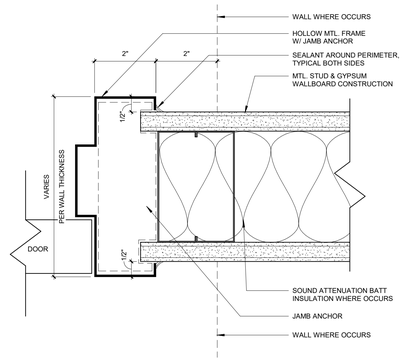

E3 TYPICAL HOLLOW METAL FRAME
6" = 1'-0"

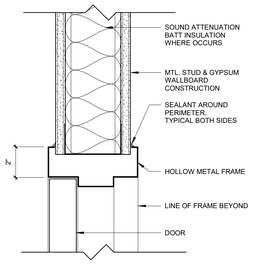

E2 TYPICAL HEAD- HOLLOW METAL DOOR FRAME
3" = 1'-0"

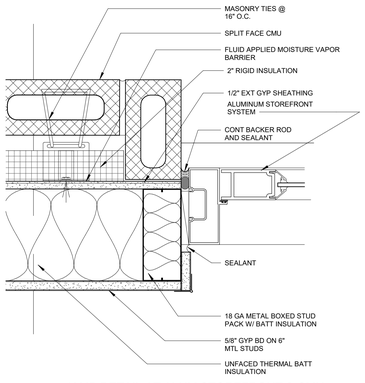

C6 JAMB DETAIL AT ALUM STOREFRONT & CMU
3" = 1'-0"

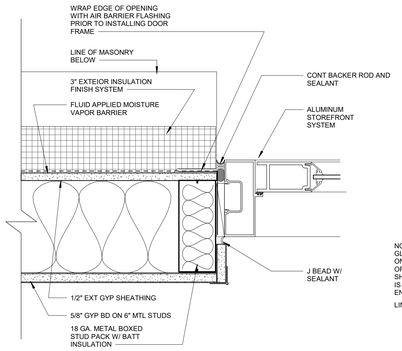

C5 JAMB DETAIL AT EIFS OPENING
3" = 1'-0"

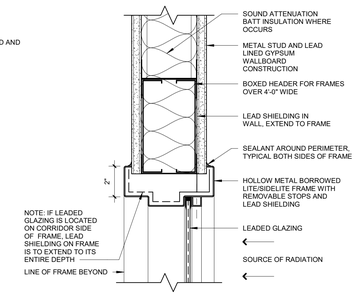

C4 HEAD - LEAD-LINED HOLLOW MTL. SIDELITE/BORROWED LITE FRAME
3" = 1'-0"

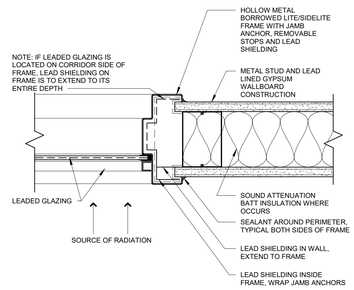

C3 JAMB - LEAD-LINED HOLLOW MTL. BORROWED LITE
3" = 1'-0"

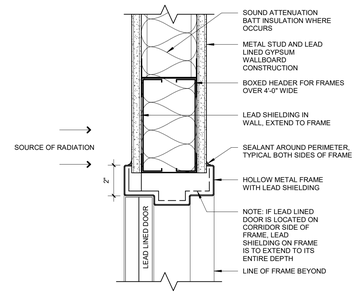

C2 HEAD - LEAD-LINED HOLLOW MTL. DOOR FRAME
3" = 1'-0"

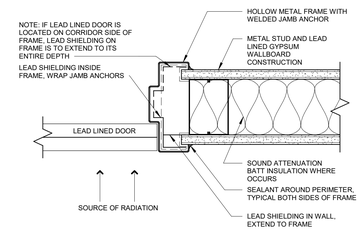

C1 JAMB - LEAD-LINED HOLLOW MTL. DOOR FRAME
3" = 1'-0"

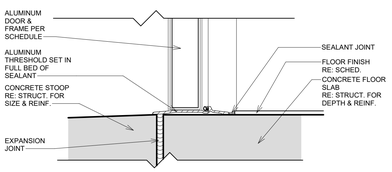

B6 ALUMINUM DOOR THRESHOLD
3" = 1'-0"

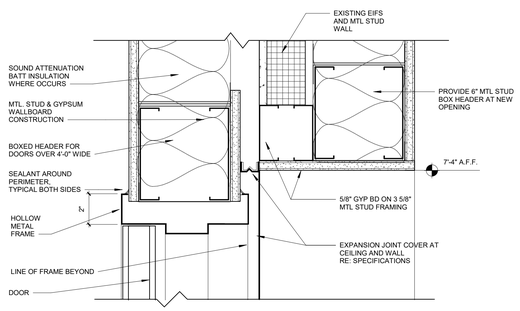

B3 TYPICAL HEAD- HOLLOW METAL PR DOORS
3" = 1'-0"

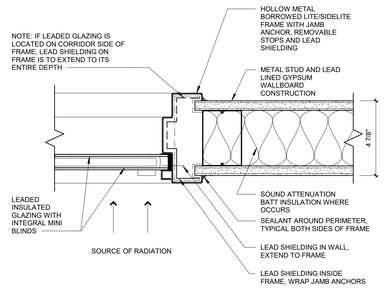

B2 JAMB - LEAD-LINED HOLLOW MTL. BL WTIH INTEGRAL BLINDS
3" = 1'-0"

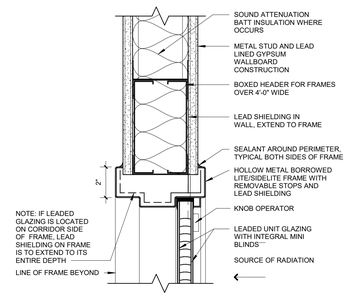

B1 HEAD - LEAD-LINED HOLLOW MTL BORROWED LITE FRAME-INTEGRAL BLINDS
3" = 1'-0"

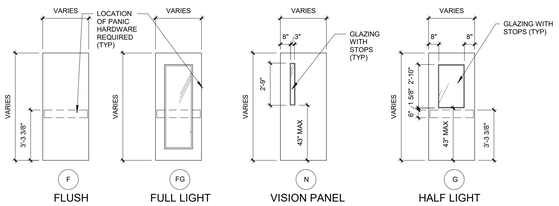

DOOR ELEVATIONS:

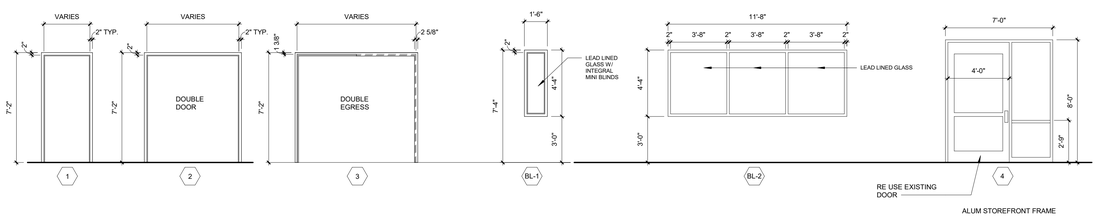

FRAME ELEVATIONS:

DOOR SCHEDULE

DOOR #	ROOM NAME	DOOR INFORMATION WIDTH	HEIGHT	NO. OF LEAVES	ELEV.	MATL.	FRAME INFORMATION ELEV.	MATL.	GLAZING	LABEL (MIN)	HARD WARE SET	OPENING DETAIL HEAD	JAMB	REMARKS	REVISION #
1301	CORRIDOR	3'-6"	7'-0"	2	N	WD	3	HM	GL-5	45 min	4	B3/A4.1	E3/A4.1	AUTO OPERATOR	
1301.1	CORRIDOR	4'-0"	7'-10"	1	FGN	ALUM	4	ALUM	GL-2	--	--	--	--	DETAILS E6, C5 & C6/A4.1. REUSE EXISTING DOOR AND HARDWARE NEW FRAME.	
1302	HYBRID	3'-0"	7'-0"	2	F	WD	2	HM	--	--	3	C2/A4.1	C1/A4.1	AUTO OPERATOR, LEADED DOOR & FRAME	
1303	CONTROL	3'-0"	7'-0"	1	F	WD	1	HM	--	--	2	E2/A4.1	E3/A4.1		
1303.1	CONTROL	3'-0"	7'-0"	1	F	WD	1	HM	--	--	5	E2/A4.1	E3/A4.1	LEADED DOOR & FRAME	
1304	EQUIP	3'-0"	7'-0"	1	F	WD	1	HM	--	--	2	E2/A4.1	E3/A4.1		
1306	STORAGE	3'-0"	7'-0"	2	F	WD	2	HM	--	45 min	1	B3/A4.1	E3/A4.1		
1307	HYBRID	3'-0"	7'-0"	1	F	WD	1	HM	--	45 min	6	E2/A4.1	E3/A4.1		
BL-1302.1	HYBRID	1'-6"	3'-0"				BL-1	HM	GL-4	--	--			LEADED FRAME/GLASS/INTEGRAL BLINDS	
BL-1302.2	CONTROL	11'-8"	4'-4"				BL-2	HM	GL-3	--		C4	E4	LEADED FRAME	

DOOR & FRAME MATERIAL LEGEND

ALUM	ALUMINUM
HM	HOLLOW METAL
WD	SOLID CORE WOOD
FRP	FIBER REINFORCED PANEL

GLAZING LEGEND

TYPE	DESCRIPTION
GL-1	FULLY TEMPERED GLASS
GL-2	INSULATING GLASS
GL-3	LEAD LINED GLASS
GL-4	LEAD LINED GLASS W/ INTEGRAL MINI BLINDS
GL-5	FIRE GLASS

STATE OF MISSOURI
Victor L. Mosby
Number
A-6471
REGISTERED ARCHITECT
3-23-2020
Victor L. Mosby Architect
License - Missouri #A-6471

ACI BOLAND ARCHITECTS
1710 Wyandotte
Kansas City, MO 64108
T: 816.763.9600

ACI/Boland, Inc.
Kansas City | St. Louis
Licensee's Certificate of Authority Number:

STRUCTURAL, MECHANICAL, ELECTRICAL, & PLUMBING CONSULTANT

Professional Engineering Consultants, P.A.

623 Massachusetts Street, Suite 200
Lawrence, KS 66044

Licensee's Certificate of Authority Number:

Phone Number: 785.842.6464

Lee's Summit Medical Center

Hybrid OR Addition
2100 SE Blue Parkway
Lee's Summit, MO 64063

Date	3-23-2020
Job Number	3-19058
Drawn By	CL
Checked By	KC

Revision

Number	Date	Description

A4.1

© 2020 ACI/BOLAND, Inc

DOOR AND FRAME SCHEDULE AND DETAILS

INTERIOR FINISH LEGEND

MARK	ITEM	MANUFACTURER	MODEL/ PATTERN	COLOR	SIZE	REMARKS
FLOOR						
RSF-1	RESILIENT SHEET FLOOR	SHANNON SPECIALTY FLOORS	ALTRO, SUPREMA	SUGAR SU2042	.8MM THICK	-
BASE						
IB-1	INTEGRAL BASE	SHANNON SPECIALTY FLOORS	ALTRO, SUPREMA	SUGAR SU2042	6"H BASE	-
WALL						
CG-1	CORNER GUARD	INPRO	130 CORNER GUARD	CHINO 0258	3", FULL HT	-
CG-2	CORNER GUARD	INPRO	150 CORNER GUARD	CHINO 0258	2", FULL HT	-
CG-3	CORNER GUARD	INPRO	STAINLESS STEEL	-	3 1/2", FULL HT.	-
CG-4	CORNER GUARD	INPRO	STAINLESS STEEL	-	2", FULL HT.	-
PT-1	PAINT	PITTSBURGH PAINTS	414-3	TOASTED ALMOND	-	OVERALL PAINT, EGGSHELL FINISH
PT-1A	PAINT	PITTSBURGH PAINTS	414-3	TOASTED ALMOND	-	OVERALL PAINT, EPOXY FINISH
PT-2	PAINT	BENJAMIN MOORE CLASSIC	1495	OCTOBER MIST	-	ACCENT PAINT, EGGSHELL FINISH
PT-3	PAINT	PITTSBURGH PAINTS	521-5	EIFFEL TOWER	-	DOOR FRAME PAINT, SEMI GLOSS FINISH
PT-4	PAINT	BENJAMIN MOORE	-	SUPER WHITE	-	CEILING PAINT, EPOXY FINISH
WG-1	WALL GUARD	INPRO	700	CHINO 0258	7 3/4" HT.	TOP WALL GUARD
WG-2	WALL GUARD	INPRO	1400	CHINO 0258	4" HT.	BOTTOM WALL GUARD
WP-1	WALL PROTECTION	INPRO	RIGID VINYL SHEET WALL PROTECTION	CHINO 0258	4" HT.	.040" THICK
CASEWORK						
PLAM-1	PLASTIC LAMINATE	WILSONART	7936-07	WILLIAMSBURG CHERRY	-	TO BE USED WITH WOODTAPE, 3796 MAHGANY EDGEBANDING
PLAM-2	PLASTIC LAMINATE	WILSONART	4869-60	WESTERN WHITE	-	TO BE USED WITH EDGEBANDING
SSF-1	SOLID SURFACE	WILSONART	9137RS (4)	BLANCO RIVERSTONE	-	MATTE FINISH.
CEILING						
ACT-1	ACOUSTIC CEILING TILE	ARMSTRONG	DUNE 1773	WHITE	24" X 24" X 5/8"	TO BE USED WITH WHITE 15/16" PRELUDE GRID
ACT-2	ACOUSTIC CEILING TILE	ARMSTRONG	CLEAN ROOM VL 868	WHITE	24" X 24" X 5/8"	TO BE USED WITH WHITE 15/16" PRELUDE GRID

ROOM FINISH SCHEDULE

ROOM NUMBER	ROOM NAME	FLOOR FINISH	BASE FINISH	WALLS				CASEWORK			CEILING	NOTES
				NORTH	EAST	SOUTH	WEST	BASE CABINETS	UPPER CABINETS	COUNTER TOPS		
1-SS1301	CORRIDOR	RSF-1	IB-1	PT-1 / WP-1 / WG-1,2	PT-1 / WP-1 / WG-1,2	PT-1 / WP-1 / WG-1,2	PT-1 / WP-1 / WG-1,2	-	-	-	ACT-2	
1-SS1302	HYBRID	RSF-1	IB-1	PT-1A / WP-1	PT-1A / WP-1	PT-1A / WP-1	PT-1A / WP-1	PLAM-1	PLAM-1	SSF-1	PT-4	
1-SS1303	CONTROL	RSF-1	IB-1	PT-1	PT-1	PT-1	PT-1	-	-	PLAM-2	ACT-1	
1-SS1304	EQUIP	RSF-1	IB-1	PT-1	PT-1	PT-1	PT-1	-	-	-	ACT-1	
1-SS1306	STORAGE	RSF-1	IB-1	PT-1 / WP-1	PT-1 / WP-1	PT-1 / WP-1	PT-1 / WP-1	-	-	-	ACT-1	
1-SS1307	SUB STERILE	RSF-1	IB-1	PT-1A / WP-1	PT-1A/WP-1	PT-1A/WP-1	PT-1A/WP-1	-	-	-	ACT-2	

GENERAL ROOM FINISH SCHEDULE NOTES

B	ALL SOLID WOOD, WOOD VENEER, AND PLASTIC LAMINATE GRAIN SHALL BE VERTICALLY ORIENTED UNLESS OTHERWISE NOTED
C	DOOR FRAMES, HOLLOW METAL WINDOW FRAMES TO BE PT-3 UNLESS OTHERWISE NOTED
D	ALL FACES AND UNDERSIDES OF SOFFITS AND HEADERS TO BE PT-1 UNLESS OTHERWISE NOTED
E	WALL EXPANSION JOINTS TO BE PT-1 UNLESS OTHERWISE NOTED
F	ALL ELECTRICAL PANELS AND METAL GRILLES SHALL BE PTD TO MATCH ADJACENT WALL SURFACE UNLESS OTHERWISE NOTED
G	ALL COLUMN SURROUND FINISHES TO MATCH ADJACENT WALL SURFACE UNLESS OTHERWISE NOTED
H	WHERE A WALL IS INDICATED TO HAVE PARTIAL OR FULL HT WALL PROTECTION, THE ENTIRE WALL IS TO BE PTD PRIOR TO WALL PROTECTION INSTALLATION
I	EXTEND ALL FINISHES BENEATH, BEHIND, AROUND ALL CASEWORK, EQUIPMENT, SIGNAGE, ETC

STATE OF MISSOURI
Victor L. Mosby
Number
A-6471
REGISTERED ARCHITECT

3-23-2020

Victor L. Mosby, Architect
License - Missouri #A-6471

ACI BOLAND ARCHITECTS
1710 Wyandotte
Kansas City, MO 64108
T: 816.763.9600

ACI/Boland, Inc.
Kansas City | St. Louis
Licensee's Certificate of Authority Number:

STRUCTURAL, MECHANICAL, ELECTRICAL, & PLUMBING CONSULTANT

Professional Engineering Consultants, P.A.

623 Massachusetts Street, Suite 200
Lawrence, KS 66044

Licensee's Certificate of Authority Number:

Phone Number: 785.842.6464

Lee's Summit Medical Center

Hybrid OR Addition
2100 SE Blue Parkway
Lee's Summit, MO 64063

Date	3-23-2020
Job Number	3-19058
Drawn By	BR
Checked By	KC

Revision

Number	Date	Description

A4.2

© 2020 ACI/BOLAND, Inc

ROOM FINISH SCHEDULE & FINISH LEGEND

3/25/2020 4:19:23 PM
C:\Users\clauer\Documents\3-19058_LSMC Hybrid OR_Arch_clauerVTDN7.rvt

3/25/2020 4:19:28 PM

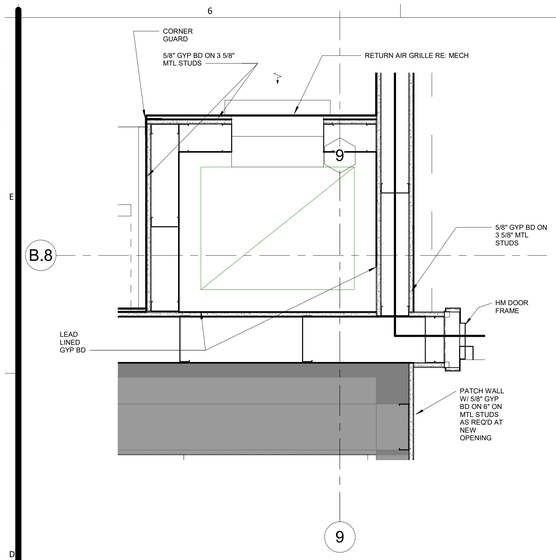

E6 PLAN DETAIL AT CORNER WALL
1 1/2" = 1'-0"

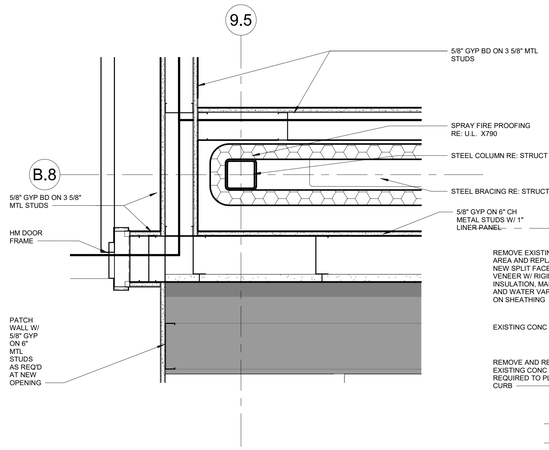

E5 01 - PLAN DETAIL AT CONNECTING DOOR
1 1/2" = 1'-0"

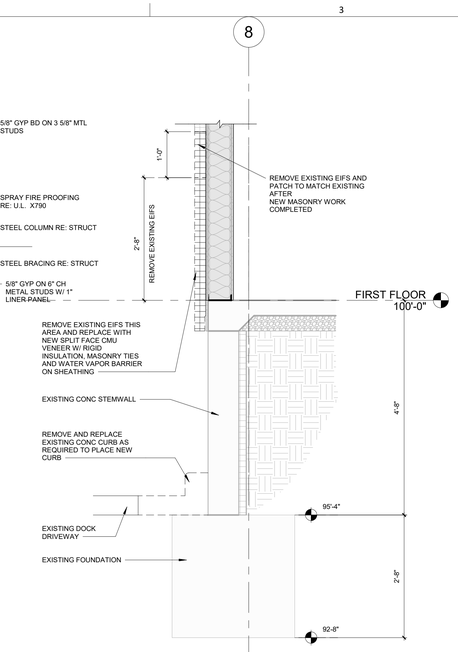

D3 DEMOLITION AT EXISTING WALL
3/4" = 1'-0"

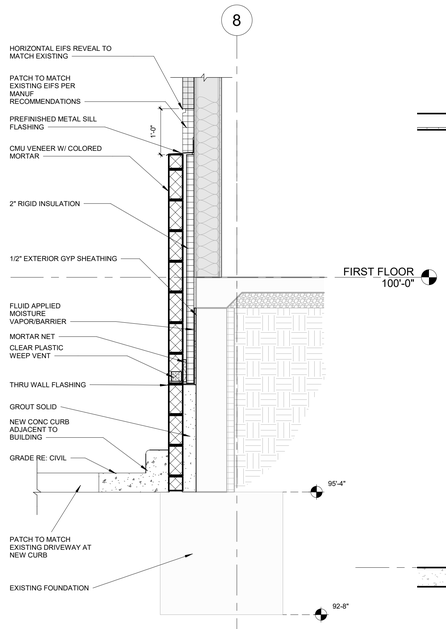

D2 WALL SECTION AT EXISTING WEST WALL- DOCK AREA
3/4" = 1'-0"

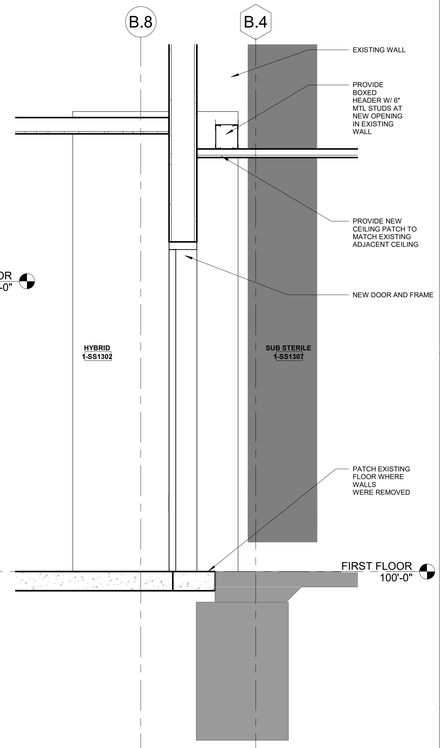

C1 WALL SECITON AT SUB STERILE
3/4" = 1'-0"

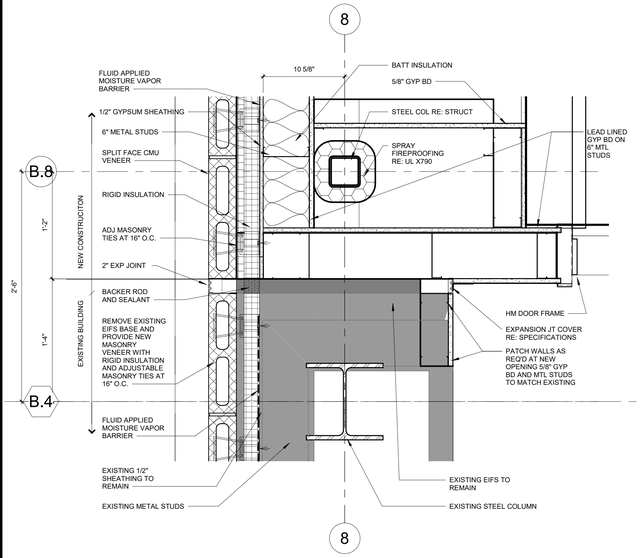

C6 PLAN DETAIL AT NEW BRICK/EXISTING EIFS
1 1/2" = 1'-0"

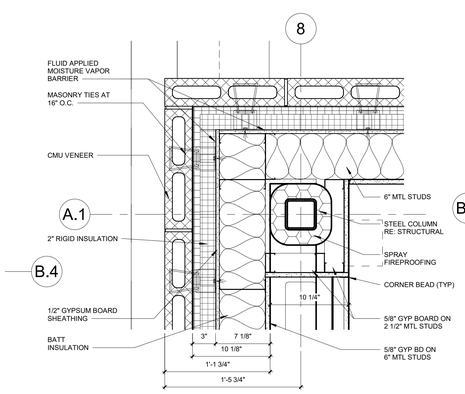

C4 01 - PLAN DETAIL AT BRICK CORNER
1 1/2" = 1'-0"

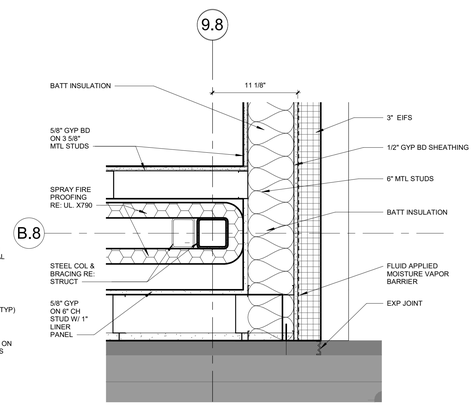

C3 PLAN DETAIL AT BRICK/EIFS INSIDE CORNER
1 1/2" = 1'-0"

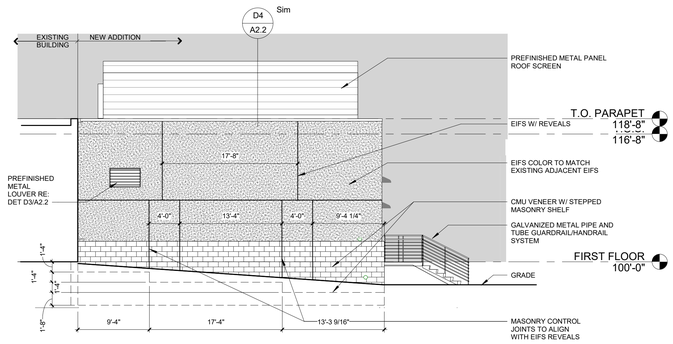

B2 East Elevation
1/8" = 1'-0"

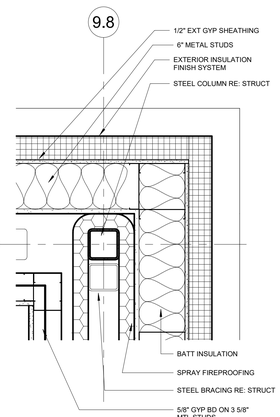

A6 01 - PLAN DETAIL AT EIFS CORNER
1 1/2" = 1'-0"

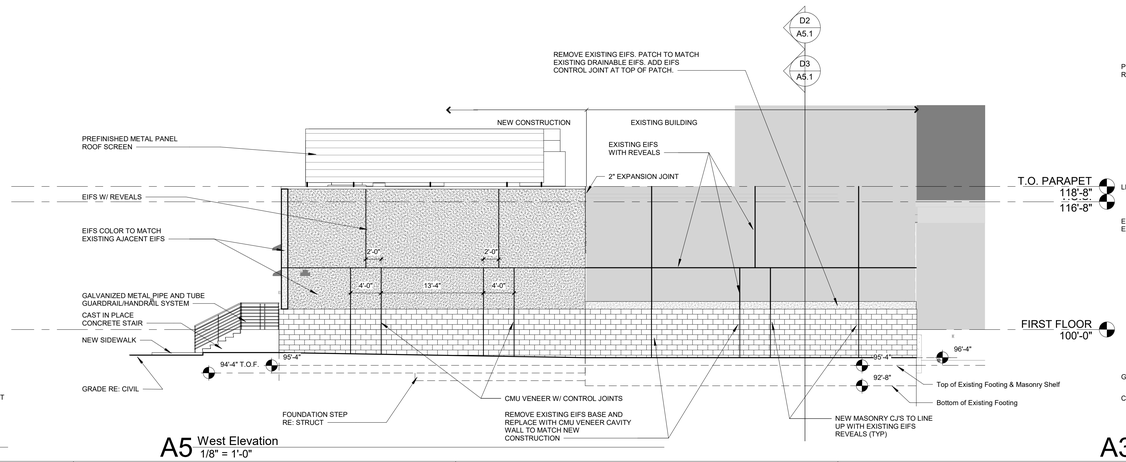

A5 West Elevation
1/8" = 1'-0"

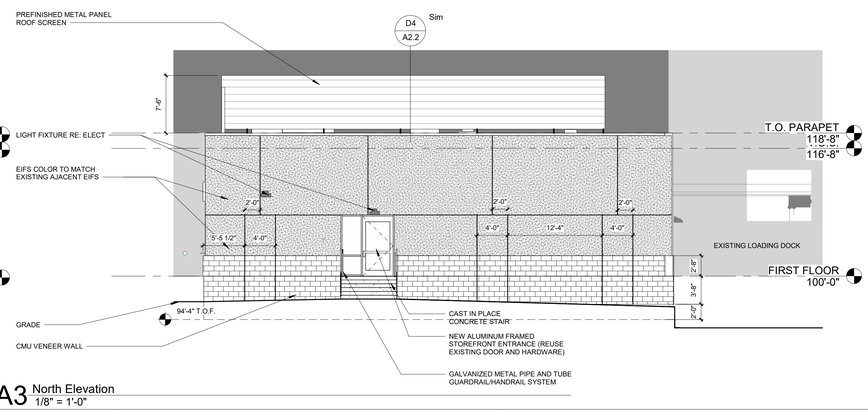

A3 North Elevation
1/8" = 1'-0"

C:\Users\clauer\Documents\3-19058_LSMC Hybrid OR_Arch_clauer\VTDN7.rvt

STATE OF MISSOURI
Victor L. Mosby
Number
A-6471
REGISTERED ARCHITECT
3-23-2020

Victor L. Mosby Architect
License - Missouri #A-6471

ACI BOLAND ARCHITECTS

1710 Wyandotte
Kansas City, MO 64108
T: 816.763.9600

ACI/Boland, Inc.
Kansas City | St. Louis
Licensee's Certificate of Authority Number:

STRUCTURAL, MECHANICAL, ELECTRICAL, & PLUMBING CONSULTANT

Professional Engineering Consultants, P.A.

623 Massachusetts Street, Suite 200
Lawrence, KS 66044

Licensee's Certificate of Authority Number:

Phone Number: 785.842.6464

Lee's Summit Medical Center

Hybrid OR Addition
2100 SE Blue Parkway
Lee's Summit, MO 64063

Date	3-23-2020
Job Number	3-19058
Drawn By	CL
Checked By	KC

Revision

Number	Date	Description

A5.1

© 2020 ACI/BOLAND, Inc

EXTERIOR ELEVATIONS

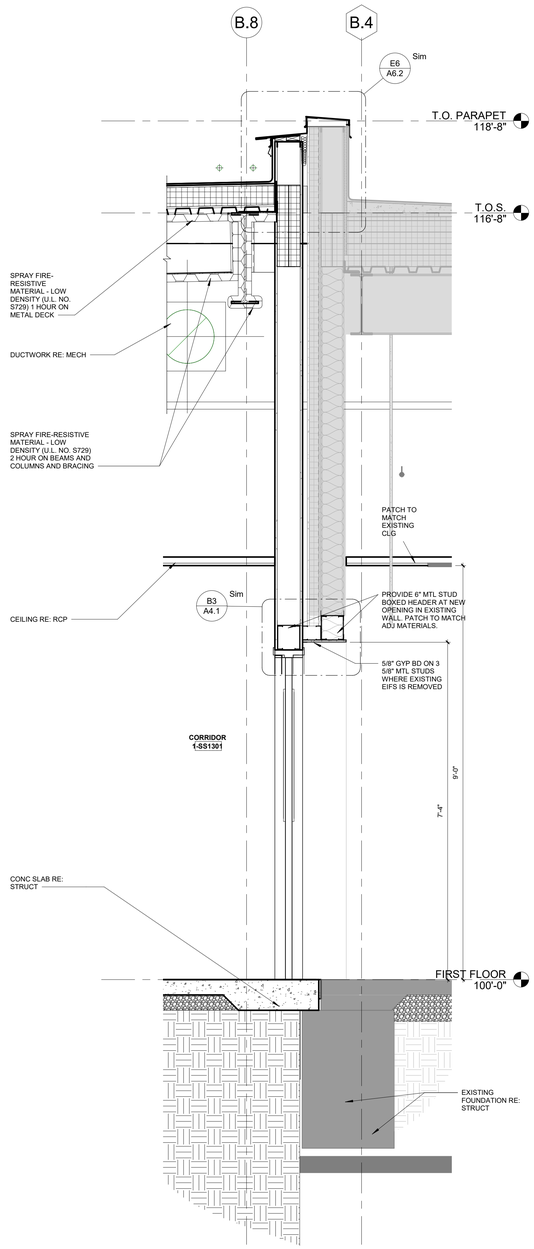

A6 WALL SECTION AT EXISTING
3/4" = 1'-0"

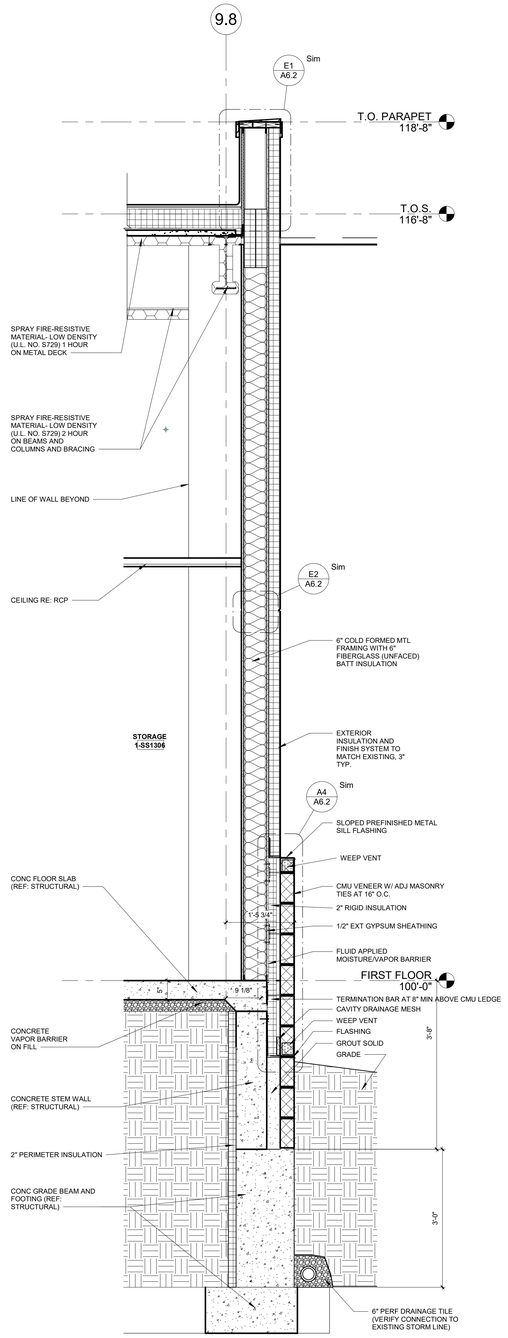

A5 WALL SECTION AT - EAST
3/4" = 1'-0"

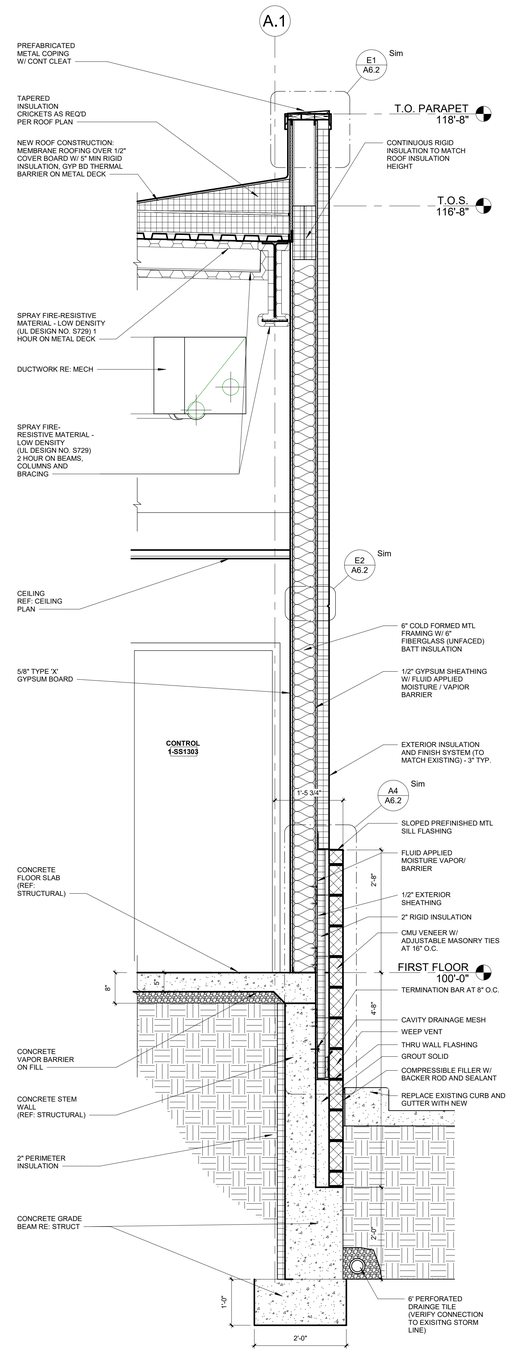

A3 WALL SECTION - NORTH
3/4" = 1'-0"

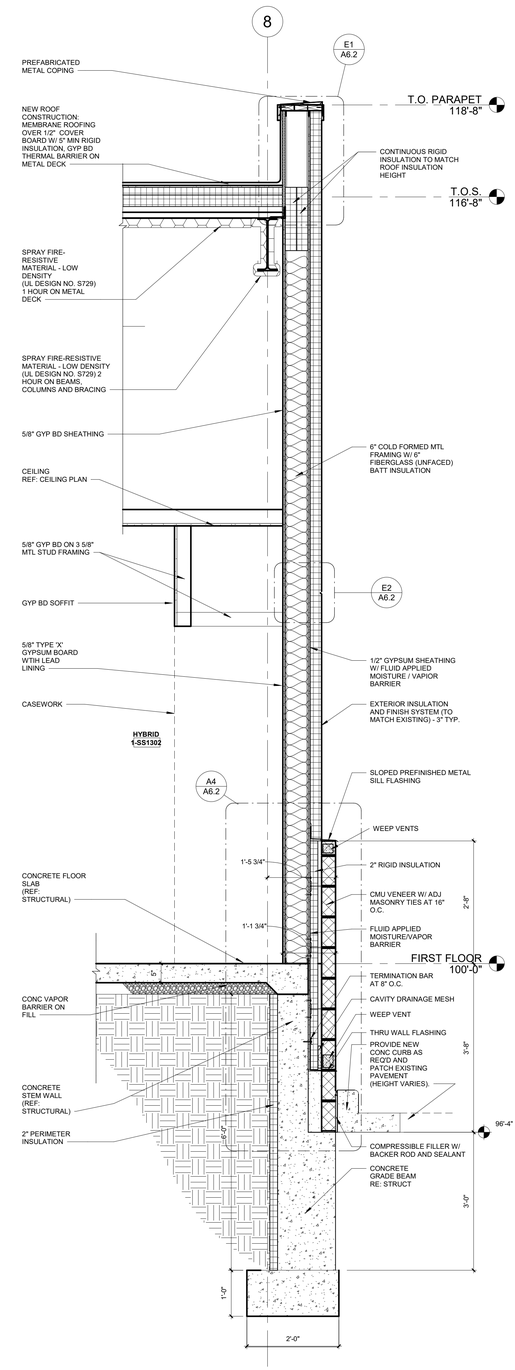

A1 WALL SECTION - WEST AT DOCK
3/4" = 1'-0"

3/25/2020 4:19:31 PM

C:\Users\clauer\Documents\3-19058_LSMC Hybrid OR_Arch_clauerVTDN7.rvt

STATE OF MISSOURI
Victor L. Mosby
Number
A-6471
REGISTERED ARCHITECT
3-23-2020
Victor L. Mosby Architect
License - Missouri #A-6471

ACI
BOLAND
ARCHITECTS
1710 Wyandotte
Kansas City, MO 64108
T: 816.763.9600

ACI/Boland, Inc.
Kansas City | St. Louis
Licensee's Certificate of Authority Number:

STRUCTURAL, MECHANICAL, ELECTRICAL, & PLUMBING CONSULTANT

Professional Engineering Consultants, P.A.

623 Massachusetts Street, Suite 200
Lawrence, KS 66044

Licensee's Certificate of Authority Number:

Phone Number: 785.842.6464

Lee's Summit Medical Center

Hybrid OR Addition
2100 SE Blue Parkway
Lee's Summit, MO 64063

Date	3-23-2020
Job Number	3-19058
Drawn By	Author
Checked By	Checker

Revision

Number	Date	Description

A6.1

© 2020 ACI/BOLAND, Inc

WALL SECTIONS

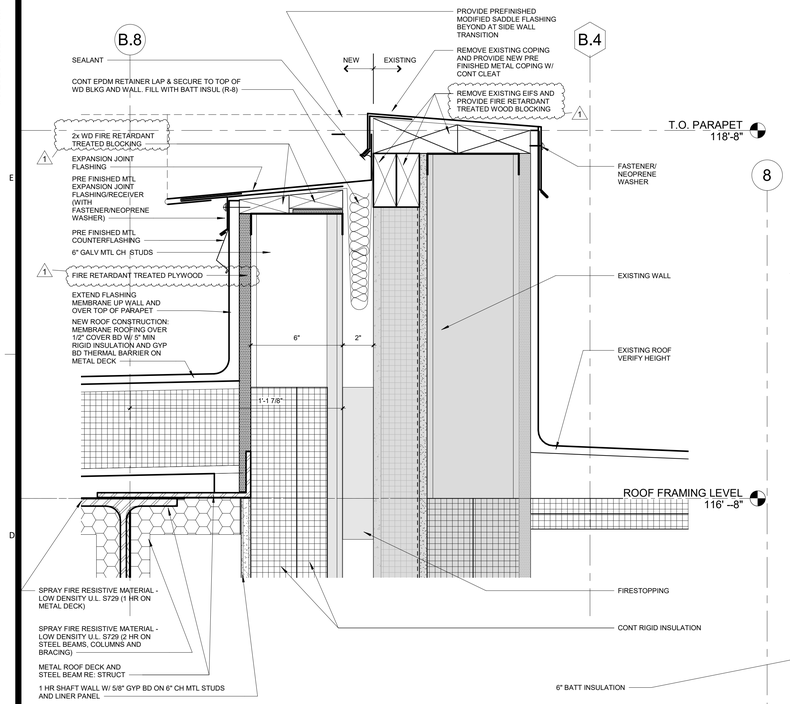

E6 DETAIL AT EXISTING TO NEW PARAPET
3" = 1'-0"

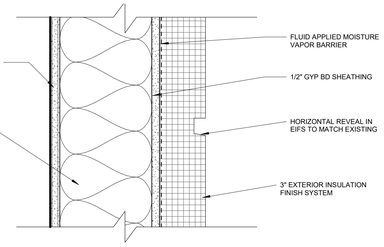

E2 SECTION AT EIFS HORIZONTAL JOINT
3" = 1'-0"

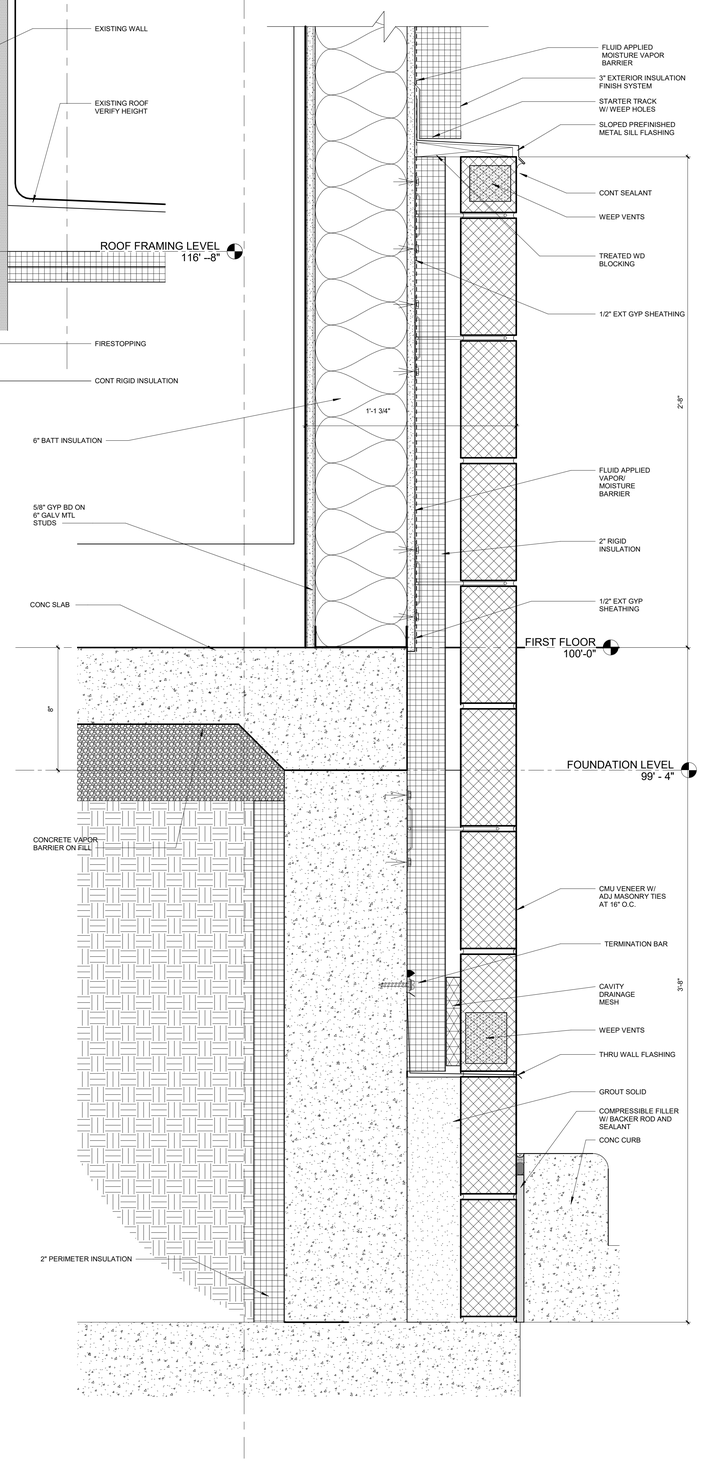

A4 DETAIL AT EIFS
3" = 1'-0"

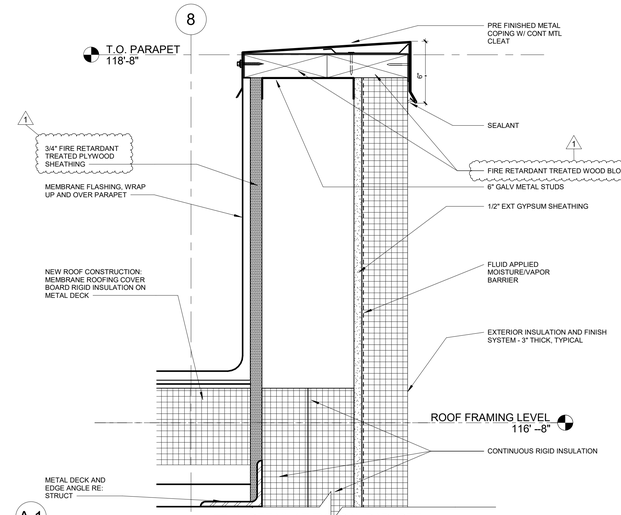

E1 DETAIL AT TYPICAL PARAPET
3" = 1'-0"

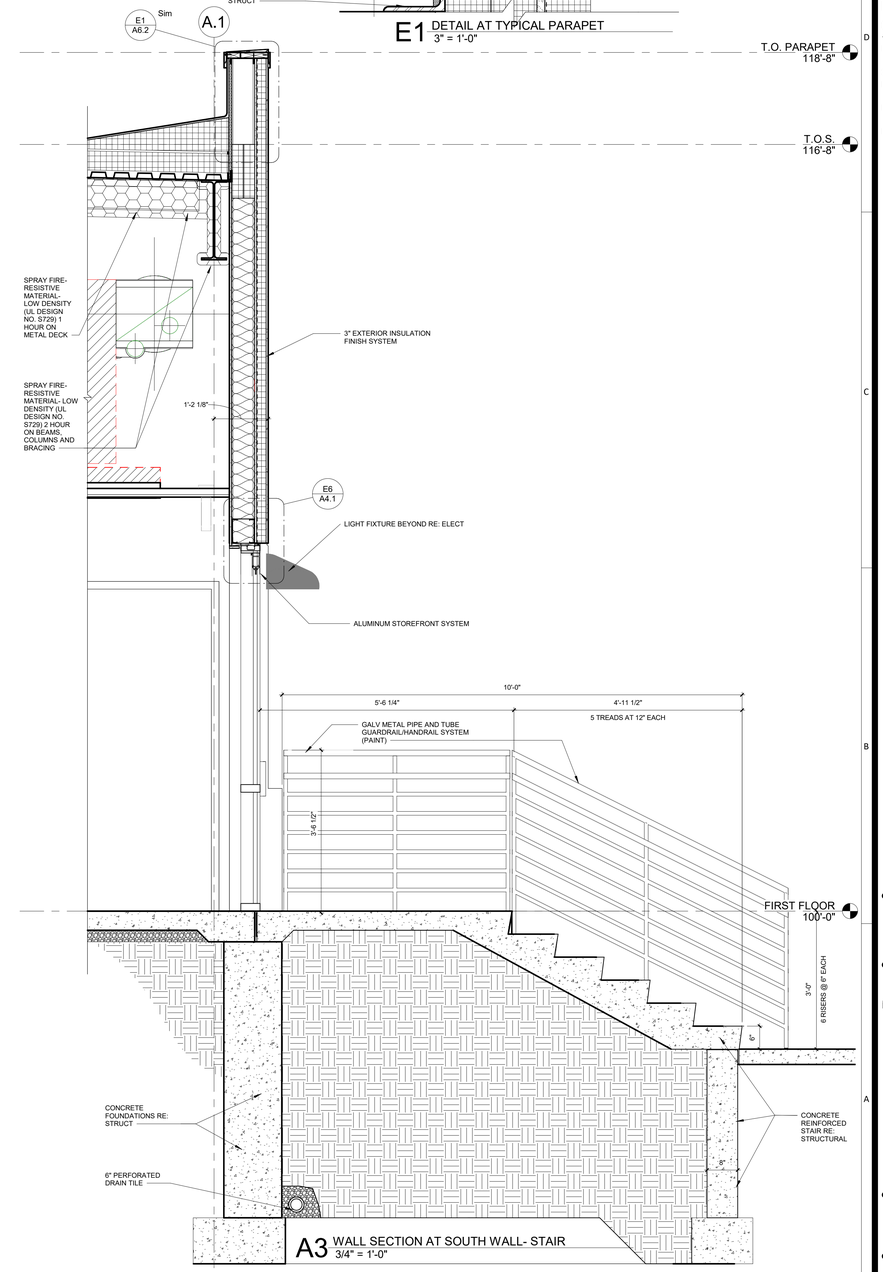

A3 WALL SECTION AT SOUTH WALL- STAIR
3/4" = 1'-0"

STATE OF MISSOURI
Victor L. Mosby
Number A-6471
REGISTERED ARCHITECT
3-23-2020
Victor L. Mosby Architect
License - Missouri #A-6471

ACI BOLAND ARCHITECTS
1710 Wyandotte
Kansas City, MO 64108
T: 816.763.9600

ACI/Boland, Inc.
Kansas City | St. Louis
Licensee's Certificate of Authority Number:

STRUCTURAL, MECHANICAL, ELECTRICAL, & PLUMBING CONSULTANT

Professional Engineering Consultants, P.A.

623 Massachusetts Street, Suite 200
Lawrence, KS 66044

Licensee's Certificate of Authority Number:

Phone Number: 785.842.6464

Lee's Summit Medical Center

Hybrid OR Addition
2100 SE Blue Parkway
Lee's Summit, MO 64063

Date	3-23-2020
Job Number	3-19058
Drawn By	CL
Checked By	KC

Revision

Number	Date	Description
1	4/6/2020	Permit Comments

A6.2

© 2020 ACI/BOLAND, Inc

WALL SECTIONS

4/6/2020 8:02:15 AM
C:\Users\kcrane\Documents\3-19058_LSMC Hybrid OR_Arch_kcrane.rvt

3/25/2020 4:19:36 PM

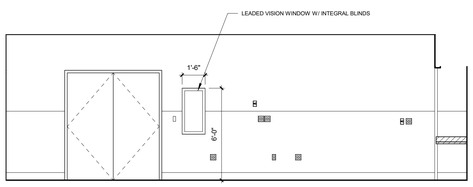

A6 HYBRID OR - EAST
1/4" = 1'-0"

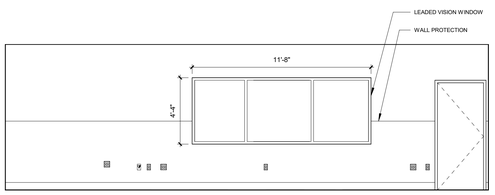

A5 HYBRID OR - NORTH
1/4" = 1'-0"

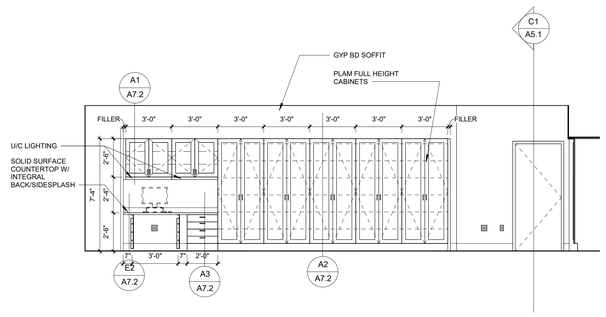

A3 HYBRID OR - SOUTH
1/4" = 1'-0"

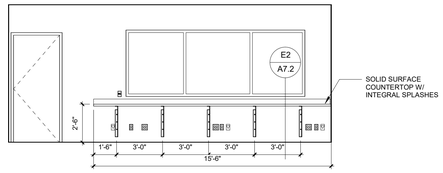

B1 CONTROL ROOM - SOUTH
1/4" = 1'-0"

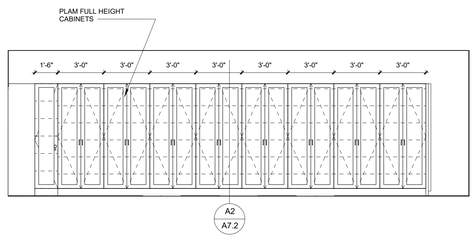

A1 HYBRID OR - WEST
1/4" = 1'-0"

C:\Users\clauer\Documents\3-19058_LSMC Hybrid OR_Arch_clauerVTDN7.rvt

STATE OF MISSOURI
Victor L. Mosby
Number
A-6471
REGISTERED ARCHITECT

3-23-2020

Victor L. Mosby Architect
License - Missouri #A-6471

ACI BOLAND ARCHITECTS

1710 Wyandotte
Kansas City, MO 64108
T: 816.763.9600

ACI/Boland, Inc.
Kansas City | St. Louis
Licensee's Certificate of Authority Number:

STRUCTURAL, MECHANICAL, ELECTRICAL, & PLUMBING CONSULTANT

Professional Engineering Consultants, P.A.

623 Massachusetts Street, Suite 200
Lawrence, KS 66044

Licensee's Certificate of Authority Number:

Phone Number: 785.842.6464

Lee's Summit Medical Center

Hybrid OR Addition
2100 SE Blue Parkway
Lee's Summit, MO 64063

Date	3-23-2020
Job Number	3-19058
Drawn By	Author
Checked By	Checker

Revision

Number	Date	Description

A7.1

© 2020 ACI/BOLAND, Inc

INTERIOR ELEVATIONS

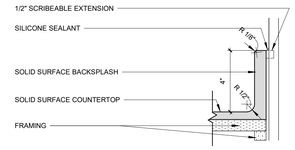

E3 SECTION DETAIL AT SOLID SURFACE BACKSPLASH
3" = 1'-0"

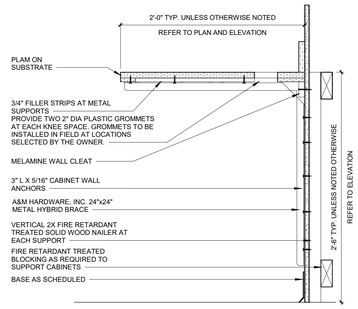

E2 SECTION DETAIL AT SUPPORT BRACKET / KNEE SPACE
1 1/2" = 1'-0"

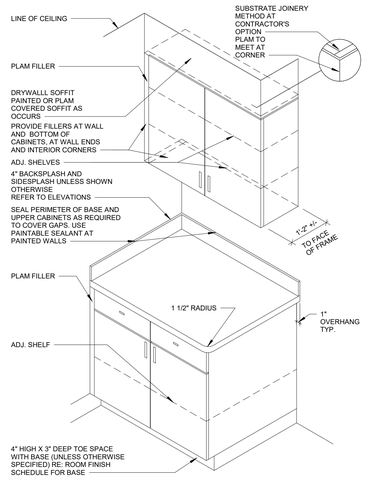

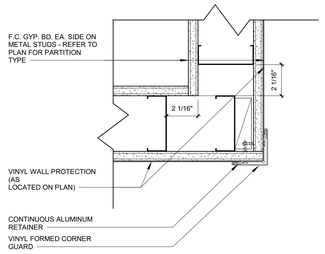

D3 TYPICAL SINGLE VINYL CORNER GUARD
3" = 1'-0"

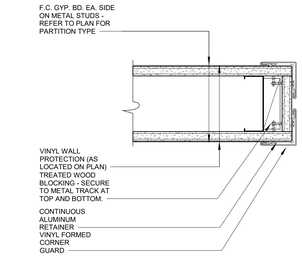

D2 TYPICAL DOUBLE VINYL CORNER GUARD
3" = 1'-0"

TYP. CABINET NOTES:

1. PROVIDE PLAM FILLER WHERE CABINETS BUTT UP TO WALLS.

2. ALL COUNTERTOPS HAVE A 4" BACKSPLASH (MATERIAL TO MATCH COUNTERTOP) AND OUTSIDE CORNERS HAVE 1 1/2" RADIUS EXCEPT WHERE NOTED OTHERWISE.

3. CASEWORK MFR. TO SUPPLY (2) - 2" (GROMMETS PER KNEESPACE. GROMMETS TO BE INSTALLED IN FIELD AS DIRECTED BY OWNER. COLOR TO BE SELECTED BY ARCHITECT.

4. PLASTIC LAMINATE COUNTERTOP EDGES SHALL BE 3 MM PLASTIC. COLOR AS SELECTED BY ARCHITECT)

D1 CASEWORK ISOMETRIC
1 1/2" = 1'-0"

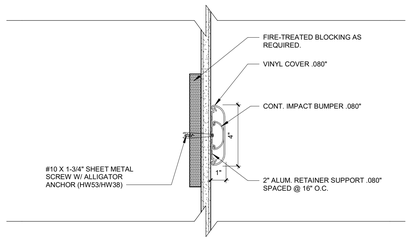

B5 TYPICAL WALL GUARD - B
3" = 1'-0"

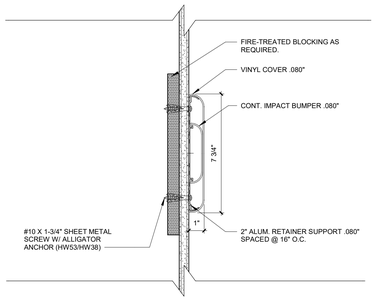

B3 TYPICAL WALL GUARD - A
3" = 1'-0"

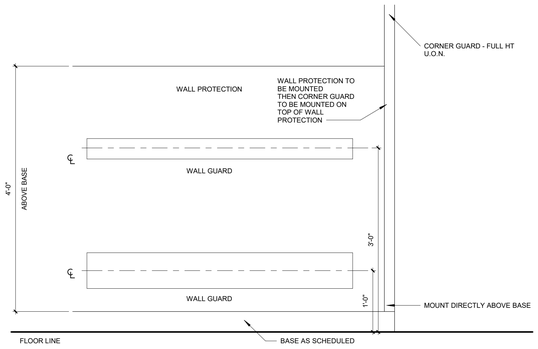

A5 TYPICAL ELEVATION OF WALL PROTECTION/CORNER GUARD
1" = 1'-0"

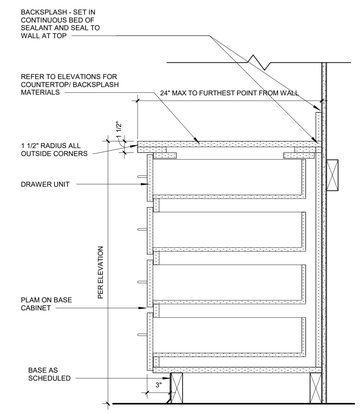

A3 SECTION DETAIL@ 4 DRAWER
1 1/2" = 1'-0"

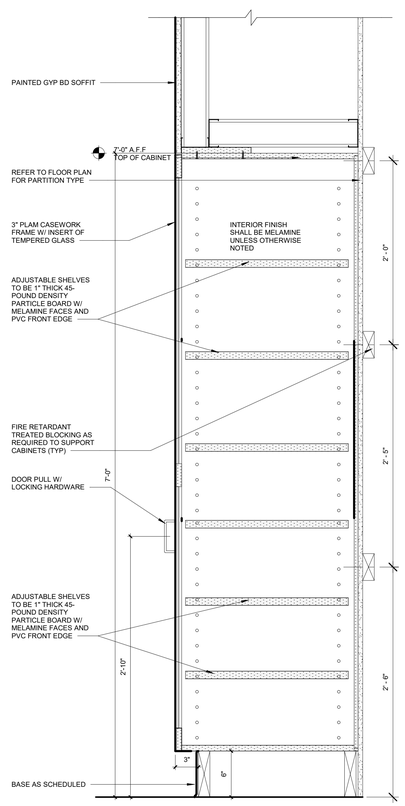

A2 HYBRID O.R. FULL HEIGHT STORAGE CABINET
1 1/2" = 1'-0"

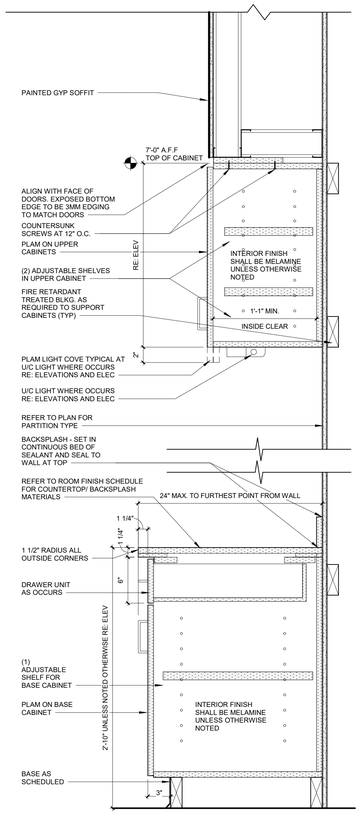

A1 CASEWORK SECTION
1 1/2" = 1'-0"

STATE OF MISSOURI
Victor L. Mosby
Number
A-6471
REGISTERED ARCHITECT
3-23-2020
Victor L. Mosby Architect
License - Missouri #A-6471

ACI
BOLAND
ARCHITECTS
1710 Wyandotte
Kansas City, MO 64108
T: 816.763.9600

ACI/Boland, Inc.
Kansas City | St. Louis
Licensee's Certificate of Authority Number:

STRUCTURAL, MECHANICAL, ELECTRICAL, & PLUMBING CONSULTANT

Professional Engineering Consultants, P.A.

623 Massachusetts Street, Suite 200
Lawrence, KS 66044

Licensee's Certificate of Authority Number:

Phone Number: 785.842.6464

Lee's Summit Medical Center

Hybrid OR Addition
2100 SE Blue Parkway
Lee's Summit, MO 64063

Date	3-23-2020
Job Number	3-19058
Drawn By	Author
Checked By	Checker

Revision

Number	Date	Description

A7.2

© 2020 ACI/BOLAND, Inc

INTERIOR DETAILS

3/25/2020 4:19:38 PM
C:\Users\clauer\Documents\3-19058_LSMC Hybrid OR_Arch_clauerVTDN7.rvt

4/6/2020 8:34:22 AM

DESIGN CRITERIA

1. BUILDING CODE:
INTERNATIONAL BUILDING CODE (IBC), 2018 EDITION, INCLUDING LOCAL SUPPLEMENTS. THE STRUCTURE IS CLASSIFIED AS A CATEGORY III FACILITY.

2. DEAD AND LIVE LOADS:

LOCATION	UNIFORM LIVE LOAD	CONCENTRATED LIVE LOAD	TOTAL DEAD LOAD*
ROOF	20 PSF	-----------	20 PSF
SLAB ON GRADE	100 PSF	2000 LB	----------

ROOF LIVE LOADS ON SUPPORTING ELEMENTS SHALL NOT BE REDUCED.
* TOTAL DEAD LOAD INCLUDES WEIGHT OF STRUCTURAL ELEMENTS.

3. SNOW LOADS:

GROUND SNOW LOAD:	20 PSF
FLAT ROOF SNOW LOAD:	15 PSF
SNOW EXPOSURE FACTOR:	1.0
SNOW IMPORTANCE FACTOR:	1.1
THERMAL FACTOR:	1.0
UNIFORM DESIGN SNOW LOAD:	22 PSF

1

DRIFTING OF SNOW AND UNBALANCED SNOW SHALL BE IN ACCORDANCE WITH CODE.

4. WIND:

ULTIMATE DESIGN WIND SPEED, V_{ult}:	120 MPH (3 SECOND GUST)
NOMINAL DESIGN WIND SPEED, V_{asd}:	90 MPH (3 SECOND GUST)
WIND EXPOSURE:	C
INTERNAL PRESSURE COEF:	±0.18

COMPONENTS AND CLADDING PRESSURE SHALL BE USED FOR DESIGN OF EXTERIOR WALLS, WINDOWS, DOORS, AND MISCELLANEOUS MATERIALS NOT SPECIFICALLY SHOWN ON THE PLANS.

5. SEISMIC:

SITE CLASS:	D
SEISMIC DESIGN CATEGORY:	B
SEISMIC IMPORTANCE FACTOR:	1.5
Ss:	0.101
S1:	0.069
Sds:	0.108
Sd1:	0.110
LATERAL SYSTEM:	STEEL SYSTEMS NOT SPECIFICALLY DESIGNED FOR SEISMIC RESISTANCE (R=3)
METHOD OF ANALYSIS:	EQUIVALENT LATERAL FORCE
Cs:	0.0538
BASE SHEAR:	10.18 KIPS (ULTIMATE)

6. SAFE ROOM/STORM SHELTER LOADING:

NO AREA WITHIN THIS BUILDING HAS BEEN DESIGNED TO MEET THE REQUIREMENTS OF FEMA P-361 OR ICC/NSSA-500. THE ARCHITECT MAY DESIGNATE AN AREA THAT, IN HIS/HER OPINION, HAS ENHANCED PROTECTION OVER THE REMAINDER OF THE BUILDING AS A PLACE OF REFUGE FROM HIGH WINDS. HOWEVER, IT SHOULD NOT BE CONSIDERED A SAFE ROOM/STORM SHELTER.

CONSTRUCTION DETAILS FOR STRUCTURAL MOVEMENT

1. IT IS THE CONTRACTOR'S RESPONSIBILITY TO PROVIDE ACCOMMODATIONS IN GLAZING, ARCHITECTURAL FINISHES, PLUMBING, HVAC AND ELECTRICAL ELEMENTS TO PREVENT DAMAGE DUE TO DEFLECTION OF ROOF, WALL AND FLOOR MEMBERS.

2. VERTICAL DEFLECTIONS DUE TO GRAVITY LOADS:

WIDE FLANGE ROOF BEAMS & GIRDERS — LENGTH IN INCHES/240 (TOTAL LOAD)
LENGTH IN INCHES/360 (LIVE ONLY)

3. HORIZONTAL DEFLECTIONS DUE TO WIND (W) OR SEISMIC (E):

CONVENTIONAL BUILDING (FLOOR TO ROOF) — HEIGHT IN INCHES/360(W), 200 (E)

DELEGATED ENGINEERING OF STRUCTURAL COMPONENTS AND SYSTEMS

1. ALL STRUCTURAL COMPONENTS AND SYSTEMS SPECIFIED TO BE DELEGATED SHALL BE DESIGNED AND SEALED BY A SPECIALTY STRUCTURAL ENGINEER (SSE) AND SHALL MEET THE GUIDELINES PUBLISHED BY THE COUNCIL OF AMERICAN STRUCTURAL ENGINEERS (CASE) FOR DELEGATED SPECIALTY STRUCTURAL ENGINEERING.

2. REFERENCE THE GENERAL NOTES & DRAWINGS FOR BUILDING CODE, SERVICE CRITERIA, AND DESIGN LOADS.

3. SUBMITTALS FOR DELEGATED COMPONENETS AND SYSTEMS SHALL INCLUDE THE FOLLOWING:

   A. A FULL DESIGN ANALYSIS, INCLUDING CALCULATIONS FOR GRAVITY AND LATERAL LOADS, WITH A SEALED COVER SHEET IDENTIFYING THE PROJECT NAME AND ADDRESS.

   B. THE SSE THAT SEALED THE CALCULATIONS SHALL ALSO SEAL THE FABRICATION, PLACING, AND ERECTION PLANS. EACH PLAN SHALL IDENTIFY THE PROJECT NAME AND ADDRESS.

   C. IF THE SSE THAT SEALED THE CALCULATIONS AND PLANS IS AN EMPLOYEE OF A COMPANY, THE COMPANY'S CERTIFICATE OF AUTHORIZATION NUMBER SHALL BE INCLUDED ON THE SUBMITTALS. BOTH THE SSE SEAL AND THE CERTIFICATE OF AUTHORIZATION NUMBER SHALL BE INCLUDED ON THE SUBMITTALS. BOTH THE SSE SEAL AND THE CERTIFICATE OF AUTOROIZATION SHALL BE ISSUED BY THE STATE IN WHICH THE PROJECT IS LOCATED, INCLUDING PROJECTS ON FEDERAL LAND.

   D. THE COMPANY THAT EMPLOYS THE SSE SHALL PROVIDE AN INSURANCE CERTIFICATE FOR PROFESSIONAL LIABILITY INSURANCE WITH AN AGGREGATE AMOUNT OF NO LESS THAN TWO MILLION DOLLARS ($2,000,000). CONTRACTS OR SUB-CONTRACTS FOR THIS PROJECT SHALL NOT INCLUDE A LIMIT OF LIABILITY CLAUSE.

   E. THE SSE THAT SEALED THE PLANS SHALL INCORPORATE A WRITTEN STATEMENT THAT THE CONTRACT DOCUMENT'S CRITERIA HAVE BEEN INCORPORATED INTO THE DESIGN.

4. THE CONTRACTOR SHALL REVIEW THE SUBMITTAL FOR QUANTITIES AND DIMENSIONS AND VERIFY THAT THE ABOVE INFORMATION HAS BEEN INCLUDED IN THE SUBMITTAL.

5. NO SUBMITTAL WILL BE REVIEWED UNLESS ALL OF THE ABOVE INFORMATION IS INCLUDED. THE ENGINEER OF RECORD SHALL NOT BE RESPONSIBLE FOR DELAYS CAUSED BY INCOMPLETE SUBMITTALS

SOIL PREPARATION AND FOUNDATIONS

1. THE FOUNDATION SYSTEM IS DESIGNED AS RECOMMENDED IN THE GEOTECHNICAL INVESTIGATION PREPARED BY KLEINFELDER, JOB NO. 62433, DATED 11/09/2005. A COPY IS IN THE SPECIFICATIONS OR IS AVAILABLE FOR INSPECTION AT THE ENGINEER'S PLACE OF BUSINESS.

2. REMOVE TOP SOIL CONTAINING ORGANIC MATERIAL AND PREPARE THE BUILDING PAD IN ACCORDANCE WITH THE CIVIL ENGINEERING PLANS, SPECIFICATIONS, AND GEOTECHNICAL INVESTIGATION.

3. REMOVE SOIL AS REQUIRED TO ALLOW FOR A LOW VOLUME CHANGE ZONE 24" THICK UNDER THE FLOOR SLAB AND DRAINAGE MATERIAL. FILL TO SUBGRADE ELEVATION SHOWN ON THE DRAWINGS WITH NON-EXPANSIVE FILL OR STABILIZED SOIL PER SPECIFICATION.

4. SOIL SUPPORTED FOUNDATIONS:

   A. DESIGN BEARING PRESSURE (NET) IS 3,500 psf FOR FOUNDATIONS BEARING ON UNDISTURBED SOIL OR APPROVED ENGINEERED FILL MATERIAL. BEARING MATERIALS SHALL BE VERIFIED BY A LICENSED GEOTECHNICAL ENGINEER.

   B. ALL FOUNDATIONS ARE DESIGNED WITH EARTH FORMED SIDES; THE TOP 7¼" OF THE FOUNDATION SHALL BE FORMED TO THE DESIGN DIMENSION WHEN VISIBLE AFTER CONSTRUCTION IS COMPLETE. THE CONSTRUCTED FOUNDATION DIMENSION SHALL BE NO LESS THAN THE DESIGN DIMENSION, AND NO MORE THAN 6" GREATER THAN THE DESIGN DIMENSION.

5. DO NOT BACKFILL FOUNDATIONS/BASEMENT WALLS UNTIL THE RESTRAINING SLABS OR ADEQUATE BRACING ARE IN PLACE. ALL BACKFILL SHALL BE PLACED AND COMPACTED IN ACCORDANCE WITH THE SPECIFICATION.

6. EXTERIOR SLABS SHALL SLOPE AWAY FROM THE STRUCTURE A MINIMUM OF ¼" PER FOOT UNLESS NOTED OTHERWISE.

CONCRETE

1. ALL CONCRETE HAS BEEN DESIGNED IN ACCORDANCE WITH ACI 318 AND THE BUILDING CODE, AND IN CONFORMANCE WITH THE CURRENT "ACI MANUAL OF CONCRETE PRACTICE".

2. THE CONCRETE REQUIREMENTS ARE:

   A. CEMENT SHALL BE TYPE I OR II CONFORMING TO ASTM C150. FLY ASH CONFORMING TO ASTM C618 TYPE C OR F MAY BE USED TO REPLACE A MAXIMUM OF 20% OF THE CEMENT BY WEIGHT.

   B. FINE AGGREGATE FOR NORMAL WEIGHT CONCRETE SHALL MEET ASTM C33.

   C. COARSE AGGREGATES FOR NORMAL WEIGHT CONCRETE SHALL CONFORM TO ASTM C33, GRADE 67 OR LARGER. COARSE AGGREGATES SHALL BE NO LESS THAN 50% OF THE TOTAL AGGREGATE BY WEIGHT, UNLESS APPROVED BY THE ENGINEER PRIOR TO MIX DESIGN SUBMITTAL.

   D. ALL COARSE AGGREGATE AGGREGATE FOR LIGHTWEIGHT CONCRETE SHALL CONFORM TO ASTM C330. COARSE AGGREGATE SHALL BE NO LESS THAN 50% OF THE TOTAL AGGREGATE BY VOLUME, UNLESS APPROVED BY THE ENGINEER PRIOR TO MIX DESIGN SUBMITTAL. AGGREGATE SHALL BE DELIVERED "VACUUM SATURATED" OR STORED SUBMERGED IN WATER.

   E. MIX REQUIREMENTS ARE:

LOCATION	MINIMUM F'c (PSI)	MINIMUM CEM. (PCY)	MAX W/C RATIO	AIR CONTENT	SLUMP INCHES[X]
EXTERIOR/FNDN. WALL	4000	470	0.45	5% ± 1%	2-5
FOUNDATIONS	4000	470	0.45	5% ± 1%	2-5
PIERS	3000	423	0.50	N/A	3-6
GRADE BEAMS	4000	470	0.45	5% ± 1%	2-5
INTERIOR SLAB***	4000	470	0.45	5% ± 1%	2-5
COLUMNS AND WALLS	4000	470	0.45	3% MAX.	2-5.

***SLAB ON GRADE SHALL HAVE A FLEXURAL STRENGTH OF 650 PSI WHERE SUBJECT TO VEHICLE TRAFFIC.

F'c SPECIFIED IS BASED ON THE 28 DAY COMPRESSIVE STRENGTH IN ACCORDANCE WITH ACI 318 ACCEPTANCE CRITERIA.

3. ADMIXTURES, HARDENERS AND CURING COMPOUNDS

   A. ALL CONCRETE ADMIXTURES SHALL, WHEN MIXED INTO CONCRETE, BE NON-CHLORIDE AND NON-CHLORIDE FORMING.

   B. ALL ADMIXTURES MUST CONFORM TO ASTM C-494 AND C-260.

   C. CONCRETE CURING COMPOUND AND SEALERS SHALL MEET ASTM C-309 TYPE 1 OR 1D.

   D. USE OF "SELF CONSOLIDATING" CONCRETE MUST BE SUBMITTED FOR APPROVAL WITH THE CONCRETE MIX DESIGN.

   E. CONCRETE PENETRATING HARDENER SEALERS SHALL BE USED ON ALL EXPOSED CONCRETE FLOORS UNLESS OTHER COATINGS ARE REQUIRED BY THE ARCHITECT.

4. MISCELLANEOUS CONCRETE DETAILS

   A. ALL EXPOSED EDGES OF CONCRETE SHALL BE CHAMFERED 3/4" INSIDE THE FORMS OR TOOLED 3/4" RADIUS UNLESS NOTED OTHERWISE.

   B. SLABS ON GRADE SHALL HAVE CONSTRUCTION JOINTS AND/OR CONTROL JOINTS (SAWN JOINTS) TO DIVIDE THE SLAB INTO PANELS, NOT TO EXCEED 256 SQUARE FEET. THE LONG DIMENSION SHALL NOT EXCEED THE SHORT DIMENSION BY MORE THAN 20%. CONTRACTOR TO SUBMIT PROPOSED LOCATIONS FOR APPROVAL.

   C. VERTICAL CONSTRUCTION JOINTS IN ELEVATED SLABS AND BEAMS, IF REQUIRED SHALL BE LOCATED AT MIDSPAN. ALL JOINTS SHALL BE THOROUGHLY CLEANED AND PURPOSELY ROUGHENED TO 1/4" AMPLITUDE PRIOR TO PLACING ADJACENT CONCRETE.

   D. THE CONTRACTOR SHALL BE RESPONSIBLE FOR THE DESIGN OF ALL FORMING AND SHORING. SHORING FOR ELEVATED SLABS SHALL BE SET SO THAT ANY LOAD DUE TO THE CONCRETE OPERATIONS DOES NOT CAUSE THE FORMS TO SETTLE (SLACK, TAKE-UP, ETC.). ELEVATED SLABS THAT SPAN OVER TWENTY FIVE FEET SHALL HAVE AN ADDITIONAL SLIGHT CAMBER SET INTO THE FORMS FOR THE DEAD LOAD DEFLECTION OF THE SLAB (APPROXIMATELY L/480). SCREEDS SHALL ALSO INCORPORATE THIS CAMBER TO CREATE A FINISHED SLAB OF UNIFORM THICKNESS. ELEVATED SLABS SHALL NOT HAVE THE FORMS REMOVED WITHOUT PLACING RESHORES. IF ADDITIONAL ELEVATED SLABS WILL BE SHORED ON TOP OF PREVIOUSLY CAST ELEVATED SLABS, THE SLABS SHALL BE RESHORED IN ACCORDANCE WITH ACI.

   E. NO ALUMINUM SHALL BE EMBEDDED IN CONCRETE. CONDUITS AND PIPING EMBEDDED IN CONCRETE WALLS, SLABS OR BEAMS SHALL BE SPACED A MINIMUM OF FOUR DIAMETERS AND THE OUTSIDE DIAMETER SHALL BE LESS THAN 30% OF THE MEMBER THICKNESS AND PLACED BETWEEN LAYERS OF REINFORCING.

   F. NO CONDUIT MAY BE EMBEDDED IN SLABS ON METAL DECK OR TOPPING SLABS ON PRECAST CONCRETE UNLESS SPECIFICALLY DETAILED OR NOTED OTHERWISE ON STRUCTURAL PLANS.

CONCRETE REINFORCING

1. MATERIALS

MATERIALS	ASTM	GRADE
PLATE & ANGLE	A36	___
REINFORCING STEEL	A615	60
WELDABLE REINFORCING STEEL	A706	60
WELDED WIRE FABRIC (WWF)	A185	60 (MIN)
HEADED STUDS	A108	___
DEFORMED BAR ANCHORS	A706	60
ANCHOR RODS (BOLTS)	F1554	36

2. DETAILS:

   A. WELDING OF REINFORCING STEEL IS PROHIBITED UNLESS NOTED OTHERWISE. WHEN WELDING IS APPROVED, WELDING SHALL BE IN ACCORDANCE WITH AWS D1.4 "WELDING REINFORCING STEEL, ETC."

   B. WELDED WIRE FABRIC SHALL BE FURNISHED IN FLAT SHEETS.

   C. SHOP DRAWINGS SHALL BE SUBMITTED WITH REINFORCING STEEL IN ACCORDANCE WITH ACI 315.

   D. WHEN MECHANICAL SPLICES ARE INDICATED ON THE PLANS, THE SPLICE SHALL DEVELOP 125% OF THE SPECIFIED YIELD STRENGTH OF THE REINFORCING STEEL. REQUESTS BY THE CONTRACTOR FOR MECHANICAL SPLICES MUST BE SUBMITTED IN WRITING.

3. PLACEMENT

   A. ALL REINFORCING AND EMBEDMENTS SHALL BE SUPPORTED ON CHAIRS/BOLSTERS TO THE DESIGN DIMENSIONS. SPACING SHALL BE SUFFICIENTLY CLOSE TO PREVENT DISPLACEMENT OR PERMANENT DEFORMATION DUE TO CONCRETE PLACEMENT, FOOT TRAFFIC OR VIBRATION. "PUDDLING IN" OR "PULLING UP" REINFORCING IS NOT AN ACCEPTABLE METHOD FOR PLACING REINFORCING. CHAIRS/BOLSTERS SHALL HAVE PLASTIC COATED FEET OR BE MADE OF STAINLESS STEEL. CHAIRS/BOLSTERS IN CONTACT WITH EARTH SHALL HAVE BOTTOM PLATES AND BE COATED TO PREVENT CORROSION. ANCHOR RODS SHALL BE HELD IN PLACE WITH TEMPLATES SUFFICIENTLY STRONG TO PREVENT DISPLACEMENT OR TILTING.

   B. MAINTAIN ACI CLEAR COVER ON REINFORCING AS LISTED BELOW UNLESS NOTED OTHERWISE.

CAST AGAINST EARTH (BOTTOM OR SIDES)	3"
FORMED - EXPOSED TO SOIL, WEATHER OR LIQUIDS	2"
FORMED SLABS - INTERIOR	1"
FORMED MEMBERS - INTERIOR	1.5"
SLABS ON GRADE (FROM TOP OF SLAB)	1.5"

   C. PROVIDE CORNER BARS OF THE SAME SIZE AND SPACING AS ADJACENT REINFORCING.

   D. OPENINGS IN WALLS OR SLABS SHALL BE REINFORCED PER DETAIL.

   E. REINFORCING STEEL SHALL BE LAPPED PER TABLE "A".

   F. WELDED WIRE FABRIC SHALL BE LAPPED ONE FULL SQUARE PLUS 2"

STRUCTURAL STEEL

1. STRUCTURAL STEEL SHALL MEET THE LATEST "CODE OF STANDARD FOR STEEL BUILDINGS AND BRIDGE," AND HAS BEEN DESIGNED IN ACCORDANCE WITH THE BUILDING CODE AND THE LATEST EDITION OF AISC "MANUAL OF STEEL CONSTRUCTION".

2. STRUCTURAL STEEL SHALL BE NEW AND MEET THE FOLLOWING REQUIREMENTS UNLESS NOTED OTHERWISE ON THE DRAWINGS:

TYPE	ASTM	GRADE
W & WT SHAPES	A992	---------
PIPE SECTIONS	A53	B (Fy=35 KSI)
RECTANGULAR HSS SECTIONS	A500	B (Fy=46 KSI)
STRUCTURAL BOLTS	A325	---------(ASTM F1852)
ERECTION BOLTS	A307	---------
HEADED ANCHOR STUDS	A108	1015/1025

3. ALL BOLTED CONNECTIONS SHALL BE STANDARD AISC BEARING TYPE FRAMING CONNECTIONS. BOLTS SHALL BE TENSION-INDICATING FOR INSPECTION PURPOSES.

4. ALL CONNECTIONS NOT DETAILED OR OTHERWISE NOTED SHALL BE PROVIDED BY THE FABRICATOR AND HIGHLIGHTED FOR THE ENGINEER OF RECORD'S REVIEW.

5. ALL WELDING SHALL BE IN ACCORDANCE WITH LATEST AWS CODE, SECTION D1.1 ALL WELD MATERIAL SHALL BE 70 KSI TENSILE STRENGTH.

6. STEEL FRAMING MEMBERS SHALL NOT BE SPLICED.

7. OPENINGS SHALL NOT BE FIELD-CUT IN THE FLANGE OR WEBS OF STEEL MEMBERS.

8. GALVANIZED STRUCTURAL STEEL SHALL CONFORM TO ASTM A123 FOR MEMBERS AND ASTM A153 FOR CONNECTION ELEMENTS. REPAIR ANY DAMAGED GALVANIZING COATING IN ACCORDANCE WITH ASTM A780.

STEEL DECKING

1. DECK SHALL BE ATTACHED TO ALL SUPPORTING MEMBERS.

   A. ATTACH METAL DECK TO STEEL MEMBERS WITH 5/8" DIAMETER PUDDLE WELDS. USE WELDING WASHERS FOR DECKS THINNER THAN 22 GAUGE. WELDS SHALL BE IN ACCORDANCE WITH THE CURRENT STANDARDS OF THE AWS. REFERENCE DECK ATTACHMENT DETAIL.

2. STEEL ROOF DECK SHALL BE 1 1/2" DEEP, 22 GAUGE, WIDE RIB METAL DECKING WITH THE FOLLOWING PROPERTIES:

MINIMUM Fy:	33 KSI
MINIMUM Ip:	0.155 IN^4
MINIMUM Sp:	0.186 IN^3
MINIMUM In:	0.183 IN^4
MINIMUM Sn:	0.192 IN^3

ROOF DECK SHALL RECIEVE FINISH PER SPECIFICATION. DECK SHALL BE CONTINUOUS OVER A MINIMUM OF THREE SPANS. EACH DECK UNIT SHALL BE ATTACHED TO SUPPORTING MEMBERS AND ADJACENT PANELS PER THE DIAPHRAGM ATTACHMENT DETAIL.

3. PROVIDE ANGLE FRAME SUPPORT METAL DECK AT ALL ROOF DRAINS AND OTHER OPENINGS GREATER THAN 8"X8". OPENINGS SMALL THAN 8" REQUIRE NO REINFORCEMENT.

COLD FORMED STEEL FRAMING

1. ALL COLD FORMED FRAMING DESIGN SHALL BE DELEGATED TO A SPECIALTY STRUCTURAL ENGINEER (SSE). THE DELEGATED DESIGN PACKAGE SHALL BE SUBMITTED IN ACCORDANCE TO THE "DELEGATED ENGINEERING OF STRUCTURAL COMPONENTS AND SYSTEMS" SECTION OF THE GENERAL STRUCTURAL NOTES.

2. ALL COLD-FORMED STEEL STUDS SHALL BE GALVANIZED PER AISI STANDARDS. APPLY ZINC-RICH PAINT TO ALL AREAS WHERE FINISH IS DAMAGED DUE TO WELDING.

3. PRODUCTS SHALL BE FORMED FROM STEEL MEETING THE REQUIREMENTS OF AISI, SPECIFICATIONS FOR THE DESIGN OF COLD-FORMED STEEL STRUCTURAL MEMBERS, UNLESS NOTED OTHERWISE.

4. STUD TRACK SECTIONS SHALL MEET OR EXCEED THICKNESS OF STUD MEMBERS, UNLESS NOTED OTHERWISE.

5. ALL FRAMING COMPONENTS SHALL BE CUT SQUARELY FOR ATTACHMENT TO PERPENDICULAR MEMBERS.

6. PROVIDE ALL ACCESSORIES INCLUDING, BUT NOT LIMITED TO, TRACKS, CLIPS, WEB STIFFENERS, FASTENERS, ANCHORAGE DEVICES, CONNECTION ANGLES, BRIDGING, AND MISCELLANEOUS HARDWARE REQUIRED TO COMPLETE ALL CONNECTIONS AND INSTALLATION.

7. FASTENING OF FRAMING COMPONENTS SHALL BE WITH SELF-TAPPING SCREWS OR WELDING OF SUFFICIENT SIZE TO INSURE THE STRENGTH OF THE CONNECTION. WELDS SHALL BE PERFORMED IN ACCORDANCE WITH THE LATEST AWS D1.3 CODE.

8. COLD-FORMED STEEL STUD PRODUCTS SHALL BE MANUFACTURED BY A CURRENT MEMBER OF THE STEEL STUD MANUFACTURER ASSOCIATION (SSMA) OR THE STEEL FRAMING INDUSTRY ASSOCIATION (SFIA).

   A. THE PHYSICAL AND STRUCTURAL PROPERTIES SHALL BE EQUIVALENT TO THOSE LISTED BY THE SSMA "PRODUCT TECHNICAL INFORMATION" AND ICC-ES ER-3064P FOR "S" AND "T" SECTIONS.

   B. PROVIDE WALL STUD BRIDGING SPACES AT 4'-0"O.C. MAXIMUM IN ALL EXTERIOR WALLS AND INTERIOR LOAD BEARING WALLS.

   C. PROVIDE DEFLECTION TRACK AT THE TOP OF ALL NON-LOAD BEARING STUD WALLS WHERE THE TOP OF WALL ABUTS THE BOTTOM OF THE STRUCTURE. DEFLECTION TRACK SHALL ACCOMMODATE A DEFLECTION DESCRIBED UNDER CONSTRUCTION DETAILS FOR STRUCTURAL MOVEMENT.

   D. ATTACH STUDS TO TRACK WITH A MINIMUM OF ONE SCREW IN EACH STUD FLANGE, UNLESS NOTED OTHERWISE.

UNISTRUT FRAMING SYSTEMS

1. SHOULD A UNISTRUT (OR APPROVED EQUAL) SYSTEM BE DESIGNED FOR THE SUPPORT OF MEDICAL EQUIPMENT, IT SHALL BE DESIGNED BY A SPECIALTY STRUCTURAL ENGINEER (SSE) IN ACCORDANCE TO THE REQUIREMENTS IN THE "DELEGATED ENGINEERING OF STRUCTURAL COMPONENTS AND SYSTEM" SECTION OF THE GENERAL STRUCTURAL NOTES.

POST INSTALLED ANCHORING SYSTEMS

1. SUBSTITUTION OF POST INSTALLED ANCHORS FOR EMBEDDED ANCHORS SHOWN ON THE DRAWINGS WILL NOT BE PERMITTED UNLESS APPROVED BY THE ENGINEER IN ADVANCE.

2. ANCHORS SHALL BE INSTALLED IN ACCORDANCE WITH THE MANUFACTURER'S PRINTED INSTALLATION INSTRUCTIONS (MPII) AND THE EVALUATION REPORT (ER/ESR) SPECIFIED INCLUDING HOLE PREPARATION, TEMPERATURE AND MOISTURE CONDITIONS.

3. ADHESIVE ANCHORS:

   A. THE CONTRACTOR SHALL ARRANGE ANCHOR MANUFACTURER'S REPRESENTATIVE TO PROVIDE ONSITE INSTALLATION TRAINING FOR ALL ANCHOR PRODUCTS SPECIFIED. THE CONTRACTOR MUST MAINTAIN TRAINING RECORDS OF ALL CONTRACTOR PERSONNEL INSTALLING ANCHORS AND SUBMIT TO THE ENGINEER OF RECORD PRIOR TO INSTALLING ANCHORS UPON REQUEST.

   B. ADHESIVE ANCHORS SHALL BE USED IN CONJUNCTION WITH THE APPROPRIATE ADHESIVE SYSTEM. STANDARD REINFORCING STEEL ANCHORED IN CONCRETE SHALL BE IN ACCORDANCE WITH ASTM A615 GRADE 60 UNLESS NOTED OTHERWISE.

   C. APPROVED ADHESIVE ANCHORS FOR PREVIOUSLY CAST CONCRETE:

MANUFACTURER/PRODUCT	REPORT NUMBER
HILTI HIT-HY200 SSS* WITH HIT-Z ROD	ICC-ES ESR-3187
HILTI HIT-HY200 SSS* WITH HOLLOW BIT & HAS-E ROD	ICC-ES ESR-3187
HILTI HIT-HY200 SSS* WITH HOLLOW BIT & STEEL REINFORCING	ICC-ES ESR-3187
*SAFE SET SYSTEM	
SIMPSON STRONG-TIE SET-XP WITH SPEED CLEAN DXS SYSTEM	ICC-ES ESR-2508
SIMPSON STRONG-TIE AT-XP WITH SPEED CLEAN DXS SYSTEM	IAPMO-UES ER-263

4. EXPANSION ANCHORS:

   A. EXPANSION ANCHORS WILL NOT BE ALLOWED WITHOUT APPROVAL FROM THE ENGINEER OF RECORD (EOR).

5. POWDER ACTUATED FASTENERS

   A. WHEN CALLED FOR ON THE PLANS, THE APPROVED ANCHORS ARE:

MANUFACTURER AND PRODUCT	USE	REPORT NUMBER
HILTI X-GN (1" EMBED)	METAL STUD TRACK TO CONCRETE	ICC-ES ESR-1752
HILTI X-EGN	METAL STUD TRACK TO STEEL	ICC-ES ESR-1752
HILTI* X-EDNK22 THQ12 (1/8<t<1/4)	METAL DECK TO STEEL	ICC-ES ESR-2197
X-EDN-19 THQ12 (3/16<t<3/8)		ICC-ES ESR-2776
X-ENP-19 L15 (t<1/4)		
HILTI* ENP2-21 L15		
SIMPSON STRONG-TIE PDPA	METAL STUD TRACK TO CONCRETE	ICC-ES ESR-2138
SIMPSON STRONG-TIE PDPA	METAL STUD TRACK TO STEEL	ICC-ES ESR-2138

* ALL FASTENERS SHALL MEET THE MINIMUM FULLY SEATED DEPTH INDICATED BY THE HILTI DEPTH GAUGE. NO EXCEPTIONS WILL BE APPROVED.

CONTRACT/CONSTRUCTION DOCUMENTS

1. THE CONTRACTOR SHALL BE RESPONSIBLE TO OBTAIN A FULL SET OF THE MOST RECENT REVISIONS OF EACH DOCUMENT INCLUDING ALL PLANS, SPECIFICATIONS, ADDENDA, AND SUPPLEMENTAL INSTRUCTIONS.

2. THE CONSTRACTOR SHALL REVIEW THE DOCUMENTS PRIOR TO FABRICATION AND/OR INSTALLATION OF ANY MATERIALS FOR CONFLICTS. IF CONFLICTS OCCUR THE CONTRACTOR SHALL USE THE MOST STRINGENT REQUIREMENT OR REQUEST A CLARIFICATION THROUGH A REQUEST FOR INFORMATION (RFI).

3. THE DOCUMENTS MAY NOT BE REPRODUCED IN WHOLE OR IN PART FOR USE ON PROJECTS OTHER THEN IDENTIFIED IN THE TITLE BLOCK. SHOULD THE CONTRACTOR USE THE DOCUMENTS AS A PORTION OF A SHOP DRAWING SUBMITTAL, THE CONTRACTOR SHALL BE RESPONSIBLE FOR ANY CONSEQUENCES RESULTING FROM ERRORS IN THE REPRODUCED DOCUMENTS.

4. DETAILS LABELED TYPICAL ARE INTENDED TO REPRESENT A CONDITION THAT OCCURS AT SEVERAL LOCATIONS IN THE PLANS WHETHER OR NOT THE DETAIL IS REFERENCED.

5. DO NOT SCALE THE PLANS AND DETAILS FOR THE PURPOSE OF ESTABLISHING DIMENSIONS.

CONTRACTOR'S RESPONSIBILITY

1. THE CONTRACTOR SHALL BE RESPONSIBLE FOR REVIEWING ALL SUB-CONTRACTOR SUBMITTALS AND NOTING ALL DEVIATIONS FROM THE CONSTRUCTION DOCUMENTS PRIOR TO SUBMITTING TO THE ENGINEER FOR REVIEW.

2. SUBSTITUTION REQUESTS SHALL BE SUBMITTED IN WRITING WITH THE COST REDUCTION AMOUNT AND THE SCHEDULE IMPACT FOR THE OWNER (SUBMITTALS WITHOUT THE COST AND SCHEDULE IMPACT WILL NOT BE REVIEWED). A COMPARISON OF THE DATA WITH THE MATERIAL SPECIFIED INCLUDING CODE APPROVALS SHALL BE PROVIDED.

3. REQUESTS FOR INFORMATION (RFI) SHALL BE SUBMITTED IN WRITING WITH COST, SCHEDULE IMPACT AND SUGGESTED SOLUTION INCLUDED. AN RFI THAT DOES NOT INCLUDE THE COST AND SCHEDULE IMPACT WILL NOT BE REVIEWED.

4. DEFECTIVE WORK REPORT (DWR) SHALL BE SUBMITTED TO THE ENGINEER WITHIN (2) WORKING DAYS OF THE OCCURENCE. THE DWR SHALL REPORT THE DEFECT AND PROPOSE A REMEDIATION OF THE DEFECT. THE CONTRACTOR SHALL BE RESPONSIBLE FOR ALL COSTS ASSOCIATED WITH THE REMEDIATION OF THE DEFECT INCLUDING ENGINEERING COSTS, IF ANY.

5. WHEN THE CONTRACTOR BECOMES AWARE OF WHAT MAY BE AN UNFORSEEN CONDITION THAT COULD AFFECT COST OR SCHEDULE, THE CONTRACTOR SHALL NOTIFY THE ENGINEER IN WRITING WITHIN (2) WORKING DAYS. AFTER REVIEW AND ENGINEER'S DETERMINATION THAT AN UNFORSEEN CONDITION EXISTS; THE CONTRACTOR SHALL SUBMIT A CHANGE ORDER REQUEST FOR APPROVAL WITH BOTH COST AND SCHEDULE IMPACT ATTACHED.

6. THE CONTRACTOR'S SCHEDULE MUST PROVIDE A REASONABLE TIME ALLOWANCE FOR THE ENGINEERING REVIEW AND APPROVAL.

7. THE CONTRACTOR WILL BE SOLELY RESPONSIBLE FOR SITE SAFETY. THE ENGINEER IS RESPONSIBLE FOR FOLLOWING THE CONTRACTOR'S CONSTRUCTION SITE SAFETY INSTRUCTIONS PROVIDED IN WRITING. ALTERNATELY, THE CONTRACTOR SHALL ASSIGN AN ESCORT TO ADVISE THE ENGINEER OF SITE SAFETY ISSUES DURING SITE VISITS. THE ENGINEER'S PURPOSE OF A SITE VISIT IS SOLELY TO BECOME FAMILIAR WITH THE GENERAL PROGRESS AND QUALITY OF THE PROJECT. THE ENGINEER'S SITE VISIT IS NOT A QUALITY CONTROL FUNCTION.

CONSTRUCTION MEANS AND METHODS ISSUES

1. SLAB ON GRADE AND ELEVATED SLABS ARE NOT DESIGNED TO SUPPORT CRANES, FORKLIFTS, TRUCKS, MANLIFTS OR OTHER CONSTRUCTION RELATED EQUIPMENT UNLESS NOTED AS SUCH. IT IS THE CONTRACTOR'S RESPONSIBILITY TO DETERMINE IF CONSTRUCTION EQUIPMENT CAN BE SAFELY OPERATED ON THESE SLABS AND TO REPAIR ANY DAMAGE THE EQUIPMENT MAY CAUSE.

2. THE CONSTRUCTION DOCUMENTS REPRESENT A STABLE STRUCTURE IN THE COMPLETED FORM. THE CONTRACTOR SHALL PROVIDE ANY TEMPORARY BRACING AND/OR SHORES TO SAFELY CONSTRUCT THE BUILDING AND PREVENT DAMAGE DURING CONSTRUCTION.

3. THE CONTRACTOR SHALL VERIFY ALL DIMENSIONS AND ELEVATIONS OF EXISTING CONSTRUCTION THAT MAY AFFECT THE PROJECT AND REPORT DISCREPENCIES TO THE ENGINEER. ANY DIMENSIONS FOR ELEVATIONS THAT IMPACT NEW WORK SHALL BE VERIFIED PRIOR TO FABRICATION OF ANY MATERIAL. EXISTING BUILDING ELEMENTS THAT ARE TO BE ABANDONED THAT INTERFERE WITH NEW CONSTRUCTION SHALL BE REMOVED.

4. WHEN A PIECE OF EQUIPMENT (HVAC, ELECTRICAL, KITCHEN, ETC.) IS PROVIDED THAT IS DIFFERENT THAN THE EQUIPMENT THAT THE STRUCTURE WAS DESIGNED FOR EITHER BY SIZE, WEIGHT OR CONFIGURATION, THE CONTRACTOR SHALL BE RESPONSIBLE FOR ALL COSTS ASSOCIATED WITH THE REMEDY OF THE SITUATION. THOSE COSTS SHALL INCLUDE THE ENGINEERING COSTS TO REDESIGN PORTIONS OF THE STRUCTURE TO ACCOMODATE THE SUBSTITUTED EQUIPMENT.

5. THE CONTRACTOR SHALL BE RESPONSIBLE FOR THE STRUCTURAL DESIGN AND MATERIALS FOR ATTACHING NON-STRUCTURAL ELEMENTS TO ANY PORTION OF THE STRUCTURE TO RESIST ALL LOADS, INCLUDING SEISMIC, IN A WAY THAT DOES NOT OVERSTRESS STRUCTURAL MEMBERS. NON-STRUCTURAL ELEMENTS CAN BE FOUND IN EACH OF THE OTHER DISCIPLINES (ARCHITECTURAL, MECHANICAL, ELECTRICAL, ETC.)

STRUCTURAL TESTS, INSPECTIONS, AND QUALITY ASSURANCE

ALL STRUCTURAL TESTS AND INSPECTIONS SHALL BE PERFORMED PER CHAPTER 17 OF THE BUILDING CODE WITH LOCAL SUPPLEMENTS, UNLESS MORE STRINGENT REQUIREMENTS ARE SPECIFIED.

TABLE A - REINFORCEMENT LAPS, EMBEDMENTS AND HOOK LENGTHS

fy = 60000 psi   f'c = 4000 psi

BAR SIZE (d)	CLEAR SPACING (S) (in.)			EMBEDMENT & CLASS A LAP (in.)						CLASS B LAP (in.)						HOOK EMBED (in.)
				TOP BAR			OTHER BARS			TOP BAR			OTHER BARS			
	2d	3d	5d	2d<S<3d	S≥3d	S≥5d	2d<S<3d	S≥3d	S≥5d	2d<S<3d	S≥3d	S≥5d	2d<S<3d	S≥3d	S≥5d	
3	3/4	1 1/8	1 7/8	28	18	12	21	14	12	36	24	14	28	18	12	8
4	1	1 1/2	2 1/2	37	25	15	28	19	12	48	32	19	37	25	15	10
5	1 1/4	1 7/8	3 1/8	46	31	18	36	24	14	60	40	24	46	31	18	12
6	1 1/2	2 1/4	3 3/4	55	37	22	43	28	17	72	48	29	55	37	22	15
7	1 3/4	2 5/8	4 3/8	81	54	32	62	42	25	105	70	42	81	54	32	18
8	2	3	5	92	62	37	71	47	28	120	80	48	92	62	37	20
9	2 1/4	3 3/8	5 5/8	104	70	42	80	54	32	136	90	54	104	70	42	22
10	2 1/2	3 3/4	6 3/8	117	78	47	90	60	36	153	102	61	117	78	47	25
11	2 7/8	4 1/4	7	130	87	52	100	67	40	170	113	68	130	87	52	27

NOTES

1. LENGTHS SHOWN CONFORM WITH NON-SEISMIC PROVISIONS OF ACI 318 FOR UNCOATED BARS.
2. BAR CLEAR SPACING IS THE CENTER TO CENTER BAR SPACING MINUS ONE BAR DIAMETER.
3. CLASS A LAP LENGTHS APPLY WHEN BAR LAPS ARE STAGGERED TO LAP HALF THE BARS AT THE SAME LOCATION. USE CLASS B LAP FOR ALL OTHER CASES.
4. TOP BARS ARE HORIZONTAL REINFORCEMENT PLACED SO THAT MORE THAN 12 INCHES OF CONCRETE IS CAST BELOW THE REINFORCEMENT.
5. MULTIPLY LAP AND EMBEDMENT LENGTHS GIVEN BY 2.0 FOR BARS WITH CLEAR SPACING OF TWO BAR DIAMETERS OR LESS, OR CONCRETE COVER OF ONE BAR DIAMETER OR LESS.

STATE OF MISSOURI
PAUL D. RADLEY JR.
04/06/2020
NUMBER
PE-2003015025
PROFESSIONAL ENGINEER

ACI
BOLAND
ARCHITECTS
1710 Wyandotte
Kansas City, MO 64108
T: 816.763.9600

ACI/Boland, Inc.
Kansas City | St. Louis
Licensee's Certificate of Authority Number:

STRUCTURAL, MECHANICAL, ELECTRICAL, & PLUMBING CONSULTANT

Professional Engineering Consultants, P.A.

623 Massachusetts Street, Suite 200
Lawrence, KS 66044

Licensee's Certificate of Authority Number:

Phone Number: 785.842.6464

Lee's Summit Medical Center
Hybrid OR Addition
2100 SE Blue Parkway
Lee's Summit, MO 64063

Date	04/03/20
Job Number	3-19058
Drawn By	JBR
Checked By	DLW

Revision

Number	Date	Description
1	4/6/2020	City Comments

S0.1

© 2019 ACI/BOLAND, Inc

GENERAL NOTES

BIM 360://190711-000 - Lee's Summit Med Cntr Hybrid OR Addn/190711-000-STRUCT-R19.rvt

3/23/2020 3:14:18 PM

REQUIRED SPECIAL INSPECTIONS AND TESTS OF STRUCTURAL STEEL FOR WELDING PROCESS

Inspection Tasks Prior to Welding

Inspection Tasks Prior to Welding	QUALITY CONTROL	QUALITY ASSURANCE
Welding procedure specifications (WPSs) available	P	P
Manufacturer certifications for welding consumables available	P	P
Material identification (type/grade)	O	O
Welder identification system[1]	O	O
Fit-up of groove welds (including joint geometry) • Joint preparation • Dimensions (alignment, root opening, root face, bevel) • Cleanliness (condition of steel surfaces) • Tacking (tack weld quality and location) • Backing type and fit (if applicable)	O	O
Configuration and finish of access holes	O	O
Fit-up of fillet welds • Dimensions (alignment, gaps at root) • Cleanliness (condition of steel surfaces) • Tacking (tack weld quality and location)	O	O
Check welding equipment	O	--

Inspection Tasks During Welding

Inspection Tasks During Welding	QUALITY CONTROL	QUALITY ASSURANCE
Use of qualified welders	O	O
Control and handling of welding consumables • Packaging • Exposure Control	O	O
No welding over cracked tack welds	O	O
Environmental conditions • Wind speed within limits • Precipitation and temperature	O	O
WPS followed • Settings on welding equipment • Travel speed • Selected welding materials • Shielding gas type/flow rate • Preheat applied • Interpass temperature maintained (min/max) • Proper position (F, V, H, OH)	O	O
Welding Techniques • Interpass and final cleaning • Each pass within profile limitations • Each pass meets quality requirements	O	O

Inspection Tasks After Welding

Inspection Tasks After Welding	QUALITY CONTROL	QUALITY ASSURANCE
Welds cleaned	O	O
Size, length and location of welds	P	P
Welds meet visual acceptance criteria • Crack prohibition • Weld/base-metal fusion • Crater cross section • Weld profiles • Weld size • Undercut • Porosity	P	P
Arc strikes	P	P
k-area[2]	P	P
Backing removed and weld tabs removed (if required)	P	P
Repair activities	P	P
Document acceptance or rejection of welded joint or member	P	P

Quality Control - Requirements on the part of the steel fabricator and erector.
Quality Assurance - Requirements on the part of the project owner's representative.
P - Perform these tasks for each weld joint or member.
O - Observe these items on a random basis. Operations need not be delayed pending these inspections

[1] - The fabricator or erector, as applicable, shall maintain a system by which a welder who has welded a joint or member can be identified. Stamps, if used, shall be the low-stress type.

[2] - When welding of doubler plates, continuity plates or stiffeners has been performed in the k-area, visually inspect the web k-area for cracks within 3 inches (75 mm) of the weld.

REQUIRED SPECIAL INSPECTIONS AND TESTS OF CAST-IN-PLACE DEEP FOUNDATION ELEMENTS

TYPE	FREQUENCY
1. Inspect drilling operations and maintain complete and accurate records for each element.	Continuous
2. Verify placement locations and plumbness, confirm element diameters, bell diameters (if applicable), lengths, embedment into bedrock (if applicable) and adequate end-bearing strata capacity. Record concrete or grout volumes	Continuous
3. For concrete elements, perform tests and additional special inspections in accordance with Section 1705.3.	

REQUIRED SPECIAL INSPECTIONS AND TESTS OF STRUCTURAL STEEL FOR BOLTING PROCESS

Inspection Tasks Prior to Bolting

Inspection Tasks Prior to Bolting	QUALITY CONTROL	QUALITY ASSURANCE
Manufacturer certifications available for fastener materials	O	P
Fasteners marked in accordance with ASTM requirements	O	O
Proper fasteners selected for the joint detail (grade, type, bolt length if threads are to be excluded from shear plane)	O	O
Proper bolting procedure selected for joint detail	O	O
Connecting elements, including the appropriate faying surface condition and hole preparation, if specified, meet applicable requirements	O	O
Pre-installation verification testing by installation personnel observed and documented for fastener assemblies and methods used	P	O
Proper storage provided for bolts, nuts, washers and other fastener components	O	O

Inspection Tasks During Bolting

Inspection Tasks During Bolting	QUALITY CONTROL	QUALITY ASSURANCE
Fastener assemblies, of suitable condition, placed in all holes and washers (if required) are positioned as required	O	O
Joint brought to the snug-tight condition prior to the pretensioning operation	O	O
Fastener component not turned by the wrench prevented from rotating	O	O
Fasteners are pretentioned in accordance with the RCSC Specification, progressing systematically from the most rigid point toward the free edges	O	O

Inspection Tasks After Bolting

Inspection Tasks After Bolting	QUALITY CONTROL	QUALITY ASSURANCE
Document acceptance or rejection of bolted connections	P	P

Quality Control - Requirements on the part of the steel fabricator and erector.
Quality Assurance - Requirements on the part of the project owner's representative.
P - Perform these tasks for each weld joint or member.
O - Observe these items on a random basis. Operations need not be delayed pending these inspections

Inspection of Steel Elements of Composite Construction Prior to Concrete Placement

Inspection of Steel Elements of Composite Construction Prior to Concrete Placement	QUALITY CONTROL	QUALITY ASSURANCE
Placement and installation of steel deck	P	P
Placement and installation of steel headed stud anchors	P	P
Document acceptance or rejection of steel elements	P	P

Quality Control - Requirements on the part of the steel fabricator and erector.
Quality Assurance - Requirements on the part of the project owner's representative.
P - Perform these tasks for each weld joint or member.
O - Observe these items on a random basis. Operations need not be delayed pending these inspections

Special Inspection Additional Requirements:

- Additional items that need special inspection, in the opinion of the building official, shall be inspected.

- Coordination of Special Inspections with construction of the inspected items shall be the responsibility of the contractor.

- If Special Inspection is waived by the Authority having Jurisdiction, the general contractor shall provide the designer of record with a copy of the written exemption for each item that has been waived.

- The building official may perform inspections in addition to and/or concurrently with the Special Inspection's outlined in the tables.

- The general contractor is responsible for implementing a quality control program. The quality control program is in addition to the Special Inspection requirements and must meet or exceed those responsibilities required as part of the contract drawings and specifications.

REQUIRED SPECIAL INSPECTIONS AND TESTS OF SOILS

TYPE	FREQUENCY
1. Verify materials below shallow foundations are adequate to achieve the design bearing capacity.	Periodic
2. Verify excavations are extended to proper depth and have reached proper material.	Periodic
3. Perform classification and testing of compacted fill materials.	Periodic
4. Verify use of proper materials, densities and lift thicknesses during placement and compaction of compacted fill.	Continuous
5. Prior to placement of compacted fill, inspect subgrade and verify that site has beem prepared properly.	Periodic

REQUIRED SPECIAL INSPECTIONS AND TESTS OF CONCRETE CONSTRUCTION

TYPE	FREQUENCY	REFERENCED STANDARD	IBC REFERENCE
1. Inspect reinforcement, including prestressing tendons, and verify placement.	Periodic	ACI 318 Ch. 20, 25.2, 25.3, 26.6.1-26.6.3	1908.4
2. Reinforcing bar welding: a. Verify weldability of reinforcing bars other than ASTM A706 b. Inspect single-pass fillet welds, maximum 5/16"; and c. Inspect all other welds.	 Periodic Periodic Continuous	AWS D1.4 ACI 318: 26.6.4	—
3. Inspect anchors cast in concrete.	Periodic	ACI 318: 17.8.2	
4. Inspection of anchors post installed in hardened concrete members.[b] a. Adhesive anchors installed in horizontally or upwardly inclined orientations to resist sustained tension loads. b. Mechanical anchors and adhesive anchors not defined in 4.a.	 Continuous Periodic	 ACI 318: 17.8.2.4 ACI 318: 17.8.2	—
5. Verify use of required design mix.	Periodic	ACI 318: Ch. 19, 26.4.3, 26.4.4	1904.1, 1904.2 1908.2, 1908.3
6. Prior to concrete placement, fabricate specimens for strength tests, perform slump and air content tests, and determine the temperature of the concrete.	Continuous	ASTM C172, ASTM C31, ACI 318: 26.5, 26.12	1908.10
7. Inspection of concrete and shotcrete placement for proper application techniques.	Continuous	ACI 318: 26.5	1908.6, 1908.7, 1908.8
8. Verify maintenance of specified curing temperature and techniques.	Periodic	ACI 318: 26.5.3-26.5.5	1908.9
9. Inspection of prestressed concrete for: a. Application of prestressing forces; and b. Grouting of bonded prestressing tendons.	 Continuous Continuous	 ACI 318: 26.10 ACI 318: 26.10	—
10. Inspect erection of precast concrete members.	Periodic	ACI 318: Ch. 26.9	
11. Verify in-situ concrete strength, prior to stressing of tendons in post-tensioned concrete and prior to removal of shores and forms from beams and structural slabs.	Periodic	ACI 318: 26.11.2	—
12. Inspect formwork for shape, location and dimensions of the concrete member being formed.	Periodic	ACI 318: 26.11.1.2(b)	—

(a) Where applicable, see Section 1705.12, Special inspections for seismic resistance.
(b) Specific requirements for special inspection shall be included in the research report for the anchor issued by an approved source in accordance with 17.8.2 in ACI 318, or other qualification procedures. Where specific requirements are not provided, special inspection requirements shall be specified by the registered design professional and shall be approved by the building official prior to the commencement of the work.

REQUIRED SPECIAL INSPECTIONS OF STEEL CONSTRUCTION OTHER THAN STRUCTURAL STEEL

TYPE	FREQUENCY	REFERENCED STANDARD
1. Material verification of cold-formed steel deck:		
a. Identification markings to conform to ASTM standards specified in the approved construction documents.	Periodic	Applicable ASTM material standards
b. Manufacturer's certified test reports.	Periodic	
2. Inspection of welding:		
a. Cold-formed steel deck:		
1) Floor and roof deck welds.	Periodic	AWS D1.3

REQUIRED SPECIAL INSPECTIONS OF OPEN-WEB STEEL JOISTS AND JOIST GIRDERS

TYPE	FREQUENCY	REFERENCED STANDARD
1. Installation of open-web steel joists and joist girders.		
a. End connections - welding or bolted.	Periodic	SJI specificaitons listed in Section 2207.1.
b. Bridging - horizontal or diagonal.		
1. Standard bridging	Periodic	SJI specificaitons listed in Section 2207.1.
2. Bridging that differs from the SJI specifications listed in Section 2207.1.	Periodic	

ACI BOLAND ARCHITECTS
1710 Wyandotte
Kansas City, MO 64108
T: 816.763.9600

ACI/Boland, Inc.
Kansas City | St. Louis
Licensee's Certificate of Authority Number:

STRUCTURAL, MECHANICAL, ELECTRICAL, & PLUMBING CONSULTANT

Professional Engineering Consultants, P.A.

623 Massachusetts Street, Suite 200
Lawrence, KS 66044

Licensee's Certificate of Authority Number:

Phone Number: 785.842.6464

Lee's Summit Medical Center

Hybrid OR Addition
2100 SE Blue Parkway
Lee's Summit, MO 64063

Date	03/23/20
Job Number	3-19058
Drawn By	JBR
Checked By	DLW

Revision

Number	Date	Description

S0.2

© 2019 ACI/BOLAND, Inc

INSPECTION TABLES

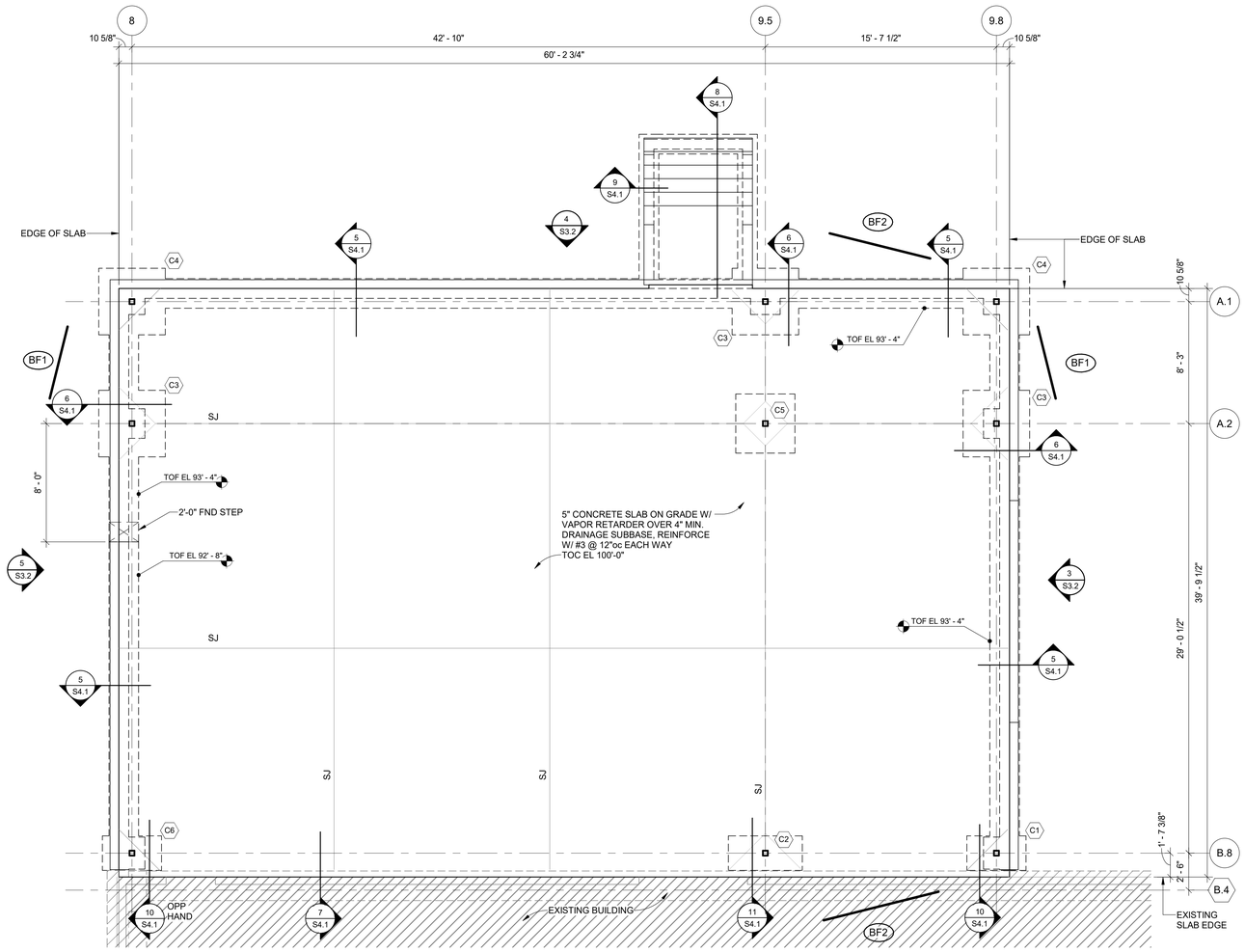

1 FOUNDATION PLAN
1/4" = 1'-0"

NORTH

FOUNDATON PLAN NOTES:

1. REFERENCE SCHEDULE FOR TOP OF GRADE BEAM ELEVATIONS.
2. SEE SHEET S0.1 FOR GENERAL STRUCTURAL NOTES AND SHEET S0.2 FOR SPECIAL INSPECTION REQUIREMENTS.
3. CENTER ALL FOOTINGS BELOW GRID LINE INTERSECTIONS UNLESS SHOWN OR NOTED OTHERWISE.
4. SEE SHEET S4.1 FOR TYPICAL FOUNDATION DETAILS.
5. PROVIDE 1/2" EXPANSION JOINT MATERIAL BETWEEN EXTERIOR CONCRETE AND THE BUILDING, TYPICAL.
6. REFERENCE MECHANICAL DRAWINGS FOR MISCELLANEOUS FLOOR DRAINS AND OTHER SLAB PENETRATIONS.
7. REFERENCE ARCHITECTURAL DRAWINGS FOR NON-LOAD BEARING WALLS.
8. COORDINATE MEDICAL EQUIPMENT ANCHORAGE WITH EQUIPMENT SUPPLIERS.

FOUNDATION PLAN MARKS:

C# — COLUMN MARK, REFERENCE COLUMN SCHEDULE, SHEET S3.1

F# — FOOTING MARK, REFERENCE FOOTING SCHEDULE, SHEET S3.1

BRACE FRAME, REFERENCE BRACING SCHEDULE, SHEET S3.2

S.J. — SLAB CONSTRUCTION JOINT, REFERENCE 1/ S4.1

DAVID L. WETHINGTON
NUMBER E-19991377200
03-23-2020
REGISTERED PROFESSIONAL ENGINEER
STATE OF MISSOURI

ACI BOLAND ARCHITECTS
1710 Wyandotte
Kansas City, MO 64108
T: 816.763.9600

ACI/Boland, Inc.
Kansas City | St. Louis
Licensee's Certificate of Authority Number:

STRUCTURAL, MECHANICAL, ELECTRICAL, & PLUMBING CONSULTANT

Professional Engineering Consultants, P.A.

623 Massachusetts Street, Suite 200
Lawrence, KS 66044

Licensee's Certificate of Authority Number:

Phone Number: 785.842.6464

Lee's Summit Medical Center

Hybrid OR Addition
2100 SE Blue Parkway
Lee's Summit, MO 64063

Date	03/23/20
Job Number	3-19058
Drawn By	JBR
Checked By	DLW

Revision

Number	Date	Description

S1.1

© 2019 ACI/BOLAND, Inc

FOUNDATION PLAN

3/23/2020 3:14:19 PM
BIM 360://190711-000 - Lee's Summit Med Cntr Hybrid OR Addn/190711-000-STRUCT-R19.rvt

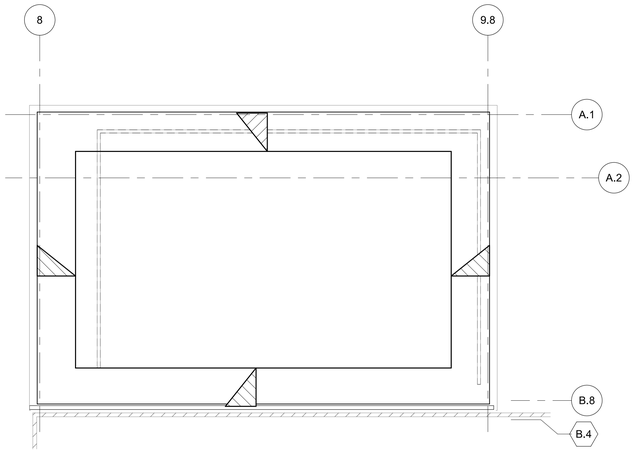

2 DRIFT PLAN
1/8" = 1'-0"

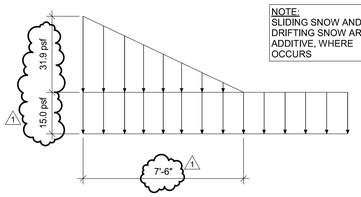

DRIFT DIAGRAM #2

NOTE:
SLIDING SNOW AND DRIFTING SNOW ARE ADDITIVE, WHERE OCCURS

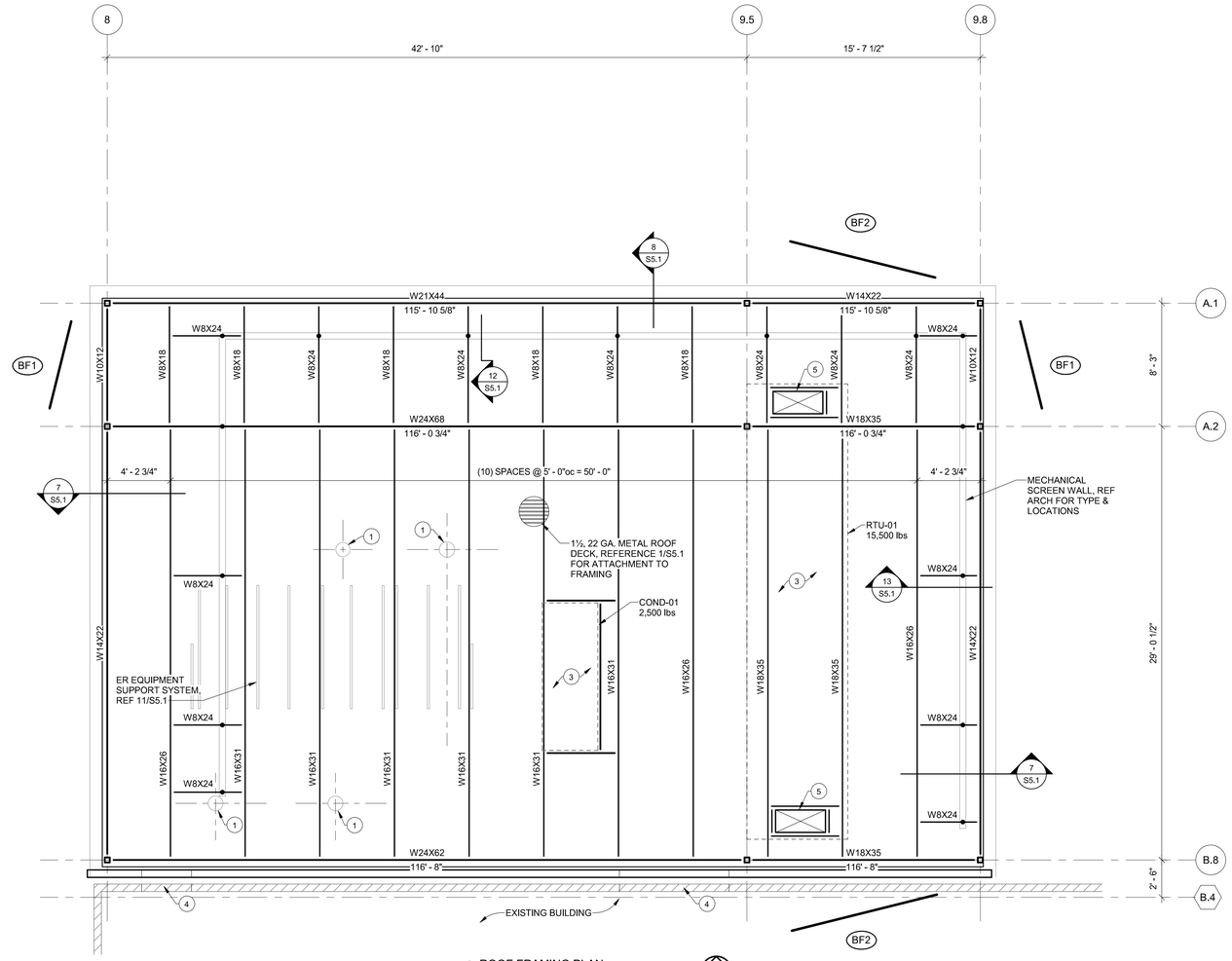

1 ROOF FRAMING PLAN
1/4" = 1'-0"

NORTH

ROOF FRAMING PLAN NOTES:

1. SEE SHEETS S0.1 FOR GENERAL STRUCTURAL NOTES AND SHEET S0.2 FOR SPECIAL INSPECTION REQUIREMENTS.
2. SEE SHEET S5.1 FOR TYPICAL FRAMING DETAILS.
3. SEE SHEET S5.1 FOR TYPICAL OPENINGS IN THE ROOF. REFERENCE MECHANICAL, ELECTRICAL AND ARCHITECTURAL DRAWINGS FOR SIZE AND LOCATION OF OPENINGS NOT NOTED ON FRAMING PLANS. ROOF DRAINS SHALL BE CONSIDERED A ROOF OPENING.
4. VERIFY THE SIZE AND LOCATIONS OF ALL SUSPENDED MECHANICAL UNITS, ELECTRICAL UNITS, ROOF TOP UNITS AND ROOF OPENINGS WITH THE MECHANICAL AND ELECTRICAL DRAWINGS AND THE CONTRACTORS. DESIGN ROOF JOISTS FOR THE ADDITION LOADS FROM THE UNITS.
5. SUPPORT FOR O.R. EQUIPMENT SHALL BE A DELEGATED DESIGN BY THE GENERAL CONTRACTOR SUBJECT TO THE SUBMITTAL REQUIREMENTS LISTED IN THE STRUCTURAL GENERAL NOTES.

ROOF FRAMING PLAN MARKS:

- BRACE FRAME, REFERENCE BRACING SCHEDULE, SHEET S3.2
- (1) EQUIPMENT BOOM SUPPORT FRAME. REFERENCE PLAN DETAIL 2/S2.1, VERIFY LOCATIONS/TYPE WITH ARCHITECT.
- (2) C8x11.5 FOR MECHANICAL EQUIPMENT SUPPORT
- (3) PROVIDE 4" (TOTAL THICKNESS) CONCRETE SLAB WITHIN RTU CURB, REINFORCE WITH 6x6-W2.9xW2.9 WWF
- (4) PROVIDE LIGHT GAGE LINTEL AND JAMB FOR NEW OPENING IN EXISTING WALL:
  LINTEL: (2) 600S162-54 METAL CHANNELS WITH 600T125-54 TRACKS TOP & BOTTOM
  JAMB: (1) KING STUD & (2) BEARING STUDS

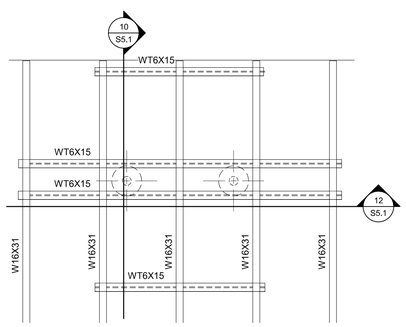

3 TYPICAL EQUIPMENT BOOM FRAMING PLAN
1/4" = 1'-0"

BIM 360://190711-000 - Lee's Summit Med Cntr Hybrid OR Addn/190711-000-STRUCT-R19.rvt

STATE OF MISSOURI
PAUL D. RADLEY JR.
04/06/2020
NUMBER
PE-2003015025
PROFESSIONAL ENGINEER

ACI BOLAND ARCHITECTS
1710 Wyandotte
Kansas City, MO 64108
T: 816.763.9600

ACI/Boland, Inc.
Kansas City | St. Louis
Licensee's Certificate of Authority Number:

STRUCTURAL, MECHANICAL, ELECTRICAL, & PLUMBING CONSULTANT

Professional Engineering Consultants, P.A.

623 Massachusetts Street, Suite 200
Lawrence, KS 66044

Licensee's Certificate of Authority Number:

Phone Number: 785.842.6464

Lee's Summit Medical Center

Hybrid OR Addition
2100 SE Blue Parkway
Lee's Summit, MO 64063

Date	04/03/20
Job Number	3-19058
Drawn By	JBR
Checked By	DLW

Revision

Number	Date	Description
1	4/6/2020	City Comments

S2.1

© 2019 ACI/BOLAND, Inc

ROOF FRAMING PLAN

COLUMN SCHEDULE

MARK (C#)	C1	C2	C3	C4	C5	C6
ROOF EL. VARIES	HSS4X4X1/4	HSS4X4X1/4	HSS4X4X1/4	HSS4X4X1/4	HSS4X4X1/4	HSS4X4X1/4
FINISH FLOOR EL. 100' - 0"						
BASE PLATE	2/S3.1	2/S3.1	2/S3.1	2/S3.1	2/S3.1	2/S3.1
PLATE DIMENSIONS LxWxD	10"x10"x3/4"	10"x10"x3/4"	10"x10"x3/4"	10"x10"x3/4"	10"x10"x3/4"	10"x10"x3/4"
ANCHOR BOLTS	(4) 3/4" DIA.	(4) 3/4" DIA.	(4) 3/4" DIA.	(4) 3/4" DIA.	(4) 3/4" DIA.	(4) 3/4" DIA.
DETAIL	1/S3.1	1/S3.1	1/S3.1	1/S3.1	1/S3.1	1/S3.1
PILASTER SIZE	2'-2"x1'-9"	N/A	2'-0"x1'-9"	1'-9"x1'-9"	N/A	2'-2"x1'-9"
VERTICAL REINFORCING	(8) #8		(8) #8	(8) #8		(8) #8
TIES	#3 @ 12"		#3 @ 12"	#3 @ 12"		#3 @ 12"
TOP ELEVATION	99'-4"		99'-4"	99'-4"		99'-4"
DETAIL	3/ S3.1		4/ S3.1	5/ S3.1		3/ S3.1
FOOTING SIZE	2'-4"x4'-0"x1'-0"	2'-4"x5'-0"x1'-6"	4'-6" SQ x1'-0"	4'-6" SQ x1'-0"	4'-6" SQ x1'-6"	2'-4"x4'-0"x1'-0"
REINFORCING	#4 @ 6"O.C. EACH WAY	#4 @ 6"O.C. EACH WAY	#4 @ 6"O.C. EACH WAY	#4 @ 6"O.C. EACH WAY	#4 @ 6"O.C. EACH WAY	#4 @ 6"O.C. EACH WAY
TOP ELEVATION	93'-4"	99'-4"	93'-4"	93'-4"	99'-4"	92'-8"

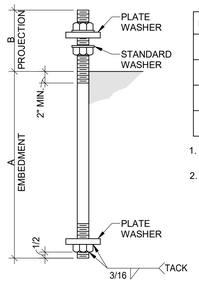

DIAMETER	A	B	PLATE SIZE
3/4"	1'-0"	6"	1/4"X2"Ø
1"	1'-6"	6"	3/8"X2 1/2"Ø
1 1/4"	2'-2"	8"	1/2"X3"Ø
1 1/2"	2'-10"	8"	1/2"X3"Ø

1. ALL ANCHOR BOLTS ARE TO BE SUPPLIED WITH 3 NUTS.
2. MINIMUM EMBEDMENT LENGTH OF ANCHOR MUST BE PLACED INTO A SINGLE POUR OF CONCRETE

1 TYPICAL ANCHOR ROD DETAIL
3/4" = 1'-0"

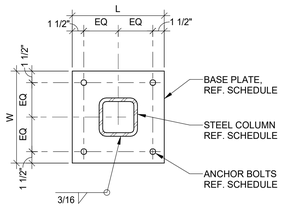

2 BASE PLATE DETAIL
1 1/2" = 1'-0"

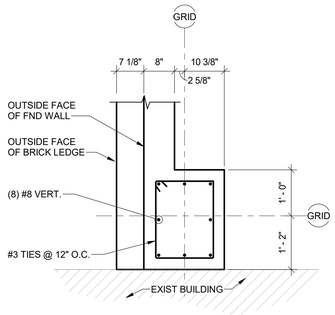

3 C1 PILASTER
3/4" = 1'-0"

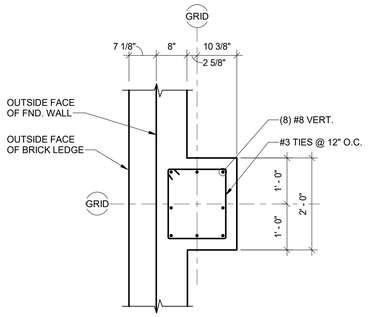

4 C3 PILASTER
3/4" = 1'-0"

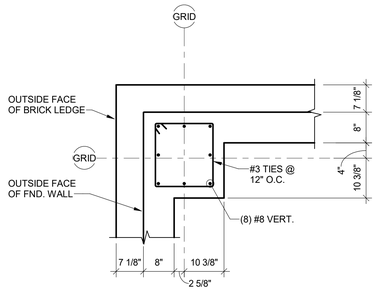

5 C4 PILASTER
3/4" = 1'-0"

WETHINGTON NUMBER E-199913726 03-23-2020

ACI BOLAND ARCHITECTS
1710 Wyandotte
Kansas City, MO 64108
T: 816.763.9600

ACI/Boland, Inc.
Kansas City | St. Louis
Licensee's Certificate of Authority Number:

STRUCTURAL, MECHANICAL, ELECTRICAL, & PLUMBING CONSULTANT

Professional Engineering Consultants, P.A.

623 Massachusetts Street, Suite 200
Lawrence, KS 66044

Licensee's Certificate of Authority Number:

Phone Number: 785.842.6464

Lee's Summit Medical Center

Hybrid OR Addition
2100 SE Blue Parkway
Lee's Summit, MO 64063

Date	03/23/20
Job Number	3-19058
Drawn By	JBR
Checked By	DLW

Revision

Number	Date	Description

S3.1

© 2019 ACI/BOLAND, Inc

COLUMN SCHEDULE

3/23/2020 3:14:22 PM
BIM 360://190711-000 - Lee's Summit Med Cntr Hybrid OR Addn/190711-000-STRUCT-R19.rvt

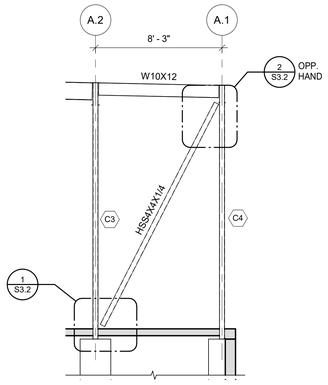

BF1

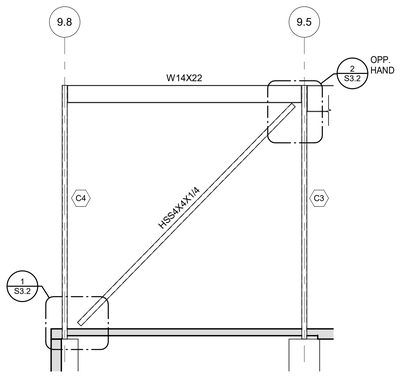

BF2

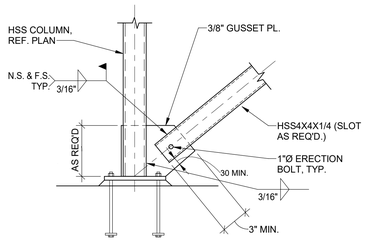

1 BRACE FRAME CONNECTION DETAIL
NO SCALE

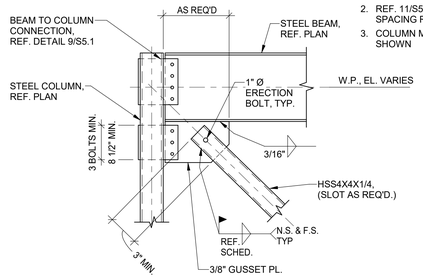

NOTES:
1. PROVIDE CLASS A FAYING SURFACE AT BOLTED CONNECTIONS
2. REF. 11/S5.1 FOR BOLT SPACING REQUIREMENTS
3. COLUMN MAY VARY FROM SHOWN

2 BRACE FRAME CONNECTION DETAIL
NO SCALE

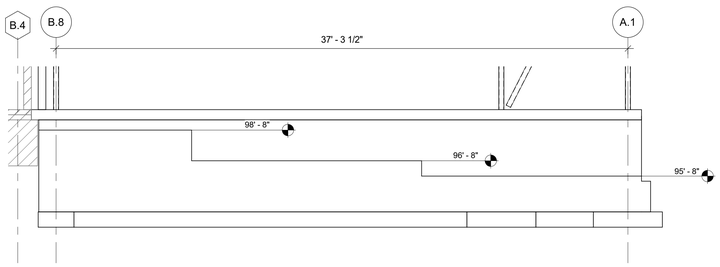

3 BRICK SHELF ELEVATION EAST
1/4" = 1'-0"

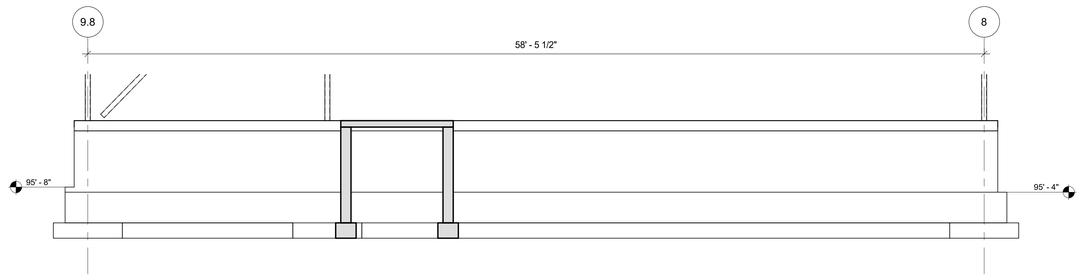

4 BRICK SHELF ELEVATION NORTH
1/4" = 1'-0"

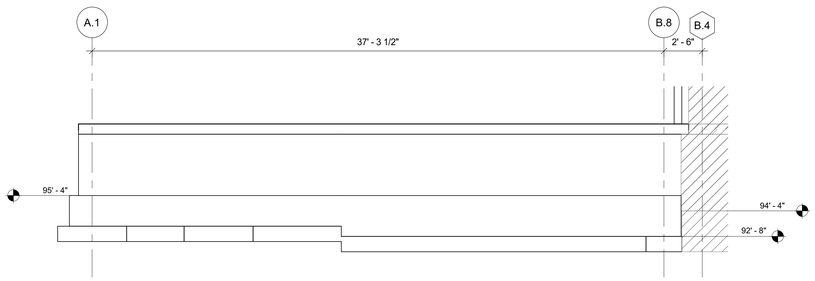

5 BRICK SHELF ELEVATION WEST
1/4" = 1'-0"

3/23/2020 3:14:25 PM

BIM 360://190711-000 - Lee's Summit Med Cntr Hybrid OR Addn/190711-000-STRUCT-R19.rvt

DANIEL L. WETHINGTON
NUMBER
E-19991137726
03-23-2020
PROFESSIONAL ENGINEER
STATE OF MISSOURI

ACI BOLAND ARCHITECTS

1710 Wyandotte
Kansas City, MO 64108
T: 816.763.9600

ACI/Boland, Inc.
Kansas City | St. Louis
Licensee's Certificate of Authority Number:

STRUCTURAL, MECHANICAL, ELECTRICAL, & PLUMBING CONSULTANT

Professional Engineering Consultants, P.A.

623 Massachusetts Street, Suite 200
Lawrence, KS 66044

Licensee's Certificate of Authority Number:

Phone Number: 785.842.6464

Lee's Summit Medical Center

Hybrid OR Addition
2100 SE Blue Parkway
Lee's Summit, MO 64063

Date	03/23/20
Job Number	3-19058
Drawn By	JBR
Checked By	DLW

Revision

Number	Date	Description

S3.2

© 2019 ACI/BOLAND, Inc

BRACE FRAME SCHEDULE & DETAILS

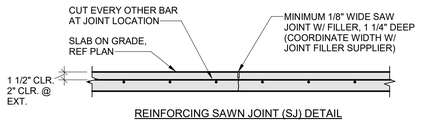

REINFORCING SAWN JOINT (SJ) DETAIL

1 TYPICAL SLAB ON GRADE JOINT DETAIL
3/4" = 1'-0"

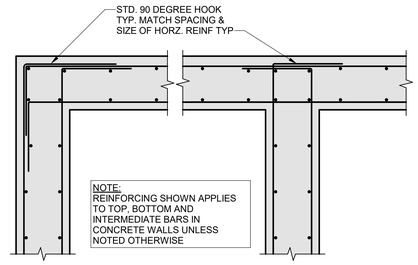

2 CORNER AND INTERSECTION REINFORCING
NO SCALE

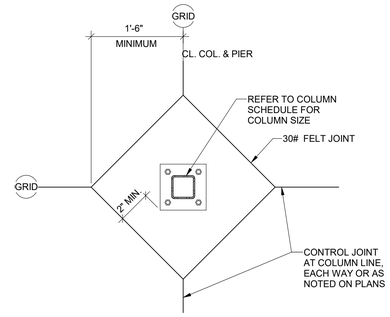

3 ISOLATION JOINTS AT COLUMN HSS
NO SCALE

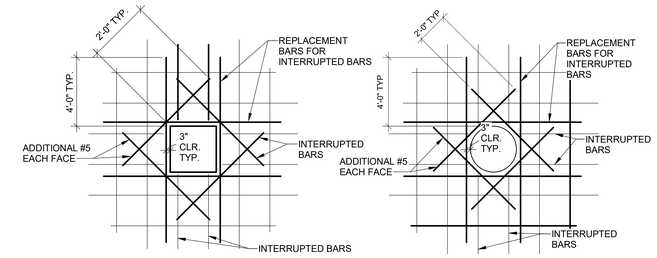

NOTES:

1. USE THIS DETAIL FOR ALL OPENINGS GREATER THAN 8" IN CONCRETE WALLS AND SLABS, PROVIDE (2) #5 ON DIAGONAL AT EACH CORNER AS SHOWN. EXTEND BARS 2'-0" PAST OPENING. REPLACE ALL VERTICAL AND HORIZONTAL BARS INTERUPTED BY THE OPENING WITH AN EQUAL NUMBER AND SIZE BARS EVENLY DIVIDED ON EACH SIDE OF THE OPENING UNLESS NOTED OTHERWISE.
2. REFER TO PLAN FOR ALL OPENING LOCATIONS.

4 TYPICAL SLAB/WALL OPENINGS
NO SCALE

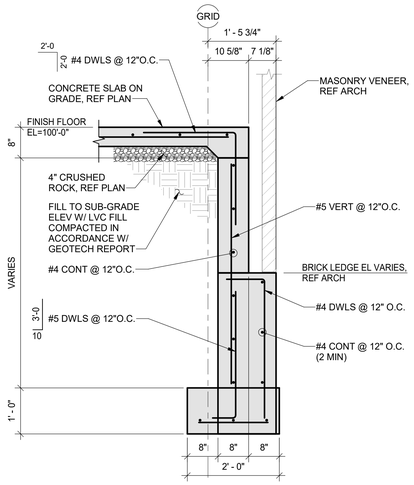

5 FOUNDATION SECTION
3/4" = 1'-0"

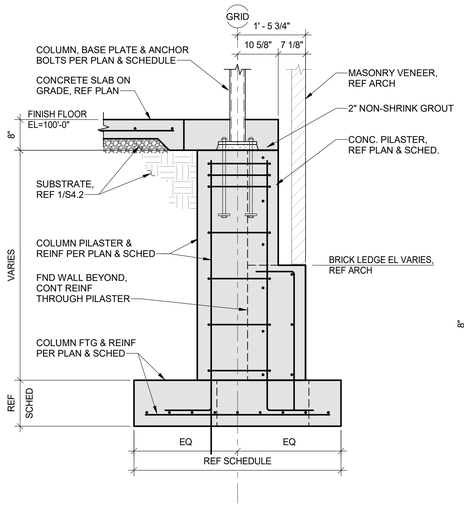

6 FOUNDATION SECTION
3/4" = 1'-0"

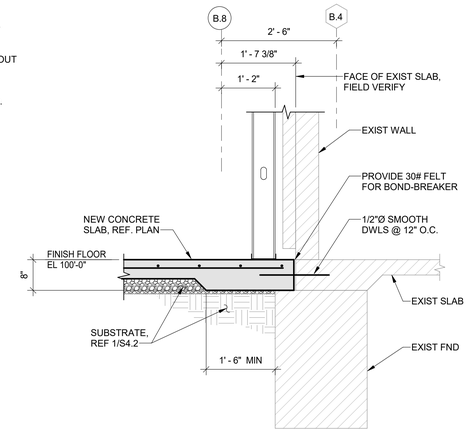

7 FOUNDATION SECTION
3/4" = 1'-0"

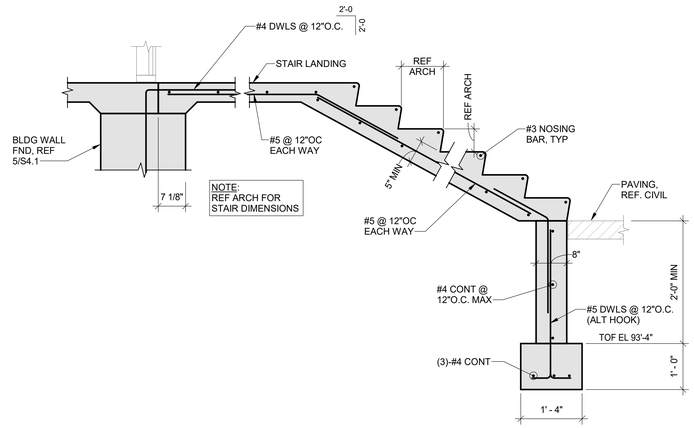

8 CONCRETE STAIR SECTION
3/4" = 1'-0"

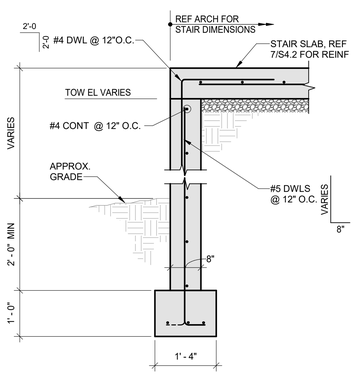

9 CONCRETE STAIR SECTION
3/4" = 1'-0"

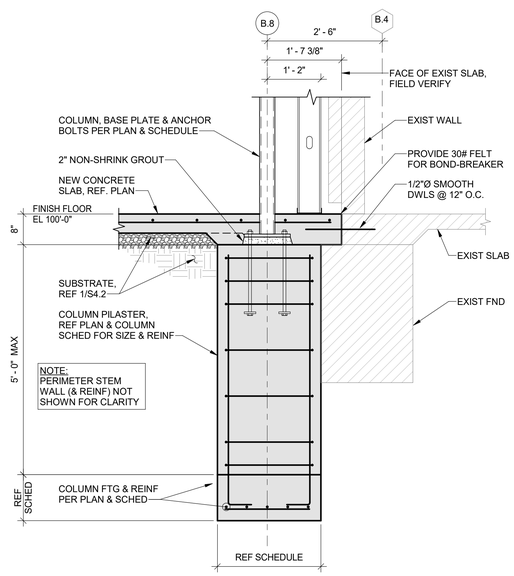

10 FOUNDATION SECTION
3/4" = 1'-0"

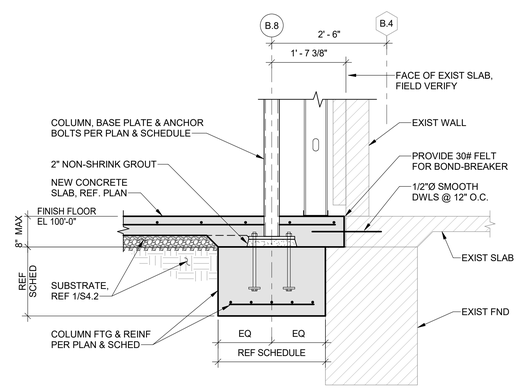

11 FOUNDATION SECTION
3/4" = 1'-0"

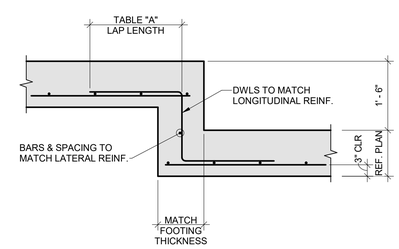

12 STEP FOOTING DETAIL
3/4" = 1'-0"

ACI BOLAND ARCHITECTS
1710 Wyandotte
Kansas City, MO 64108
T: 816.763.9600

ACI/Boland, Inc.
Kansas City | St. Louis
Licensee's Certificate of Authority Number:

STRUCTURAL, MECHANICAL, ELECTRICAL, & PLUMBING CONSULTANT

Professional Engineering Consultants, P.A.

623 Massachusetts Street, Suite 200
Lawrence, KS 66044

Licensee's Certificate of Authority Number:

Phone Number: 785.842.6464

Lee's Summit Medical Center

Hybrid OR Addition
2100 SE Blue Parkway
Lee's Summit, MO 64063

Date	03/23/20
Job Number	3-19058
Drawn By	JBR
Checked By	DLW

Revision

Number	Date	Description

S4.1

© 2019 ACI/BOLAND, Inc

FOUNDATION DETAILS

3/23/2020 3:14:31 PM

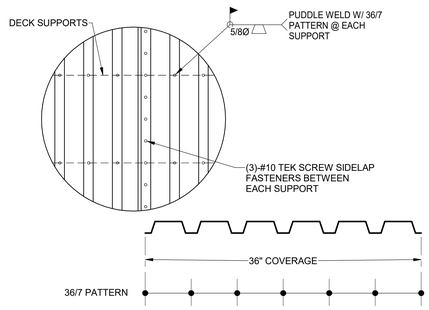

1 1 1/2" ROOF DECK ATTACHMENT
NO SCALE

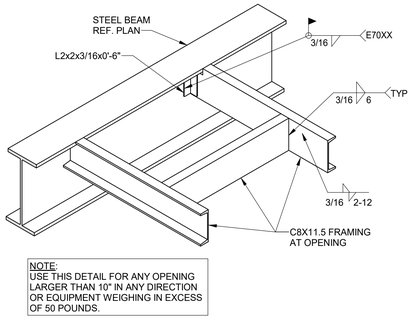

2 TYPICAL FLOOR OPENING DETAIL
3/4" = 1'-0"

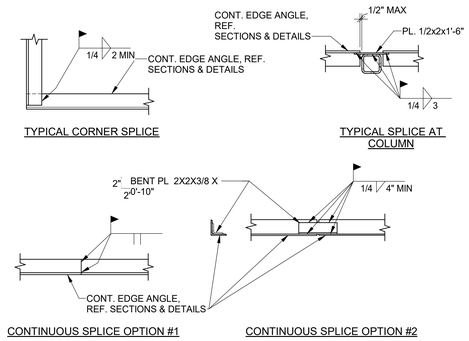

3 TYPICAL EDGE ANGLE SPLICE
NO SCALE

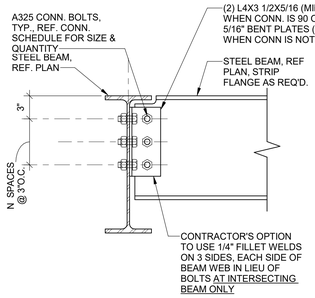

BEAM CONNECTION SCHEDULE

BEAM DEPTH	NUMBER OF BOLT LINES	BOLT DIAMETER U.N.O.	CAPACITY ASD / LRFD
W8	2	3/4" DIA.	21k / 31k
W10			
W12	3	3/4" DIA.	31k / 47k
W14			
W16			
W18	4	3/4" DIA.	42k / 63k
W21	5	3/4" DIA.	53k / 79k
W24	6	3/4" DIA.	63k / 95k
W27	7	3/4" DIA.	74k / 111k
W30	8	3/4" DIA.	84k / 129k
W33	9	3/4" DIA.	95k / 145k

NOTE:
AT CONTRACTORS OPTION, BOLTED CONNECTIONS TO BEAM WEBS MAY BE USED FOR CONSTRUCTABILITY.

4 DOUBLE ANGLE CONNECTION
NO SCALE

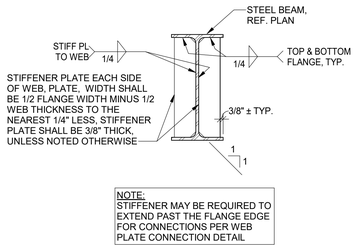

5 WEB STIFFENER DETAIL
NO SCALE

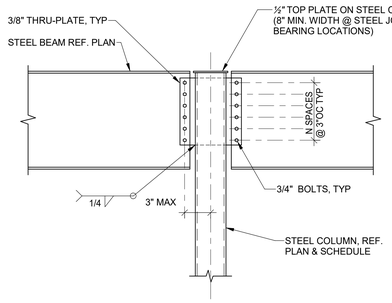

BEAM TO HSS COLUMN CONNECTION SCHEDULE

BEAM DEPTH	NUMBER OF BOLT LINES (N)	CAPACITY (ASD)
W8	2	15k
W10		
W12	3	22k
W14		
W16	4	30k
W18		
W21	5	37k
W24	6	45k

NOTE: BOLTS ARE ASTM A325N.

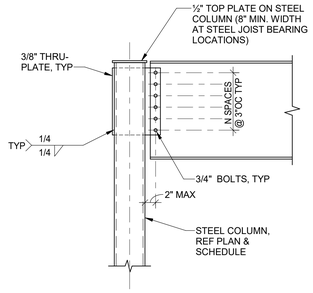

6 BEAM TO HSS COLUMN CONNECTION
3/4" = 1'-0"

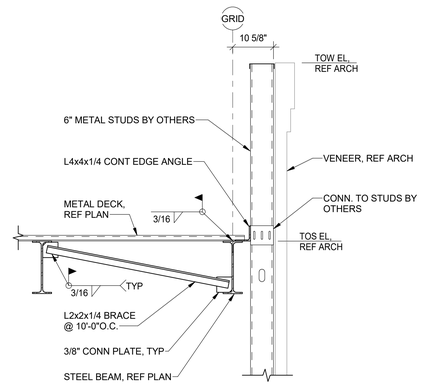

7 FRAMING SECTION
3/4" = 1'-0"

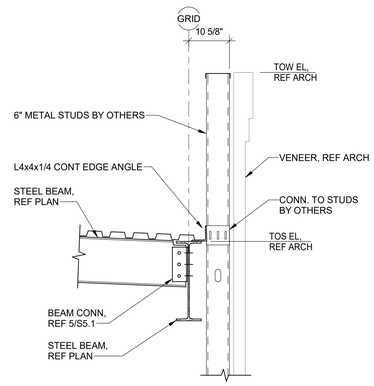

8 FRAMING SECTION
3/4" = 1'-0"

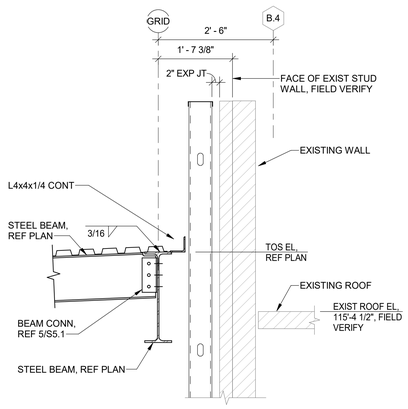

9 FRAMING SECTION AT EXISTING
3/4" = 1'-0"

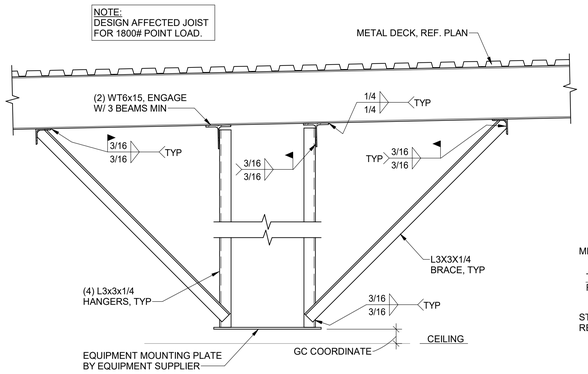

10 LIGHT BOOM FRAMING SECTION
3/4" = 1'-0"

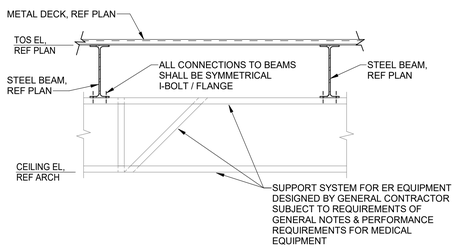

11 EQUIPMENT HANGER DETAIL
3/4" = 1'-0"

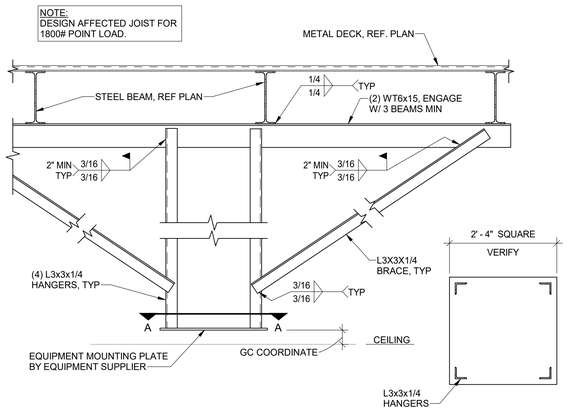

12 EQUIPMENT HANGER DETAIL
3/4" = 1'-0"

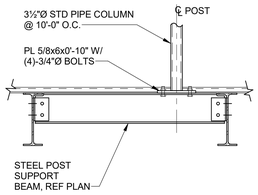

13 SCREEN WALL POST SECTION
3/4" = 1'-0"

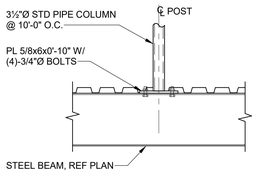

14 SCREEN WALL POST SECTION
3/4" = 1'-0"

DANIEL L. WETHINGTON
NUMBER
E-1999137726
03-23-2020
PROFESSIONAL ENGINEER

ACI BOLAND ARCHITECTS
1710 Wyandotte
Kansas City, MO 64108
T: 816.763.9600

ACI/Boland, Inc.
Kansas City | St. Louis
Licensee's Certificate of Authority Number:

STRUCTURAL, MECHANICAL, ELECTRICAL, & PLUMBING CONSULTANT

Professional Engineering Consultants, P.A.

623 Massachusetts Street, Suite 200
Lawrence, KS 66044

Licensee's Certificate of Authority Number:

Phone Number: 785.842.6464

Lee's Summit Medical Center

Hybrid OR Addition
2100 SE Blue Parkway
Lee's Summit, MO 64063

Date	03/23/20
Job Number	3-19058
Drawn By	JBR
Checked By	DLW

Revision

Number	Date	Description

S5.1

© 2019 ACI/BOLAND, Inc

FRAMING DETAILS

BIM 360://190711-000 - Lee's Summit Med Cntr Hybrid OR Addn/190711-000-STRUCT-R19.rvt

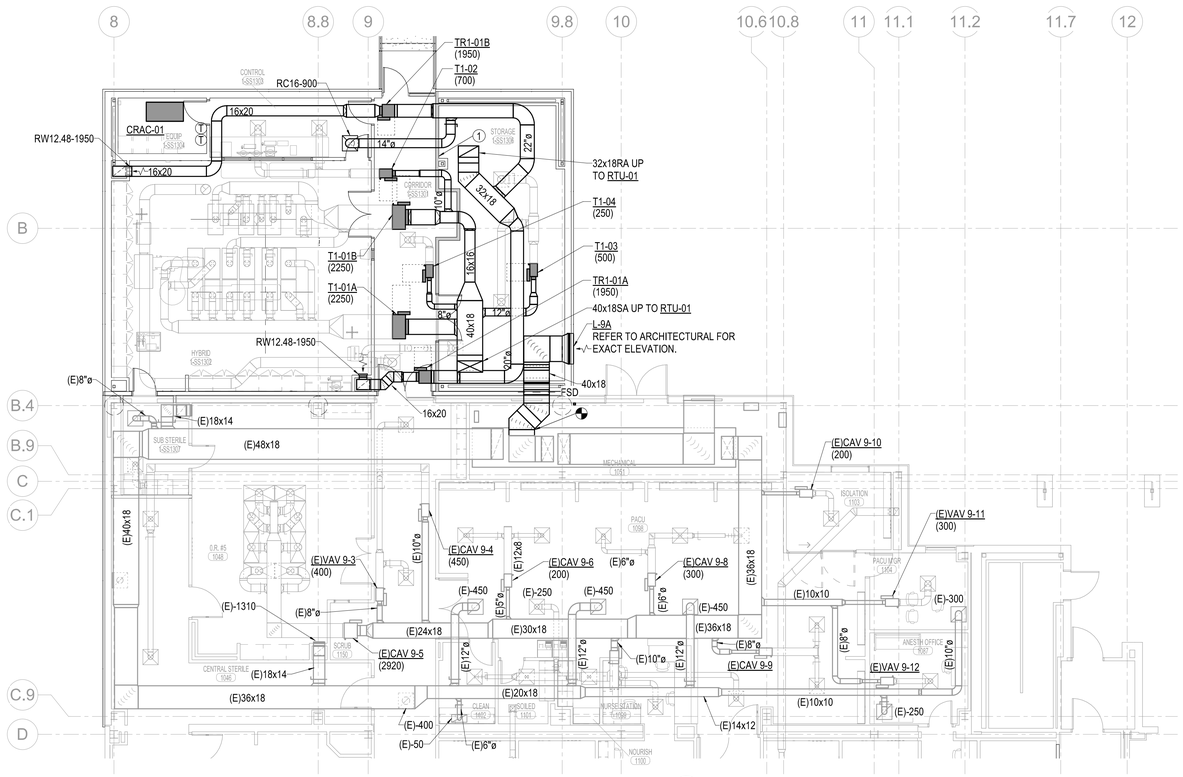

1 HVAC MV/RA FLOOR PLAN
1/8" = 1'-0"
NORTH

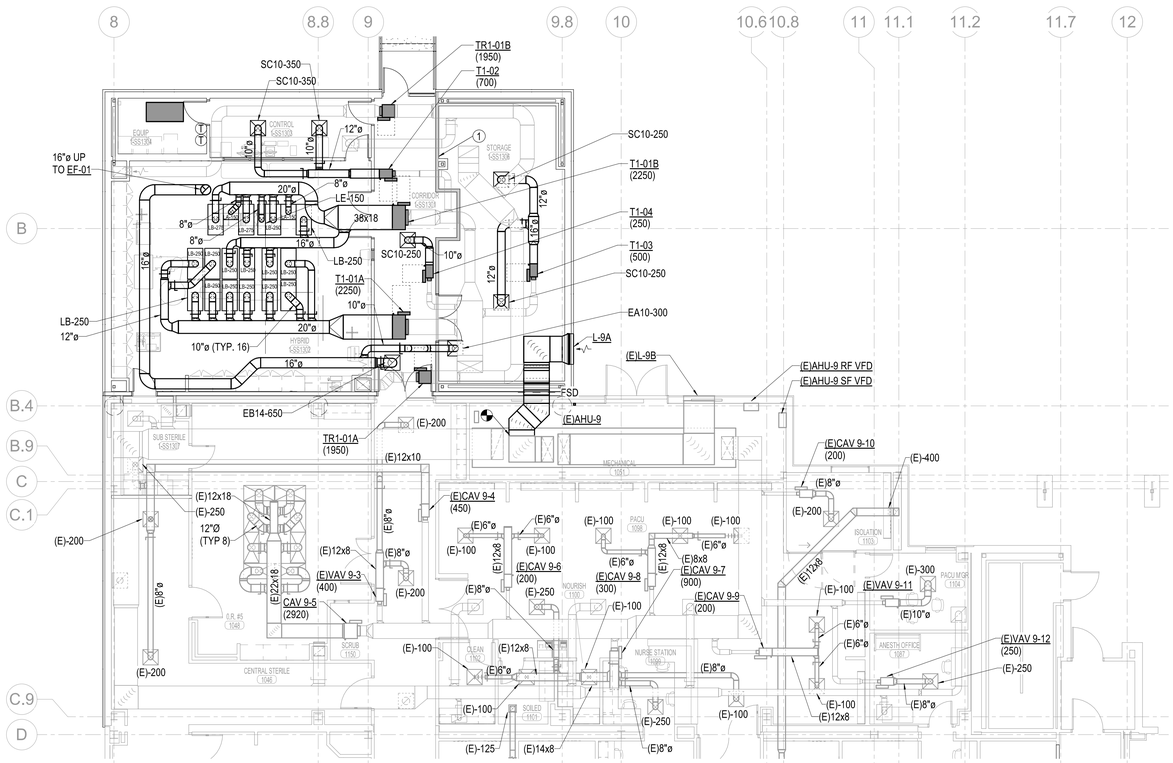

2 HVAC LV/EA FLOOR PLAN
1/8" = 1'-0"
NORTH

MECHANICAL GENERAL NOTES

1. THIS IS A LIFE SAFETY BUILDING WHICH MEANS IT SHALL REMAIN REASONABLY OPERATIONAL IN THE CASE OF A SEISMIC EVENT. THEREFORE ALL STATIONARY EQUIPMENT ON THE FLOOR OR A MEZZANINE AND ALL CONCRETE PADS SHALL BE FIXED RIGIDLY TO THE STRUCTURE. ALL ROTATING OR RECIPROCATING OR VIBRATING EQUIPMENT SHALL BE INSTALLED WITH EARTHQUAKE SNUBBERS TO LIMIT MOVEMENT. ALL HANGING EQUIPMENT,PIPING, AND DUCTWORK SHALL BE BRACED TO THE STRUCTURE. REFER TO SPECIFICATION SECTION 21 0548,AND 23 0548.
2. FIELD VERIFY ALL EXISTING CONDITIONS PRIOR TO BEGINNING WORK. BRING ANY DISCREPANCIES FROM THE DRAWINGS AND NOTES TO THE OWNER'S REPRESENTATIVE IMMEDIATELY. MINOR CHANGES IN THE SCOPE OF THE DEMOLITION WORK SHALL NOT JUSTIFY AN ADDITIONAL COST.
3. CONTRACTOR SHALL PROVIDE PROTECTIVE PLASTIC DROP CLOTHS TO PROTECT THE EXISTING OCCUPIED AREAS AND EQUIPMENT FROM DUST AND DEBRIS DURING THE CONSTRUCTION WORK AND SHALL CLEAN THE AREAS OF ALL CONSTRUCTION DIRT DAILY, AND UPON COMPLETION OF THE WORK.
4. ALL DRAINED PIPING RISERS AND MAINS SHALL BE REFILLED WITH FLUID AND PROPERLY VENTED BY THIS CONTRACTOR, ONCE NEW WORK HAS BEEN INSTALLED.
5. COORDINATE WITH THE OWNER THE REMOVAL AND REPLACEMENT OF ALL EXISTING CEILINGS, WALL, ETC. AS REQUIRED FOR MECHANICAL DEMOLITION WORK.
6. ALL CUTTING AND CHANNELING OF EXISTING NON-STRUCTURAL ELEMENTS SHALL BE ACCOMPLISHED IN A NEAT AND WORKMANLIKE MANNER WITHOUT REMOVAL OF EXCESS MATERIALS. THIS CONTRACTOR SHALL PATCH AND REPLACE WITH MATERIAL SIMILAR TO ADJACENT CONSTRUCTION.
7. CUTTING OF STRUCTURAL MEMBERS IS NOT ALLOWED.
8. THIS CONTRACTOR SHALL GIVE FULL COOPERATION TO THE OWNER IN THE SCHEDULING AND PROCEDURE OF WORK AND SHALL TAKE EVERY PRECAUTION TO PREVENT DAMAGE FROM FREEZING TO EXISTING SYSTEMS.
9. RELOCATE EXISTING DUCTWORK, PIPING, ELECTRICAL CONDUITS, AND CABLING AS NECESSARY TO ACCOMPLISH FINAL INSTALLATION AS SHOWN.
10. CAP ALL EXISTING DUCTWORK SHOWN TO BE DISCONNECTED AND NOT RE-USED AT MAINS. ALL ACCESSIBLE ABANDONED PIPING SHALL BE REMOVED.
11. COORDINATE ROUTINGS OF PLUMBING AND HVAC PIPING WITH DUCTWORK, LIGHTS, ARCHITECTURAL CEILING AND STRUCTURAL ELEMENTS. PIPING SHALL RISE AND DROP, JOG OR OFFSET, AS REQUIRED TO AVOID CONFLICTS. DUCTWORK SHALL TAKE PRECEDENCE OVER ALL PIPING, EXCEPT WHERE GRADE MUST BE MAINTAINED FOR DRAINAGE.
12. ANY EXPENSES RISING FROM LACK OF COORDINATION SHALL BE AT CONTRACTOR'S EXPENSE. ALL DUCT AND PIPE ELEVATIONS SHOWN IN PARENTHESIS ARE BOTTOM OF DUCT OR PIPE UNLESS INDICATED OTHERWISE ON PLANS.
13. ALL SUPPLY, RETURN, AND EXHAUST BRANCHES TO GRILLES, REGISTERS, AND DIFFUSERS SHALL HAVE A MANUAL BALANCE DAMPER.
14. COORDINATE EXACT LOCATION OF DIFFUSER/GRILLES AND ROUTING OF DUCTWORK WITH LIGHTS,PIPING,STRUCTURE AND ARCHITECTURAL CEILINGS. REFER TO ELECTRICAL DRAWINGS FOR EXACT CEILING GRID/LIGHTING LAYOUT.
15. PLANS ARE SCHEMATIC IN NATURE. LAYOUT IS BASED ON BEST AVAILABLE INFORMATION. CONTRACTOR SHALL FIELD VERIFY EXISTING CONDITIONS AND DIMENSIONS.
16. DO NOT ROUTE PIPING OR DUCTWORK OVER ELECTRICAL PANELS.
17. ALL WORK SHALL COMPLY WITH THE LATEST ADOPTED LOCAL,STATE,AND FEDERAL CODES AND REGULATIONS.
18. ALL DIFFUSERS ARE 4-WAY BLOW UNLESS OTHERWISE INDICATED ON PLANS.
19. PROVIDE ACCESS DOORS TO DAMPERS, TERMINAL UNITS, HUMIDIFIERS AND OTHER EQUIPMENT INSTALLED ABOVE HARD CEILING.
20. IT IS ASSUMED THAT MOST OF THE RETURN AIR AND EXHAUST AIR MAINS ARE MOUNTED HIGH ABOVE THE CEILING. BALANCE DAMPERS IN THE BRANCH DUCTS FROM THESE MAINS SHALL BE IN THE VERTICAL RISE OF BRANCH NO MORE 48"(WHERE POSSIBLE)ABOVE THE GRILLES AND REGISTERS (SO BALANCE TECHNICIANS CAN EASILY ACCESS THEM THROUGH THE CEILING).
21. ALL BRANCH SA,RA AND EA DUCTS SHALL HAVE A MANUAL BALANCED DAMPER WHETHER SHOWN OR NOT.
22. MAINTAIN 25'-0" MINIMUM IN ANY DIRECTION FROM OUTDOOR AIR INTAKES ANY EXHAUST FAN, PLUMBING VENT, DRIVE, ALLEY OR LOADING DOCK.
23. OUTDOOR AIR INTAKES SHALL BE MINIMUM 3'-0" ABOVE ROOF. ADJUST ROOF CURB SELECTIONS ACCORDINGLY.
24. EQUIPMENT THAT REQUIRES MAINTENANCE SHALL NOT BE WITHIN 10' OF THE BUILDING EDGE.
25. ALL DUCTWORK PENETRATING WALLS OF INCIDENTAL USE SPACES SHALL COMPLY WITH REQUIREMENTS OF (2018) IBC SECTION 717.5.2 EXCEPTION 3.

PLAN NOTES

1. FIRE BARRIER. REFER TO GENERAL NOTE 25. REFER TO ARCHITECTURAL LIFE SAFETY PLAN FOR ADDITIONAL INFORMATION.

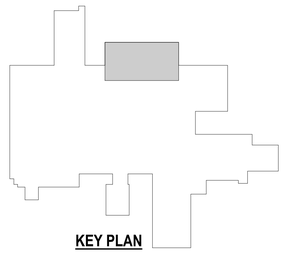

KEY PLAN

STATE OF MISSOURI
BRANDON W. CLASSEN
NUMBER PE-2019000019
2020-03-23
PROFESSIONAL ENGINEER

ACI BOLAND ARCHITECTS
1710 Wyandotte
Kansas City, MO 64108
T: 816.763.9600

ACI/Boland, Inc.
Kansas City | St. Louis
Licensee's Certificate of Authority Number:

STRUCTURAL, MECHANICAL, ELECTRICAL, & PLUMBING CONSULTANT

PEC
Professional Engineering Consultants, P.A.
623 Massachusetts Street, Suite 200
Lawrence, KS 66044
State Certificate of Authority: #000465F
Phone Number: 785.842.6464

Lee's Summit Medical Center

Hybrid OR Addition
2100 SE Blue Parkway
Lee's Summit, MO 64063

Date	3-23-2020
Job Number	3-19058
Drawn By	DBB
Checked By	SPH

Revision

Number	Date	Description

M1.0

© 2020 ACI/BOLAND, Inc

HVAC FLOOR PLANS

3/23/2020 10:48:59 AM
BIM 360://190711-000 - Lee's Summit Med Cntr Hybrid OR Addn/190711-000-MASTER MECH-R19.rvt

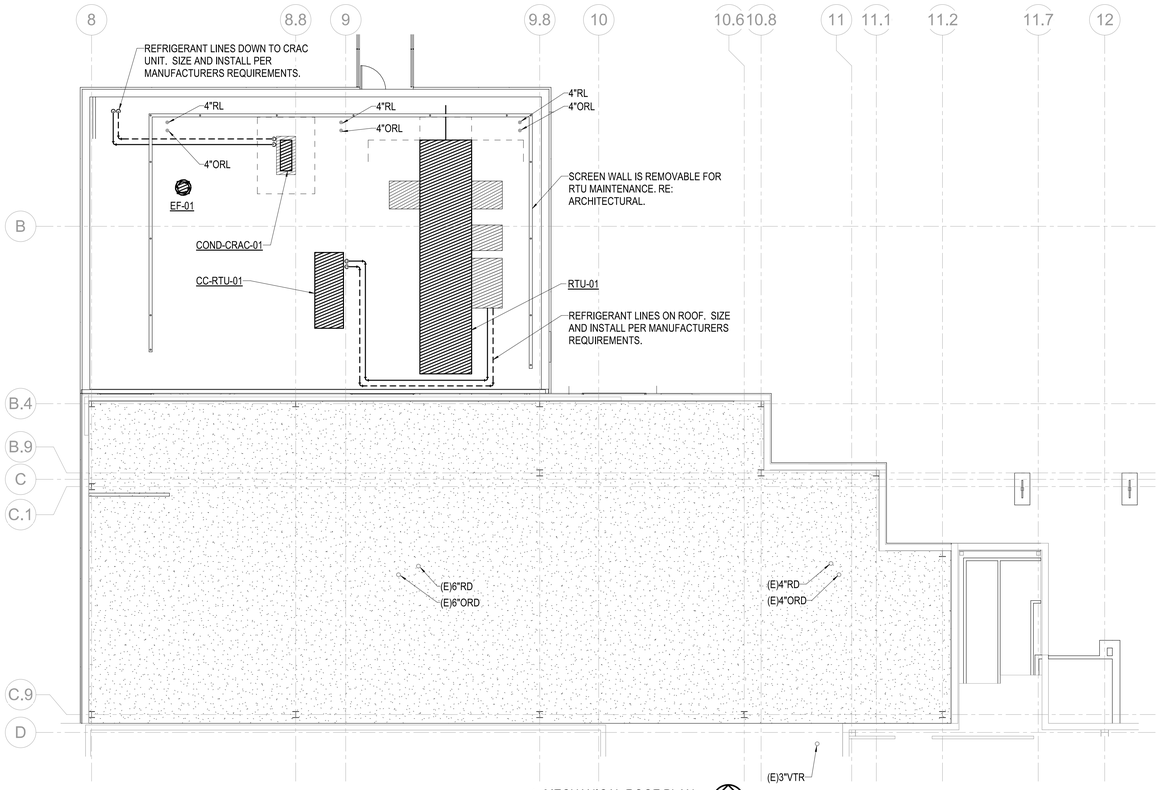

1 MECHANICAL ROOF PLAN
1/8" = 1'-0"
NORTH

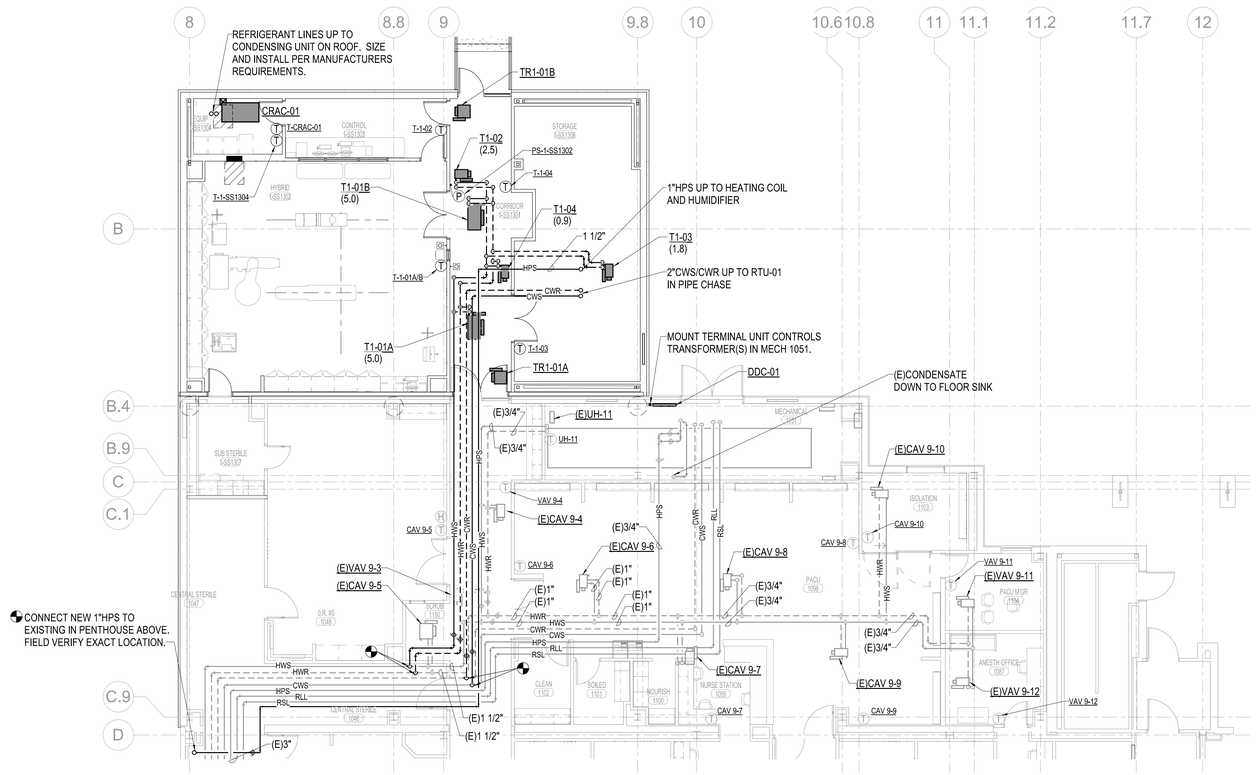

2 HYDRONICS FLOOR PLAN
1/8" = 1'-0"
NORTH

MECHANICAL GENERAL NOTES

1. THIS IS A LIFE SAFETY BUILDING WHICH MEANS IT SHALL REMAIN REASONABLY OPERATIONAL IN THE CASE OF A SEISMIC EVENT. THEREFORE ALL STATIONARY EQUIPMENT ON THE FLOOR OR A MEZZANINE AND ALL CONCRETE PADS SHALL BE FIXED RIGIDLY TO THE STRUCTURE. ALL ROTATING OR RECIPROCATING OR VIBRATING EQUIPMENT SHALL BE INSTALLED WITH EARTHQUAKE SNUBBERS TO LIMIT MOVEMENT. ALL HANGING EQUIPMENT,PIPING, AND DUCTWORK SHALL BE BRACED TO THE STRUCTURE. REFER TO SPECIFICATION SECTION 21 0548,AND 23 0548.
2. FIELD VERIFY ALL EXISTING CONDITIONS PRIOR TO BEGINNING WORK. BRING ANY DISCREPANCIES FROM THE DRAWINGS AND NOTES TO THE OWNER'S REPRESENTATIVE IMMEDIATELY. MINOR CHANGES IN THE SCOPE OF THE DEMOLITION WORK SHALL NOT JUSTIFY AN ADDITIONAL COST.
3. CONTRACTOR SHALL PROVIDE PROTECTIVE PLASTIC DROP CLOTHS TO PROTECT THE EXISTING OCCUPIED AREAS AND EQUIPMENT FROM DUST AND DEBRIS DURING THE CONSTRUCTION WORK AND SHALL CLEAN THE AREAS OF ALL CONSTRUCTION DIRT DAILY, AND UPON COMPLETION OF THE WORK.
4. ALL DRAINED PIPING RISERS AND MAINS SHALL BE REFILLED WITH FLUID AND PROPERLY VENTED BY THIS CONTRACTOR, ONCE NEW WORK HAS BEEN INSTALLED.
5. COORDINATE WITH THE OWNER THE REMOVAL AND REPLACEMENT OF ALL EXISTING CEILINGS, WALL, ETC. AS REQUIRED FOR MECHANICAL DEMOLITION WORK.
6. ALL CUTTING AND CHANNELING OF EXISTING NON-STRUCTURAL ELEMENTS SHALL BE ACCOMPLISHED IN A NEAT AND WORKMANLIKE MANNER WITHOUT REMOVAL OF EXCESS MATERIALS. THIS CONTRACTOR SHALL PATCH AND REPLACE WITH MATERIAL SIMILAR TO ADJACENT CONSTRUCTION.
7. CUTTING OF STRUCTURAL MEMBERS IS NOT ALLOWED.
8. THIS CONTRACTOR SHALL GIVE FULL COOPERATION TO THE OWNER IN THE SCHEDULING AND PROCEDURE OF WORK AND SHALL TAKE EVERY PRECAUTION TO PREVENT DAMAGE FROM FREEZING TO EXISTING SYSTEMS.
9. RELOCATE EXISTING DUCTWORK, PIPING, ELECTRICAL CONDUITS, AND CABLING AS NECESSARY TO ACCOMPLISH FINAL INSTALLATION AS SHOWN.
10. CAP ALL EXISTING DUCTWORK SHOWN TO BE DISCONNECTED AND NOT RE-USED AT MAINS. ALL ACCESSIBLE ABANDONED PIPING SHALL BE REMOVED.
11. COORDINATE ROUTING OF PLUMBING AND HVAC PIPING WITH DUCTWORK, LIGHTS, ARCHITECTURAL CEILING AND STRUCTURAL ELEMENTS. PIPING SHALL RISE AND DROP, JOG OR OFFSET, AS REQUIRED TO AVOID CONFLICTS. DUCTWORK SHALL TAKE PRECEDENCE OVER ALL PIPING, EXCEPT WHERE GRADE MUST BE MAINTAINED FOR DRAINAGE.
12. ANY EXPENSES RISING FROM LACK OF COORDINATION SHALL BE AT CONTRACTOR'S EXPENSE. ALL DUCT AND PIPE ELEVATIONS SHOWN IN PARENTHESIS ARE BOTTOM OF DUCT OR PIPE UNLESS INDICATED OTHERWISE ON PLANS.
13. ALL SUPPLY, RETURN, AND EXHAUST BRANCHES TO GRILLES, REGISTERS, AND DIFFUSERS SHALL HAVE A MANUAL BALANCE DAMPER.
14. COORDINATE EXACT LOCATION OF DIFFUSER/GRILLES AND ROUTING OF DUCTWORK WITH LIGHTS,PIPING,STRUCTURE AND ARCHITECTURAL CEILINGS. REFER TO ELECTRICAL DRAWINGS FOR EXACT CEILING GRID/LIGHTING LAYOUT.
15. PLANS ARE SCHEMATIC IN NATURE. LAYOUT IS BASED ON BEST AVAILABLE INFORMATION. CONTRACTOR SHALL FIELD VERIFY EXISTING CONDITIONS AND DIMENSIONS.
16. DO NOT ROUTE PIPING OR DUCTWORK OVER ELECTRICAL PANELS.
17. ALL WORK SHALL COMPLY WITH THE LATEST ADOPTED LOCAL,STATE,AND FEDERAL CODES AND REGULATIONS.
18. ALL DIFFUSERS ARE 4-WAY BLOW UNLESS OTHERWISE INDICATED ON PLANS.
19. PROVIDE ACCESS DOORS TO DAMPERS, TERMINAL UNITS, HUMIDIFIERS AND OTHER EQUIPMENT INSTALLED ABOVE HARD CEILING.
20. IT IS ASSUMED THAT MOST OF THE RETURN AIR AND EXHAUST AIR MAINS ARE MOUNTED HIGH ABOVE THE CEILING. BALANCE DAMPERS IN THE BRANCH DUCTS FROM THESE MAINS SHALL BE IN THE VERTICAL RISE OF BRANCH NO MORE 48"(WHERE POSSIBLE)ABOVE THE GRILLES AND REGISTERS (SO BALANCE TECHNICIANS CAN EASILY ACCESS THEM THROUGH THE CEILING).
21. ALL BRANCH SA,RA AND EA DUCTS SHALL HAVE A MANUAL BALANCED DAMPER WHETHER SHOWN OR NOT.
22. MAINTAIN 25'-0" MINIMUM IN ANY DIRECTION FROM OUTDOOR AIR INTAKES ANY EXHAUST FAN, PLUMBING VENT, DRIVE, ALLEY OR LOADING DOCK.
23. OUTDOOR AIR INTAKES SHALL BE MINIMUM 3'-0" ABOVE ROOF. ADJUST ROOF CURB SELECTIONS ACCORDINGLY.
24. EQUIPMENT THAT REQUIRES MAINTENANCE SHALL NOT BE WITHIN 10' OF THE BUILDING EDGE.
25. ALL DUCTWORK PENETRATING WALLS OF INCIDENTAL USE SPACES SHALL COMPLY WITH REQUIREMENTS OF (2018) IBC SECTION 717.5.2 EXCEPTION 3.

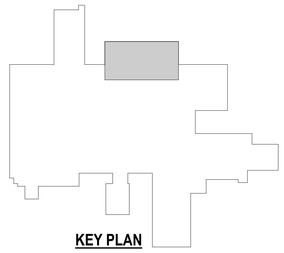

KEY PLAN

STATE OF MISSOURI
BRANDON W. GLASSEN
NUMBER
PE-2019000019
2020-03-23
PROFESSIONAL ENGINEER

ACI BOLAND ARCHITECTS
1710 Wyandotte
Kansas City, MO 64108
T: 816.763.9600

ACI/Boland, Inc.
Kansas City | St. Louis
Licensee's Certificate of Authority Number:

STRUCTURAL, MECHANICAL, ELECTRICAL, & PLUMBING CONSULTANT

PEC
Professional Engineering Consultants, P.A.
623 Massachusetts Street, Suite 200
Lawrence, KS 66044
State Certificate of Authority: #000465F
Phone Number: 785.842.6464

Lee's Summit Medical Center

Hybrid OR Addition
2100 SE Blue Parkway
Lee's Summit, MO 64063

Date	3-23-2020
Job Number	3-19058
Drawn By	DBB
Checked By	SPH

Revision

Number	Date	Description

M2.0

© 2020 ACI/BOLAND, Inc

MECHANICAL HYDRONICS & ROOF PLAN

3/23/2020 10:49:05 AM
BIM 360://190711-000 - Lee's Summit Med Cntr Hybrid OR Addn/190711-000-MASTER MECH-R19.rvt

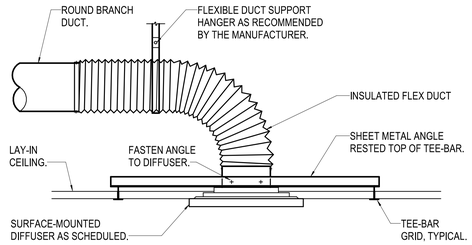

1 DIFFUSER - SURFACE-MOUNTED IN LAY-IN CEILING DETAIL
NO SCALE

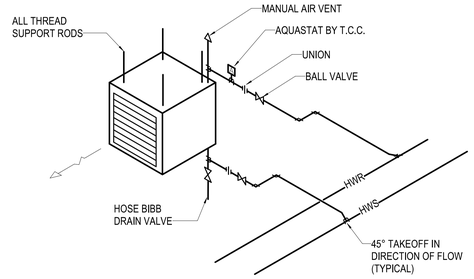

2 UNIT HEATER PIPING DETAIL - HOT WATER
NO SCALE

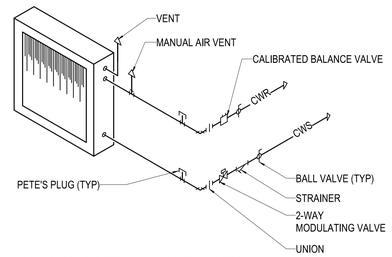

3 COIL PIPING DETAIL - CHILLED WATER
NO SCALE

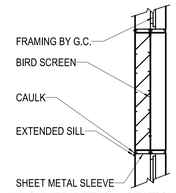

4 LOUVER DETAIL - STATIONARY
NO SCALE

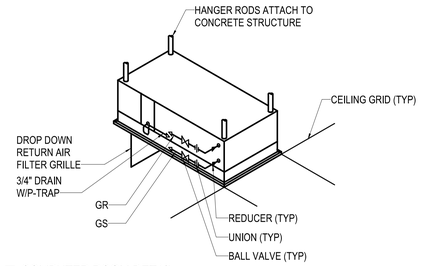

5 COMPUTER ROOM DETAIL
NO SCALE

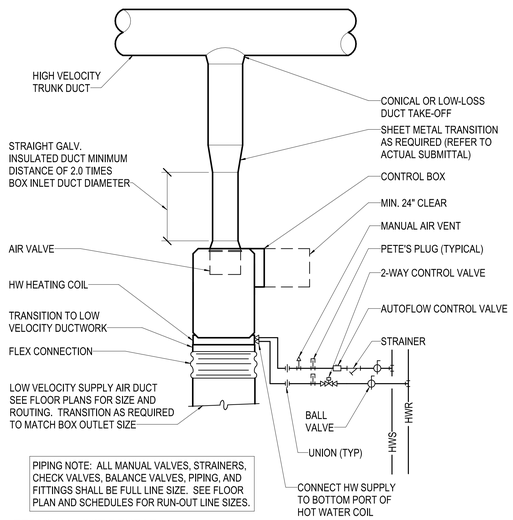

6 TERMINAL UNIT REHEAT
NO SCALE

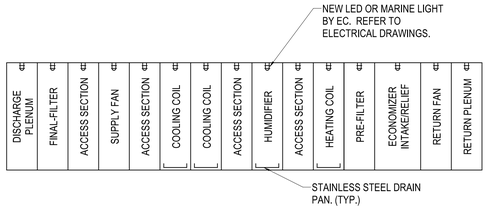

7 RTU UNIT CONFIGURATION
NO SCALE

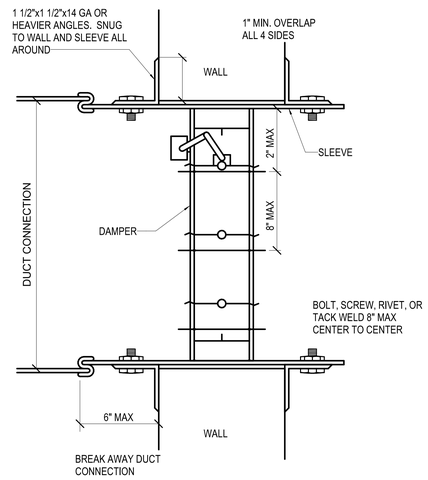

VERTICAL INSTALLATION

NOTES:
1. OPENINGS IN FLOOR OR WALL SHALL BE 1/4" TO 1/2" LARGER THAN OVERALL SIZE OF FIRE DAMPER AND SLEEVE ASSEMBLY.
2. ALL CONNECTIONS TO DUCTS SHALL CONFORM TO U.L. 555 AND NFPA 90-A.
3. MOUNTING ANGLES SHALL BE MIN. OF 1 1/2" X 1 1/2" X 14 GA. AND BOLTED, TACK WELDED, RIVETED, OR SCREWED TO SLEEVE AT MAX. SPACING OF 12" AND MIN. OF 2 CONNECTIONS PER SIDE, TOP, AND BOTTOM. MOUNTING ANGLES SHALL OVERLAP WALL AND FLOOR OPENING MIN. OF 1" ON ALL SIDES.
4. DAMPER SHALL BE ATTACHED TO SLEEVE IN SAME MANNER AND SPACING AS MOUNTING ANGLES.
5. THE LENGTH OF THE SLEEVE EXTENDING BEYOND THE WALL OR FLOOR OPENING SHALL NOT EXCEED 6" ON EACH SIDE.
6. DAMPER INSTALLATION SHALL BE IN ACCORDANCE WITH MANUFACTURER'S INSTRUCTIONS AND SHALL CONFORM TO NFPA 90-A AND UL 555.
7. HARDCAST ALL FRAMES PRIOR TO INSTALLATION.

8 DAMPER INSTALLATION DETAIL - FIRE/SMOKE
NO SCALE

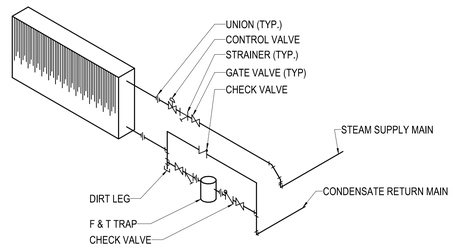

9 COIL PIPING DETAIL - STEAM HEATING
NO SCALE

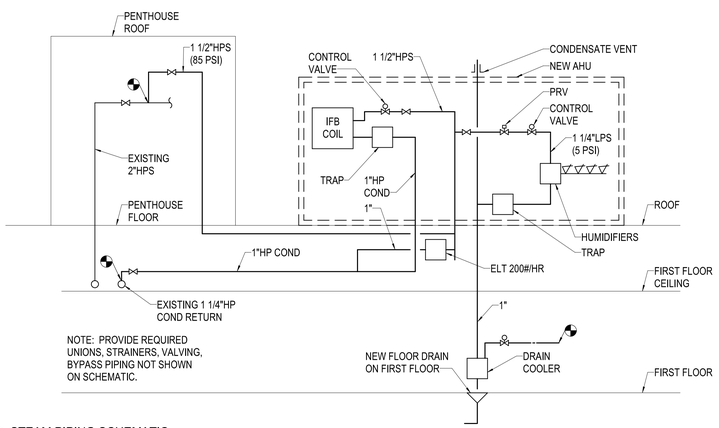

10 STEAM PIPING SCHEMATIC
NO SCALE

STATE OF MISSOURI
BRANDON W. CLASSEN
NUMBER PE-2019000019
2020-03-23
PROFESSIONAL ENGINEER

ACI BOLAND ARCHITECTS
1710 Wyandotte
Kansas City, MO 64108
T: 816.763.9600

ACI/Boland, Inc.
Kansas City | St. Louis
Licensee's Certificate of Authority Number:

STRUCTURAL, MECHANICAL, ELECTRICAL, & PLUMBING CONSULTANT

PEC
Professional Engineering Consultants, P.A.
623 Massachusetts Street, Suite 200
Lawrence, KS 66044
State Certificate of Authority: #000465F
Phone Number: 785.842.6464

Lee's Summit Medical Center

Hybrid OR Addition
2100 SE Blue Parkway
Lee's Summit, MO 64063

Date	3-23-2020
Job Number	3-19058
Drawn By	DBB
Checked By	SPH

Revision

Number	Date	Description

M3.0

© 2020 ACI/BOLAND, Inc

MECHANICAL DETAILS

3/23/2020 10:49:07 AM

BIM 360://190711-000 - Lee's Summit Med Cntr Hybrid OR Addn/190711-000-MASTER MECH-R19.rvt

3/23/2020 10:49:08 AM

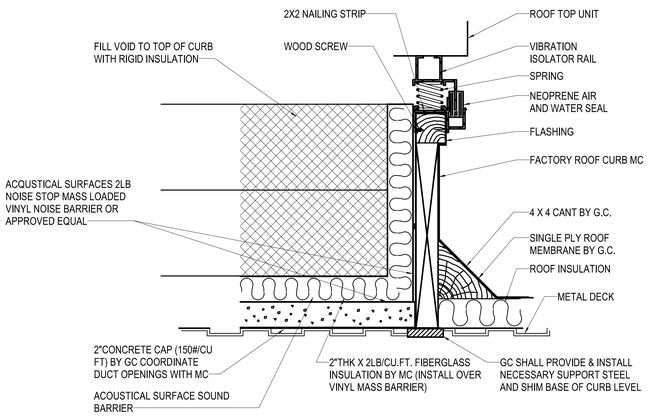

1 ROOF TOP UNIT CURB DETAIL
NO SCALE

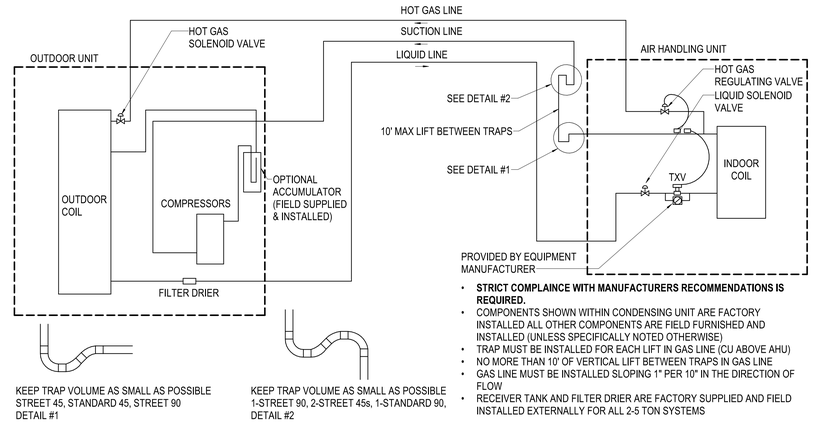

- **STRICT COMPLAINCE WITH MANUFACTURERS RECOMMENDATIONS IS REQUIRED.**
- COMPONENTS SHOWN WITHIN CONDENSING UNIT ARE FACTORY INSTALLED ALL OTHER COMPONENTS ARE FIELD FURNISHED AND INSTALLED (UNLESS SPECIFICALLY NOTED OTHERWISE)
- TRAP MUST BE INSTALLED FOR EACH LIFT IN GAS LINE (CU ABOVE AHU)
- NO MORE THAN 10' OF VERTICAL LIFT BETWEEN TRAPS IN GAS LINE
- GAS LINE MUST BE INSTALLED SLOPING 1" PER 10" IN THE DIRECTION OF FLOW
- RECEIVER TANK AND FILTER DRIER ARE FACTORY SUPPLIED AND FIELD INSTALLED EXTERNALLY FOR ALL 2-5 TON SYSTEMS

2 REFRIGERATION PIPING SCHEMATIC
NO SCALE

NOTES:
1. CONFIRM FINAL INSTALLATION REQUIREMENTS WITH MANUFACTURER.
2. PIPING ROUTING AND COORDINATION DRAWINGS SHALL BE SUBMITTED AND APPROVED PRIOR TO BEGINNING WORK.
3. PIPING INSTALLATION SHALL BE INSPECTED BY MANUFACTURERS FACTORY TECHNICIAN.
4. PURGE LINES WITH DRY NITROGEN PRIOR TO BRAZING.
5. INSTALLATION PROCEDURES SHALL BE SUBMITTED PRIOR TO BEGINNING WORK.
6. CLEANING PROCEDURES SHALL BE SUBMITTED PRIOR TO BEGINNING WORK.
7. SUBMIT FINAL AS-BUILT DRAWINGS.
8. PROVIDE START-UP BY MANUFACTURERS FACTORY TECHNICIAN.

UNLESS OTHERWISE INDICATED COMPONENTS INDICATED MAY BE LOCATED AT CONDENSING UNIT.

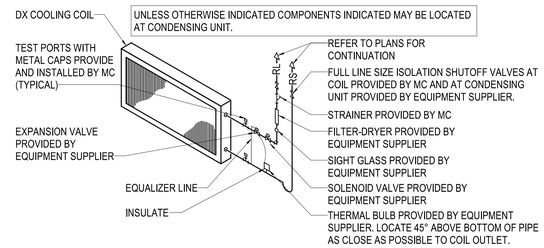

3 COIL PIPING DETAIL - DX COIL PIPING DIAGRAM
NO SCALE

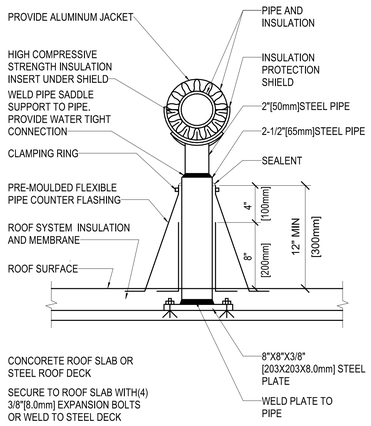

NOTES :
PROVIDE RESTRAINING CLAMPS 8'-0"[2438] O.C.

4 ROOF MOUNTED PIPE SUPPORT - (VA STANDARD)
NO SCALE

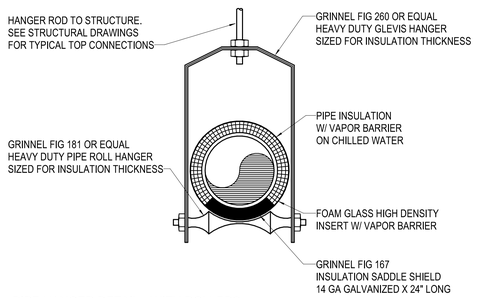

6 PIPE HANGER DETAIL - WITH ROLLERS
NO SCALE

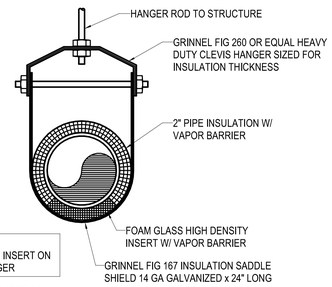

NOTE:
OMIT FOAM GLASS INSERT ON PIPES 3" AND LARGER

7 PIPE HANGER DETAIL
NO SCALE

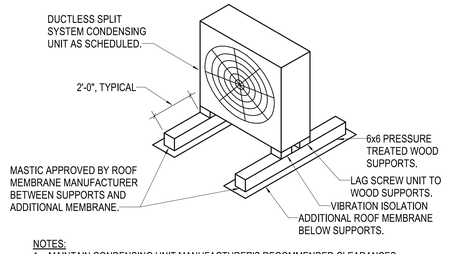

NOTES:
1. MAINTAIN CONDENSING UNIT MANUFACTURER'S RECOMMENDED CLEARANCES.
2. MAINTAIN ROOF DRAINAGE AROUND WOOD SUPPORTS.
3. PROVIDE PRESSURE TREATED WOOD SHIMS AT VIBRATION ISOLATION PADS, OR TAPER 6x6 SUPPORTS, FOR LEVEL CONDENSING UNIT INSTALLATION.

8 CONDENSING UNIT DETAIL - DUCTLESS SPLIT
NO SCALE

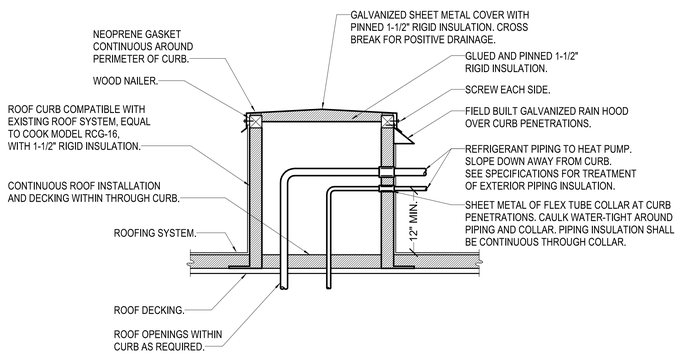

NOTE: UTILITY BOX SHALL BE UTILIZED FOR POWER FEEDERS TO HEAT PUMP ALSO. INSTALLATION OF CONDUIT SHALL BE SIMILAR TO REFRIGERANT PIPING. COORDINATE INSTALLATION WITH THE ELECTRICAL CONTRACTOR.

9 ROOF UTILITY BOX DETAIL
NO SCALE

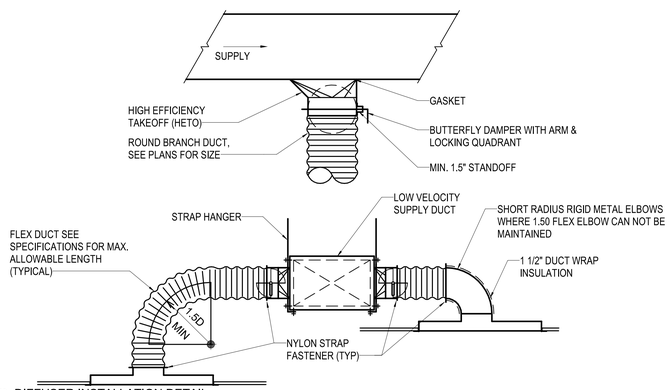

10 DIFFUSER INSTALLATION DETAIL
NO SCALE

STATE OF MISSOURI
BRANDON W. CLASSEN
NUMBER PE-2019000019
2020-03-23
PROFESSIONAL ENGINEER

ACI BOLAND ARCHITECTS
1710 Wyandotte
Kansas City, MO 64108
T: 816.763.9600

ACI/Boland, Inc.
Kansas City | St. Louis
Licensee's Certificate of Authority Number:

STRUCTURAL, MECHANICAL, ELECTRICAL, & PLUMBING CONSULTANT

PEC
Professional Engineering Consultants, P.A.
623 Massachusetts Street, Suite 200
Lawrence, KS 66044
State Certificate of Authority: #000465F
Phone Number: 785.842.6464

Lee's Summit Medical Center

Hybrid OR Addition
2100 SE Blue Parkway
Lee's Summit, MO 64063

Date	3-23-2020
Job Number	3-19058
Drawn By	Author
Checked By	Checker

Revision

Number	Date	Description

M3.1

© 2020 ACI/BOLAND, Inc

MECHANICAL DETAILS

BIM 360://190711-000 - Lee's Summit Med Cntr Hybrid OR Addn/190711-000-MASTER MECH-R19.rvt

CONTROL DEVICE SCHEDULE

MARK	DESCRIPTION	MFR	MODEL	MATCH WITH	PROVIDED BY	ROOM NAME	ROOM NUMBER	SERVED BY	ALARMS TEMPERATURE HIGH	ALARMS TEMPERATURE LOW	ALARMS PRESSURE HIGH	ALARMS PRESSURE LOW	REMARKS
PS-1-SS1302	PRESSURE MONITOR	BAS	TBD	--	TCC	HYBRID	1051.5	T1-01A/B					
T-1-01A/B	THERMOSTAT	BAS	TBD	T1-01A/B	TCC	HYBRID	1051.5	T1-01A/B					
T-1-02	THERMOSTAT	BAS	TBD	T1-02	TCC	CONTROL	1107	T1-02					
T-1-03	THERMOSTAT	BAS	TBD	T1-03	TCC	STORAGE	1051.6	T1-03					
T-1-04	THERMOSTAT	BAS	TBD	T1-04	TCC	CORRIDOR	160	T1-04					
T-1-SS1304	THERMOSTAT	BAS	TBD	--	TCC	EQUIP	1108	CRAC-01					
T-CRAC-01	THERMOSTAT	BAS	TBD	CRAC-01	TCC	EQUIP	1108	CRAC-01					

CONTROL PANEL SCHEDULE

MARK	EQUIPMENT TYPE	MANUFACTURER	MODEL	ROOM NAME	ROOM NUMBER	DESCRIPTION	ELECTRICAL VOLTS	ELECTRICAL PHASE	REMARKS
DDC-01	CONTROL PANEL	TCC	TBD	MECHANICAL	1051		120	1	DDC CONTROL PANEL
TRANSFORMER	CONTROL PANEL	TCC	TBD	MECHANICAL	1051		120	1	TERMINAL UNIT TRANSFORMER

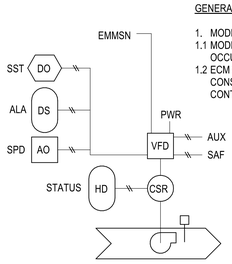

1 EXHAUST FAN - GENERAL
NO SCALE

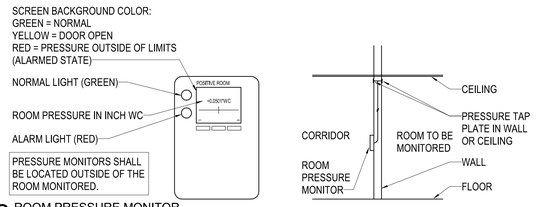

2 ROOM PRESSURE MONITOR
NO SCALE

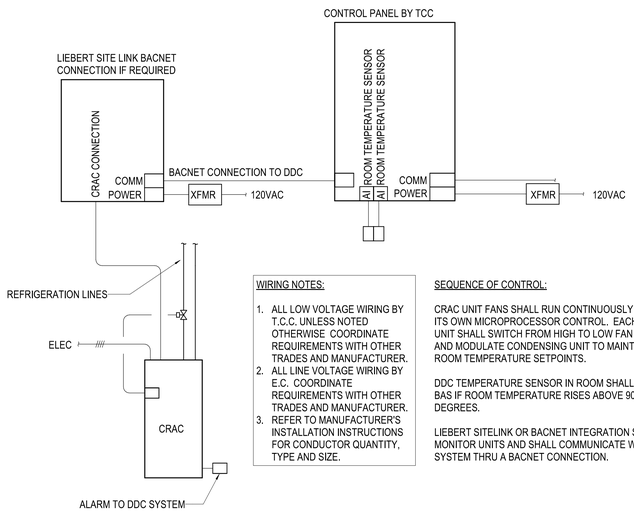

WIRING NOTES:

1. ALL LOW VOLTAGE WIRING BY T.C.C. UNLESS NOTED OTHERWISE COORDINATE REQUIREMENTS WITH OTHER TRADES AND MANUFACTURER.
2. ALL LINE VOLTAGE WIRING BY E.C. COORDINATE REQUIREMENTS WITH OTHER TRADES AND MANUFACTURER.
3. REFER TO MANUFACTURER'S INSTALLATION INSTRUCTIONS FOR CONDUCTOR QUANTITY, TYPE AND SIZE.

SEQUENCE OF CONTROL:

CRAC UNIT FANS SHALL RUN CONTINUOUSLY UNDER ITS OWN MICROPROCESSOR CONTROL. EACH CRAC UNIT SHALL SWITCH FROM HIGH TO LOW FAN SPEED, AND MODULATE CONDENSING UNIT TO MAINTAIN ROOM TEMPERATURE SETPOINTS.

DDC TEMPERATURE SENSOR IN ROOM SHALL ALARM BAS IF ROOM TEMPERATURE RISES ABOVE 90 DEGREES.

LIEBERT SITELINK OR BACNET INTEGRATION SHALL MONITOR UNITS AND SHALL COMMUNICATE WITH DDC SYSTEM THRU A BACNET CONNECTION.

3 CRAC UNIT MONITORING
NO SCALE

VAV SHUTOFF BOX (HW HEAT)

THE TERMINAL UNIT SHALL OPERATE IN A VAV COOLING/VAV HEATING MODE OF OPERATION.

OCCUPIED MODE:
THE VAV BOX WILL BE PUT INTO THE OCCUPIED MODE BY A TIME SCHEDULE IN THE BUILDING DDC SYSTEM. IN THIS MODE THE VAV DAMPER AND HOT WATER VALVE WILL MODULATE IN SEQUENCE TO MAINTAIN THE SPACE CONDITIONS AT THE OCCUPIED TEMPERATURE SETPOINTS.

ON A CALL FOR COOLING, THE VARIABLE VOLUME DAMPER WILL BE MODULATE FROM MINIMUM CFM FLOW TO MAXIMUM COOLING CFM FLOW TO MAINTAIN SPACE CONDITIONS. ON A DROP IN SPACE TEMPERATURE THE VARIABLE VOLUME DAMPER WILL BE MODULATED TO ITS MINIMUM FLOW POSITION. ON A FURTHER CALL FOR HEAT, THE PRIMARY AIR DAMPER SHALL MODULATE TOWARDS THE MAXIMUM HEATING CFM AND THE REHEAT VALVE MODULATE TO MAINTAIN SETPOINT.

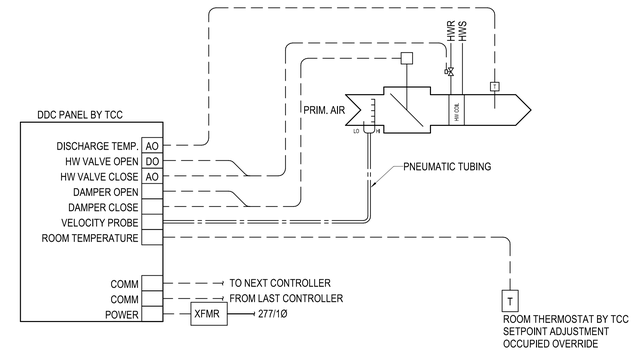

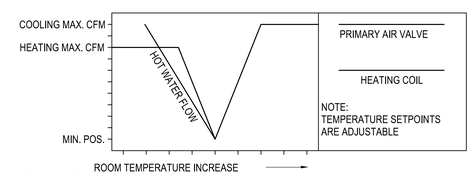

4 VAV SHUTOFF BOX WITH HOT WATER HEAT
NO SCALE

VAV SHUTOFF BOX (RETURN)

THE TERMINAL UNIT SHALL OPERATE IN A VAV MODE OF OPERATION.

OCCUPIED MODE:
THE VAV BOX WILL BE PUT INTO THE OCCUPIED MODE BY A TIME SCHEDULE IN THE BUILDING DDC SYSTEM. IN THIS MODE THE VAV DAMPER SHALL MODULATE TO MAINTAIN THE SPACE DIFFERENTIAL PRESSURE SETPOINT.

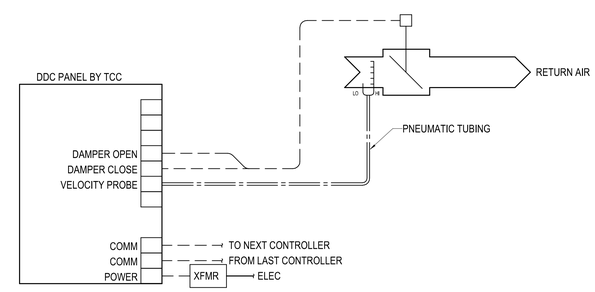

5 VAV SHUTOFF BOX - RETURN
NO SCALE

GENERAL NOTES

1. TEMPERATURE CONTROLS CONTRACTOR (TCC) SHALL FURNISH AND INSTALL ALL LOW VOLTAGE WIRING REQUIRED FOR MECHANICAL CONTROL SYSTEM. WIRING SHALL BE IN CONDUIT INSIDE WALLS, IN ROOMS WITH EXPOSED CEILINGS, AND ABOVE HARD CEILINGS. E.C. SHALL PROVIDE AND INSTALL ALL CONDUIT REQUIRED FOR MECHANICAL CONTROLS SYSTEM. LINE VOLTAGE WIRING AND ASSOCIATED CONDUIT SHALL BE PROVIDED AND INSTALLED BY E.C. CONTROL SYSTEM SHALL BE INSTALLED IN ACCORDANCE WITH SPECIFICATIONS.
2. LABEL ALL T-STATS.
3. ALL POINTS INDICATED ON DRAWINGS SHALL BE INTEGRATED TO BUILDING AUTOMATION SYSTEM AND SHALL INCLUDE GRAPHIC.

NOTICE OF RESPONSIBILITY

ALL TEMPERATURE CONTROL AND WIRING DIAGRAMS (SCHEMATICS) SHOWN HEREIN ARE SCHEMATIC ONLY AND ARE INTENDED TO ONLY SHOW LOGIC AND GENERAL ARRANGEMENT. THE INSTALLING CONTRACTOR(S) ARE RESPONSIBLE TO COORDINATE AND VERIFY THE EXACT VOLTAGES, CURRENT DRAW AND LOADS, COMPATIBILITY, HOOK UP REQUIREMENTS, AND INTERFACES REQUIRED FOR WIRING OF ALL ITEMS AND EQUIPMENT. THE REQUIREMENTS OF DIFFERENT MANUFACTURERS MAY REQUIRE CHANGES TO WIRING. ANY SUCH CHANGES ARE THE RESPONSIBILITY OF THE INSTALLING CONTRACTOR(S) AND SHALL NOT RESULT IN ANY ADDITIONAL COST TO THE OWNER.

STATE OF MISSOURI
BRANDON W. CLASSEN
NUMBER
PE-2019000019
2020-03-23
PROFESSIONAL ENGINEER

ACI BOLAND ARCHITECTS
1710 Wyandotte
Kansas City, MO 64108
T: 816.763.9600

ACI/Boland, Inc.
Kansas City | St. Louis
Licensee's Certificate of Authority Number:

STRUCTURAL, MECHANICAL, ELECTRICAL, & PLUMBING CONSULTANT

PEC
Professional Engineering Consultants, P.A.
623 Massachusetts Street, Suite 200
Lawrence, KS 66044
State Certificate of Authority: #000465F
Phone Number: 785.842.6464

Lee's Summit Medical Center
Hybrid OR Addition
2100 SE Blue Parkway
Lee's Summit, MO 64063

Date	3-23-2020
Job Number	3-19058
Drawn By	DBB
Checked By	SPH

Revision

Number	Date	Description

M4.0

© 2020 ACI/BOLAND, Inc

CONTROL DIAGRAMS

3/23/2020 10:49:10 AM
BIM 360://190711-000 - Lee's Summit Med Cntr Hybrid OR Addn/190711-000-MASTER MECH-R19.rvt

3/23/2020 10:49:11 AM

CONTROL SEQUENCE GENERAL (RTU-01):

BUILDING AUTOMATION SYSTEM INTERFACE:
THE BUILDING AUTOMATION SYSTEM (BAS) SHALL SEND THE CONTROLLER OCCUPIED BYPASS, MORNING WARM-UP / PRE-COOL, OCCUPIED / UNOCCUPIED AND HEAT / COOL MODES. IF A BAS IS NOT PRESENT, OR COMMUNICATION IS LOST WITH THE BAS THE CONTROLLER SHALL OPERATE USING DEFAULT MODES AND SETPOINTS.

OCCUPIED MODE:
UNITS SHALL OPERATE CONTINUOSLY

UNOCCUPIED MODE:
UNITS SHALL OPERATE CONTINUOSLY

EMERGENCY POWER MODE:
GENERATOR SHALL SIGNAL BAS THAT BUILDING IS UNDER EMERGENCY POWER. IN THIS MODE THE ROOFTOP UNIT AND THE TERMINAL UNIT DAMPERS ARE POWERED.

SETPOINTS:
SUPPLY DISCHARGE AIR TEMPERATURE: 45 DEG F (ADJ)
SUPPLY FAN STATIC PRESSURE: 1.5" WG (ADJ)
SUPPLY FAN SPEED MAX: SEE SCHEDULE
SUPPLY FAN SPEED MIN: SEE SCHEDULE
SUPPLY DUCT HIGH STATIC: 2.5" WG (ADG)
SUPPLY RH MAX: 85% RH (ADJ)
ECONOMIZER: 25 DEG F TO 45 DEG F (ADJ)
COOLING MAX TEMP: 45 DEG F (ADJ)
COOLING MIN TEMP: 65 DEG F (ADJ)
HEAT ENABLED: 40 DEG F (ADJ)
SPACE HUMIDITY: 50% RH (ADJ)

ALARMS:
PROVIDE ALARM FOR THE FOLLOWING:
SUPPLY FAN: +/- 25% SETPOINT (ADJ)
RETURN FAN: +/- 25% SETPOINT (ADJ)
EXHAUST FAN: +/- 25% SETPOINT (ADJ)
HIGH STATIC PRESSURE: + 10% SETPOINT (ADJ)
LOW STATIC PRESSURE: - 10% SETPOINT (ADJ)
TEMP LOW SAFETY: - 25% SETPOINT (ADJ)
SUPPLY AIR TEMP HIGH: + 25% SETPOINT (ADJ)
SUPPLY AIR TEMP LOW: - 25% SETPOINT (ADJ)
FILTER DP: 2"WG (ADJ)
SPACE HUMIDITY: +/- 10% SETPOINT

ALL SAFETIES PROVIDED BY UNIT MANUFACTURER.

OPTIMAL START:
THE BAS SHALL MONITOR THE SCHEDULED OCCUPIED TIME, OCCUPIED SPACE SETPOINTS AND SPACE TEMPERATURE TO CALCULATE WHEN THE OPTIMAL START OCCURS.

MORNING WARM-UP MODE:
DURING OPTIMAL START, IF THE SPACE TEMPERATURE IS BELOW THE OCCUPIED HEATING SETPOINT A MORNING WARM-UP MODE SHALL BE ACTIVATED. WHEN MORNING WARM-UP IS INITIATED THE UNIT SHALL ENABLE THE HEATING AND SUPPLY FAN. THE OUTSIDE AIR DAMPER SHALL REMAIN CLOSED. WHEN THE SPACE TEMPERATURE REACHES THE OCCUPIED HEATING SETPOINT (ADJ.), THE UNIT SHALL TRANSITION TO THE OCCUPIED MODE.

PRE-COOL MODE:
DURING OPTIMAL START, IF THE SPACE TEMPERATURE IS ABOVE THE OCCUPIED COOLING SETPOINT, PRE-COOL MODE SHALL BE ACTIVATED. WHEN PRE-COOL IS INITIATED THE UNIT SHALL ENABLE THE FAN AND COOLING OR ECONOMIZER. THE OUTSIDE AIR DAMPER SHALL REMAIN CLOSED, UNLESS ECONOMIZING. WHEN THE SPACE TEMPERATURE REACHES OCCUPIED COOLING SETPOINT (ADJ.), THE UNIT SHALL TRANSITION TO THE OCCUPIED MODE.

OPTIMAL STOP:
THE BAS SHALL MONITOR THE SCHEDULED UNOCCUPIED TIME, OCCUPIED SETPOINTS AND SPACE TEMPERATURE TO CALCULATE WHEN THE OPTIMAL STOP OCCURS. WHEN THE OPTIMAL STOP MODE IS ACTIVE THE UNIT CONTROLLER SHALL MAINTAIN THE SPACE TEMPERATURE TO THE SPACE TEMPERATURE OFFSET SETPOINT.

OCCUPIED BYPASS:
THE BAS SHALL MONITOR THE STATUS OF THE "ON" AND "CANCEL" BUTTONS OF THE SPACE TEMPERATURE SENSOR. WHEN AN OCCUPIED BYPASS REQUEST IS RECEIVED FROM A SPACE SENSOR, THE UNIT SHALL TRANSITION FROM ITS CURRENT OCCUPANCY MODE TO OCCUPIED BYPASS MODE AND THE UNIT SHALL MAINTAIN THE SPACE TEMPERATURE TO THE OCCUPIED
SETPOINTS (ADJ.).

COOLING MODE:
DISCHARGE AIR TEMP:
THE UNIT CONTROLLER SHALL USE THE DISCHARGE AIR TEMPERATURE SENSOR AND DISCHARGE AIR TEMPERATURE COOLING SETPOINT TO DETERMINE WHEN TO INITIATE REQUESTS FOR COOLING. DISCHARGE AIR SETPOINT SHALL BE MAINTAINED BY MODULATING THE COOLING COIL, STAGING DX OR MODULATING THE ECONOMIZER AS REQUIRED TO MAINTAIN THE DISCHARGE AIR SETPOINT.

HEATING MODE:
DISCHARGE AIR TEMP:
DURING UNOCCUPIED HEATING OR MORNING WARM-UP MODE, THE UNIT HEAT REQUEST WILL BE COMMUNICATED TO THE SYSTEM VAVS PRIOR TO COMMENCING HEATING OPERATION TO ALLOW VAV UNITS TO OPEN. THE VFD SHALL BE COMMANDED TO 100% AND THE HEAT WILL BE STAGED ON AND OFF TO SATISFY THE ZONE TEMPERATURE SETPOINT. DURING OCCUPIED CHANGEOVER HEATING, THE UNIT CONTROLLER SHALL MODULATE THE GAS HEAT TO MAINTAIN THE DISCHARGE AIR HEATING SETPOINT.

HEAT MODE (STEAM COIL):
STEAM CONTROL VALVE TO MODULATE TO MAINTAIN DISCHARGE AIR DISCHARGE AIR TEMPERATURE SETPOINT.

SUPPLY AIR TEMPERATURE RESET CONTROL:
THE DISCHARGE AIR TEMPERATURE SETPOINT SHALL BE ADJUSTED BASED ON THE TEMPERATURE OF THE CRITICAL SPACE(S).

OUTDOOR AIR TEMPERATURE RESET:
THE DISCHARGE AIR TEMPERATURE SETPOINT SHALL BE ADJUSTED BASED ON THE OUTSIDE AIR TEMPERATURE AND THE COOLING LOAD OF THE BUILDING.

SPACE TEMPERATURE RESET:
THE DISCHARGE AIR TEMPERATURE SETPOINT SHALL BE ADJUSTED BASED ON THE TEMPERATURE OF THE CRITICAL SPACE(S).

ECONOMIZER CONTROL / REFERENCE DRY BULB:
THE SUPPLY AIR SENSOR SHALL MEASURE THE DRY BULB TEMPERATURE OF THE AIR LEAVING THE EVAPORATOR COIL WHILE ECONOMIZING. WHEN ECONOMIZING IS ENABLED AND THE UNIT IS OPERATING IN THE COOLING MODE, THE ECONOMIZER DAMPER SHALL MODULATE BETWEEN ITS MINIMUM POSITION AND 100% TO MAINTAIN THE SPACE TEMPERATURE SETPOINT. MINIMUM POSITION SHALL BE CALCULATED BASED ON SUPPLY FAN SPEED. IF THE MIXED AIR TEMPERATURE STARTS TO FALL BELOW 53.0 DEG. F, THE ECONOMIZER STARTS TO CLOSE, AT 50.0 DEG. F, THE DAMPER SHALL BE AT MINIMUM POSITION. COMPRESSORS SHALL BE DELAYED FROM OPERATING UNTIL THE ECONOMIZER HAS OPENED TO 100% FOR 5 MINUTES.

REFERENCE DRY BULB:
OUTSIDE AIR (OA) TEMPERATURE IS COMPARED WITH A REFERENCE DRY BULB POINT. THE ECONOMIZER IS ENABLED WHEN OA TEMPERATURE IS LESS THAN REFERENCE DRY BULB POINT. THE ECONOMIZER IS DISABLED WHEN OA TEMPERATURE IS GREATER THAN REFERENCE DRY BULB POINT + 5.0 DEG. F.

DEHUMIDIFICATION (DX-REHEAT):
THE UNIT SHALL BE IN DEHUMIDIFICATION MODE IF THE RETURN AIR HUMIDITY IS ABOVE THE DEHUMIDIFICATION SETPOINT. IN THE DEHUMIDIFICATION MODE, THE SUPPLY AIR FAN SHALL
BE ENABLED, THE OUTSIDE AIR DAMPER SHALL BE COMMANDED TO MINIMUM POSITION, AND THE UNIT CONTROLLER SHALL ENERGIZE MECHANICAL COOLING AND THE REHEAT SOLENOID.

HUMIDIFIER:
HUMIDISTAT IN THE SUPPLY DUCT DOWNSTREAM OF THE SUPPLY FAN SHALL MODULATE THE HUMIDIFIER TO MAINTAIN SETPOINT IN THE SPACE. PROVIDE A HIGH-LIMIT HUMIDISTAT IN THE DUCT TO LIMIT THE HUMIDITY IN THE UNIT TO HIGH SETPOINT. HUMIDIFIER SHALL BE OFF WHEN UNIT IS OFF AND WHEN UNIT IS IN THE UNOCCUPIED MODE.

MULTI CIRCUIT UNITS (DX):
DURING DEHUMIDIFICATION MODE THE OUTSIDE AIR TEMPERATURE SHALL BE MONITORED. IF THIS TEMPERATURE RISES ABOVE THE REHEAT CAPACITY LIMIT SETPOINT OR FALLS BELOW THE REHEAT CAPACITY LIMIT SETPOINT - 3.0 DEG. F, THE UNIT SHALL STAGE DOWN OR STAGE UP THE COMPRESSORS RESPECTIVELY TO MEET FULL OR PART LOAD CAPACITY REQUIREMENTS BASED ON AMBIENT TEMPERATURE.

SUPPLY FAN:
THE SUPPLY FAN SHALL BE ENABLED WHILE IN THE OCCUPIED MODE AND CYCLED ON DURING THE UNOCCUPIED MODE. THE UNIT CONTROLLER SHALL VARY THE SUPPLY FAN SPEED TO OPTIMIZE MINIMUM FAN SPEED IN ALL COOLING AND HEATING MODES. A DIFFERENTIAL PRESSURE SWITCH SHALL MONITOR THE DIFFERENTIAL PRESSURE ACROSS THE FAN. IF THE SWITCH DOES NOT OPEN WITHIN 40 SECONDS AFTER A REQUEST FOR FAN OPERATION A FAN FAILURE ALARM SHALL BE ANNUNCIATED, THE UNIT SHALL STOP, REQUIRING A MANUAL RESET.

RETURN FAN:
RETURN FAN OPERATES WHENEVER SUPPLY FAN IS PROVEN.

FAN TRACKING:
RETURN FAN SPEED SHALL MODULATE TO MAINTAIN A FIXED CFM DIFFERENTIAL BETWEEN SUPPLY AND RETURN AS DETERMINED BY TAB (FAN TRACKING)

FILTER STATUS:
A DIFFERENTIAL PRESSURE SWITCH SHALL MONITOR THE DIFFERENTIAL PRESSURE ACROSS THE FILTER WHEN THE FAN IS RUNNING. IF THE SWITCH CLOSES FOR 2 MINUTES AFTER A REQUEST FOR FAN OPERATION A DIRTY FILTER ALARM SHALL BE ANNUNCIATED AT THE BAS.

SMOKE DETECTOR SHUTDOWN:
THE UNIT SHALL SHUT DOWN IN RESPONSE TO A SIGNAL FROM EITHER SMOKE DETECTOR INDICATING THE PRESENCE OF SMOKE. THE SMOKE DETECTORS SHALL BE INTERLOCKED TO THE UNIT THROUGH THE DRY CONTACTS OF THE SMOKE DETECTORS. A MANUAL RESET OF THE SMOKE DETECTORS SHALL BE REQUIRED TO RESTART THE
UNIT.

FREEZE PROTECTION:
UPON SIGNAL FROM FREEZESTAT OR IF MIXED AIR TEMPERATURE FALLS BELOW 40 DEG F (ADJ) FOR 5 MINUTES, SUPPLY FAN AND RETURN FANS SHALL SHUT DOWN, OUTDOOR AIR AND RELIEF DAMPER SHALL BE CLOSED, HEATING COIL VALVE SHALL BE SET TO 50% AND COOLING COIL SHALL BE CLOSED.

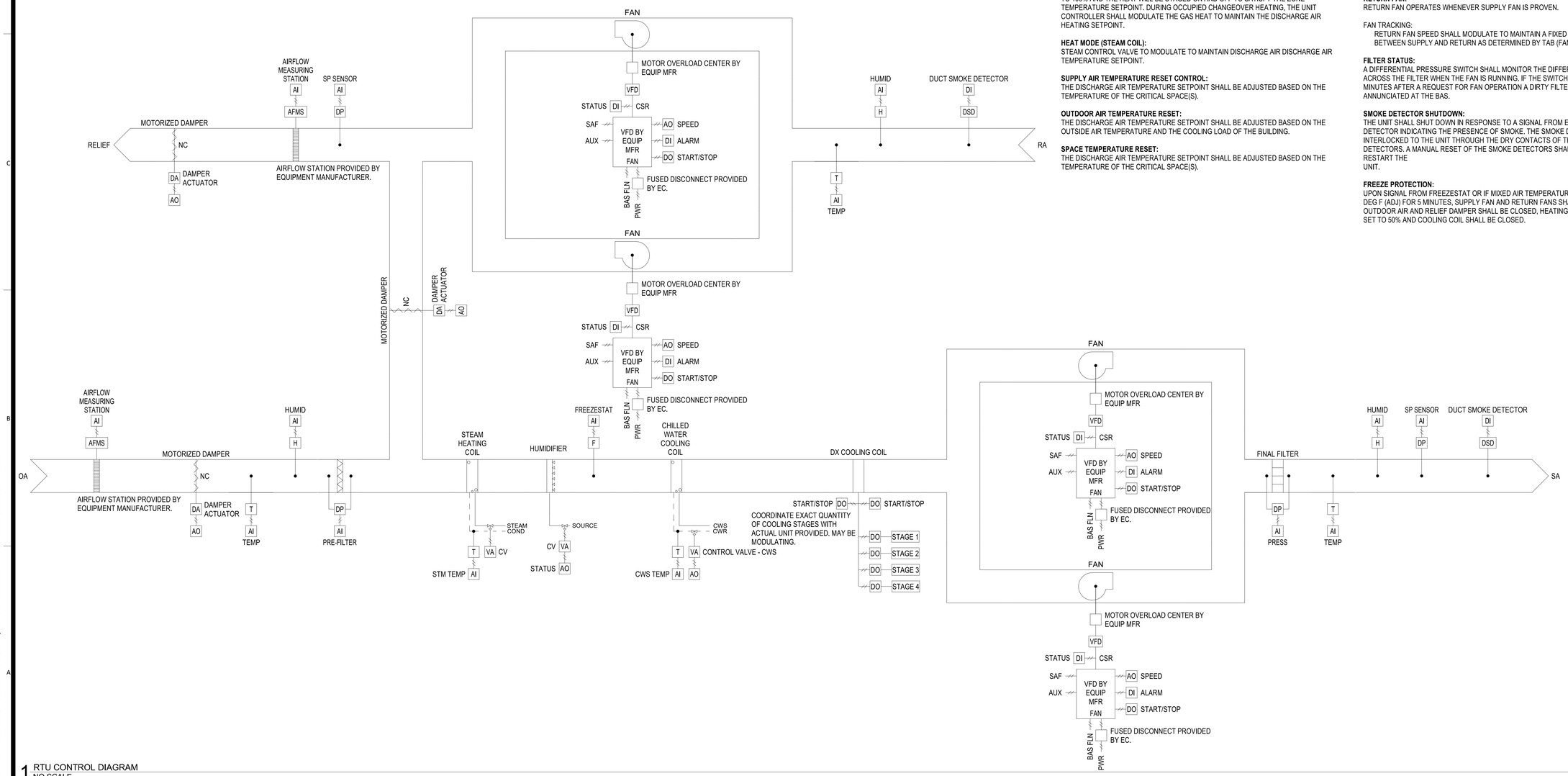

1 RTU CONTROL DIAGRAM
NO SCALE

BIM 360://190711-000 - Lee's Summit Med Cntr Hybrid OR Addn/190711-000-MASTER MECH-R19.rvt

STATE OF MISSOURI
BRANDON W. CLASSEN
NUMBER PE-2019000019
2020-03-23
PROFESSIONAL ENGINEER

ACI BOLAND ARCHITECTS
1710 Wyandotte
Kansas City, MO 64108
T: 816.763.9600

ACI/Boland, Inc.
Kansas City | St. Louis
Licensee's Certificate of Authority Number:

STRUCTURAL, MECHANICAL, ELECTRICAL, & PLUMBING CONSULTANT

PEC
Professional Engineering Consultants, P.A.
623 Massachusetts Street, Suite 200
Lawrence, KS 66044
State Certificate of Authority: #000465F
Phone Number: 785.842.6464

Lee's Summit Medical Center

Hybrid OR Addition
2100 SE Blue Parkway
Lee's Summit, MO 64063

Date	3-23-2020
Job Number	3-19058
Drawn By	Author
Checked By	Checker

Revision

Number	Date	Description

M4.1

© 2020 ACI/BOLAND, Inc

CONTROL DIAGRAMS

ROOFTOP UNIT SCHEDULE

REMARKS:
1. MODULAR DOUBLE WALL FIBER FREE UNIT WITH ACCESS SECTIONS, DISCHARGE PLENUM, INLET PLENUM, PRE-FILTERS, FINAL FILTERS, CHILLED WATER COIL, DX COOLING COIL, STEAM IFB COIL, STEAM HUMIDIFIER, DUAL SUPPLY AND RETURN FANS, SS DRAIN PANS, AFMS, OUTDOOR AIR DAMPERS, LED LIGHTS, AND VFD'S BY EQUIPMENT MANUFACTURER. DEDICATED 120V LIGHTING CIRCUIT.
2. NOTE: 30% GLYCOL.

MARK	AREA SERVED	MFR	MODEL	SUPPLY FAN							RETURN/EXHAUST FAN							COIL			FILTER		OA				RETURN AIR		ELECTRICAL						WEIGHT	REMARKS
				CFM		ESP	TSP	QTY	HP	DRIVE	CFM		ESP	TSP	QTY	HP	DRIVE	01	02	03	PRE	FINAL	CFM	SUM		WIN	EAT DB	EAT WB	VOLTS	PHASE	MCA	MOP	FLA	EP		
				MAX	MIN						MAX	MIN											MIN	EAT DB	EAT WB	EAT DB										
RTU-01	HYBRID OR ADDITION	YORK	XTO-48x81	6000	1800	2.5	6.38	2	4.7	DIR	6000	1800	1	1.49	2	1	DIR	HC-01	CC-01	CC-02	MERV 11	MERV 14	1150	96.4	74.7	0	67	57	460	3	34.7	35	27.7	Yes	15000	ALL

CONDENSING UNIT SCHEDULE-AIR COOLED

REMARKS:
1. SELECTION BASED ON SUMMER: 105 AND WINTER: -5. PROVIDE WITH TERMINAL STRIP READY FOR CONNECTION TO BAS SYSTEM, CONTROLLED BY BAS SYSTEM, VIBRATION ISOLATORS, SOUND BLANKETS, ALL VARIABLE CAPACITY COMPRESSORS AND PERMATRON PREVENT MODEL U CONDENSING COIL INTAKE FILTER WITH MAGNAMOUNT QUICK DISCONNECTS. MANUFACTURER SHALL CONFIRM SELECTIONS MEET PERFORMANCE REQUIREMENTS AND ADJUST AS REQUIRED.
   A. PIPING INSTALLATION SHALL BE INSPECTED BY MANUFACTURERS FACTORY TECHNICIAN.
   B. PURGE LINES WITH DRY NITROGEN PRIOR TO BRAZING.
   C. INSTALLATION PROCEDURES SHALL BE SUBMITTED PRIOR TO BEGINNING WORK.
   D. CLEANING PROCEDURES SHALL BE SUBMITTED PRIOR TO BEGINNING WORK.
   E. SUBMIT FINAL AS-BUILT DRAWINGS.
   F. PROVIDE START-UP BY MANUFACTURERS FACTORY TECHNICIAN.

MARK	MATCH WITH MARK	LOCATION	AREA SERVED	APPLICATION	BASED ON		EER	AMB	CLG MBH		COMPRESSOR									CONDENSER		UNIT ELECTRICAL						UNIT WEIGHT	REMARKS
					MFR	MODEL			TOTAL	SENS	TYPE	CIRC QTY	QTY	DRIVE	ELECTRICAL					QTY	DRIVE	VOLTS	PHASE	FLA	MCA	MOP	EP		
															VOLTS	PHASE	AMPS	FLA	RLA										
CC-RTU-01	RTU-01	ROOF	HYBRID OR ADDITION	DX COOLING	YORK	YCUL0031EE46	7.76	105	121	59	SCROLL	2	2	DIR	460	3	64.7	4	0	2	DIR	460	3	64.7	100	187	Yes	2000	

GRILLE, REGISTER, AND DIFFUSER SCHEDULE

GRILLE CALLOUT IN GRILLE AND REGISTER SCHEDULE — RW12.12-500 — CUBIC FEET OF AIR PER MINUTE
CONNECTION SIZE (12x12) (RECTANGULAR)
GRILLE CALLOUT SYMBOL - RECTANGULAR

GRILLE CALLOUT IN GRILLE AND REGISTER SCHEDULE — SB10-250 — CUBIC FEET OF AIR PER MINUTE
CONNECTION AND RUNOUT SIZE (10"ø) (ROUND)
GRILLE CALLOUT SYMBOL - ROUND

GRILLE CALLOUT IN GRILLE AND REGISTER SCHEDULE — SK10.4S-250 — CUBIC FEET OF AIR PER MINUTE
CONNECTION AND RUNOUT SIZE (10"ø) (ROUND) — NUMBER OF SLOTS
GRILLE CALLOUT SYMBOL - SLOT

FIRST LETTER IN MARK:
S = SUPPLY DIFFUSER
R = RETURN GRILLE
P = PLENUM RETURN GRILLE
E = EXHAUST GRILLE
L = LAMINAR FLOW SUPPLY DIFFUSER
F = FAN FILTER SUPPLY DIFFUSER
C = SECURITY GRILLE
U = FLOOR MOUNTED SUPPLY GRILLE

NOTES:
1. PROVIDE SQUARE TO ROUND ADAPTERS AS REQUIRED TO ACCOMODATE ROUND RUNOUTS.
2. PROVIDE ALL LAY-IN GRDs WITH 24x24 LAY-IN PANEL AS REQUIRED.
3. FINISH TO BE WHITE UNLESS OTHERWISE SPECIFIED. COORDINATE AND VERIFY ALL FINISHES WITH ARCHITECT. ALL SELECTIONS ARE BASED ON A MAXIMUM NC OF 25
4. UNLESS NOTED OTHERWISE, CONTRACTOR SHALL VERIFY ALL CEILING TYPES AND
5. ASSOCIATED BORDER TYPES. MARKS USED MAY NOT BE IN SEQUENCE.
6.

REMARKS LEGEND:
EC = EGGCRATE
LB = LONG BLADES PARALLEL TO LONG DIMENSION
SB = SHORT BLADES PARALLEL TO LONG DIMENSION
LF = LOUVERED FACE
LA = LAMINAR AIRFLOW
DE = DAMPER / EXTRACTOR
EI = EXTERNALLY INSULATED
AI = AIRFLOW LIGHT INDICATOR (GREEN)
FI = FILTER LOAD INDICATOR (RED)
CF = CONTINUOUS FILTER MONITORING (0-10V SIGNAL)
DD = DIFFUSION DISC ROOM SIDE BALANCING DISK
SS = STAINLESS STEEL
OBD = OPPOSED BLADE DAMPER
FD = FIRE DAMPER
RSR = ROOM SIDE REPLACEABLE HEPA
TZ = FILTER
NP = TECHZONE CEILING COMPATIBLE NOT PAINTED

MARK	TYPE	IMAGE	BASED ON		MOUNT	PANEL SIZE	FACE SIZE	MATERIAL	BLADE SPACING / SLOT WIDTH	DEFLECTION	REMARKS
			MFR	MODEL							
EA	EXHAUST GRILLE		TITUS	350FL	LAY-IN	24x24	12x12	ALUMINUM	3/4	35°	SB
EB	EXHAUST GRILLE		TITUS	350FL	LAY-IN	24x24	24x24	ALUMINUM	3/4	35°	SB
LA	LAMINAR FLOW SUPPLY DIFFUSER		TITUS	TLF-SS	SURFACE	24x24		ALUMINUM	-	-	DD, LA
LB	LAMINAR FLOW SUPPLY DIFFUSER		TITUS	TLF-SS	SURFACE	24x48		ALUMINUM	-	-	DD, LA
LE	LAMINAR FLOW SUPPLY DIFFUSER		TITUS	TLF-SS	SURFACE	12x48		ALUMINUM	-	-	DD, LA
RC	RETURN GRILLE		TITUS	350FL	LAY-IN	24x24	22x22	ALUMINUM	3/4	35°	LB
RW	WALL RETURN		TITUS	350FL	WALL	SEE PLANS	SEE PLANS	ALUMINUM	3/4	35°	
SC	SUPPLY DIFFUSER		TITUS	TDC-AA	LAY-IN	24x24	12x12	ALUMINUM	-	-	LOUVERED FACE

EXHAUST FAN SCHEDULE

REMARKS:
1. PROVIDE WITH ECM MOTOR, FAN SPEED CONTROLLER, BACKDRAFT DAMPER, BIRDSCREEN, INTERNAL WIRING PIGTAIL AND ROOF CURB.

   ALL EXHAUST FANS SHALL HAVE PERMANENTLY LUBRICATED BEARINGS AND DISCONNECT SWITCH PROVIDED AND INSTALLED BY EC.

MARK	AREA SERVED	LOC	MFR	MODEL	TYPE	FAN									MOTOR			ELECTRICAL			WEIGHT	REMARKS
						CFM	ESP	TYPE	QTY	HP	DRIVE	RPM	DBA	SONES	HP	RPM	SPEED	VOLTS	PHASE	AMPS		
EF-01	HYBRID OR ADDITION	ROOF	GREENHECK	G-123-VG	DN	950	1	DOWN	1	0.26	DIR	1435	62	11.7	0.5	1725	VAR	120	1	6.4	100	ALL

TERMINAL UNIT SCHEDULE - HYDRONIC

REMARKS:
1. ALL TERMINAL UNITS SHALL BE PROVIDED WITH FLOW-RING SERVICE 'T'.
2. ALL TERMINAL UNITS FOR USE IN HEALTHCARE APPLICATIONS SHALL BE PROVIDED WITH FIBER FREE STERILOC LINER. UNLESS INDICATED OTHERWISE.
3. ALL ELECTRIC TERMINAL UNITS SHALL BE PROVIDED WITH INDEPENDENT DISCONNECT SWITCH AND FUSE BLOCK BY EQUIPMENT MANUFACTURER.

MARK	BASED ON		UNIT SIZE	PRIMARY AIR		OP SP	MAX NC RAD	FAN			HEATING COIL										ELECTRICAL			LINER TYPE	REMARKS
	MFR	MODEL		MAX	MIN			CFM	ESP	HP	AIR			HOT WATER COIL							VOLTS	PHASE	EP		
											CFM	EAT	LAT	MBH	EWT	LWT	MAX APD	GPM	MAX WPD	ROWS					
T1-01A	TITUS	DESV	24	2250	2250	1	30	0	0	0	2250	45	90	93	180	150.3	0.17	5.0	1.9	2	24	1	Yes	STERILOC	ALL
T1-01B	TITUS	DESV	24	2250	2250	1	30	0	0	0	2250	45	90	93	180	150.3	0.17	5.0	1.9	2	24	1	Yes	STERILOC	ALL
T1-02	TITUS	DESV	9	700	210	1	30	0	0	0	700	45	90	57	180	150.3	0.56	2.5	0.15	2	24	1	Yes	STERILOC	ALL
T1-03	TITUS	DESV	7	500	150	1	30	0	0	0	500	45	90	24	180	24.4	0.16	1.8	0.57	2	24	1	Yes	STERILOC	ALL
T1-04	TITUS	DESV	6	250	75	1	30	0	0	0	250	45	90	12	180	152.3	0.2	0.9	0.2	2	24	1	Yes	STERILOC	ALL

TERMINAL UNIT SCHEDULE - RETURN

REMARKS:
1. ALL TERMINAL UNITS SHALL BE PROVIDED WITH FLOW-RING SERVICE 'T'.
2. ALL TERMINAL UNITS FOR USE IN HEALTHCARE APPLICATIONS SHALL BE PROVIDED WITH FIBER FREE STERILOC LINER. UNLESS INDICATED OTHERWISE.
3. ALL ELECTRIC TERMINAL UNITS SHALL BE PROVIDED WITH INDEPENDENT DISCONNECT SWITCH AND FUSE BLOCK BY EQUIPMENT MANUFACTURER.

MARK	BASED ON		UNIT SIZE	PRIMARY AIR		OP SP	MAX NC RAD	FAN			AIR		ELECTRICAL			LINER TYPE	REMARKS
	MFR	MODEL		MAX	MIN			CFM	ESP	HP	EAT	LAT	VOLTS	PHASE	EP		
TR1-01A	TITUS	DESV	14	1950	585	1	30	0	0	0	0	0	24	1	Yes	STERILOC	ALL
TR1-01B	TITUS	DESV	14	1950	585	1	30	0	0	0	0	0	24	1	Yes	STERILOC	ALL

COIL SCHEDULE - CHILLED WATER

REMARKS:
1. BASED ON 30% PROPYLENE GLYCOL.

MARK	MATCH WITH MARK	LOC	MFR	MODEL	FLUID TYPE	AIR							COIL								COIL DESCRIPTON					REMARKS
						CFM	MAX APD	FV FPM	EAT		LAT		MBH		SIZE		WATER				COIL TYPE	ROWS	FIN TYPE	FPI	CONN SIZE	
									DB	WB	DB	WB	TOT	SENS	W	H	GPM	EWT	LWT	WPD						
CC-01	RTU-01	ROOF	YORK	TBD	GLYCOL	6000	0.45	324	72.9	61.1	46.7	46.6	227	162	39"	68"	37.8	42	54	6.3	FULL	8	SINE	10	2.5"	ALL

COIL SCHEDULE - DX

REMARKS:
1. MANUFACTURER SHALL CONFIRM SELECTION MEETS PERFORMANCE REQUIREMENTS AND ADJUST AS REQUIRED. MC SHALL BE RESPONSIBLE FOR ALL PIPING CONNECTIONS, SIZING AND ROUTING OF REFRIGERANT PIPING.

MARK	MATCH WITH MARK	LOC	MFR	MODEL	REFRIG TYPE	AIR							COIL				COIL DESCRIPTION				REMARKS
						CFM	APD MAX	FV FPM	EAT		LAT		MBH		SIZE		COIL TYPE	ROWS	FIN TYPE	FPI	
									DB	WB	DB	WB	TOT	SENS	H	W					
CC-02	RTU-01	RTU-01	YORK	TBD	R-410a	6000	0.58	324	47	47	37.9	37.9	121	59	68"	39"	FULL	8	SINE	10	ALL

COIL SCHEDULE - STEAM

REMARKS:
1. BASED ON IFB COIL.

MARK	MATCH WITH MARK	LOC	MFR	MODEL	AIR					COIL							COIL DESCRIPTION					REMARKS
											SIZE		STEAM									
					CFM	MAX APD	FV FPM	EAT DB	LAT DB	MBH TOT	H	W	PSIG ENT COIL	CONTROL VALVE PSIG ENT	CONTROL VALVE PSIG LVG	TRAP LB/HR	COIL TYPE	ROWS	FIN TYPE	FPI	CONN SIZE	
HC-01	RTU-01	RTU-01	YORK	TBD	6000	0.02	326	40	85.5	295	68"	39"	5	85	5	30	FULL	1	COR	6	2	ALL

STATE OF MISSOURI
BRANDON W. GLASSER
NUMBER PE-2019000019
2020-03-23
PROFESSIONAL ENGINEER

ACI BOLAND ARCHITECTS
1710 Wyandotte
Kansas City, MO 64108
T: 816.763.9600

ACI/Boland, Inc.
Kansas City | St. Louis
Licensee's Certificate of Authority Number:

STRUCTURAL, MECHANICAL, ELECTRICAL, & PLUMBING CONSULTANT

PEC
Professional Engineering Consultants, P.A.
623 Massachusetts Street, Suite 200
Lawrence, KS 66044
State Certificate of Authority: #000465F
Phone Number: 785.842.6464

Lee's Summit Medical Center
Hybrid OR Addition
2100 SE Blue Parkway
Lee's Summit, MO 64063

Date	3-23-2020
Job Number	3-19058
Drawn By	DBB
Checked By	SPH

Revision

Number	Date	Description

M5.0

© 2020 ACI/BOLAND, Inc

MECHANICAL SCHEDULES

3/23/2020 10:49:14 AM
BIM 360://190711-000 - Lee's Summit Med Cntr Hybrid OR Addn/190711-000-MASTER MECH-R19.rvt

CRAC INDOOR UNIT SCHEDULE

REMARKS
1. ALL CRAC UNITS SHALL BE PROVIDED WITH VARIABLE SPEED ECM OR SCR FAN, FILTER, FILTER CLOG INDICATOR AND ALARM, INFRAFRED HUMIDIFIER, STAGED ELECTRIC REHEAT, SUPPLY AIR SENSOR, TEMPERATURE AND HUMIDITY SENSOR, COMMON ALARM CONTACT, CONDENSATE PUMP (WHERE REQUIRED), TOUCH SCREEN CONTROLS, BACNET INTEGRATION AND DISCONNECT SWITCH PROVIDED BY EQUIPMENT MANUFACTURER. CEILING MOUNTED CRAC UNITS SHALL BE PROVIDED WITH AIR DISTRIBUTION PLENUM.
2. ABOVE CEILING MOUNTED CRAC UNITS SHALL BE PROVIDED WITH FILTER RACK AND FLANGED DUCT CONNECTIONS.
3. FLOOR MOUNTED CRAC UNITS SHALL BE PROVIDED WITH STAND WITH ADJUSTABLE LEGS, LEAK DETECTION SENSOR AND CABLE.

MARK	MATCH WITH	MANUFACTURER	MODEL	TYPE	CFM	FAN HP	COOLING								HEATING		HUMIDIFIER			ELECTRICAL						FILTER TYPE	WEIGHT	REMARKS
							MBH TOTAL	MBH SENS	EAT DB	EAT WB	ENT RH %	LAT DB	LAT WB	AMBIENT	KW	AMBIENT	TYPE	CAPACITY LB/H	KW	VOLTS	PHASE	AMPS	FLA	MOP	EP			
CRAC-01	COND-CRAC-01	LIEBERT	MMD36E	CEILING	1250	0.5	28.9	25.4	72	58.7	45	53.1	50.6	105	7.3	0	IFR	4.3		460	3	16.5	13.2	20	Yes	MERV 8	350	ALL

CRAC CONDENSING UNIT SCHEDULE

REMARKS:
1.PROVIDE WITH DIGITAL SCROLL COMPRESSOR, STEAM GENERATED HUMIDIFIER, REHEAT SECTION, CONDENSATE PUMP, DISCONNECT PROVIDED BY EQUIPMENT MANUFACTURER AND OVERFLOW DRAIN SENSOR IN PIT. BACNET INTEGRATION AS REQUIRED

MARK	MATCH WITH MARK	MFR	MODEL	MBH TOTAL	SUMMER AMB	WINTER AMB	COMPRESSOR TYPE	ELECTRICAL					WEIGHT	REMARKS
								VOLTS	PHASE	FLA	MOP	EP		
COND-CRAC-01	CRAC-01	LIEBERT	PFH037AH	28.9	105	0	SCROLL	460	3	6.4	15	Yes	250	ALL

LOUVER SCHEDULE

REMARKS:
1. PROVIDE WITH BRIDSCREEN. CONFIRM FINAL ELEVATION WITH ARCHITECT.

MARK	MATCH WITH MARK	AREA SERVED	USAGE	MFR	MODEL	MATERIAL	DESIGN CFM	MAX APD	MIN. FREE AREA	SIZE			FINISH	USAGE	MAX H20 PEN OZ/SF AT 1000 FPM	REMARKS
										WIDTH	HEIGHT	DEPTH				
L-9A	(E) AHU-09	RELIEF AIR	RELIEF AIR	RUSKIN	ELF6375DX	ALUMINUM	6000	0.05	5.5	48"	30"	6"	KYNAR	INTAKE	0.01	ALL

HUMIDIFIER SCHEDULE

REMARKS:
1. STEAM HUMIDIFIER PROVIDED WITH UNIT. BASED ON 5 PSI STEAM.

MARK	MATCH WITH	LOCATION	MFR	MODEL	TYPE	CFM	SIZE		MANIFOLD QTY	WATER SOURCE	EAT		LAT		HUMID LOAD	ABSORP DIST	REMARKS
							W	H			DB	RH	DB	RH			
HU-01	RTU-01	RTU-01	YORK	HUMIDIFIER		6000	81"	48"	1	STEAM	50	15	50	55	84	14"	ALL

STATE OF MISSOURI
BRANDON W. ELASSER
NUMBER PE-2019000019
2020-03-23
PROFESSIONAL ENGINEER

ACI BOLAND ARCHITECTS
1710 Wyandotte
Kansas City, MO 64108
T: 816.763.9600

ACI/Boland, Inc.
Kansas City | St. Louis
Licensee's Certificate of Authority Number:

STRUCTURAL, MECHANICAL, ELECTRICAL, & PLUMBING CONSULTANT

PEC
Professional Engineering Consultants, P.A.
623 Massachusetts Street, Suite 200
Lawrence, KS 66044
State Certificate of Authority: #000465F
Phone Number: 785.842.6464

Lee's Summit Medical Center

Hybrid OR Addition
2100 SE Blue Parkway
Lee's Summit, MO 64063

Date	3-23-2020
Job Number	3-19058
Drawn By	Author
Checked By	Checker

Revision

Number	Date	Description

M5.1

© 2020 ACI/BOLAND, Inc

MECHANICAL SCHEDULES

3/23/2020 10:49:16 AM
BIM 360://190711-000 - Lee's Summit Med Cntr Hybrid OR Addn/190711-000-MASTER MECH-R19.rvt

3/23/2020 10:49:20 AM

MECHANICAL DEMOLITON NOTES:

1. THIS IS A LIFE SAFETY BUILDING WHICH MEANS IT SHALL REMAIN REASONABLY OPERATIONAL IN THE CASE OF A SEISMIC EVENT. THEREFORE ALL STATIONARY EQUIPMENT ON THE FLOOR OR A MEZZANINE AND ALL CONCRETE PADS SHALL BE FIXED RIGIDLY TO THE STRUCTURE. ALL ROTATING OR RECIPROCATING OR VIBRATING EQUIPMENT SHALL BE INSTALLED WITH EARTHQUAKE SNUBBERS TO LIMIT MOVEMENT. ALL HANGING EQUIPMENT, PIPING, AND DUCTWORK SHALL BE BRACED TO THE STRUCTURE. REFER TO SPECIFICATION SECTION 21 0548, 22 0548 AND 23 0548.
2. EXISTING CONDITIONS WERE TAKEN FROM ORIGINAL DRAWINGS & SITE VISITS AND MAY NOT REFLECT EXACT "AS-BUILT" CONDITION. VERIFY ALL EXISTING CONDITIONS PRIOR TO SUBMITTING FINAL BIDS, AND PRIOR TO FABRICATION OR ORDERING OF EQUIPMENT OR MATERIALS. BRING ANY DISCREPANCIES FROM THE DRAWINGS AND NOTES TO THE OWNER'S REPRESENTATIVE IMMEDIATELY. CONTRACTOR SHALL CAREFULLY COORDINATE NEW WORK AND DEMOLITION WITH ALL OTHER DISCIPLINES AND ALL EXISTING CONDITIONS. LACK OF SUCH COORDINATION AND MINOR CHANGES IN THE SCOPE OF THE DEMOLITION WORK SHALL NOT JUSTIFY AN ADDITIONAL COST.
3. REMOVAL OF EXISTING TERMINAL UNITS, FIXTURES AND EQUIPMENT WILL REQUIRE ISOLATING THE PIPING RISERS OR MAINS VIA SHUT-OFF VALVES. INSTALL NEW ISOLATION VALVES WHERE REQUIRED FOR COMPLETION OF NEW WORK.
4. REMOVAL OF EXISTING DUCTWORK, DIFFUSERS, GRILLES, REGISTERS, PLUMBING FIXTURES, TERMINAL UNITS, ETC. WILL REQUIRE CAPPING, SEALING AND INSULATING EXISTING MAINS OR BRANCHES AS NECESSARY AND REQUIRED TO ALLOW THE REMAINING SYSTEMS TO FULLY OPERATE WITHOUT DEGRADATION.
5. CONTRACTOR SHALL PROVIDE PROTECTIVE PLASTIC DROP CLOTHS TO PROTECT THE EXISTING OCCUPIED AREAS AND EQUIPMENT FROM DUST AND DEBRIS DURING THE CONSTRUCTION WORK, AND SHALL CLEAN THE AREAS OF ALL CONSTRUCTION DIRT DAILY, AND UPON COMPLETION OF THE WORK. PHASING REQUIREMENTS AND SCHEDULE WILL BE PROVIDED BY OWNER.
6. REMOVE ALL EXISTING DUCTWORK, GRILLES, DIFFUSERS, AND PIPING SHOWN SHADED, CROSS HATCHED OR DASHED.
7. REPLACE EXISTING FLEXIBLE DUCTS WHERE INDICATED TO BE REUSED IF THEY EXCEED THE MAXIMUM LENGTH AS DICTATED IN THE SPECIFICATIONS.
8. REMOVE INSULATION FROM PIPING AND DUCTWORK THAT IS INDICATED TO BE REUSED. REFER TO SPECIFICATION FOR TYPE AND THICKNESS OF INSULATION TO BE USED FOR RE-INSULATION OF EXISTING PIPING.
9. ALL DRAINED PIPING RISERS AND MAINS SHALL BE REFILLED WITH FLUID AND PROPERLY VENTED BY THIS CONTRACTOR, ONCE NEW WORK HAS BEEN INSTALLED.
10. COORDINATE WITH GENERAL CONTRACTOR THE REMOVAL AND REPLACEMENT OF ALL EXISTING CEILINGS, WALLS, ETC. AS REQUIRED FOR MECHANICAL DEMOLITION WORK.
11. EXISTING DUCTS, PIPING AND EQUIPMENT, ETC., NOT TO BE UTILIZED IN THE COMPLETED BUILDINGS SHALL BE DISCONTINUED OR REMOVED AS REQUIRED. ALL ENDS OF DISCONTINUED PIPING AND DUCTS SHALL BE CAPPED IN THE NEAREST WALL, CEILING OR FLOOR SO THAT THEY ARE COMPLETELY CONCEALED. OPENINGS LEFT IN WALLS, CEILINGS, ETC., WHERE EQUIPMENT, PIPE AND DUCTS, ETC., ARE REMOVED AND NOT REPLACED SHALL BE PATCHED NEATLY WITH SIMILAR MATERIAL TO ADJACENT CONSTRUCTION. REFER TO DRAWINGS DELINEATING NEW WORK FOR ADDITIONAL INFORMATION REGARDING SYSTEMS OR PORTIONS OF SYSTEMS WHERE USE IS TO BE DISCONTINUED.
12. EXISTING PIPING, FIXTURES AND EQUIPMENT THAT ARE NOT TO BE REUSED SHALL BE REMOVED AND SHALL REMAIN THE PROPERTY OF THE OWNER IF HE WISHES TO RETAIN OWNERSHIP OF SAME. IF NOT, EQUIPMENT SHALL BECOME THE PROPERTY OF THIS CONTRACTOR AND SHALL BE REMOVED FROM THE SITE AS SOON AS PRACTICAL AND DISPOSED OF IN ACCORDANCE WITH APPLICABLE LAWS AND REGULATIONS.
13. ALL CUTTING AND CHANNELING OF EXISTING BUILDING SHALL BE ACCOMPLISHED IN A NEAT AND WORKMANLIKE MANNER WITHOUT REMOVAL OF EXCESS MATERIALS. THIS CONTRACTOR SHALL PATCH AND REPLACE WITH MATERIAL SIMILAR TO ADJACENT CONSTRUCTION.
14. WHERE EXISTING DUCTS, PIPING AND EQUIPMENT, ETC., THAT ARE TO BE UTILIZED IN THE COMPLETED PROGRAM CONFLICT WITH NEW CONSTRUCTION AND THE REQUIRED DEMOLITION, THEY SHALL BE RELOCATED AND RECONNECTED TO MAINTAIN THE DESIRED SERVICE.
15. THIS CONTRACTOR SHALL GIVE FULL COOPERATION TO THE GENERAL CONTRACTOR IN THE SCHEDULING AND PROCEDURE OF WORK AND SHALL TAKE EVERY PRECAUTION TO PREVENT DAMAGE FROM FREEZING TO EXISTING SYSTEMS.

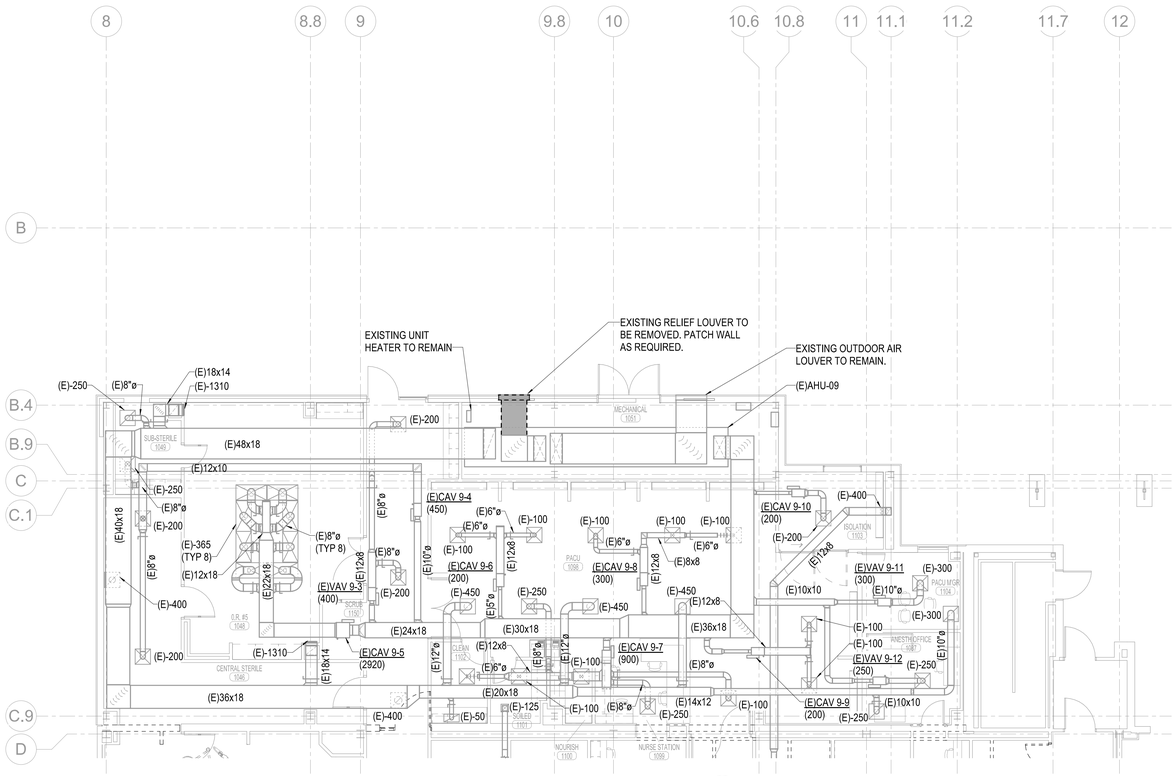

1 HVAC DEMOLITION FLOOR PLAN
1/8" = 1'-0"

NORTH

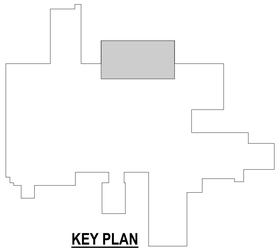

KEY PLAN

STATE OF MISSOURI
BRANDON W. CLASSEN
NUMBER PE-2019000019
2020-03-23
PROFESSIONAL ENGINEER

ACI BOLAND ARCHITECTS

1710 Wyandotte
Kansas City, MO 64108
T: 816.763.9600

ACI/Boland, Inc.
Kansas City | St. Louis
Licensee's Certificate of Authority Number:

STRUCTURAL, MECHANICAL, ELECTRICAL, & PLUMBING CONSULTANT

PEC

Professional Engineering Consultants, P.A.
623 Massachusetts Street, Suite 200
Lawrence, KS 66044
State Certificate of Authority: #000465F
Phone Number: 785.842.6464

Lee's Summit Medical Center

Hybrid OR Addition
2100 SE Blue Parkway
Lee's Summit, MO 64063

Date	3-23-2020
Job Number	3-19058
Drawn By	DBB
Checked By	SPH

Revision

Number	Date	Description

MD1.0

© 2020 ACI/BOLAND, Inc

HVAC DEMOLITION FLOOR PLAN

BIM 360://190711-000 - Lee's Summit Med Cntr Hybrid OR Addn/190711-000-MASTER MECH-R19.rvt

HVAC & PLUMBING SYMBOL SCHEDULE

SYMBOL	DESCRIPTION	SYMBOL	DESCRIPTION
(#)	REFER TO PLAN NOTES	111	ROOM CALLOUT
(E)	EXISTING EQUIPMENT OR MATERIAL DESIGNATION		REVISION NUMBER
	EXISTING COMPONENT PEN WEIGHT		CONNECT NEW TO EXISTING. VERIFY EXACT LOCATION.
	DEMOLITION PEN WEIGHT - COMPONENT MAY ALSO BE SHADED		DISCONNECT FROM EXISTING. VERIFY EXACT LOCATION.
T.C.C.	TEMPERATURE CONTROL CONTRACTOR	G.C.	GENERAL CONTRACTOR
E.C.	ELECTRICAL CONTRACTOR	M.C.	MECHANICAL CONTRACTOR
P.C.	PLUMBING CONTRACTOR	TYP.	TYPICAL ALL INSTANCES
24x12	(UP)DUCT SEC., POSITIVE PRESSURE-FIRST SIZE IS TOP DIM.(TYP.)		BALANCING DAMPER W/ MANUAL LOCKING QUADRANT
24x12	(DOWN) DUCT SECTION, POSITIVE PRESSURE		RECTANGULAR - OPPOSED BLADE / ROUND - BUTTERFLY
24x12	(UP) DUCT SECTION, NEGATIVE PRESSURE		BALANCING DAMPER W/ MOTORIZED LOCKING QUADRANT
24x12	(DOWN) DUCT SECTION, NEGATIVE PRESSURE		RECTANGULAR - OPPOSED BLADE / ROUND - BUTTERFLY
	SUPPLY DUCT DROP	18x12	DUCT SIZE, FIRST FIGURE IS SIDE SHOWN-CLEAR INSIDE DIM.
	SUPPLY DUCT RISER	→ R	DUCT CHANGE OF ELEVATION RISE(R) DROP(D)
	RETURN DUCT DROP		FLEXIBLE CONNECTION
	RETURN DUCT RISER		SIDE WALL SUPPLY REGISTER
	FLEXIBLE DUCT	RTU	ROOFTOP UNIT
	TURNING VANES	AHU	AIR HANDLING UNIT
SA	SUPPLY AIR	VAV	VARIABLE AIR VOLUME UNIT
OA	OUTSIDE AIR	FTU	FAN POWERED TERMINAL UNIT
RA	RETURN AIR	FCU	FAN COIL UNIT
EA	EXHAUST AIR	MAU	MAKE-UP AIR UNIT
OBD	OPPOSED BLADE DAMPER	SF	SUPPLY AIR FAN
BOD	BOTTOM OF DUCT ELEVATION ABOVE FLOOR	EF	EXHAUST FAN
BOS	BOTTOM OF STEEL	SR	SUPPLY REGISTER
TOD	TOP OF DUCT ELEVATION ABOVE FLOOR	RG	RETURN GRILLE
DH	DUCT HEATER	F	FURNACE
DP	DIFFERENTIAL PRESSURE	UH	UNIT HEATER
CVR	CONSTANT VOLUME REHEAT UNIT	CRAC	COMPUTER ROOM AIR CONDITIONING UNIT
V V R	VARIABLE VOLUME REHEAT UNIT	H	HUMIDIFIER
V V T	VARIABLE VOLUME VARIABLE TEMPERATURE	VFD	VARIABLE FREQUENCY DRIVE
UV	ULTRAVIOLET STERILE CONDITIONER	FD	FIRE DAMPER IN FLOOR (VERTICAL POSITION)
R	RADIATION DAMPER	FD	FIRE DAMPER IN WALL (HORIZONTAL POSITION)
M	MOTOR	SD	SMOKE DAMPER
T	TEMPERATURE SENSOR	FSD	COMBINATION FIRE/SMOKE DAMPER (VERTICAL POSITION)
H	HUMIDITY SENSOR	FSD	COMBINATION FIRE/SMOKE DAMPER (HORIZONTAL POSITION)
(H)	ELECTRIC OR DDC HUMIDISTAT (HSTAT)	(T)	ELECTRIC OR DDC THERMOSTAT (TSTAT)
(H)	PNEUMATIC HUMIDISTAT	(T)	PNEUMATIC THERMOSTAT
CWS	CHILLED WATER SUPPLY LINE (CWS)	HWS	HOT WATER SUPPLY LINE (HWS)
CWR	CHILLED WATER RETURN LINE (CWR)	HWR	HOT WATER RETURN LINE (HWR)
CHWS	CHILLED HOT WATER SUPPLY	HWRR	HOT WATER REVERSE RETURN LINE (HWRR)
CHWR	CHILLED HOT WATER RETURN	CS	COOLING TOWER WATER SUPPLY (CS)
CWPP	CHILLED WATER PRIMARY PUMP	CR	COOLING TOWER WATER RETURN (CR)
CWSP	CHILLED WATER SECONDARY PUMP	CWP	CHILLED WATER PUMP
HWPP	HOT WATER PRIMARY PUMP	HWP	HOT WATER PUMP
HWSP	HOT WATER SECONDARY PUMP	CHWP	CHILLED/HOT WATER PUMP
	DOUBLE CHECK BACKFLOW ASSEMBLY		BALL VALVE
	REDUCED PRESSURE ZONE BACKFLOW ASSEMBLY		CALIBRATED BALANCE VALVE - CIRCUIT SETTER
	GAS COCK		BUTTERFLY VALVE
	VALVE IN DROP		2-WAY CONTROL VALVE (PNEUMATIC)
	VALVE IN RISER		3-WAY CONTROL VALVE (PNEUMATIC)
	GATE VALVE / SHUT OFF VALVE		2-WAY CONTROL VALVE (ELECTRIC)
	GLOBE VALVE		3-WAY CONTROL VALVE (ELECTRIC)
	3 PIECE BALL VALVE		CHECK VALVE
	HYDRAULIC VALVE		PRESSURE REDUCING VALVE (PRV)
	EMERGENCY VALVE WITH FIRE LINK		WAFER CHECK VALVE
	STRAINER		AUTOMATIC FLOW CONTROL VALVE
	PLUG VALVE		CALIBRATED ORIFICE PLATE FLOW METER
	SPRING HANGER		THERMOMETER
	PIPE HANGER		PRESSURE GAUGE
	CAP		CONCENTRIC REDUCER OR INCREASER
	PIPE RISE		ECCENTRIC REDUCER
	PIPE DROP		TOP CONNECTION, 45° OR 90°
	UNION OR FLANGE CONNECTION		BOTTOM CONNECTION, 45° OR 90°
	DIRECTION OF FLOW		SIDE CONNECTION
	ANCHOR		CAPPED OUTLET
	DOMESTIC COLD WATER LINE (CW)		ABOVE FLOOR WASTE LINE (W)
	DOMESTIC HOT WATER LINE (HW)		BELOW WASTE LINE (W)
	HOT WATER RECIRC LINE (HWC)		PLUMBING VENT LINE (V)
F	FIRE PROTECTION LINE (F)	RL	RAIN LEADER (RL)
CA	COMPRESSED AIR (CA)	ORL	OVERFLOW RAIN LEADER (ORL)
TW	DOMESTIC TEMPERED WATER LINE (TW)	SWS	STORM SEWER (SWS)
FCW	FILTERED COLD WATER LINE (FCW)	FS	FUEL SUPPLY
SCW	SOFT COLD WATER LINE (SCW)	UF	UNUSABLE FUEL
RO	REVERSE OSMOSIS PURE WATER SUPPLY LINE (RO)	FOS	FUEL OIL SUPPLY
ROR	REVERSE OSMOSIS PURE WATER RETURN LINE (ROR)	FOR	FUEL OIL RETURN
DI	DEIONIZED PURE WATER SUPPLY (DI)	FOG	FUEL OIL GAUGE
IW	INDUSTRIAL WASTE	TOP	TOP OF PIPE ELEVATION ABOVE FLOOR
G	NATURAL GAS LINE (G)	RD	ROOF DRAIN
CD	COOLING COIL CONDENSATE DRAIN LINE (CD)	ORD	OVERFLOW ROOF DRAIN
VTR	VENT THROUGH ROOF	CI	CAST IRON
FD	FLOOR DRAIN	VCP	VITRIFIED CLAY PIPE
CO	CLEANOUT (FLOOR)	PVC	POLYVINYL CHLORIDE PIPE
CO	2-WAY CLEANOUT (FLOOR)	TD	TRENCH DRAIN
WCO	WALL CLEANOUT	WH	WALL HYDRANT
CO	END OF LINE CLEANOUT	WH-#	WATER HEATER CALLOUT
P-#	PLUMBING FIXTURE CALLOUT	F/S	FILTER-SEPARATOR
WHA#	WATER HAMMER ARRESTOR - PDI SIZE	FS	FLOOR SINK
FL	FLOW LINE ELEVATION	FHC	FIRE HOSE CABINET
HR	HOSE REEL	BOP	BOTTOM OF PIPE ELEVATION ABOVE FLOOR
HB	HOSE BIBB	DHWP	DOMESTIC HOT WATER PUMP
TMV	THERMOSTATIC MIXING VALVE		
O2	MEDICAL OXYGEN LINE (O2)	NO	NITROUS OXIDE LINE (NO)
MV	MEDICAL VACUUM LINE (MV)	WAGD	WASTE ANESTHESIA GAS DISPOSAL (WAGD)
MA	MEDICAL COMPRESSED AIR LINE (MA)		
LPS	LOW PRESSURE (<30psig) STEAM (LPS)	HPS	HIGH PRESSURE (>150psig) STEAM (HPS)
LPR	LOW PRESSURE (<30psig) CONDENSATE RETURN (LPR)	HPR	HIGH PRESSURE (>150psig) CONDENSATE RETURN (HPR)
MPS	MEDIUM PRESSURE (30-150psig) STEAM (MPS)		STEAM TRAP (ST)
MPR	MEDIUM PRESSURE (30-150psig) CONDENSATE RETURN (MPR)		

NOT ALL MAY BE USED ON PROJECT

GENERAL NOTES

1. VERIFY JOB SITE CONDITIONS AND DIMENSIONS BEFORE BEGINNING WORK. PLANS ARE SCHEMATIC IN NATURE. LAYOUT IS BASED ON BEST AVAILABLE INFORMATION. CONTRACTOR SHALL FIELD VERIFY EXISTING CONDITIONS AND DIMENSIONS.
2. NO PIPING, DUCTWORK, ETC. SHALL PENETRATE STRUCTURAL MEMBERS.
3. PROVIDE MISCELLANEOUS CUTTING, PATCHING AND REPAIRING OF FINISHES, ROOF, WALLS, ETC., AS REQUIRED TO ACCOMMODATE THE NEW WORK.
4. G.C. IS TO PATCH ANY OPENINGS IN CORRIDORS REQUIRED TO BE CONSTRUCTED TO LIMIT THE TRANSFER OF SMOKE AND IN SMOKE BARRIERS AS REQUIRED TO MEET CODE REQUIREMENTS. SEE ARCHITECTURAL DRAWINGS FOR LOCATIONS.
5. IT IS THE CONTRACTOR'S RESPONSIBILITY TO FIELD VERIFY EXACT LOCATION, CONFIGURATION AND ROUTING OF EXISTING SYSTEMS REQUIRED TO REMAIN IN OPERATION DURING THE PROJECT TO PREVENT DAMAGE DURING DEMOLITION AND PHASING.
6. REMOVE ALL EXISTING EQUIPMENT, DUCTWORK AND PIPING THAT IS NOT REQUIRED FOR A WORKING INSTALLATION.
7. COORDINATE ALL WORK WITH OTHER TRADES PRIOR TO INSTALLATION.
8. UNLESS OTHERWISE INDICATED, INSTALL ALL SPACE THERMOSTATS AND OTHER OCCUPANT ADJUSTABLE CONTROL DEVICES SAME HEIGHT AS ADJACENT LIGHT SWITCHES, BUT IN NO CASE HIGHER THAN 48 INCHES ABOVE FINISHED FLOOR PER ADA REQUIREMENTS. COORDINATE EXACT HEIGHT WITH ARCHITECT PRIOR TO INSTALLATION.
9. ALL CUTTING AND PATCHING SHALL BE CLOSELY COORDINATED WITH THE G.C.
10. COORDINATE ROUTING OF PLUMBING, AND HVAC PIPING WITH DUCTWORK, LIGHTS, ARCHITECTURAL CEILING AND STRUCTURAL ELEMENTS. PIPING SHALL RISE AND DROP, JOG OR OFFSET AS REQUIRED TO AVOID CONFLICTS. DUCTWORK SHALL TAKE PRECEDENCE OVER ALL PIPING, EXCEPT WHERE GRADE MUST BE MAINTAINED FOR DRAINAGE. REWORK OF INSTALLED WORK TO RESOLVE CONFLICTS RISING FROM LACK OF COORDINATION SHALL NOT JUSTIFY AN INCREASE IN THE CONTRACT AMOUNT.
11. ALL DIFFUSERS ARE 4-WAY BLOW UNLESS INDICATED OTHERWISE ON THE DRAWINGS.
12. FLEXIBLE DUCTWORK IS ALLOWED ON RUNOUTS TO SUPPLY DIFFUSERS ONLY. UTILIZE ONLY ABOVE LAY-IN ACCESSIBLE CEILINGS. DO NOT INSTALL FLEX DUCT ABOVE HARD CEILINGS OR WHERE EXPOSED. A MAXIMUM LENGTH OF 6'-0" MAY BE USED AT EACH CONNECTION.
13. SEAL DUCTWORK AS CALLED OUT BELOW USING HARDCAST DT TAPE AND FTA-20 ADHESIVE OR HARDCAST AFG-1402 "FOIL GRIP" PER MANUFACTURERS INSTRUCTIONS. SEAL TO SMACNA SEAL CLASS A:

TYPE OF DUCT	APPLY TO JOINTS
EXHAUST DUCT (ROUND OR RECT)	TRANSVERSE AND LONGITUDINAL
MEDIUM VELOCITY (ROUND)	TRANSVERSE AND LONGITUDINAL
MEDIUM VELOCITY (RECTANGULAR)	TRANSVERSE AND LONGITUDINAL
LOW VELOCITY SUPPLY AND RETURN (RECT)	TRANSVERSE AND LONGITUDINAL
LOW VELOCITY SUPPLY (ROUND)	TRANSVERSE AND LONGITUDINAL

14. INSTALL BALANCE DAMPER WITH STANDOFF AND LOCKING QUADRANT IN AN ACCESSIBLE LOCATION AT EACH RUNOUT TO SUPPLY DIFFUSERS, EXHAUST GRILLES, AND RETURN GRILLES WHERE AIRFLOW IS INDICATED, OR AS INDICATED OTHERWISE.
15. ALL PENETRATIONS THROUGH FIRE RATED ASSEMBLIES SHALL BE FIRE STOPPED BY THE TRADE MAKING THE PENETRATION. REFER TO ARCHITECTURAL DRAWINGS AND SPECIFICATIONS FOR REQUIREMENTS.
16. DO NOT ROUTE PIPING OR DUCTWORK OVER ELECTRICAL PANELS OR EQUIPMENT. PIPING OR DUCTWORK SHALL NOT BE ROUTED THROUGH ELECTRICAL ROOMS, TELECOM ROOMS OR ELEVATOR EQUIPMENT ROOMS UNLESS SPECIFICALLY SERVING THAT ROOM. COORDINATE WITH E.C. PROVIDE WATERTIGHT DRIP PAN WITH DRAIN TO NEAREST APPROVED RECEPTOR WHERE REQUIRED.
17. COORDINATE SIZE AND LOCATION OF ACCESS DOORS IN CONSTRUCTION REQUIRED FOR ACCESS TO MECHANICAL EQUIPMENT WITH G.C.
18. COORDINATE SIZE AND LOCATION OF MECHANICAL EQUIPMENT PADS WITH G.C.
19. ALL WORK IS TO CONFORM WITH APPLICABLE CODES AND STANDARDS.
20. DUCT SIZES SHOWN ARE ACTUAL INSIDE CLEAR DIMENSIONS. INCREASE SHEET METAL DIMENSIONS AS REQUIRED TO ACCOMMODATE DUCT LINER WHERE LINER IS SPECIFIED.
21. ALL EQUIPMENT SUPPORT STANDS SHALL BE PRIMED AND PAINTED WITH EPOXY ENAMEL.
22. REFER TO ARCHITECTURAL REFLECTED CEILING PLANS FOR EXACT LOCATION OF ALL CEILING MOUNTED AIR DISTRIBUTION DEVICES.
23. PAINT INSIDE OF DUCTWORK BLACK ANYWHERE VISIBLE THROUGH FACE OF GRILLE OR DIFFUSER.
24. WHERE HYDRONIC RUNOUT SIZES ARE NOT INDICATED, SIZE PER THE FOLLOWING:
    UP TO 1 GPM - 1/2"; UP TO 3 GPM - 3/4"; UP TO 6 GPM - 1"; UP TO 10 GPM - 1-1/4"; UP TO 17 GPM - 1-1/2"
25. HYDRONIC PIPING SHALL BE MAINTAINED FULL SIZE UP TO COIL CONNECTIONS. SHUT-OFF VALVES, STRAINERS, BALANCE VALVES, ETC. WILL NOT BE ALLOWED TO REDUCE FROM LINE/RUNOUT SIZE. CONTROL VALVES MAY BE DOWN SIZED FOR FLOW RATE, NOT TO EXCEED 4 PSIG PRESSURE DROP AT DESIGN FLOW.
26. UNDERGROUND-TYPE UTILITY MARKER: PROVIDE A CAST ALUMINUM UTILITY MARKER AT EVERY 100 FEET FOR ALL UNDERGROUND UTILITIES (INCLUDING HEAT PUMP WELL FIELD). 4"x7" TOP WITH 10" MINIMUM SPIKE; LABEL WITH THE APPROPRIATE UTILITY. EACH VERTICAL GROUND SOURCE HEAT PUMP WELL/BORE SHALL BE LABELED "GCHP WELL #X WITH APPROPRIATE NUMERIC WELL NUMBER IDENTIFICATION. MARKERS AS MANUFACTURED BY LAKE SHORE MARKERS, ERIE, PENNSYLVANIA.
27. TEMPERATURE CONTROLS CONTRACTOR (TCC) SHALL FURNISH AND INSTALL ALL LOW VOLTAGE WIRING AND ASSOCIATED CONDUIT REQUIRED FOR MECHANICAL CONTROL SYSTEM. WIRING SHALL BE IN CONDUIT INSIDE WALLS, IN ROOMS WITH EXPOSED CEILINGS, AND ABOVE HARD CEILINGS. LINE VOLTAGE WIRING AND ASSOCIATED CONDUIT SHALL BE PROVIDED AND INSTALLED BY E.C. CONTROL SYSTEM SHALL BE INSTALLED IN ACCORDANCE WITH SPECIFICATIONS.
28. ALL CONTROL DAMPERS SHALL BE FURNISHED BY TCC AND INSTALLED BY THE MC. MOTOR OPERATORS SHALL BE FURNISHED AND INSTALLED BY THE TCC.
29. COORDINATE ACCESS TO EQUIPMENT AND VALVES INSTALLED ABOVE 'HARD' CEILINGS AND IN MASONRY CHASES WITH GENERAL CONTRACTOR. PROVIDE LOCKING ACCESS DOORS FOR INSTALLATION BY CONTRACTOR AS REQUIRED TO SERVICE CONCEALED DAMPERS, VALVES AND EQUIPMENT. CEILING ACCESS DOORS FOR FIRE DAMPERS, SMOKE DAMPERS AND FIRE SMOKE DAMPERS FURNISHED AND INSTALLED BY CONTRACTOR.
30. CONTRACTOR TO INSTALL TEMPORARY FILTERS OVER ALL RETURN AND EXHAUST GRILLES IN WORK AREA DURING CONSTRUCTION.
31. THESE DRAWINGS ARE ACCOMPANIED BY SPECIFICATIONS. REFER TO SPECIFICATIONS FOR FURTHER INFORMATION.
32. EQUIPMENT THAT REQUIRES MAINTENANCE SHALL BE LOCATED A MINIMUM OF 10'-0" FROM THE BUILDING ROOF EDGE WHERE REQUIRED BY CODE.
33. REFER TO ARCHTIECTURAL DRAWINGS FOR LOCATIONS OF TEMPORARY PARTITIONS.

NOTE: NOT ALL MAY APPLY ON PROJECT.

GENERAL DEMOLITION NOTES

1. VERIFY ALL EXISTING CONDITIONS PRIOR TO BEGINNING WORK. BRING ANY DISCREPANCIES FROM THE DRAWINGS AND NOTES TO THE ARCHITECT IMMEDIATELY. MINOR CHANGES IN THE SCOPE OF THE DEMOLITION WORK SHALL NOT JUSTIFY AN ADDITIONAL COST.
2. REMOVAL OF EXISTING FIXTURES AND EQUIPMENT WILL REQUIRE ISOLATING THE PIPING RISERS OR MAINS VIA SHUT-OFF VALVES. INSTALL NEW ISOLATION VALVES WHERE REQUIRED FOR COMPLETION OF WORK.
3. REMOVAL OF EXISTING PLUMBING FIXTURES AND EQUIPMENT, ETC. WILL REQUIRE CAPPING AND SEALING EXISTING MAINS OR BRANCHES AS NECESSARY AND REQUIRED TO ALLOW THE REMAINING SYSTEMS TO FULLY OPERATE WITHOUT DEGRADATION.
4. CONTRACTOR SHALL PROVIDE PROTECTIVE PLASTIC DROP CLOTHS TO PROTECT THE EXISTING OCCUPIED AREAS AND EQUIPMENT FROM DUST AND DEBRIS DURING THE CONSTRUCTION WORK, AND SHALL CLEAN THE AREAS OF ALL CONSTRUCTION DIRT DAILY, AND UPON COMPLETION OF THE WORK.
5. ALL DRAINED PIPING RISERS AND MAINS SHALL BE REFILLED WITH PROPER FLUID AND PROPERLY VENTED BY THIS CONTRACTOR, ONCE NEW WORK HAS BEEN INSTALLED.
6. COORDINATE WITH GENERAL CONTRACTOR THE REMOVAL AND REPLACEMENT OF ALL EXISTING CEILINGS, WALLS, ETC. AS REQUIRED FOR MECHANICAL DEMOLITION WORK.
7. EXISTING PIPING AND EQUIPMENT, ETC., NOT TO BE UTILIZED IN THE COMPLETED BUILDING SHALL BE DISCONTINUED OR REMOVED AS REQUIRED. ALL ENDS OF DISCONTINUED PIPING SHALL BE CAPPED IN THE NEAREST WALL, CEILING OR FLOOR SO THAT THEY ARE COMPLETELY CONCEALED. OPENINGS LEFT IN WALLS, CEILINGS, ETC., WHERE EQUIPMENT AND PIPE, ETC., ARE REMOVED AND NOT REPLACED, SHALL BE PATCHED NEATLY WITH SIMILAR MATERIAL TO ADJACENT CONSTRUCTION. REFER TO DRAWINGS DELINEATING NEW WORK FOR ADDITIONAL INFORMATION REGARDING SYSTEMS OR PORTIONS OF SYSTEMS WHERE USE IS TO BE DISCONTINUED.
8. EXISTING PIPING, FIXTURES AND EQUIPMENT THAT ARE NOT TO BE REUSED SHALL BE REMOVED AND SHALL REMAIN THE PROPERTY OF THE OWNER IF THEY WISH TO RETAIN OWNERSHIP OF SAME. IF NOT, EQUIPMENT SHALL BECOME THE PROPERTY OF THIS CONTRACTOR AND SHALL BE REMOVED FROM THE SITE AS SOON AS PRACTICAL AND DISPOSED OF IN ACCORDANCE WITH APPLICABLE LAWS AND REGULATIONS.
9. ALL CUTTING AND CHANNELING OF EXISTING BUILDING SHALL BE ACCOMPLISHED IN A NEAT AND WORKMANLIKE MANNER WITHOUT REMOVAL OF EXCESS MATERIALS. THIS CONTRACTOR SHALL PATCH AND REPLACE WITH MATERIAL SIMILAR TO ADJACENT CONSTRUCTION.
10. WHERE EXISTING PIPING AND EQUIPMENT, ETC., THAT ARE TO BE UTILIZED IN THE COMPLETED PROGRAM CONFLICT WITH NEW CONSTRUCTION AND THE REQUIRED DEMOLITION, THEY SHALL BE RELOCATED AND RECONNECTED TO MAINTAIN THE DESIRED SERVICE.
11. PORTIONS OF EXISTING SYSTEMS MAY BE SHOWN FOR CLARITY EVEN THOUGH IT MAY NOT BE NECESSARY TO MODIFY OR REVISE THEM. ALL EXISTING SYSTEMS ARE SHOWN BASED ON ORIGINAL OR REMODEL BUILDING DRAWINGS. CONTRACTOR TO VERIFY ALL EXISTING CONDITIONS.
12. ALL WORK MUST BE COORDINATED AND SCHEDULED WITH THE OWNER AND OCCUPANTS OF THIS BUILDING SO AS TO PROVIDE THE LEAST AMOUNT OF DISRUPTION OF BUILDING ACTIVITIES AS POSSIBLE. MAINTAIN CONDITIONED SPACE FOR ALL OWNER OCCUPIED AREAS DURING CONSTRUCTION.
13. ALL ACCESSIBLE ABANDONED PIPING AND DUCTWORK SHALL BE REMOVED AND PROPERLY DISPOSED OF.

NOTE: NOT ALL MAY APPLY TO PROJECT

DRAWING SYMBOLS

EQUIPMENT CALLOUT

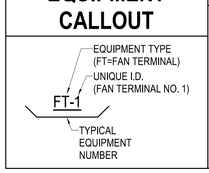

SECTIONS

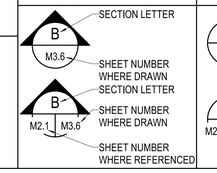

DETAILS

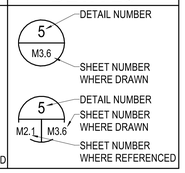

HVAC DESIGN CONDITIONS

SPACE OR AREA	OUTDOOR AIR		INDOOR HEATING °F	INDOOR COOLING °F	RELATIVE HUMIDITY %RH	MODES	NOTES
	SUMMER DB/WB	WINTER DB					
CORRIDOR	96.4 F	-1 F	72	72	50		
EQUIPMENT ROOM	96.4 F	-1 F	68	68	50		
HYBRID OR	96.4 F	-1 F	62	62	50		
STORAGE ROOM	96.4 F	-1 F	72	72	50		

SEISMIC RESTRAINTS:

THIS IS A LIFE SAFETY BUILDING WHICH MEANS IT SHALL REMAIN REASONABLY OPERATIONAL IN THE CASE OF A SEISMIC EVENT. THEREFORE ALL STATIONARY EQUIPMENT ON THE FLOOR AND ALL CONCRETE PADS SHALL BE FIXED RIGIDLY TO THE STRUCTURE. ALL ROTATING OR RECIPROCATING OR VIBRATING EQUIPMENT SHALL BE INSTALLED WITH EARTHQUAKE SNUBBERS TO LIMIT MOVEMENT. ALL HANGING EQUIPMENT, PIPING, AND DUCTWORK SHALL BE BRACED TO THE STRUCTURE. REFER TO SPECIFICATION SECTIONS 21 0548, 22 0548, AND 23 0548.

SHEET LIST

FP1.10	FIRE PROTECTION FLOOR PLAN
MP1.0	MECHANICAL COVER SHEET
PD1.0	PLUMBING DEMOLITION FLOOR PLAN
P1.0	PLUMBING FLOOR PLANS
P1.1	MEDICAL GAS FLOOR PLAN
MD1.0	HVAC DEMOLITION FLOOR PLAN
M1.0	HVAC FLOOR PLANS
M2.0	MECHANICAL HYDRONICS & ROOF PLAN
M3.0	MECHANICAL DETAILS
M3.1	MECHANICAL DETAILS
M4.0	CONTROL DIAGRAMS
M4.1	CONTROL DIAGRAMS
M5.0	MECHANICAL SCHEDULES
M5.1	MECHANICAL SCHEDULES
MR1.0	AIRFLOW DIAGRAM

STATE OF MISSOURI
BRANDON W. OLAASSEN
NUMBER PE-2019000019
2020-03-23
PROFESSIONAL ENGINEER

ACI BOLAND ARCHITECTS
1710 Wyandotte
Kansas City, MO 64108
T: 816.763.9600

ACI/Boland, Inc.
Kansas City | St. Louis
Licensee's Certificate of Authority Number:

STRUCTURAL, MECHANICAL, ELECTRICAL, & PLUMBING CONSULTANT

PEC
Professional Engineering Consultants, P.A.
623 Massachusetts Street, Suite 200
Lawrence, KS 66044
State Certificate of Authority: #000465F
Phone Number: 785.842.6464

Lee's Summit Medical Center
Hybrid OR Addition
2100 SE Blue Parkway
Lee's Summit, MO 64063

Date	3-23-2020
Job Number	3-19058
Drawn By	DBB
Checked By	SPH

Revision

Number	Date	Description

MP1.0

© 2020 ACI/BOLAND, Inc

MECHANICAL COVER SHEET

3/23/2020 10:49:20 AM
BIM 360://190711-000 - Lee's Summit Med Cntr Hybrid OR Addn/190711-000-MASTER MECH-R19.rvt

AIR BALANCE SCHEDULE

SYSTEM	SUPPLY	RETURN	EXHAUST	OFFSET	OA	% OA
RTU-01	5950	4800	850	300	1150	19

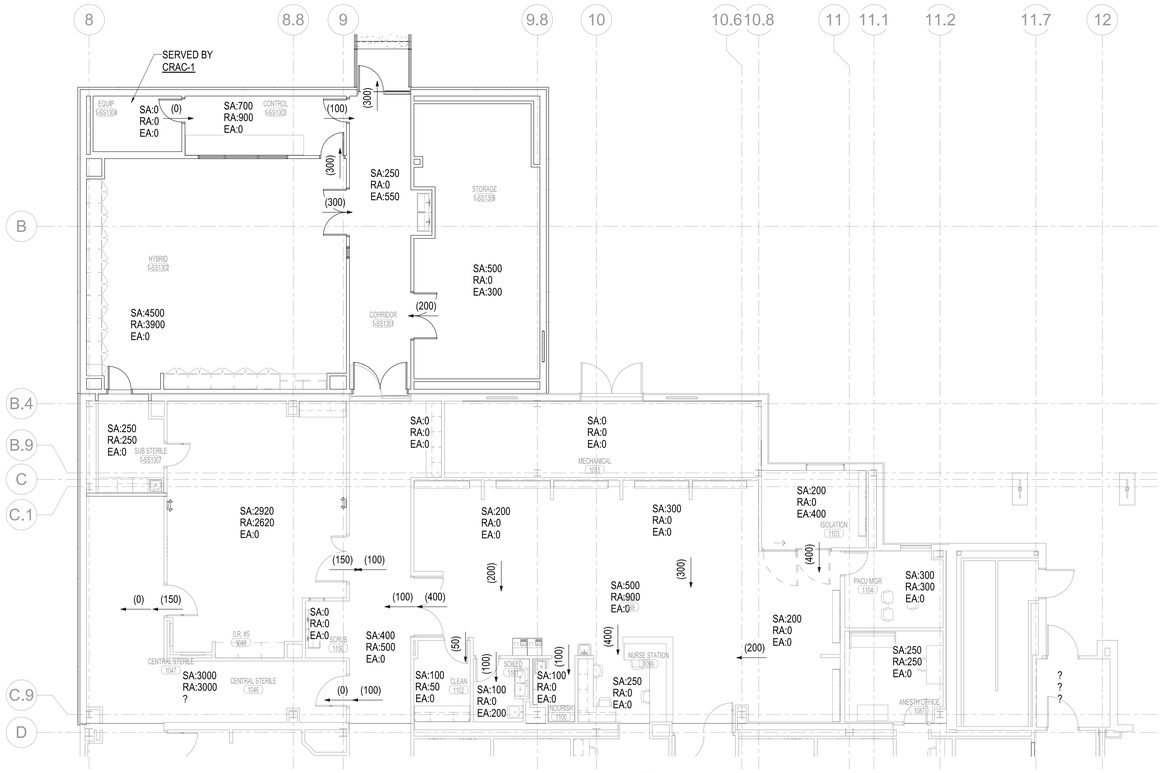

1 AIRFLOW DIAGRAM
1/8" = 1'-0"

NORTH

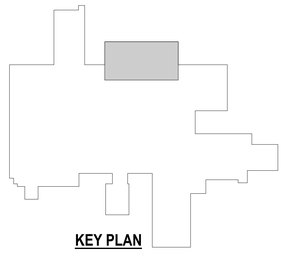

KEY PLAN

STATE OF MISSOURI
BRANDON W. GLASSER
NUMBER
PE-2019000019
2020-03-23
PROFESSIONAL ENGINEER

ACI BOLAND ARCHITECTS

1710 Wyandotte
Kansas City, MO 64108
T: 816.763.9600

ACI/Boland, Inc.
Kansas City | St. Louis
Licensee's Certificate of Authority Number:

STRUCTURAL, MECHANICAL, ELECTRICAL, & PLUMBING CONSULTANT

PEC

Professional Engineering Consultants, P.A.
623 Massachusetts Street, Suite 200
Lawrence, KS 66044
State Certificate of Authority: #000465F
Phone Number: 785.842.6464

Lee's Summit Medical Center

Hybrid OR Addition
2100 SE Blue Parkway
Lee's Summit, MO 64063

Date	3-23-2020
Job Number	3-19058
Drawn By	DBB
Checked By	SPH

Revision

Number	Date	Description

MR1.0

© 2020 ACI/BOLAND, Inc

AIRFLOW DIAGRAM

3/23/2020 10:49:24 AM
BIM 360://190711-000 - Lee's Summit Med Cntr Hybrid OR Addn/190711-000-MASTER MECH-R19.rvt

3/23/2020 10:49:31 AM

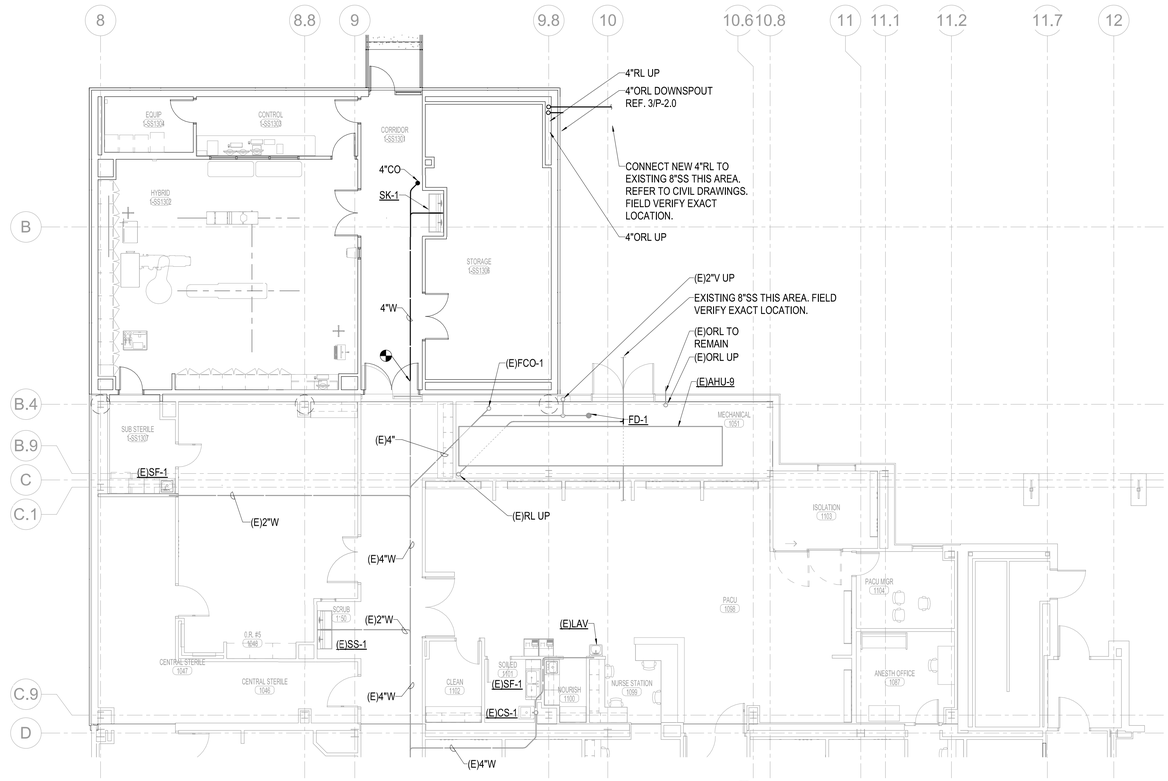

1 PLUMBING BELOW GRADE FLOOR PLAN
1/8" = 1'-0"
NORTH

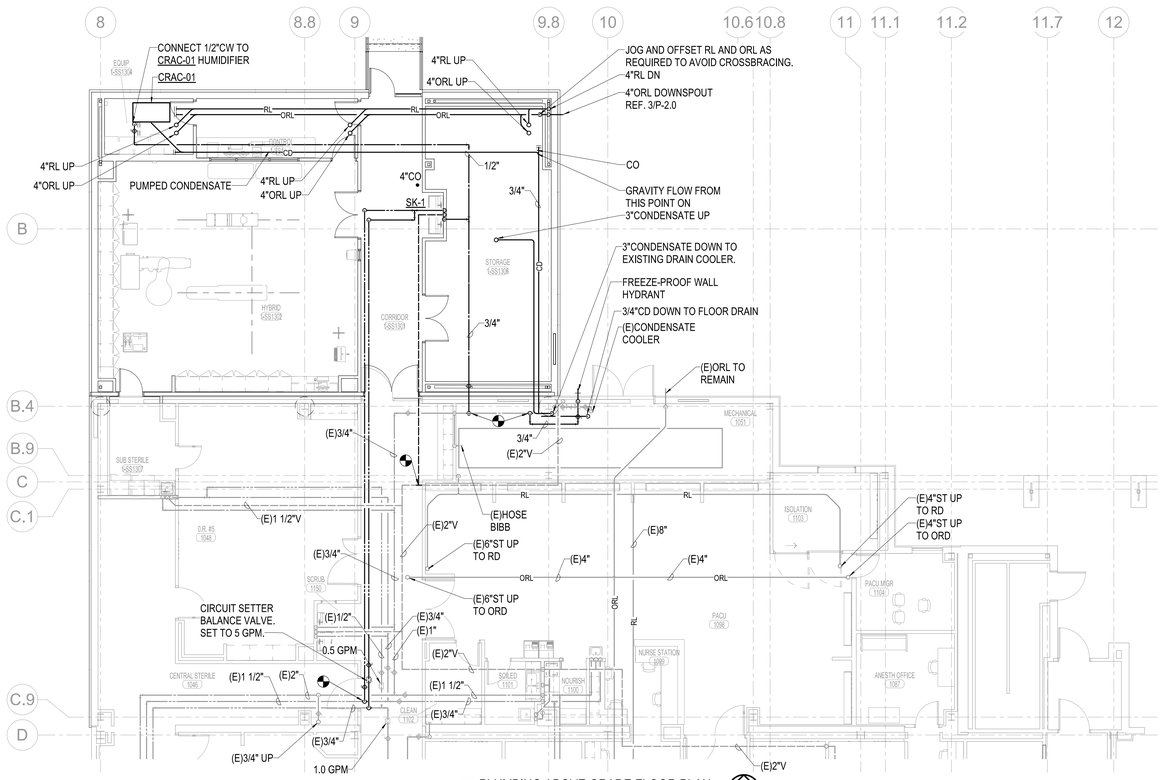

2 PLUMBING ABOVE GRADE FLOOR PLAN
1/8" = 1'-0"
NORTH

PLUMBING GENERAL NOTES:

1. PLANS ARE SCHEMATIC IN NATURE. LAYOUT IS BASED ON BEST AVAILABLE INFORMATION. CONTRACTOR SHALL FIELD VERIFY EXISTING CONDITIONS AND DIMENSIONS.
2. ALL CUTTING, PATCHING AND DEMOLITION WORK SHALL BE CLOSELY COORDINATED WITH THE EXISTING CONDITIONS AND THE REQUIRED NEW WORK. G.C. SHALL PATCH AND FINISH PENETRATIONS OF EXISTING SURFACES TO MATCH ADJACENT SURFACES.
3. FIELD VERIFY BEST ROUTING FOR NEW PIPING AND DUCTWORK. COORDINATE WITH EXISTING EQUIPMENT, PIPING AND DUCTWORK. NEW PIPING SHALL RISE AND DROP, JOG OR OFFSET AS REQUIRED TO AVOID CONFLICTS. DUCTWORK SHALL TAKE PRECEDENCE OVER ALL PIPING, EXCEPT WHERE GRADE MUST BE MAINTAINED FOR DRAINAGE. ANY EXPENSES RISING FROM LACK OF COORDINATION SHALL BE MADE AT THE CONTRACTOR'S EXPENSE.
4. REFER TO ARCHITECTURAL SPECIFICATIONS AND PLANS FOR PHASING OF DEMOLITION AND NEW WORK. ADJACENT AREAS ARE 100% OCCUPPIED AND CONTRACTOR SHALL WORK CLOSELY WITH OWNER TO SCHEDULE DEMOLITION AND CONSTRUCTION TO BE AS LEAST DISRUPTIVE AS POSSIBLE.

PLUMBING FIXTURE SCHEDULE

MARK	FIXTURE	WATER				WASTE		VENT	REMARKS
		COLD		HOT		RUNOUT	CONN.		
		RUNOUT	CONN.	RUNOUT	CONN.				
SK-1	SCRUB SINK	1/2"	1/2"	1/2"	1/2"	2"	1-1/4"	1-1/2"	

PLUMBING FIXTURE LIST

SK-1: SCRUB SINK
WHITEHALL #4102, 63-1/2"x27", DUAL STATION, TYPE 304 STAINLESS STEEL, POLISHED SATIN FINISH WITH WALL MOUNTING CARRIER, FLAT GRID STRAINERS AND TAILPIECES, MOUNT RIM @ 40" AFF. FAUCETS KNEE ACTIVATED, DIGITAL TIME DISPLAY, FACE MOUNT, SURGICAL BEND GOOSENECK SPOUT, SENSOR OPERATED, 120 VAC/24 PLUG-IN TRANSFORMER, T&P MIXING VALVE ADJUSTABLE AT BACKSPLASH AND FILTERED SOLENOID VALVES.

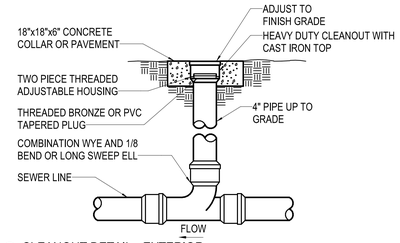

3 CLEANOUT DETAIL - EXTERIOR
NO SCALE

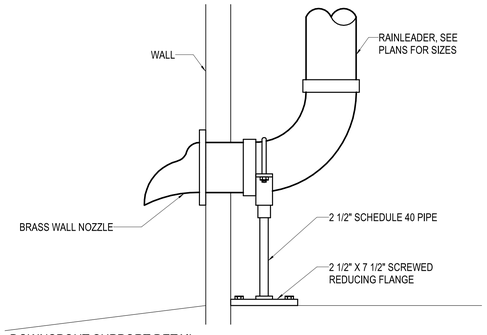

4 DOWNSPOUT SUPPORT DETAIL
NO SCALE

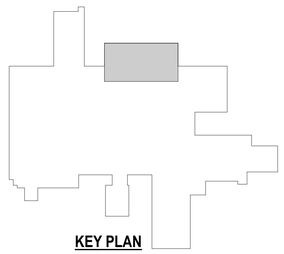

KEY PLAN

STATE OF MISSOURI
BRANDON W. GLASSEN
NUMBER
PE-2019000019
2020-03-23
PROFESSIONAL ENGINEER

ACI BOLAND ARCHITECTS
1710 Wyandotte
Kansas City, MO 64108
T: 816.763.9600

ACI/Boland, Inc.
Kansas City | St. Louis
Licensee's Certificate of Authority Number:

STRUCTURAL, MECHANICAL, ELECTRICAL, & PLUMBING CONSULTANT

PEC
Professional Engineering Consultants, P.A.
623 Massachusetts Street, Suite 200
Lawrence, KS 66044
State Certificate of Authority: #000465F
Phone Number: 785.842.6464

Lee's Summit Medical Center

Hybrid OR Addition
2100 SE Blue Parkway
Lee's Summit, MO 64063

Date	3-23-2020
Job Number	3-19058
Drawn By	DBB
Checked By	SPH

Revision

Number	Date	Description

P1.0

© 2020 ACI/BOLAND, Inc

PLUMBING FLOOR PLANS

BIM 360://190711-000 - Lee's Summit Med Cntr Hybrid OR Addn/190711-000-MASTER MECH-R19.rvt

MEDICAL GAS CONNECTION SCHEDULE

REMARKS:
1. WHERE ZONE VALVE BOXES OR AREA ALARM PANELS ARE LOCATED IN SMOKE WALL, PROVIDE APPROPRIATE PROTECTION AROUND THE BOX TO MAINTAIN THE RATING.
2. INDICATE ABNORMAL PRESSURE.

EQUIPMENT CALLOUT	LOC	SERVING ROOM	PIPING CONNECTIONS					ALARM SIGNAL				
			OXYGEN	VACUUM	MEDICAL AIR	WAGD	NITROUS OXIDE	OXYGEN	VACUUM	MEDICAL AIR	WAGD	NITROUS OXIDE
ZVB-01	CORRIDOR 1-SS1301	HYBRID 1-SS1302	3/4"	3/4"	3/4"	3/4"	3/4"					
AREA ALARM-01	CORRIDOR 1-SS1301	HYBRID 1-SS1302						2	2	2	2	2

MEDICAL GAS OUTLET SCHEDULE

REMARKS:
1. MINIMUM RUNOUT SIZE TO BRANCH MAIN TO BE 1/2" FOR OXYGEN AND MED AIR; 3/4" FOR VAC.

MARK	DESCRIPTION	OXYGEN (O)	VAC (VAC)	MEDICAL AIR (MA)	WASTE ANETH. DISPOSAL (WAGD)	NITROUS OXIDE (NO)	REMARKS
MGO-01	BOOM CONNECTION	2	2	1	1	1	1

PLUMBING GENERAL NOTES:

1. PLANS ARE SCHEMATIC IN NATURE. LAYOUT IS BASED ON BEST AVAILABLE INFORMATION. CONTRACTOR SHALL FIELD VERIFY EXISTING CONDITIONS AND DIMENSIONS.
2. ALL CUTTING, PATCHING AND DEMOLITION WORK SHALL BE CLOSELY COORDINATED WITH THE EXISTING CONDITIONS AND THE REQUIRED NEW WORK. G.C. SHALL PATCH AND FINISH PENETRATIONS OF EXISTING SURFACES TO MATCH ADJACENT SURFACES.
3. FIELD VERIFY BEST ROUTING FOR NEW PIPING AND DUCTWORK. COORDINATE WITH EXISTING EQUIPMENT, PIPING AND DUCTWORK. NEW PIPING SHALL RISE AND DROP, JOG OR OFFSET AS REQUIRED TO AVOID CONFLICTS. DUCTWORK SHALL TAKE PRECEDENCE OVER ALL PIPING, EXCEPT WHERE GRADE MUST BE MAINTAINED FOR DRAINAGE. ANY EXPENSES RISING FROM LACK OF COORDINATION SHALL BE MADE AT THE CONTRACTOR'S EXPENSE.
4. REFER TO ARCHITECTURAL SPECIFICATIONS AND PLANS FOR PHASING OF DEMOLITION AND NEW WORK. ADJACENT AREAS ARE 100% OCCUPPIED AND CONTRACTOR SHALL WORK CLOSELY WITH OWNER TO SCHEDULE DEMOLITION AND CONSTRUCTION TO BE AS LEAST DISRUPTIVE AS POSSIBLE.

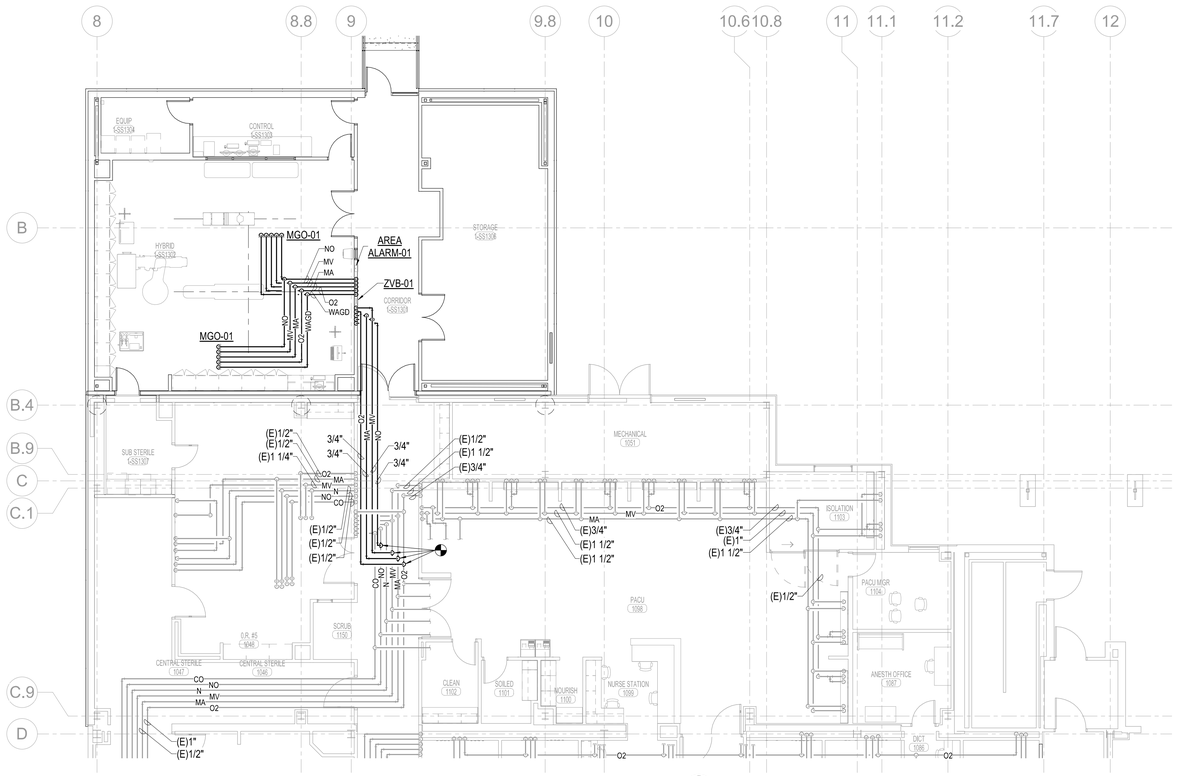

1 MEDICAL GAS FLOOR PLAN
1/8" = 1'-0"

NORTH

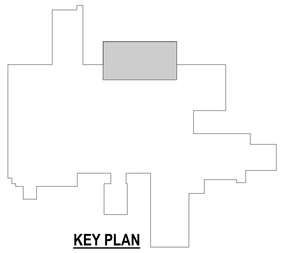

KEY PLAN

STATE OF MISSOURI
BRANDON W. GLASSEN
NUMBER PE-2019000019
2020-03-23
PROFESSIONAL ENGINEER

ACI BOLAND ARCHITECTS

1710 Wyandotte
Kansas City, MO 64108
T: 816.763.9600

ACI/Boland, Inc.
Kansas City | St. Louis
Licensee's Certificate of Authority Number:

STRUCTURAL, MECHANICAL, ELECTRICAL, & PLUMBING CONSULTANT

PEC

Professional Engineering Consultants, P.A.
623 Massachusetts Street, Suite 200
Lawrence, KS 66044
State Certificate of Authority: #000465F
Phone Number: 785.842.6464

Lee's Summit Medical Center

Hybrid OR Addition
2100 SE Blue Parkway
Lee's Summit, MO 64063

Date	3-23-2020
Job Number	3-19058
Drawn By	DBB
Checked By	SPH

Revision

Number	Date	Description

P1.1

© 2020 ACI/BOLAND, Inc

MEDICAL GAS FLOOR PLAN

3/23/2020 10:49:38 AM
BIM 360://190711-000 - Lee's Summit Med Cntr Hybrid OR Addn/190711-000-MASTER MECH-R19.rvt

3/23/2020 10:49:42 AM

PLUMBING DEMOLITION GENERAL NOTES:

1. PLANS ARE SCHEMATIC IN NATURE. LAYOUT IS BASED ON BEST AVAILABLE INFORMATION. CONTRACTOR SHALL FIELD VERIFY EXISTING CONDITIONS AND DIMENSIONS.
2. ALL CUTTING, PATCHING AND DEMOLITION WORK SHALL BE CLOSELY COORDINATED WITH THE EXISTING CONDITIONS AND THE REQUIRED NEW WORK. G.C. SHALL PATCH AND FINISH PENETRATIONS OF EXISTING SURFACES TO MATCH ADJACENT SURFACES.
3. ALL PIPING TO BE REMOVED SHALL BE CAPPED AT THE MAINS UNLESS OTHERWISE NOTED.
4. ALL ACCESSIBLE ABANDONED PIPING SHALL BE REMOVED.
5. REFER TO ARCHITECTURAL SPECIFICATIONS AND PLANS FOR PHASING OF DEMOLITION AND NEW WORK. ADJACENT AREAS ARE 100% OCCUPIED AND CONTRACTOR SHALL WORK CLOSELY WITH OWNER TO SCHEDULE DEMOLITION AND CONSTRUCTION TO BE AS LEAST DISRUPTIVE AS POSSIBLE.

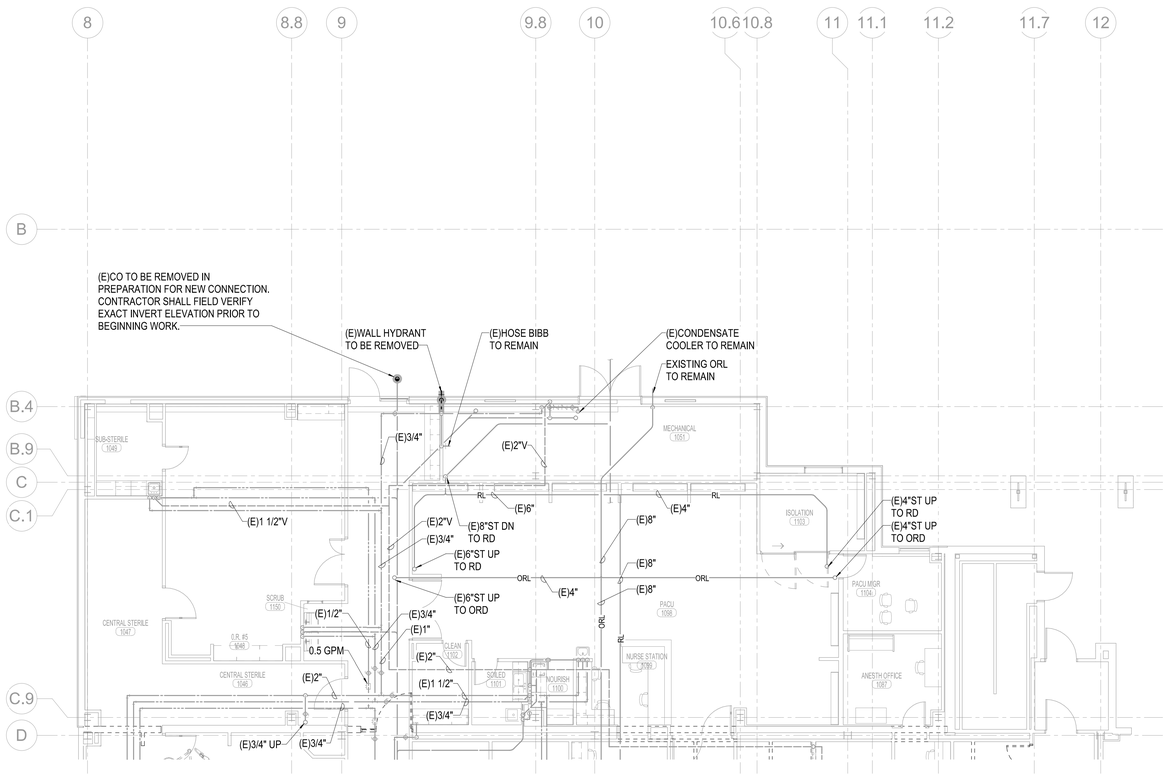

1 PLUMBING DEMOLITION FLOOR PLAN
1/8" = 1'-0"

NORTH

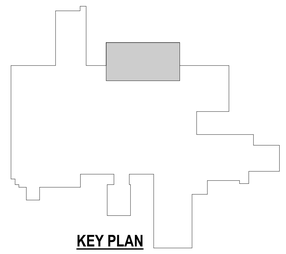

KEY PLAN

ACI BOLAND ARCHITECTS

1710 Wyandotte
Kansas City, MO 64108
T: 816.763.9600

ACI/Boland, Inc.
Kansas City | St. Louis
Licensee's Certificate of Authority Number:

STRUCTURAL, MECHANICAL, ELECTRICAL, & PLUMBING CONSULTANT

PEC

Professional Engineering Consultants, P.A.
623 Massachusetts Street, Suite 200
Lawrence, KS 66044
State Certificate of Authority: #000465F
Phone Number: 785.842.6464

Lee's Summit Medical Center

Hybrid OR Addition
2100 SE Blue Parkway
Lee's Summit, MO 64063

Date	3-23-2020
Job Number	3-19058
Drawn By	DBB
Checked By	SPH

Revision

Number	Date	Description

PD1.0

© 2020 ACI/BOLAND, Inc

PLUMBING DEMOLITION FLOOR PLAN

BIM 360://190711-000 - Lee's Summit Med Cntr Hybrid OR Addn/190711-000-MASTER MECH-R19.rvt

GENERAL NOTES

1. ALL ELECTRICAL WORK SHALL COMPLY WITH THE LATEST EDITION OF THE NATIONAL ELECTRICAL CODE (NEC) & THE AMERICANS WITH DISABILITIES ACT (ADA).
2. REFER TO RELATED ARCHITECTURAL, MECHANICAL, STRUCTURAL, AND CIVIL DRAWINGS FOR RELATED INFORMATION.
3. REFER TO THE SPECIFICATIONS FOR DATA NOT ON THE DRAWINGS.
4. E.C. SHALL REFER TO MECHANICAL DRAWINGS AND SPECIFICATIONS FOR THE REQUIREMENTS ASSOCIATED WITH WIRING AND CONNECTION OF INTERLOCKING AND CONTROLS OF MECHANICAL UNITS AND THERMOSTAT LOCATIONS.
5. COORDINATE OUTLET BOX LOCATIONS WITH MASONRY TO MINIMIZE CUTTING OF BRICK OR BLOCK.
6. ALL MOUNTING HEIGHTS TO CENTERLINE OF ITEM UNLESS OTHERWISE NOTED. VERIFY ALL OUTLET LOCATIONS ON THE JOB PRIOR TO ROUGH-IN.
7. CONDUIT RUN W/CONDUCTORS AS INDICATED & GROUND WIRE SIZED PER N.E.C. 250.122. CONDUIT SIZE AS REQUIRED.
8. WHEN INCREASED CONDUCTOR SIZES ARE SHOWN ON THE PLANS, THE LARGER CONDUCTOR SIZE SHALL BE USED THROUGHOUT THE LENGTH OF THE CIRCUIT, INCLUDING NEUTRAL AND GROUND.
9. "CT" INDICATED ADJACENT TO DEVICE INDICATES DEVICE MOUNTED ABOVE BACKSPLASH OF COUNTER TOP. VERIFY EXACT HEIGHT WITH ARCHITECTURAL PLANS AND ELEVATIONS.
10. BRANCH CIRCUITS ARE INDICATED AS ONE CIRCUIT HOME RUNS WITH INDIVIDUAL NEUTRALS. A MAXIMUM OF THREE CIRCUITS (MAXIMUM OF THREE PHASE CONDUCTORS) MAY BE GROUPED IN A SINGLE CONDUIT. WHERE MULTIPLE CIRCUITS ARE LOCATED IN THE SAME RACEWAY, JUNCTION BOX OR ENCLOSURE, NEUTRALS SHALL BE MARKED OR LABELED TO INDICATE WHICH CIRCUIT THEY ARE ASSOCIATED WITH. SEE SPECIFICATION SECTION "LOW VOLTAGE ELECTRICAL POWER CONDUCTORS AND CABLES" FOR ADDITIONAL INFORMATION.
11. JUNCTION BOX OR RECEPTACLE FOR DRINKING FOUNTAINS SHALL BE LOCATED BEHIND THE EQUIPMENT SKIRT UNLESS OTHERWISE NOTED. COORDINATE CONNECTION TYPE AND LOCATION WITH EQUIPMENT PROVIDED.
12. LABEL THE FRONT OF EACH RECEPTACLE COVERPLATE WITH PANEL DESIGNATION AND CIRCUIT NUMBER USING CLEAR THERMAL TRANSFER (ELECTRONIC DYMO) LABELS WITH 1/8" HIGH BLACK LETTERS (OR CONTRASTING COLOR IF COVERPLATES ARE BLACK OR BROWN). LABELS SHALL BE SUITABLE FOR INDOOR/OUTDOOR USE. LABEL THE BACK OF EACH LIGHT SWITCH COVERPLATE WITH PANEL DESIGNATION AND CIRCUIT NUMBER USING A FINE BLACK PERMANENT MARKER.
13. PROVIDE 18" LONG (MIN.) CONDUIT SLEEVES THRU ALL WALLS WHERE CABLES ARE INDICATED OR REQUIRED TO PASS THRU WALLS. PROVIDE BUSHINGS ON BOTH ENDS. SIZE CONDUIT FOR CABLES INSTALLED. AT CABLE TRAYS, PROVIDE ONE 4" CONDUIT SLEEVE FOR EACH 4" WIDTH OF CABLE TRAY. MAXIMUMS SHALL BE:
    1"C. = 10 CABLES
    2 1/2"C. = 20 CABLES
    3"C. = 30 CABLES
    4"C. = 50 CABLES
14. LOCATE CABLE TRAYS 6" ABOVE CEILING. OFFSET TRAY UP AND OVER LIGHT FIXTURES AND DUCTWORK (FIELD VERIFY AND PROVIDE AS REQUIRED). IF PHYSICALLY IMPOSSIBLE TO RUN CABLE TRAY UP AND OVER, THEN PROVIDE CABLE SUPPORT HOOKS FROM STRUCTURE ABOVE, SIZED AND RATED FOR INSTALLED CABLES PLUS 25% SPARE.
15. PROVIDE DIMMER PER THE SPECIFICATIONS. COORDINATE DIMMER TYPE AND WIRING WITH ASSOCIATED LIGHT FIXTURE DIMMING REQUIREMENTS (I.E. 3-WIRE, 0-10V, ELECTRONIC OR MAGNETIC LOW VOLTAGE, ETC.) OR WITH LIGHTING CONTROL SYSTEM PROPRIETARY REQUIREMENTS (I.E. LUTRON, nLIGHT, DALI, ETC.) AS NECESSARY. 3-WIRE DIMMERS SHALL BE PROVIDED WITH A DEDICATED NEUTRAL FOR EACH CONTROL ZONE. 0-10V DIMMERS SHALL BE PROVIDED WITH DIM/ON/OFF CONTROL. COORDINATE PHASE CONTROL OF LED DRIVERS (I.E. REVERSE PHASE, FORWARD PHASE, ETC.) WITH LIGHT FIXTURE MANUFACTURER'S RECOMMENDATIONS. LOW VOLTAGE CONTROL WIRING IS NOT SHOWN ON PLANS FOR CLARITY, BUT SHALL BE PROVIDED AS REQUIRED.
16. 'TV' INDICATED ADJACENT TO DEVICES INDICATES DEVICE MOUNTED ON WALL, LOCATED BEHIND FLAT PANEL TV. VERIFY EXACT LOCATION AND HEIGHT WITH ARCHITECTURAL PLANS AND ELEVATIONS.

COMMUNICATION / DATA

T1. EACH DATA, TELEPHONE, VIDEO, OR OTHER SYSTEMS OUTLET REQUIRES 1"C. WITH PULL ROPE STUBBED 6" ABOVE NEAREST ACCESSIBLE CEILING UNLESS OTHERWISE NOTED ON PLANS. CONDUITS STUBBED UP ABOVE CEILINGS SHALL BE TURNED OUT 90 DEGREES. PROVIDE INSULATED BUSHINGS ON ALL CONDUITS. LABEL CONDUIT TO IDENTIFY ITS INTENDED USE (I.E. TELEPHONE, DATA, ETC.).

T2. RUN CABLES CONTINUOUS FROM JACK TO ASSOCIATED SYSTEM PATCH PANEL IN CONDUIT, CABLE TRAY, OR J-HOOKS PER THE PLANS AND SPECIFICATIONS. NUMBER BESIDE CABLE SYMBOL INDICATES QUANTITY OF CABLES REQUIRED PER HOME RUN.

T3. PROVIDE QUANTITY AND TYPE OF JACKS PER THE DRAWINGS, SPECIFICATIONS AND DETAILS. PROVIDE JACK AND CABLE LABELING PER THE SPECIFICATIONS.

FIRE ALARM

F1. THE FIRE ALARM SYSTEM SHOWN HAS BEEN DESIGNED PER THE REQUIREMENTS OF NFPA 72, 2013 EDITION. DEVICES SHOWN INDICATE DESIGN INTENT AND SHALL BE THE MINIMUM PROVIDED. SYSTEM SUPPLIER SHALL PROVIDE ANY ADDITIONAL CODE REQUIRED DEVICES OR DEVICES REQUIRED BY THE AUTHORITY HAVING JURISDICTION.

F2. FIELD VERIFY LOCATIONS OF AREA SMOKE DETECTORS AND HEAT DETECTORS. DO NOT LOCATE WITHIN 36" OF A HVAC DIFFUSER (SUPPLY OR RETURN), IN A DIRECT AIR FLOW, WITHIN 36" OF A SPRINKLER HEAD, OR WITHIN 36" OF THE TIP OF A CEILING FAN BLADE. SMOKE DETECTORS FOR DOOR RELEASE SHALL BE LOCATED ON THE CENTER LINE OF THE DOOR AND A MAXIMUM OF 5 FEET FROM THE DOOR. THE MINIMUM DISTANCE FROM THE DOOR IS THE DEPTH OF THE WALL SECTION ABOVE THE DOOR, BUT NOT LESS THAN 12".

F3. FAN SHUTDOWN RELAY WIRING SHALL BE LOCATED WITHIN 3 FEET OF THE FAN CONTROLS AND THE WIRING TO THE RELAY SHALL BE MONITORED.

F4. LABEL REMOTE ALARM INDICATOR FOR DUCT MOUNTED SMOKE DETECTORS (I.E. RTU-=1 SUPPLY, RTU-2 RETURN, FIRE/SMOKE DAMPER, ETC.). DUCT DETECTORS SHOULD BE LOCATED IN THE AREA BETWEEN 6 AND 10 DUCT EQUIVALENT DIAMETERS OF STRAIGHT, UNITERRUPTED DUCTWORK. DUCT DETECTORS FOR FIRE/SMOKE DAMPERS SHOULD BE LOCATED BETWEEN THE LAST INLET OR OUTLET UPSTREAM OF THE DAMPER AND THE FIRST INLET OR OUTLET DOWNSTREAM OF THE DAMPER.

F5. PROVIDE 120V POWER AND FUSTAT FOR EACH FIRE/SMOKE DAMPER. INTERLOCK WITH FIRE ALARM CONTROL PANEL TO CLOSE THE FIRE/SMOKE DAMPER UPON ANY ALARM AT THE FIRE ALARM CONTROL PANEL AND TO SHUTDOWN THE ASSOCIATED MECHANICAL UNIT.

HEALTHCARE

H1. DO NOT ROUTE BRANCH CIRCUITS OR FEEDERS ABOVE OR BELOW IMAGING ROOMS BECAUSE OF POSSIBLE ELECTROMAGNETIC INTERFERENCE.

H2. BOND PANELBOARDS SERVING THE SAME PATIENT CARE VICINITY WITH #6 AWG MINIMUM COPPER CONDUCTOR PER NEC ARTICLE 517. THIS INCLUDES NORMAL AND ESSENTIAL PANELBOARDS AND ESSENTIAL PANELBOARDS FED FROM DIFFERENT TRANSFER SWITCHES.

H3. THE GROUNDING SYSTEM IN PATIENT CARE AREAS SHALL BE TESTED BY VOLTAGE AND IMPEDANCE MEASUREMENTS PER NFPA 99 REQUIREMENTS.

H4. MEDICAL GAS ALARM CABLING SHALL BE PROVIDED AND INSTALLED BY THE ELECTRICAL CONTRACTOR. VERIFY ALL REQUIREMENTS WITH THE MEDICAL GAS SUPPLIER. ALL MEDICAL GAS CABLING SHALL BE IN CONDUIT.

H5. COORDINATE ALL BOX ROUGH-IN AND PATHWAY REQUIREMENTS FOR SOUND SYSTEMS IN OPERATING ROOMS WITH THE EQUIPMENT SUPPLIER

H6. REFER TO THE SPECIFICATIONS FOR REQUIREMENTS ON COLOR CODING BOXES AND/OR CONDUIT ACCORDING TO THE SPECIFIC BRANCH OF THE ESSENTIAL ELECTRICAL SYSTEM.

H7. REFER TO THE SPECIFICATIONS FOR REQUIREMENTS ON COLOR CODING OF NAMEPLATES ACCORDING TO THE SPECIFIC BRANCH OF THE ESSENTIAL ELECTRICAL SYSTEM.

H8. THIS IS A LIFE SAFETY BUILDING WHICH MEANS IT SHALL REMAIN REASONABLY OPERATIONAL IN THE CASE OF A SEISMIC EVENT. REFER TO THE SPECIFICATIONS FOR SPECIFIC REQUIREMENTS ON EQUIPMENT BRACING.

H9. FOR ISOLATION PANEL CIRCUITS, USE 1" MINIMUM EMT CONDUIT ROUTED AS DIRECT AS POSSIBLE. MAXIMUM OF 2 CIRCUITS PER CONDUIT. REFERENCE SPECIFICATION SECTION 260527 FOR ADDITIONAL REQUIREMENTS.

H10. ALL PATIENT CARE AREAS (PATIENT ROOMS AND SUPPORT SPACES) SHALL HAVE TWO GROUND PATHS PER N.E.C. ARTICLE 517.

H11. REFER TO MANUFACTURER DRAWINGS FOR ALL IMAGING EQUIPMENT REQUIREMENTS, INCLUDING BUT NOT NOT LIMITED TO CIRCUIT BREAKER SIZE, CABLE TRAY, DUCTS, CONDUITS, CABLES, CONDUCTORS, EPO SWITCHES, AND ALL DEVICES REQUIRED FOR A COMPLETE INSTALLATION.

H12. THE LIFE SAFETY BRANCH AND THE CRITICAL BRANCH OF THE ESSENTIAL ELECTRICAL SYSTEM SHALL BE KEPT ENTIRELY INDEPENDENT OF ALL OTHER WIRING AND EQUIPMENT AND SHALL NOT ENTER THE SAME RACEWAY, BOXES, OR CABINETS WITH EACH OTHER OR OTHER WIRING PER N.E.C. ARTICLE 517.

H13. DIGITAL CLOCK WITH INTEGRAL TIMER SHALL BE SIMPLEX #6303-9103 CLOCK WITH #6303-9202 CONTROL STATION OR APPROVED EQUAL. PROVIDE 120V. POWER TO CLOCK AND CONTROL WIRING FROM CLOCK TO CONTROL STATION AS REQUIRED.

H14. DIGITAL CLOCK SHALL BE SIMPLEX #6334-9125 WITH # 6334-9802 MOUNTING BRACKET AND #6334-9803 HARNESS ASSEMBLY OR APPROVED EQUAL. CLOCK SHALL BE 120V. WITH 2-1/2" LED (4) DIGIT DISPLAY.

H15. HOSPITAL GRADE RECEPTACLES SHALL ONLY BE PROVIDED IN OPERATING ROOMS AND IN CATEGORY 1 AND CATEGORY 2 PATIENT CARE AREAS AS DEFINED BY NEC ARTICLE 517 AND NFPA 99.

SYMBOL LIST

SYMBOL	DESCRIPTION	MOUNTING	SYMBOL	DESCRIPTION	MOUNTING
COMMUNICATION / DATA					
	1-DATA OUTLET & JACK (GEN NOTES T1 & T3)	18"AFF		2-DATA OUTLETS & JACKS (GEN NOTES T1 & T3)	18"AFF
	1-VOICE OUTLET & JACK (GEN NOTES T1 & T3)	18"AFF		3-DATA OUTLETS & JACKS (GEN NOTES T1 & T3)	18"AFF
	1-VOICE/1-DATA OUTLET & JACKS (GEN NOTES T1 & T3)	18"AFF		4-DATA OUTLETS & JACKS (GEN NOTES T1 & T3)	18"AFF
	1-VOICE/2-DATA OUTLETS & JACKS (GEN NOTES T1 & T3)	18"AFF		2-VOICE/2-DATA OUTLETS & JACKS (GEN NOTES T1 & T3)	18"AFF
	CABLE TV OR VIDEO OUTLET & CONNECTOR (GEN NOTES T1 & T3)	18"AFF		1-VOICE/3-DATA OUTLETS & JACKS (GEN NOTES T1 & T3)	18"AFF
	VOICE UTP CABLE HOME RUN	GEN NOTE T2	### XX	### = TERMINATION ROOM XX = CABLE CONFIGURATION	SEE HOR. CABLE SCHEDULE
	DATA UTP CABLE HOME RUN	GEN NOTE T2			
	VIDEO COAX CABLE HOME RUN	GEN NOTE T2			
	FIBER OPTIC CABLE HOME RUN (MULTI MODE)	GEN NOTE T2		FIBER OPTIC CABLE HOME RUN (SINGLE MODE)	GEN NOTE T2
FIRE ALARM					
'FACP'	FIRE ALARM CONTROL PANEL	WALL	'FAAP'	FIRE ALARM REMOTE ANNUNCIATOR	WALL
	FIRE ALARM MANUAL STATION	46"AFF		FIRE ALARM SPEAKER	WALL
	FIRE ALARM HORN	BOTTOM 80"		COMB FA SPEAKER & VISUAL SIGNAL	BOTTOM 80"
	FIRE ALARM VISUAL SIGNAL	BOTTOM 80"		COMB FA HORN & VISUAL SIGNAL	CEILING
	COMB. F.A. HORN & VISUAL SIGNAL	BOTTOM 80"		FIRE ALARM VISUAL SIGNAL	CEILING
	CHIME	WALL		FIRE ALARM CONTROL MODULE	
	FIRE SPRINKLER ALARM BELL	WALL		FIRE ALARM MONITOR MODULE	
	F.A. RELAY (GEN NOTE F3)			FIRE SPRINKLER PRESSURE SWITCH	
	IONIZATION AREA SMOKE DETECTOR (GEN NOTE F2)			FIRE ALARM SPEAKER	CEILING
				FIRE ALARM SPEAKER	WALL
	PHOTO ELECTRIC AREA SMOKE DETECTOR (GEN NOTE F2)			HEAT DETECTOR (GEN NOTE F2)	
				FIRE SPRINKLER TAMPER SWITCH	SPRKLR RSR
	DUCT SMOKE DETECTOR (GEN NOTE F4)	DUCTWORK		FIRE SPRINKLER WATER FLOW SW	SPRKLR RSR
				ELECTROMAGNETIC DOOR HOLDER	WALL
FSD	DUCT SMOKE DETECTOR & FIRE/ SMOKE DAMPER (GEN NOTES F4 & F5)	DUCTWORK			
ONE-LINE					
LSIG, GFI, ST, K	CIRCUIT BREAKER ACCESSORIES: LSIG = LONG TIME, SHORT TIME, INSTANTANEOUS, GROUND FAULT; GFI = GROUND FAULT; ST = SHUNT TRIP; K = KIRK KEY INTERLOCK		# A A 2P	FUSIBLE SWITCH (CIRCUIT NUMBER / SWITCH SIZE / FUSE SIZE / # OF POLES) (# OF POLES IF OTHER THAN 3)	
G	INDICATOR LIGHT(G = GREEN, R = RED)		# A A 2P	STARTER WITH FUSIBLE SWITCH (CIRCUIT NUMBER / SWITCH SIZE / FUSE SIZE / # OF POLES / STARTER SIZE) (# OF POLES IF OTHER THAN 3)	
	CONTACTS (NORMALLY OPEN,CLOSED)				
	FUSE				
	CIRCUIT BREAKER		# A AF AT 2P # 2P	CIRCUIT BREAKER (MOLDED CASE NON-ADJUSTABLE TRIP / ADJUSTABLE TRIP) (CIRCUIT NUMBER / TRIP SIZE / # OF POLES) (FRAME SIZE / TRIP SIZE) (# OF POLES IF OTHER THAN 3)	
	OVERLOADS				
	DRAWOUT CONTACTS				
	DISCONNECT SWITCH (SEE EQUIP CONN SCHED) (VOLTAGE / SWITCH SIZE / FUSE SIZE / # OF POLES - NOTED IF EQUIPMENT NOT SCHEDULED)			3Ø TRANSFORMER (DELTA PRIMARY / WYE SECONDARY)	
	STARTER (SEE EQUIP CONN SCHED) (VOLTAGE / STARTER SIZE / # OF POLES - NOTED IF EQUIPMENT NOT SCHEDULED)			1Ø TRANSFORMER	
	GROUND CONNECTION		PANEL SPD	PANELBOARD (BUILT-IN SPD)	
	LIGHTNING ARRESTOR				
1	FEEDER DESIGNATION				
SPD	SURGE PROTECTIVE DEVICE		N E ATS	TRANSFER SWITCH (ATS = AUTOMATIC, MTS = MANUAL) (AMP SIZE / VOLTAGE / POLES / AIC RATING / NEMA RATING) (NEMA RATING IF OTHER THAN NEMA-1)	
M	METER (UTILITY / PANEL MOUNTED)				
HP KW	EQUIPMENT (SINGLE MOTOR / MULTI-MOTOR OR OTHER TYPE AS NOTED)		'1' RV AT	MOTOR STARTER (SINGLE SPEED ACROSS-THE-LINE (UON)) (NEMA SIZE / RV AT= REDUCED VOLTAGE / AUTO-TRANSFORMER / SS = SOLID STATE)	
VFD	VARIABLE FREQUENCY DRIVE (HP SIZE IF NOT SCHEDULED)				

PEN WEIGHT LEGEND

ALL DEVICES, LIGHT FIXTURES, ETC., DRAWN IN DARK SOLID LINES ARE NEW TO BE INSTALLED		ALL DEVICES, LIGHT FIXTURES, ETC., DRAWN IN DARK DASHED LINES ARE EXISTING TO BE REMOVED	
	NEW DUPLEX GROUNDED RECEPTACLE		DUPLEX GROUNDED REC TO BE REMOVED
	NEW LIGHT FIXTURE		LIGHT FIXTURE TO BE REMOVED
ALL DEVICES, LIGHT FIXTURES, ETC., DRAWN IN LIGHT SOLID LINES ARE EXISTING TO REMAIN		ALL DEVICES, LIGHT FIXTURES, ETC., DRAWN IN LIGHT DASHED LINES ARE EXISTING TO BE RELOCATED	
	EXISTING DUPLEX GROUNDED REC TO REMAIN		DUPLEX GROUNDED REC TO BE RELOCATED
	EXISTING LIGHT FIXTURE TO REMAIN		LIGHT FIXTURE TO BE RELOCATED

- - - SYMBOL LIST IS FOR REFERENCE ONLY. ALL SYMBOLS MAY NOT BE USED ON THIS PROJECT. - - -

GENERAL NOTES

NURSE CALL

N1. THE CONTRACTOR SHALL PROVIDE OUTLET BOXES AND 1"C. TO ABOVE NEAREST ACCESSIBLE CEILING FOR ALL NURSE CALL DEVICE LOCATIONS. ALL NURSE CALL DEVICE LOCATIONS SHALL BE COORDINATED WITH THE FINAL DRAWINGS FROM THE NURSE CALL SYSTEM SUPPLIER. COORDINATE ALL REQUIREMENTS WITH THE NURSE CALL SYSTEM SUPPLIER. MOUNTING HEIGHT FOR EMERGENCY BATH STATIONS SHALL BE PER AIA GUIDELINES.

SYMBOL LIST

SYMBOL	DESCRIPTION	MOUNTING	SYMBOL	DESCRIPTION	MOUNTING
ABBREVIATIONS					
NL	NIGHT LIGHT - WIRE AHEAD OF CONTROLS		AFF	ABOVE FINISHED FLOOR	
			AFG	ABOVE FINISHED GRADE	
EM	ON EMERGENCY POWER		DF	DRINKING FOUNTAIN - SEE GENERAL NOTE 11	
WP	WEATHERPROOF				
CT	COUNTERTOP (SEE GEN. NOTE 9)		TV	SEE GENERAL NOTE 16	
UON	UNLESS OTHERWISE NOTED				
W	WALL				
CONDUIT AND WIRING					
	EMERGENCY CIRCUIT	CLG/WALL		CONDUIT HOME RUN, 1 CIRCUIT. 2#12 & 1#12 GRD. - 1/2"C.	CLG/WALL
	MASTER/SLAVE FIXTURE WHIP	CEILING		CONDUIT HOME RUN, 2 CIRCUITS. 4#12 & 1#12 GRD. - 1/2"C.	CLG/WALL
	LOW VOLTAGE WIRING	CLG/WALL		CONDUIT HOME RUN, 3 CIRCUITS. 6#12 & 1#12 GRD. - 1/2"C.	CLG/WALL
	CDT RUN 2#12 & 1#12 GRD.- 1/2"C. OR CDT RUN AS NOTED ON PLAN	CLG/WALL		CONDUIT HOME RUN, 2 CIRCUITS PHASE CONDUCTORS/ NEUTRAL CONDUCTOR (#12 UON) SWITCH LEGS (#12 UON) GROUND CONDUCTOR (#12 UON)	CLG/WALL
	CDT RUN 2#12 & 1#12 GRD.- 3/4"C. OR CDT RUN AS NOTED ON PLAN	EARTH/ FLOOR			
#10	CONDUIT HOME RUN, 1 CIRCUIT. 2#10 & 1#10 GRD.	CLG/WALL			
	CONDUIT RUN PARTIAL CIRCUIT. 2#12 & 1#12 GRD. - 1/2"C.	CLG/WALL			
	MISC. EQUIPMENT CONNECTION				
	CONDUIT SEAL OFF				
LIGHTING, SWITCHES AND SENSORS					
	LIGHT FIXTURE & FIXTURE LETTER	CEILING	$ S2 S3 S4	SWITCHES (1-POLE, 2-POLE, 3-WAY, 4-WAY)	46" AFF
	STRIP LIGHT FIXTURE & FIXT LETTER	CEILING			
A A	LIGHT FIXTURE & FIXTURE LETTER	CEILING	SK SP ST	SWITCHES (KEYED, PILOT, TIMER)	46" AFF
	LIGHT FIXTURE & FIXTURE LETTER	WALL	a, b, c	INDICATES SWITCHING SCHEME	
A	EXIT SIGN (SHADING DENOTES EXIT FACE SIDE)	CEIL/WALL	S	LOW VOLTAGE SWITCH	46" AFF
			S1	ON/OFF SWITCH	46" AFF
	LIGHT FIXTURE & FIXTURE LETTER	WALL	S2	ON/OFF/0-10V DIMMING SWITCH	46" AFF
	FIXTURE WITH SHADED LAMP(S) ON EMERGENCY POWER	CEILING	S3	DUAL TECH ON/OFF SENSOR	46" AFF
			S4	16-SCENE WALL CONTROLLER	46" AFF
	EMERGENCY BATTERY LIGHT FIXT	CEIL/WALL	S5	DUAL TECH ON/OFF/0-10V DIM SW	46" AFF
A A	COMB EXIT SIGN/EM BATTERY LIGHT	WALL		PIR SENSOR	CLG/WALL
A A	LIGHT FIXTURE & FIXTURE LETTER	POLE		DUAL TECHNOLOGY SENSOR	CLG/WALL
M	1 RELAY PIR SENSOR	46" AFF	SP	SWITCHING POWER PACK	
2M	2 RELAY PIR SENSOR	46" AFF	SE	UL924 SWITCHING POWER PACK	
1D	1 RELAY DUAL TECH SENSOR	46" AFF	DP	DIMMING POWER PACK	
2D	2 RELAY DUAL TECH SENSOR	46" AFF	DE	UL924 DIMMING POWER PACK	
D	DIMMER (SEE GENERAL NOTE 15)	46" AFF	AV	AV SYSTEM/LIGHTING INTERFACE	
PC	PHOTOCELL				
POWER					
	SINGLE GROUNDED RECEPTACLE	18" AFF	A	BRANCH CIRCUIT PANEL AND PANEL DESIGNATION	72" TO TOP
	DUPLEX GROUNDED RECEPTACLE	18" AFF		ELECTRICAL DISTRIBUTION EQUIP	
	DUPLEX GROUNDED RECEPTACLE	CEILING	X-X X-X	EQUIPMENT - SEE EQUIPMENT CONNECTION SCHEDULE	
	DOUBLE DUPLEX GROUNDED REC	18" AFF			
	GROUND FAULT DUPLEX REC	18" AFF		CONDUIT SLEEVE (GEN NOTE 13)	
	GRD FAULT DOUBLE DUPLEX REC	18" AFF		CABLE TRAY (GEN NOTE 14)	
	DUPLEX GRD REC BOTTOM SWITCHD	18" AFF	M	MOTOR	
	TAMPER-PROOF DUPLEX REC	18" AFF		DISCONNECT SWITCH	
	TAMPER-PROOF GFCI DUPLEX REC	18" AFF	BM	MANUAL STARTER	
				CIRCUIT BREAKER	
A A	SPECIAL OUTLET (SEE SCHEDULE OR AS NOTED)	FLOOR/WALL		STARTER ON ATS (AS NOTED)	
	SPECIAL DEVICE (AS NOTED)			COMBINATION STARTER/DISC	
2	FEEDER DESIGNATION		R	RELAY	
	JUNCTION BOX - 1-GANG			PUSHBUTTON (1-BUTTON, 2-BUTTON)	46" AFF
	JUNCTION BOX - 2-GANG		T	BOX MOUNTED TRANSFORMER	
F	FUSTAT BUSS #SSY		C	CONTACTOR	
TS	THERMOSTAT/TEMP SENSOR	46" AFF		METER	
P	PLUG LOAD SENSOR	CEILING		PLUGMOLD SURFACE RACEWAY	WALL
H	HANDICAP DOOR PUSHBUTTON	36" AFF		BUSDUCT PLUG	
NURSE CALL					
	NC STAFF ASSIST STATION WITHOUT AUDIO	46" AFF	'NCCP'	NC CONTROL PANEL	WALL
				NC ZONE LIGHT	CEILING
S	NC STAFF STATION W/ AUDIO	46" AFF		NC VISUAL SIGNAL	CLG/WALL
P	NC PATIENT STATION (GEN NOTE N3)	46" AFF	B	NC BED INTERFACE UNIT	46" AFF
N	NC DUTY STATION	46" AFF	B	NC CODE BLUE STATION	46" AFF
E	NC EMERGENCY BATH STATION		NC	NC MASTER STATION	DESKTOP
X	NC PRESENCE STATION	46" AFF			
A	NC AUXILIARY JACK	46" AFF			
SECURITY					
	DURESS			DOOR POSITION SWITCH	
	DOOR RELEASE BUTTON			DOOR LOCK & POSITION SWITCH	
	CCTV CAMERA - PAN/TILT/ZOOM	CEILING	E	ELECTRIC DOOR STRIKE	
W	CCTV CAMERA - PAN/TILT/ZOOM	WALL	M	MAGNETIC LOCK	
	CCTV CAMERA - FIXED	CEILING		GLASS BREAK SENSOR	
W	CCTV CAMERA - FIXED	WALL		SECURITY BEAM DETECTOR	
	CARD READER			SEC ROOM MOTION DETECTOR	WALL/CLG
K	KEY PAD			SEC ROOM MOTION DETECTOR	CEILING
	REQUEST TO EXIT DEVICE			SEC CORRIDOR MOTION DETECTOR	

- - - SYMBOL LIST IS FOR REFERENCE ONLY. ALL SYMBOLS MAY NOT BE USED ON THIS PROJECT. - - -

STATE OF MISSOURI
DARIN DOUGLAS CROWDER
NUMBER PE-2004017162
PROFESSIONAL ENGINEER

ACI BOLAND ARCHITECTS
1710 Wyandotte
Kansas City, MO 64108
T: 816.763.9600

ACI/Boland, Inc.
Kansas City | St. Louis
Licensee's Certificate of Authority Number:

STRUCTURAL, MECHANICAL, ELECTRICAL, & PLUMBING CONSULTANT

PEC
Professional Engineering Consultants, P.A.
623 Massachusetts Street, Suite 200
Lawrence, KS 66044
State Certificate of Authority: #000465F
Phone Number: 785.842.6464

LEES SUMMIT MEDICAL CENTER

HYBRID OR ADDITION
2100 SE Blue Pkwy, Lee's Summit, MO
64063

Date	3/23/20
Job Number	3-19058
Drawn By	MJU
Checked By	RWL

Revision

Number	Date	Description

E0.1

© 2020 ACI/BOLAND, Inc

ELECTRICAL LEAD SHEET

3/23/2020 10:39:19 AM
BIM 360://190711-000 - Lee's Summit Med Cntr Hybrid OR Addn/190711-000-MASTER ELEC-R19.rvt

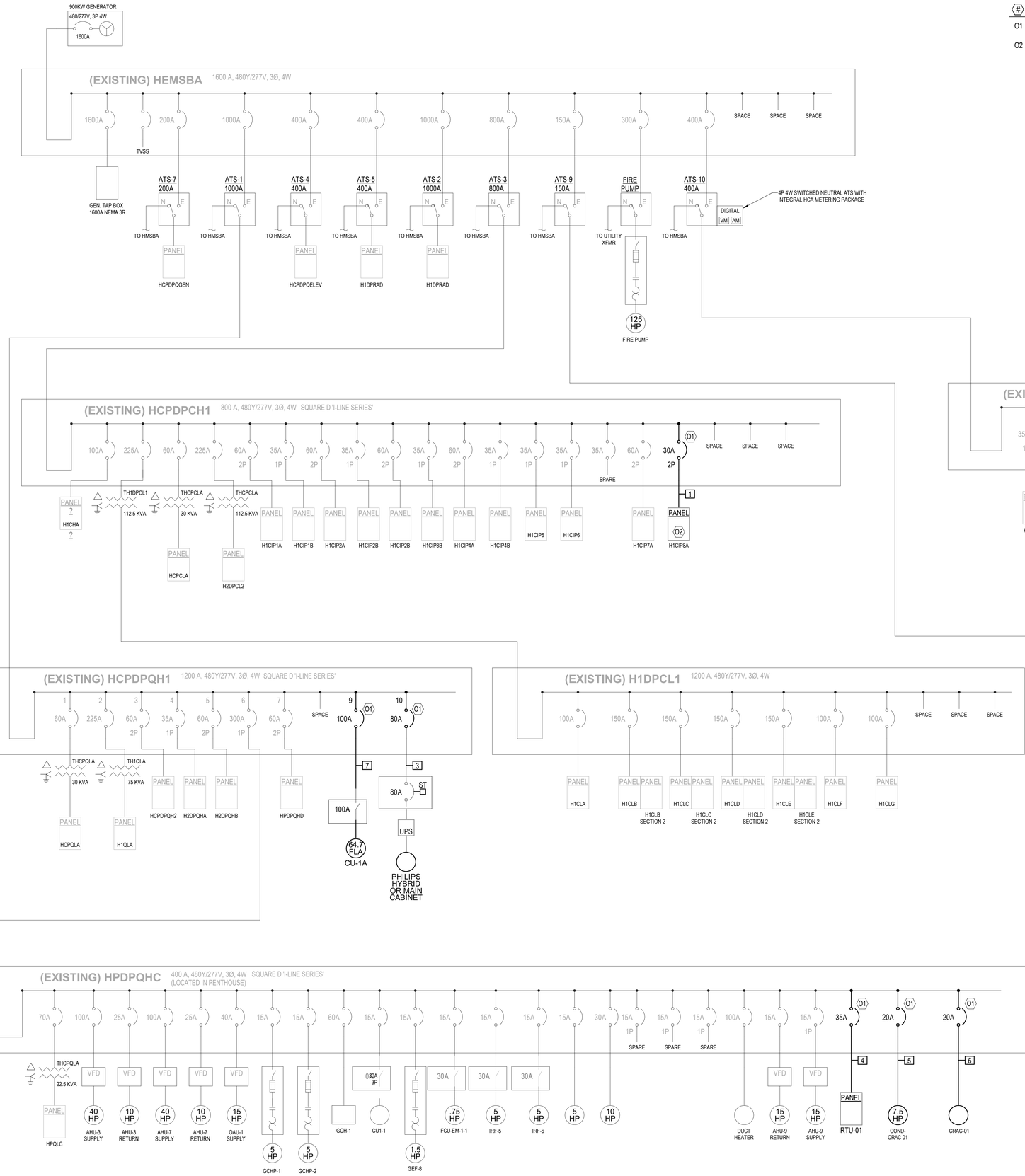

1 **EMERGENCY ONE-LINE DIAGRAM**

N0 SCALE

KEYED NOTES:

O1 MATCH EXISTING BREAKER TYPE AND AIC RATING AS REQUIRED. PROVIDE ENGRAVED LABEL AT BREAKER LOCATION.

O2 PROVIDE ISOLATION PANELBOARD WITH 480: 120V., 30A MAIN CIRCUIT BREAKER, 10KVA SECONDARY TRANSFORMER, 100A SECONDARY CIRCUIT BREAKER, TWELVE (12) 20A:2P, 120V. CIRCUIT BREAKERS.

GENERAL ONE-LINE DIAGRAM NOTES:

1. UNLESS OTHERWISE NOTED, ALL CIRCUIT BREAKERS AND/OR SWITCHES ARE THREE POLE.
2. ALL ELECTRICAL EQUIPMENT AND WIRING SHOWN IN A LIGHT LINE, IS EXISTING TO REMAIN.
3. ALL ELECTRICAL EQUIPMENT AND WIRING SHOWN IN A DARK LINE, IS NEW WORK UNDER THIS CONTRACT.
4. ALL ELECTRICAL EQUIPMENT AND WIRING SHOWN IN A DARK DASHED LINE, IS TO BE REMOVED UNDER THIS CONTRACT.

FEEDER SCHEDULE

DESIG.	EQUIPMENT SERVED	CONDUCTORS SETS	CONDUCTORS NO.	CONDUCTORS SIZE	GROUND SIZE PER SET	ISOLATED GROUND SIZE	CONDUIT SIZE PER SET	SPARE CONDUIT
1	ISOLATION PANEL:H1CIP8A	1	2	#10 AWG CU	#10	--	1/2"C.	--
2	ISOLATION PANEL:H1CIP8B	1	2	#10 AWG CU	#10	--	1/2"C.	--
3	HYBRID OR CABINET	1	3	#3 AWG CU	#8	--	1-1/4"C.	--
4	RTU-01 PANEL	1	3	#8 AWG CU	#10	--	3/4"C.	--
5	COND-CRAC 01	1	3	#12 AWG CU	#12	--	1/2"C.	--
6	CRAC 01	1	3	#12 AWG CU	#12	--	1/2"C.	--
7	CU-1A	1	3	#1 AWG CU	#8	--	1-1/2"C.	--

STATE OF MISSOURI
DARIN DOUGLAS GRONDER
NUMBER PE-2004017162
PROFESSIONAL ENGINEER

ACI BOLAND ARCHITECTS
1710 Wyandotte
Kansas City, MO 64108
T: 816.763.9600

ACI/Boland, Inc.
Kansas City | St. Louis
Licensee's Certificate of Authority Number:

STRUCTURAL, MECHANICAL, ELECTRICAL, & PLUMBING CONSULTANT

PEC
Professional Engineering Consultants, P.A.
623 Massachusetts Street, Suite 200
Lawrence, KS 66044
State Certificate of Authority: #000465F
Phone Number: 785.842.6464

LEES SUMMIT MEDICAL CENTER

HYBRID OR ADDITION
2100 SE Blue Pkwy, Lee's Summit, MO
64063

Date	3/23/20
Job Number	3-19058
Drawn By	MJU
Checked By	RWL

Revision

Number	Date	Description

E0.2

© 2020 ACI/BOLAND, Inc

ELECTRICAL ONE-LINE DIAGRAM

3/23/2020 10:39:23 AM

①②③ EQUIPMENT CONNECTION SCHEDULE

MECHANICAL EQUIPMENT CONNECTIONS

UNIT DESIG	UNIT VOLTAGE	LOAD H.P.	LOAD FLA	LOAD KVA	PANEL DEVICE CIRCUIT NUMBER	PANEL DEVICE BKR AMPS	PANEL DEVICE SW. AMPS	PANEL DEVICE FUSE AMPS	PANEL DEVICE NEMA C-START SIZE	DEVICE AT UNIT BKR AMPS	DEVICE AT UNIT SW. AMPS	DEVICE AT UNIT FUSE AMPS	DEVICE AT UNIT NEMA C-START SIZE	DEVICE AT UNIT OTHER	SWITCHES	FEEDER DESCRIPTION OR SEE THE FEEDER SCHEDULE	REMARKS OR SEE THE INDICATED NOTES BELOW
CRAC	COMPUTER ROOM AIR CONDITIONING UNIT																
⑤ 01	480/3	13.2A	13.2	10.97		20			3	"1"		30	20	3		1	3 #12 AWG THWN; #12 AWG GRD; 1/2"C.
COND-CRAC 01	CRAC CONDENSING UNIT																
⑤	480/3	6.4A	6.4	5.321	HPDPQHC	15			3			30	10	3	"0"	1	3 #12 AWG THWN; #12 AWG GRD; 1/2"C.
EF 01	EXHAUST FAN 120/1	0.5	9.8	1.176	HPQLC:22	20			1					1	FUSTAT	1	2 #12 AWG THWN; #12 AWG GRD; 1/2"C.
RTU 01	ROOF TOP UNIT 480/3	28A	28.0	23.27	HPDPQHC	35			3			60	45	3	"2"	BY MC	1	3 #8 AWG THWN; #10 AWG GRD; 3/4"C.
CC-RTU 01	CONDENSING UNIT 480/3	54.7A	64.7	53.79	HCPDPQH1	100			3			100	100	3	"3"	1	3 #1 AWG THWN; #8 AWG GRD; 1-1/2"C.

① ALL CONNECTIONS AND ELECTRICAL EQUIPMENT LISTED IN SCHEDULE SHALL BE PROVIDED AND INSTALLED BY THE ELECTRICAL CONTRACTOR. FIELD VERIFY CONNECTION REQUIREMENTS AND EQUIPMENT PROVIDED BY OTHERS PRIOR TO ROUGH-IN.

② REFER TO MECHANICAL DRAWINGS AND SPECIFICATIONS FOR THE REQUIREMENTS ASSOCIATED WITH WIRING AND CONNECTIONS OF INTERLOCKING, THERMOSTAT LOCATIONS, EXHAUST FAN CONTROL SWITCHES, AND OTHER CONTROLS OF MECHANICAL EQUIPMENT.

③ SIZE FUSES FOR MOTOR FUSTATS BASED ON 125% OF MANUFACTURER'S NAMEPLATE FULL LOAD AMPERAGE UNLESS OTHERWISE NOTED ON THE DRAWINGS.

④ PROVIDE DUCT MOUNTED SMOKE DETECTORS IN THE SUPPLY AND RETURN DUCTS. VERIFY THE REQUIRED QUANTITY OF DUCT SMOKE DETECTORS FOR EACH UNIT WITH THE FINAL INSTALLED DUCTWORK LAYOUT TO MEET NFPA REQUIREMENTS. PROVIDE FAN SHUT DOWN RELAY TO SHUT DOWN MECHANICAL UNIT UPON ANY ALARM AT THE FIRE ALARM CONTROL PANEL.

⑤ REFER TO SHEET ONE-LINE DIAGRAM ON SHEET E0.2 FOR ADDITIONAL INFORMATION.

①②③ LIGHTING FIXTURE SCHEDULE

MARK	DESCRIPTION	MANUFACTURER NAME	MANUFACTURER MODEL	LIGHT SOURCE TYPE	LIGHT SOURCE WATTS	LIGHT SOURCE VOLTS	LENS/LOUVER/FINISH	W	L	D	REF. NOTE	REMARKS
D2	2X2 LAY-IN	LITHONIA	2BLT2-33LADPGZ10LP835	LED	33	UNV	ACRYLIC/MATTE WHITE	2.0	2.0	0.3		3800LM 3500K 80CRI
D4	2X4 LAY-IN	LITHONIA	2BLT2-60LADPGZ10LP835	LED	45	UNV	ACRYLIC/MATTE WHITE	2.0	4.0	0.3		3800LM 3500K 80CRI
E	EXISTING FIXTURE			LED	49	UNV	DARK BRONZE	1.1	1.3	0.8		
HA	4" RECESSED DOWNLIGHT WITH LENS	LITHONIA	LDN4-3520-L04ARLSS-GZ10	LED	21	UNV	SEMI-CLEAR	0.4	1.4	0.0	6	2000LM 3500K 80CRI; PROVIDE WITH 0-10V DIMMING DRIVER
M4	1X4 LED LAY-IN	KURTZON	MLOR41X42/LEDH1/CIR	LED	113	UNV	ACRYLIC	1.0	4.0	0.3	6	11,500LM 5000K 80CRI; ASYMETRIC THROW TO BE AIMED TOWARDS BED; PROVIDE WITH 10W INTEGRAL EMERGENCY DRIVER
R	WALL PACK EXISTING TO BE RELOCATED	LITHONIA	MRW SERIES	LED	47	UNV		1.1	1.3	0.8		1656LM 4000K 80CRI
X1	1 FACE/AC EXIT	LITHONIA	LRP1RC	LED	5	UNV	CAST ALUMINUM	0.7	1.0	0.1	6	RED W/OUT BAT.

LIGHTING FIXTURE SCHEDULE NOTES

1. GENERAL CONTRACTOR SHALL PROVIDE FIREPROOFING AROUND RECESSED FIXTURES INSTALLED IN FIRE RATED CEILING PER U.L. REQUIREMENTS. ELECTRICAL CONTRACTOR WILL COORDINATE.
2. MANUFACTURERS LISTED IN THIS SCHEDULE OR APPROVED BY WRITTEN ADDENDUM WILL BE THE ONLY APPROVED MANUFACTURERS TO BID THE LIGHTING FIXTURES FOR THIS PROJECT. CONTRACTORS AND SUPPLIERS USING PRICING FROM MANUFACTURERS NOT LISTED ON SCHEDULE OR BY ADDENDUM DO SO AT THEIR OWN RISK.
3. LIGHT FIXTURE SELECTIONS ARE BASED ON THE MANUFACTURER IN THE LEFT MOST COLUMN AS LISTED IN THE SCHEDULE. FIXTURES APROVED AS EQUALS IN THIS SCHEDULE OR BY ADDENDUM SHALL BE EQUAL TO THE UNIT SPECIFIED IN THE LEFT MOST COLUMN, IE: SPRING LOADED LATCHES, POST PAINTED FINISH, AND PHOTOMETRICS.
4. ALL LIGHT FIXTURES SHALL BE SECURED TO THE CEILING FRAMING SYSTEM BY MECHANICAL MEANS (SUCH AS BOLTS, SCREWS, OR RIVETS) OR BY CLIPS IDENTIFIED FOR USE WITH THE TYPE OF CEILING FRAMING MEMBER AND LIGHT FIXTURE.
5. LIGHT FIXTURES SHALL BE PROVIDED WITH 0-10V DIMMING DRIVERS. DRIVERS SHALL BE CAPABLE OF DIMMING TO A MINIMUM OF 10% OF TOTAL LIGHT OUTPUT. LED DRIVERS SHALL HAVE A DISCONNECTING MEANS MEETING THE REQUIREMENTS OF NEC SECTION 410.130(G), EXCEPT FOR THOSE INSTALLED IN CORD-AND-PLUG CONNECTED FIXTURES. WHERE APPLICABLE, WHEN DIMMING SWITCHES ARE NOT PROVIDED AS PART OF THE DESIGN, CONTRACTOR SHALL CAP OFF 0-10V DIMMING WIRES FOR FUTURE EXTENSION BY OWNER.
6. PROVIDE ARROWS AND FACES AS INDICATED ON THE DRAWINGS.
7. TO COMPLY WITH NEC SECTION 410.130(G), ALL EXISTING OR RELOCATED FLUORESCENT LIGHT FIXTURES WITHOUT A BALLAST DISCONNECTING MEANS SHALL HAVE A BALLAST DISCONNECTING MEANS PROVIDED AND INSTALLED UNDER ANY OF THE FOLLOWING CONDITIONS:
   a. WHEN AN EXISTING BALLAST IS REPLACED.
   b. WHEN AN EXISTING LIGHT FIXTURE IS RELOCATED.
   c. WHEN AN EXISTING LIGHT FIXTURE IS RECIRCUITED.

ISOLATION PANEL: H1CIP8A

120 VOLTS, 1 PHASE, 2 WIRE
30 AMP MAIN BKR, FLUSH MTD.
10000 AIC LABELED

W/GRD. BUS — 10 kVA ISOLATION TRANSFORMER

CIRC NO.	LOAD V. A.	LOAD TYPE	LOAD DESCRIPTION	P.	AMP SIZE	PHASE	AMP SIZE	P.	LOAD DESCRIPTION	LOAD TYPE	LOAD V. A.	CIRC NO.
1	500	RCPT	BOOM C4 MONITOR CKT.	2	20	1	20	2	BOOM C2 RECPEPT. CKT	RCPT	200	2
-----	----	---	----------	--	|	2	|	--	----------	---	----	--
3	750	RCPT	BOOM C4 EXAM LT. CKT	2	20	1	20	2	BOOM C2 RECEPT. CKT	RCPT	200	4
-----	----	---	----------	--	|	2	|	--	----------	---	----	--
5	100	RCPT	BOOM C4 EMS BRAKES CKT.	2	20	1	20	2	BOOM C2 EMS BRAKES CKT.	RCPT	100	6
-----	----	---	----------	--	|	2	|	--	----------	---	----	--
7			SPARE	2	20	1	20	2	REC: HYBRID 1-SS1302	RCPT	400	8
-----	----	---	----------	--	|	2	|	--	----------	---	----	--
9	400	RCPT	REC: HYBRID 1-SS1302	2	20	1	20	2	REC: HYBRID 1-SS1302	RCPT	800	10
-----	----	---	----------	--	|	2	|	--	----------	---	----	--
11	400	RCPT	REC: HYBRID 1-SS1302	2	20	1	20	2				12
-----	----	---	----------	--	|	2	|	--	----------	---	----	--

ISOLATION PANEL: H1CIP8A	CONNECTED KVA: PH-A	PH-B	PH-C	TOTAL	DEMAND FACTOR	KVA	CONT. FACT	SIZING AMPS: TOTAL	PH-A	PH-B	PH-C
Receptacle	1.9	1.9	0.0	3.8	1	3.8	1	18.5	18.5	18.5	0.0
Transformer Losses	0.1	0.1	0.0	0.1	1	0.1	1	0.6	0.6	0.6	0.0
Spare					0.2	0.8	1	3.8	3.8	3.8	0.0
TOTAL KVA:	2.0	2.0	0.0	4.0		4.8	SEC.	22.9	22.9	22.9	0.0
TOTAL AMPS:	19.1	19.1	0.0	19.1			PRI.	0.0	0.0	0.0	0.0

ISOLATION PANEL: H1CIP8B

120 VOLTS, 1 PHASE, 2 WIRE
30 AMP MAIN BKR, FLUSH MTD.
10000 AIC LABELED

W/GRD. BUS — 10 kVA ISOLATION TRANSFORMER

CIRC NO.	LOAD V. A.	LOAD TYPE	LOAD DESCRIPTION	P.	AMP SIZE	PHASE	AMP SIZE	P.	LOAD DESCRIPTION	LOAD TYPE	LOAD V. A.	CIRC NO.
1	200	RCPT	BOOM C1 RECEPT. CKT	2	20	1	20	2	BOOM C3 MONITOR CKT	RCPT	500	2
-----	----	---	----------	--	|	2	|	--	----------	---	----	--
3	200	RCPT	BOOM C1 RECEPT. CKT	2	20	1	20	2	BOOM C3 EXAM LT. CKT	RCPT	750	4
-----	----	---	----------	--	|	2	|	--	----------	---	----	--
5	200	RCPT	BOOM C1 RECEPT. CKT	2	20	1	20	2	BOOM C3 EMS BRAKES CKT	RCPT	100	6
-----	----	---	----------	--	|	2	|	--	----------	---	----	--
7	200	RCPT	BOOM C1 RECEPT. CKT	2	20	1	20	2	REC: HYBRID 1-SS1302	RCPT	400	8
-----	----	---	----------	--	|	2	|	--	----------	---	----	--
9	100	RCPT	BOOM C1 EMS BRAKES CKT	2	20	1	20	2	REC. HYBRID 1-SS1302	RCPT	400	10
-----	----	---	----------	--	|	2	|	--	----------	---	----	--
11	400	RCPT	REC: HYBRID 1-SS1302	2	20	1	20	2				12
-----	----	---	----------	--	|	2	|	--	----------	---	----	--

ISOLATION PANEL: H1CIP8B	CONNECTED KVA: PH-A	PH-B	PH-C	TOTAL	DEMAND FACTOR	KVA	CONT. FACT	SIZING AMPS: TOTAL	PH-A	PH-B	PH-C
Receptacle	1.7	1.7	0.0	3.4	1	3.4	1	16.6	16.6	16.6	0.0
Transformer Losses	0.1	0.1	0.0	0.1	1	0.1	1	0.6	0.6	0.6	0.0
Spare					0.2	0.7	1	3.4	3.4	3.4	0.0
TOTAL KVA:	1.8	1.8	0.0	3.6		4.3	SEC.	20.6	20.6	20.6	0.0
TOTAL AMPS:	17.1	17.1	0.0	17.1			PRI.	0.0	0.0	0.0	0.0

② EXIST. PANEL: HPQLC

208Y/120 VOLTS, 3 PHASE, 4 WIRE
80 AMP MAIN BKR, SURFACE MTD.
65000 AIC LABELED

W/GRD. BUS

	CIRC NO.	LOAD V. A.	LOAD TYPE	LOAD DESCRIPTION	P.	AMP SIZE	PHASE	AMP SIZE	P.	LOAD DESCRIPTION	LOAD TYPE	LOAD V. A.	CIRC NO.	
	1		EX	EXISTING	1	20	A	20	1	EXISTING	EX		2	
	3		EX	EXISTING	1	20	B	20	1	EXISTING	EX		4	
	5		EX	EXISTING	1	20	C	20	1	EXISTING	EX		6	
	7		EX	EXISTING	1	20	A	20	1	EXISTING	EX		8	
	9		EX	EXISTING	1	20	B	20	1	EXISTING	EX		10	
	11		EX	EXISTING	1	20	C	20	1	EXISTING	EX		12	
	13		EX	EXISTING	1	20	A	20	1	EXISTING	EX		14	
	15		EX	EXISTING	1	20	B	20	1	EXISTING	EX		16	
	17		EX	EXISTING	1	20	C	20	1	EXISTING	EX		18	
	19		EX	EXISTING	1	20	A	20	1	EXISTING	EX		20	
①	21	360	RCPT	REC. ROOFTOP AT RTU	1	20	B	20	1	EF-01	MOTR	1176	22	①
①	23	500	POWR	RTU-01 UV LIGHTS	1	20	C	20	1	RTU-01 INTERNAL LIGHT/RECPT.	POWR	500	24	①

① PROVIDE NEW CIRCUIT BREAKER AS INDICATED.

② EXISTING CIRCUIT BREAKERS AND LOADS TO REMAIN UNLESS OTHERWISE NOTED. UPDATE PANEL SCHEDULE WITH ALL CHANGES.

EXIST. PANEL: HPQLC	CONNECTED KVA: PH-A	PH-B	PH-C	TOTAL	DEMAND FACTOR	KVA	CONT. FACT	SIZING AMPS: TOTAL	PH-A	PH-B	PH-C
Receptacle	0.0	0.4	0.0	0.4	1	0.4	1	1.0	0.0	3.0	0.0
Largest Motor	0.0	0.0	0.0	0.0	1	0.0	0.25	0.8	0.0	2.4	0.0
Motor	0.0	1.2	0.0	1.2	1	1.2	1	3.3	0.0	9.8	0.0
Power	0.0	0.0	1.0	1.0	1	1.0	1	2.8	0.0	0.0	8.3
Spare					0.2	0.5	1	1.4	1.4	1.4	1.4
TOTAL KVA:	0.0	1.5	1.0	2.5		3.0	TOTAL AMPS:	PH-A	PH-B	PH-C	
TOTAL AMPS:	0.0	12.8	8.3	7.0				9.3	1.4	16.7	9.7

② EXIST. PANEL: H1CLH

208Y/120 VOLTS, 3 PHASE, 4 WIRE
25 AMP MAIN BKR, SURFACE MTD.
65000 AIC LABELED

W/GRD. BUS

	CIRC NO.	LOAD V. A.	LOAD TYPE	LOAD DESCRIPTION	P.	AMP SIZE	PHASE	AMP SIZE	P.	LOAD DESCRIPTION	LOAD TYPE	LOAD V. A.	CIRC NO.
	1		EX	EXISTING	1	20	A	20	1	EXISTING	EX		2
	3		EX	EXISTING	1	20	B	20	1	EXISTING	EX		4
	5		EX	EXISTING	1	20	C	20	1	EXISTING	EX		6
①	7	500	POWR	FUSTAT CONNECTION CORR. 1-SS1301	1	20	A	20	1	EXISTING	EX		8
①	9	400	RCPT	REC: EQUIP 1-SS1304	1	20	B	20	1	EXISTING	EX		10
①	11	400	RCPT	REC: EQUIP 1-SS1304	1	20	C	20	1	EXISTING	EX		12
①	13	400	RCPT	REC: CONTROL 1-SS1303	1	20	A	20	1	EXISTING	EX		14
①	15	400	RCPT	REC: CONTROL 1-SS1303	1	20	B	20	1	EXISTING	EX		16
①	17	400	RCPT	REC: CONTROL 1-SS1303	1	20	C	20	1	EXISTING	EX		18
	19	1100	LIGHT	LTG. HYBRID OR, CONTROL, EQUP.	1	20	A	20	1	EXISTING	EX		20
	21		EX	SPARE	1	20	B	20	1	EXISTING	EX		22
	23		EX	SPARE	1	20	C	20	1	EXISTING	EX		24
	25		EX	SPARE	1	20	A	20	1	EXISTING	EX		26
	27		EX	SPARE	1	20	B	20	1	EXISTING	EX		28
	29		EX	SPARE	1	20	C	20	1	EXISTING	EX		30
	31		EX	SPARE	1	20	A	20	1	EXISTING	EX		32
	33		EX	SPARE	1	20	B	20	1	EXISTING	EX		34
	35		EX	SPARE	1	20	C	20	1	EXISTING	EX		36
	37		EX	SPARE	1	20	A	20	1	SPARE	EX		38
	39		EX	SPARE	1	20	B	20	1	SPARE	EX		40
	41		EX	SPARE	1	20	C	20	1	SPARE	EX		42

① UTILIZE EXISTING CIRCUIT BREAKER.

② EXISTING CIRCUIT BREAKERS AND LOADS TO REMAIN UNLESS OTHERWISE NOTED. UPDATE PANEL SCHEDULE WITH ALL CHANGES.

EXIST. PANEL: H1CLH	CONNECTED KVA: PH-A	PH-B	PH-C	TOTAL	DEMAND FACTOR	KVA	CONT. FACT	SIZING AMPS: TOTAL	PH-A	PH-B	PH-C
Lighting	1.1	0.0	0.0	1.1	1	1.1	1.25	3.8	11.5	0.0	0.0
Receptacle	0.4	0.8	0.8	2.0	1	2.0	1	5.6	3.3	6.7	6.7
Power	0.5	0.0	0.0	0.5	1	0.5	1	1.4	4.2	0.0	0.0
Spare					0.2	0.7	1	2.0	2.0	2.0	2.0
TOTAL KVA:	2.0	0.8	0.8	3.6		4.3	TOTAL AMPS:	PH-A	PH-B	PH-C	
TOTAL AMPS:	16.7	6.7	6.7	10.0				12.8	21.0	8.7	8.7

② EXIST. PANEL: H1NLH

208Y/120 VOLTS, 3 PHASE, 4 WIRE
25 AMP MAIN BKR, SURFACE MTD.
65000 AIC LABELED

W/GRD. BUS

	CIRC NO.	LOAD V. A.	LOAD TYPE	LOAD DESCRIPTION	P.	AMP SIZE	PHASE	AMP SIZE	P.	LOAD DESCRIPTION	LOAD TYPE	LOAD V. A.	CIRC NO.
①	1	800	RCPT	REC: CONTROL 1-SS1303	1	20	A	20	1	EXISTING	EX		2
①	3	1200	RCPT	REC: HYBRID 1-SS1302	1	20	B	20	1	EXISTING	EX		4
	5		EX	EXISTING	1	20	C	20	1	EXISTING	EX		6
	7		EX	EXISTING	1	20	A	20	1	EXISTING	EX		8
①	9	400	RCPT	REC: CORRIDOR 1-SS1301	1	20	B	20	1	EXISTING	EX		10
①	11	1400	RCPT	REC: STORAGE 1-SS1306	1	20	C	20	1	EXISTING	EX		12
①	13	500	LGHT	LTG. STORAGE 1-SS1306	1	20	A	20	1	EXISTING	EX		14
①	15	500	POWR	TEMP. CONTROL PANEL	1	20	B	20	1	EXISTING	EX		16
	17		EX	SPARE	1	20	C	20	1	EXISTING	EX		18
	19		EX	SPARE	1	20	A	20	1	EXISTING	EX		20
	21		EX	SPARE	1	20	B	20	1	SPARE	EX		22
	23		EX	SPARE	1	20	C	20	1	SPARE	EX		24
	25		EX	SPARE	1	20	A	20	1	SPARE	EX		26
	27		EX	SPARE	1	20	B	20	1	SPARE	EX		28
	29		EX	SPARE	1	20	C	20	1	SPARE	EX		30
	31		EX	SPARE	1	20	A	20	1	SPARE	EX		32
	33		EX	SPARE	1	20	B	20	1	SPARE	EX		34
	35		EX	SPARE	1	20	C	20	1	SPARE	EX		36
	37		EX	SPARE	1	20	A	20	1	SPARE	EX		38
	39		EX	SPARE	1	20	B	20	1	SPARE	EX		40
	41		EX	SPARE	1	20	C	20	1	SPARE	EX		42

① UTILIZE EXISTING CIRCUIT BREAKER.

② EXISTING CIRCUIT BREAKERS AND LOADS TO REMAIN UNLESS OTHERWISE NOTED. UPDATE PANEL SCHEDULE WITH ALL CHANGES.

EXIST. PANEL: H1NLH	CONNECTED KVA: PH-A	PH-B	PH-C	TOTAL	DEMAND FACTOR	KVA	CONT. FACT	SIZING AMPS: TOTAL	PH-A	PH-B	PH-C
Lighting	0.5	0.0	0.0	0.5	1	0.5	1.25	1.7	5.2	0.0	0.0
Receptacle	0.8	1.6	1.4	3.8	1	3.8	1	10.6	6.7	13.3	11.7
Power	0.0	0.5	0.0	0.5	1	0.5	1	1.4	0.0	4.2	0.0
Spare					0.2	1.0	1	2.7	2.7	2.7	2.7
TOTAL KVA:	1.3	2.1	1.4	4.8		5.8	TOTAL AMPS:	PH-A	PH-B	PH-C	
TOTAL AMPS:	10.8	17.5	11.7	13.3				16.3	14.5	20.2	14.3

STATE OF MISSOURI
DARIN DOUGLAS GROINDER
NUMBER PE-2004017162
PROFESSIONAL ENGINEER

ACI BOLAND ARCHITECTS
1710 Wyandotte
Kansas City, MO 64108
T: 816.763.9600

ACI/Boland, Inc.
Kansas City | St. Louis
Licensee's Certificate of Authority Number:

STRUCTURAL, MECHANICAL, ELECTRICAL, & PLUMBING CONSULTANT

PEC
Professional Engineering Consultants, P.A.
623 Massachusetts Street, Suite 200
Lawrence, KS 66044
State Certificate of Authority: #000465F
Phone Number: 785.842.6464

LEES SUMMIT MEDICAL CENTER

HYBRID OR ADDITION
2100 SE Blue Pkwy, Lee's Summit, MO
64063

Date	3/23/20
Job Number	3-19058
Drawn By	MJU
Checked By	RWL

Revision

Number	Date	Description

E0.3

© 2020 ACI/BOLAND, Inc

ELECTRICAL SCHEDULES

BIM 360://190711-000 - Lee's Summit Med Cntr Hybrid OR Addn/190711-000-MASTER ELEC-R19.rvt

3/23/2020 10:39:24 AM

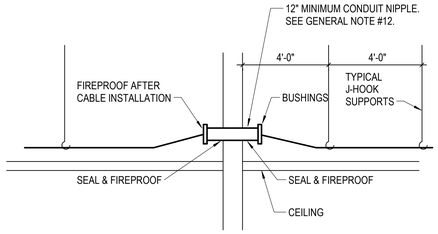

9 TYPICAL THRU-WALL CONDUIT SLEEVE

N0 SCALE

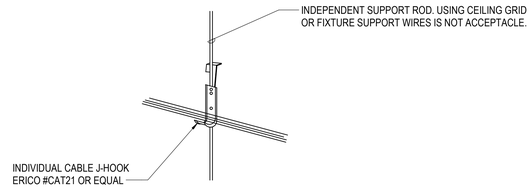

8 J-HOOK MOUNTING DETAIL

N0 SCALE

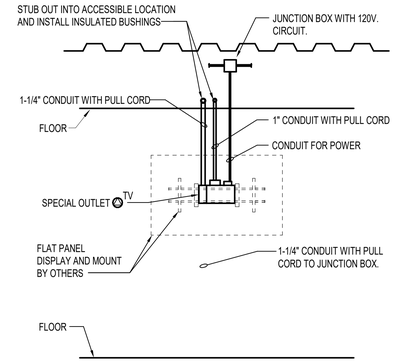

7 TYPICAL TELEVISION OUTLET DETAIL

N0 SCALE

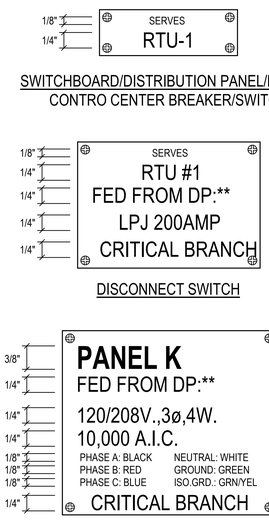

NOTE:
SEE SPECIFICATION SECTION 260500
FOR NAME PLATE COLOR REQUIREMENTS

6 TYPICAL NAMEPLATES

N0 SCALE

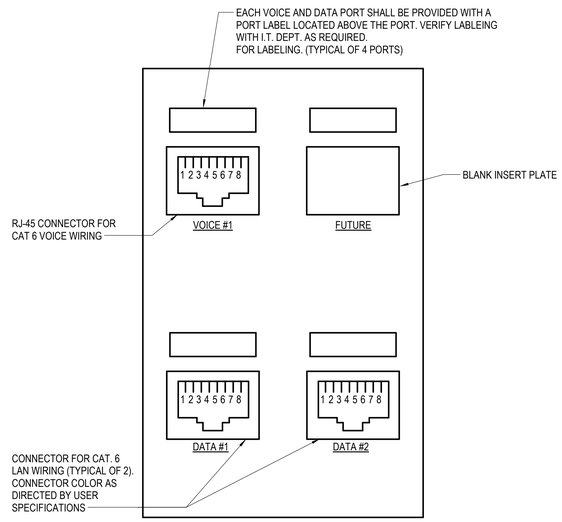

5 TYPICAL TELECOM OUTLET DETAIL

N0 SCALE

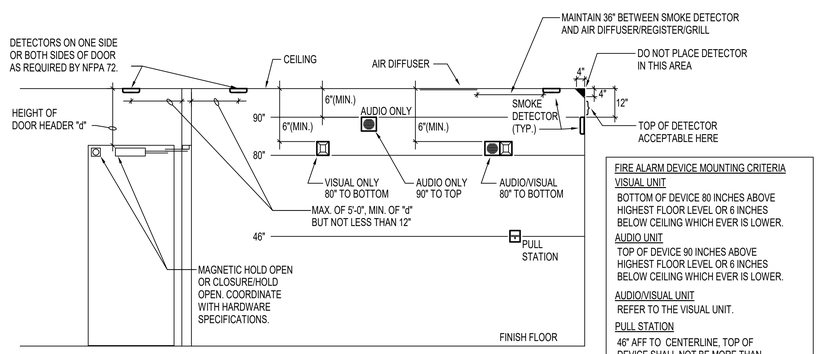

FIRE ALARM DEVICE MOUNTING CRITERIA

VISUAL UNIT
BOTTOM OF DEVICE 80 INCHES ABOVE HIGHEST FLOOR LEVEL OR 6 INCHES BELOW CEILING WHICH EVER IS LOWER.

AUDIO UNIT
TOP OF DEVICE 90 INCHES ABOVE HIGHEST FLOOR LEVEL OR 6 INCHES BELOW CEILING WHICH EVER IS LOWER.

AUDIO/VISUAL UNIT
REFER TO THE VISUAL UNIT.

PULL STATION
46" AFF TO CENTERLINE, TOP OF DEVICE SHALL NOT BE MORE THAN 48" AFF

GENERAL NOTE
THESE GUIDELINES SHALL BE USED UNLESS MOUNTING HEIGHTS HAVE BEEN SPECIFIED OTHERWISE ON THE DRAWINGS.

4 F.A. DEVICE MOUNTING DETAIL

N0 SCALE

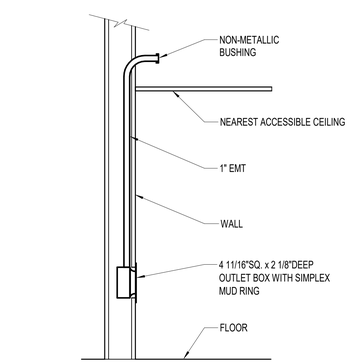

3 TELECOMM OUTLET DETAIL

N0 SCALE

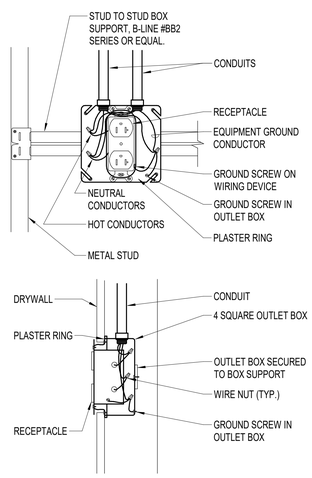

2 TYPICAL RECEPTACLE MOUNTING DETAIL

N0 SCALE

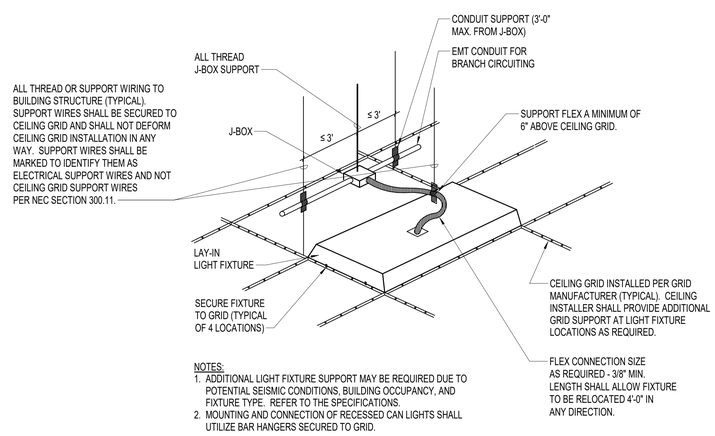

NOTES:
1. ADDITIONAL LIGHT FIXTURE SUPPORT MAY BE REQUIRED DUE TO POTENTIAL SEISMIC CONDITIONS, BUILDING OCCUPANCY, AND FIXTURE TYPE. REFER TO THE SPECIFICATIONS.
2. MOUNTING AND CONNECTION OF RECESSED CAN LIGHTS SHALL UTILIZE BAR HANGERS SECURED TO GRID.

1 TYPICAL LAY-IN FIXTURE INSTALLATION

N0 SCALE

ACI BOLAND ARCHITECTS
1710 Wyandotte
Kansas City, MO 64108
T: 816.763.9600

ACI/Boland, Inc.
Kansas City | St. Louis
Licensee's Certificate of Authority Number:

STRUCTURAL, MECHANICAL, ELECTRICAL, & PLUMBING CONSULTANT

PEC
Professional Engineering Consultants, P.A.
623 Massachusetts Street, Suite 200
Lawrence, KS 66044
State Certificate of Authority: #000465F
Phone Number: 785.842.6464

LEES SUMMIT MEDICAL CENTER

HYBRID OR ADDITION
2100 SE Blue Pkwy, Lee's Summit, MO
64063

Date	3/23/20
Job Number	3-19058
Drawn By	MJU
Checked By	RWL

Revision

Number	Date	Description

E0.4

© 2020 ACI/BOLAND, Inc

ELECTRICAL DETAILS

BIM 360://190711-000 - Lee's Summit Med Cntr Hybrid OR Addn/190711-000-MASTER ELEC-R19.rvt

3/23/2020 10:39:28 AM

N

1 ELECTRICAL DEMOLITION PLAN - 1ST FLOOR
3/32" = 1'-0"

0' 4' 8' 16'

DEMOLITION PLAN NOTES:

1. DEMOLITION PLANS SHOW THE GENERAL EXTENT OF THE ELECTRICAL DEMOLITION WORK. THE ELECTRICAL CONTRACTOR SHALL DISCONNECT ELECTRICAL SERVICES TO ALL EQUIPMENT BEING REMOVED. SEE MECHANICAL PLANS. OWNER SHALL HAVE THE OPTION TO RETAIN REUSABLE ITEMS, SUCH AS COVERPLATES, RECEPTACLES, LIGHTS, PANELS, ETC. NOT BEING USED IN THE FINISHED WORK. COORDINATE WITH OWNER PRIOR TO STARTING DEMOLITION. PROPERLY AND LEGALLY DISPOSE OF ALL EQUIPMENT AND MATERIALS BEING REMOVED.
2. REMOVE ALL CONDUIT LEFT EXPOSED BY REMOVAL OF WALLS AND CEILINGS IN REMODELED AREAS. PLUG BOTH ENDS OF REMAINING CONDUIT IN WALL OR FLOOR WHERE CUT.
3. ELECTRICAL OUTLETS, ETC. POSSIBLY CONCEALED BY STORAGE SHELVING, CASEWORK, FURNITURE, ETC. ARE NOT SHOWN AND MAY REQUIRE REMOVAL.
4. GENERAL CONTRACTOR SHALL BE RESPONSIBLE FOR PATCHING ALL OPENINGS IN EXISTING CONSTRUCTION AFTER REMOVAL OF EQUIPMENT AND ELECTRICAL DEVICES, ETC.
5. WHERE EQUIPMENT AND OTHER DEVICES ARE BEING REMOVED, THE CIRCUITING SHALL BE REMOVED, IF POSSIBLE, BACK TO POINT OF SUPPLY. WHERE REQUIRED, CIRCUITING SHALL BE EXTENDED TO MAINTAIN CONTINUITY OF THE CIRCUIT OR OPERATION OF THE SYSTEM.
6. ALL DEVICES SHOWN DASHED ON THE DEMOLITION PLAN(S) SHALL BE REMOVED, UNLESS NOTED OTHERWISE.
7. PROVIDE MATCHING BLANK COVERPLATES WHERE DEVICES ARE BEING REMOVED FROM EXISTING WALLS TO REMAIN.
8. FIELD VERIFY ALL EXISTING CONDITIONS AND DIMENSIONS PRIOR TO BEGINNING WORK.

STATE OF MISSOURI
DARIN DOUGLAS CROWDER
NUMBER PE-2004017152
PROFESSIONAL ENGINEER

ACI BOLAND ARCHITECTS
1710 Wyandotte
Kansas City, MO 64108
T: 816.763.9600

ACI/Boland, Inc.
Kansas City | St. Louis
Licensee's Certificate of Authority Number:

STRUCTURAL, MECHANICAL, ELECTRICAL, & PLUMBING CONSULTANT

PEC
Professional Engineering Consultants, P.A.
623 Massachusetts Street, Suite 200
Lawrence, KS 66044
State Certificate of Authority: #000465F
Phone Number: 785.842.6464

LEES SUMMIT MEDICAL CENTER

HYBRID OR ADDITION

2100 SE Blue Pkwy, Lee's Summit, MO
64063

Date	3/23/20
Job Number	3-19058
Drawn By	MJU
Checked By	RWL

Revision

Number	Date	Description

E1.1

© 2020 ACI/BOLAND, Inc

ELECTRICAL DEMOLITION PLAN

BIM 360://190711-000 - Lee's Summit Med Cntr Hybrid OR Addn/190711-000-MASTER ELEC-R19.rvt

3/23/2020 10:39:32 AM

1 POWER PLAN - 1ST FLOOR OVERALL
3/32" = 1'-0"

N

0' 4' 8' 16'

POWER PLAN NOTES:

1. BRANCH CIRCUITS ARE INDICATED AS ONE CIRCUIT HOME RUNS WITH INDIVIDUAL NEUTRALS. A MAXIMUM OF THREE CIRCUITS (MAXIMUM OF THREE PHASE CONDUCTORS) MAY BE GROUPED IN A SINGLE CONDUIT. WHERE MULTIPLE CIRCUITS ARE LOCATED IN THE SAME RACEWAY, JUNCTION BOX OR ENCLOSURE, NEUTRALS SHALL BE MARKED OR LABELED TO INDICATE WHICH CIRCUIT THEY ARE ASSOCIATED WITH. SEE SPECIFICATION SECTION "LOW VOLTAGE ELECTRICAL POWER CONDUCTORS AND CABLES" FOR ADDITIONAL INFORMATION.
2. A GROUND CONDUCTOR SIZED PER N.E.C. ARTICLE 250 IS REQUIRED IN ALL CONDUITS.
3. FOR CONNECTION REQUIREMENTS TO MECHANICAL UNITS, SEE MECHANICAL EQUIPMENT CONNECTION SCHEDULE.
4. ALL PENETRATIONS IN THE RATED WALLS AND CEILINGS SHALL BE SEALED WITH A MATERIAL CAPABLE OF PREVENTING THE PASSAGE OF FLAMES AND HOT GASSES. THE SEALANT SHALL HAVE A T-RATING OF ONE HOUR.
5. ALL PIPING, CONDUIT, AND OUTLET BOXES (ELECTRIC, TELEPHONE, COMPUTER, ETC.) IN THE RATED WALLS OR CEILING SHALL BE CONSTRUCTED OF NON-COMBUSTIBLE MATERIAL.
6. OUTLET BOXES (ELECTRIC, TELEPHONE, COMPUTER, ETC.) SHALL BE LIMITED TO TWO OUTLET BOXES PER STUD SPACE. OUTLET BOXES ON OPPOSITE SIDES OF THE RATED WALLS SHALL BE SEPARATED BY A HORIZONTAL DISTANCE OF 24 INCHES.
7. FIELD VERIFY THE EXACT LOCATION OF ALL FLOOR BOXES AND POKE THROUGHS WITH ARCHITECT PRIOR TO ROUGH-IN.

STATE OF MISSOURI
DARIN DOUGLAS CROWDER
NUMBER PE-2004017152
PROFESSIONAL ENGINEER

ACI BOLAND ARCHITECTS
1710 Wyandotte
Kansas City, MO 64108
T: 816.763.9600

ACI/Boland, Inc.
Kansas City | St. Louis
Licensee's Certificate of Authority Number:

STRUCTURAL, MECHANICAL, ELECTRICAL, & PLUMBING CONSULTANT

PEC
Professional Engineering Consultants, P.A.
623 Massachusetts Street, Suite 200
Lawrence, KS 66044
State Certificate of Authority: #000465F
Phone Number: 785.842.6464

LEES SUMMIT MEDICAL CENTER

HYBRID OR ADDITION
2100 SE Blue Pkwy, Lee's Summit, MO
64063

Date	3/23/20
Job Number	3-19058
Drawn By	Author
Checked By	Checker

Revision

Number	Date	Description

E4.1

© 2020 ACI/BOLAND, Inc

POWER PLAN - 1ST FLOOR OVERALL

BIM 360://190711-000 - Lee's Summit Med Cntr Hybrid OR Addn/190711-000-MASTER ELEC-R19.rvt

3/23/2020 10:39:34 AM

2 ENLARGED POWER PLAN - PENTHOUSE ABOVE LEVEL 1
1/4" = 1'-0"

POWER PLAN NOTES:

1. BRANCH CIRCUITS ARE INDICATED AS ONE CIRCUIT HOME RUNS WITH INDIVIDUAL NEUTRALS. A MAXIMUM OF THREE CIRCUITS (MAXIMUM OF THREE PHASE CONDUCTORS) MAY BE GROUPED IN A SINGLE CONDUIT. WHERE MULTIPLE CIRCUITS ARE LOCATED IN THE SAME RACEWAY, JUNCTION BOX OR ENCLOSURE, NEUTRALS SHALL BE MARKED OR LABELED TO INDICATE WHICH CIRCUIT THEY ARE ASSOCIATED WITH. SEE SPECIFICATION SECTION "LOW VOLTAGE ELECTRICAL POWER CONDUCTORS AND CABLES" FOR ADDITIONAL INFORMATION.
2. A GROUND CONDUCTOR SIZED PER N.E.C. ARTICLE 250 IS REQUIRED IN ALL CONDUITS.
3. FOR CONNECTION REQUIREMENTS TO MECHANICAL UNITS, SEE MECHANICAL EQUIPMENT CONNECTION SCHEDULE.
4. ALL PENETRATIONS IN THE RATED WALLS AND CEILINGS SHALL BE SEALED WITH A MATERIAL CAPABLE OF PREVENTING THE PASSAGE OF FLAMES AND HOT GASSES. THE SEALANT SHALL HAVE A T-RATING OF ONE HOUR.
5. ALL PIPING, CONDUIT, AND OUTLET BOXES (ELECTRIC, TELEPHONE, COMPUTER, ETC.) IN THE RATED WALLS OR CEILING SHALL BE CONSTRUCTED OF NON-COMBUSTIBLE MATERIAL.
6. OUTLET BOXES (ELECTRIC, TELEPHONE, COMPUTER, ETC.) SHALL BE LIMITED TO TWO OUTLET BOXES PER STUD SPACE. OUTLET BOXES ON OPPOSITE SIDES OF THE RATED WALLS SHALL BE SEPARATED BY A HORIZONTAL DISTANCE OF 24 INCHES.
7. FIELD VERIFY THE EXACT LOCATION OF ALL FLOOR BOXES AND POKE THROUGHS WITH ARCHITECT PRIOR TO ROUGH-IN.

(#) KEYED NOTES:

P1 PROVIDE 120V.1P.20A. CONNECTION TO EXISTING CIRCUIT BREAKER IN EXISTING PANELBOARD AS INDICATED. UPDATE PANEL DIRECTORY.

P2 PROVIDE 120V.1P.20A. CONNECTION TO NEAREST EXISTING LIFE SAFETY CIRCUIT.

P3 PROVIDE 120V. CONNECTION TO DOOR OPERATOR PROVIDED BY DOOR HARDWARE SUPPLIER. INTERFACE POWER/CONTROLS WITH FIRE ALARM CONTROL PANEL. VERIFY ALL REQUIREMENTS AS NECESSARY.

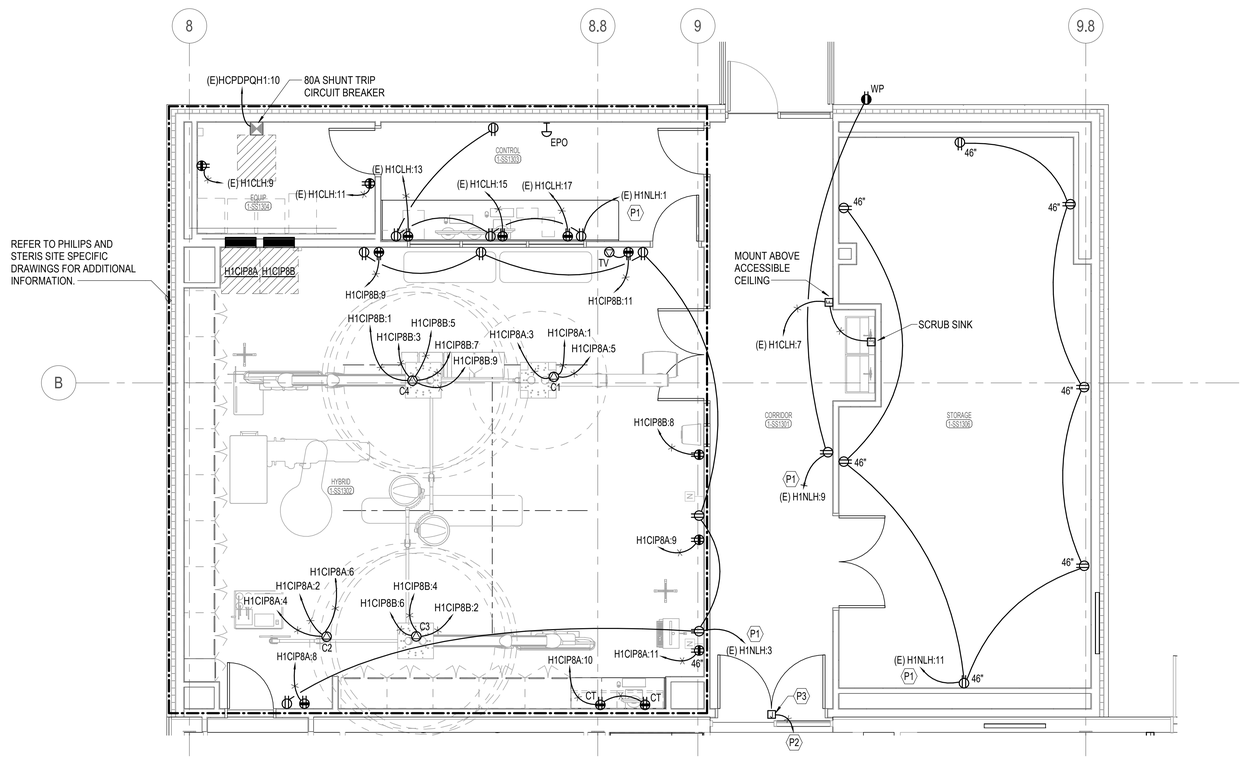

N

1 ENLARGED POWER PLAN - HYBRID OR ADDITION
1/4" = 1'-0"

SPECIAL OUTLETS

MARK	DESCRIPTION
C1	CEILING MOUNTED MEDICAL BOOM. PROVIDE FOUR (4) 120V.1P.20A. ISOLATION CIRCUITS FOR CONNECTIONS TO RECEPTACLES. PROVIDE ONE (1) 120V.1P.20A. ISOLATION CIRCUIT FOR CONNECTION TO EMS BRAKES. VERIFY WITH STERIS SITE SPECIFIC DRAWINGS PRIOR TO INSTALLATION.
C2	CEILING MOUNTED MEDICAL BOOM: PROVIDE TWO (2) 120V.1P.20A. ISOLATION CIRCUITS FOR CONNECTIONS TO RECEPTACLES. PROVIDE ONE (1) 120V.1P.20A. ISOLATION CIRCUIT FOR CONNECTION TO EMS BRAKES. VERIFY ALL CONNECTION REQUIREMENTS WITH STERIS SITE SPECIFIC DRAWINGS PRIR TO INSTALLATION.
C3	CEILING MOUNTED MEDICAL BOOM. PROVIDE TWO (2) 120V.1P.20A. ISOLATION CIRCUITS FOR CONNECTIONS TO MONITOR AND SURGICAL LIGHT. PROVIDE ONE (1) 120V.1P.20A. ISOLATION CIRCUIT FOR CONNECTION TO EMS BRAKES. VERIFY WITH STERIS SITE SPECIFIC DRAWINGS PRIOR TO INSTALLATION.
C4	CEILING MOUNTED MEDICAL BOOM. PROVIDE TWO (2) 120V.1P.20A. ISOLATION CIRCUITS FOR CONNECTIONS TO MONITOR AND SURGICAL LIGHT. PROVIDE ONE (1) 120V.1P.20A. ISOLATION CIRCUIT FOR CONNECTION TO EMS BRAKES. VERIFY WITH STERIS SITE SPECIFIC DRAWINGS PRIOR TO INSTALLATION.
TV	TV/FLAT PANEL LOCATION: PROVIDE FSR#PWB-200 RECESSED WALL BOX. PROVIDE (1) 20A 125V DUPLEX GROUNDED RECEPTACLE, (1) DATA OUTLET, AND (1) CATV OUTLET. PROVIDE MATCHING COVERPLATE AND ALL ASSOCIATED MOUNTING HARDWARE. COORDINATE MOUNTING LOCATION SUCH THAT WALL BOX IS COMPLETELY HIDDEN BEHIND FLAT PANEL DISPLAY AND DOES NOT INTERFERE WITH WALL-MOUNT BRACKET. REFERENCE DETAIL 9/E0.4 FOR ADDITIONAL REQUIREMENTS.
WAP	WIRELESS ACCESS POINT. PROVIDE TWO (2) YELLOW CAT 6A CABLES WITH 30 FT. EXCESS COILED ABOVE CEILING. TERMINATE TO BLACK 8P8C CONNECTOR.

STATE OF MISSOURI
DARIN DOUGLAS CRONDER
NUMBER PE-2004017152
PROFESSIONAL ENGINEER

ACI BOLAND ARCHITECTS
1710 Wyandotte
Kansas City, MO 64108
T: 816.763.9600

ACI/Boland, Inc.
Kansas City | St. Louis
Licensee's Certificate of Authority Number:

STRUCTURAL, MECHANICAL, ELECTRICAL, & PLUMBING CONSULTANT

PEC
Professional Engineering Consultants, P.A.
623 Massachusetts Street, Suite 200
Lawrence, KS 66044
State Certificate of Authority: #000465F
Phone Number: 785.842.6464

LEES SUMMIT MEDICAL CENTER

HYBRID OR ADDITION
2100 SE Blue Pkwy, Lee's Summit, MO
64063

Date	3/23/20
Job Number	3-19058
Drawn By	MJU
Checked By	RWL

Revision

Number	Date	Description

E4.2

© 2020 ACI/BOLAND, Inc

ENLARGED POWER PLAN - HYBRID O.R. ADDITION

BIM 360://190711-000 - Lee's Summit Med Cntr Hybrid OR Addn/190711-000-MASTER ELEC-R19.rvt

3/23/2020 10:39:37 AM

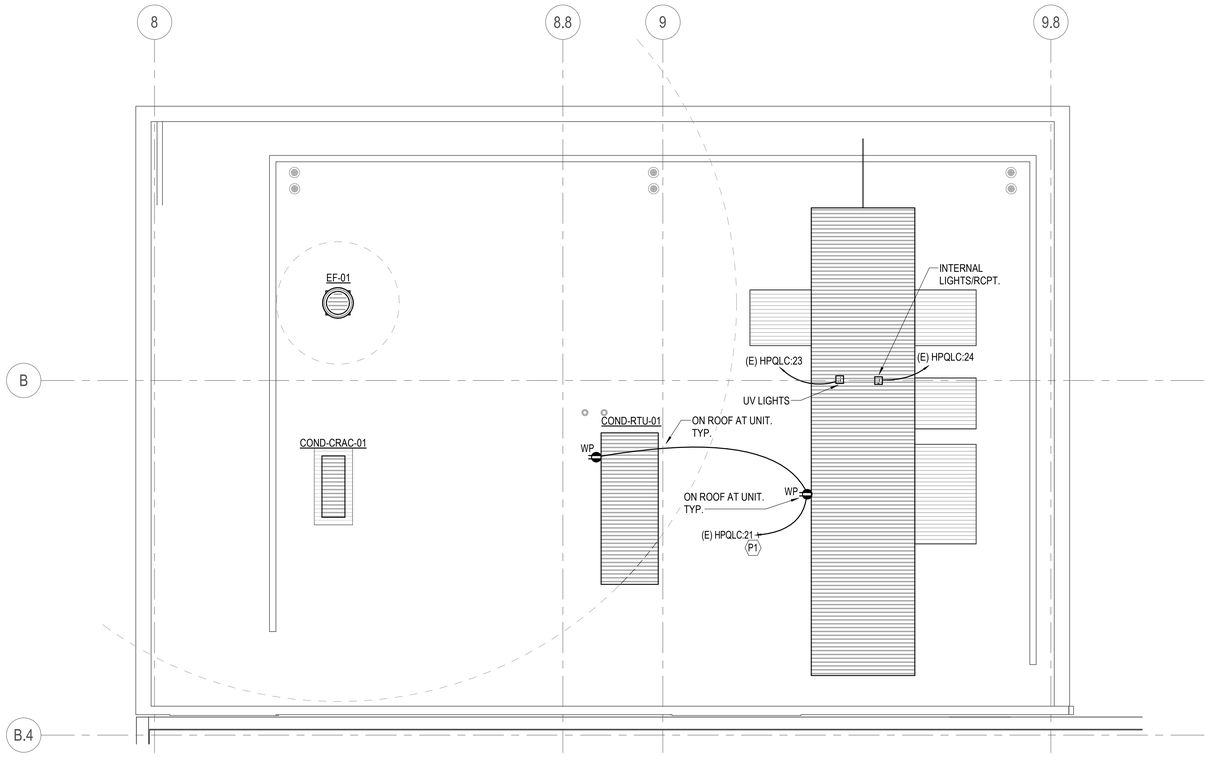

2 ENLARGED EQUIPMENT PLAN - HYBRID OR ADDITION ROOF
1/4" = 1'-0"

0' 2' 4' 8'

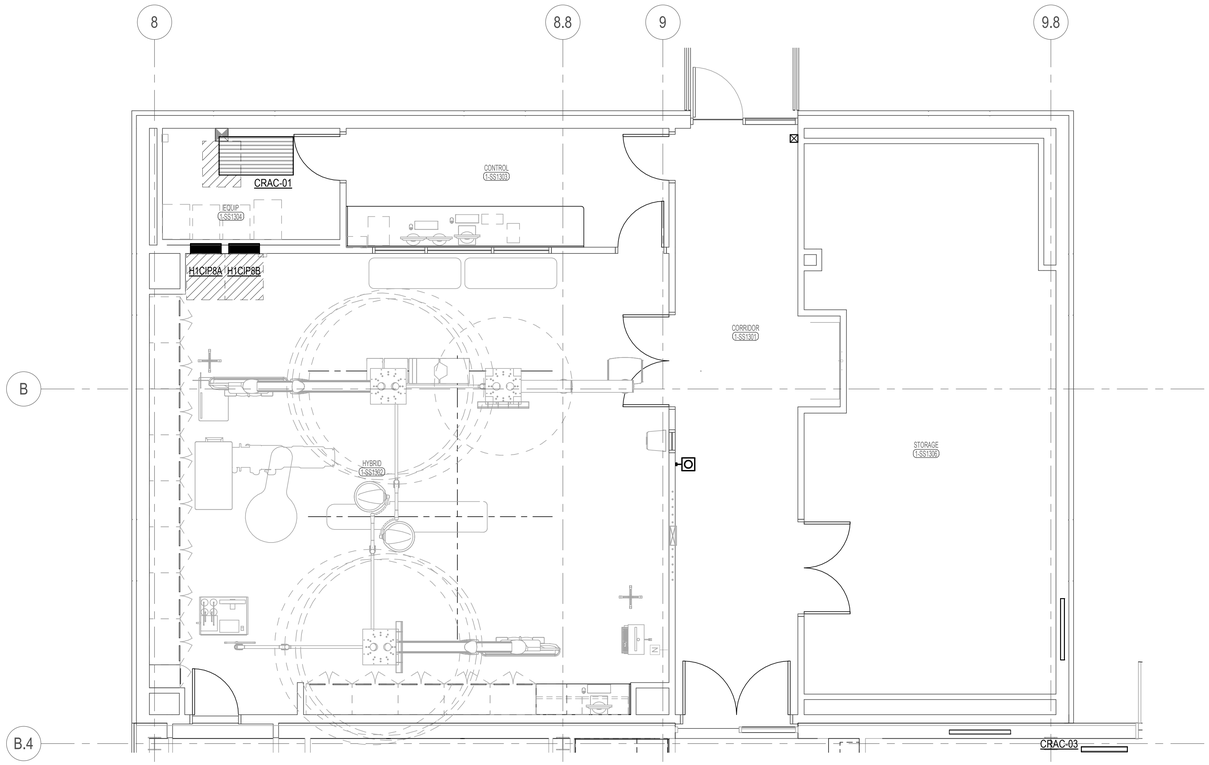

N

1 ENLARGED EQUIPMENT PLAN - HYBRID OR ADDITION
1/4" = 1'-0"

0' 2' 4' 8'

POWER PLAN NOTES:

1. BRANCH CIRCUITS ARE INDICATED AS ONE CIRCUIT HOME RUNS WITH INDIVIDUAL NEUTRALS. A MAXIMUM OF THREE CIRCUITS (MAXIMUM OF THREE PHASE CONDUCTORS) MAY BE GROUPED IN A SINGLE CONDUIT. WHERE MULTIPLE CIRCUITS ARE LOCATED IN THE SAME RACEWAY, JUNCTION BOX OR ENCLOSURE, NEUTRALS SHALL BE MARKED OR LABELED TO INDICATE WHICH CIRCUIT THEY ARE ASSOCIATED WITH. SEE SPECIFICATION SECTION "LOW VOLTAGE ELECTRICAL POWER CONDUCTORS AND CABLES" FOR ADDITIONAL INFORMATION.
2. A GROUND CONDUCTOR SIZED PER N.E.C. ARTICLE 250 IS REQUIRED IN ALL CONDUITS.
3. FOR CONNECTION REQUIREMENTS TO MECHANICAL UNITS, SEE MECHANICAL EQUIPMENT CONNECTION SCHEDULE.
4. ALL PENETRATIONS IN THE RATED WALLS AND CEILINGS SHALL BE SEALED WITH A MATERIAL CAPABLE OF PREVENTING THE PASSAGE OF FLAMES AND HOT GASSES. THE SEALANT SHALL HAVE A T-RATING OF ONE HOUR.
5. ALL PIPING, CONDUIT, AND OUTLET BOXES (ELECTRIC, TELEPHONE, COMPUTER, ETC.) IN THE RATED WALLS OR CEILING SHALL BE CONSTRUCTED OF NON-COMBUSTIBLE MATERIAL.
6. OUTLET BOXES (ELECTRIC, TELEPHONE, COMPUTER, ETC.) SHALL BE LIMITED TO TWO OUTLET BOXES PER STUD SPACE. OUTLET BOXES ON OPPOSITE SIDES OF THE RATED WALLS SHALL BE SEPARATED BY A HORIZONTAL DISTANCE OF 24 INCHES.
7. FIELD VERIFY THE EXACT LOCATION OF ALL FLOOR BOXES AND POKE THROUGHS WITH ARCHITECT PRIOR TO ROUGH-IN.

(#) KEYED NOTES:

P1 PROVIDE 120V.1P.20A. CONNECTION TO EXISTING CIRCUIT BREAKER IN EXISTING PANELBOARD AS INDICATED. UPDATE PANEL DIRECTORY.

STATE OF MISSOURI
DARIN DOUGLAS CROWDER
NUMBER PE-2004017152
PROFESSIONAL ENGINEER

ACI BOLAND ARCHITECTS
1710 Wyandotte
Kansas City, MO 64108
T: 816.763.9600

ACI/Boland, Inc.
Kansas City | St. Louis
Licensee's Certificate of Authority Number:

STRUCTURAL, MECHANICAL, ELECTRICAL, & PLUMBING CONSULTANT

PEC
Professional Engineering Consultants, P.A.
623 Massachusetts Street, Suite 200
Lawrence, KS 66044
State Certificate of Authority: #000465F
Phone Number: 785.842.6464

LEES SUMMIT MEDICAL CENTER

HYBRID OR ADDITION
2100 SE Blue Pkwy, Lee's Summit, MO
64063

Date	3/23/20
Job Number	3-19058
Drawn By	Author
Checked By	Checker

Revision

Number	Date	Description

E4.3

© 2020 ACI/BOLAND, Inc

ENLARGED EQUIPMENT PLAN - HYBRID OR ADDITION

BIM 360://190711-000 - Lee's Summit Med Cntr Hybrid OR Addn/190711-000-MASTER ELEC-R19.rvt

3/23/2020 10:39:38 AM

LIGHTING PLAN NOTES:

1. BRANCH CIRCUITS ARE INDICATED AS ONE CIRCUIT HOME RUNS WITH INDIVIDUAL NEUTRALS. A MAXIMUM OF THREE CIRCUITS (MAXIMUM OF THREE PHASE CONDUCTORS) MAY BE GROUPED IN A SINGLE CONDUIT. WHERE MULTIPLE CIRCUITS ARE LOCATED IN THE SAME RACEWAY, JUNCTION BOX OR ENCLOSURE, NEUTRALS SHALL BE MARKED OR LABELED TO INDICATE WHICH CIRCUIT THEY ARE ASSOCIATED WITH. SEE SPECIFICATION SECTION "LOW VOLTAGE ELECTRICAL POWER CONDUCTORS AND CABLES" FOR ADDITIONAL INFORMATION.
2. A GROUND CONDUCTOR SIZED PER N.E.C. ARTICLE 250 IS REQUIRED IN ALL CONDUITS.
3. ALL PENETRATIONS IN THE RATED WALLS AND CEILINGS SHALL BE SEALED WITH A MATERIAL CAPABLE OF PREVENTING THE PASSAGE OF FLAMES AND HOT GASSES. THE SEALANT SHALL HAVE A T-RATING OF ONE HOUR.
4. ALL PIPING, CONDUIT, AND OUTLET BOXES (ELECTRIC, TELEPHONE, COMPUTER, ETC.) IN THE RATED WALLS OR CEILING SHALL BE CONSTRUCTED OF NON-COMBUSTIBLE MATERIAL.
5. REFER TO ARCHITECTURAL REFLECTED CEILING PLANS FOR EXACT LIGHT FIXTURE LOCATIONS. VERIFY ALL DISCREPANCIES WITH ARCHITECT PRIOR TO ROUGH-IN.

(#) KEYED NOTES:

L1 PROVIDE NEW WALL BRACKET FOR EXISTING POLE MOUNT PARKING LOT LIGHTING FIXTURES. MOUNT FIXTURE AT 12" BELOW PARAPET WALL. EXTEND AND RECONNECT EXISTING SITE LIGHTING CIRCUIT.

L2 REINSTALL REMOVED WALLPACK FROM ABOVE PREVIOUS EXTERIOR DOOR. RECONNECT TO PREVIOUS EXTERIOR LIGHTING CIRCUIT AS INDICATED.

L3 PROVIDE INTERLOCK WIRING BETWEEN LOCAL OCCUPANCY SENSORS PER MANUFACTURER'S REQUIREMENTS.

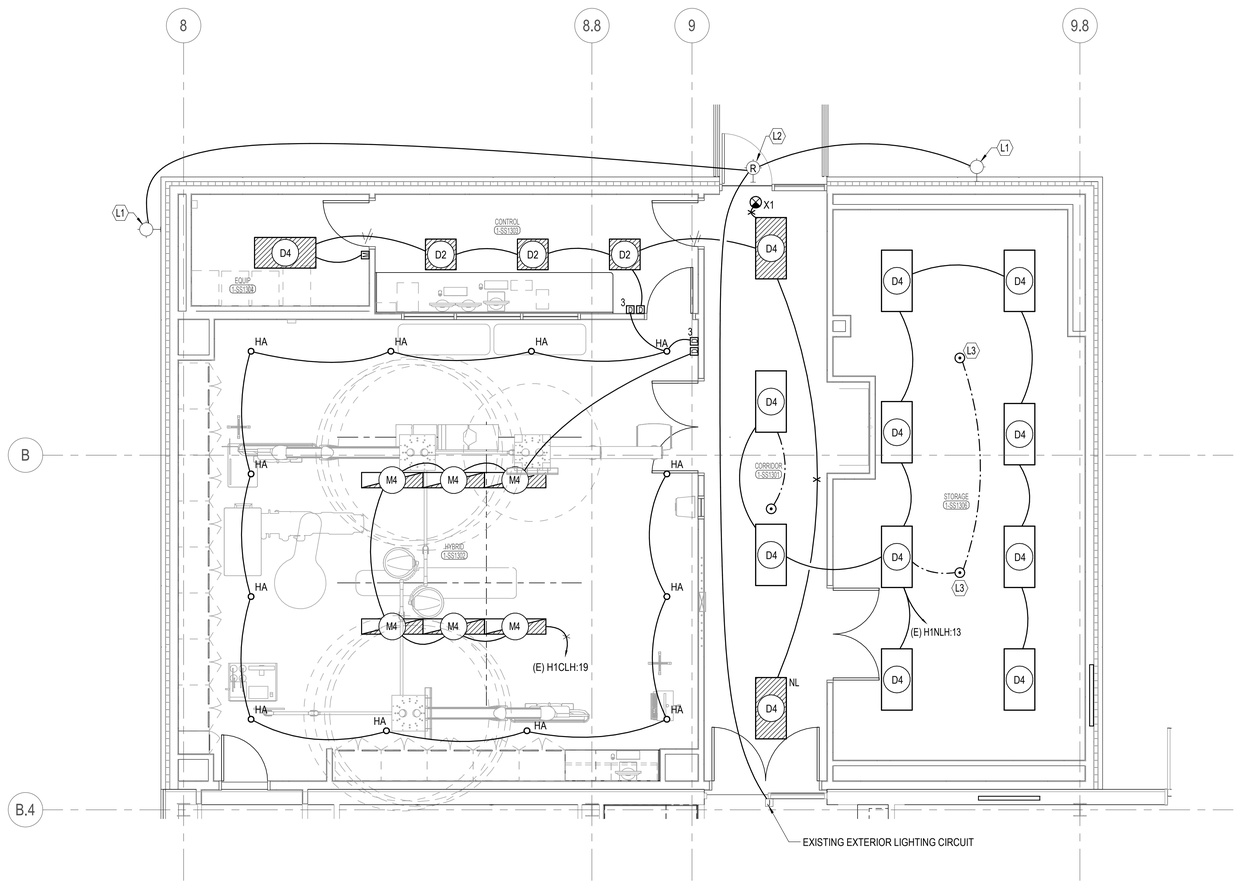

N

1 ENLARGED LIGHTING PLAN - HYBRID OR ADDITION
1/4" = 1'-0"

0' 2' 4' 8'

STATE OF MISSOURI
DARIN DOUGLAS CROWDER
NUMBER PE-2004017140
PROFESSIONAL ENGINEER

ACI BOLAND ARCHITECTS
1710 Wyandotte
Kansas City, MO 64108
T: 816.763.9600

ACI/Boland, Inc.
Kansas City | St. Louis
Licensee's Certificate of Authority Number:

STRUCTURAL, MECHANICAL, ELECTRICAL, & PLUMBING CONSULTANT

PEC
Professional Engineering Consultants, P.A.
623 Massachusetts Street, Suite 200
Lawrence, KS 66044
State Certificate of Authority: #000465F
Phone Number: 785.842.6464

LEES SUMMIT MEDICAL CENTER

HYBRID OR ADDITION
2100 SE Blue Pkwy, Lee's Summit, MO
64063

Date	3/23/20
Job Number	3-19058
Drawn By	MJU
Checked By	RWL

Revision

Number	Date	Description

E5.1

© 2020 ACI/BOLAND, Inc

ENLARGED LIGHTING PLAN - HYBRID O.R. ADDITION

BIM 360://190711-000 - Lee's Summit Med Cntr Hybrid OR Addn/190711-000-MASTER ELEC-R19.rvt

3/23/2020 10:39:42 AM

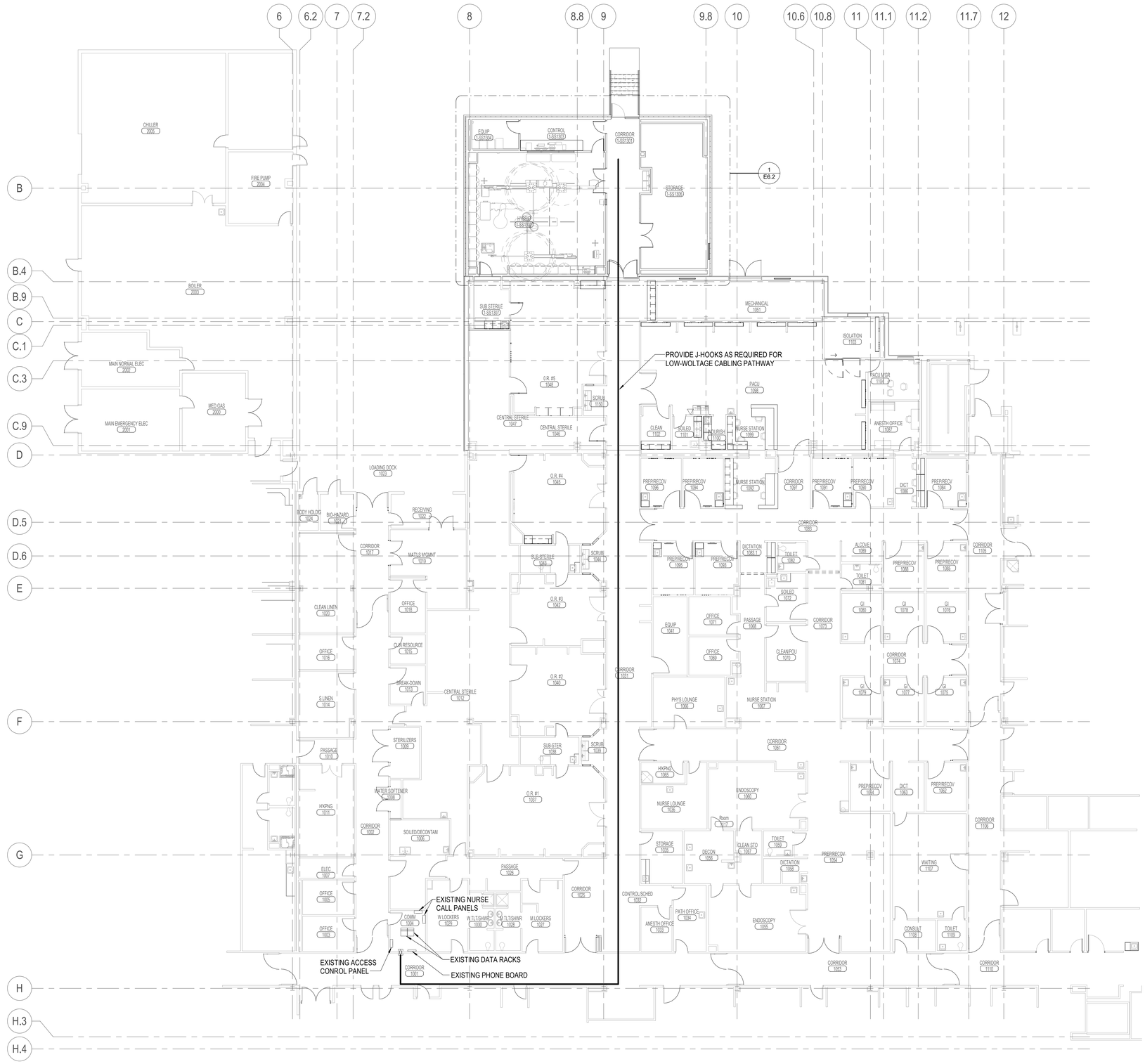

1 SYSTEMS PLAN - 1ST FLOOR OVERALL
3/32" = 1'-0"

0' 4' 8' 16'

SYSTEMS PLAN NOTES:

1. ALL PENETRATIONS IN THE RATED WALLS AND CEILINGS SHALL BE SEALED WITH A MATERIAL CAPABLE OF PREVENTING THE PASSAGE OF FLAMES AND HOT GASSES. THE SEALANT SHALL HAVE A T-RATING OF ONE HOUR.
2. ALL PIPING, CONDUIT, AND OUTLET BOXES (ELECTRIC, TELEPHONE, COMPUTER, ETC.) IN THE RATED WALLS OR CEILING SHALL BE CONSTRUCTED OF NON-COMBUSTIBLE MATERIAL.
3. OUTLET BOXES (ELECTRIC, TELEPHONE, COMPUTER, ETC.) SHALL BE LIMITED TO TWO OUTLET BOXES PER STUD SPACE. OUTLET BOXES ON OPPOSITE SIDES OF THE RATED WALLS SHALL BE SEPARATED BY A HORIZONTAL DISTANCE OF 24 INCHES.
4. WHERE THE SAME DEVICE IS SHOWN IN THE SAME LOCATION ON BOTH THE POWER AND SYSTEMS PLAN, ONLY ONE DEVICE IS REQUIRED. PROVIDE BOTH POWER AND SYSTEMS WIRING AS SHOWN.
5. THE FIRE ALARM SYSTEM SHOWN HAS BEEN DESIGNED PER THE REQUIREMENTS OF NFPA 72. DEVICES SHOWN INDICATE THE DESIGN INTENT AND SHALL BE THE MINIMUM PROVIDED. SYSTEM SUPPLIER SHALL PROVIDE ANY ADDITIONAL CODE REQUIRED DEVICES OR DEVICES REQUIRED BY THE AUTHORITY HAVING JURISDICTION.
6. PROVIDE DEDICATED J-HOOK PATHWAY FOR TELECOMMUNICATIONS CABLING AS REQUIRED. PROVIDE ADDITIONAL J-HOOKS AS REQUIRED FOR LOW-VOLTAGE CABLING AS REQUIRED.

STATE OF MISSOURI
DARIN DOUGLAS GRONDER
NUMBER PE-2004017162
PROFESSIONAL ENGINEER

ACI BOLAND ARCHITECTS
1710 Wyandotte
Kansas City, MO 64108
T: 816.763.9600

ACI/Boland, Inc.
Kansas City | St. Louis
Licensee's Certificate of Authority Number:

STRUCTURAL, MECHANICAL, ELECTRICAL, & PLUMBING CONSULTANT

PEC
Professional Engineering Consultants, P.A.
623 Massachusetts Street, Suite 200
Lawrence, KS 66044
State Certificate of Authority: #000465F
Phone Number: 785.842.6464

LEES SUMMIT MEDICAL CENTER

HYBRID OR ADDITION
2100 SE Blue Pkwy, Lee's Summit, MO
64063

Date	3/23/20
Job Number	3-19058
Drawn By	Author
Checked By	Checker

Revision

Number	Date	Description

E6.1

© 2020 ACI/BOLAND, Inc

SYSTEMS PLAN - 1ST FLOOR OVERALL

BIM 360://190711-000 - Lee's Summit Med Cntr Hybrid OR Addn/190711-000-MASTER ELEC-R19.rvt

3/23/2020 10:39:43 AM

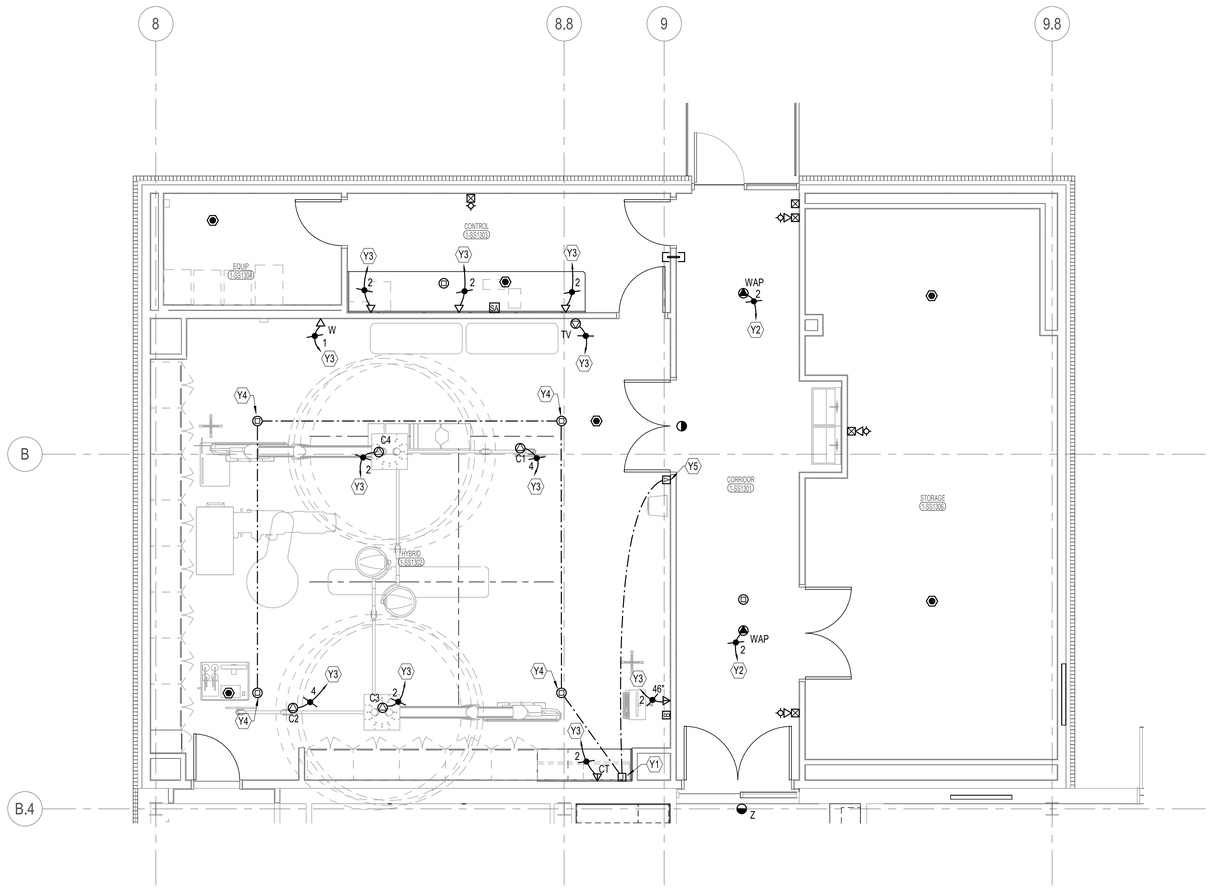

N

1 ENLARGED SYSTEMS PLAN - HYBRID OR ADDITION
1/4" = 1'-0"

0' 4' 8' 16'

SYSTEMS PLAN NOTES:

1. ALL PENETRATIONS IN THE RATED WALLS AND CEILINGS SHALL BE SEALED WITH A MATERIAL CAPABLE OF PREVENTING THE PASSAGE OF FLAMES AND HOT GASSES. THE SEALANT SHALL HAVE A T-RATING OF ONE HOUR.
2. ALL PIPING, CONDUIT, AND OUTLET BOXES (ELECTRIC, TELEPHONE, COMPUTER, ETC.) IN THE RATED WALLS OR CEILING SHALL BE CONSTRUCTED OF NON-COMBUSTIBLE MATERIAL.
3. OUTLET BOXES (ELECTRIC, TELEPHONE, COMPUTER, ETC.) SHALL BE LIMITED TO TWO OUTLET BOXES PER STUD SPACE. OUTLET BOXES ON OPPOSITE SIDES OF THE RATED WALLS SHALL BE SEPARATED BY A HORIZONTAL DISTANCE OF 24 INCHES.
4. WHERE THE SAME DEVICE IS SHOWN IN THE SAME LOCATION ON BOTH THE POWER AND SYSTEMS PLAN, ONLY ONE DEVICE IS REQUIRED. PROVIDE BOTH POWER AND SYSTEMS WIRING AS SHOWN.
5. THE FIRE ALARM SYSTEM SHOWN HAS BEEN DESIGNED PER THE REQUIREMENTS OF NFPA 72. DEVICES SHOWN INDICATE THE DESIGN INTENT AND SHALL BE THE MINIMUM PROVIDED. SYSTEM SUPPLIER SHALL PROVIDE ANY ADDITIONAL CODE REQUIRED DEVICES OR DEVICES REQUIRED BY THE AUTHORITY HAVING JURISDICTION.
6. PROVIDE DEDICATED J-HOOK PATHWAY FOR TELECOMMUNICATIONS CABLING AS REQUIRED. PROVIDE ADDITIONAL J-HOOKS AS REQUIRED FOR LOW-VOLTAGE CABLING AS REQUIRED.

(#) KEYED NOTES:

Y1 TERMINATION LOCATION FOR SOUND SYSTEM SPEAKER AND VOLUME CONTROLLER TO AMPLIFIER. PROVIDE BLUE FREESPACE DXA 2120 DIGITAL MIXER/AMPLIFIER, OR EQUAL. CONFIGURE AMPLIFIER TO STEREO SELECT MODE. CONNECT VOLUME CONTROL AND SPEAKERS PER MANUFACTURER'S DIRECTION.

Y2 ROUTE TWO (2) YELLOW CAT 6A CABLES TO COMM 1004, SEE DRAWING E6.1 FOR LOCATION. COIL A MINIMUM OF 30 FEET OF CABLE EACH WITH A BLACK JACK.

Y3 ROUTE A BLACK CAT 6 CABLE (QUANTITY AS INDICATED) TO COMM 1004, SEE DRAWING E6.1 FOR LOCATION. JACK SHALL BE BLACK.

Y4 PROVIDE BOSE FREESPACE DS/100F FLUSH MOUNTED WHITE CEILING SPEAKER (PRODUCT CODE 040805) WITH DS 40F/DS100F ROUGH-IN PAN (PRODUCT CODE 041993), OR EQUAL. UTILIZE 2 #18 JACKETED SPEAKER CABLES IN 1/2" C., BELDEN #8461, OR EQUAL, TO AMPLIFIER.

Y5 PROVIDE BLUE FREESPACE VOLUME CONTROL (PRODUCT CODE 041966), OR EQUAL. UTILIZE 2 #22 TWISTED PAIR DATA GRADE CABLE IN 1/2" C. TO AMPLIFIER.

STATE OF MISSOURI
DARIN DOUGLAS GRONDER
NUMBER PE-2004017162
PROFESSIONAL ENGINEER

ACI BOLAND ARCHITECTS
1710 Wyandotte
Kansas City, MO 64108
T: 816.763.9600

ACI/Boland, Inc.
Kansas City | St. Louis
Licensee's Certificate of Authority Number:

STRUCTURAL, MECHANICAL, ELECTRICAL, & PLUMBING CONSULTANT

PEC
Professional Engineering Consultants, P.A.
623 Massachusetts Street, Suite 200
Lawrence, KS 66044
State Certificate of Authority: #000465F
Phone Number: 785.842.6464

LEES SUMMIT MEDICAL CENTER

HYBRID OR ADDITION
2100 SE Blue Pkwy, Lee's Summit, MO
64063

Date	3/23/20
Job Number	3-19058
Drawn By	MJU
Checked By	RWL

Revision

Number	Date	Description

E6.2

© 2020 ACI/BOLAND, Inc

ENLARGED SYSTEMS PLAN - HYBRID O.R. ADDITION

BIM 360://190711-000 - Lee's Summit Med Cntr Hybrid OR Addn/190711-000-MASTER ELEC-R19.rvt

3/25/2020 4:19:42 PM

SPECIALTY EQUIPMENT SCHEDULE

TYPE MARK	DESCRIPTION	RESPONSIBILITY	COMMENTS
E0945	WORKSTATION, MOBILE	OFOI	POWER AS REQUIRED.
K1910	STAINLESS STEEL TABLE	OFOI	
M0013	INFECTIOUS WASTE BASKET	OFOI	
M0630	ANESTHESIA APPARATUS, 3 GAS	OFOI	
M1801	COMPUTER	OFOI	POWER AS REQUIRED.
M3110	BLANKET WARMER	OFOI	POWER AS REQUIRED.
M4255	IV STAND	OFOI	
M8880	ANESTHESIA CART	OFOI	
M8910	SURGICAL CASE CART	OFOI	
M9110	SURGICAL TABLE	OFOI	POWER AS REQUIRED.
U1000	IMAGE 40E CABINET	VFVI	RE: VENDOR DRAWINGS
U1001	PERIPHERAL 40E CABINET	VFVI	RE: VENDOR DRAWINGS
U1002	CERTERAY IX GENERATOR CABINET	VFVI	RE: VENDOR DRAWINGS
U1003	MAINS 40E CABINET	VFVI	RE: VENDOR DRAWINGS
U1004	REMOTE ALARM SYSTEM PANEL	VFCI	RE: VENDOR DRAWINGS
U1005	INTRASIGHT WORKSTATION	VFVI	RE: VENDOR DRAWINGS
U1006	CONTROL ROOM CONNECTION BOX	VFVI	RE: VENDOR DRAWINGS
U1007	REMOTE INJECTOR PANEL	VFVI	RE: VENDOR DRAWINGS
U1008	INJECTOR CONSOLE	VFVI	RE: VENDOR DRAWINGS
U1009	C-ARC STAND	VFVI	RE: VENDOR DRAWINGS
U1010	ANGIO DIAGNOST 7 W/ TILT, PIVOT, AND CRADLE	VFVI	RE: VENDOR DRAWINGS
U1011	SWITCH BOX	VFCI	RE: VENDOR DRAWINGS
U1012	AUXILIARY BOX	VFVI	RE: VENDOR DRAWINGS
U1013	LONGITUDINAL STATIONARY RAIL	VFVI	RE: RCP & VENDOR DRAWINGS
U1014	LONGITUDINAL DRIVE BELT	VFVI	RE: RCP & VENDOR DRAWINGS
U1015	CEILING MOUNTED OR LIGHTS/MONITOR BOOM	VFVI	RE: RCP & VENDOR DRAWINGS
U1016	CEILING MOUNTED OR LIGHTS/MONITOR BOOM	VFVI	RE: RCP & VENDOR DRAWINGS
U1017	CEILING MOUNTED OR LIGHTS/MONITOR BOOM	VFVI	RE: RCP & VENDOR DRAWINGS

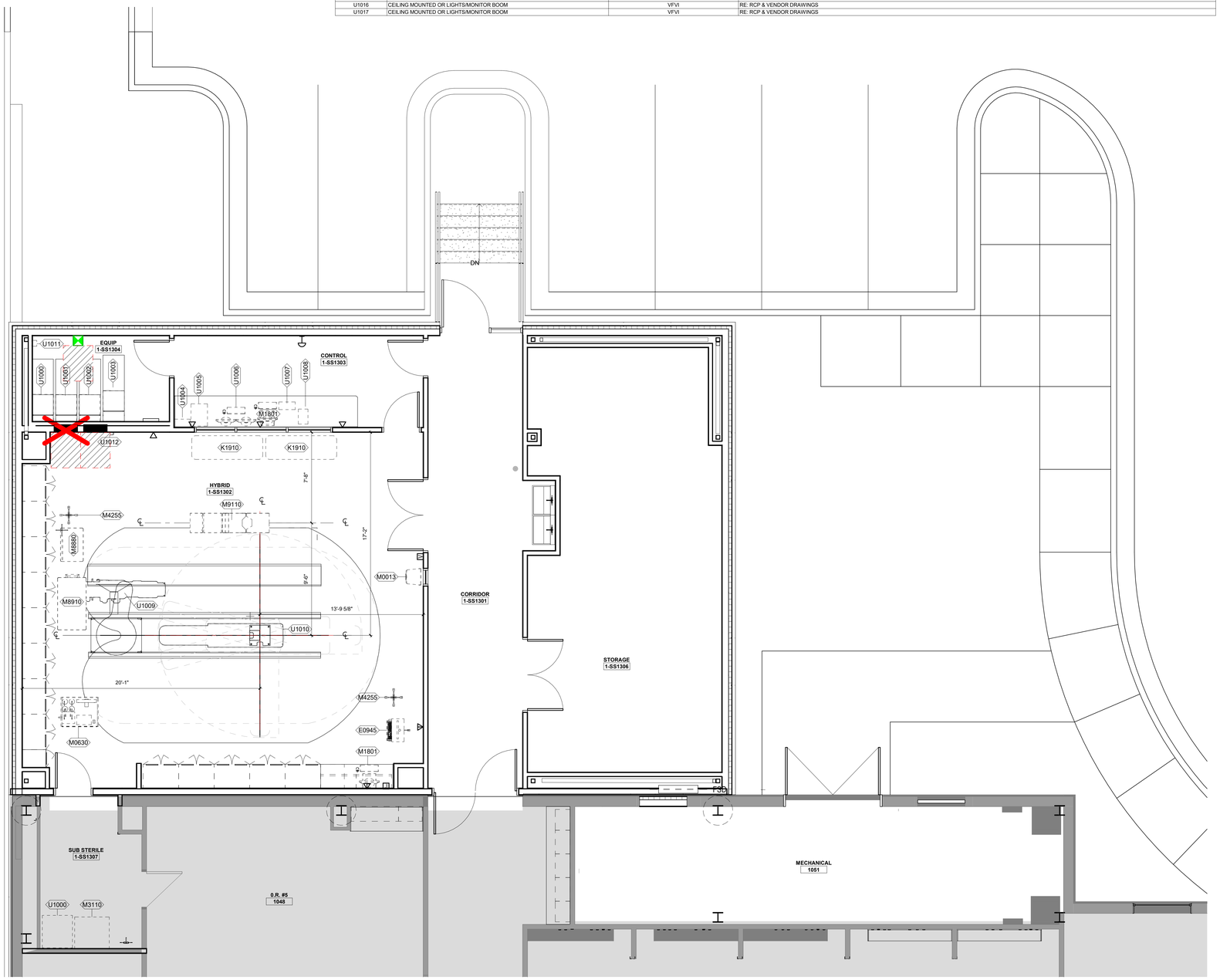

A1 FIRST FLOOR EQUIPMENT PLAN
1/4" = 1'-0"

NORTH

C:\Users\clauer\Documents\3-19058_LSMC Hybrid OR_Arch_clauerVTDN7.rvt

STATE OF MISSOURI
Victor L. Mosby
Number
A-6471
REGISTERED ARCHITECT

3-23-2020

Victor L. Mosby Architect
License - Missouri #A-6471

ACI BOLAND ARCHITECTS
1710 Wyandotte
Kansas City, MO 64108
T: 816.763.9600

ACI/Boland, Inc.
Kansas City | St. Louis
Licensee's Certificate of Authority Number:

STRUCTURAL, MECHANICAL, ELECTRICAL, & PLUMBING CONSULTANT

Professional Engineering Consultants, P.A.

623 Massachusetts Street, Suite 200
Lawrence, KS 66044

Licensee's Certificate of Authority Number:

Phone Number: 785.842.6464

Lee's Summit Medical Center

Hybrid OR Addition
2100 SE Blue Parkway
Lee's Summit, MO 64063

Date	3-23-2020
Job Number	3-19058
Drawn By	BR
Checked By	KC

Revision

Number	Date	Description

F1.1

© 2020 ACI/BOLAND, Inc

EQUIPMENT PLAN

3/23/2020 10:48:44 AM

FIRE PROTECTION NOTES

1. PIPING TO BE BLACK IRON WITH SCREWED MALLEABLE IRON FITTINGS OR MECHANICAL GROOVE FITTINGS. SEE SPECIFICATIONS FOR DETAILS AND APPLICATIONS.
2. PIPE HANGERS TO BE U.L. LISTED AND MOUNTED IN ACCORDANCE WITH NFPA-13.
3. DO NOT OBSTRUCT SPRINKLERS WITH OTHER UTILITIES.
4. REFER SPECIFICATIONS FOR SPRINKLER HEAD TYPES AND APPLICATIONS. ALL SPRINKLER HEADS TO BE QUICK-RESPONSE TYPE. ALL SPRINKLER HEADS SHALL BE LOCATED IN EXACT CENTER OF CEILING TILES.
5. FIRE SPRINKLER DESIGN IS THE RESPONSIBILITY OF THE FIRE SPRINKLER CONTRACTOR. FINAL DESIGN SHALL BE SEALED BY A REGISTERED LICENSED ENGINEER IN THE STATE OF KANSAS. FIRE MARSHALL APPROVED SHOP DRAWINGS SHALL BE SUBMITTED TO THE DESIGN ENGINEER FOR APPROVAL.
6. COORDINATE PIPE ROUTING AND HEAD LOCATIONS WITH OTHER TRADES. PIPING AND HEADS NOT COORDINATED SHALL BE MOVED AT THE CONTRACTOR'S EXPENSE TO ACCOMPLISH CEILING HEIGHTS AS CALLED OUT ON THE ARCHITECT'S DRAWINGS.
7. COORDINATE CLOSELY WITH ALL OTHER TRADES PRIOR TO CONSTRUCTION AND PROVIDE BIM MODEL TO CONSTRUCTION MANAGER FOR COORDINATION AMONG DISCIPLINES IF APPLICABLE.
8. FIRE PROTECTION ENGINEER OF RECORD SHALL DETERMINE HAZARD CLASSIFICATIONS.

FIRE PROTECTION GENERAL NOTES:

1. 1. THIS IS A LIFE SAFETY BUILDING WHICH MEANS IT SHALL REMAIN REASONABLY OPERATIONAL IN THE CASE OF A SEISMIC EVENT. THEREFORE ALL STATIONARY EQUIPMENT ON THE FLOOR OR A MEZZANINE AND ALL CONCRETE PADS SHALL BE FIXED RIGIDLY TO THE STRUCTURE. ALL ROTATING OR RECIPROCATING OR VIBRATING EQUIPMENT SHALL BE INSTALLED WITH EARTHQUAKE SNUBBERS TO LIMIT MOVEMENT. ALL HANGING EQUIPMENT, PIPING, AND DUCTWORK SHALL BE BRACED TO THE STRUCTURE. REFER TO SPECIFICATION SECTION 21 0548, 22 0548 AND 23 0548.
2. CONTRACTOR SHALL DESIGN FIRE SPRINKLER AND STANDPIPE SYSTEM(S), INCLUDING COMPREHENSIVE ENGINEERING ANALYSIS BY A QUALIFIED PROFESSIONAL ENGINEER, USING PERFORMANCE REQUIREMENTS AND DESIGN CRITERIA INDICATED.
3. SPRINKLER SYSTEM DESIGN SHALL BE APPROVED BY AUTHORITIES HAVING JURISDICTION.
4. ORIGINAL FIRE SPRINKLER SHOP DRAWINGS ARE AVAILABLE UPON REQUEST.
5. VERIFY ALL EXISTING CONDITIONS PRIOR TO BEGINNING WORK. BRING ANY DISCREPANCIES FROM THE DRAWINGS AND NOTES TO THE ARCHITECT IMMEDIATELY. MINOR CHANGES IN THE SCOPE OF THE DEMOLITION WORK SHALL NOT JUSTIFY AN ADDITIONAL COST.
6. REMOVAL OF EXISTING HEADS AND EQUIPMENT WILL REQUIRE ISOLATING THE PIPING RISERS OR MAINS VIA SHUT-OFF VALVES. INSTALL NEW ISOLATION VALVES WHERE REQUIRED FOR COMPLETION OF WORK.
7. REMOVAL OF EXISTING SPRINKLERS HEADS AND PIPING WILL REQUIRE CAPPING AND SEALING EXISTING MAINS OR BRANCHES AS NECESSARY AND REQUIRED TO ALLOW THE REMAINING SYSTEMS TO FULLY OPERATE WITHOUT DEGRADATION.
8. CONTRACTOR SHALL PROVIDE PROTECTIVE PLASTIC DROP CLOTHS TO PROTECT THE EXISTING OCCUPIED AREAS AND EQUIPMENT FROM DUST AND DEBRIS DURING THE CONSTRUCTION WORK, AND SHALL CLEAN THE AREAS OF ALL CONSTRUCTION DIRT DAILY, AND UPON COMPLETION OF THE WORK.
9. ALL DRAINED PIPING RISERS AND MAINS SHALL BE REFILLED WITH PROPER FLUID AND PROPERLY VENTED BY THIS CONTRACTOR, ONCE NEW WORK HAS BEEN INSTALLED.
10. COORDINATE WITH GENERAL CONTRACTOR THE REMOVAL AND REPLACEMENT OF ALL EXISTING CEILINGS, WALLS, ETC. AS REQUIRED FOR DEMOLITION WORK.
11. EXISTING PIPING, ETC., NOT TO BE UTILIZED IN THE COMPLETED BUILDING SHALL BE DISCONTINUED OR REMOVED AS REQUIRED. ALL ENDS OF DISCONTINUED PIPING SHALL BE CAPPED IN THE NEAREST WALL, CEILING OR FLOOR SO THAT THEY ARE COMPLETELY CONCEALED. OPENINGS LEFT IN WALLS, CEILINGS, ETC., WHERE EQUIPMENT AND PIPE, ETC., ARE REMOVED AND NOT REPLACED, SHALL BE PATCHED NEATLY WITH SIMILAR MATERIAL TO ADJACENT CONSTRUCTION. REFER TO DRAWINGS DELINEATING NEW WORK FOR ADDITIONAL INFORMATION REGARDING SYSTEMS OR PORTIONS OF SYSTEMS WHERE USE IS TO BE DISCONTINUED.
12. ALL CUTTING AND CHANNELING OF EXISTING BUILDING SHALL BE ACCOMPLISHED IN A NEAT AND WORKMANLIKE MANNER WITHOUT REMOVAL OF EXCESS MATERIALS. THIS CONTRACTOR SHALL PATCH AND REPLACE WITH MATERIAL SIMILAR TO ADJACENT CONSTRUCTION.
13. WHERE EXISTING PIPING AND EQUIPMENT, ETC., THAT ARE TO BE UTILIZED IN THE COMPLETED PROGRAM CONFLICT WITH NEW CONSTRUCTION AND THE REQUIRED DEMOLITION, THEY SHALL BE RELOCATED AND RECONNECTED TO MAINTAIN THE DESIRED SERVICE.
14. PORTIONS OF EXISTING SYSTEMS MAY BE SHOWN FOR CLARITY EVEN THOUGH IT MAY NOT BE NECESSARY TO MODIFY OR REVISE THEM. ALL EXISTING SYSTEMS ARE SHOWN BASED ON ORIGINAL OR REMODEL BUILDING DRAWINGS. CONTRACTOR TO VERIFY ALL EXISTING CONDITIONS.
15. ALL WORK MUST BE COORDINATED AND SCHEDULED WITH THE OWNER AND OCCUPANTS OF THIS BUILDING SO AS TO PROVIDE THE LEAST AMOUNT OF DISRUPTION OF BUILDING ACTIVITIES AS POSSIBLE. MAINTAIN CONDITIONED SPACE FOR ALL OWNER OCCUPIED AREAS DURING CONSTRUCTION.
16. COORDINATE ALL WORK WITH OTHER TRADES PRIOR TO INSTALLATION.
17. COORDINATE ROUTING OF PIPING AND SPRINKLER HEADS WITH DUCTWORK, LIGHTS, ARCHITECTURAL CEILING AND STRUCTURAL ELEMENTS. PIPING SHALL RISE AND DROP, JOG OR OFFSET AS REQUIRED TO AVOID CONFLICTS. DUCTWORK SHALL TAKE PRECEDENCE OVER ALL PIPING, EXCEPT WHERE GRADE MUST BE MAINTAINED FOR DRAINAGE. REWORK OF INSTALLED WORK TO RESOLVE CONFLICTS RISING FROM LACK OF COORDINATION SHALL NOT JUSTIFY AN INCREASE IN THE CONTRACT AMOUNT.
18. ALL PENETRATIONS THROUGH FIRE RATED ASSEMBLIES SHALL BE FIRE STOPPED BY THE TRADE MAKING THE PENETRATION. REFER TO ARCHITECTURAL DRAWINGS AND SPECIFICATIONS FOR REQUIREMENTS.
19. DO NOT ROUTE PIPING OVER ELECTRICAL PANELS OR EQUIPMENT. PIPING SHALL NOT BE ROUTED THROUGH ELECTRICAL ROOMS, TELECOM ROOMS OR ELEVATOR EQUIPMENT ROOMS UNLESS SPECIFICALLY SERVING THAT ROOM. COORDINATE WITH E.C.
20. COORDINATE SIZE AND LOCATION OF ACCESS DOORS IN CONSTRUCTION REQUIRED FOR ACCESS TO MECHANICAL EQUIPMENT WITH G.C.
21. ALL WORK IS TO CONFORM WITH APPLICABLE CODES AND STANDARDS.
22. CONTRACTOR TO INSTALL TEMPORARY FILTERS OVER ALL RETURN AND EXHAUST GRILLES IN WORK AREA DURING CONSTRUCTION.
23. THESE DRAWINGS ARE ACCOMPANIED BY SPECIFICATIONS. REFER TO SPECIFICATIONS FOR FURTHER INFORMATION.
24. EQUIPMENT THAT REQUIRES MAINTENANCE SHALL BE LOCATED A MINIMUM OF 10'-0" FROM THE BUILDING ROOF EDGE WHERE REQUIRED BY CODE.

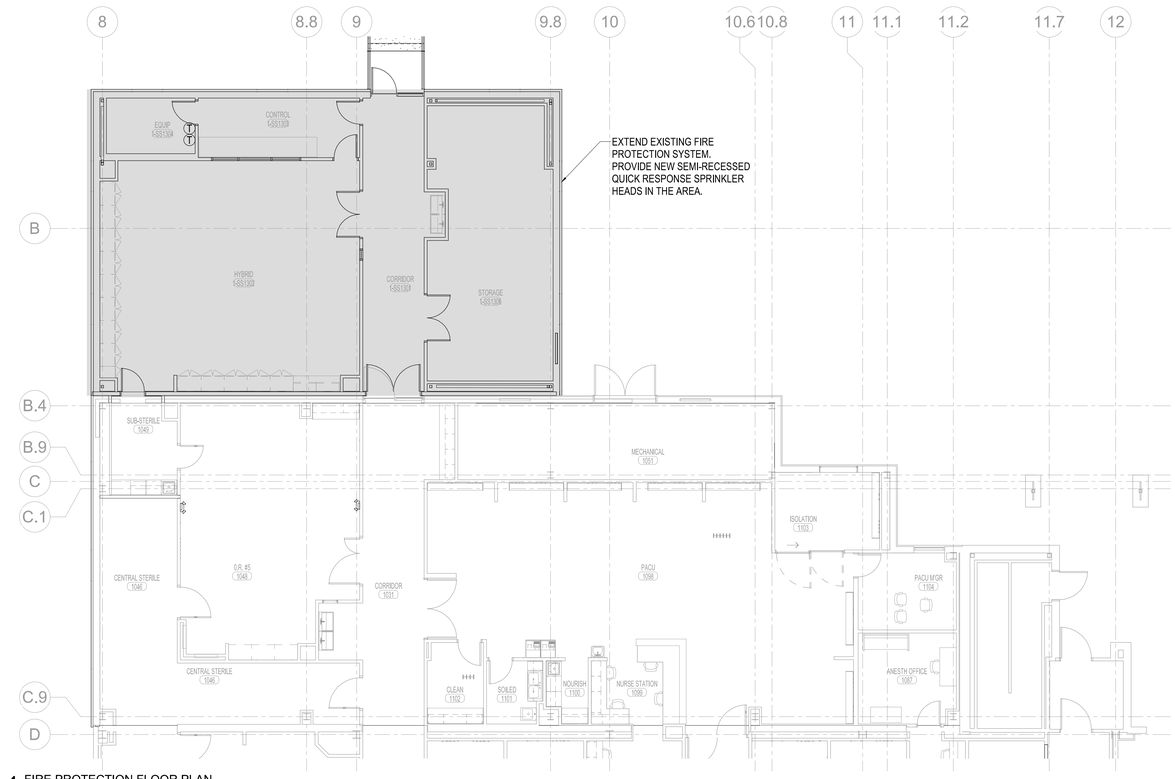

1 FIRE PROTECTION FLOOR PLAN
1/8" = 1'-0"

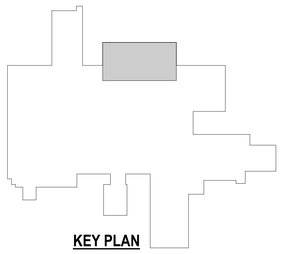

KEY PLAN

STATE OF MISSOURI
BRANDON W. CLASSEN
NUMBER PE-2019000019
2020-03-23
PROFESSIONAL ENGINEER

ACI BOLAND ARCHITECTS
1710 Wyandotte
Kansas City, MO 64108
T: 816.763.9600

ACI/Boland, Inc.
Kansas City | St. Louis
Licensee's Certificate of Authority Number:

STRUCTURAL, MECHANICAL, ELECTRICAL, & PLUMBING CONSULTANT

PEC
Professional Engineering Consultants, P.A.
623 Massachusetts Street, Suite 200
Lawrence, KS 66044
State Certificate of Authority: #000465F
Phone Number: 785.842.6464

Lee's Summit Medical Center

Hybrid OR Addition
2100 SE Blue Parkway
Lee's Summit, MO 64063

Date	3-23-2020
Job Number	3-19058
Drawn By	DBB
Checked By	SPH

Revision

Number	Date	Description

FP1.10

© 2020 ACI/BOLAND, Inc

FIRE PROTECTION FLOOR PLAN

BIM 360://190711-000 - Lee's Summit Med Cntr Hybrid OR Addn/190711-000-MASTER MECH-R19.rvt