PHASE II ADDITION TO:

THE SUMMIT

3381 NW CHIPMAN ROAD

LEE'S SUMMIT, MO 64081

STATE OF MISSOURI
NUMBER
A-7731
REGISTERED ARCHITECT

2/05/2020

PROJECT #: 15-678
ISSUE DATE: 2/05/2020

CONSTRUCTION DOCUMENT DRAWINGS

mantel teter
consulting | architecture | developing
929 Walnut Street, Suite 5104 | Kansas City, Missouri 64106
toll-free: 877.215.5600 | www.manteltetet.com

A.L. HUBER
general contractor

CONSULTANTS

Johnston Burkholder Associates	930 Central - Kansas City, MO 64105	816-421-4200
Metro Air	10035 Lackman Road - Lenexa, KS 66219	913-888-3991
Eldecon, Inc	6200-1 NW Kelly Drive - Kansas City, MO 64152	816-587-3322
Central Plumbing, Heating & A/C Inc.	13707 Wyandotte, Kansas City, MO 64145	816-942-6355
Engineering Solutions	50 SE 30th Street - Lee's Summit, MO 64082	816-623-9888
Stark Raving Solutions	8731 Melrose Drive - Lenexa, KS 66214	913-383-0243

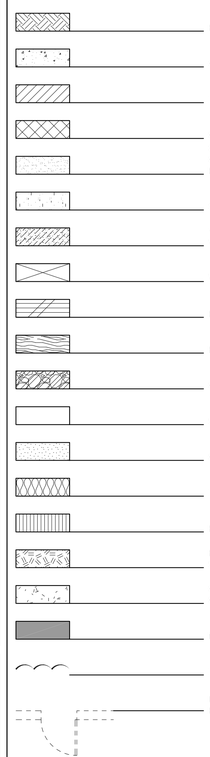

FINISH NOTES

1. INTENT OF THE CONTRACT DOCUMENTS ARE DEFINED FOR INTERIOR FINISHES AS A COMPLETED AND FINISHED AESTHETIC APPEARANCE CONSISTENT WITH THE DETAILS, MATERIALS AND PERFORMANCE DESCRIPTION THAT THEY INFER.
2. PATCH ALL WALLS, FLOORS, CEILINGS, ETC., AS REQUIRED TO RECEIVE SCHEDULED FINISHES AND/OR FOR CONSISTENT UNIFORM APPEARANCE AS ESTABLISHED FROM ADJACENT/OPPOSITE SURFACE TREATMENTS.
3. ALL MATERIALS ARE NOT ALL NOTED BY WORDS. IT IS INTENDED THAT THEY ARE UNDERSTOOD BY THE MATERIAL SYMBOL DRAWN.
4. WHERE A CONDITION IS NOTED "TYPICAL" (TYP) IT IS UNDERSTOOD THAT ALL SIMILAR CONDITIONS ARE TO BE CONSTRUCTED OF THE SAME MATERIALS AND/OR DIMENSION.
5. ALL DIMENSIONS ARE TO THE FACE OF MASONRY, STUDS AND FURRING OR TO THE CENTER LINE OF STRUCTURAL STEEL. SOFFIT/CEILING ELEVATIONS ARE FINISHED DIMENSIONS.
6. SLOPE 1" IN 48" RADIUS AROUND ALL FLOOR DRAINS.
7. ALL EXTERIOR STEEL SHALL BE GALVANIZED.
8. ALL EXTERIOR LINTELS, LOUVERS, ETC., SHALL BE PRE-FINISHED OR PAINTED TO MATCH THE FINISH COLOR OF THE MATERIAL THEY PENETRATE. SUBMIT SAMPLE FOR ARCHITECT'S APPROVAL.
9. REINFORCE ALL STEEL BAR JOISTS AT PANEL POINTS WHERE SPECIAL LOADING IS APPLIED, SUCH AS FOLDING PARTITION FRAMING.
10. ALL STUD PARTITIONS ARE AT 16" O.C. BELOW CEILINGS. ABOVE CEILINGS, STUDS MAY BE INSTALLED AT 4'-0" O.C., AND SECURED TO BOTTOM OF STEEL JOIST/ STRUCTURE ABOVE EXCEPT AS NOTED.
11. ALL EXPOSED PIPES, DUCTS, CONDUIT IN FINISHED SPACES SHALL BE ENCLOSED WITH GYPSUM BOARD AND FURRING OR BLOCK CONSTRUCTION AS CONSISTENT WITH ADJACENT CONSTRUCTION INCLUDING THOSE NOT SHOWN ON THE DRAWINGS.
12. FURNISH AND INSTALL SOLID FIRE-RETARDANT TREATED WOOD BLOCKING IN ALL INTERIOR STUD PARTITIONS WHERE STRUCTURAL SUPPORTS ARE REQUIRED FOR VANITIES, SHELVING, HANDRAILS, GRAB BARS, DOOR WALL STOPS, ETC.
13. ALL PLYWOOD BACKING PANELS SHALL BE FIRE-RETARDANT TREATED WOOD.
14. ALL INTERIOR FINISH MATERIALS SHALL MEET THE CLASS RATINGS REQUIRED BY TABLE 803.13 OF THE 2018 IBC AS REQUIRED FOR THE OCCUPANCY TYPE AND CONSTRUCTION TYPE SHOWN IN THE CODE SUMMARY ON DRAWINGS SHEET G0.30.
15. REFER TO SPECIFICATIONS FOR FINISH MATERIAL AND INSTALLATION REQUIREMENTS.
16. REFER TO SPECIFICATION SECTION "099900 FINISH SCHEDULE" FOR FINISH MATERIALS AND COLOR SELECTIONS.
17. REFER TO SPECIFICATION SECTION "099100 GENERAL PAINTING" FOR ALL PAINTING, STAINING AND VARNISHING. SUBMIT SAMPLES FOR ARCHITECT'S APPROVAL.
18. ALL INTERIOR WALL GRILLES SHALL BE PRE-FINISHED OR PAINTED TO MATCH SURROUNDING WALL COLOR. VERIFY WITH ARCHITECT PRIOR TO ORDERING.
19. PAINT ALL STEEL STAIR RISERS, RAILING AND OTHER EXPOSED STEEL STAIR MEMBERS.
20. CLOSETS, STOREROOMS, ETC. NOT NOTED IN SPECIFICATION SECTION "099900 FINISH SCHEDULE" SHALL BE FINISHED PER THE ROOMS THEY SERVE.
21. RUN ALL WALL FINISHES CONTINUOUS BEHIND ALL CHALK/TACK BOARDS, MIRRORS, SHELVING, ETC. WALLS BEHIND BASE AND WALL CABINETS MAY BE LEFT UNFINISHED, EXCEPT AS NOTED OTHERWISE.
22. ALL EXPOSED GYPSUM BOARD WALLS, COLUMNS, VERTICAL FACES OF SOFFITS SHALL HAVE A SMOOTH FINISHED SURFACE (RE: SPECIFICATION SECTION 09 2900). ALL BATHROOMS, CLOSETS, STOREROOMS, HORIZONTAL SOFFITS, CEILINGS OR SHELVES WILL BE FINISHED SMOOTH. CONTRACTOR SHALL SUBMIT SHOP DRAWING ELEVATIONS IDENTIFYING THE LOCATION AND TYPE OF ALL REQUIRED CONTROL AND EXPANSION JOINTS PRIOR TO CONSTRUCTION.
23. ALL RUBBER BASE SHALL BE 4" TIGHTLOCK WALL BASE UNLESS NOTED OTHERWISE.
24. PROVIDE SCHEDULED RUBBER WALL BASE AT CASEWORK TOE KICK LOCATIONS UNLESS NOTED OTHERWISE.
25. PROVIDE FLOOR TRANSITION STRIPS BETWEEN ALL FINISH FLOOR MATERIALS WHERE THEY ABUT DISSIMILAR FLOOR FINISHES. LOCATE TRANSITION STRIPS AT CENTERLINE UNDER DOORS. VERIFY COLOR WITH ARCHITECT.
26. PAINT ALL INTERIOR HOLLOW METAL DOOR, DOOR LIGHT AND WINDOW FRAMES. PAINTED SPLIT JAMBS WILL BE REQUIRED FOR THIS PROJECT. SUBMIT SAMPLES FOR ARCHITECT'S APPROVAL.
27. STAIN AND VARNISH ALL INTERIOR HARDWOOD DOORS, CABINETS, HANDRAILS, TRIM, ETC. UNLESS NOTED OTHERWISE.
28. COORDINATE SUSPENDED ACOUSTICAL GRID CEILINGS WITH ELECTRICAL CEILING LIGHT FIXTURE LAYOUT - SEE ELECTRICAL AND HVAC PLANS. ALL SUSPENDED ACOUSTICAL GRID CEILINGS SHALL BE CENTERED WITHIN CEILING PERIMETER UNLESS SHOWN OTHERWISE. MATCH SPRINKLER HEAD PLACEMENT WITH EXISTING BUILDING.
29. PROVIDE 6" UNFACED SOUND BATT INSULATION ABOVE ACOUSTICAL CEILING TILES IN RESTROOMS, TOILET ROOMS, OFFICES AND 2'-0" EACH SIDE OF WALLS BETWEEN CORRIDORS AND RESPECTIVE ADJACENT ROOMS.
30. WHERE ALL DISSIMILAR MATERIALS MEET, USE CAULKED JOINTS. USE METAL EDGES, CORNERS AND STOPS AS REQUIRED ON ALL GYPSUM BOARD UNITS.
31. INSTALL PORTABLE FIRE EXTINGUISHERS (WITH A GROSS WEIGHT NOT EXCEEDING 40 POUNDS) NO MORE THAN 4 FEET ABOVE THE FLOOR TO TOP OF EXTINGUISHER. INSTALL FIRE EXTINGUISHERS WITH A GROSS WEIGHT EXCEEDING 40 POUNDS NO MORE THAN 3.5 FEET ABOVE THE FLOOR TO TOP OF EXTINGUISHER. THE CLEARANCE BETWEEN THE FLOOR AND THE BOTTOM OF INSTALLED PORTABLE EXTINGUISHERS SHALL NOT BE LESS THAN 4 INCHES.

SITE NOTES

1. THE OWNER PROVIDED SURVEY INFORMATION IS ACCORDING TO THE BEST INFORMATION AVAILABLE TO THE ENGINEERS & ARCHITECT, THEREFORE THE ARCHITECT CANNOT GUARANTEE THE ACCURACY OF THE SURVEY. THE CONTRACTOR SHALL VERIFY ALL EXISTING GRADES, DIMENSIONS AND/OR UTILITY LINES AS REQUIRED AND REPORT ANY DISCREPANCY TO THE ARCHITECT BEFORE PROCEEDING WITH CONSTRUCTION FOR PROPER INTENT AND LOCATION.
2. ALL EXISTING UTILITIES MAY NOT BE SHOWN ON THE SURVEY. GENERAL CONTRACTOR SHALL CONTACT AND COORDINATE WITH ALL UTILITY COMPANIES TO FIELD VERIFY THE EXACT LOCATION OF ALL UNDERGROUND AND ABOVE GROUND UTILITY LINES WITH THE COMPANY OWNING THE RESPECTIVE LINES WHETHER SHOWN OR NOT ON THE DRAWINGS. IN ADDITION, GENERAL CONTRACTOR SHALL PROTECT ALL UTILITY LINES (ABOVE & BELOW GROUND) DURING THE ENTIRE CONSTRUCTION PERIOD. UTILITIES DAMAGED THROUGH THE NEGLIGENCE OF THE CONTRACTOR TO VERIFY THE LOCATION OF THE SAME SHALL BE REPAIRED OR REPLACED BY THE CONTRACTOR AT HIS EXPENSE.
3. THE TEST BORINGS AND GEOTECHNICAL REPORT WERE PREPARED FOR THIS BUILDING BY TERRACON CONSULTANTS, INC. (913-492-7777). ALL RECOMMENDATIONS IN GEOTECHNICAL REPORT SHALL BE MADE A PART OF THIS CONTRACT UNLESS NOTED OTHERWISE.
4. THE GENERAL CONTRACTOR SHALL HAVE TESTS PERFORMED FOR ALL SOIL CONDITIONS, CONCRETE AND STEEL PER THE REQUIREMENTS OF THE SPECIFICATIONS.
5. ANY EXISTING TREES TO REMAIN SHALL BE ADEQUATELY PROTECTED WITH FENCING AT LEAST 4' HIGH AND 4' FROM THE TREE. TREES WHICH ARE MARKED TO REMAIN AND ARE DAMAGED OR KILLED UP TO ONE YEAR AFTER COMPLETION OF CONSTRUCTION, DUE TO ROUGH GRADING OR SUPERFICIAL DAMAGE, SHALL BE REPLACED WITH A 4" DIAMETER TREE OF THE SAME SPECIES, OR APPROVED EQUAL BY THE OWNER, AT NO COST TO THE OWNER.
6. STRIP TOP SOIL TO DEPTH OF 6" AND STOCKPILE FOR REDISTRIBUTION AFTER ROUGH GRADING. STOCKPILE TOPSOIL IN SEPARATE LOCALE FROM UNDERLYING SOIL. REDISTRIBUTE TOPSOIL AT DEPTH OF 4" MINIMUM OVER ALL UNPAVED AREAS. IF ADDITIONAL TOPSOIL IS REQUIRED, THE GENERAL CONTRACTOR SHALL BE RESPONSIBLE TO PROVIDE ADDITIONAL MATERIAL.
7. SEE CIVIL DRAWINGS FOR GRADING AND DRAINAGE REQUIREMENTS. COORDINATE ALL ITEMS WITH MECHANICAL/ELECTRICAL SITE PLAN REQUIREMENTS. REPORT ALL DISCREPANCIES TO ARCHITECT BEFORE PROCEEDING WITH CONSTRUCTION FOR PROPER INTENT.
8. GRADING SHOWN WILL BE FIELD CHECKED BY THE CIVIL ENGINEER AND OWNER AFTER ROUGH GRADING IS COMPLETED. MINOR CHANGES AS FIELD CONDITIONS DICTATE MAY BE REQUIRED. CONTOUR AND SPOT ELEVATIONS ARE CONTROLS ONLY AND ALL GRADING IS TO BE SMOOTH, FLOWING AND CONTINUOUS FOR POSITIVE DRAINAGE AND VISUAL EFFECT.
9. EXCESS FILL REQUIRED TO OBTAIN CONTROL ELEVATIONS SHALL BE OF APPROVED COMPOSITION AND PLACED PER THE GEOTECHNICAL ENGINEER'S RECOMMENDATIONS.
10. COMPACT ALL AREAS TO MAXIMUM DENSITIES AT OPTIMUM SOIL MOISTURE CONTENT AS REQUIRED BY THE GEOTECHNICAL REPORT.
11. REFERENCE CIVIL DRAWINGS FOR CONCRETE SIDEWALK, CURB AND GUTTER DESIGN. ALL NEW CONCRETE SIDEWALKS, CURBS AND/OR GUTTERS SHALL BE INSTALLED AT AN EXISTING JOINT WITH EXPANSION JOINT MATERIAL AND SEALANT TO PROVIDE A SMOOTH TRANSITION BETWEEN NEW AND EXISTING CONSTRUCTION.
12. VERIFY FINISH CURB ELEVATIONS BEFORE INSTALLATION TO ASSURE POSITIVE DRAINAGE AND TO ALIGN WITH EXISTING.
13. VERIFY LOCATION OF ALL PADS FOR UTILITY EQUIPMENT WITH ARCHITECT, AND/OR MECHANICAL ENGINEER. SET ALL PADS ON COMPACTED SUBGRADE AND 4" AB-3 BASE.
14. ALL UNPAVED AREAS DISTURBED SHALL BE SEEDED, SODDED OR MULCHED ON REDISTRIBUTED TOPSOIL.
15. EXISTING ASPHALT AREAS DAMAGED BY CONSTRUCTION SHALL BE REPAIRED WITH 5" SOLID ASPHALT AT NO COST TO THE OWNER. PRIOR TO START OF CONSTRUCTION, GENERAL CONTRACTOR SHALL DOCUMENT DETERIORATED AREAS TO BE PREPARED PRIOR TO COMMENCEMENT OF CONSTRUCTION. ALL NEW ASPHALT AND PATCHED AREAS SHALL PROVIDE SMOOTH TRANSITION BETWEEN NEW AND EXISTING SURFACES WITHOUT DIPS, HUMPS OR BUMPS.
16. FURNISH AND INSTALL TERMITE CONTROL AS REQUIRED BY THE SPECIFICATIONS.

SITE DEMOLITION NOTES

1. THE GENERAL CONTRACTOR WILL REMOVE ANY AND ALL SIDEWALKS, CURBS, SHRUBBERY, TREES, FENCES, CONCRETE CURBS, ASPHALT AND ANY OTHER ITEMS NOT NOTED TO BE REMOVED BUT REQUIRED TO BE REMOVED TO INSTALL THE NEW CONSTRUCTION.
2. ALL POLES, LINES, METERS, PADS, ETC. TO BE REMOVED OR RELOCATED, SHALL BE MODIFIED BY THE UTILITY OWNING THE ITEM. GENERAL CONTRACTOR WILL BE RESPONSIBLE TO FILL ANY HOLES PER DIVISION 2 IF NOT COMPLETED BY UTILITY. COORDINATE WITH OWNING UTILITY COMPANY.
3. GENERAL CONTRACTOR SHALL CONTACT ALL UTILITY COMPANIES TO FIELD VERIFY EXCACT LOCATIONS OF UNDERGROUND AND ABOVE GROUND LINES AND COORDINATE WITH UTILITY COMPANY OWNING LINES THAT MAY NEED TO BE RELOCATED OR REROUTED.
4. GENERAL CONTRACTOR SHALL PROTECT ALL UTILTY LINES (ABOVE & BELOW GROUND) DURING THE ENTIRE CONSTRUCTION PERIOD. DAMAGED LINES WILL BE REPAIRED AND/OR REPLACED AT NO COST TO THE OWNER. THIS INCLUDES ALL UTILITY LINES SHOWN OR NOT SHOWN.
5. UTILITY LINES SHOWN ARE FROM OWNER SUPPLIED SURVEY AND ARCHITECT DOES NOT GUARANTEE THE ACCURACY OR LOCATION. GENERAL CONTRACTOR SHALL VERIFY THE LOCATION OF ALL UNDERGROUND AND ABOVE GROUND UTILITY LINES WITH THE COMPANY OWNING LINES WHETHER SHOWN OR NOT SHOWN.
6. GENERAL CONTRACTOR SHALL PROTECT, BRACE AND SHORE THE EXCAVATION AND ALL EXISTING STRUCTURES ADJACENT TO ANY AND ALL EXCAVATIONS. PRIOR TO CONSTRUCTION, THE GENERAL CONTRACTOR SHALL ESTABLISH THE DEPTH OF FOUNDATIONS FOR THE WALLS OF THE EXISTING STRUCTURES ADJACENT TO THE EXCAVATIONS. GENERAL CONTRACTOR SHALL SUBMIT TO THE ARCHITECT/ENGINEER A TEMPORARY BRACING METHOD TO BE IMPLEMENTED TO PROTECT THE SLOPE OF THE EXCAVATION AND ADJACENT EXISTING STRUCTURES DURING THE CONSTRUCTION OF THE BASEMENT AREAS FOR REVIEW PRIOR TO CONSTRUCTION. THE GENERAL CONTRACTOR SHALL BE RESPONSIBLE FOR THE DESIGN AND CONSTRUCTION OF SUCH METHODS OF PROTECTION OF EXISTING STRUCTURE.

DEMOLITION NOTES

1. THE DEMOLITION WORK REQUIRED IS NOT SPECIFICALLY SHOWN BUT ALL WORK REQUIRED TO COMPLETE THE PROJECT TO A LEVEL INFERRED BY THESE DRAWINGS SHALL BE THE RESPONSIBILITY OF THE GENERAL CONTRACTOR.
2. THE GENERAL CONTRACTOR IS RESPONSIBLE TO VISIT THE SITE AND EXAMINE THE SITE AND BUILDING TO VERIFY THE EXTENT/QUANTITY OF ALL DEMOLITION WORK INVOLVED TO ACHIEVE COMPLETED NEW CONSTRUCTION.
3. THE OWNER WILL REMOVE (72 HOURS AFTER NOTIFICATION OF WORK IN EACH AREA BY GENERAL CONTRACTOR) ANY ITEMS THEY WISH TO SALVAGE. CONTRACTOR WILL REMOVE FROM THE PROPERTY ALL OTHER ITEMS INCLUDING DOORS, FRAMES FIXTURES, HARDWARE, ETC. INCLUDING DEMOLISHED WALLS, FLOORING, CEILINGS, ETC. AS REQUIRED TO COMPLETE THE WORK.
4. THE GENERAL CONTRACTOR SHALL PROVIDE APPROPRIATE SAFETY PRECAUTIONS TO INSURE THE SAFETY OF WORKERS, EMPLOYEES AND THE PUBLIC. SEE SPECIFICATIONS ON DEMOLITION WORK INCLUDING SAFETY REQUIREMENTS. ALL NOTES APPLY TO THE ENTIRE PROJECT.
5. IN EXISTING WALLS THAT REMAIN WHICH REQUIRE NEW ELECTRICAL, MECHANICAL OR PLUMBING WORK, THE CONTRACTOR HAS THE OPTION TO REMOVE THE SURFACE OF ONE OR BOTH SIDES AS REQUIRED. NEW WALL FINISHES SHALL BE APPLIED TO MATCH ADJACENT FINISHES TO REMAIN.
6. THE CONTRACTOR HAS THE OPTION OF REMOVING MORE WALLS THAN INDICATED ON THESE DRAWINGS AND REBUILDING NEW WALLS TO THE SAME LOCATION AND MATERIALS AND FINISHES SPECIFIED. ANY ADDITIONAL SHORING REQUIRED SHALL BE CONSIDERED IN THIS OPTION.
7. WHERE INTERIOR LOAD BEARING WALLS ARE TO BE REMOVED, ADEQUATE BRACING SHALL BE IN PLACE PRIOR TO DEMOLITION AND IS TO REMAIN IN PLACE UNTIL NEW STRUCTURAL SUPPORT HAS BEEN INSTALLED TO ACCOMMODATE THESE LOADS.
8. REMOVE ALL ELECTRICAL, MECHANICAL (PHVAC) AND RELATED ITEMS AS REQUIRED TO INSTALL NEW WORK. ALL ABANDONED LINES SHALL BE REMOVED AS PART OF THIS WORK.
9. WHERE FASCIAS, GUTTERS, PARAPETS, ETC. ARE TO BE REMOVED, OR WHERE ROOF PENETRATIONS ARE TO BE MADE, THE CONTRACTOR SHALL PROTECT THE OPENING FROM WEATHER EXPOSURE. ANY DAMAGE CAUSED BY WEATHER EXPOSURE SHALL BE REPAIRED OR REPLACED AT THE CONTRACTOR'S EXPENSE.

GENERAL NOTES

1. EVERY CONTRACTOR, SUBCONTRACTOR, INSTALLER, ETC., SHALL STUDY AND COMPARE THE BIDDING DOCUMENTS WITH EACH OTHER, WITH THE EXISTING BUILDING AND THE ORIGINAL CONSTRUCTION DRAWINGS AVAILABLE FOR REVIEW ON SITE. ALL DRAWINGS, SPECIFICATIONS AND THE EXISTING FACILITY ARE AVAILABLE FOR REVIEW TO ENSURE THAT ALL CONDITIONS, BOTH PROPOSED AND EXISTING, CAN BE COMPARED FOR COMPATIBILITY. SHOULD A CONFLICT, ERROR, INCONSISTENCY OR AMBIGUITY BE DISCOVERED IT IS THE CONTRACTOR'S RESPONSIBILITY TO INFORM THE ARCHITECT IMMEDIATELY. BIDDERS ARE ADVISED THAT "AS-BUILT" CONDITIONS MAY VARY FROM THOSE SHOWN ON THE DRAWINGS. HOWEVER, FROM REVIEW OF ALL THE ITEMS PROVIDED IT SHOULD BE UNDERSTOOD THAT BIDDERS SHALL NOT LATER REQUEST, NOR EXPECT TO RECEIVE, ADDITIONAL PAYMENT FOR WORK RELATED TO VARIATIONS WHICH CAN BE DETERMINED BY EXAMINATION OF THIS INFORMATION, THE BUILDING AND THE SITE BY DATE SET FOR RECEIPT OF BIDS FOR THIS CONTRACT.
2. EXISTING CONDITIONS WERE TAKEN FROM ORIGINAL DRAWINGS & SITE VISITS AND MAY NOT REFLECT EXACT "AS-BUILT" CONDITIONS. CONTRACTOR SHALL FIELD VERIFY ALL EXISTING CONDITIONS PRIOR TO BEGINNING AND PERFORMING ANY WORK. CONTRACTOR SHALL COORDINATE NEW WORK AND DEMOLITION WITH ALL OTHER DISCIPLINES AND EXISTING CONDITIONS. ANY DISCREPANCIES SHALL BE REPORTED TO THE ARCHITECT PRIOR TO STARTING THE WORK.
3. THE INTENT OF THE CONTRACT DOCUMENTS IS TO INCLUDE ALL ITEMS NECESSARY FOR THE PROPER EXECUTION AND COMPLETION OF THE WORK BY THE CONTRACTOR. THE CONTRACT DOCUMENTS ARE COMPLIMENTARY AND WHAT IS REQUIRED BY ONE SHALL BE AS BINDING AS IF REQUIRED BY ALL. SHOULD A CONFLICT OCCUR, THE ARCHITECT WILL DETERMINE THE INTENT OF THE CONTRACT DOCUMENTS TO PROVIDE THE OWNER WITH A COMPLETED AND FUNCTIONAL FACILITY. PERFORMANCE BY THE CONTRACTOR SHALL BE REQUIRED ONLY TO THE EXTENT CONSISTENT WITH THESE CONTRACT DOCUMENTS AND REASONABLY INFERABLE FROM THEM AS BEING NECESSARY TO PRODUCE THE INTENDED "FINISHED" RESULTS.
4. THE CONTRACTOR SHALL THOROUGHLY REVIEW ALL BID DOCUMENTS TO FULLY COORDINATE ALL ITEMS, INCLUDING THEIR PROPER INSTALLATION, THAT WILL BE UTILIZED ON THIS PROJECT PRIOR TO BID SUBMITTAL. IN THE EVENT THAT ANY AMBIGUITY, DISCREPANCY, ERROR, INCONSISTENCY OR OMISSION IN OR BETWEEN THE BID DOCUMENTS EXIST OR APPEARS TO EXIST, THE CONTRACTOR SHALL NOTIFY THE ARCHITECT IN WRITING PRIOR TO THE BID SUBMITTAL FOR CLARIFICATION. THE CONTRACTOR ACKNOWLEDGES THAT HIS/HER SUBCONTRACTORS, FABRICATORS, & SUPPLIERS HAVE THOROUGHLY REVIEWED ALL BID DOCUMENTS AND REPORTED ANY AMBIGUITY, DISCREPANCY, ERROR, INCONSISTENCY OR OMISSION TO THE ARCHITECT IN WRITING PRIOR TO THE BID SUBMITTAL FOR CLARIFICATION. SHOULD A CLARIFICATION, DECISION, OR INTERPRETATION NOT BE REQUESTED BY THE CONTRACTOR OR RENDERED BY THE ARCHITECT, IT SHALL BE ASSUMED THAT THE CONTRACTOR HAS REVIEWED ALL THE BID DOCUMENTS AND HAS INCLUDED THE MOST COSTLY ITEM OR METHOD IN QUESTION REQUIRED TO RESOLVE THE AMBIGUITY, DISCREPENCY, ERROR, INCONSISTENCY OR OMISSION. ONE DOCUMENT DOES NOT TAKE PRECEDENT OVER ANOTHER WHEN INTERPRETING A DISCREPENCY.
5. THE CONTRACTOR AND SUBCONTRACTORS SHALL CHECK AND FIELD VERIFY ALL MEASUREMENTS, DIMENSIONS, ELEVATIONS AND ALIGNMENTS, INCLUDING THE EXISTING BUILDING AND SITE, BEFORE PROCEEDING WITH WORK. DISCREPANCIES SHALL BE IMMEDIATELY REPORTED TO THE ARCHITECT.
6. CONTRACTOR SHALL NOT SCALE DRAWINGS EXCEPT FOR GENERAL REFERENCES.
7. ALL FLOOR ELEVATIONS AND GRADES SHOWN ARE REFERENCED FROM THE OWNER PROVIDED SURVEY WITH THE INTENT OF ALL FLOORS BETWEEN THE EXISTING BUILDING AND NEW ADDITIONS ALIGNING.
8. WRAP ALL STEEL COLUMNS ENCASED IN MASONRY WITH WP. BUILDING PAPER OR 15 POUND ROOFING FELT.
9. NO PLUMBING SUPPLIES, WASTES, ETC. TO BE LOCATED IN EXTERIOR WALLS EXCEPT FROST PROOF HOSE BIBBS. ALL EXPOSED PIPES, DUCTS, CONDUIT, SHALL BE ENCLOSED WITH GYPSUM BOARD ON FURRING INCLUDING THOSE NOT SHOWN ON THE DRAWINGS.
10. ALL PLUMBING CHASES TO HAVE FULL BATT INSULATION.
11. ALL DRAWINGS AND SPECIFICATIONS ARE PROVIDED AS ONE UNIT. SHOULD A CONFLICT OCCUR, THE ARCHITECT WILL DETERMINE THE INTENT OF THE CORRECT DOCUMENTS TO PROVIDE THE OWNER WITH COMPLETED, FUNCTIONAL FACILITIES WITH A FULLY "FINISHED" APPEARANCE.
12. THESE DRAWINGS ARE FOR THIS SPECIFIC PROJECT AND NO OTHER USE IS AUTHORIZED.

ABBREVIATIONS

@	AT
A.B.	ANCHOR BOLT
ACOUST.	ACOUSTICAL
A.D.A.	AMERICANS WITH DISABILITIES ACT
ADJ.	ADJUSTABLE / ADJACENT
A.F.F.	ABOVE FINISHED FLOOR
ALT.	ALTERNATE
ALUM.	ALUMINUM
ANOD.	ANODIZED
APPROX.	APPROXIMATE / APPROXIMATELY
ARCH.	ARCHITECT/ ARCHITECTURAL
ASPH.	ASPHALT
A.V.L.	AUDIO, VIDEO & LIGHTING
B.C.S.	BABY CHANGING STATION
BD.	BOARD
BLDG.	BUILDING
BLK.	BLOCK
BLKG.	BLOCKING
BM.	BEAM
B/O	BY OTHERS
B.O.	BOTTOM OF
BOT.	BOTTOM
BRG.	BEARING
B.T.U.	BRITISH THERMAL UNIT
BTWN.	BETWEEN
B.U.	BUILT-UP (ROOF)
℄	CENTER LINE
CAB.	CABINET
CARP.	CARPET
C.J.	CONTROL JOINT
CLG.	CEILING
C.M.U.	CONCRETE MASONRY UNIT
C.O.	CLEAN OUT / CASED OPENING
COL.	COLUMN
COMP.	COMPOSITION
CONC.	CONCRETE
CONN.	CONNECTION
CONST.	CONSTRUCTION
CONT.	CONTINUOUS
CONTR.	CONTRACTOR
COORD.	COORDINATE
C.R.	CRUSHED ROCK
C.S.	COUNTER SINK / CAST STONE / CUT STONE
C.T.	COUNTER TOP
D.	DRYER
DBL.	DOUBLE
D.F.	DRINKING FOUNTAIN
DIA.	DIAMETER
DIAG.	DIAGONAL
DISP.	DISPENSER
DN.	DOWN
DP.	DEEP
DR.	DOOR
D.S.	DOWN SPOUT
DTL.	DETAIL
D/W	DISHWASHER
D.W.C.	DRYWALL CHANNEL
DWG.	DRAWING
EA.	EACH
E.D.F.	ELECTRIC DRINKING FOUNTAIN
E.I.F.S.	EXTERIOR INSULATED FINISH SYSTEM
E.J.	EXPANSION JOINT
ELECT.	ELECTRICAL
E.P.D.M.	ETHYLENE PROPYLENE DIENE MONOMER
E.P.S.	EXPANDED POLYSTYRENE
EQ.	EQUAL
EQUIP.	EQUIPMENT
E.W.	EACH WAY
E.W.C.	ELECTRIC WATER COOLER
EXIST.	EXISTING
EXP.	EXPANSION
EXT.	EXTERIOR
F.L.	FLOW LINE
FAB.	FABRICATE / FABRICATED
F.D.	FLOOR DRAIN
FDN.	FOUNDATION
F.E.	FIRE EXTINGUISHER
F.E.C.	FIRE EXTINGUISHER CABINET
FIN.	FINISH / FINISHED
FIX.	FIXTURE
FLR.	FLOOR
FLRG.	FLOORING
FLSHG.	FLASHING
F.R.	FIRE-RATED
FT.	FOOT
FTG.	FOOTING
F.V.	FIELD VERIFY
GA.	GAUGE
GALV.	GALVANIZED
G.B.	GRAB BARS
G.C.	GENERAL CONTRACTOR
GL.	GLASS
G. & N.	GLUE & NAIL
GRD.	GRADE
GYP.	GYPSUM
H/C	HANDICAPPED
H.C.	HOLLOW CORE
HD.	HEAD
HDR.	HEADER
HDWD.	HARDWOOD
H.M.	HOLLOW METAL
HORZ.	HORIZONTAL
HR.	HOUR
HT.	HEIGHT
HTR.	HEATER
HVYWT.	HEAVYWEIGHT
I.D.	INSIDE DIAMETER
IN.	INCH / INCHES
INST.	INSTRUCTIONS
INSUL.	INSULATED / INSULATION
INT.	INTERIOR
JAN.	JANITOR
JST.	JOIST
JT.	JOINT
LAM.	LAMINATED
LAV.	LAVATORY
LG.	LONG
LOC.	LOCATION / LOCATE
LT.	LIGHT
L.V.T.	LUXURY VINYL TILE
MANUF.	MANUFACTURED
MAS.	MASONRY
MATL.	MATERIAL
MAX.	MAXIMUM
M.C.J.	MASONRY CONTROL JOINT
M.D.O.	MEDIUM DENSITY OVERLAY
MECH.	MECHANICAL
MEMB.	MEMBRANE
MFR.	MANUFACTURER
MIN.	MINIMUM / MINUTE
MISC.	MISCELLANEOUS
MNTG.	MOUNTING
M.O.	MASONRY OPENING
MTD.	MOUNTED
MTL.	METAL
N	NORTH
NAT.	NATURAL
N.I.C.	NOT IN CONTRACT
NO. / #	NUMBER
NOM.	NOMINAL
N.T.S.	NOT TO SCALE
O.C.	ON-CENTER
O.D.	OUTSIDE DIAMETER
OH.	OVERHEAD
OPNG.	OPENING
OZ.	OUNCE
ℙ	PLATE
PC.	PRECAST
P.C.	PLASTIC COATED
P.E.J.	PREMOLDED EXPANSION JOINT
P.F.	PRE-FINISHED
P.L.	PROPERTY LINE
PLAS. LAM.	PLASTIC LAMINATE
PLUMB.	PLUMBING
PLYWD.	PLYWOOD
PR.	PAIR
PRE-FAB.	PRE-FABRICATED
PROJ.	PROJECT / PROJECTOR / PROJECTION
PT.	PAINT
P.T.	PAPER TOWEL
PTD.	PAINTED
PVC.	POLYVINYL CHLORIDE
R.	RADIUS / RISER
R.B.	RUBBER BASE
R.C.	ROUGH CEDAR
R.D.	ROOF DRAIN
REC.	RECESSED
RE:	REFERENCE
REF.	REFRIGERATOR
REINF.	REINFORCED
RELOC.	RELOCATE / RELOCATED
REMOV.	REMOVE / REMOVABLE
REQD.	REQUIRED
REQMT.	REQUIREMENT
RM.	ROOM
RNG.	RANGE
R.O.	RED OAK / ROUGH / OPENING
R.S.	ROUGH SAWN
R.S.C.	ROUGH SAWN CEDAR
S.&V.	STAIN & VARNISH
S.C.	SOLID CORE
SCHED.	SCHEDULE
SECT.	SECTION
S.F.	SQUARE FOOT
	STOREFRONT
SHT.	SHEET
SHTG.	SHEATHING
SIM.	SIMILAR
SPEC.	SPECIFICATION
SQ.	SQUARE
S.S.	STORM SEWER / SERVICE SINK / STAINLESS STEEL
S.S.C.	SMOOTH SAWN CEDAR
STD.	STANDARD
STL.	STEEL
STRUCT.	STRUCTURE / STRUCTURAL
SUSP.	SUSPENDED / SUSPENSION
SYST.	SYSTEM
T.	TREAD
T. & B.	TOP & BOTTOM
T. & G.	TONGUE & GROOVE
TEMP.	TEMPERED TEMPORARY
THK.	THICK
T.O.	TOP OF
T.P.	TOILET PAPER
T.S.	TUBE STEEL
TYP.	TYPICAL
U.N.O.	UNLESS NOTED OTHERWISE
V.C.T.	VINYL COMPOSITION TILE / VITREOUS CLAY TILE
VERT.	VERTICAL
V.W.C.	VINYL WALL COVERING
W.	WASHER / WIDTH / WIDE
W/	WITH
W.C.	WATER CLOSET
WD.	WOOD
W.F.	WIDE FLANGE
WIN.	WINDOW
W/O	WITHOUT
W.P.	WATERPROOF
WT.	WEIGHT
W.W.F.	WOVEN WIRE FABRIC

WORK BY OWNER

THE FOLLOWING ITEMS ARE NOT INCLUDED AS PART OF THE CONSTRUCTION CONTRACT AS DESCRIBED HEREIN AND IN THE PROJECT SPECIFICATIONS, HOWEVER SHOULD BE CONSIDERED FOR COORDINATION PURPOSES. SEE OWNER FOR SPECIFIC REQUIREMENTS AND CONTACTS FOR COORDINATION:

1. SECURITY SYSTEMS
2. TELEPHONE SYSTEMS
3. I.T. NETWORKING SYSTEMS
4. DATA CABLING
5. TELEVISION CABLE SYSTEMS
6. EXHIBIT DISPLAYS
7. FURNISHINGS AND EQUIPMENT
8. BLINDS, DRAPES, POWER SHADES OR ANY OTHER WINDOW TREATMENTS
9. ROOM AND DIRECTIONAL SIGNAGE
10. SOAP DISPENSERS
11. PAPER TOWEL DISPENSERS
12. TOILET PAPER DISPENSERS
13. TOILET SEAT COVER DISPENSERS
14. TRASH CANS
15. MIRRORS
16. THEMED SPACE DESIGN ELEMENTS
17. AUDIO/VIDEO & THEATRICAL LIGHTING SYSTEMS
18. INDOOR & OUTDOOR PLAY EQUIPMENT
19. THIRD-PARTY BUILDING CODE REQUIRED SPECIAL INSPECTIONS

MATERIAL SYMBOL LEGEND

▨	EARTH
⛶	CONCRETE
▨	BRICK VENEER
▩	CONCRETE BLOCK
⛶	GYPSUM BOARD / GROUT / CEMENTITIOUS FIRE PROTECTION
⛶	GLASS-MAT GYP. SHTG. BD.
▨	MANUFACTURED MASONRY VENEER
⊠	WOOD (ROUGH)
▤	PLYWOOD
▤	FINISHED WOOD
▩	CRUSHED ROCK
▭	STEEL / METAL
⛶	CAST STONE
▥	BATT INSULATION
▥	RIGID INSULATION
▨	FINISHED STONE / SOLID SURFACE
⛶	CEILING TILE / FIBERBOARD / CEMENTITIOUS ROOF DECK
■	NEW STUD WALL
⌒⌒⌒	BLOWN-IN INSULATION
┄	DEMO WALL / DOOR EXCEPT AS NOTED

NOT ALL MATERIALS ARE INDICATED ON THE SYMBOL LEGEND. THOSE MATERIALS NOT NOTED ABOVE ARE INDICATED ON SPECIFIC DETAILS, SECTIONS, OR ELEVATIONS.

NOT ALL SYMBOLS ARE NOTED, WHERE SYMBOLS ARE NOT NOTED, IT IS UNDERSTOOD THAT THE SYMBOL IS THE SAME AS IDENTICAL SYMBOLS NOTED.

DISCLAIMER

I HEREBY SPECIFY THAT THE DOCUMENTS INTENDED TO BE AUTHENTICATED BY MY SEAL ARE LIMITED TO:

BIDDING DOCUMENTS, CONTRACT DOCUMENTS, SPECIFICATION DIVISIONS 1 TO 12, DRAWING SHEETS COVER, G0.20, G0.30 AND A1.10-A7.10, ARCHITECTURAL ONLY.

I HEREBY DISCLAIM ANY RESPONSIBILITY FOR ANY STRUCTURAL, MECHANICAL, PLUMBING, ELECTRICAL, FIRE ALARM, FIRE SUPPRESSION, AUDIO/VISUAL AND THEATRICAL LIGHTING REQUIREMENTS INDICATED HEREIN AND THOSE FOUND IN THE REMAINDER AS BEING THE RESPONSIBILITY OF OTHER DESIGN PROFESSIONALS WHOSE SEALS APPEAR HEREINAFTER.

mantel teter

INDEX OF DRAWINGS

GENERAL

G0.10	COVER SHEET
G0.20	INDEX OF DRAWINGS / ABBREVIATIONS / MATERIALS SYMBOLS LEGEND / NOTES
G0.30	CODE SUMMARY / EGRESS PLAN

CIVIL SHEETS

C.100	SITE PLAN
C.200	GRADING PLAN
C.201	SPOT ELEVATIONS
C.300	ROOF DRAIN PLAN

STRUCTURAL SHEETS

S1.00	GENERAL NOTES
S1.01	GENERAL DETAILS
S2.00	FOUNDATION PLAN
S2.01	BRACE ELEVATIONS
S3.00	ROOF FRAMING PLAN
S4.00	FOUNDATION DETAILS
S4.01	FOUNDATION DETAILS
S5.00	ROOF FRAMING DETAILS
S5.01	ROOF FRAMING DETAILS
S6.00	SOUND BOOTH PLATFORM PLAN / DETAILS

ARCHITECTURAL SHEETS

A1.10	FLOOR PLAN
A1.11	DIMENSION PLAN / WALL TYPE SCHEDULE / NOTES
A1.20	REFLECTED CEILING PLAN
A1.30	ROOF PLAN
A1.31	ROOF PLAN DETAILS
A2.10	EXTERIOR BUILDING ELEVATIONS
A2.20	E.I.F.S. DETAILS
A3.10	BUILDING SECTIONS
A3.11	BUILDING SECTIONS
A3.20	WALL SECTIONS / DETAILS
A3.21	WALL SECTIONS / DETAILS
A4.10	ENLARGED PLANS / INTERIOR ELEVATIONS / DETAILS
A4.11	ENLARGED PLANS / INTERIOR ELEVATIONS / DETAILS
A5.10	PLAN DETAILS
A6.10	DOOR & FRAME SCHEDULE / DOOR & WINDOW ELEVATIONS / NOTES / DETAILS
A7.10	FLOOR FINISH PLAN

MECHANICAL SHEETS

M1.01	MECHANICAL FLOOR PLAN
M1.02	MECHANICAL ROOF PLAN
M2.01	MECHANICAL SCHEDULES

PLUMBING SHEETS

P0.0	PLUMBING SPECIFICATIONS
P1.1	PLUMBING PLAN

ELECTRICAL SHEETS

E1.0	ELECTRICAL LIGHTING PLAN
E2.0	ELECTRICAL POWER PLAN
E3.0	ELECTRICAL ROOF AND RISER DIAGRAM
E4.0	ELECTRICAL SPECIFICATIONS

AVL SHEETS

AVL 1.0	AVL GENERAL REQUIREMENTS
AVL 1.1	AVL SCHEDULES AND REFERENCES
AVL 1.2	AVL DEVICE SCHEDULES
AVL 1.21	AVL DEVICE SCHEDULES
AVL 1.22	AVL EQUIPMENT FLOOR PLAN
AVL 1.23	AVL EQUIPMENT CEILING PLAN
AVL 1.25	RIGGING AND BACKING
AVL 1.26	SECTIONS AND AVL DETAILS
AVL 2.0	ELECTRICAL REQUIREMENTS
AVL 2.1	ELECTRICAL SCHEDULES
AVL 2.21	AVL ELECTRICAL FLOOR PLAN
AVL 2.22	AVL ELECTRICAL CEILING PLAN
AVL 2.23	LIGHTING DETAILS
AVL 3.0	FLOOR BOX DETAILS
AVL 3.1	TECH BOOTH DETAILS
AVL 6.0	INSTALLATION REQUIREMENTS

NUMBER A-7731

2/05/2020

ARCHITECT: DAVID E. EVANS
ARCHITECT LICENSE NO: A-7731

mantel teter
consulting | architecture | developing
929 Walnut Street, Suite 5104 | Kansas City, Missouri 64106
toll-free: 877.215.5600 | www.mantelteter.com

PHASE II ADDITION TO:
THE SUMMIT
3381 NW CHIPMAN ROAD
LEE'S SUMMIT, MO 64081

PROJECT #: 15-678
ISSUE DATE: 2/05/2020
DRAWN BY:
CHECKED BY: BCR
REVISIONS:

SHEET No.
G0.20
INDEX OF DRAWINGS / ABBREVIATIONS/ MATERIALS SYMBOL LEGEND / NOTES

PLUMBING FIXTURE CALCULATIONS

EXISTING BUILDING OCCUPANT LOAD =	2,037
NEW ADDITION OCCUPANT LOAD =	466
TOTAL BUILDING OCCUPANT LOAD =	2,503
MALE OCCUPANCY: 2,503 / 2 =	1,252
FEMALE OCCUPANCY: 2,503 / 2 =	1,252

PLUMBING FIXTURE TYPE	REQUIRED	PROVIDED
WATER CLOSETS - MALE	1 PER 150 = 9	10
WATER CLOSETS - FEMALE	1 PER 75 = 17	18
DRINKING FOUNTAINS	1 PER 1000 = 3	3

CODE / EGRESS PLAN LEGEND

(#) OCCUPANT LOAD OF GIVEN SPACE/SPLIT EXIT LOAD ALONG PATH OF EGRESS

OL — ACTUAL EXIT LOAD
RE | EP — EGRESS PROVIDED
REQUIRED EGRESS

NOTES
1. THIS PLAN IS INTENDED FOR THE CONVENIENCE OF THE CODE OFFICIAL AND FIRE MARSHALL. IT DOCUMENTS THE MAJOR LIFE SAFETY AND EGRESS FEATURES OF THIS PROJECT, INCLUDING EXIT FLOW AND FIRE SEPARATION.
2. REFER TO MECHANICAL DRAWINGS FOR FIRE DAMPER LOCATIONS.
3. REFER TO FIRE ALARM DRAWINGS FOR FIRE ALARM SYSTEM AND REQUIREMENTS.
4. REFER TO FIRE PROTECTION DRAWINGS FOR STANDPIPE AND AUTOMATIC FIRE SPRINKLER SYSTEM.

CODE SUMMARY

BUILDING 'B'

OCCUPANCY TYPE: A-3

CONSTRUCTION TYPE: II-B

BASIC ALLOWABLE AREA (TABLE 503): 9,500 S.F.

ACTUAL BUILDING AREA: 10,086 S.F.

ALLOWABLE BLDG. HT. (TABLE 503): 55'-0"/ 2-STORIES

ACTUAL BUILDING HEIGHT: 45'-0" / 1-STORY

TOTAL ALLOWABLE AREA: UNLIMITED PER SECTION 507.6

FIRE PROTECTION OF COMPONENTS (TABLE 601)
- STRUCTURAL FRAME: 0-HOUR
- BEARING WALLS
  - EXTERIOR: 0-HOUR
  - INTERIOR: 0-HOUR
- NONBEARING WALLS AND PARTITIONS
  - EXTERIOR: 0-HOUR
  - INTERIOR: 0-HOUR
- SHAFT ENCLOSURES: 0-HOUR
- FLOOR CONSTRUCTION: 0-HOUR
- ROOF CONSTRUCTION: 0-HOUR

CODE SUMMARY

APPLICABLE CODES

INTERNATIONAL BUILDING CODE, 2018 EDITION
INTERNATIONAL EXISTING BUILDING CODE, 2018 EDITION
NATIONAL ELECTRICAL CODE, 2017 EDITION
INTERNATIONAL ENERGY CONSERVATION CODE, 2018 EDITION
INTERNATIONAL FIRE CODE, 2018 EDITION
INTERNATIONAL FUEL GAS CODE, 2018 EDITION
INTERNATIONAL MECHANICAL CODE, 2018 EDITION
INTERNATIONAL PLUMBING CODE, 2018 EDITION
ACCESSIBLE AND USABLE BUILDINGS AND FACILITIES, ICC/ANSI A117.1-2017

EXISTING BUILDING 'A'

OCCUPANCY TYPE: A-3, E (NON-SEPARATED USE)

CONSTRUCTION TYPE: II-B

BASIC ALLOWABLE AREA (TABLE 503): 9,500 S.F.

ACTUAL BUILDING AREA: 34,340 S.F.

ALLOWABLE BLDG. HT. (TABLE 503): 55'-0"/ 2-STORIES

ACTUAL BUILDING HEIGHT: 45'-0" / 1-STORY

TOTAL ALLOWABLE AREA: UNLIMITED PER SECTION 507.6

FIRE PROTECTION OF COMPONENTS (TABLE 601)
- STRUCTURAL FRAME: 0-HOUR
- BEARING WALLS
  - EXTERIOR: 0-HOUR
  - INTERIOR: 0-HOUR
- NONBEARING WALLS AND PARTITIONS
  - EXTERIOR: 0-HOUR
  - INTERIOR: 0-HOUR
- SHAFT ENCLOSURES: 0-HOUR
- FLOOR CONSTRUCTION: 0-HOUR
- ROOF CONSTRUCTION: 0-HOUR

NOTES:
1. AN AUTOMATIC SPRINKLER SYSTEM IS INSTALLED IN BUILDING "A" AND WILL BE INSTALLED IN BUILDING "B"
2. A FIRE ALARM SYSTEM IS INSTALLED IN BUILDING "A" AND WILL BE EXTENDED THROUGHOUT BUILDING "B"
3. PER TABLE 1020.1 CORRIDORS ARE NOT-RATED DUE TO THE AUTOMATIC SPRINKLER SYSTEM THROUGHOUT THE FACILITY

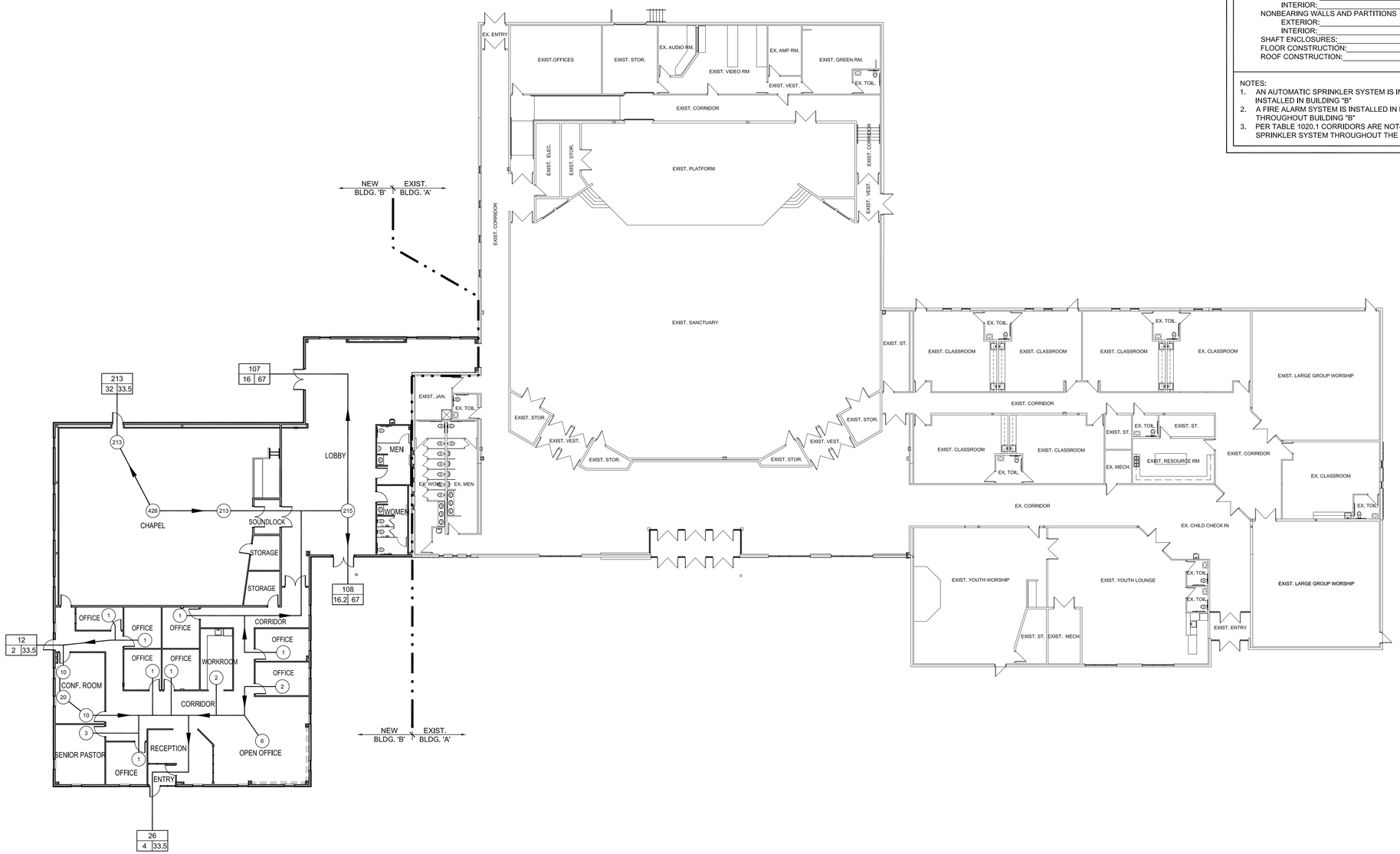

1 / G0.30 **EGRESS PLAN**
1/16" = 1'-0"

NORTH

STATE OF MISSOURI
NUMBER A-7731
REGISTERED ARCHITECT
2/05/2020

ARCHITECT: DAVID E. EVANS
ARCHITECT LICENSE NO: A-7731

mantel teter
consulting | architecture | developing
929 Walnut Street, Suite 5104 | Kansas City, Missouri 64106
toll-free: 877.215.5600 | www.manteltteter.com

PHASE II ADDITION TO:
THE SUMMIT
3381 NW CHIPMAN ROAD
LEE'S SUMMIT, MO 64081

PROJECT #: 15-678
ISSUE DATE: 2/05/2020
DRAWN BY:
CHECKED BY: BCR
REVISIONS:

SHEET No.
G0.30
CODE SUMMARY

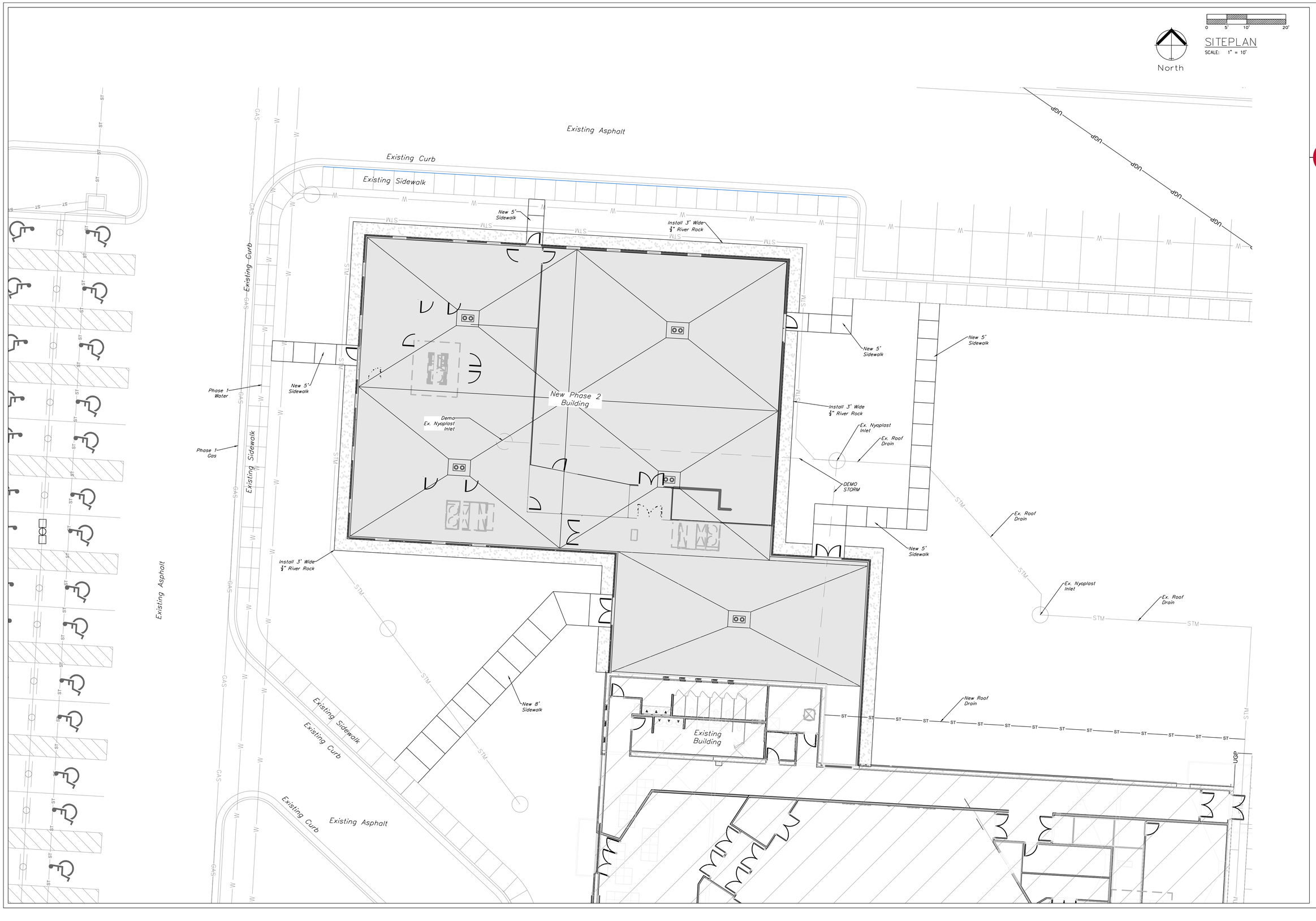

ENGINEERING SOLUTIONS
ENGINEERING & SURVEYING
50 SE 30TH STREET
LEE'S SUMMIT, MO 64082
P:(816) 623-9888 F:(816)623-9849

Professional Registration
Missouri
Engineering 2005002186-D
Surveying 2005008319-D
Kansas
Engineering E-1695
Surveying LS-218
Oklahoma
Engineering 6254
Nebraska
Engineering CA2821

The Summit Church
3381 Northwest Chipman Road
Lee's Summit, Jackson County, Missouri

Project: THE SUMMIT CHURCH, LSMO
Issue Date: July 29, 2016

The Summit Church
Phase 2
Lee's Summit, Jackson County, Missouri

STATE OF MISSOURI
MATTHEW J. SCHLICHT
NUMBER
PE-2006019708
PROFESSIONAL ENGINEER

Matthew J. Schlicht
MO PE 2006019708
KS PE 19071
OK PE 25226
NE PE E-14335

REVISIONS

C.100

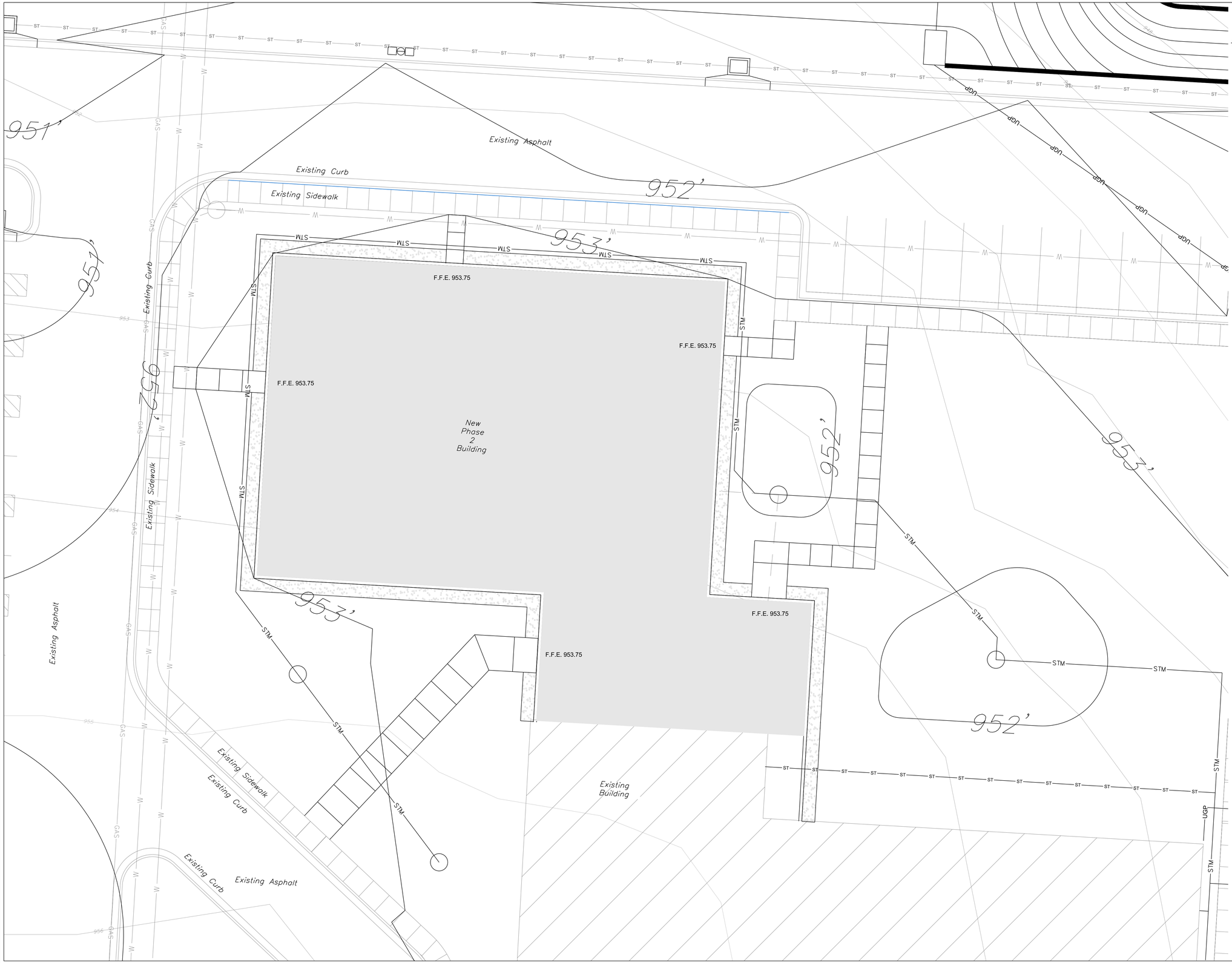

GRADING PLAN

SCALE: 1" = 10'

ENGINEERING SOLUTIONS
ENGINEERING & SURVEYING
50 SE 30TH STREET
LEE'S SUMMIT, MO 64082
P:(816) 623-9888 F:(816)623-9849

Professional Registration
Missouri
Engineering 2005002186-D
Surveying 2005008319-D
Kansas
Engineering E-1695
Surveying LS-218
Oklahoma
Engineering 6254
Nebraska
Engineering CA2821

The Summit Church
3381 Northwest Chipman Road
Lee's Summit, Jackson County, Missouri

Project:
THE SUMMIT CHURCH, LSMO

Issue Date:
July 29, 2016

Grading Plan

The Summit Church
Phase 2
Lee's Summit, Jackson County, Missouri

STATE OF MISSOURI
MATTHEW J. SCHLICHT
NUMBER
PE2006019708
PROFESSIONAL ENGINEER

Matthew J. Schlicht
MO PE 2006019708
KS PE 19071
OK PE 25226
NE PE E-14335

REVISIONS

C.200

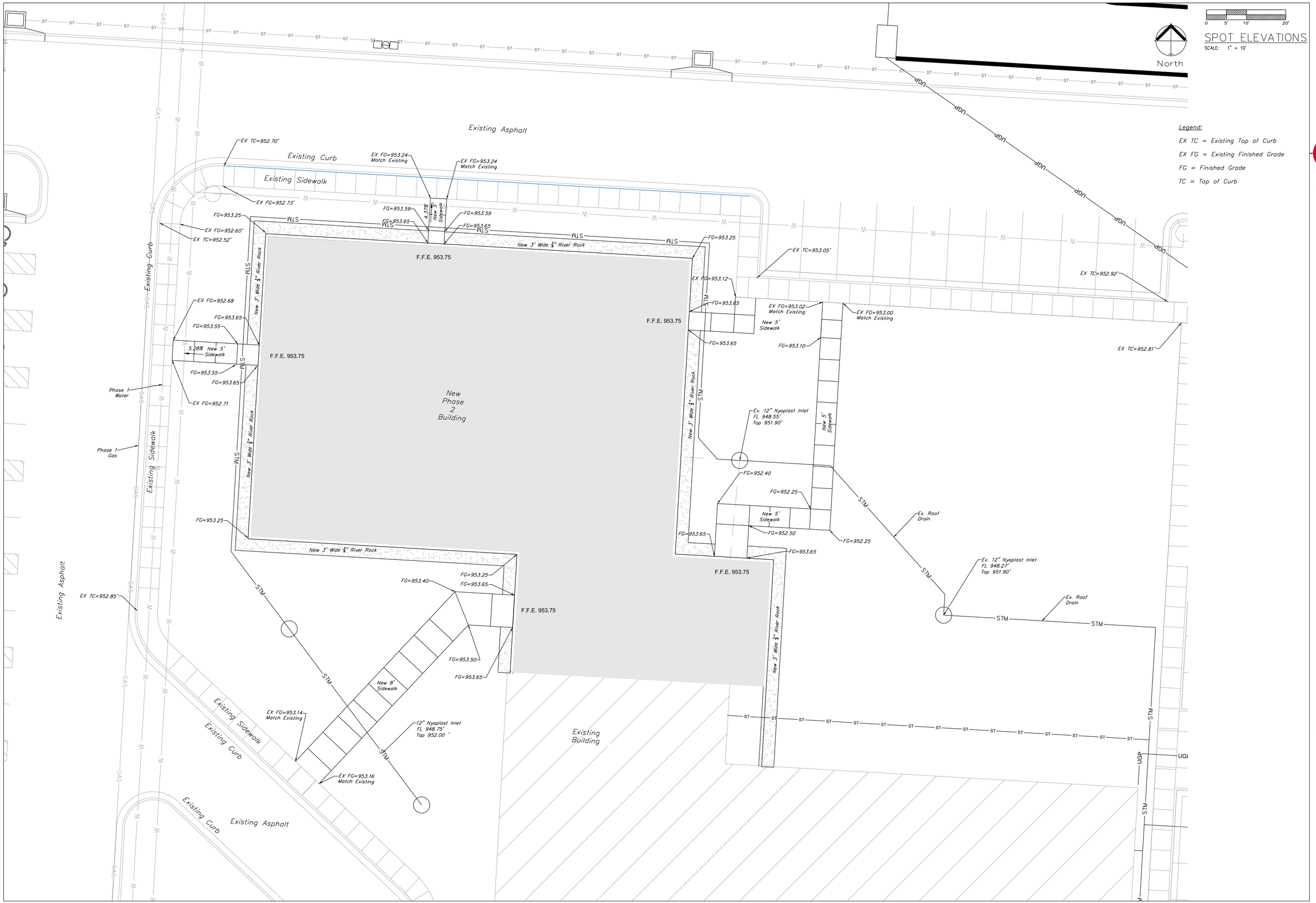

ENGINEERING SOLUTIONS
ENGINEERING & SURVEYING
50 SE 30TH STREET
LEE'S SUMMIT, MO 64082
P:(816) 623-9888 F:(816)623-9849

Professional Registration
Missouri
Engineering 2005002186-D
Surveying 2005008319-D
Kansas
Engineering E-1695
Surveying LS-218
Oklahoma
Engineering 6254
Nebraska
Engineering CA2821

The Summit Church
3381 Northwest Chipman Road
Lee's Summit, Jackson County, Missouri

Project:
THE SUMMIT CHURCH LSMO

Issue Date:
July 25, 2016

Spot Elevations

The Summit Church
Phase 2
Lee's Summit, Jackson County, Missouri

STATE OF MISSOURI
MATTHEW J. SCHLICHT
NUMBER
PE-2006019708
PROFESSIONAL ENGINEER

Matthew J. Schlicht
MO PE 2006019708
KS PE 19071
OK PE 25226
NE PE E-14335

REVISIONS

C.201

ROOF DRAIN PLAN

SCALE: 1" = 50'

0 25' 50' 100'

North

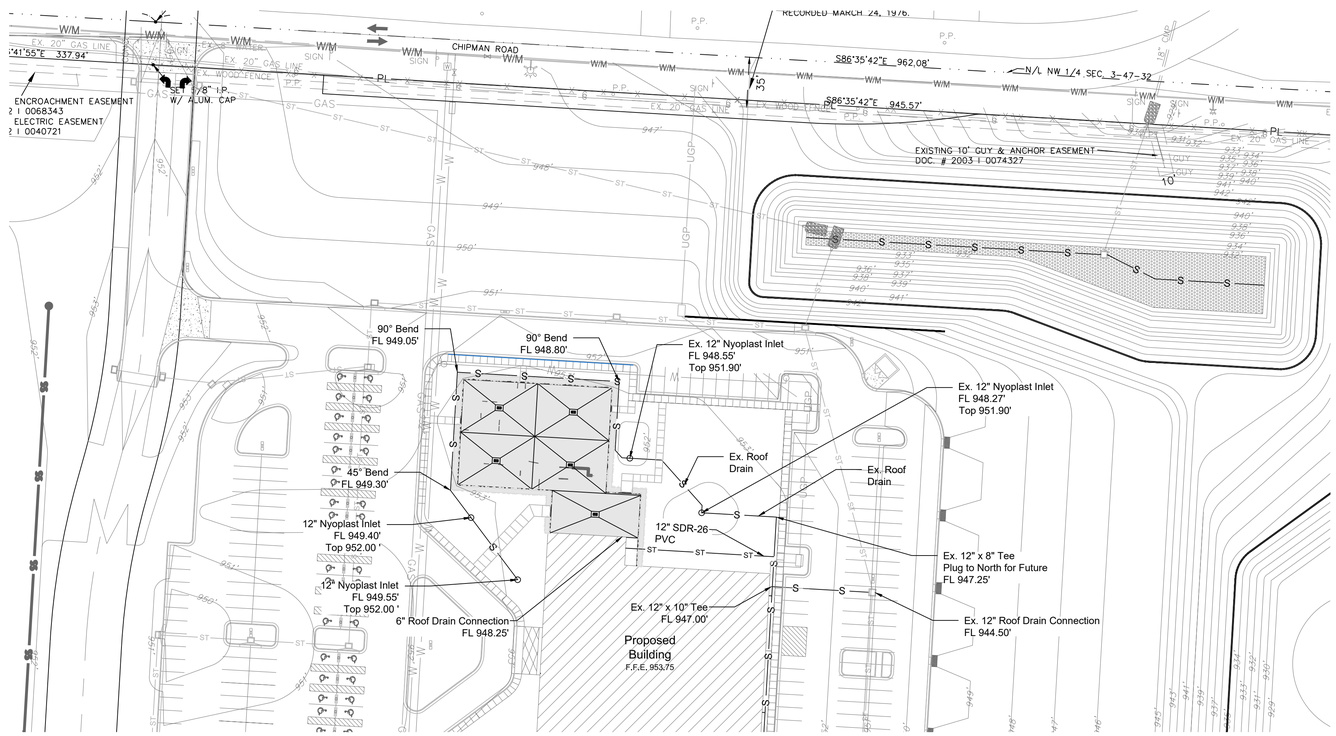

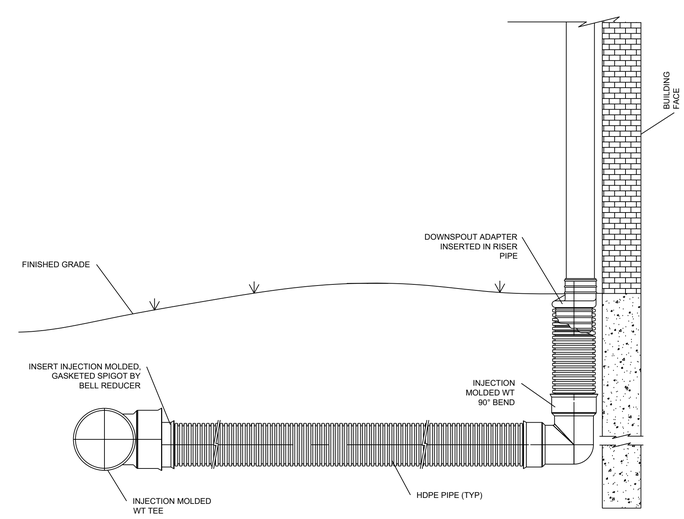

ENGINEERING SOLUTIONS
ENGINEERING & SURVEYING
50 SE 30TH STREET
LEE'S SUMMIT, MO 64082
P:(816) 623-9888 F:(816)623-9849

Professional Registration
Missouri
Engineering 2005002186-D
Surveying 2005008319-D
Kansas
Engineering E-1695
Surveying LS-218
Oklahoma
Engineering 6254
Nebraska
Engineering CA2821

The Summit Church
3381 Northwest Chipman Road
Lee's Summit, Jackson County, Missouri

Project: THE SUMMIT CHURCH, LSHQ

Issue Date: July 29, 2016

ROOF DRAIN PLAN
The Summit Church
Phase 2
Lee's Summit, Jackson County, Missouri

STATE OF MISSOURI
MATTHEW J. SCHLICHT
NUMBER
2006019708
PROFESSIONAL ENGINEER

Matthew J. Schlicht
MO PE 2006019708
KS PE 19071
OK PE 25226
NE PE E-14335

REVISIONS

C.300

STRUCTURAL GENERAL NOTES:

DESIGN:

1. All design and construction work for this project shall conform to the 2018 edition of the International Building Code (IBC).
2. DESIGN LOADS:
   - A. Risk Category III
   - B. Roof Loads:
     - Dead Load ..... 25 psf
     - Live Load ..... 20 psf
     - Ground Snow Load ..... 20 psf
     - Flat roof snow load (snow drifting additional) .... 22 psf
     - Snow exposure factor 1.0
     - Thermal Factor 1.0
   - C. Wind Load:
     - Ultimate Wind speed based on 3 sec gust ..... 120 mph
     - Wind Exposure C
   - D. Seismic:
     - Spectral response coefficient ..... S_{ds} = 0.086
       S_{d1} = 0.068
     - Site Class C
     - Seismic Design Category ..... B
3. Shop drawings shall be submitted for review by the Architect and Engineer prior to fabrication.
4. The structural seal provided for this building shall cover the design of the elements and systems shown on these drawings only. Johnston Burkholder Associates has not designed nor reviewed the design of the existing building or other elements in areas unaffected by the work shown herein and accepts no responsibility for the structural adequacy or performance of the existing building or other elements in areas unaffected by new work.

CONSTRUCTION:

1. Furnish all labor, materials and equipment necessary to complete the work shown or implied by these drawings.
2. The General Contractor shall be responsible for verifying all dimensions and elevations with the Architectural and Mechanical drawings and the existing conditions. See Architectural and Mechanical drawings for embedded items not shown herein and to verify size and location of all openings. Before executing work shown herein, the Contractor shall examine actual job conditions and report to the Engineer any error, omission or difficulty affecting the work.
3. The structure is designed to be self–supporting and stable after erection of the structure has been fully completed. It is the contractors responsibility to determine erection sequencing and provide shoring and bracing as required to erect the structure.
4. The General Contractor shall provide adequate shoring or bracing during construction to resist forces such as wind and unbalanced loading due to construction.
5. Johnston Burkholder Associates, LLC, its employees, and representatives shall not be responsible for, and will not have control of, construction means, methods, techniques, sequences or procedures, or for safety precautions and programs in connection with the construction work; nor will they be responsible for any failure by the contractor to perform or complete construction in accordance with the contract documents.
6. The General Contractor shall be responsible for protecting the existing building during construction.

SITEWORK / FOUNDATIONS:

1. A site investigation and geotechnical report was prepared by Terracon Consultants, Inc. (dated 09/09/14). The Contractor shall read and become familiar with the report prior to bidding. All site work shall conform to soils report and/or specifications.
2. All foundations are designed to bear on naturally occurring soils or engineered fill capable of safely sustaining 2500 psf minimum net allowable bearing pressure. If suitable bearing capacity as determined by a qualified geotechnical engineer is not encountered at the elevation indicated on the drawings, the Contractor may, upon the recommendation of the Geotechnical Engineer, overexcavate until suitable bearing material is encountered. Overexcavations may be backfilled with lean concrete.
3. Foundation wall backfill shall not be unbalanced by more than two feet on either side at any time.
4. All exterior foundations shall have a minimum bearing depth of 3'–0" below exterior grade elevation.

CONCRETE:

1. All concrete and reinforcement has been designed in accordance with the American Concrete Institute (ACI) Standard Building Code Requirements for Reinforced Concrete (ACI 318). All concrete work shall conform to the ACI Specifications for Structural Concrete (ACI 301) and the latest applicable recommendations of the ACI Manual of Standard Practice for Detailing Reinforced Concrete (ACI 315).
2. Materials shall conform with:
   - A. Cement–ASTM C150 Type I or II
   - B. Aggregate–ASTM C33
   - C. Water – Potable
3. All concrete used in the work shall have the following properties:
   - A. Footings
     - 3000 psi strength (f'c) at 28 days
     - 0.50 maximum water/cement ratio
     - less than 3% air content
     - 4" ± 1" slump at point of placement
   - B. Interior slabs–on–grade
     - 4000 psi strength (f'c) at 28 days
     - 0.53 maximum water/cement ratio
     - less than 3% air content
     - 4" ± 1" slump at point of placement
   - C. Exterior slabs–on–grade
     - 4000 psi strength (f'c) at 28 days
     - 0.40 maximum water/cement ratio
     - 6% ± 1.5% air content
     - 4" ± 1" slump at point of placement
4. Chlorides in any form or concentration shall not be added to any concrete.

REINFORCING STEEL:

1. All reinforcing steel shall be ASTM A615 Grade 60.
2. All welded wire fabric shall be ASTM A185 cold drawn wire. Lap 1 mesh spacing minimum at all splices.
3. Accessories shall be as specified in the latest edition of Concrete Reinforcing Steel Institute Design Handbook "Placing Reinforcing Bars". Locate and support reinforcing by metal chairs, runners, bolsters, spacers, and hangers, as required to secure against displacement. Maximum accessory spacing shall be 4'–0" on center.
4. The Contractor shall provide 500 pounds of extra stock reinforcing (labor for placing included) for field use as directed by the Architect/ Engineer.

CAST–IN–PLACE CONCRETE–EXECUTION:

1. All concrete is reinforced unless specifically noted as "unreinforced". Reinforce all concrete not otherwise shown with the same steel as shown in similar sections. Comply with ACI 304, "Recommended Practice for Measuring, Mixing, Transporting, and Placing Concrete".
2. Cold weather conditions: When the average daily air temperature for 3 consecutive days is expected to be below 40 deg F and the air temperature does not exceed 50 deg F for more than 12 consecutive hours during this time, all concrete placement shall comply with the provisions of ACI 306 and as herein specified. Protect concrete work from physical damage or reduced strength that could be caused by frost, freezing actions, or low temperatures.
3. Hot weather conditions: When elevated temperatures, humidity, and wind factors exist, all concrete shall comply with the provisions of ACI 305 and as herein specified.
4. Perform curing of concrete by curing and sealing compound, by moist curing, moisture–retaining cover curing, or by combinations thereof.
5. Maintain minimum concrete coverage for reinforcing as indicated unless otherwise noted in the drawings:
   - A. Earth formed/cast directly against soil ..... 3 in
   - B. Cast against forms but exposed to earth or weather:
     - #6 and larger ..... 2 in
     - #5 and smaller .....1 1/2 in
   - C. Slabs and walls not exposed to earth/weather .....3/4 in
   - D. Other ..... 2 in
6. All vertical steel and continuous steel shall be lap spliced using Class B splices, per ACI 318, unless noted otherwise on the drawings.
7. Control joints in slab–on–grade shall be as shown on the drawings. Where not shown, limit controlled areas to not more than 12 feet on any side. Do not interchange construction and saw joints where a particular joint detail is specified on the drawings. A saw joint must terminate at a construction joint.
8. Coordinate concrete finishes, recessed areas, reveals, embedded items, special joint patterns, etc. with the Architectural drawings and specifications. Provide a 3/4" chamfer at all exposed edges of concrete. No aluminum items shall be embedded in concrete.
9. Provide (1) #5 x 4'–0" diagonally at each face of all steps in walls and continuous footings.
10. Neither cutting nor coring of concrete shall be allowed. All openings in concrete slabs and walls shall be reinforced with (1) #5 bar (opening dimension plus 2 ft. each side) along each side of opening, and (1) #5 x 4'–0" diagonally at each corner. Reinforce all re–entrant corners with (1) #5 x 4'–0" diagonally. Add additional steel to match above for each layer of steel shown (see opening reinforcement and re–entrant detail).
11. At the corners of all walls and continuous footings, supply corner bars 4'–0" long (2'–0" each way) in the outside face matching the size and spacing of the horizontal bars. Where no vertical bars are shown at wall corners, supply (3) #4 vertical support bars.
12. QUALITY CONTROL TESTING DURING CONSTRUCTION
    - A. General: The Owner shall employ a testing laboratory to perform tests and to submit test reports.
    - B. Sampling and testing for quality control during placement of concrete shall include the following, as directed by the Architect.
    - C. Sampling Fresh Concrete: ASTM C 172, except modified for slump to comply with ASTM C 94.
      1. Slump: ASTM C 143; one test at point of discharge for each days pour of each type of concrete; additional tests when concrete consistency appears to have changed.
      2. Air Content: ASTM C 173, volumetric method for lightweight or normal weight concrete; ASTM C 231 pressure method for normal weight concrete; one for each days pour of each type of air–entrained concrete.
      3. Concrete Temperature: Test hourly when air temperature is 40 deg F (4 deg C) and below, when 80 deg F (27 deg C) and above, and each time a set of compression test specimens is made.
      4. Compression Test Specimen: ASTM C 31; one set of 4 standard cylinders for each compressive strength test, unless otherwise directed. Mold and store cylinders for laboratory–cured test specimens except when field–cure test specimens are required.
      5. Compressive Strength Tests: ASTM C 39; one set for each days pour exceeding 5 cu. yds. plus additional sets for each 50 cu. yds. more than the first 25 cu. yds. of each concrete class placed in any one day; one specimen tested at 7 days, two specimens tested at 28 days, and one specimen retained in reserve for later testing if required.
         - a. Strength level of concrete will be considered satisfactory if averages of sets of three consecutive strength test results equal or exceed specified compressive strength, and no individual strength test result falls below specified compressive strength by more than 500 psi.
13. POST–INSTALLED ANCHORS
    - A. Post–installed anchors shall be installed in accordance with the Manufacturers Printed Installation Instructions (MPII). If anchors are to be installed in a horizontal or upward direction personnel shall be trained to install adhesive anchors through the ACI/CRSI Adhesive Anchor Installer Certification Program.

STRUCTURAL STEEL:

1. All structural steel shall be ASTM A36 for shapes and plates, ASTM A53 for pipes, and ASTM A500, Grade B or C or ASTM 1085 for structural tubes, unless noted otherwise. W shapes shall be ASTM A992 or ASTM A572, Grade 50. Fabrication and erection shall be in accordance with the latest edition of AISC Manual of Steel Construction.
2. All anchor rods shall be ASTM F1554 Grade 36 unless noted otherwise. Anchor rods shall have a heavy hex nut welded to the rod at the embedded end unless noted otherwise on the drawings. Anchor rods shall be located using templates and set in place with exposed threads of rods greased before placing concrete.
3. All beam connections shall be welded or bolted as detailed on the drawings or per the latest edition of the American Institute of Steel Construction Handbook, "Framed Beam Connections". Bolts shall be 3/4" diameter A325N tightened to the snug tight condition unless noted otherwise on the drawings.
4. All welding shall conform to the current American Welding Society Specifications and be performed by certified welders.
5. Unless noted otherwise, all openings in metal roof deck shall have 3x3x1/4" angle frame set between joists. Support mechanical equipment with 4x4x5/16" angles laid between joists and 4x4x5/16" angles (length = mechanical unit + 2'–0" or 4'–0" minimum) welded to top chord of joists to distribute load to joist panel points. As an alternate, provide 4x4x5/16" x0'–6" angles welded to top chord of joist and reinforce joist per Section 11–S1.01. Where curb is parallel to joist, maximum spacing between angles laid between joists shall be 6'–0", or as required by equipment manufacturer, whichever is less.
7. All structural steel shall have one shop coat of rust inhibitor primer paint conforming to the specifications. Field touch up all unpainted, nicked and welded areas.
8. All exterior steel shall be galvanized.
9. The Contractor shall provide for 1/2 ton of miscellaneous structural steel shapes (labor for detailing and erection included) for field use as directed by the Architect/Engineer.
10. No permanent suspended loads are to be supported by metal deck.

LIGHT GAGE METAL FRAMING:

1. All light gage structural joists, studs, track and accessories shall be designed in accordance with the latest edition of the American Iron and Steel Institute (AISI) "Specification for the Design of Cold Formed Steel Structural Members", and shall be of the type, size, gage and spacing shown on the drawings.
2. All 16 gage and heavier studs and joists shall be formed from corrosion–resistant steel corresponding to the requirements of ASTM A1003 or A653, with a minimum yield strength of 50 ksi. All 18 gage and lighter studs, joists, track and accessories shall be formed from corrosion–resistant steel corresponding to the requirements of ASTM A1003 or A653, with a minimum yield strength of 33 ksi.
3. The design and details provided on these drawings are for the final in–place conditions. The Contractor shall be responsible for temporary bracing, as required, prior to completion of all lateral support systems.
4. Fastening of components shall be with self–drilling screws, powder actuated fasteners (PAF) or welding. Screws and PAF's shall be installed such that a minimum 3/4" on center spacing and 3/4" edge distance is maintained. Fasteners in concrete shall have a minium spacing of 3".
5. All welding shall be according to the American Welding Society (AWS) D1.3 Specification for Welding Sheet Steel in Structures, and shall be performed by certified welders. Consult AWS D19.0 Welding Zinc Coated Steel and ANSI standard Z49.1 for information regarding safe welding procedures. Weld sizes shall match the thickness of the thinner part. All welds shall be touched up with a zinc–rich paint on each side of the stud.
6. Prior to fabrication of framing, the Contractor shall submit fabrication and erection drawings to the Architect/Engineer for review.
7. All framing components shall be cut squarely for attachment to perpendicular members, or, as required, for an angular fit against abutting members. All field cutting shall be done by sawing or shearing.
8. Unless noted otherwise, abutting lengths of track shall be spliced together using a piece of stud of the same width and thickness and (3) #10 screws per flange on each side of the splice.
9. Axially loaded studs shall be installed in a manner which will ensure that their ends are positioned against the inside of the track web prior to fastening. Studs shall be securely fastened to both flanges of the top and bottom track with (1) #10 screw.
10. Wall stud bridging shall be attached in a manner to prevent stud rotation. Unless noted otherwise, bridging rows shall be installed at 6'–0" on center unless otherwise noted on drawings.
11. A minimum of 3 studs shall be used at all corners and intersections of load bearing walls.
12. Provision for structure vertical movement shall be provided where indicated on the drawings. Continuous bridging shall be provided within 12" of the top of stud where movement is provided by a deep leg slip track.
13. Boxed headers over openings in load–bearing and shear wall framing shall be constructed using unpunched stud members. Studs and tracks framing headers and sills of openings shall not be spliced.
14. Joists shall be located directly over bearing studs unless a load distribution member is detailed at the top of the bearing wall. Track members with a gage thickness similar to the stud framing shall not be used as a distribution member.
15. Joists shall be installed such that web punch outs are not located over supports or within 9" of a support.
16. Web stiffeners shall be provided at reaction points and/or at points of concentrated loads where indicated on the drawings. Unless noted otherwise, stiffeners shall be full depth tracks or studs of the same gage as the joist attached with a minimum of (4) #10 screws evenly spaced.
17. Joist bridging shall be attached in a manner to prevent joist rotation. Unless noted otherwise, one row of bridging shall be installed near midspan of joists spans up to 14' and 2 rows of bridging shall be installed near one–third points of joist spans from 14' to 20'.
18. End blocking shall be provided where joist ends are not otherwise restrained from rotation.
19. Wall stud and joist bridging shall be installed at the time of light gage erection. Member punch outs shall be aligned to allow bridging installation.
20. Sheathing shall be attached to the flange of each framing member as noted on the drawings. Where attachment is not noted, a maximum attachment spacing of 12" on center shall be used.
21. Unless noted on the drawings, built up members shall be attached as follows:
    - Back to back studs/joists ..... (2) #10 screws at 16" on center
    - Boxed studs/joists with flange tips connected ..... 1"x1/8" groove welds at 12" on center
    - Boxed headers with stud and track members ..... #10 screw thru each flange at 16" on center
22. Prefabricated panels shall be square, with components attached in a manner to prevent racking and minimize distortion while lifting. The Contractor shall provide temporary bracing where required.
23. Member Designation: 600S162–43:
    - 600 – Web size (6")
    - S – Member type; S – stud, T – track
    - 162 – Flange size (1 5/8")
    - 43 – Member thickness (mils); 33– 20 gage, 43– 18 gage, 54– 16 gage
24. Acceptable Fasteners (UNO): (Substitutions shall be submitted for review)
    - Screws; Stud to Stud/Track
      - Buildex TEK
      - Hilti Kwik–Pro
      - Simpson XS or FPHSD
    - Stud/Track to Concrete; 1/4" diameter
      - Simpson Titen HD–Mini
      - Hilti Kwik Con II+
      - Buildex Tapcon
      - Powers Tapper
    - Powder Actuated Fasteners (PAF);
      - Stud/Track to Concrete; 0.145" dia x 1" (Minimum)
        - Hilti X–U
        - Simpson PDP
        - Ramset Power Point SP114
      - Stud/Track to Steel, 0.157" diameter with length based on steel thickness
        - Hilti X–U
        - Simpson PDP

STEEL JOISTS AND JOIST GIRDERS:

1. Steel joists and joist girders shall conform to the current specifications of, and be manufactured by, a member of the Steel Joist Institute (SJI). Joists shall have bridging per the SJI Standard Specification and shall be supplemented as indicated on the drawings.
2. All joist end seats shall have a minimum 3/16" thickness.
3. Weld all steel joists to beams, angles, or bearing plates with 3/16 inch fillet welds, 2 1/2 inches long each side of joist seat. When a joist occurs adjacent to, or at a column, it shall be bolted to the supporting steel, in conformance with OSHA requirements.
4. Steel roof joists shall be designed for net uplift as follows:
   - Perimeter edges of building (9.3' wide strip).....23 psf
   - All other areas ..... 10 psf
   - All joist webs shall be designed to resist a minimum of 25% of the joist end reaction in compression. Provide additional bottom chord bridging as required for the net uplift requirements stated above and per Section 5.12 of the SJI Standard Specification.
5. Steel joist chords are not designed for concentrated loads. Either place loads at panel points, field weld (2) 2x2x3/16" angles from point of load to nearest panel point on opposite chord, or reinforce chord with 4x4x5/16" angle to distribute load to adjacent panel points.
6. Steel joists shall have a minimum top chord thickness of 1/8" when powder actuated or pneumatic fasteners are used to attach the metal roof deck. (Refer to ANSI/SDI–RD1.0 section 3.2)
7. All steel joists and joist girders shall have one shop coat of rust inhibitor primer paint conforming to the specifications. Field touch up all unpainted, nicked and welded areas.
8. All joist girder endseats shall be 7 1/2" deep.
9. Weld all steel joist girders to column cap plates with 1/4 inch fillet welds, 4 inches long each side of joist girder seat.

SPECIAL INSPECTIONS:

1. Special inspections shall be performed in accordance with Chapter 17 of the 2018 International Building Code (IBC). All special inspectors shall be qualified for inspection of the particular type of construction requiring special inspection and must be approved by the building official. Special inspectors shall perform the duties and responsibilities outlined in Chapter 17 of the 2018 edition of the IBC. Reports shall be submitted to the building official, architect, and engineer of record in a timely manner.
2. Types of work requiring special inspection:
   - A: Concrete:
     1. Periodic inspection of the placement of reinforcing steel.
     2. Continuous inspection of the placement of anchors in concrete including, size, length, projection, and location.
     3. Sampling of fresh concrete. Perform tests for slump, air content, and temperature. Cast specimens for strength tests (see Cast–in–Place Concrete – Execution notes).
     4. Periodic inspection of anchors installed vertically downward and continuous inspection of anchors installed horizontal or overhead in hardened concrete. Inspections shall include hole size and depth, cleaning procedure, materials, and location. All anchors installed in hardened concrete are subject to inspection.
     5. Periodic inspection for maintenance of curing and temperature techniques.
     6. Periodic inspection of formwork for shape, location, and dimensions.
   - C: Structural Steel:
     1. Periodic inspection for material verifications.
        - a. High strength bolts, nuts and washers.
        - b. Structural steel identification.
        - c. Cold formed steel deck identification.
     2. Periodic inspection of bearing–type bolted connections. Bolts shall be tightened to a snug–tight condition and observed only to ensure that all plies of the connected element have been brought into snug contact.
     3. Qualifications of welding procedures and welders shall be verified prior to start of work. Periodic inspections shall be made of work in progress and a visual inspection of all welds shall be made prior to completion.
        - a. Periodic inspection of single–pass welds.
        - b. Periodic inspection of steel deck attachments.
        - c. Continuous inspection of fillet welds exceeding $\frac{5}{16}$" and complete or partial joint penetration welds.
        - d. Periodic inspection of weld filler materials.
   - D: Light Gage Construction:
     1. Periodic inspection of headers and stud wall framing.
     2.
   - E: Shop Fabrication:
     1. Special inspection is required for shop fabricated members unless the fabricator(s) is registered and approved to perform work without special inspections. Approval shall be based on the fabricator's written procedural and quality control manuals and periodic auditing of fabrication practices by an approved agency.

JOHNSTON BURKHOLDER ASSOCIATES
consulting structural engineers
930 Central · Kansas City, Mo 64105
(816) 421-4200 · www.jbaengr.com
JBA – #18290 – CMP

PHASE II ADDITION TO:
THE SUMMIT
3381 NW CHIPMAN ROAD
LEE'S SUMMIT, MO 64081

PROJECT #: 15-678
ISSUE DATE: 02/05/2020
DRAWN BY: CMP
CHECKED BY: BJH
REVISIONS:

SHEET No.
S1.00
GENERAL NOTES

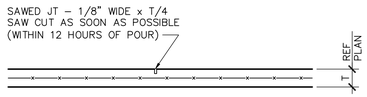

1 TYP SLAB SAW JOINT
NTS

NOTE:
AT CONTRACTORS OPTION, 1/2" DIAMETER x 12" SMOOTH DOWELS AT 18" ON CENTER MAY BE SUBSTITUTED FOR THE CONTINUOUS KEY

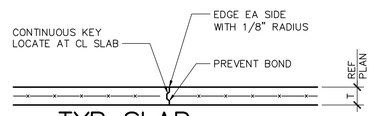

2 TYP SLAB CONSTRUCTION JOINT
NTS

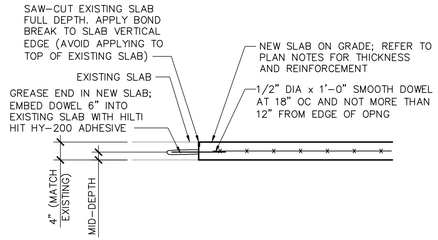

3 SLAB DOWEL DETAIL
NTS

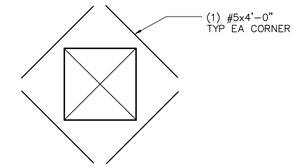

4 TYP SLAB OPENING REINFORCING
NTS

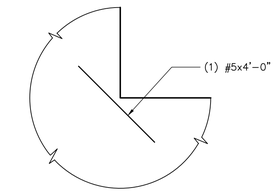

5 TYP RE-ENTRANT CORNER
NTS

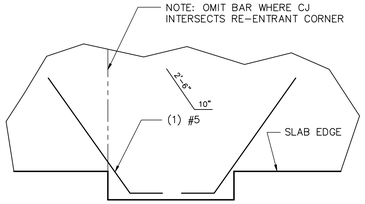

6 TYP SLAB REINFORCEMENT
NTS

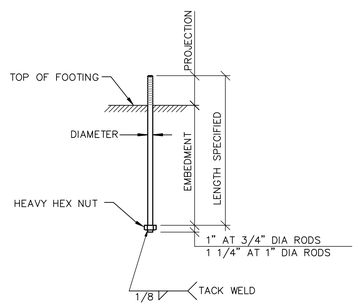

7 ANCHOR ROD DIAGRAM
NTS

NOTE:
THE GENERAL CONTRACTOR SHALL COORDINATE ALL UTILITY LOCATIONS AND ELEVATIONS PRIOR TO PLACEMENT OF FOUNDATIONS.

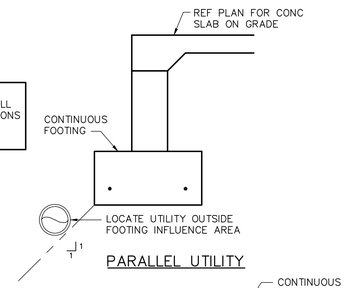

PARALLEL UTILITY

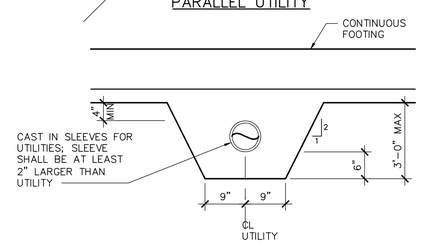

PERPENDICULAR UTILITY

8 UTILITY AT CONTINUOUS FOUNDATIONS
NTS

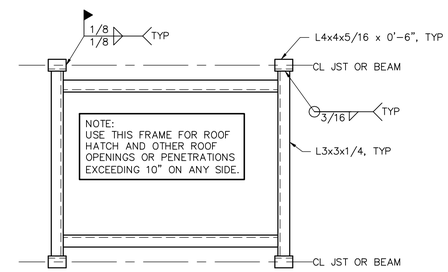

9 ROOF PENETRATION FRAME
NO SCALE

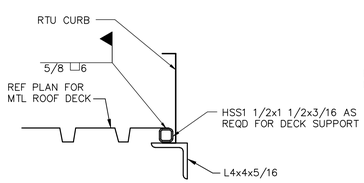

SECTION 10A
NTS

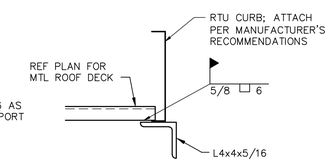

SECTION 10B
NTS

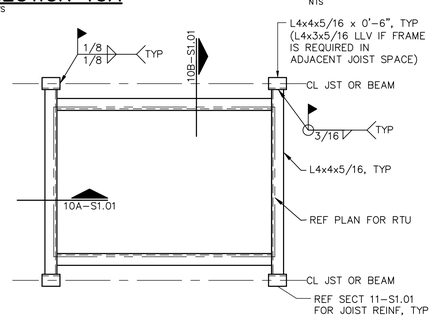

10 RTU FRAMING PLAN
NTS

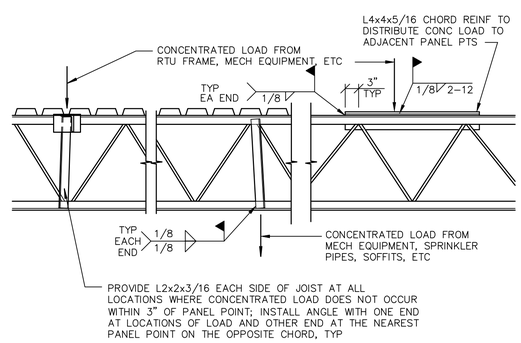

11 TYP JOIST REINFORCING AT CONCENTRATED LOADS
NTS

JOHNSTON BURKHOLDER ASSOCIATES
consulting structural engineers
930 CENTRAL · KANSAS CITY, MO 64105
(816) 421-4200 · WWW.JBAENGR.COM
JBA – #18290 – CMP

PHASE II ADDITION TO:
THE SUMMIT
3381 NW CHIPMAN ROAD
LEE'S SUMMIT, MO 64081

PROJECT #: 15-678
ISSUE DATE: 02/05/2020
DRAWN BY: CMP
CHECKED BY: BJH
REVISIONS:

SHEET No.
S1.01
GENERAL DETAILS

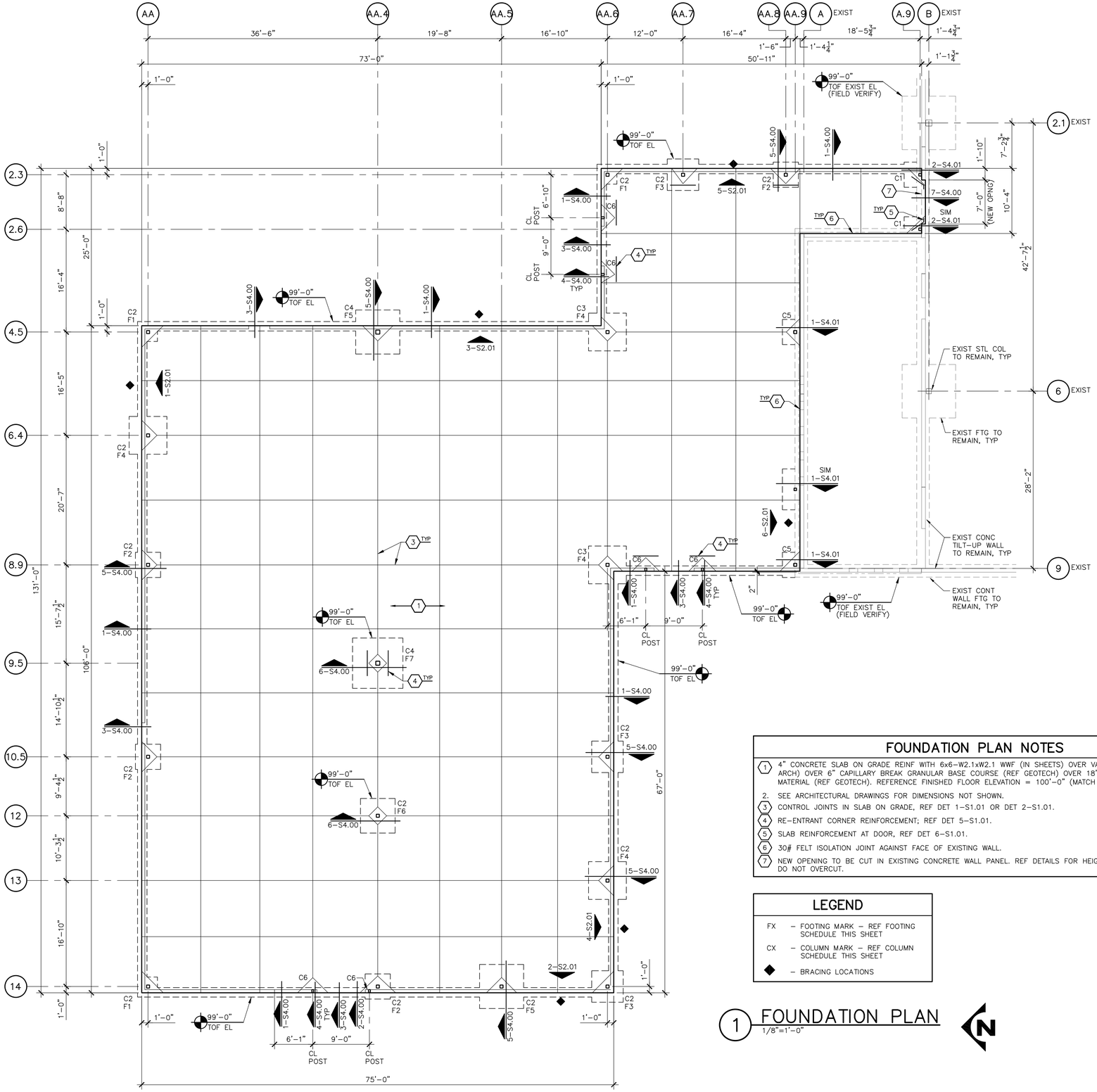

STEEL COLUMN SCHEDULE

MARK	COLUMN SIZE	BASE PLATE *	ANCHOR RODS (7-S1.01)
C1	HSS5x5x1/4	REF 2-S4.01	REF 2-S4.01
C2	HSS6x6x1/4	3/4"x12"x1'-0" *	(4) 3/4" DIA x 1'-4" (PROJ 5")
C3	HSS6x6x5/16	3/4"x12"x1'-0" *	(4) 3/4" DIA x 1'-4" (PROJ 5")
C4	HSS8x8x5/16	3/4"x14"x1'-2" *	(4) 3/4" DIA x 1'-4" (PROJ 5")
C5	HSS6x6x1/4	3/4"x12"x1'-0"	REF 1-S4.01
C6	HSS6x4x1/4	REF 4-S4.00	REF 4-S4.00

* REFER TO BRACING DETAILS FOR ADDITIONAL BASE PLATE AND ANCHORAGE REQUIREMENTS AT BRACED FRAMES.

FOOTING SCHEDULE

MARK	FOOTING SIZE (WxLxT)	TOP REINF	BOTTOM REINF
F1	3'-0"x3'-0"x2'-6"	(4) #5 EW	(4) #5 EW
F2	4'-0"x4'-0"x2'-6"	(5) #5 EW	(5) #5 EW
F3	5'-0"x5'-0"x2'-6"	(7) #5 EW	(7) #5 EW
F4	6'-0"x6'-0"x2'-6"	(8) #5 EW	(8) #5 EW
F5	7'-0"x7'-0"x2'-6"	(9) #5 EW	(9) #5 EW
F6	5'-6"x5'-6"x1'-3"	(6) #5 EW	(6) #5 EW
F7	8'-0"x8'-0"x2'-0"	(9) #5 EW	(9) #5 EW

EW = EACH WAY

FOUNDATION PLAN NOTES

1. 4" CONCRETE SLAB ON GRADE REINF WITH 6x6-W2.1xW2.1 WWF (IN SHEETS) OVER VAPOR BARRIER (REF ARCH) OVER 6" CAPILLARY BREAK GRANULAR BASE COURSE (REF GEOTECH) OVER 18" LOW VOLUME CHANGE MATERIAL (REF GEOTECH). REFERENCE FINISHED FLOOR ELEVATION = 100'-0" (MATCH EXISTING).
2. SEE ARCHITECTURAL DRAWINGS FOR DIMENSIONS NOT SHOWN.
3. CONTROL JOINTS IN SLAB ON GRADE, REF DET 1-S1.01 OR DET 2-S1.01.
4. RE-ENTRANT CORNER REINFORCEMENT; REF DET 5-S1.01.
5. SLAB REINFORCEMENT AT DOOR, REF DET 6-S1.01.
6. 30# FELT ISOLATION JOINT AGAINST FACE OF EXISTING WALL.
7. NEW OPENING TO BE CUT IN EXISTING CONCRETE WALL PANEL. REF DETAILS FOR HEIGHT OF NEW OPENING, DO NOT OVERCUT.

LEGEND

FX – FOOTING MARK – REF FOOTING SCHEDULE THIS SHEET

CX – COLUMN MARK – REF COLUMN SCHEDULE THIS SHEET

◆ – BRACING LOCATIONS

1 FOUNDATION PLAN
1/8"=1'-0"

JOHNSTON BURKHOLDER ASSOCIATES
consulting structural engineers
930 CENTRAL · KANSAS CITY, MO 64105
(816) 421-4200 · WWW.JBAENGR.COM
JBA – #18290 – CMP

PHASE II ADDITION TO:
THE SUMMIT
3381 NW CHIPMAN ROAD
LEE'S SUMMIT, MO 64081

PROJECT #: 15-678
ISSUE DATE: 02/05/2020
DRAWN BY: CMP
CHECKED BY: BJH
REVISIONS:

SHEET No.
S2.00
FOUNDATION PLAN

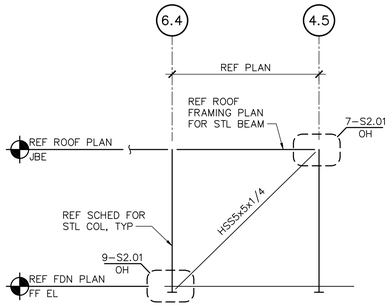

1 GRID AA BRACE ELEVATION
NTS

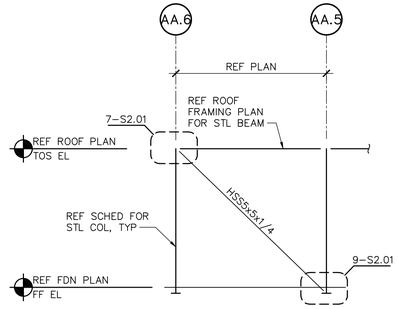

2 GRID 14 BRACE ELEVATION
NTS

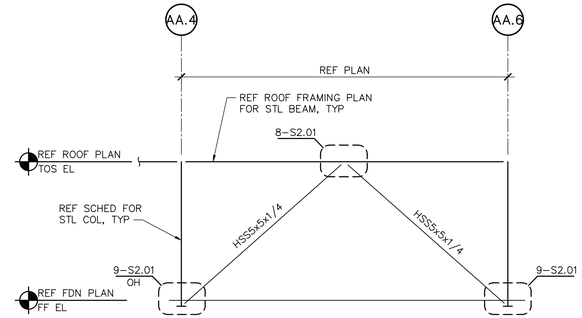

3 GRID 4.5 BRACE ELEVATION
NTS

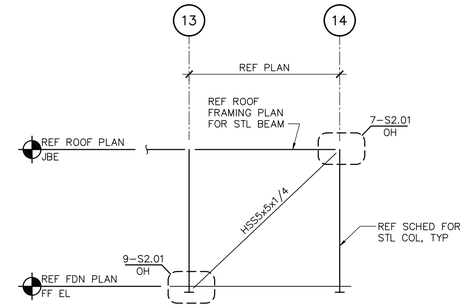

4 GRID AA.6 BRACE ELEVATION
NTS

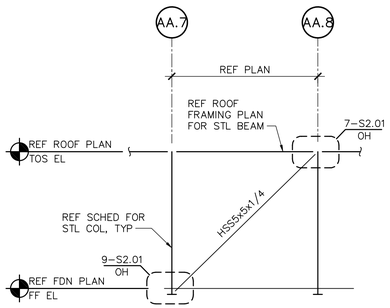

5 GRID 2.3 BRACE ELEVATION
NTS

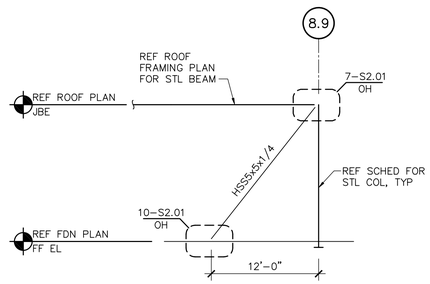

6 GRID AA.9 BRACE ELEVATION
NTS

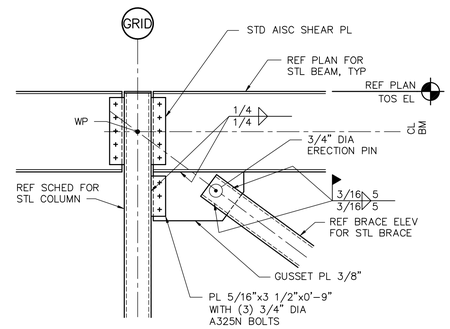

7 BRACE CONNECTION
3/4"=1'–0"

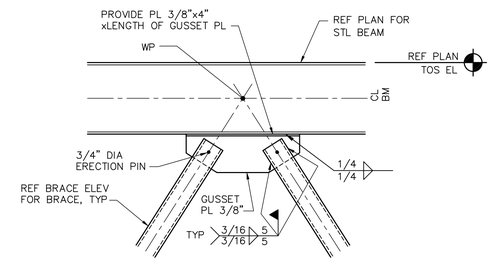

8 BRACE CONNECTION
3/4"=1'–0"

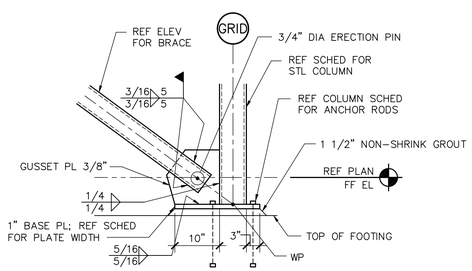

9 BRACE CONNECTION
3/4"=1'–0"

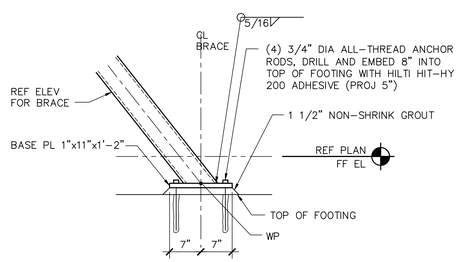

10 BRACE CONNECTION
3/4"=1'–0"

JOHNSTON BURKHOLDER ASSOCIATES
consulting structural engineers
930 CENTRAL · KANSAS CITY, MO 64105
(816) 421-4200 · WWW.JBAENGR.COM
JBA – #18290 – CMP

PHASE II ADDITION TO:
THE SUMMIT
3381 NW CHIPMAN ROAD
LEE'S SUMMIT, MO 64081

PROJECT #: 15-678
ISSUE DATE: 02/05/2020
DRAWN BY: CMP
CHECKED BY: BJH
REVISIONS:

SHEET No.
S2.01
BRACE ELEVATIONS

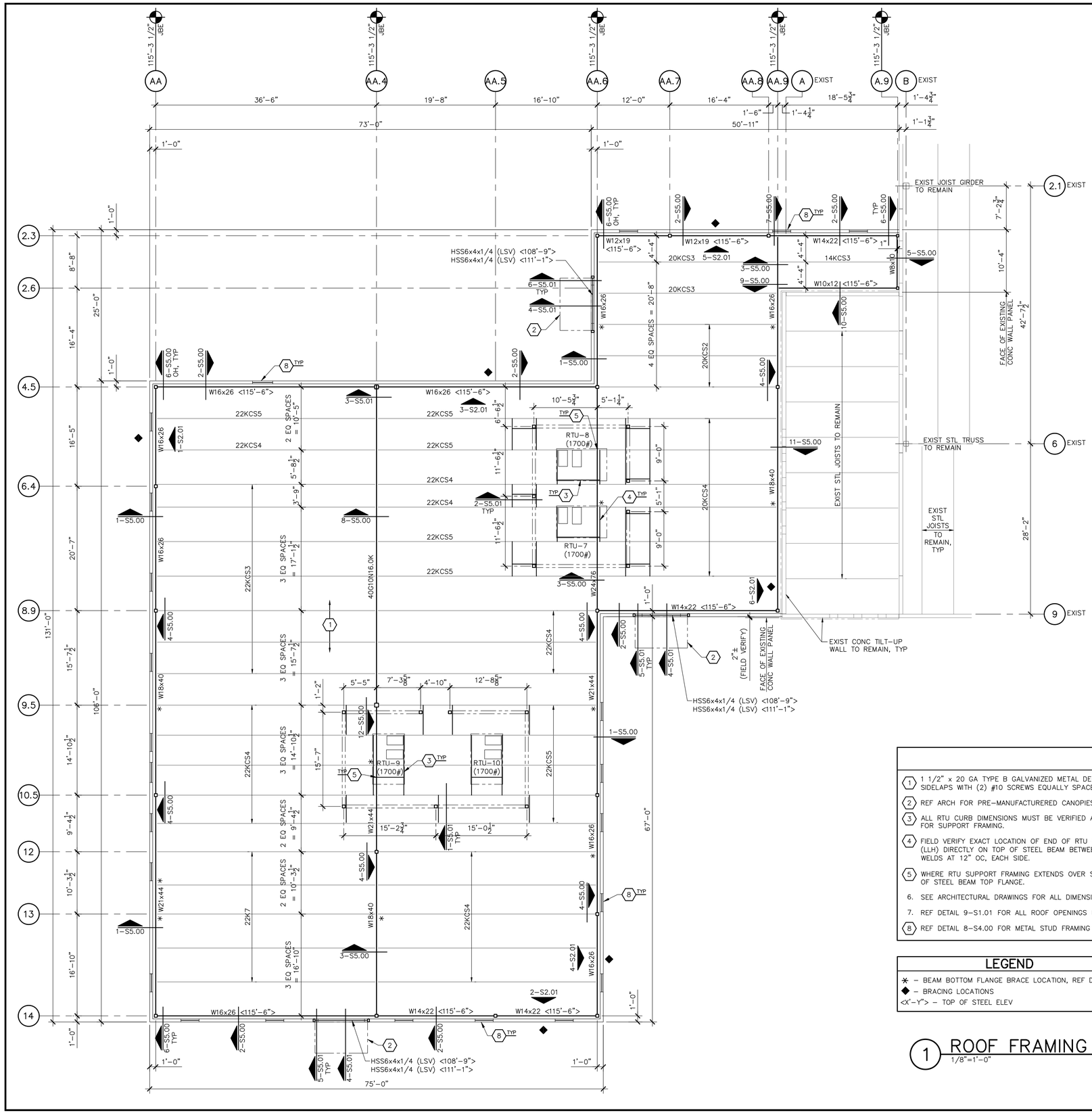

ROOF FRAMING PLAN NOTES

1. 1 1/2" x 20 GA TYPE B GALVANIZED METAL DECK. FASTEN DECK TO SUPPORTS WITH 5/8" DIA PUDDLE WELDS IN A 36/7 WELD PATTERN. FASTEN SIDELAPS WITH (2) #10 SCREWS EQUALLY SPACED BETWEEN JOISTS, UNO. REFER TO ARCHITECTURAL DRAWINGS FOR ELASTIZELL INSULATING TOPPING.
2. REF ARCH FOR PRE-MANUFACTURERED CANOPIES.
3. ALL RTU CURB DIMENSIONS MUST BE VERIFIED AND COORDINATED WITH UNIT SUPPLIER BY CONTRACTOR PRIOR TO FABRICATING STEEL. REF 10-S1.01 FOR SUPPORT FRAMING.
4. FIELD VERIFY EXACT LOCATION OF END OF RTU CURB. IF END OF CURB OCCURS DIRECTLY OVER STEEL BEAM GIRDER, PROVIDE HSS4x2 1/2x1/4 (LLH) DIRECTLY ON TOP OF STEEL BEAM BETWEEN JOIST END SEATS. STITCH WELD TO TOP FLANGE OF STEEL BEAM WITH 2" LONG FLARE-BEVEL WELDS AT 12" OC, EACH SIDE.
5. WHERE RTU SUPPORT FRAMING EXTENDS OVER STEEL BEAM GIRDERS, VERTICAL LEG OF RTU SUPPORT FRAME MAY BE COPPED TO 2 1/2" FOR WIDTH OF STEEL BEAM TOP FLANGE.
6. SEE ARCHITECTURAL DRAWINGS FOR ALL DIMENSIONS NOT SHOWN.
7. REF DETAIL 9-S1.01 FOR ALL ROOF OPENINGS LARGER THAN 10"X10"; INCLUDING, BUT NOT LIMITED TO, ROOF DRAINS AND EXHAUST FANS.
8. REF DETAIL 8-S4.00 FOR METAL STUD FRAMING AT OPENINGS IN EXTERIOR WALLS.

LEGEND

✳ – BEAM BOTTOM FLANGE BRACE LOCATION, REF DETAILS
◆ – BRACING LOCATIONS
<X'-Y"> – TOP OF STEEL ELEV

1 ROOF FRAMING PLAN
1/8"=1'-0"

JBA JOHNSTON BURKHOLDER ASSOCIATES
consulting structural engineers
930 CENTRAL · KANSAS CITY, MO 64105
(816) 421-4200 · WWW.JBAENGR.COM
JBA – #18290 – CMP

PHASE II ADDITION TO:
THE SUMMIT
3381 NW CHIPMAN ROAD
LEE'S SUMMIT, MO 64081

PROJECT #: 15-678
ISSUE DATE: 02/05/2020
DRAWN BY: CMP
CHECKED BY: BJH
REVISIONS:

SHEET No.
S3.00
ROOF FRAMING PLAN

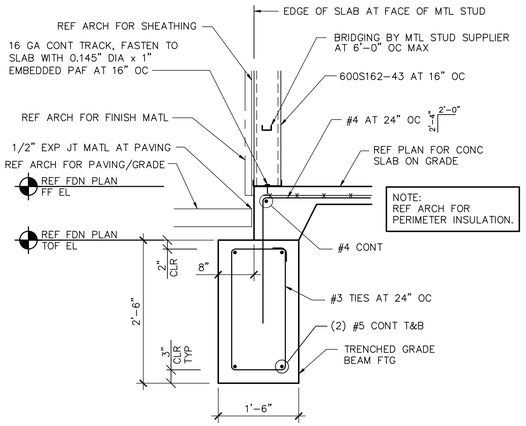

1 TYP PERIMETER FOOTING
3/4"=1'-0"

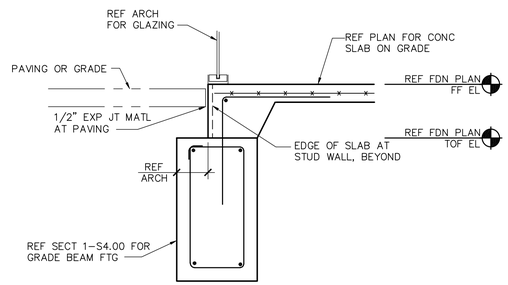

2 SLAB AT GLAZING
3/4"=1'-0"

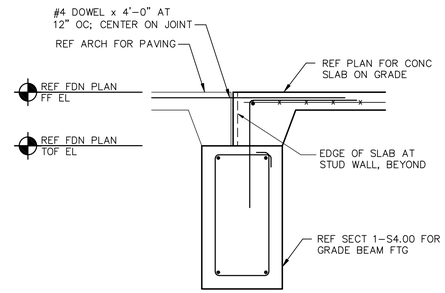

3 SLAB AT DOOR
3/4"=1'-0"

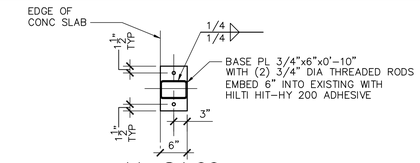

4A-S4.00

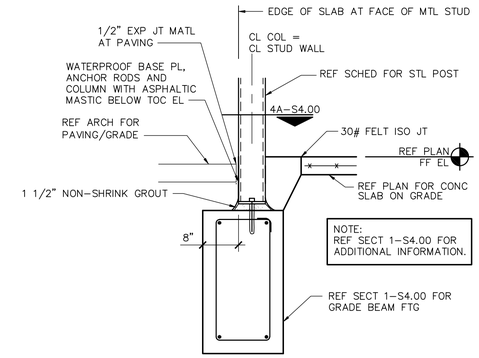

4 COL AT PERIMETER FOOTING
3/4"=1'-0"

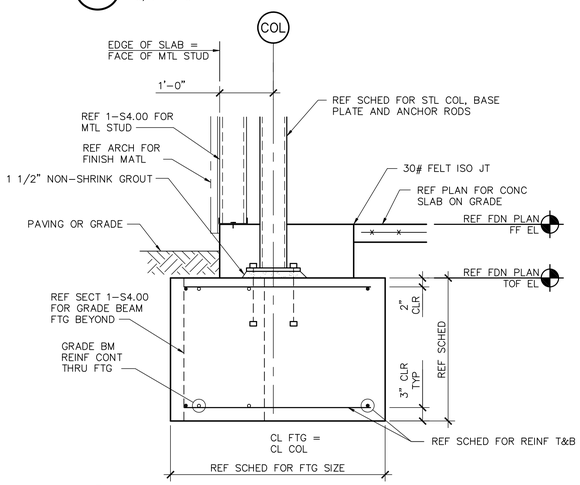

5 PERIMETER COLUMN FOOTING
3/4"=1'-0"

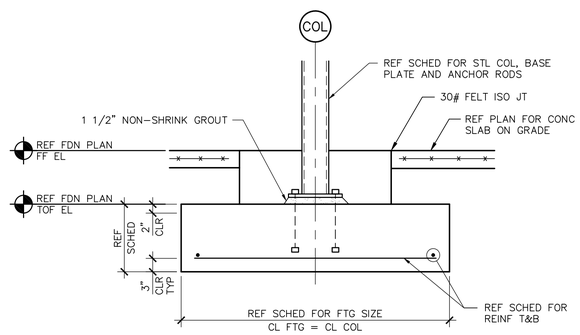

6 INTERIOR COLUMN FOOTING
3/4" = 1'-0"

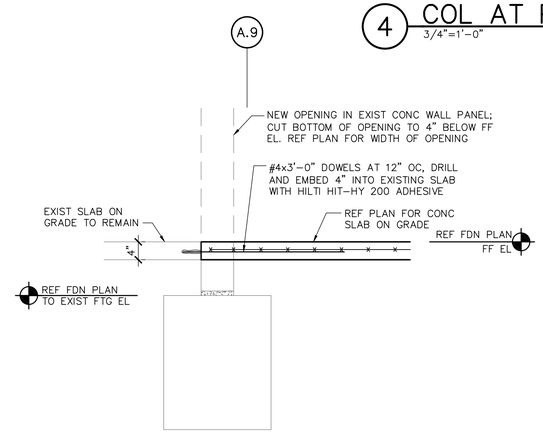

7 SLAB AT NEW OPNG IN EXIST WALL
3/4"=1'-0"

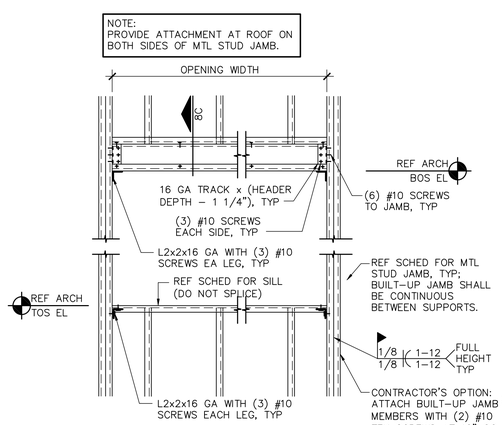

8A WINDOW OPENING
NTS

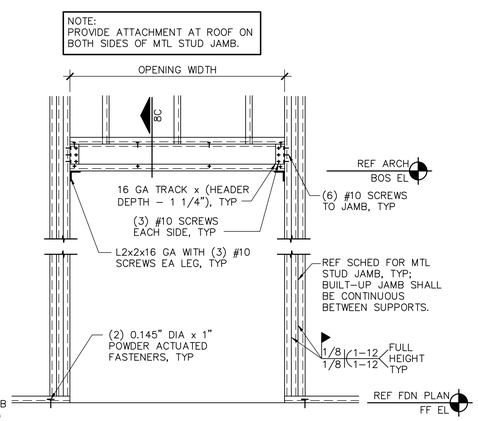

8B DOOR OPENING
NTS

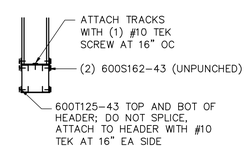

8C HEADER SECTION
NTS

PERIMETER WALL OPENING SCHEDULE

WALL	MAX WIDTH	JAMB	SILL
6"	3'-4"	(2) 600S162-43	600T125-43
6"	7'-8"	(3) 600S162-43	---

8 PERIMETER WALL FRAMED OPENINGS
NTS

JOHNSTON BURKHOLDER ASSOCIATES
consulting structural engineers
930 CENTRAL · KANSAS CITY, MO 64105
(816) 421-4200 · WWW.JBAENGR.COM
JBA - #18290 - CMP

PHASE II ADDITION TO:
THE SUMMIT
3381 NW CHIPMAN ROAD
LEE'S SUMMIT, MO 64081

PROJECT #: 15-678
ISSUE DATE: 02/05/2020
DRAWN BY: CMP
CHECKED BY: BJH
REVISIONS:

SHEET No.
S4.00
FOUNDATION DETAILS

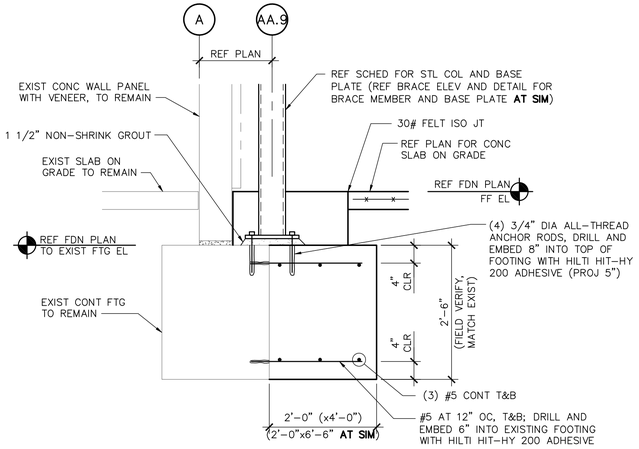

1 COL FOOTING AT EXIST WALL
3/4"=1'-0"

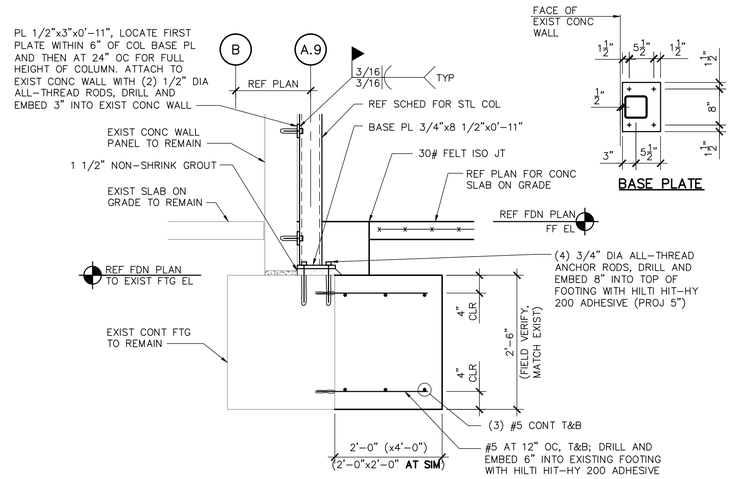

2 COL FOOTING AT EXIST WALL
3/4"=1'-0"

JBA JOHNSTON BURKHOLDER ASSOCIATES
consulting structural engineers
930 CENTRAL · KANSAS CITY, MO 64105
(816) 421-4200 · WWW.JBAENGR.COM
JBA – #18290 – CMP

PHASE II ADDITION TO:
THE SUMMIT
3381 NW CHIPMAN ROAD
LEE'S SUMMIT, MO 64081

PROJECT #: 15-678
ISSUE DATE: 02/05/2020
DRAWN BY: CMP
CHECKED BY: BJH
REVISIONS:

SHEET No.
S4.01
FOUNDATION DETAILS

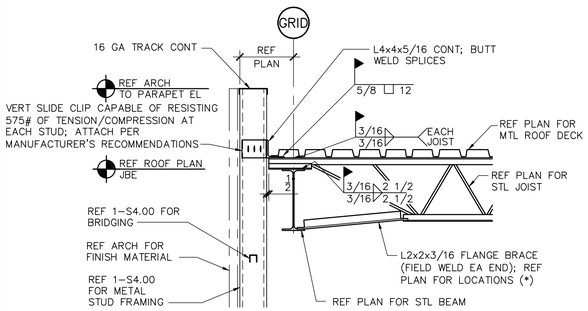

1 JOIST BEARING SECTION
3/4"=1'-0"

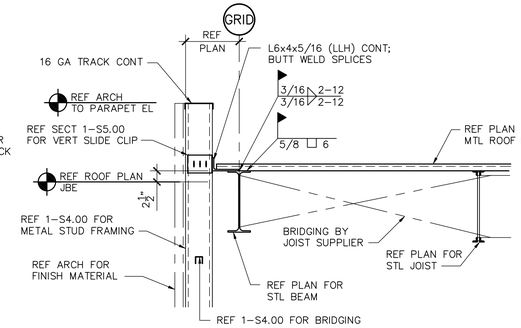

2 DECK BEARING SECTION
3/4"=1'-0"

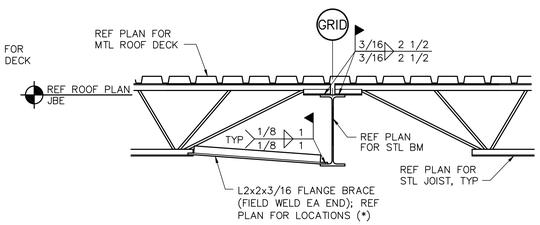

3 TYPICAL ROOF JOIST BEARING
3/4"=1'-0"

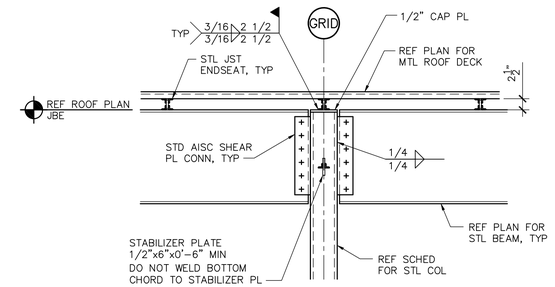

4 BEAM TO COLUMN CONNECTION
3/4"=1'-0"

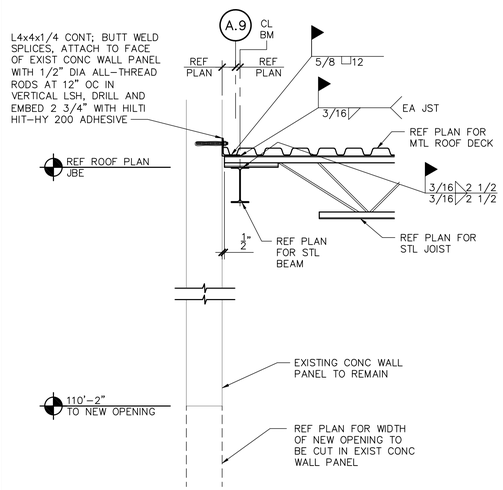

5 JOIST BEARING AT EXIST WALL
3/4"=1'-0"

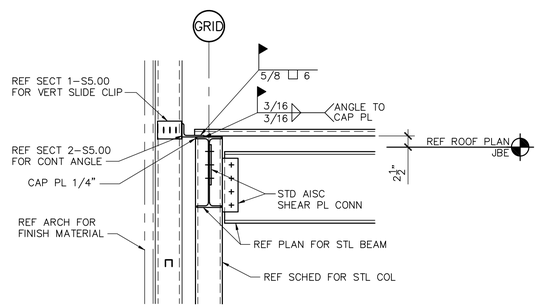

6 PERIMETER BEAM TO COLUMN CONNECTION
3/4"=1'-0"

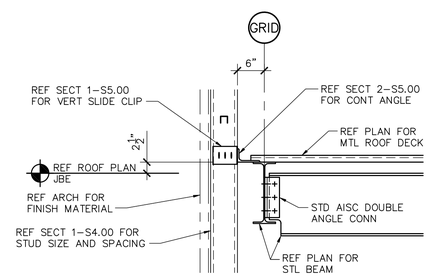

7 BEAM CONNECTION AT ROOF
3/4"=1'-0"

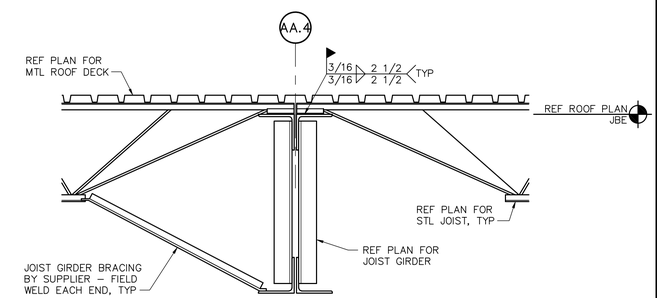

8 JOIST BEARING AT JOIST GIRDER
3/4"=1'-0"

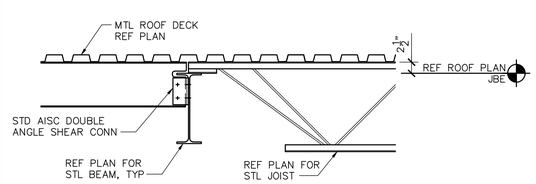

9 BEAM TO BEAM CONNECTION
3/4"=1'-0"

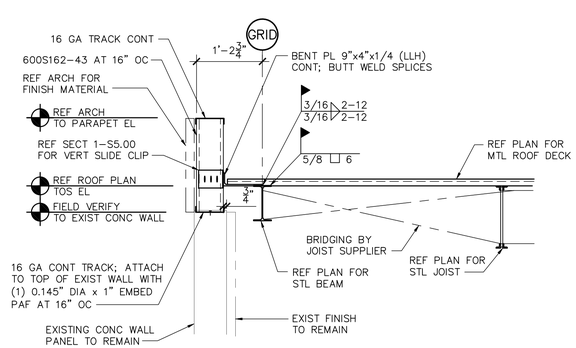

10 DECK BEARING SECTION
3/4"=1'-0"

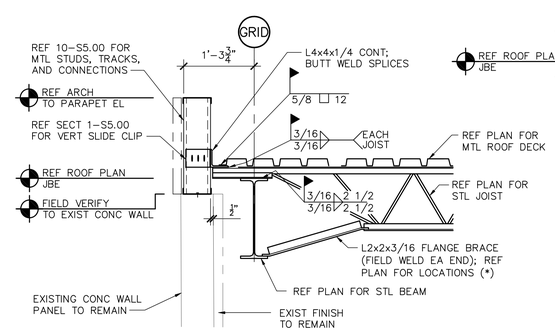

11 JOIST BEARING SECTION
3/4"=1'-0"

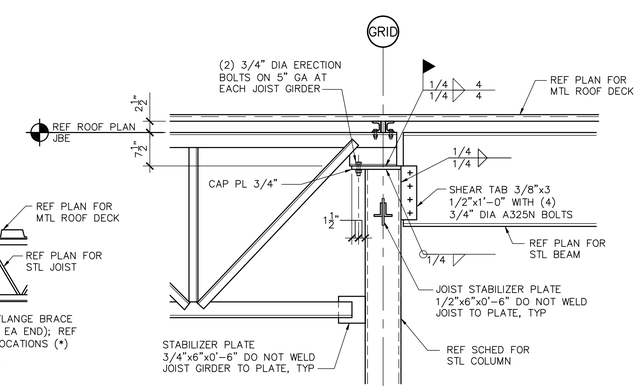

12 JOIST GIRDER/BEAM AT COLUMN
3/4"=1'-0"

JBA JOHNSTON BURKHOLDER ASSOCIATES
consulting structural engineers
930 CENTRAL · KANSAS CITY, MO 64105
(816) 421-4200 · WWW.JBAENGR.COM
JBA - #18290 - CMP

PHASE II ADDITION TO:
THE SUMMIT
3381 NW CHIPMAN ROAD
LEE'S SUMMIT, MO 64081

PROJECT #: 15-678
ISSUE DATE: 02/05/2020
DRAWN BY: CMP
CHECKED BY: BJH
REVISIONS:

SHEET No.
S5.00
ROOF FRAMING DETAILS

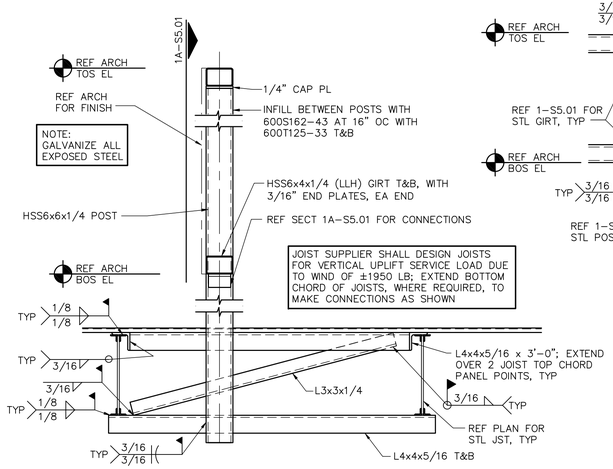

1 RTU SCREEN AT JOISTS
3/4" = 1'–0"

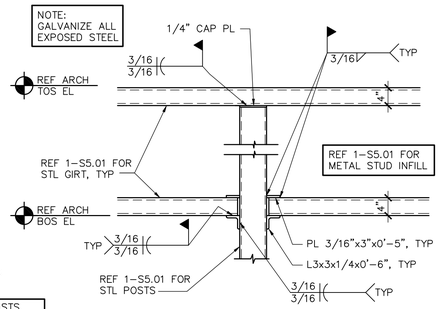

1A–S5.01

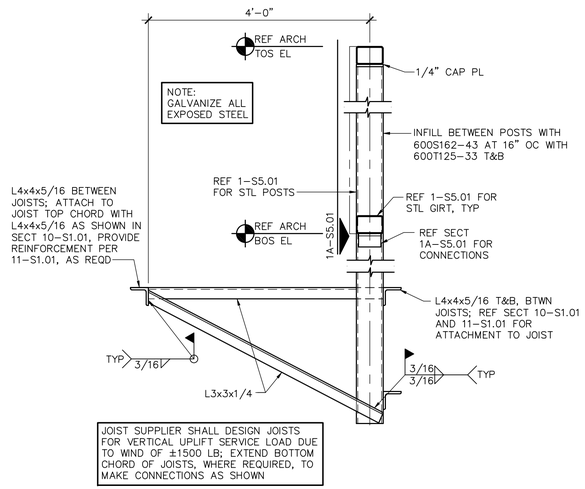

2 RTU SCREEN CONN DETAIL
3/4" = 1'–0"

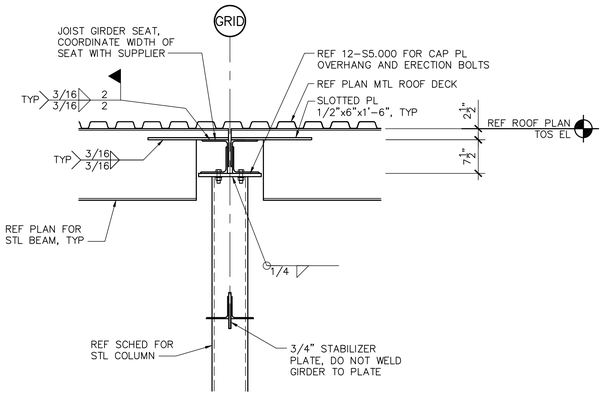

3 JOIST GIRDER/BEAM AT COLUMN
3/4"=1'–0"

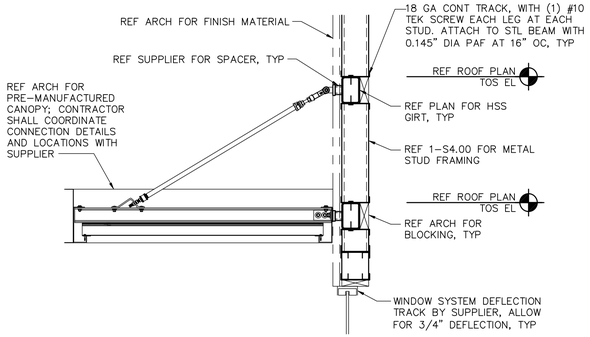

4 CANOPY SUPPORT GIRTS
3/4"=1'–0"

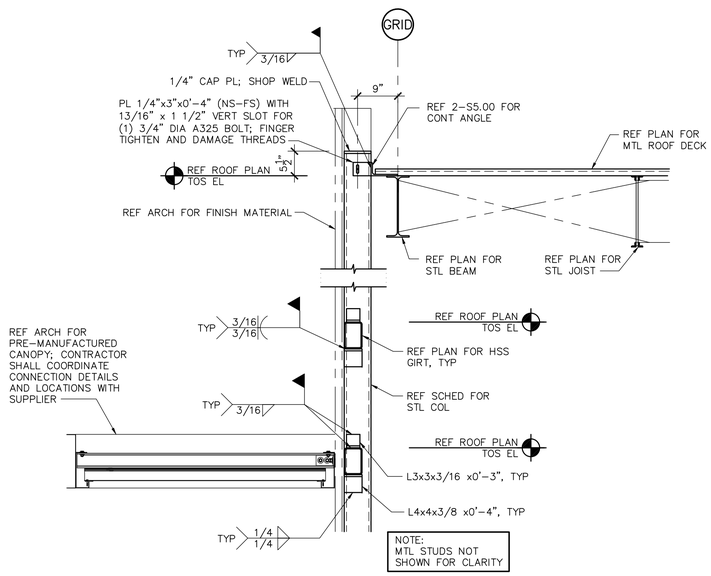

5 CANOPY GIRT TO COL CONN
3/4"=1'–0"

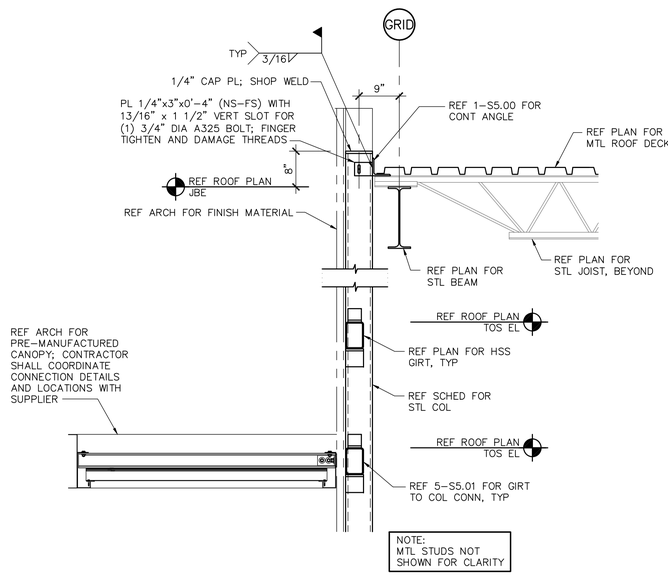

6 CANOPY GIRT TO COL CONN
3/4"=1'–0"

JOHNSTON BURKHOLDER ASSOCIATES
consulting structural engineers
930 Central · Kansas City, Mo 64105
(816) 421-4200 · www.jbaengr.com
JBA – #18290 – CMP

PHASE II ADDITION TO:
THE SUMMIT
3381 NW CHIPMAN ROAD
LEE'S SUMMIT, MO 64081

PROJECT #: 15-678
ISSUE DATE: 02/05/2020
DRAWN BY: CMP
CHECKED BY: BJH
REVISIONS:

SHEET No.
S5.01
ROOF FRAMING DETAILS

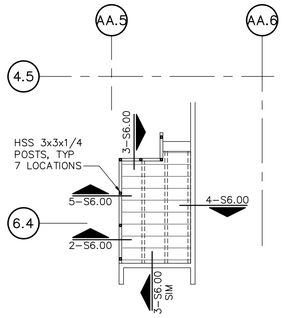

NOTE:
REF ARCH DWGS FOR DIMENSIONS AND FURTHER INFORMATION.

1 PLATFORM FRAMING AT SOUND BOOTH
1/8"=1'-0"

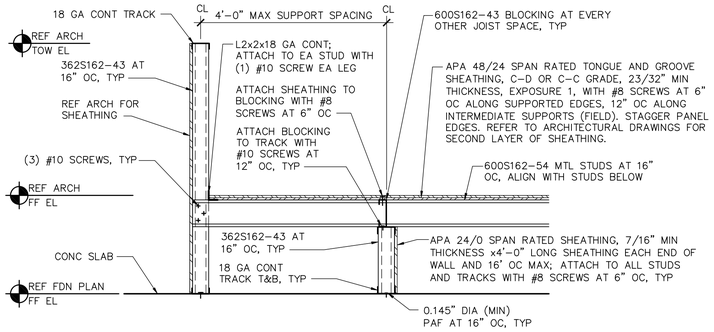

2 PLATFORM EDGE FRAMING
3/4"=1'-0"

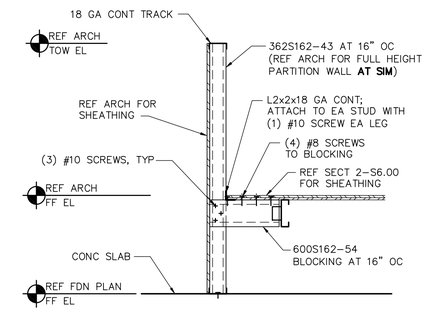

3 PLATFORM EDGE FRAMING
3/4"=1'-0"

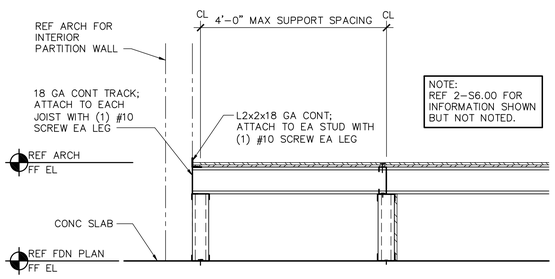

NOTE:
REF 2-S6.00 FOR INFORMATION SHOWN BUT NOT NOTED.

4 PLATFORM EDGE FRAMING
3/4"=1'-0"

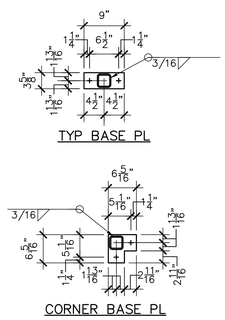

TYP BASE PL

CORNER BASE PL

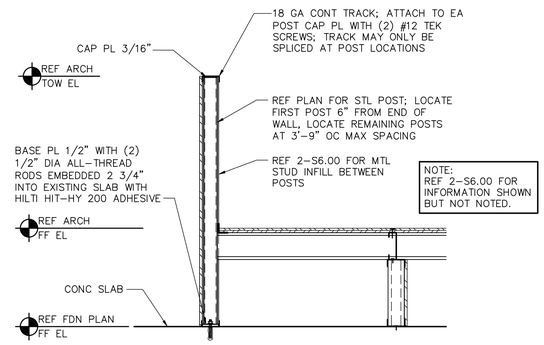

NOTE:
REF 2-S6.00 FOR INFORMATION SHOWN BUT NOT NOTED.

5 POSTS AT PLATFORM WALL
3/4"=1'-0"

JOHNSTON BURKHOLDER ASSOCIATES
consulting structural engineers
930 CENTRAL · KANSAS CITY, MO 64105
(816) 421-4200 · WWW.JBAENGR.COM
JBA – #18290 – CMP

PHASE II ADDITION TO:
THE SUMMIT
3381 NW CHIPMAN ROAD
LEE'S SUMMIT, MO 64081

PROJECT #: 15-678
ISSUE DATE: 02/05/2020
DRAWN BY: CMP
CHECKED BY: BJH
REVISIONS:

SHEET No.
S6.00
SOUND BOOTH PLATFORM PLAN AND DETAILS

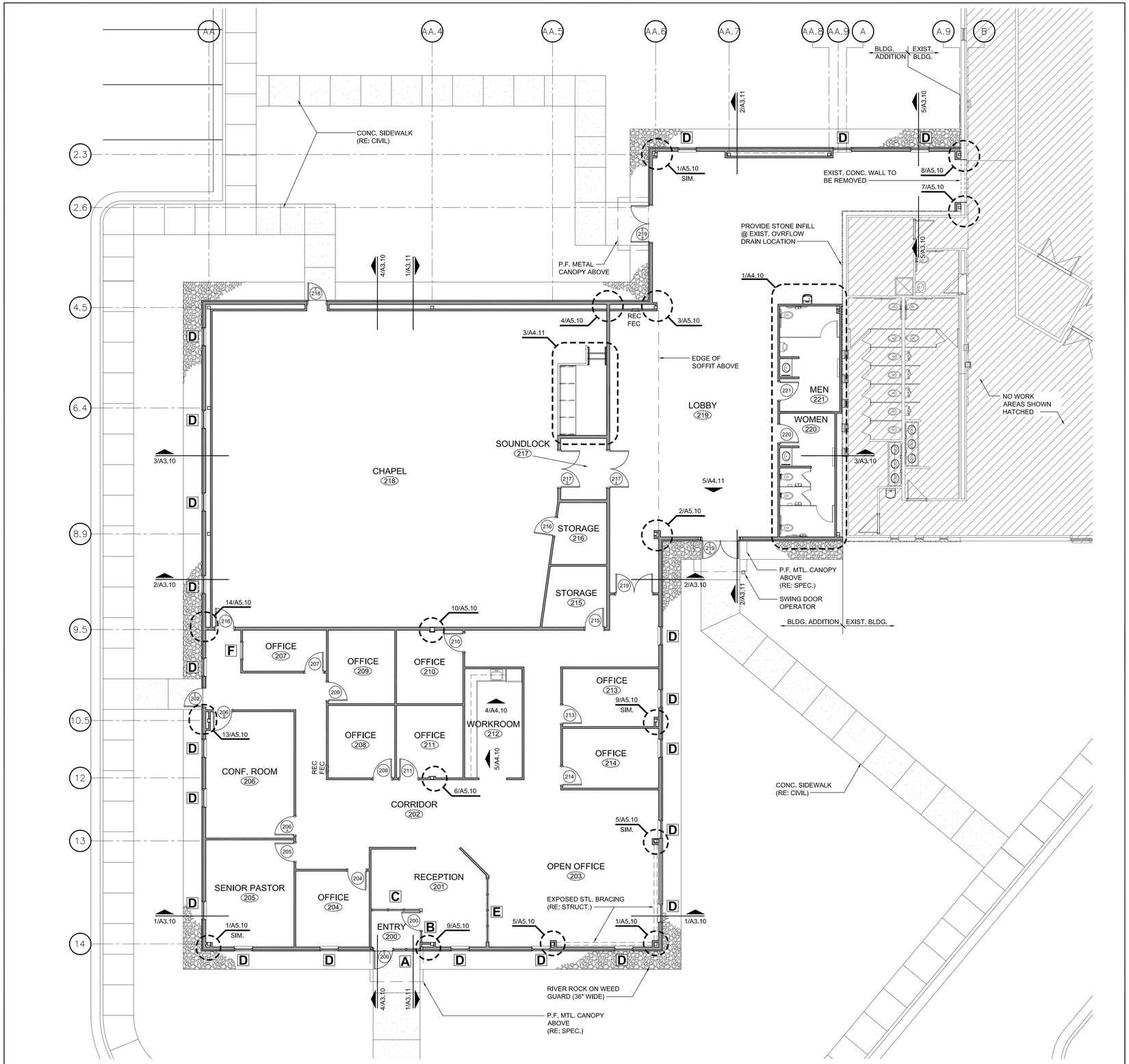

1 A1.10 **FLOOR PLAN**
1/8"=1'-0"

GENERAL FLOOR PLAN NOTES:
1. HOLD BACK SLAB EDGE AT ALL EXTERIOR DOOR LOCATIONS.

STATE OF MISSOURI
NUMBER A-7731
REGISTERED ARCHITECT

2/05/2020

ARCHITECT: DAVID E. EVANS
ARCHITECT LICENSE NO: A-7731

mantel teter
consulting | architecture | developing
929 Walnut Street, Suite 5104 | Kansas City, Missouri 64106
toll-free: 877.215.5600 | www.manteltteter.com

PHASE II ADDITION TO:
THE SUMMIT
3381 NW CHIPMAN ROAD
LEE'S SUMMIT, MO 64081

PROJECT #: 15-678
ISSUE DATE: 2/05/2020
DRAWN BY:
CHECKED BY: BCR
REVISIONS:

SHEET No.
A1.10
FLOOR PLAN

WALL TYPE NOTES

1. ALL STUD WALLS TO BE PLACED @ 1'-4" O.C. UNLESS NOTED OTHERWISE. SEE STRUCTURAL DRAWINGS FOR STUD SPACING OF SPECIFIC WALLS.
2. ALL NON-STRUCTURAL STUD WALLS AND SOFFIT SUPPORTS TO RUN TO THE UNDERSIDE OF DRYWALL CEILING, STRUCTURE OR ROOF DECK ABOVE. STRUCTURAL WALLS SHALL TERMINATE PER STRUCTURAL DRAWINGS.
3. ALL NON-STRUCTURAL INTERIOR STUD WALLS SHALL BE OF APPROPRIATE GAUGE TO SPAN UNBRACED LENGTHS INDICATED ON THE DRAWINGS USING THE STUD WIDTHS INDICATED ON THE FLOOR PLANS AND WALL TYPE SCHEDULE.
4. ALL WOOD BACKING AND BLOCKING SHALL BE FIRE-RETARDANT TREATED WOOD.
5. ALL INTERIOR WALLS SHALL BE INSULATED WITH UNFACED FIBERGLASS BATT INSULATION.
6. KRAFT-FACED BATT INSULATION AT EXPOSED LOCATIONS INCLUDING RETURN AIR PLENUM SPACES & EXTERIOR WALLS SHALL BE CONCEALED BY GYPSUM BOARD OR USE FSK-25 FOIL-FACED BATT INSULATION.
7. ALL WALL TILE AND CEILING TILE LOCATIONS SHALL HAVE TILE BACKING SUBSTRATE.
9. WALLS NOTED AS "ACOUSTICAL WALLS" AND NEW WALLS IN AREAS WITH EXPOSED STRUCTURE CEILINGS SHALL CONTINUE FROM THE FLOOR SLAB TO THE FLOOR/CEILING ASSEMBLY, ROOF/CEILING ASSEMBLY OR ROOF DECK ABOVE.
10. WALLS NOTED AS "ACOUSTICAL WALLS" AND NEW WALLS IN AREAS WITH EXPOSED STRUCTURE CEILINGS SHALL BE SEALED TIGHT ON ALL SIDES TO ADJACENT CONSTRUCTION WITH ACOUSTICAL CAULK. (RE: DETAIL 2/A1.11 FOR ACOUSTICAL WALL TERMINATION DETAILS).
11. EXISTING GYPSUM BOARD WALLS IN AREAS WITH EXPOSED STRUCTURE CEILINGS SHALL BE EXTENDED TO THE FLOOR OR ROOF DECK ABOVE AND SEALED TIGHT TO ADJACENT CONSTRUCTION WITH ACOUSTICAL CAULK.
12. ALL PENETRATIONS THROUGH "ACOUSTICAL WALLS", WALLS IN AREAS WITH EXPOSED STRUCTURE CEILINGS AND WALLS BETWEEN CLASSROOMS SHALL BE STRUCTURALLY INDEPENDENT & SEALED TIGHT WITH APPROVED ACOUSTICAL CAULK INCLUDING ALL TERMINATIONS AND CONNECTION JOINTS
13. PROVIDE 6" SOUND BATT INSULATION ABOVE ACOUSTICAL CEILINGS IN OFFICES, RESTROOMS AND TOILET ROOMS.

WALL TYPE SCHEDULE

1. WALL ASSEMBLIES ARE INDICATED THUS "◇" ON THE PLANS AND SECTIONS HEREIN & DESCRIBED PER THE WALL TYPES BELOW.
2. REFERENCE BUILDING ELEVATIONS, BUILDING SECTIONS, WALLS SECTIONS AND DETAILS FOR EXTERIOR CLADDING REQUIREMENTS.
3. REFERENCE WALL TYPE NOTES FOR ADDITIONAL REQUIREMENTS.

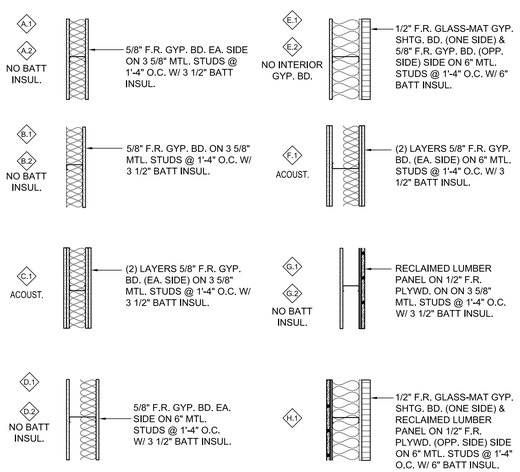

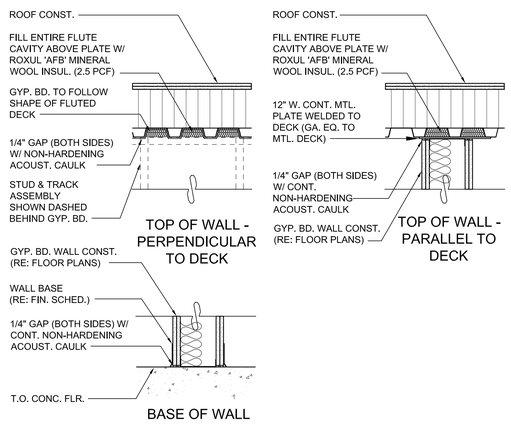

2 / A1.11 **ACOUST. WALL TERMINATION DTLS.**
1" = 1'-0"

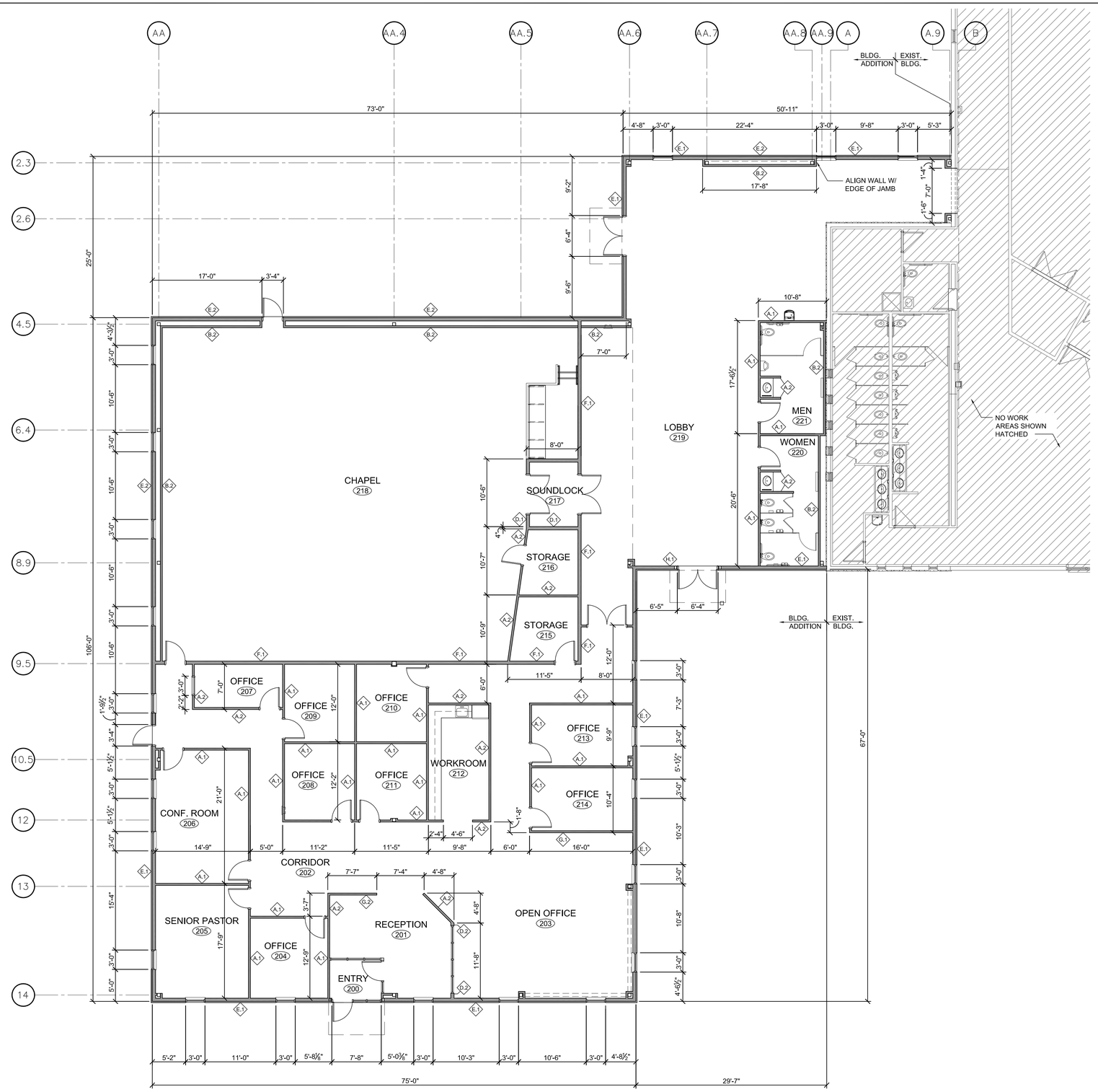

1 / A1.11 **DIMENSION PLAN**
_"=1'-0"

NORTH

STATE OF MISSOURI
NUMBER A-7731
REGISTERED ARCHITECT
2/05/2020

ARCHITECT: DAVID E. EVANS
ARCHITECT LICENSE NO: A-7731

mantel teter
consulting | architecture | developing
929 Walnut Street, Suite 5104 | Kansas City, Missouri 64106
toll-free: 877.215.5600 | www.mantelteter.com

PHASE II ADDITION TO:
THE SUMMIT
3381 NW CHIPMAN ROAD
LEE'S SUMMIT, MO 64081

PROJECT #: 15-678
ISSUE DATE: 2/05/2020
DRAWN BY:
CHECKED BY: BCR
REVISIONS:

SHEET No.
A1.11
DIMENSION PLAN
WALL TYPE SCHEDULE / NOTES

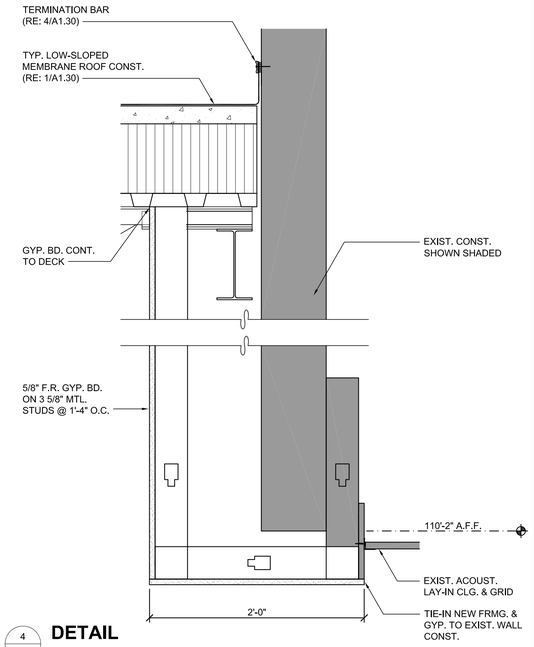

4 A1.20 **DETAIL**
1-1/2" = 1'-0"

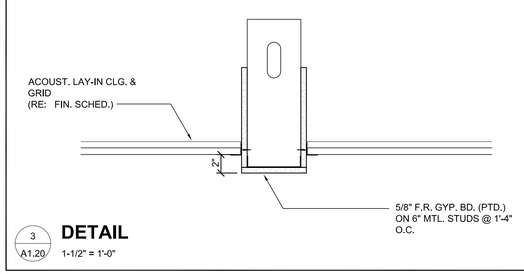

3 A1.20 **DETAIL**
1-1/2" = 1'-0"

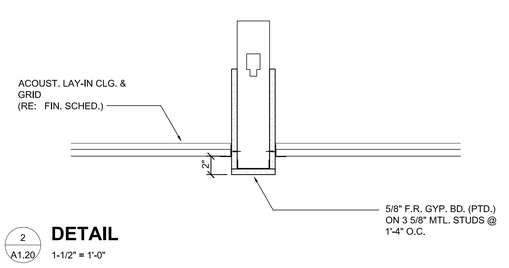

2 A1.20 **DETAIL**
1-1/2" = 1'-0"

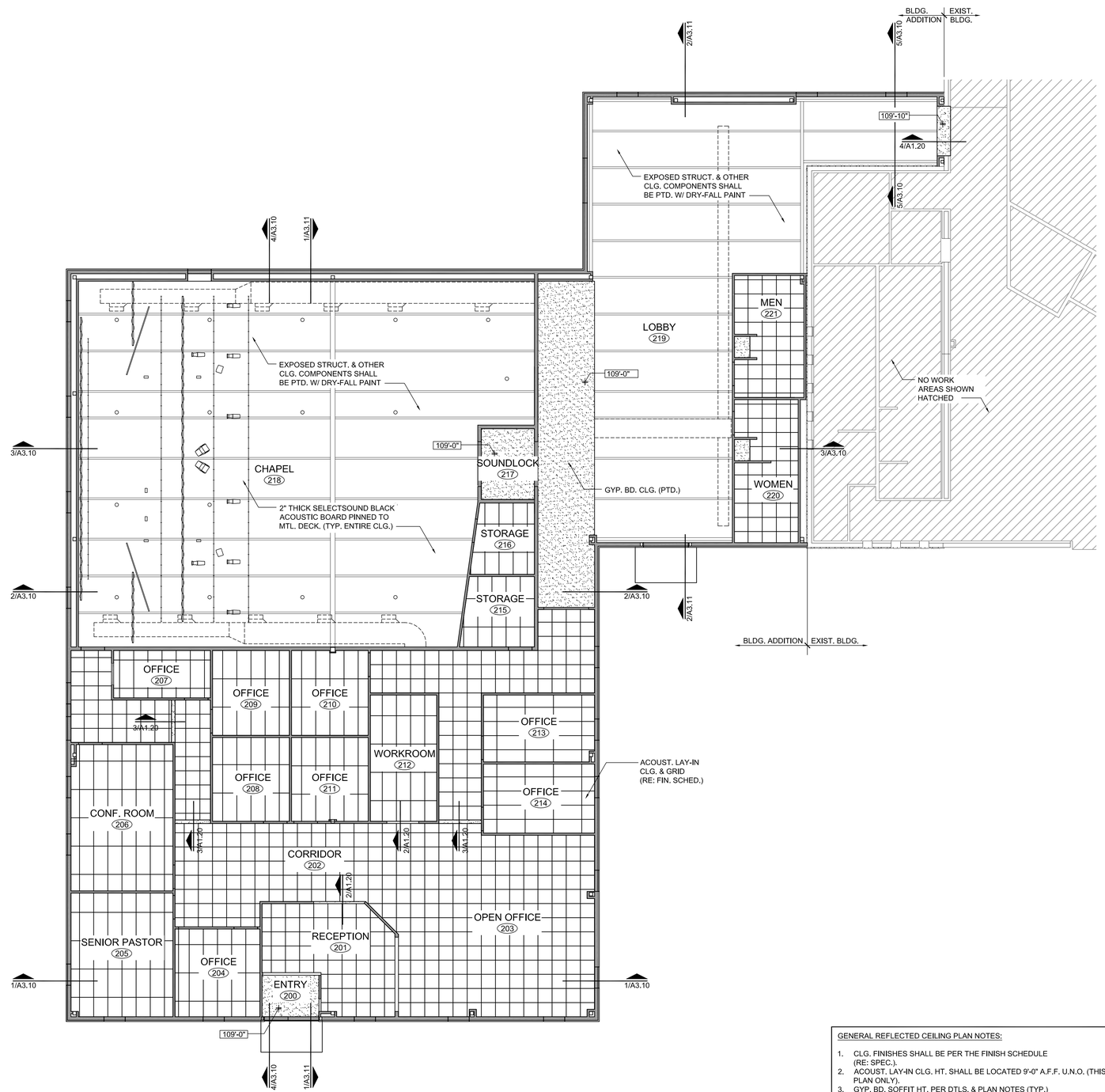

1 A1.20 **REFLECTED CEILING PLAN**
1/8"=1'-0"

NORTH

GENERAL REFLECTED CEILING PLAN NOTES:

1. CLG. FINISHES SHALL BE PER THE FINISH SCHEDULE (RE: SPEC.).
2. ACOUST. LAY-IN CLG. HT. SHALL BE LOCATED 9'-0" A.F.F. U.N.O. (THIS PLAN ONLY).
3. GYP. BD. SOFFIT HT. PER DTLS. & PLAN NOTES (TYP.)
4. EXPOSED STRUCTURE & OTHER COMPONENTS SHALL BE FINISHED PER PLAN NOTES & FINISH SCHEDULE.
5. COORDINATE CEILING LAYOUT WITH MECHANICAL AND ELECTRICAL DRAWINGS. DUCTWORK HAS PRIORITY.
6. LIGHT FIXTURES, HVAC AND AVL COMPONENTS ARE SHOWN FOR REFERENCE ONLY. REFER TO MECH., ELEC. AND ALV DRAWINGS FOR DETAILS & INSTALLATION.
7. SEE FINISH PLANS, BUILDING SECTIONS, REFLECTED CEILING PLANS & SPEC. FOR PAINT INFORMATION NOTED AS P#.
8. WALLS IN ROOMS WITH EXPOSED STRUCTURE SHALL RUN CONTINUOUS TO THE DECK ABOVE.

STATE OF MISSOURI
NUMBER A-7731
REGISTERED ARCHITECT

2/05/2020

ARCHITECT: DAVID E. EVANS
ARCHITECT LICENSE NO: A-7731

mantel teter
consulting | architecture | developing
929 Walnut Street, Suite 5104 | Kansas City, Missouri 64106
toll-free: 877.215.5600 | www.mantelteter.com

PHASE II ADDITION TO:
THE SUMMIT
3381 NW CHIPMAN ROAD
LEE'S SUMMIT, MO 64081

PROJECT #: 15-678
ISSUE DATE: 2/05/2020
DRAWN BY:
CHECKED BY: BCR

REVISIONS:

SHEET No.
A1.20
REFLECTED CEILING PLAN

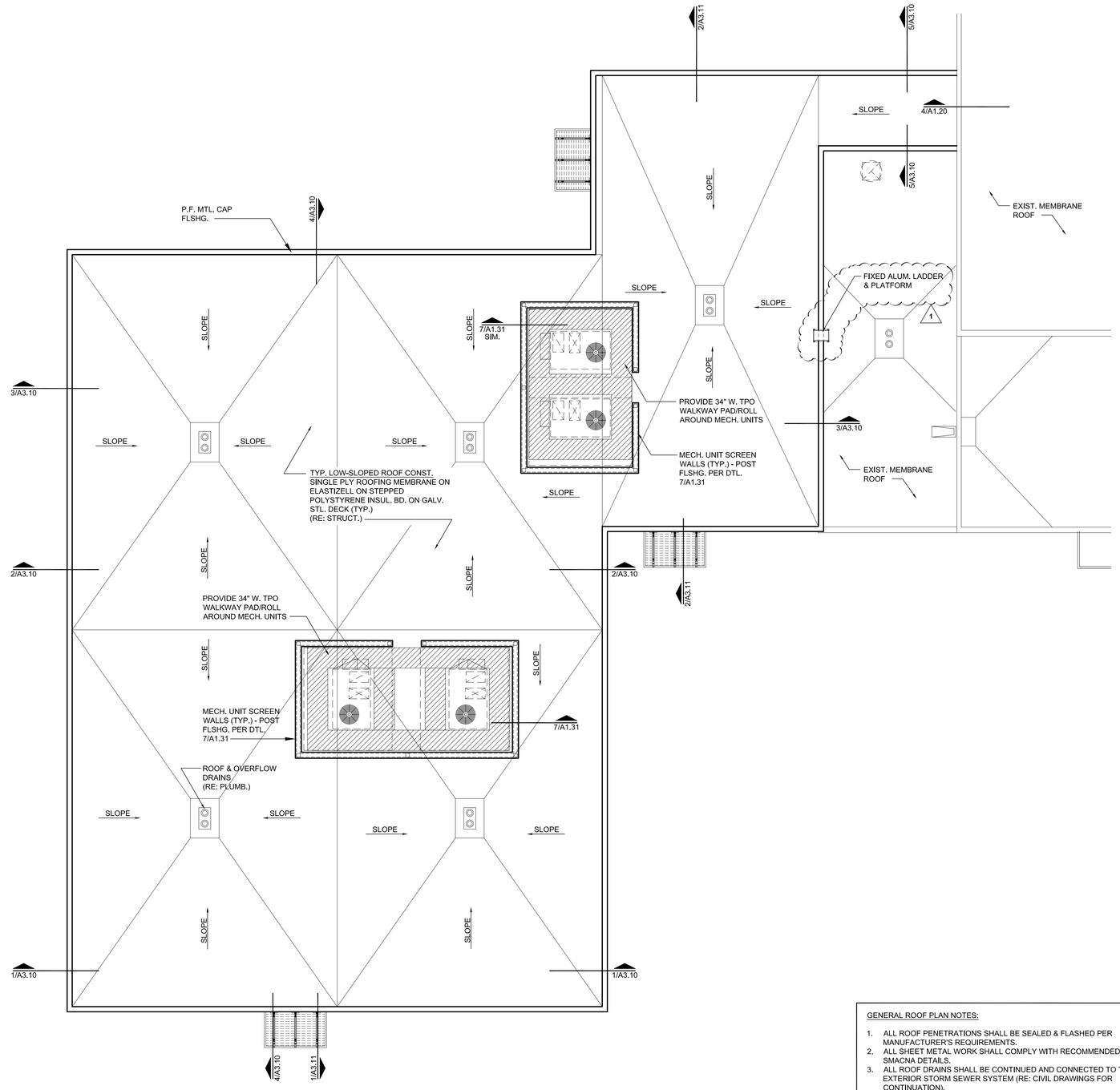

1 A1.30 **ROOF PLAN**
1/8"=1'-0"

NORTH

GENERAL ROOF PLAN NOTES:

1. ALL ROOF PENETRATIONS SHALL BE SEALED & FLASHED PER MANUFACTURER'S REQUIREMENTS.
2. ALL SHEET METAL WORK SHALL COMPLY WITH RECOMMENDED SMACNA DETAILS.
3. ALL ROOF DRAINS SHALL BE CONTINUED AND CONNECTED TO THE EXTERIOR STORM SEWER SYSTEM (RE: CIVIL DRAWINGS FOR CONTINUATION).
4. PROVIDE CONCRETE SPLASHBLOCKS AT ALL WALL HYDRANT LOCATIONS. (RE: PLUMBING)
5. ALL ROOF PENETRATIONS SHALL BE PAINTED TO MATCH THE COLOR OF THE ROOFING MATERIAL THEY PENETRATE. VERIFY COLOR WITH ARCHITECT.
6. REFERENCE DETAIL 1/A1.31 FOR ROOF CURB PACKING REQUIREMENTS AT ROOFTOP MECHANICAL UNIT LOCATIONS..
7. COORDINATE MECHANICAL UNIT SCREENING LOCATIONS WITH MECHANICAL CONTRACTOR TO MAINTAIN REQUIRED SERVICE AND AIRFLOW CLEARANCES.

STATE OF MISSOURI
NUMBER A-7731
REGISTERED ARCHITECT
03/09/20

ARCHITECT: DAVID E. EVANS
ARCHITECT LICENSE NO: A-7731

mantel teter
consulting | architecture | developing
929 Walnut Street, Suite 5104 | Kansas City, Missouri 64106
toll-free: 877.215.5600 | www.manteltteter.com

PHASE II ADDITION TO:
THE SUMMIT
3381 NW CHIPMAN ROAD
LEE'S SUMMIT, MO 64081

PROJECT #: 15-678
ISSUE DATE: 2/05/2020
DRAWN BY:
CHECKED BY: BCR

REVISIONS:
1. 3/09/2020

SHEET No.
A1.30
ROOF PLAN

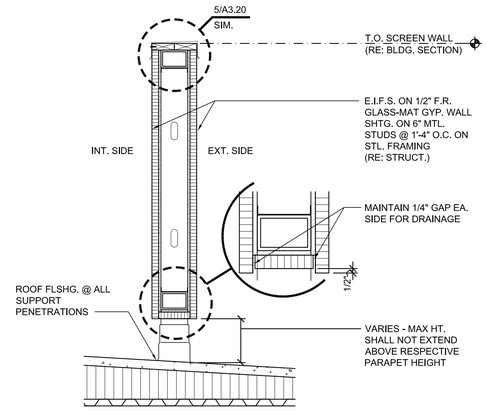

NOTES:
1. SEE BLDG. ELEV. FOR REVEAL JT. LOC. @ EXT. SIDE OF SCREENS.
2. NO REVEALS @ INT. SIDE OF SCREENS

7 A1.31 **DETAIL**
3/4"=1'-0"

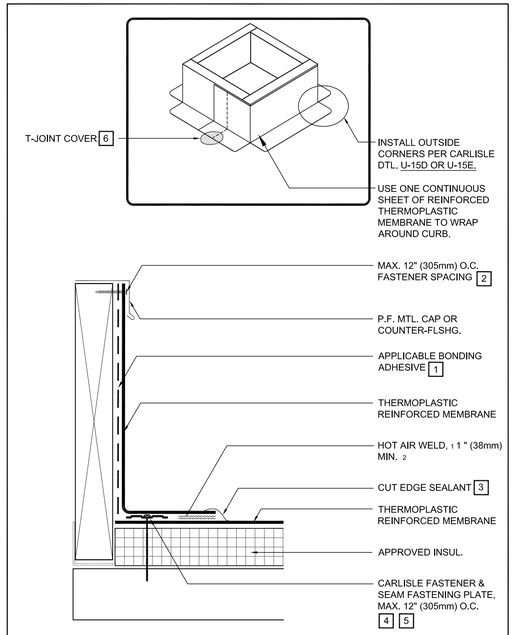

NOTES:

1. WHEN USING TPO MEMBRANE, BONDING ADHESIVE IS NOT REQUIRED WHEN THE FLASHING HEIGHT IS 12" (305mm) OR LESS & THE MEMBRANE IS FASTENED "AS SHOWN" ON TOP OF THE CURB. WHEN CARLISLE TERMINATION BAR IS USED BENEATH THE COUNTER-FLASHING, BONDING ADHESIVE CAN BE ELIMINATED WHEN THE MEMBRANE HEIGHT IS 18" (457mm) OR LESS.
2. WHEN MECHANICAL FASTENERS ARE USED TO PENETRATE THE METAL COUNTER-FLASHING, USE EPDM WASHERS, APPLY WATER CUT-OFF MASTIC UNDER THE COUNTER-FLASHING OR CAULK THE FASTENER HEADS.
3. APPROXIMATELY ⅛" (3mm) DIA. BEAD OF CUT-EDGE SEALANT IS REQD. ON CUT EDGES OF REINFORCED TPO MEMBRANE & RECOMMENDED ON CUT EDGES OF SURE-FLEX PVC MEMBRANE.
4. REFER TO CARLISLE SPECIFICATIONS FOR ACCEPTABLE CARLISLE FASTENER AND PLATE.
5. MECHANICAL SECUREMENT MAY BE INSTALLED INTO THE VERTICAL SUBSTRATE.
6. WHEN USING 60 OR 80 MIL THICK CURB FLASHING, THE INTERSECTIONS BETWEEN SPLICES MUST BE OVERLAID WITH A THERMOPLASTIC "T-JOINT" COVER.
7. FOR ADDITIONAL INFORMATION, REFER TO SPECIFICATIONS

5 A1.31 **DETAIL**
N.T.S.

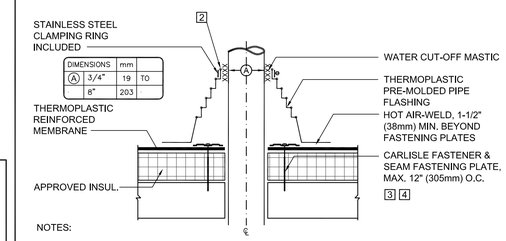

DIMENSIONS		mm	
A	3/4"	19	TO
	8"	203	

NOTES:

1. TEMP. OF THE PIPE PENETRATION MUST NOT EXCEED 140°F (60°C) WHEN USING PVC & 160°F (71°C) WHEN USING TPO FLSHG.
2. PIPE SEAL MUST HAVE INTACT RIB @ TOP EDGE, REGARDLESS OF PIPE DIA.
3. INSTALL MIN. OF 4 FASTENERS & PLATES AROUND THE PIPE, EQUALLY SPACED. IF FASTENERS & PLATES CANNOT BE INSTALLED AS SHOWN, THEY MAY ALSO BE POSITIONED OUTSIDE THE PIPE MAX. 12" O.C. & FLASHED W/ THERMOPLASTIC REINFORCED MEMBRANE/CUT-EDGE SEALANT (RE: CARLISLE SYNTEC DETAIL U-8B).
4. FASTENERS & PLATES ARE NOT REQD. ON ADHERED SYSTEMS UNLESS PIPE DIAMETER EXCEEDS 18".
5. ADDITIONAL INFORMATION, REFER TO SPECIFICATIONS.

3 A1.31 **DETAIL**
N.T.S.

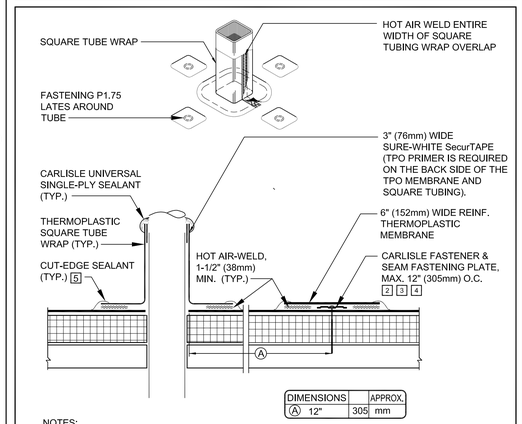

DIMENSIONS			APPROX.
A	12"	305	mm

NOTES:

1. TEMPERATURE OF THE PIPE PENETRATION MUST NOT EXCEED 140°F (60°C) WHEN USING PVC AND 160°F (71°C) WHEN USING TPO FLASHING.
2. INSTALL A MINIMUM OF 4 SEAM FASTENING PLATES FOR TUBE SIDE DIMENSIONS UP TO 6" (152mm). ADDITIONAL SEAM FASTENING PLATES WILL BE REQUIRED FOR SIDES GREATER THAN 6" (152mm) AND SHALL BE SPACED 12" (305mm) ON CENTER MAXIMUM.
3. SEAM PLATES MAY BE POSITIONED INSIDE (OR BELOW) THE PIPE FLASHING FLANGE PROVIDED MINIMUM 1-1/2" (38mm) HOT AIR WELD IS ACHIEVED BEYOND THE PLATES.
4. FASTENERS AND PLATES ARE NOT REQUIRED ON ADHERED SYSTEMS UNLESS TUBE DIMENSION EXCEEDS 12" (305mm).
5. APPROXIMATELY 1/8" (3mm) DIAMETER BEAD OF CUT-EDGE SEALANT IS REQUIRED ON CUT EDGES OF REINFORCED TPO MEMBRANE.
6. REGARDLESS OF THE FIELD MEMBRANE THICKNESS, THERMOPLASTIC "T-JOINT" COVERS ARE REQUIRED OVER THE SPLICE INTERSECTIONS OF THE SQUARE TUBE WRAP.

2 A1.31 **DETAIL**
N.T.S.

WHEN A WARRANTY WIND SPEED GREATER THAN 90MPH IS SPECIFIED, CARLISLE FASTENERS AND SEAM FASTENING PLATES SHALL NOT EXCEED 6" (152mm) ON CENTER FOR ADHERED MEMBRANE ASSEMBLIES.

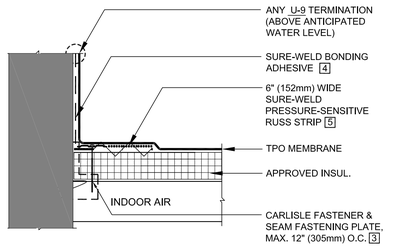

NOTES:

1. SEE MANUFACTURER STANDARD DETAILS FOR INSIDE CORNER AND RUSS APPLICATION.
2. REFER TO SPECIAL CONDITION SPEC. SUPPLEMENTS G-01-11 OR G-08-11:
   2.1. TO BLOCK INDOOR AIR INFILTRATION AND HUMIDITY AT THE JUNCTION (G-01-11).
   2.2. WHERE ROOF SYSTEM IS DESIGNED WITH A VAPOR RETARDER (G-08-11).
3. ON MECHANICALLY FASTENED SYSTEMS, HP-X FASTENERS AND PIRANHA PLATES OR HP-XTRA FASTENERS AND PIRANHA XTRA PLATES ARE REQUIRED OVER STEEL AND WOOD DECKS. ON CONCRETE DECKS, CD-10 OR HD 14-10 FASTENERS ARE USED WITH PIRANHA PLATES.
4. WHEN COUNTERFLASHING IS USED FOR TERMINATION, BONDING ADHESIVE IS NOT REQUIRED WHEN FLASHING HEIGHT IS 12" (305 mm) OR LESS. WHEN COPING OR TERMINATION BAR IS USED, ADHESIVE MAY BE ELIMINATED WHEN FLASHING HEIGHT IS 18" (457mm) OR LESS.
5. TPO PRIMER MUST BE APPLIED TO BACK SIDE OF THE SURE-WELD MEMBRANE PRIOR TO COMPLETING SPLICE TO PRESSURE-SENSITIVE RUSS.
6. IN A CASE WHERE FASTENERS MUST BE FASTENED INTO THE VERTICAL SURFACE, CARE MUST BE TAKEN TO CREASE THE RUSS AS WELL AS THE MEMBRANE TIGHTLY INTO THE ANGLE CHANGE TO MAXIMIZE CONTACT BETWEEN THE TAPE AND MEMBRANE. MEMBRANE MUST BE ADHERED TO THE FULL WIDTH OF THE TAPE. PLACING THE PLATES TIGHT INTO THE ANGLE CHANGE WILL HELP HOLD THE RUSS IN THE PROPER POSITION.

2 A1.31 **DETAIL**
N.T.S.

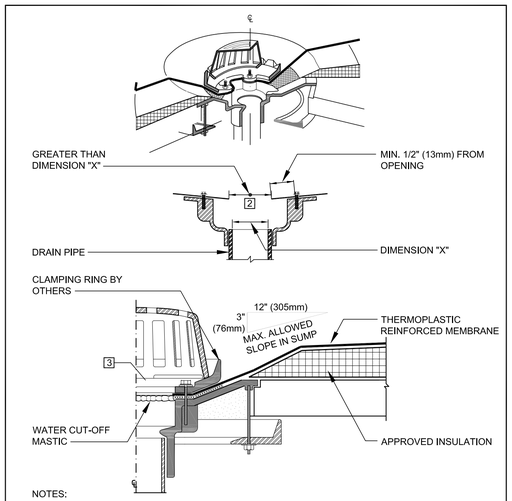

NOTES:

1. ROOF DRAIN SIZE AND NUMBER OF DRAINS SHALL BE IN ACCORDANCE WITH THE LOCAL CODES.
2. THE HOLE IN THE MEMBRANE SHALL EXCEED THE DIAMETER OF THE DRAIN PIPE, BUT SHALL BE NO LESS THAN 1/2" (13mm) FROM THE ATTACHMENT POINTS OF THE DRAIN CLAMPING RING.
3. ALL BOLTS OR CLAMPS MUST BE IN PLACE TO PROVIDE CONSTANT COMPRESSION ON WATER CUT-OFF MASTIC.
4. REMOVE EXISTING LEAD, FLASHING MATERIAL & ENSURE THE DRAIN RING IS COMPLETELY CLEAN DOWN TO BARE METAL.

6 A1.31 **DETAIL**
N.T.S.

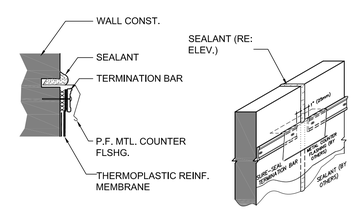

NOTES:

1. APPLY ON HARD SMOOTH SURFACE ONLY.
2. DO NOT WRAP COMPRESSION TERMINATION BAR AROUND CORNERS.
3. VERTICAL JOINTS MUST BE FULLY SEALED TO PREVENT AIR INFILTRATION.
4. CONTINUOUS COUNTER FLASHING REQUIRED FOR WARRANTY PROJECTS EXCEEDING 20-YEARS.

4 A1.30 **DETAIL**
N.T.S.

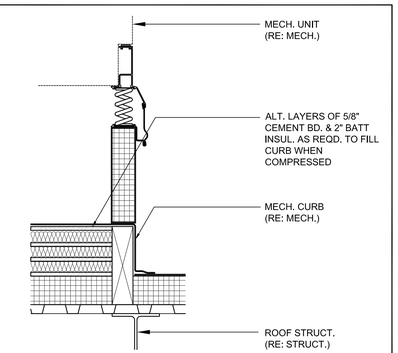

1 A1.30 **DETAIL**
N.T.S.

STATE OF MISSOURI
NUMBER A-7731
REGISTERED ARCHITECT

2/05/2020

ARCHITECT: DAVID E. EVANS
ARCHITECT LICENSE NO: A-7731

mantel teter
consulting | architecture | developing
929 Walnut Street, Suite 5104 | Kansas City, Missouri 64106
toll-free: 877.215.5600 | www.mantelteter.com

PHASE II ADDITION TO:
THE SUMMIT
3381 NW CHIPMAN ROAD
LEE'S SUMMIT, MO 64081

PROJECT #: 15-678
ISSUE DATE: 2/05/2020
DRAWN BY:
CHECKED BY: BCR
REVISIONS:

SHEET No.
A1.31
ROOF PLAN DETAILS

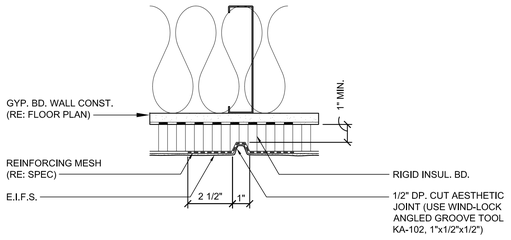

5 A2.10 **DETAIL**
N.T.S.

NOTE:
1. SEE EXTERIOR BUILDING ELEVATIONS FOR REVEAL LOCATIONS
2. HORIZONTAL & VERTICAL JOINTS (SIM.)

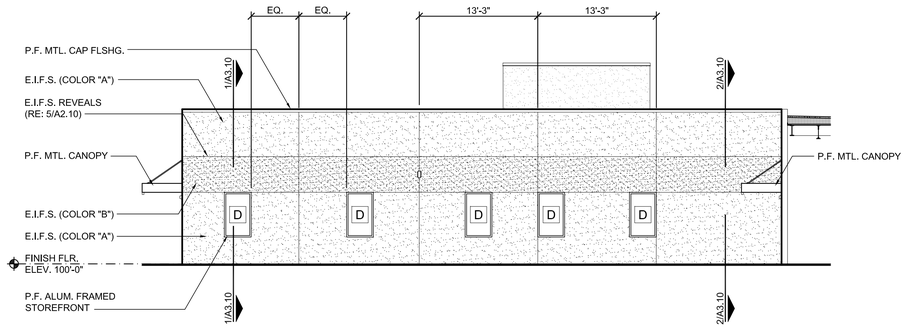

4 A2.10 **SOUTH ELEVATION**
1/8"=1'-0"

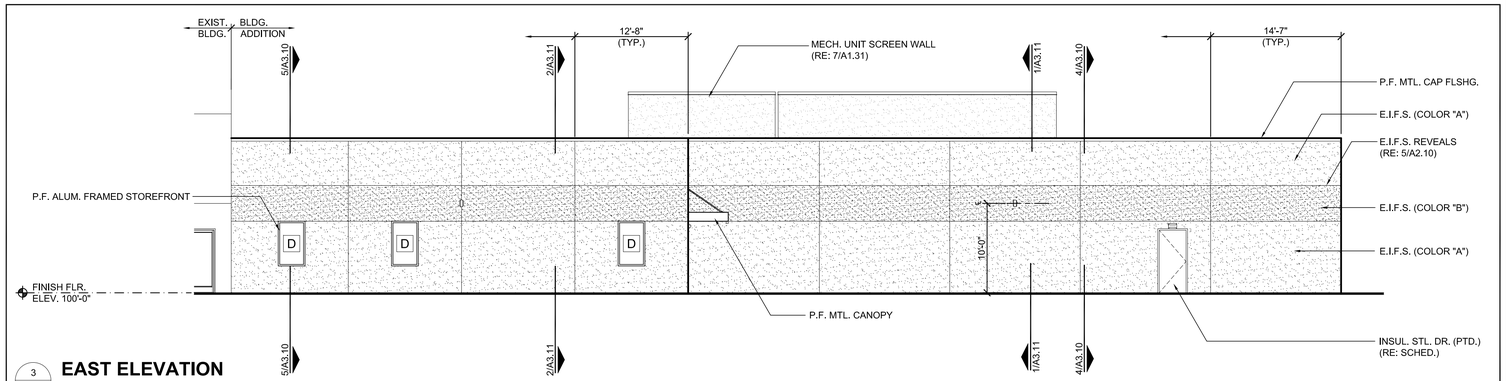

3 A2.10 **EAST ELEVATION**
1/8"=1'-0"

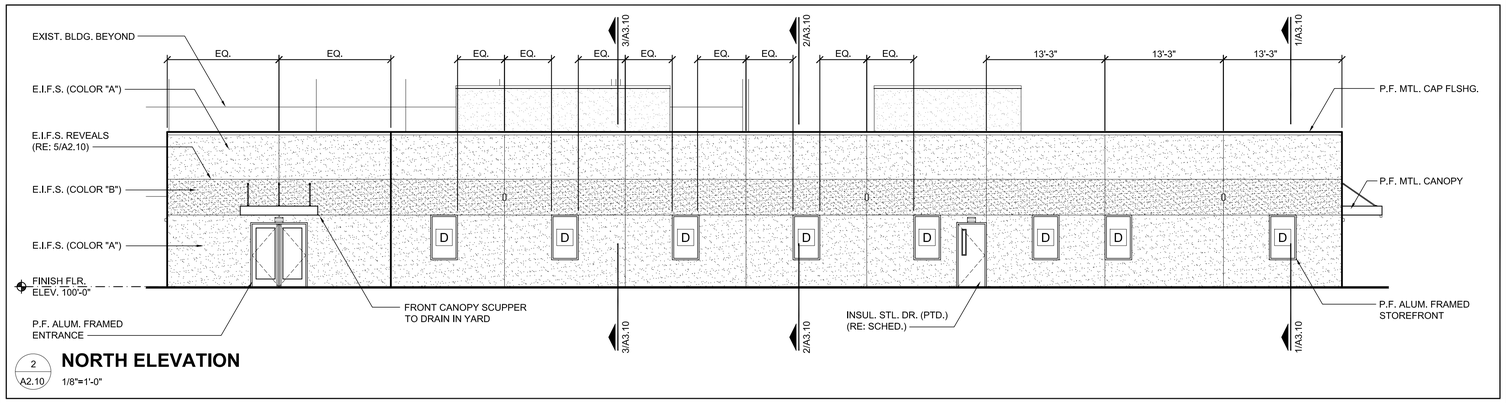

2 A2.10 **NORTH ELEVATION**
1/8"=1'-0"

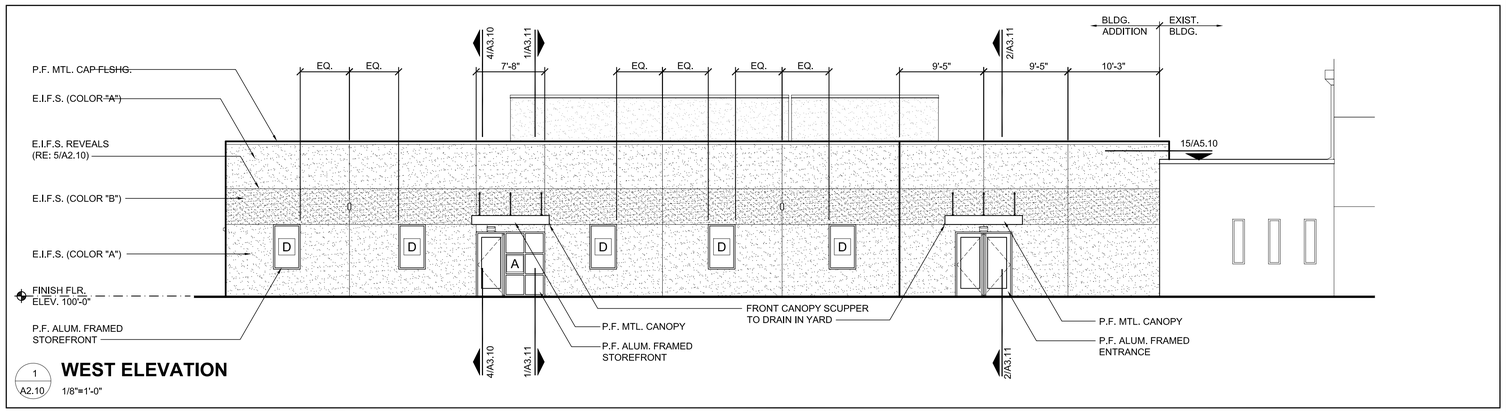

1 A2.10 **WEST ELEVATION**
1/8"=1'-0"

NOTE:
THE MOCK-UP PANEL BELOW IS PROVIDED TO SHOW INTENT ONLY. MOCK-UP PANELS SHALL INCLUDE ALL EXTERIOR CLADDING MATERIALS, ROOFING MATERIALS, ANCHORAGE, FLUID APPLIED MEMBRANE AIR BARRIER, SUBSTRATES & JOINT CONDITIONS. PROVIDE MORE THAN ONE PANEL IF NECESSARY TO SHOW ALL CONDITIONS. REFERENCE EACH EXTERIOR MATERIAL SPECIFICATION DIVISION FOR ADDITIONAL MOCK-UP PANEL REQUIREMENTS.

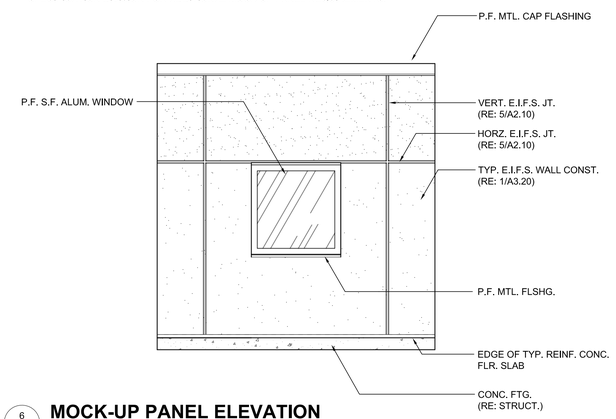

6 A2.10 **MOCK-UP PANEL ELEVATION**
1/2" = 1'-0"

STATE OF MISSOURI
NUMBER A-7731
REGISTERED ARCHITECT

2/05/2020

ARCHITECT: DAVID E. EVANS
ARCHITECT LICENSE NO: A-7731

mantel teter
consulting | architecture | developing
929 Walnut Street, Suite 5104 | Kansas City, Missouri 64106
toll-free: 877.215.5600 | www.manteltteter.com

PHASE II ADDITION TO:
THE SUMMIT
3381 NW CHIPMAN ROAD
LEE'S SUMMIT, MO 64081

PROJECT #: 15-678
ISSUE DATE: 2/05/2020
DRAWN BY:
CHECKED BY: BCR
REVISIONS:

SHEET No.
A2.10
EXTERIOR BUILDING ELEVATIONS

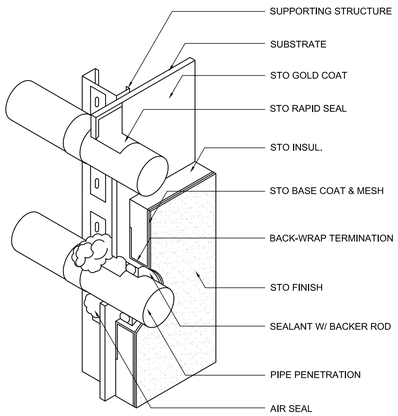

NOTES:
1. DETAIL ASSUMES PIPE IS INSTALLED PRIOR TO THE E.I.F.S. OR THAT ITS LOCATION HAS BEEN IDENTIFIED.
2. PREPARE AN OPENING IN THE E.I.F.S. W/ A JOINT OF 1/2" (13MM) AROUND THE PENETRATION & PROVIDE SEALANT W/ A CLOSED CELL BACKER ROD. PROVIDE AIR SEAL AROUND THE INTERIOR SIDE OF THE PENETRATION TO PROVIDE AIR SEAL & TO REDUCE THE PRESSURE DIFFERENCE ACROSS THE OUTSIDE SEALANT.
3. PROVIDE BARRIER MEMBRANE IN LIEU OF STO GOLD FILL AT PENETRATION WHERE JOINT BETWEEN SHEATHING & PENETRATING ELEMENT EXCEEDS 1/8" (13MM). LAP BARRIER MEMBRANE OVER STO GOLD COAT.

12 A2.20 **DETAIL**
N.T.S.

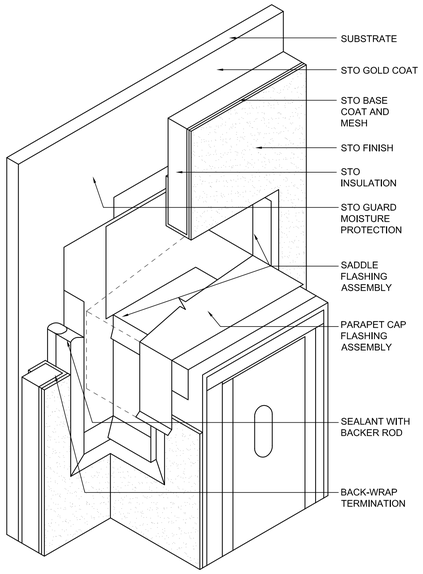

NOTES:
1. INSTALL STO E.I.F.S. OVER STO GUARD SYSTEM
2. LAP E.I.F.S. OVER THE FLASHING ASSEMBLY AT THE TOP BY A MINIMUM OF 2" AND TERMINATE WITH 1/2" JOINT AROUND THE PERIMETER.
3. PROVIDE PARAPET CAP FLASHING.

10 A2.20 **DETAIL**
N.T.S.

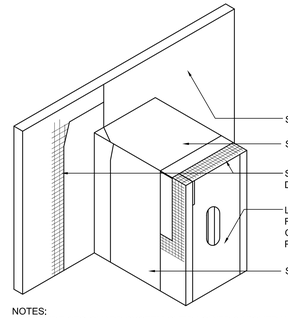

NOTES:
1. PROVIDE STO GUARD SYSTEM OVER LOWER & HIGHER WALL PRIOR TO THE INSTALLATION OF SADDLE FLSHG. & STO E.I.F.S.
2. SEE STANDARD DETAIL FOR FOR SADDLE FLSHG. ASSEMBLY
3. SEE STANDARD DETAIL FOR INTEGRATION OF E.I.F.S. W/ SADDLE FLSHG. & PARAPET CAP FLSHG.

8 A2.20 **DETAIL**
N.T.S.

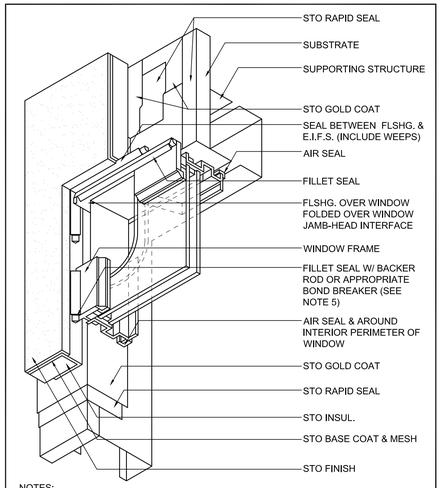

NOTES:
1. PROVIDE A MOCK-UP INSTALLATION & TEST USING MATERIALS & SUBTRADES ASSOCIATED W/ THE PROJECT.
2. PROVIDE FLSHG. INSTALLED OVER THE WINDOW TO DIRECT WATER AWAY FROM THE WINDOW. VERIFY REQUIREMENTS FOR HEAD FLSHG. W/ LOCAL CODES & WINDOW MANUFACTURER. IF NOT REQUIRED, SEAL BETWEEN WINDOW HEAD & E.I.F.S.
3. PROTECT ROUGH OPENING AGAINST WATER PENETRATION BY WRAPPING W/ STO GOLD FILL W/ STO DETAIL MESH & STO GOLD COAT. DIRECT ANY WATER PENETRATION TO THE EXTERIOR AT OR ABOVE THE SILL PAN FLSHG.
4. PROVIDE & AIR BARRIER CONNECTION AROUND THE PERIMETER OF THE WINDOW TO REDUCE: LEAKING, CONDENSATION RELATED TO AIR MOVEMENT, & SOUND & INSECT INTRUSION.
5. VERIFY SUITABILITY OF FILLET SEAL CONFIGURATION. CONSULT SEALANT & WINDOW MANUFACTURER.

5 A2.20 **DETAIL**
N.T.S.

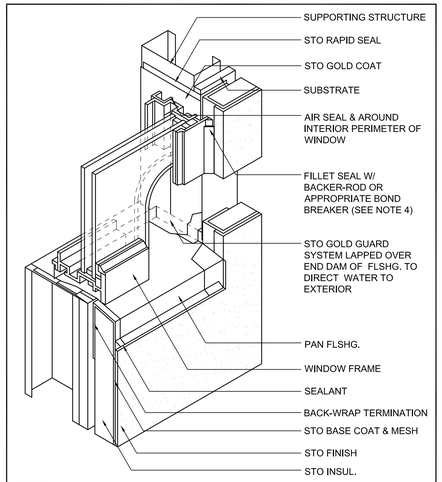

NOTES:
1. PROVIDE A MOCK-UP INSTALLATION & TEST USING MATERIALS & SUBTRADES ASSOCIATED W/ THE PROJECT.
2. PROTECT ROUGH OPENING AGAINST WATER PENETRATION BY WRAPPING W/ STO GOLD FILL W/ STO DETAIL MESH & STO GOLD COAT. DIRECT ANY WATER PENETRATION TO THE EXTERIOR AT OR ABOVE THE SILL PAN FLSHG.
3. PROVIDE & AIR BARRIER CONNECTION AROUND THE PERIMETER OF THE WINDOW TO REDUCE: LEAKING, CONDENSATION RELATED TO AIR MOVEMENT, & SOUND & INSECT INTRUSION.
4. VERIFY SUITABILITY OF FILLET SEAL CONFIGURATION. CONSULT SEALANT & WINDOW MANUFACTURER.

2 A2.20 **DETAIL**
N.T.S.

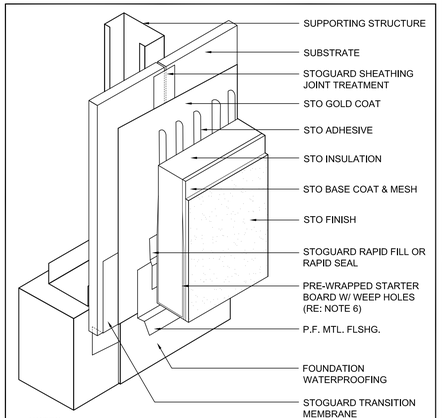

NOTES:
1. PROTECT WALL ASSEMBLY FROM RISING DAMP.
2. TERMINATE SYSTEM A MINIMUM OF 8" ABOVE GRADE OR AS REQUIRED BY CODE OR UNLESS NOTED OTHERWISE.
3. DIRECT SPRINKLERS AWAY FROM THE WALL.
4. PROTECT THE WALL FROM DIRT ACCUMULATION BY COVERING EXPOSED EARTH WHERE SPLASH MAY OCCUR.
5. PROVIDE ULTRA-HIGH IMPACT RESISTANCE (STO DETAIL 1.00B) TO A MINIMUM HEIGHT OF 6'-0" ABOVE FINISHED GRADE AT AREAS ACCESSIBLE TO PEDESTRIAN TRAFFIC AND OTHER AREAS EXPOSED TO ABNORMAL STRESS OR IMPACT.
6. TERMINATION OF BOTTOM OF WALL TO BE PRE-WRAPPED STARTER BOARD (ALTERNATE STARTER TRACK NOT ACCEPTABLE - NOT SHOWN).

7 A2.20 **DETAIL**
N.T.S.

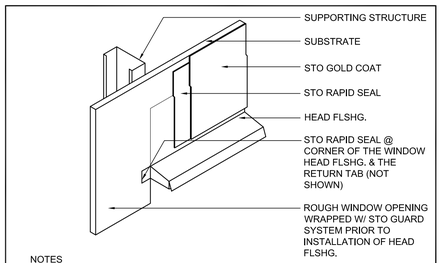

NOTES
1. PROVIDE HEAD FLSHG. AS REQUIRED BY LOCAL BUILDING CODES & WINDOW MANUFACTURER.
2. COORDINATE STO GUARD INSTALLATION SEQUENCE W/ WINDOW INSTALLER & OTHER RELATED TRADES.

4 A2.20 **DETAIL**
N.T.S.

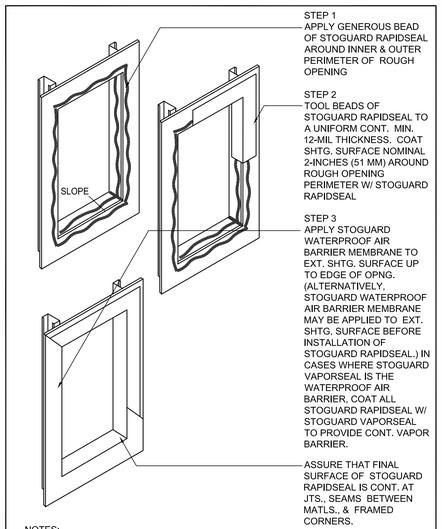

NOTES:
1. STOGUARD WATERPROOF AIR BARRIER MEMBRANE OPTIONS:
   1.1. STO GOLD COAT (VAPOR PERMEABLE)
   1.2. STO EMERALDCOAT (HIGH PERM)
   1.3. STOGUARD VAPORSEAL (VAPOR IMPERMEABLE)
2. PREPARE OPENING PRIOR TO THE INSTALLATION OF THE WINDOW OR MECHANICAL EQUIPMENT.
3. INCORPORATE FLSHG. AS ILLUSTRATED IN 20.23A OR AS PER OTHER DETAILS WHERE FLSHG. IS SHOWN. PROVIDE SILL WEDGE OR OTHER MEANS FOR POSTIVE SLOPE TO EXTERIOR AT SILL.
4. THE COMPLETE INSTALLATION OF WINDOW OR MECHANICAL EQUIPMENT MUST INCLUDE AN AIR SEAL BETWEEN THE OBJECT & THE STOGUARD PROTECTION, INBOUND OF THE OUTER PERIMETER WEATHER SEAL.
5. REFER TO STO SPECIFICATIONS & PRODUCT BULLETINS FOR DETAILED INFORMATION ON SUBSTRATES & STO MATERIAL OPTIONS. ADDITIONAL WATER-RESISTIVE BARRIER/SLIP SHEET REQUIRED BEHIND SOME CLADDINGS NOT SHOWN. REFER TO STO DETAIL 20.00B FOR ADDITIONAL INFORMATION.

1 A2.20 **DETAIL**
N.T.S.

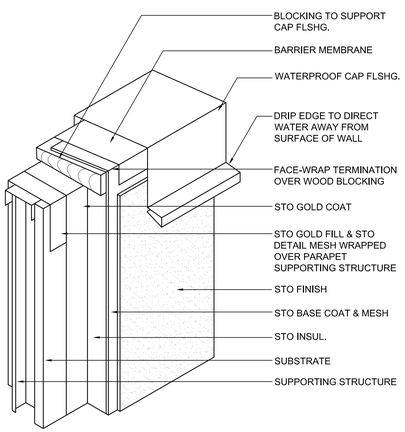

NOTES:
1. PROVIDE A BARRIER MEMBRANE OVER THE PARAPET & INTEGRATE IT W/ THE ROOFING OR DECK WATERPROOFING ASSEMBLY. THIS PROVIDES AIR BARRIER CONTINUITY OVER THE PARAPET & SECONDARY WEATHER PROTECTION UNDER THE CAP FLSHG.
2. PROVIDE MIN. 2.5" (65MM) OVERLAP OF FLSHG. OVER FACE OF E.I.F.S. INCREASE OVERLAP W/ BUILDING HEIGHT.
3. INSTALL STO GUARD SYSTEM OVER THE PARAPET SUPPORTING STRUCTURE LAPPING ONTO COMPATIBLE SHEATHING.

11 A2.20 **DETAIL**
N.T.S.

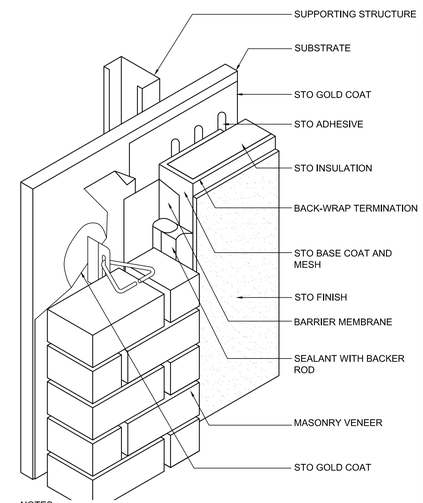

NOTES:
1. DETERMINE INSTALLATION SEQUENCE IN ADVANCE OF CONSTRUCTION. COORDINATE SUBTRADES TO ENSURE THE PROPER INSTALLATION OF MATERIALS.
2. BARRIER MEMBRANE ISOLATES THE POTENTIALLY WET ENVIRONMENT BEHIND THE ALTERATE CLADDING FROM THE E.I.F.S..
3. PROVIDE MINIMUM 3/4" JOINT BETWEEN THE E.I.F.S. AND THE ALTERNATE CLADDING.
4. PROVIDE DRAINAGE FOR THE JOINT ASSEMBLY.

9 A2.20 **DETAIL**
N.T.S.

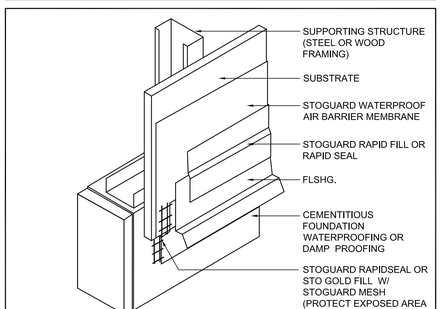

NOTES:
1. STOGUARD TRANSITION MEMBRANE OPTIONS:
   A. STOGUARD RAPIDSEAL
   B. STO GOLD FILL W/ STOGUARD MESH (TOP COATED W/ STOGUARD WATERPROOF AIR BARRIER MEMBRANE)
   C. STOGUARD FABRIC W/ STOGUARD WATERPROOF AIR BARRIER MEMBRANE
   D. STOGUARD TAPE (W/ STOGUARD FABRIC SHINGLE LAP)
2. REFER TO DETAIL 20.00A FOR SHEATHING JOINT TRANSITION MEMBRANE OPTIONS.
3. STOGUARD WATERPROOF AIR BARRIER MEMBRANE OPTIONS:
   A. STO GOLD COAT (VAPOR PERMEABLE)
   B. STO EMERALDCOAT (HIGH PERM)
   C. STOGUARD VAPORSEAL (VAPOR IMPERMEABLE)
   D. STO AIRSEAL (HIGH PERM)
4. REFER TO STO SPECIFICATIONS & PRODUCT BULLETINS FOR DETAILED INFORMATION ON SUBSTRATES & STO MATERIAL OPTIONS. ADDITIONAL WATER-RESISTIVE BARRIER/SLIP SHEET REQUIRED BEHIND SOME CLADDINGS NOT SHOWN. REFER TO STO ST&ARD DETAIL 20.00B FOR ADDITIONAL INFORMATION (NOT SHOWN).

6 A2.20 **DETAIL**
N.T.S.

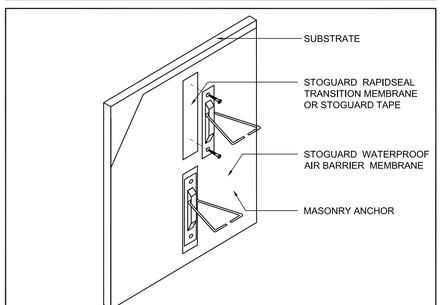

NOTES:
1. STOGUARD TRANSITION MEMBRANE OPTIONS:
   A. STOGUARD RAPIDSEAL
   B. STOGUARD TAPE
2. STOGUARD WATERPROOF AIR BARRIER MEMBRANE OPTIONS:
   A. STO GOLD COAT (VAPOR PERMEABLE)
   B. STO EMERALDCOAT (HIGH PERM)
   C. STOGUARD VAPORSEAL (VAPOR IMPERMEABLE)
   D. STO AIRSEAL (HIGH PERM)
3. CAUTION: ALL FASTENERS SHOULD BE INTO FRAMING WITH FASTENER HEAD SNUG TO TIE SURFACE. REMOVE FASTENERS AND SEAL ALL PENETRATIONS WHERE STUDS ARE MISSED USING STOGUARD RAPIDSEAL OR COMPATIBLE SEALANT.
4. REFER TO STO SPECIFICATIONS AND PRODUCT BULLETINS FOR DETAILED INFORMATION ON SUBSTRATES AND STO MATERIAL OPTIONS. ADDITIONAL WATER-RESISTIVE BARRIER/SLIP SHEET REQUIRED BEHIND SOME CLADDINGS NOT SHOWN. REFER TO STO STANDARD DETAIL 20.00B FOR ADDITIONAL INFORMATION (NOT SHOWN).

3 A2.20 **DETAIL**
N.T.S.

GENERAL STO E.I.F.S. NOTES:
1. STO DETAILS ARE ILLUSTRATIONS OF CONSTRUCTION. THEY ARE GUIDELINES, INTENDED FOR USE BY THE DESIGN/CONSTRUCTION PROFESSIONAL, TO ASSIST IN DEVELOPING PROJECT SPECIFIC DETAILS. THEY SHOULD BE MODIFIED WHERE NECESSARY TO ACCOMODATE INDIVIDUAL PROJECT CONDITIONS. REFER TO APPROPRIATE STO SPECIFICATION FOR DESIGN REQUIREMENTS. REFER TO LOCAL BUILDING CODE FOR ANY SPECIAL REQUIREMENTS (WWW.STOCORP.COM).
2. THE STO DETAILS SHOWN ARE FOR THE SPECIFIED SYSTEM AS OUTLINED IN THE PROJECT MANUAL FOR THIS PROJECT ONLY. NOTIFY THE ARCHITECT OF ANY DEVIATION FROM THE SPECIFIED SYSTEM.

STATE OF MISSOURI
NUMBER A-7731
REGISTERED ARCHITECT
2/05/2020

ARCHITECT: DAVID E. EVANS
ARCHITECT LICENSE NO: A-7731

mantel teter
consulting | architecture | developing
929 Walnut Street, Suite 5104 | Kansas City, Missouri 64106
toll-free: 877.215.5600 | www.manteltteter.com

PHASE II ADDITION TO:
THE SUMMIT
3381 NW CHIPMAN ROAD
LEE'S SUMMIT, MO 64081

PROJECT #: 15-678
ISSUE DATE: 2/05/2020
DRAWN BY:
CHECKED BY: BCR

REVISIONS:

SHEET No.
A2.20
E.I.F.S. DETAILS

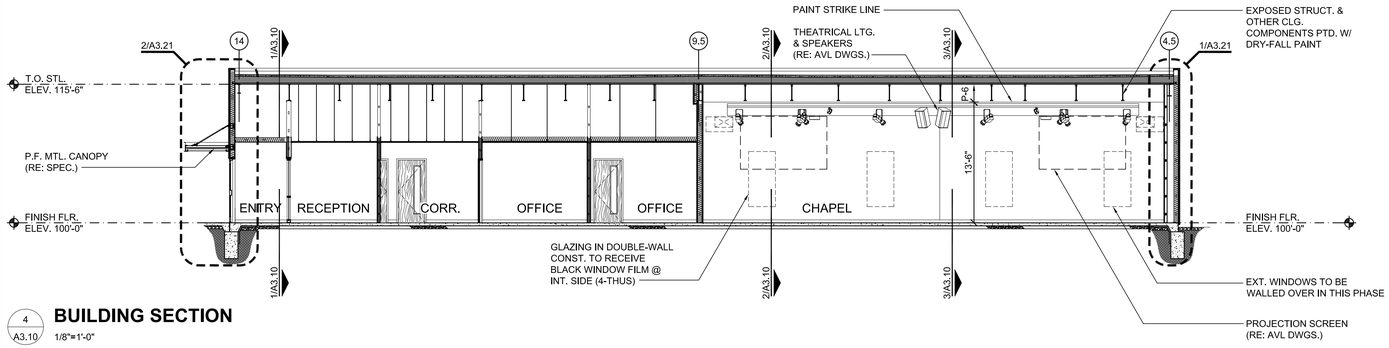

4 A3.10 **BUILDING SECTION**
1/8"=1'-0"

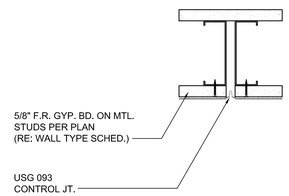

MAXIMUM SPACING–GYPSUM BOARD CONTROL JOINTS

CONSTRUCTION & LOCATION	MAX. SINGLE DIMENSION (FT.)	MAX. SINGLE AREA (SQ. FT.)
PARTITION-INTERIOR	30	–
CEILING-INTERIOR		
WITH PERIMETER RELIEF	50	2500
WITHOUT PERIMETER RELIEF	30	900
CEILING-EXTERIOR GYPSUM	30	900

6 A3.10 **DETAIL**
N.T.S.

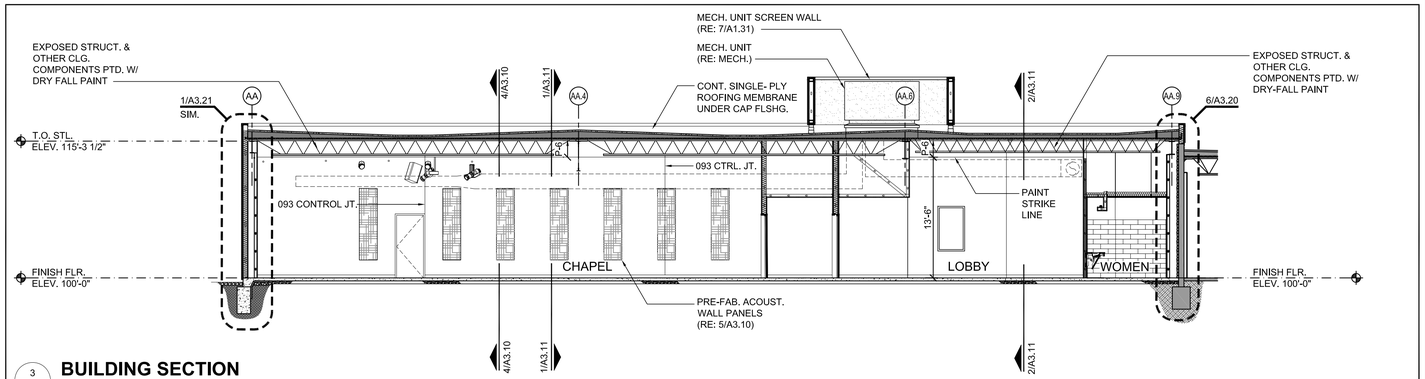

3 A3.10 **BUILDING SECTION**
1/8"=1'-0"

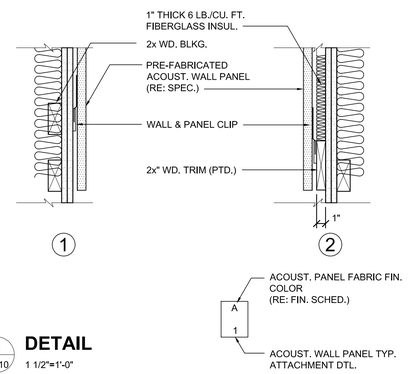

5 A3.10 **DETAIL**
1 1/2"=1'-0"

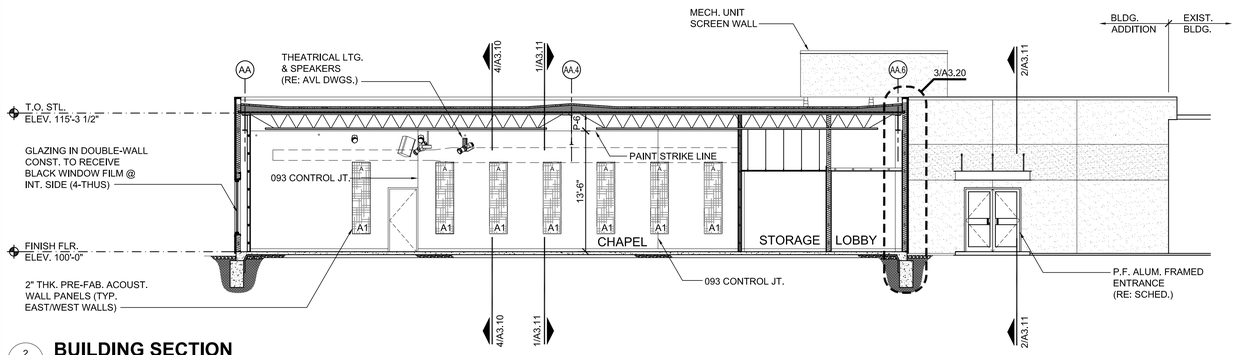

2 A3.10 **BUILDING SECTION**
1/8"=1'-0"

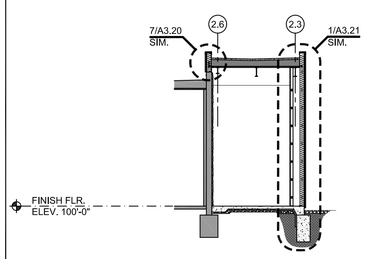

5 A3.10 **BUILDING SECTION**
1/8"=1'-0"

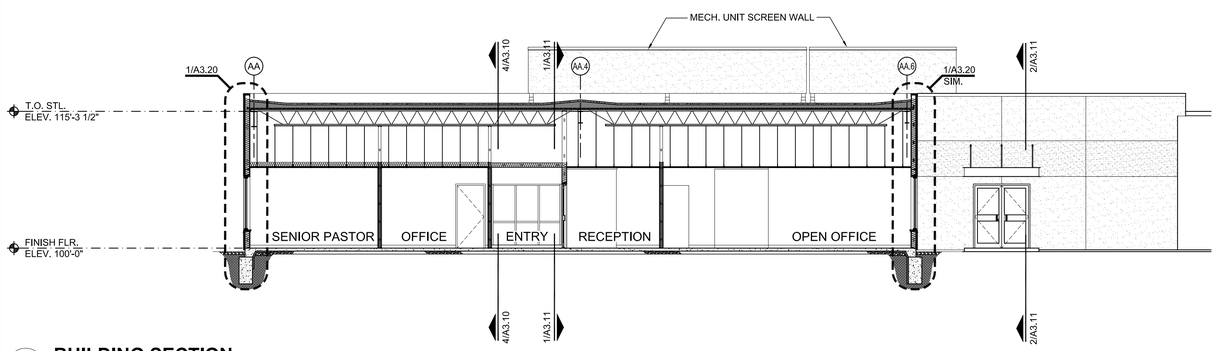

1 A3.10 **BUILDING SECTION**
1/8"=1'-0"

STATE OF MISSOURI
NUMBER A-7731
REGISTERED ARCHITECT

2/05/2020

ARCHITECT: DAVID E. EVANS
ARCHITECT LICENSE NO: A-7731

mantel teter
consulting | architecture | developing
929 Walnut Street, Suite 5104 | Kansas City, Missouri 64106
toll-free: 877.215.5600 | www.mantelteter.com

PHASE II ADDITION TO:
THE SUMMIT
3381 NW CHIPMAN ROAD
LEE'S SUMMIT, MO 64081

PROJECT #: 15-678
ISSUE DATE: 2/05/2020
DRAWN BY:
CHECKED BY: BCR
REVISIONS:

SHEET No.
A3.10
BUILDING SECTIONS

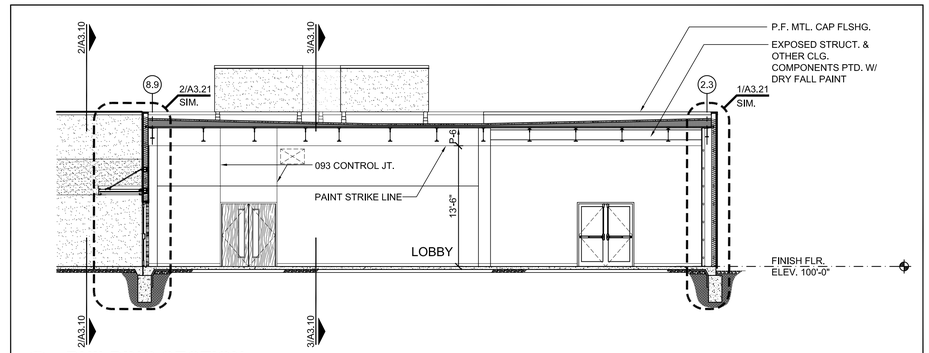

2 A3.11 **BUILDING SECTION**
1/8"=1'-0"

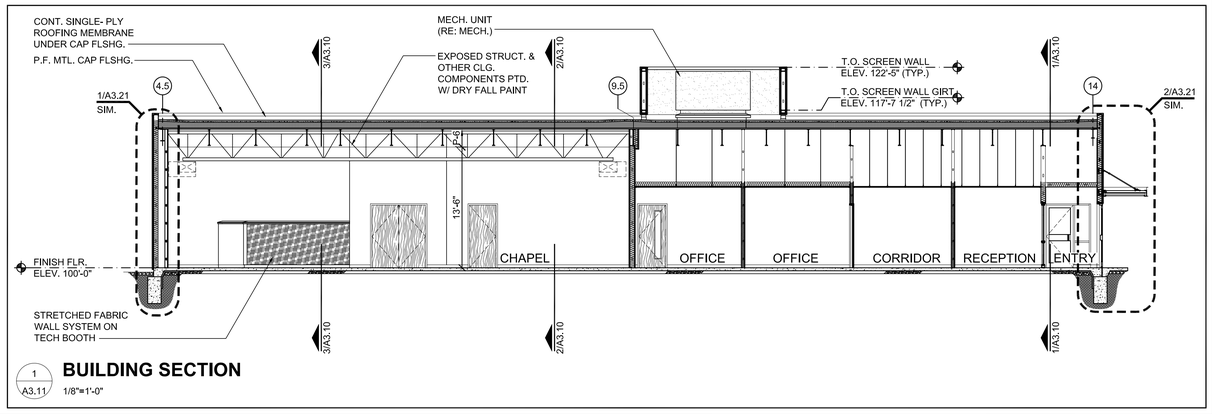

1 A3.11 **BUILDING SECTION**
1/8"=1'-0"

STATE OF MISSOURI
NUMBER
A-7731
REGISTERED ARCHITECT

2/05/2020

ARCHITECT: DAVID E. EVANS
ARCHITECT LICENSE NO: A-7731

mantel teter
consulting | architecture | developing
929 Walnut Street, Suite 5104 | Kansas City, Missouri 64106
toll-free: 877.215.5600 | www.manteltteter.com

PHASE II ADDITION TO:
THE SUMMIT
3381 NW CHIPMAN ROAD
LEE'S SUMMIT, MO 64081

PROJECT #: 15-678
ISSUE DATE: 2/05/2020
DRAWN BY:
CHECKED BY: BCR
REVISIONS:

SHEET No.
A3.11
BUILDING SECTIONS

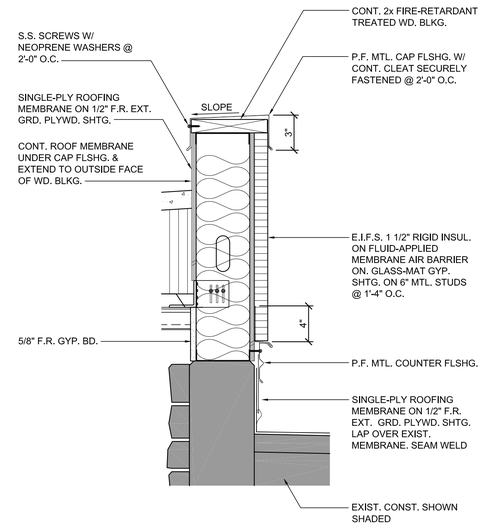

7 A3.20 **DETAIL**
1 1/2"=1'-0"

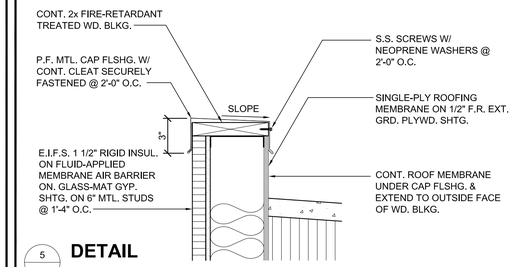

5 A3.20 **DETAIL**
1 1/2"=1'-0"

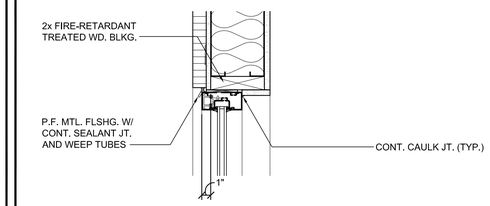

4 A3.20 **DETAIL**
1 1/2"=1'-0"

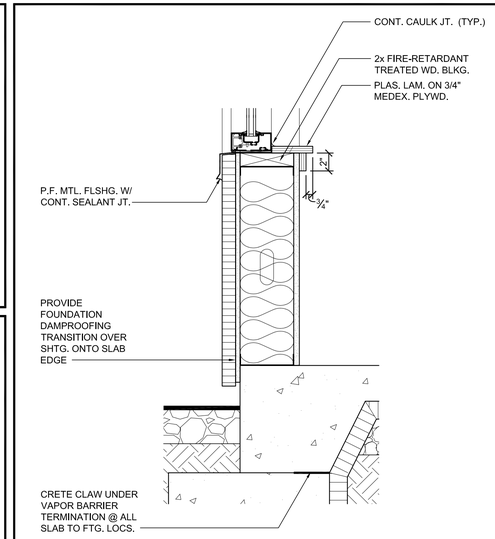

2 A3.20 **DETAIL**
1 1/2"=1'-0"

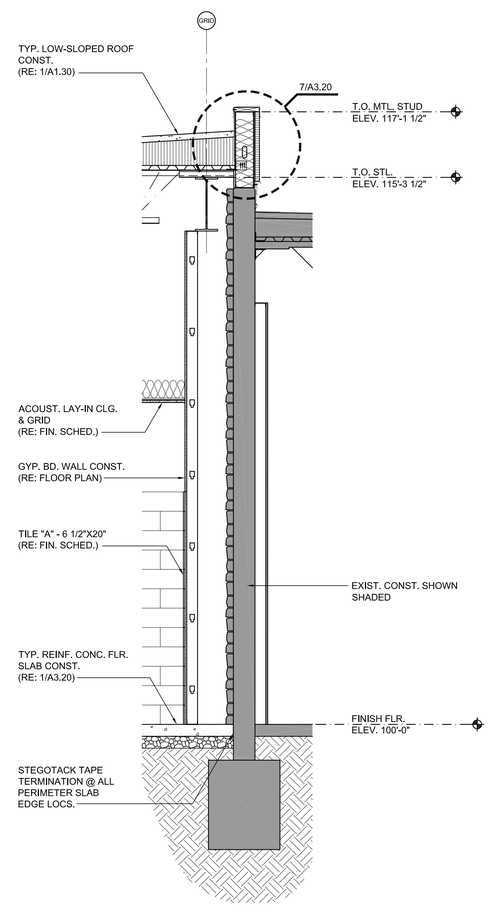

6 A3.20 **WALL SECTION**
1/2"=1'-0"

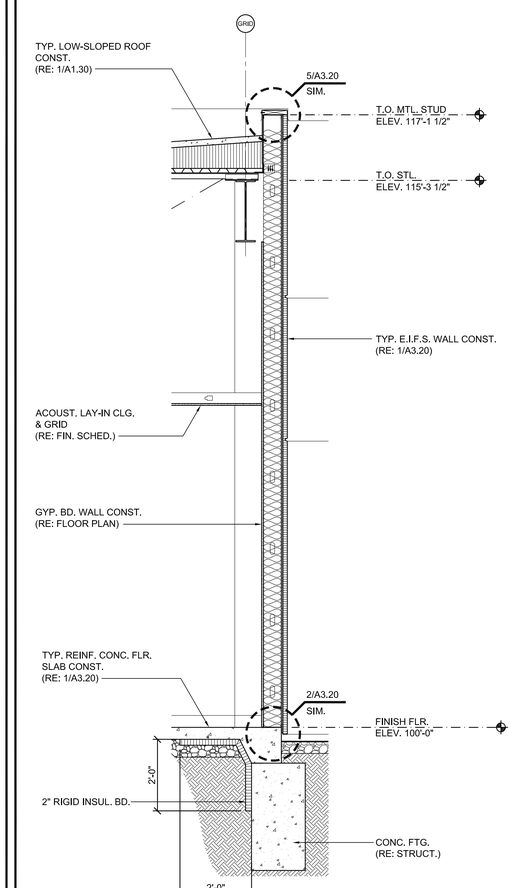

3 A3.20 **WALL SECTION**
1/2"=1'-0"

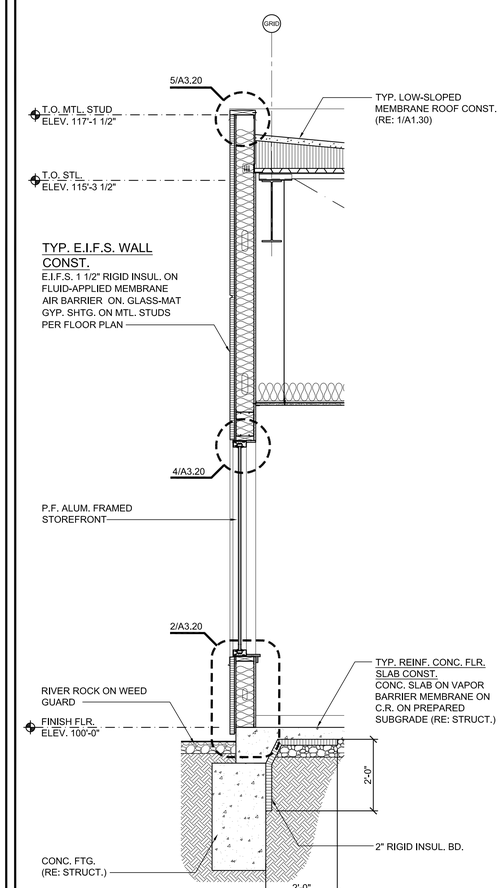

1 A3.20 **WALL SECTION**
1/2"=1'-0"

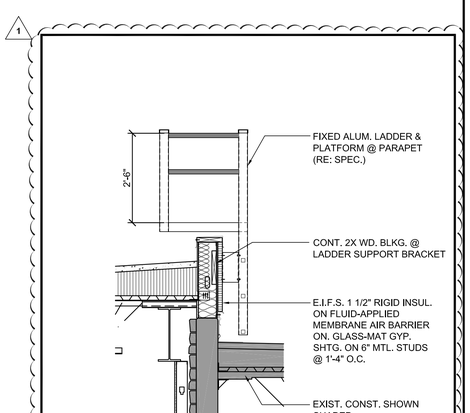

8 A3.20 **DETAIL**
1 1/2"=1'-0"

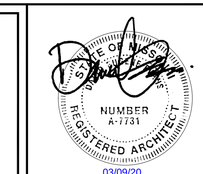

03/09/20

ARCHITECT: DAVID E. EVANS
ARCHITECT LICENSE NO: A-7731

mantel teter
consulting | architecture | developing
929 Walnut Street, Suite 5104 | Kansas City, Missouri 64106
toll-free: 877.215.5600 | www.manteltteter.com

PHASE II ADDITION TO:
THE SUMMIT
3381 NW CHIPMAN ROAD
LEE'S SUMMIT, MO 64081

PROJECT #: 15-678
ISSUE DATE: 2/05/2020
DRAWN BY:
CHECKED BY: BCR

REVISIONS:
1. 3/09/2020

SHEET No.
A3.20
WALL SECTIONS / DETAILS

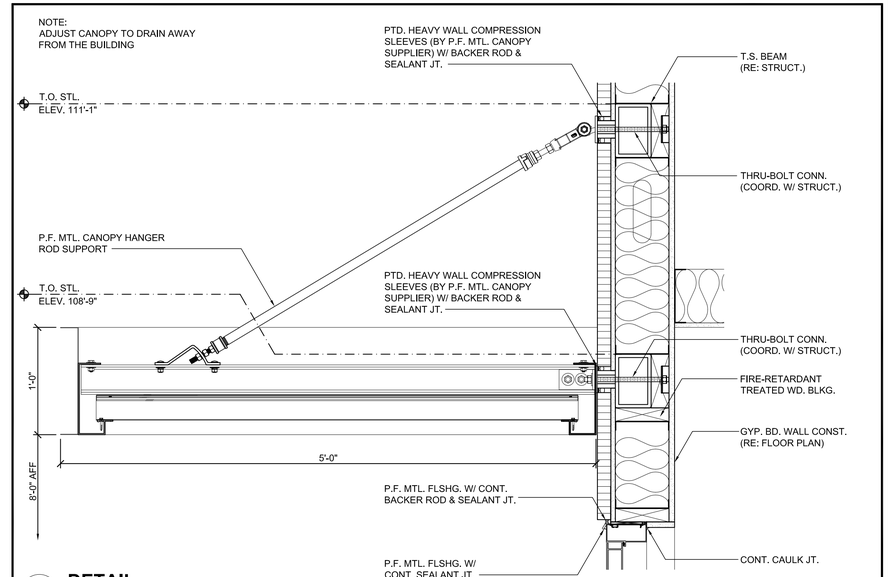

3 / A3.21 **DETAIL**
1 1/2"=1'-0"

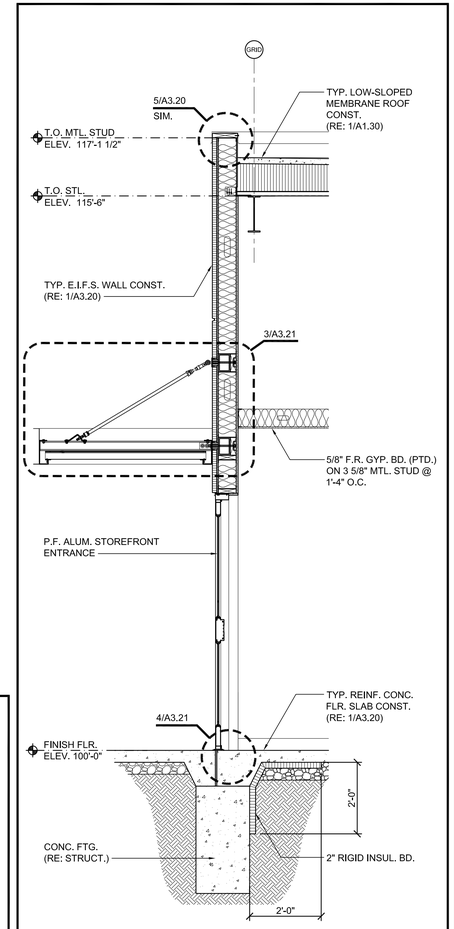

2 / A3.21 **WALL SECTION**
1/2"=1'-0"

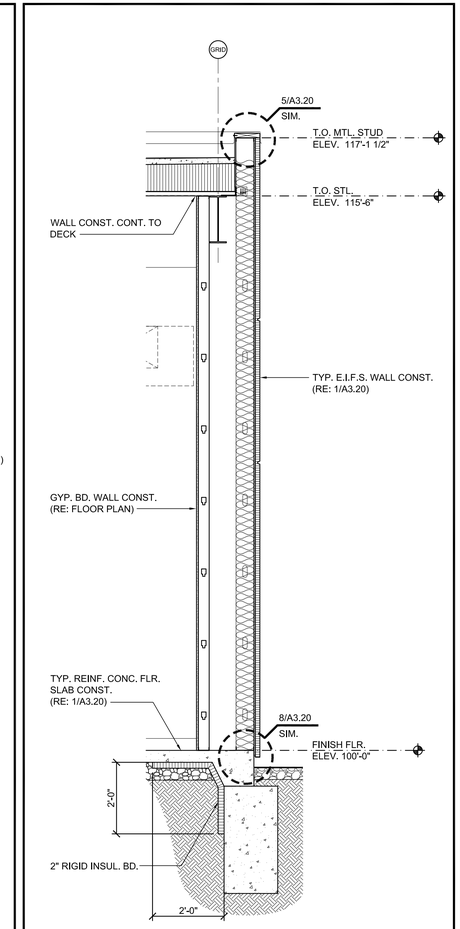

1 / A3.21 **WALL SECTION**
1/2"=1'-0"

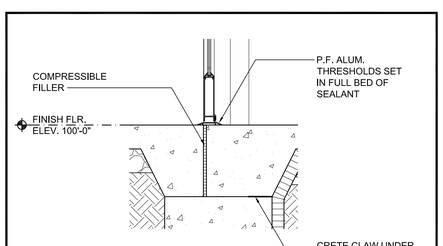

4 / A3.21 **DETAIL**
1 1/2"=1'-0"

STATE OF MISSOURI
NUMBER A-7731
REGISTERED ARCHITECT

2/05/2020

ARCHITECT: DAVID E. EVANS
ARCHITECT LICENSE NO: A-7731

mantel teter
consulting | architecture | developing
929 Walnut Street, Suite 5104 | Kansas City, Missouri 64106
toll-free: 877.215.5600 | www.manteltteter.com

PHASE II ADDITION TO:
THE SUMMIT
3381 NW CHIPMAN ROAD
LEE'S SUMMIT, MO 64081

PROJECT #: 15-678
ISSUE DATE: 2/05/2020
DRAWN BY:
CHECKED BY: BCR

REVISIONS:

SHEET No.
A3.21
WALL SECTIONS / DETAILS

NOT USED

9 / A4.10 — 1/4" = 1'-0"

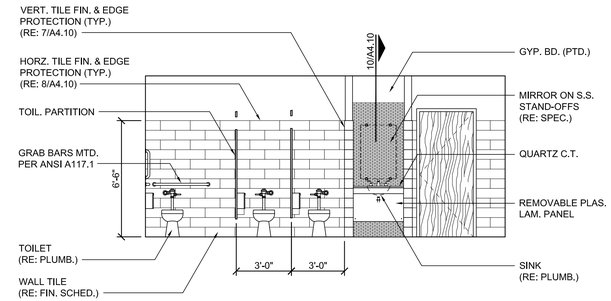

INTERIOR ELEVATION

3 / A4.10 — 1/4" = 1'-0"

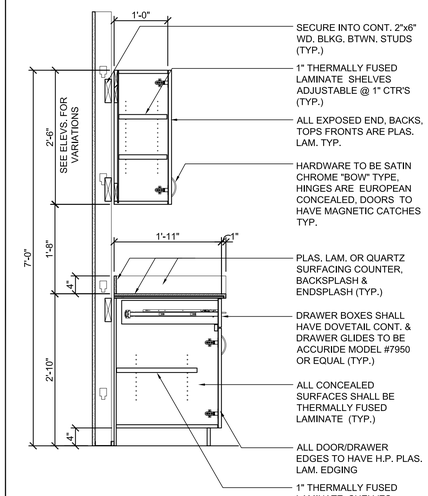

DETAIL

11 / A4.10 — 3/4" = 1'-0"

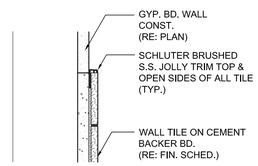

DETAIL

8 / A4.10 — 3" = 1'-0"

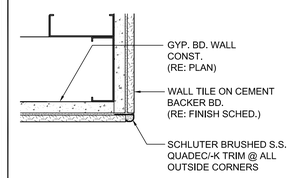

DETAIL

7 / A4.10 — 3" = 1'-0"

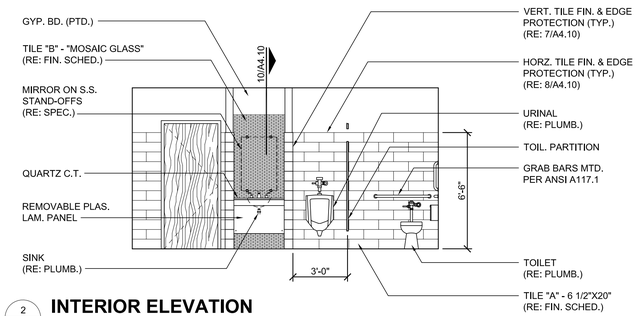

INTERIOR ELEVATION

2 / A4.10 — 1/4" = 1'-0"

NOTE:
1. PROVIDE BLKG. IN WALL @ ALL GRAB BAR LOC.
2. WALL TILE NOT SHOWN FOR CLARITY

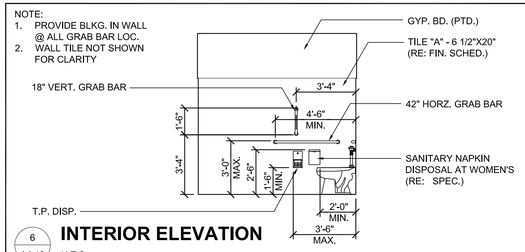

INTERIOR ELEVATION

6 / A4.10 — N.T.S.

NOTE:
TILE TO BE INSTALLED ON ALL WALLS

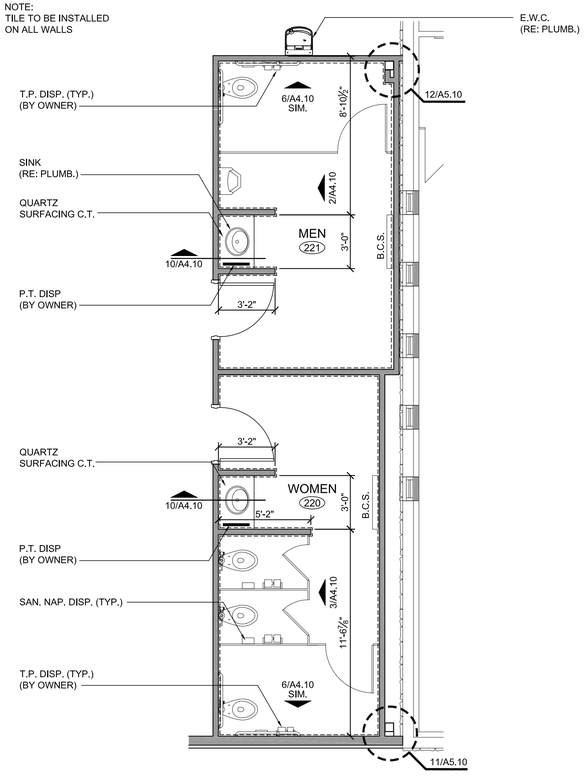

ENLARGED PLAN

1 / A4.10 — 1/4" = 1'-0"

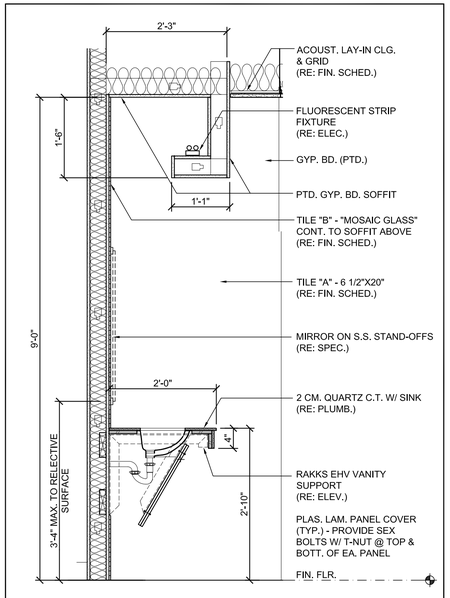

DETAIL

10 / A4.10 — 3/4"=1'-0"

NOTE: LAVATORY HARDWARE PER ANSI STDS. (RE: PLUMB.)

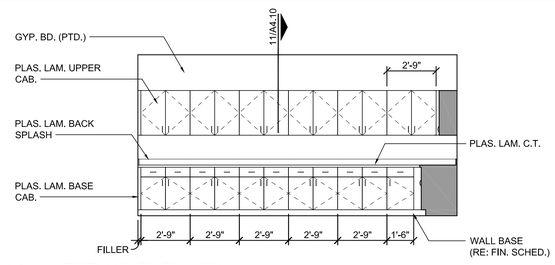

INTERIOR ELEVATION

5 / A4.10 — 1/4" = 1'-0"

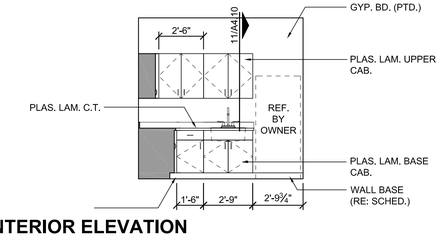

INTERIOR ELEVATION

4 / A4.10 — 1/4" = 1'-0"

STATE OF MISSOURI
NUMBER A-7731
REGISTERED ARCHITECT

2/05/2020

ARCHITECT: DAVID E. EVANS
ARCHITECT LICENSE NO: A-7731

mantel teter
consulting | architecture | developing
929 Walnut Street, Suite 5104 | Kansas City, Missouri 64106
toll-free: 877.215.5600 | www.manteltteter.com

PHASE II ADDITION TO:
THE SUMMIT
3381 NW CHIPMAN ROAD
LEE'S SUMMIT, MO 64081

PROJECT #: 15-678
ISSUE DATE: 2/05/2020
DRAWN BY:
CHECKED BY: BCR
REVISIONS:

SHEET No.
A4.10
ENLARGED PLANS / INTERIOR ELEVATIONS / DETAILS

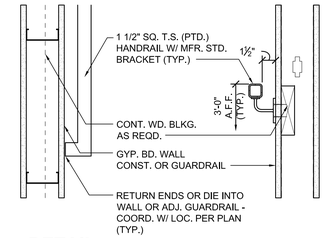

4 A4.11 **DETAIL**
1 1/2" = 1'-0"

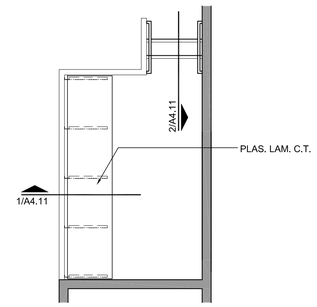

3 A4.11 **DETAIL**
1 1/2" = 1'-0"

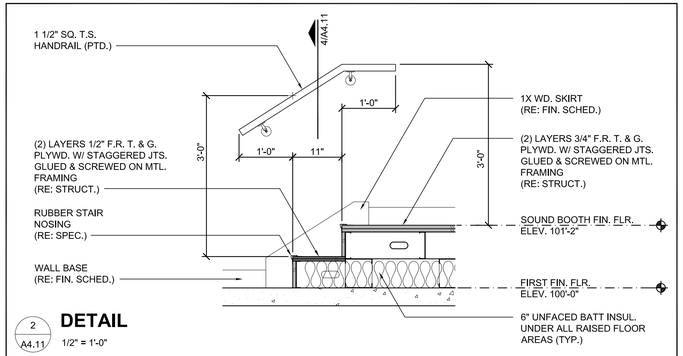

2 A4.11 **DETAIL**
1/2" = 1'-0"

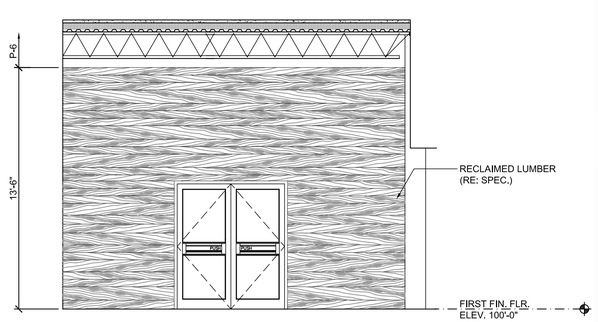

5 A4.11 **INTERIOR ELEVATION**
1/4" = 1'-0"

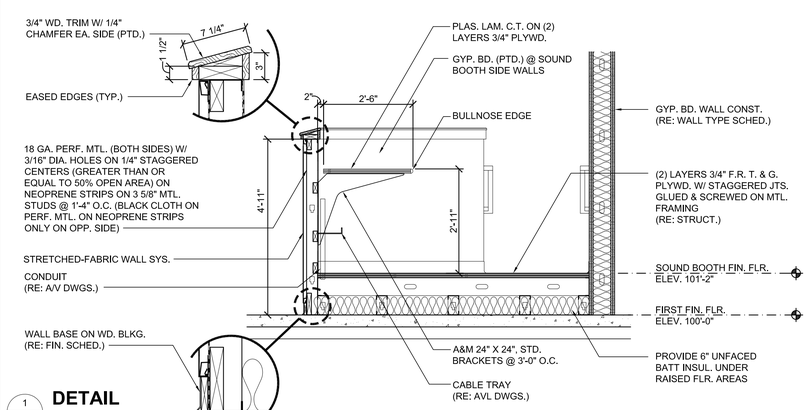

1 A4.11 **DETAIL**
1/2" = 1'-0"

2/05/2020

ARCHITECT: DAVID E. EVANS
ARCHITECT LICENSE NO: A-7731

mantel teter
consulting | architecture | developing
929 Walnut Street, Suite 5104 | Kansas City, Missouri 64106
toll-free: 877.215.5600 | www.manteltteter.com

PHASE II ADDITION TO:
THE SUMMIT
3381 NW CHIPMAN ROAD
LEE'S SUMMIT, MO 64081

PROJECT #: 15-678
ISSUE DATE: 2/05/2020
DRAWN BY:
CHECKED BY: BCR
REVISIONS:

SHEET No.
A4.11
ENLARGED PLANS / INTERIOR ELEVATIONS / DETAILS

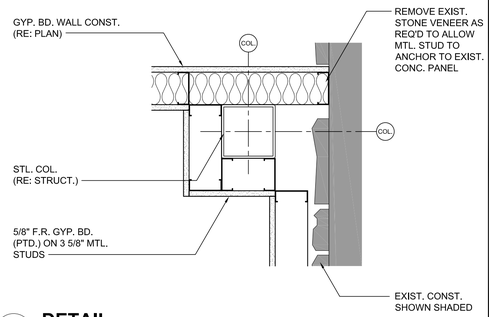

12 A5.10 **DETAIL**
1 1/2" = 1'-0"

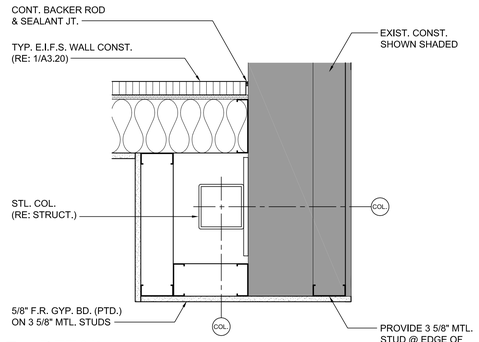

8 A5.10 **DETAIL**
1 1/2" = 1'-0"

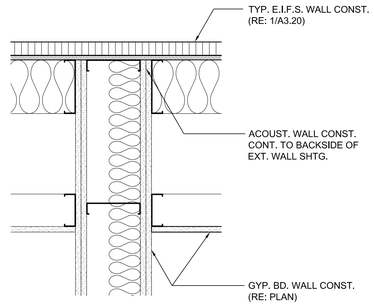

4 A5.10 **DETAIL**
1 1/2" = 1'-0"

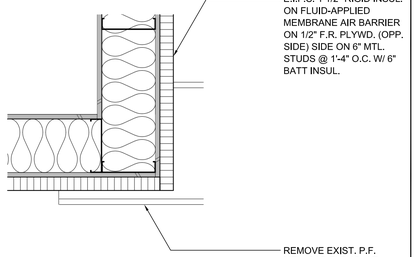

15 A5.10 **DETAIL**
1 1/2" = 1'-0"

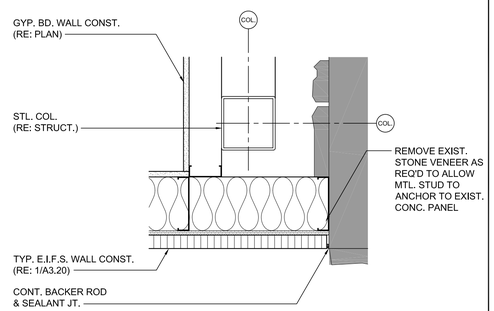

11 A5.10 **DETAIL**
1 1/2" = 1'-0"

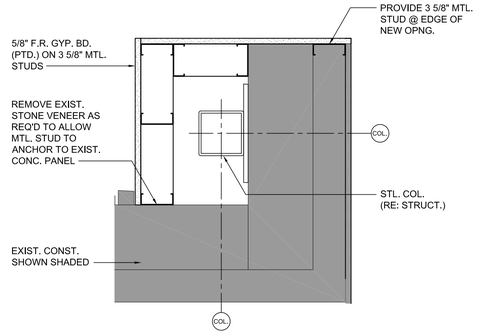

7 A5.10 **DETAIL**
1 1/2" = 1'-0"

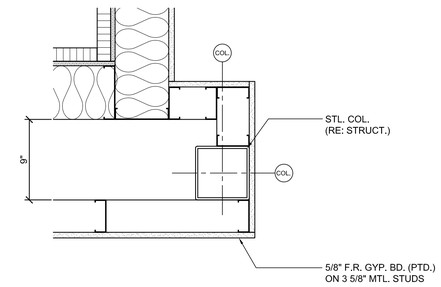

3 A5.10 **DETAIL**
1 1/2" = 1'-0"

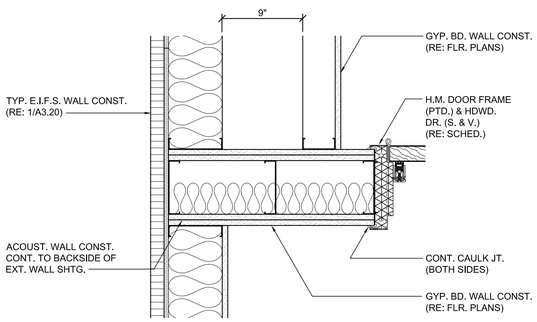

14 A5.10 **DETAIL**
1 1/2" = 1'-0"

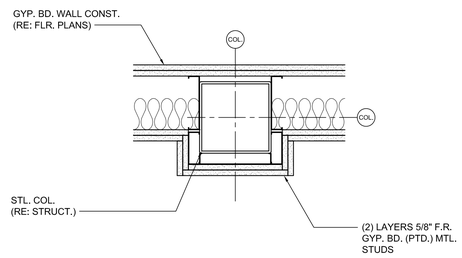

10 A5.10 **DETAIL**
1 1/2" = 1'-0"

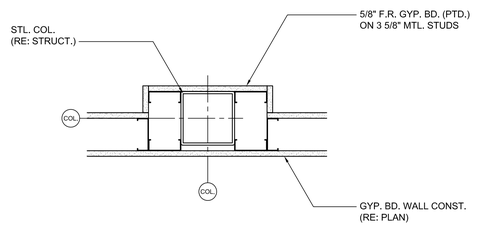

6 A5.10 **DETAIL**
1 1/2" = 1'-0"

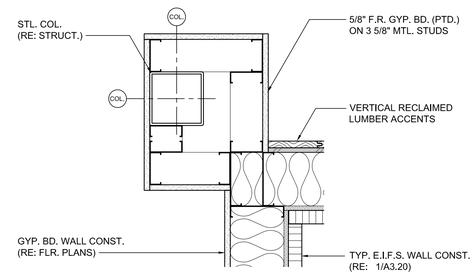

2 A5.10 **DETAIL**
1 1/2" = 1'-0"

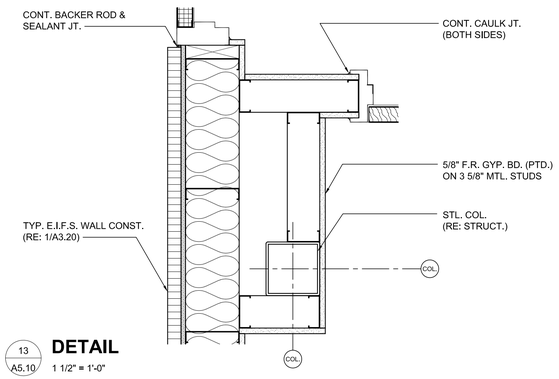

13 A5.10 **DETAIL**
1 1/2" = 1'-0"

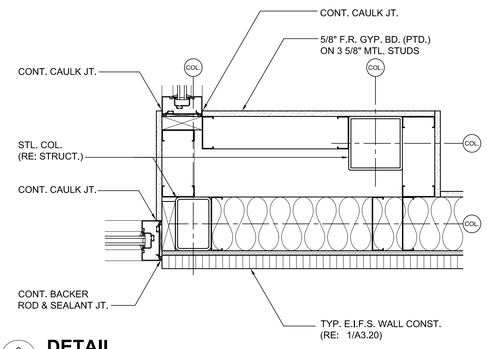

9 A5.10 **DETAIL**
1 1/2" = 1'-0"

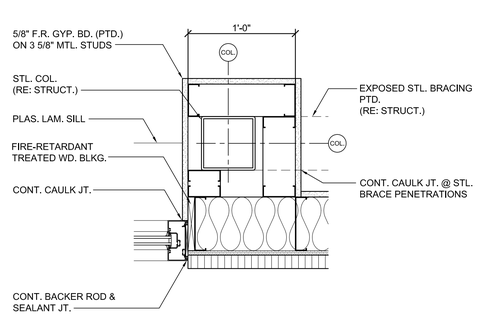

5 A5.10 **DETAIL**
1 1/2" = 1'-0"

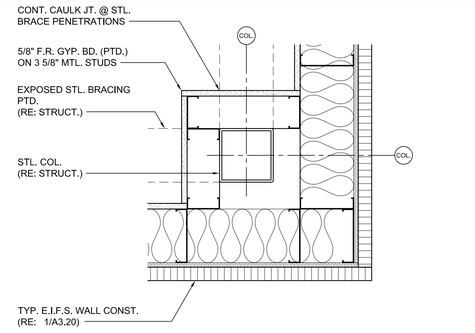

1 A5.10 **DETAIL**
1 1/2" = 1'-0"

STATE OF MISSOURI
NUMBER
A-7731
REGISTERED ARCHITECT

2/05/2020

ARCHITECT: DAVID E. EVANS
ARCHITECT LICENSE NO: A-7731

mantel teter
consulting | architecture | developing
929 Walnut Street, Suite 5104 | Kansas City, Missouri 64106
toll-free: 877.215.5600 | www.manteltteter.com

PHASE II ADDITION TO:
THE SUMMIT
3381 NW CHIPMAN ROAD
LEE'S SUMMIT, MO 64081

PROJECT #: 15-678
ISSUE DATE: 2/05/2020
DRAWN BY:
CHECKED BY: BCR
REVISIONS:

SHEET No.
A5.10
PLAN DETAILS

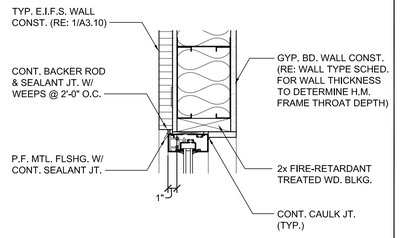

8 A6.10 **DETAIL** (JAMB SIM.)
1 1/2"=1'-0"

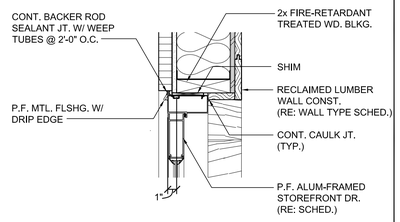

7 A6.10 **DETAIL** (JAMB SIM.)
1 1/2"=1'-0"

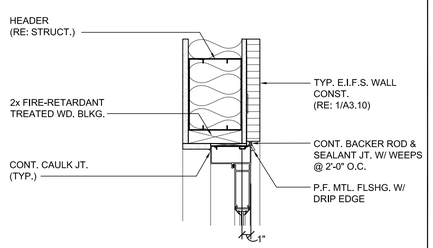

11 A6.10 **DETAIL** (JAMB SIM.)
1 1/2"=1'-0"

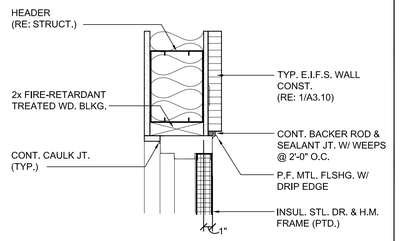

6 A6.10 **DETAIL** (JAMB SIM.)
1 1/2"=1'-0"

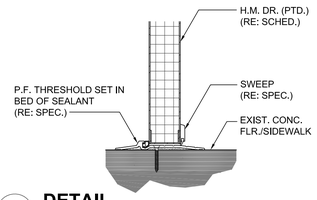

4 A6.10 **DETAIL**
3"=1'-0"

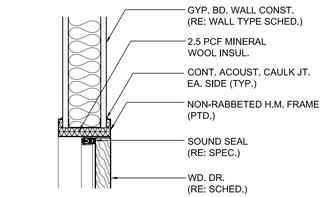

3 A6.10 **DETAIL** (JAMB SIM.)
1 1/2"=1'-0"

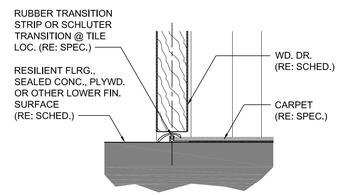

2 A6.10 **DETAIL**
3"=1'-0"

NOTE: COORD. LOC. OF TRANSITION STRIPS @ DRS. W/ AUTOMATIC DOOR BOTTOMS.

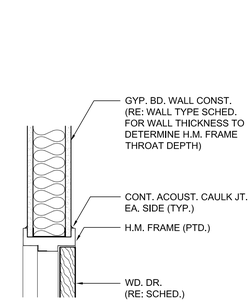

1 A6.10 **DETAIL** (JAMB SIM.)
1 1/2"=1'-0"

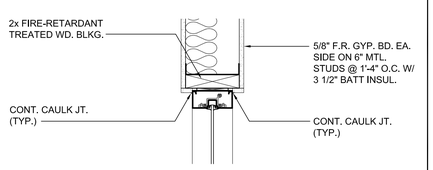

10 A6.10 **DETAIL** (JAMB SIM.)
1 1/2"=1'-0"

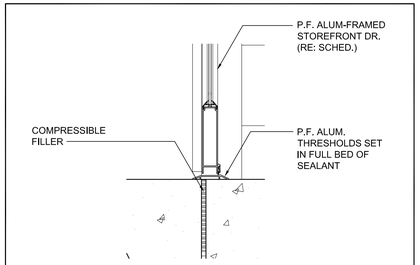

5 A6.10 **DETAIL**
1 1/2"=1'-0"

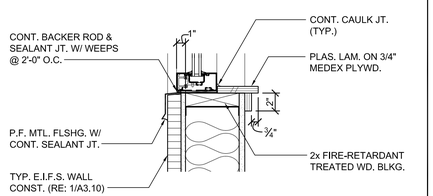

9 A6.10 **DETAIL**
1 1/2"=1'-0"

DOOR & FRAME SCHEDULE

DOOR INFORMATION						FRAMES				F.R.	REMARKS
	No.	SIZE	THKN.	MATL.	ELEV.	MATL.	JAMB	HEAD	SILL		
	200	3'-0" X 7'-0"	1 3/4"	ALUM.	E	ALUM.	10/A6.10	10/A6.10	——		
E	200	3'-0" X 7'-0"	1 3/4"	ALUM.	E	ALUM.	11/A6.10	11/A6.10	5/A6.10		
E	202	3'-0" X 7'-0"	1 3/4"	STL.	H	H.M.	6/A6.10	6/A6.10	4/A6.10		
	204	3'-0" X 7'-0"	1 3/4"	SCWD.	C	H.M.	1/A6.10	1/A6.10	——		
	205	3'-0" X 7'-0"	1 3/4"	SCWD.	C	H.M.	1/A6.10	1/A6.10	——		
	206	A 3'-0" X 7'-0"	1 3/4"	SCWD.	C	H.M.	1/A6.10	1/A6.10	——		
	206	B 3'-0" X 7'-0"	1 3/4"	SCWD.	C	H.M.	1/A6.10	1/A6.10	——		
	207	3'-0" X 7'-0"	1 3/4"	SCWD.	A	H.M.	1/A6.10	1/A6.10	——		
	208	3'-0" X 7'-0"	1 3/4"	SCWD.	C	H.M.	1/A6.10	1/A6.10	——		
	209	3'-0" X 7'-0"	1 3/4"	SCWD.	C	H.M.	1/A6.10	1/A6.10	——		
	210	3'-0" X 7'-0"	1 3/4"	SCWD.	C	H.M.	1/A6.10	1/A6.10	——		
	211	3'-0" X 7'-0"	1 3/4"	SCWD.	C	H.M.	1/A6.10	1/A6.10	——		
	213	3'-0" X 7'-0"	1 3/4"	SCWD.	C	H.M.	1/A6.10	1/A6.10	——		
	214	3'-0" X 7'-0"	1 3/4"	SCWD.	C	H.M.	1/A6.10	1/A6.10	——		
	215	3'-0" X 7'-0"	1 3/4"	SCWD.	A	H.M.	1/A6.10	1/A6.10	2/A6.10		
	216	3'-0" X 7'-0"	1 3/4"	SCWD.	A	H.M.	1/A6.10	1/A6.10	——		
	217	A PR. 3'-0" X 7'-0"	1 3/4"	SCWD.	D	H.M.	3/A6.10	3/A6.10	——		
	217	B PR. 3'-0" X 7'-0"	1 3/4"	SCWD.	B	H.M.	3/A6.10	3/A6.10	——		
	218	3'-0" X 7'-0"	1 3/4"	SCWD.	A	H.M.	3/A6.10	3/A6.10	2/A6.10		
E	218	3'-0" X 7'-0"	1 3/4"	STL.	G	H.M.	6/A6.10	6/A6.10	4/A6.10		
	219	PR. 3'-0" X 7'-0"	1 3/4"	SCWD.	D	H.M.	1/A6.10	1/A6.10	2/A6.10		
E	219	A PR. 3'-0" X 7'-0"	1 3/4"	ALUM.	F	ALUM.	7/A6.10	7/A6.10	5/A6.10		
E	219	B PR. 3'-0" X 7'-0"	1 3/4"	ALUM.	F	ALUM.	11/A6.10	11/A6.10	5/A6.10		
	220	3'-0" X 7'-0"	1 3/4"	SCWD.	B	H.M.	1/A6.10	1/A6.10	——		
	221	3'-0" X 7'-0"	1 3/4"	SCWD.	B	H.M.	1/A6.10	1/A6.10	——		

DOOR & FRAME SCHEDULE NOTES

1. ALL SOLID-CORE WOOD DOORS TO BE 1 3/4" THICK & STAIN-GRADE BIRCH UNLESS NOTED OTHERWISE.
2. WOOD DOORS WITH ACOUSTICAL SEALS SHALL BE SOLID CORE, 5-PLY MINIMUM.
3. WOOD DOORS WITH ACOUSTICAL SEALS SHALL BE INSTALLED IN 16 GAUGE WELDED HOLLOW METAL FRAMES.
4. SEE SECTION 087100 IN THE PROJECT MANUAL FOR ALL DOOR HARDWARE SPECIFICATIONS.
5. ALL DOOR HARDWARE SHALL COMPLY WITH SECTION 404.2.6 OF CABO/ANSI A117.1-2017
6. ALL DOOR HARDWARE SHALL HAVE US26D FINISH.
7. ALL ACOUSTICAL DOOR HARDWARE SHALL BE BY ZERO INTERNATIONAL- NO SUBSTITUTIONS.
8. AT ALL DOORS WITH ACOUSTICAL SEALS, SEALS SHALL BE INSTALLED CONTINUOUS AT HEAD, JAMBS, & SILL. DO NOT CUT SEALS FOR ANY REASON.
9. CAULK HOLLOW METAL FRAMES TIGHT TO GYPSUM BOARD WALLS.
10. HOLD PANIC BAR FROM FRAME STOP TO ACCOMMODATE CONTINUOUS ACOUSTICAL SEALS AT ALL DOORS WITH ACOUSTICAL SEALS & PANIC BARS .
11. THE HOLLOW METAL FRAME JAMBS & HEADS AT DOORS WITH APPLIED ACOUSTICAL SEALS SHALL BE PACKED WITH 2.5 PCF MINERAL WOOL INSULATION PRIOR TO HOLLOW METAL FRAME INSTALLATION.
12. ALL ROOM & DOOR SIGNAGE SHALL BE BY OWNER. GENERAL CONTRACTOR SHALL COORDINATE REQUIREMENTS WITH OWNER'S REPRESENTATIVE.

DOOR ELEVATIONS 1/4" = 1'-0"

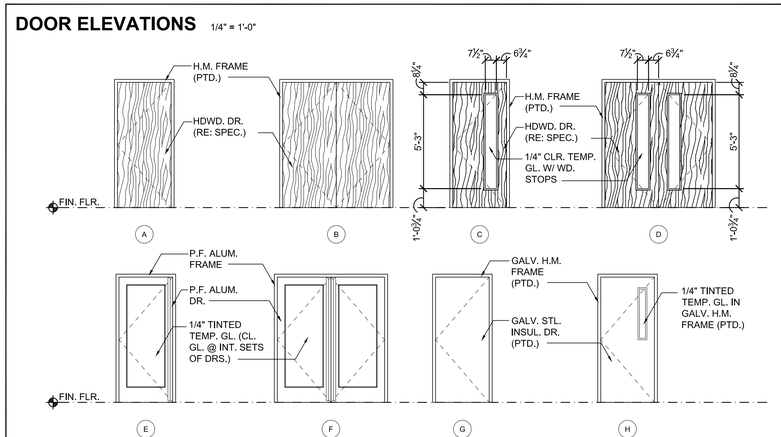

WINDOW ELEVATIONS 1/4" = 1'-0"

GLAZING AND FRAME KEY:

- G1 — 1" INSUL. TINTED GL.
- G2 — 1/4" CLR. GL.
- G3 — 1/4" FROSTED GL.
- F1 — P.F. ALUM. FRAMED S.F.
- F2 — H.M. FRAME (PTD.)

NOTE:
PROVIDE TEMPERED GLASS AT CODE REQUIRED LOCATIONS

NOTE:
"D" WINDOWS IN CHAPEL 218 TO RECEIVE BLACK WINDOW FILM ON INTERIOR FACE OF GLASS

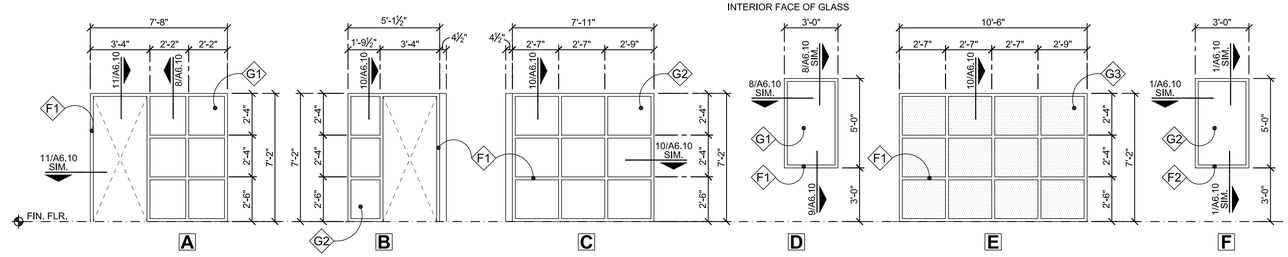

PHASE II ADDITION TO:
THE SUMMIT
3381 NW CHIPMAN ROAD
LEE'S SUMMIT, MO 64081

STATE OF MISSOURI
NUMBER A-7731
REGISTERED ARCHITECT
2/05/2020

ARCHITECT: DAVID E. EVANS
ARCHITECT LICENSE NO: A-7731

mantel teter
consulting | architecture | developing
929 Walnut Street, Suite 5104 | Kansas City, Missouri 64106
toll-free: 877.215.5600 | www.manteltteter.com

PROJECT #: 15-678
ISSUE DATE: 2/05/2020
DRAWN BY:
CHECKED BY: BCR
REVISIONS:

SHEET No.
A6.10
DOOR & FRAME SCHEDULE / WINDOW ELEVATIONS / NOTES / DETAILS

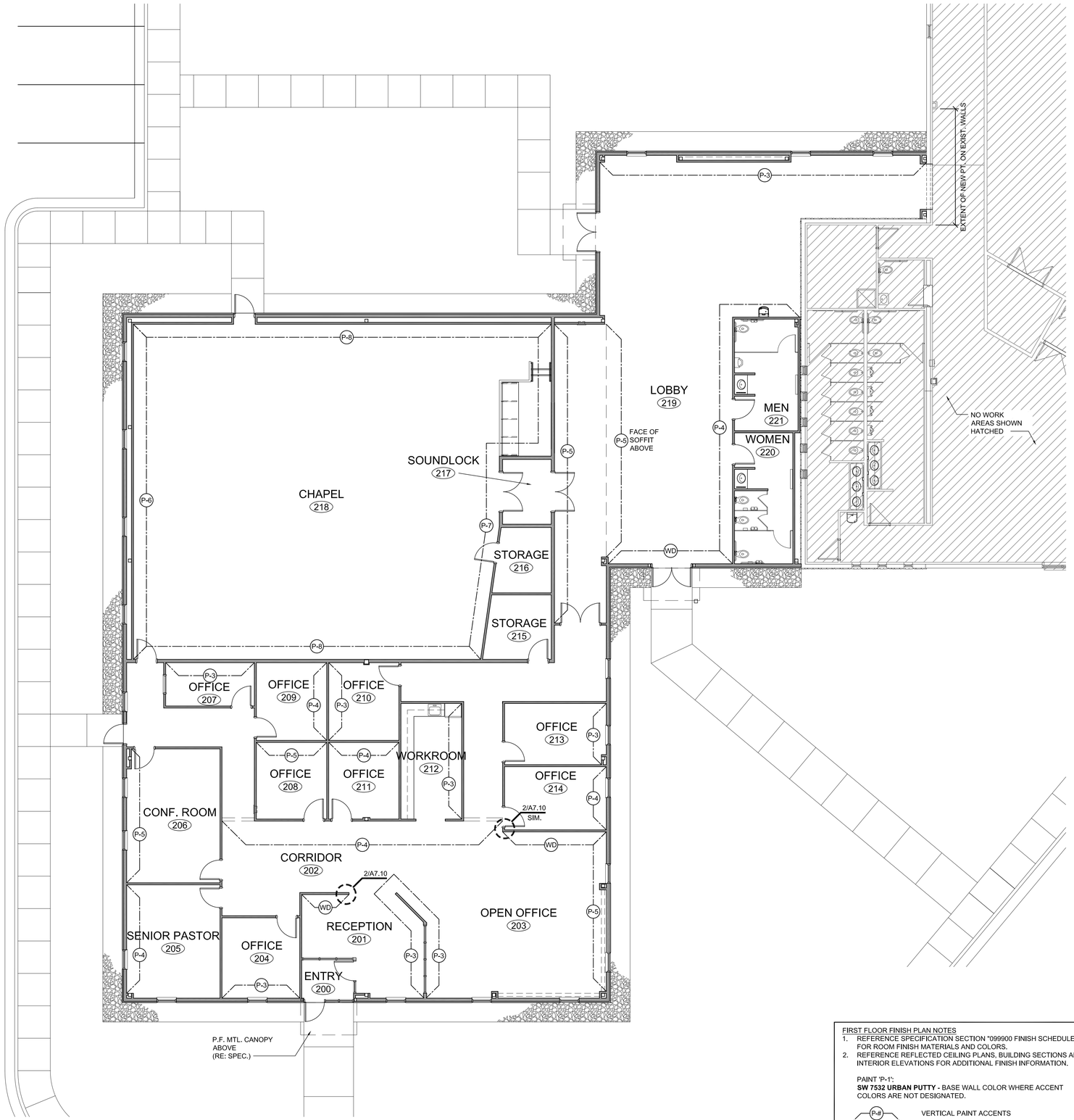

1 A7.10 **FLOOR FINISH PLAN**
1/8"=1'-0"

NORTH

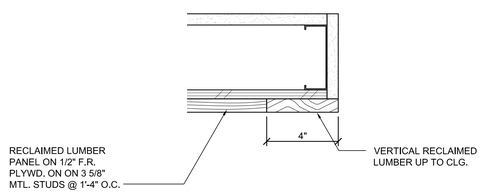

2 A7.10 **DETAIL**
1 1/2"=1'-0"

FIRST FLOOR FINISH PLAN NOTES

1. REFERENCE SPECIFICATION SECTION "099900 FINISH SCHEDULE" FOR ROOM FINISH MATERIALS AND COLORS.
2. REFERENCE REFLECTED CEILING PLANS, BUILDING SECTIONS AND INTERIOR ELEVATIONS FOR ADDITIONAL FINISH INFORMATION.

PAINT 'P-1':
SW 7532 URBAN PUTTY - BASE WALL COLOR WHERE ACCENT COLORS ARE NOT DESIGNATED.

P-#: VERTICAL PAINT ACCENTS

W-#: RECLAIMED LUMBER ACCENTS

STATE OF MISSOURI
NUMBER A-7731
REGISTERED ARCHITECT

2/05/2020

ARCHITECT: DAVID E. EVANS
ARCHITECT LICENSE NO: A-7731

mantel teter
consulting | architecture | developing
929 Walnut Street, Suite 5104 | Kansas City, Missouri 64106
toll-free: 877.215.5600 | www.manteltteter.com

PHASE II ADDITION TO:
THE SUMMIT
3381 NW CHIPMAN ROAD
LEE'S SUMMIT, MO 64081

PROJECT #: 15-678
ISSUE DATE: 2/05/2020
DRAWN BY:
CHECKED BY: BCR
REVISIONS:

SHEET No.
A7.10
FLOOR FINISH PLAN

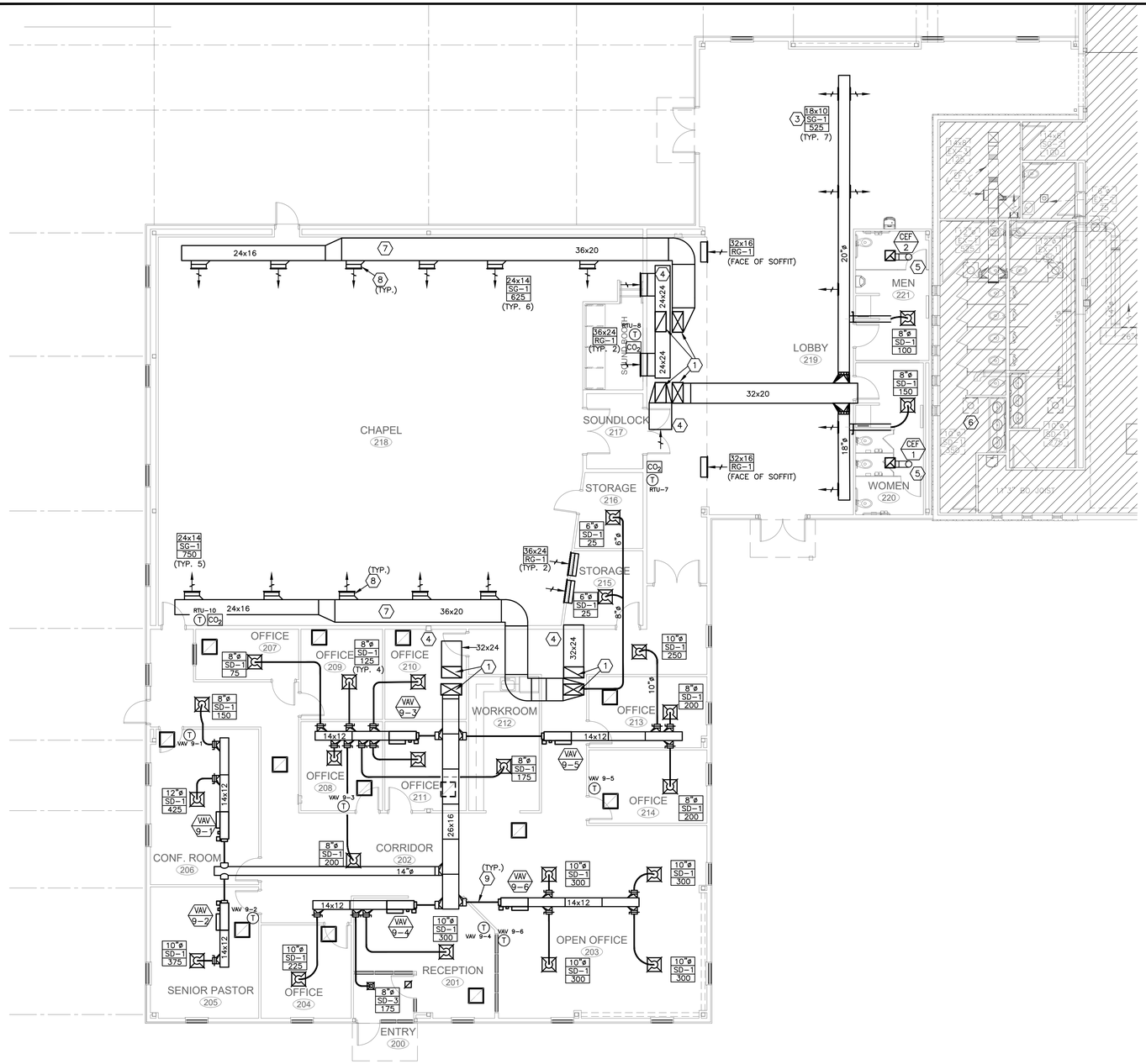

MECHANICAL GENERAL NOTES:

1. ALL MECHANICAL DUCTWORK SHALL BE GALVANIZED STEEL, CONSTRUCTED ACCORDING TO SMACNA STANDARDS.
2. ALL CONCEALED MEDIUM PRESSURE DUCTWORK ROUND AND LOW PRESSURE ROUND SUPPLY AIR DUCTWORK SHALL BE INSULATED WITH 2" THICK, FIBERGLASS DUCT WRAP. ALL SUPPLY AIR, RETURN AIR AND RECTANGULAR DUCTWORK FROM ALL UNITS TO BE INTERNALLY INSULATED WITH 1/2" DUCT LINER. EXPOSED SUPPLY AIR SPIRAL DUCTWORK TO BE UN-INSULATED. RECTANGULAR RETURN AIR DUCTWORK SHALL BE LINED WITH 1/2" DUCT LINER. DUCTWORK DIMENSIONS ARE ACTUAL SIZE AND INCLUDE LINER WHERE APPLICABLE.
3. HVAC CONTRACTOR WILL CHECK EACH SYSTEM FOR PROPER OPERATION UPON START-UP.
4. HVAC CONTRACTOR SHALL HAVE AN INDEPENDENT CONTRACTOR TO TEST & BALANCE HVAC SYSTEM TO THE PROPER AIRFLOWS AND STATIC PRESSURES. A COPY OF THE BALANCING REPORT WILL BE SUBMITTED TO THE OWNER UPON COMPLETION. AIR TO (+/-) 10% , WATER TO (+/-) 5%.
5. FLEXIBLE RUN-OUTS TO BE U.L. LISTED AND HAVE A MAXIMUM LENGTH OF 8'-0". DUCT RUNS TO BE SAME SIZE AS DIFFUSER NECK SIZE SHOWN.
6. AIR HANDLING UNITS SUPPLYING 2,000 CFM OR MORE SHALL HAVE A SMOKE DETECTOR INSTALLED IN THE RETURN AIR DUCTWORK. THE SMOKE DETECTOR SHALL BE INTERLOCKED TO SHUT DOWN ALL SUPPLY FANS UPON ALARM.
7. MAINTAIN MINIMUM 10'-0" FROM ALL PLUMBING VENTS AND EXHAUST VENTS TO ALL OUTSIDE AIR INTAKES.
8. DO NOT INSTALL PIPING OR DUCTWORK OVER ELECTRICAL PANELS.

MECHANICAL PLAN NOTES:

1. FULL SIZE SUPPLY/RETURN AIR DROP FROM PACKAGED RTU ON ROOF.
2. COORDINATE LOCATION OF RTU'S WITH SCREENING SYSTEM TO MAINTAIN MANUFACTURER'S RECOMMENDED CLEARANCES.
3. ANGLE SUPPLY AIR GRILLES DOWN AT 30° TO FLOOR.
4. PROVIDE LINED DUCTED RETURN AIR SYSTEM FOR CHAPEL.
5. PROVIDE 8" EXHAUST VENT THRU ROOF WITH WEATHER CAP.
6. EXISTING DUCTWORK TO REMAIN. (TYP.)
7. SUPPLY AIR DUCTWORK FROM RTU-8 AND RTU-9 SHALL BE MEDIUM PRESSURE FOR FUTURE CONVERSION TO VAV SYSTEM.
8. PROVIDE TAKE-OFFS WITH 12" THROATS. (TYP ALL CHAPEL GRILLES)
9. VAV BOX RUNOUTS TO BE SAME SIZE AS BOX INLETS. (TYP.)

LEGEND:

- SD-1 SUPPLY AIR DIFFUSER – AS SCHEDULED
- RG-1 RETURN AIR GRILLE – AS SCHEDULED
- RG-2 RETURN AIR GRILLE – AS SCHEDULED
- SG-1 SUPPLY AIR GRILLE – AS SCHEDULED
  SG-2 SUPPLY AIR GRILLE – AS SCHEDULED
- RETURN AIR GRILLE – AS SCHEDULED
- T VAV 1-3 THERMOSTAT WITH BOX DESIGNATION. MOUNT AT 48" A.F.F.
- CEF 1 / CEF 2 GREENHECK CEILING MOUNTED EXHAUST FAN 225 CFM @ 0.25" ESP, 120/1 PHASE. INTERLOCK EXHAUST FAN WITH ASSOCIATED RESTROOM LIGHT SWITCH.

1 / M-1.01 FIRST FLOOR MECHANICAL PLAN

SCALE: 1/8" = 1'-0"

NORTH

PHASE II ADDITION TO:
THE SUMMIT
3381 NW CHIPMAN ROAD
LEE'S SUMMIT, MO 64081

PROJECT #: 15-678
ISSUE DATE: 2/05/2020
DRAWN BY:
CHECKED BY:
REVISIONS:

MetroAir

THE SUMMIT CHURCH PHASE#2

LEE'S SUMMIT, MO

SCALE: AS NOTED	DATE: 2/05/2020	DRAWN BY: M.D.K.
APPROVED BY: G.M.M.	DWG # M1	OF 3
100% CD SET		

SHEET No.
M1.01
MECHANICAL FLOOR PLAN

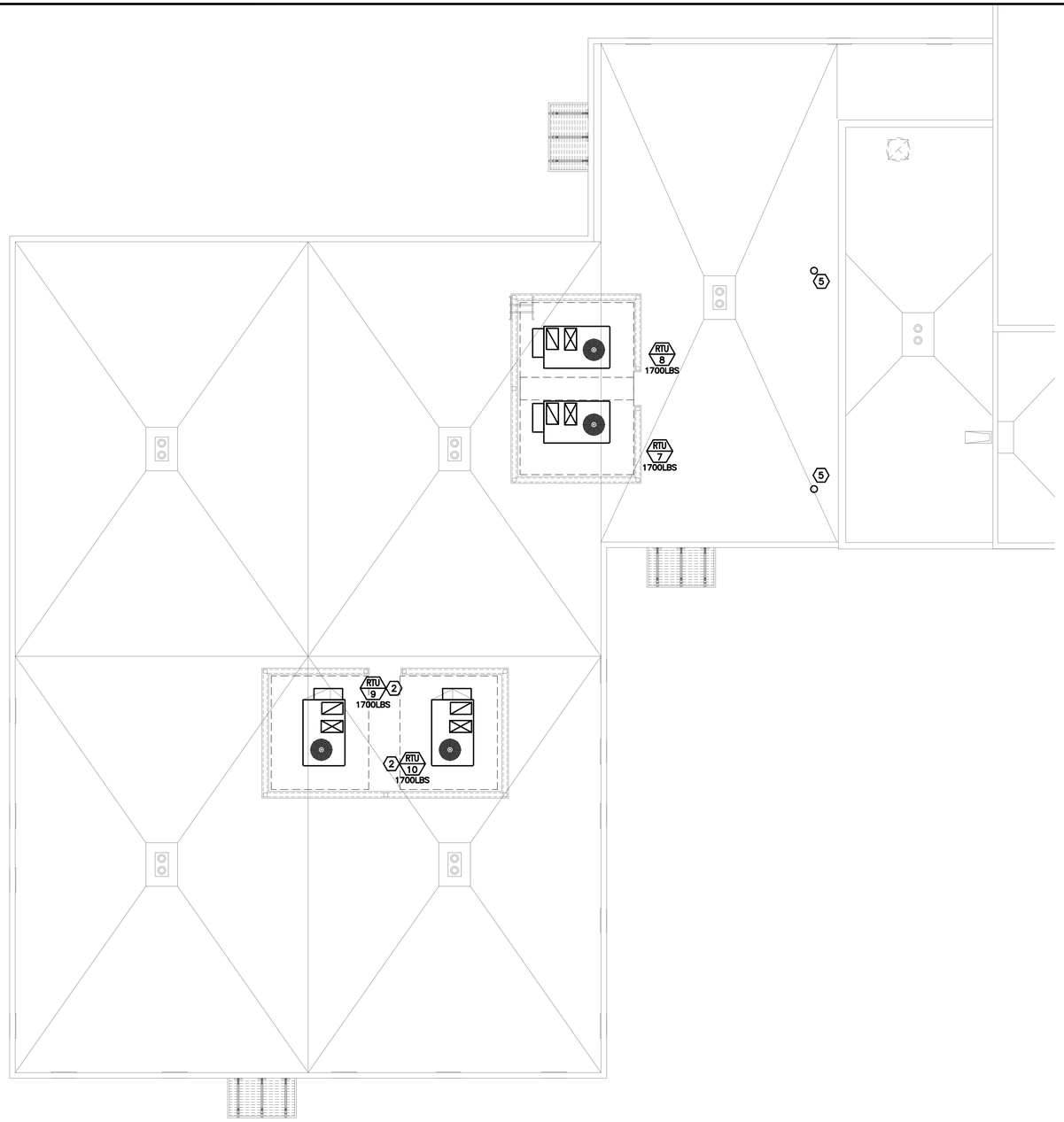

1 / M-1.02 MECHANICAL ROOF PLAN
SCALE: 1/8" = 1'-0"

NORTH

MECHANICAL GENERAL NOTES:

1. ALL MECHANICAL DUCTWORK SHALL BE GALVANIZED STEEL, CONSTRUCTED ACCORDING TO SMACNA STANDARDS.
2. ALL CONCEALED MEDIUM PRESSURE DUCTWORK ROUND AND LOW PRESSURE ROUND SUPPLY AIR DUCTWORK SHALL BE INSULATED WITH 2" THICK, FIBERGLASS DUCT WRAP. ALL SUPPLY AIR, RETURN AIR AND RECTANGULAR DUCTWORK FROM ALL UNITS TO BE INTERNALLY INSULATED WITH 1/2" DUCT LINER. EXPOSED SUPPLY AIR SPIRAL DUCTWORK TO BE UN-INSULATED. RECTANGULAR RETURN AIR DUCTWORK SHALL BE LINED WITH 1/2" DUCT LINER. DUCTWORK DIMENSIONS ARE ACTUAL SIZE AND INCLUDE LINER WHERE APPLICABLE.
3. HVAC CONTRACTOR WILL CHECK EACH SYSTEM FOR PROPER OPERATION UPON START-UP.
4. HVAC CONTRACTOR SHALL HAVE AN INDEPENDENT CONTRACTOR TO TEST & BALANCE HVAC SYSTEM TO THE PROPER AIRFLOWS AND STATIC PRESSURES. A COPY OF THE BALANCING REPORT WILL BE SUBMITTED TO THE OWNER UPON COMPLETION. AIR TO (+/-) 10% , WATER TO (+/-) 5%.
5. FLEXIBLE RUN-OUTS TO BE U.L. LISTED AND HAVE A MAXIMUM LENGTH OF 8'-0". DUCT RUNS TO BE SAME SIZE AS DIFFUSER NECK SIZE SHOWN.
6. AIR HANDLING UNITS SUPPLYING 2,000 CFM OR MORE SHALL HAVE A SMOKE DETECTOR INSTALLED IN THE RETURN AIR DUCTWORK. THE SMOKE DETECTOR SHALL BE INTERLOCKED TO SHUT DOWN ALL SUPPLY FANS UPON ALARM.
7. MAINTAIN MINIMUM 10'-0" FROM ALL PLUMBING VENTS AND EXHAUST VENTS TO ALL OUTSIDE AIR INTAKES.
8. DO NOT INSTALL PIPING OR DUCTWORK OVER ELECTRICAL PANELS.

MECHANICAL PLAN NOTES:

1. FULL SIZE SUPPLY/RETURN AIR DROP FROM PACKAGED RTU ON ROOF.
2. COORDINATE LOCATION OF RTU'S WITH SCREENING SYSTEM TO MAINTAIN MANUFACTURER'S RECOMMENDED CLEARANCES.
3. ANGLE SUPPLY AIR GRILLES DOWN AT 30° TO FLOOR.
4. PROVIDE LINED DUCTED RETURN AIR SYSTEM FOR CHAPEL.
5. PROVIDE 8" EXHAUST VENT THRU ROOF WITH WEATHER CAP.
6. EXISTING DUCTWORK TO REMAIN. (TYP.)
7. SUPPLY AIR DUCTWORK FROM RTU-8 AND RTU-9 SHALL BE MEDIUM PRESSURE FOR FUTURE CONVERSION TO VAV SYSTEM.
8. PROVIDE TAKE-OFFS WITH 12" THROATS. (TYP ALL CHAPEL GRILLES)
9. VAV BOX RUNOUTS TO BE SAME SIZE AS BOX INLETS. (TYP.)

LEGEND:

SD-1 SUPPLY AIR DIFFUSER - AS SCHEDULED

RG-1 RETURN AIR GRILLE - AS SCHEDULED

RG-2 RETURN AIR GRILLE - AS SCHEDULED

SG-1 SUPPLY AIR GRILLE - AS SCHEDULED
SG-2 SUPPLY AIR GRILLE - AS SCHEDULED

RETURN AIR GRILLE - AS SCHEDULED

T / VAV 1-3 THERMOSTAT WITH BOX DESIGNATION. MOUNT AT 48" A.F.F.

CEF 1 / CEF 2 GREENHECK CEILING MOUNTED EXHAUST FAN 225 CFM @ 0.25" ESP, 120/1 PHASE. INTERLOCK EXHAUST FAN WITH ASSOCIATED RESTROOM LIGHT SWITCH.

PHASE II ADDITION TO:
THE SUMMIT
3381 NW CHIPMAN ROAD
LEE'S SUMMIT, MO 64081

PROJECT #: 15-678
ISSUE DATE: 2/05/2020
DRAWN BY:
CHECKED BY:
REVISIONS:

MetroAir

THE SUMMIT CHURCH PHASE#2
LEE'S SUMMIT, MO

SCALE: AS NOTED	DATE: 2/05/2020	DRAWN BY: M.D.K.
APPROVED BY: G.M.M.	DWG # M2	OF 3
100% CD SET		

SHEET No.
M1.02
MECHANICAL ROOF PLAN

SECTION 1500 - MECHANICAL GENERAL PROVISIONS

1.1 DESCRIPTION:

A. Division 15 shall be governed by all applicable provisions of the Contract Documents. The Mechanical Contractor shall furnish, install and connect all materials, equipment, apparatus, mechanical systems and incidentals required for complete and working installation. The Contractor shall supply all necessary labor, equipment, tools, insurance, taxes services; and The Contractor shall assume full responsibility for all obligations associated with completion of mechanical work as provided by the Contract Documents.

1.2 STANDARDS, REGULATIONS AND CODES:

A. The work shall comply with the edition of the applicable standards, regulations and codes currently in force of all State and location authorities having jurisdiction. Where quantities, sizes, or other requirements indicated on the drawings or herein specified are in excess of the standard or code requirements, the specifications and/or drawings shall govern. In the absence of other applicable local codes, acceptable to the Architect/Engineer, the Uniform Plumbing and Mechanical Codes shall apply to this work.

B. The Contractor shall comply with rules and regulations of public utilities and municipal departments affected by connections of services. The Contractor shall pay all fees associated there with.

C. The Mechanical Contractor shall be licensed to perform mechanical work in the municipality in which the project is located.

D. All products and types of construction shall meet or exceed the latest edition of applicable standards of manufacturer, testing, performance and installation.

1.3 LOCAL CONDITIONS:

A. The Contractor shall carefully examine the local conditions and existing installations and shall thoroughly familiarize himself with all existing conditions which may affect his work. The Contractor shall locate all existing utilities and protect them during the execution of the work.

B. The Contractor shall examine the Architectural, Mechanical and Electrical Drawings and Specifications to familiarize himself with the type of construction, materials, and equipment to be used for all work and how it will affect the installation of his contract.

1.4 CUTTING AND PATCHING:

A. All necessary cutting, drilling and patching shall be provided by this Contractor. Structural members shall not be disturbed without prior approval of the Architect. All areas disturbed by work performed under this Contract shall be neatly repaired and refinished to the condition of adjoining surfaces in a manner suitable to the Architect.

1.5 OPERATION DURING CONSTRUCTION:

A. The Contractor is responsible for the installation and operation, service and maintenance of all new equipment during construction and prior to acceptance by the Owner of the completed project. Warranty periods shall not commence until final acceptance by the Owner. All temporary conditioning to be reviewed with the mechanical contractor for potential costs, filter changes and extended warranties prior to utilizing the new mechanical system.

1.6 SAFETY REGULATIONS:

A. All Mechanical work shall be performed in compliance with all applicable governing safety regulations, including OSHA regulations. Provide safety lights, guards and signs required.

1.7 HOUSEKEEPING:

A. The Contractor shall be responsible for keeping stocks of material and equipment stored on the premises in a neat and orderly manner.

B. The Contractor shall clean and maintain his portion of the work as specified in the General Conditions.

C. The Contractor shall remove from the premises all waste material present as a result of his work.

1.8 GRAPHIC REPRESENTATION AND JOB CONDITIONS:

A. The drawings shall serve as working drawings for the general layout of the various items of equipment; are diagrammatic unless specifically dimensioned; and do not necessarily indicate every required item.

B. The Architectural drawings take precedence over the mechanical drawings in the representation of the general construction work.

C. Arrange work in a neat, well organized manner. Coordinate work with other trades involved.

1.9 GUARANTEES:

A. The Contractor shall guarantee all work performed and materials and equipment furnished under this contract, against defects in materials and workmanship for a period of one year from the Date of the Owner's Final Acceptance of the Work, or as noted in each section.

1.10 MOTORS AND CONTROLS:

A. All motors furnished under this specification shall be recognized manufacturer, of adequate capacity for the loads involved. All motors shall conform to the standards of manufacturer and performance of the National Electrical Manufacturers Association as shown in their latest publications.

1.11 PIPING IN ELECTRICAL ROOMS:

A. No piping except specifically noted otherwise will be permitted in electrical rooms. In rooms, where piping is indicated over electrical equipment, a suitable galvanized sheetmetal pan or gutter piped to the drainage system shall be provided.

END OF SECTION

SECTION 15100 - HEATING, VENTILATION AND AIR CONDITIONING

1.1 SCOPE:

A. The work included under this contract consists of providing all labor, materials, tools, transportation, services, etc., necessary to complete the installation of the heating, ventilating, and air conditioning systems and other items herein listed and as described in these specifications, as illustrated in the accompanying drawings or as directed by the Architect.

1.2 SHEET METAL:

A. Provide ductwork shown with necessary dampers. Construction of new galvanized prime grade steel sheets per ASHRAE and SMACNA Standards. Provide round or rectangular duct as indicated. Fabricate for the pressure and SMACNA seal class required.

B. Flexible duct shall be Wiremold WCK or acceptable equal maximum length shall be 8' - 0".

C. All duct sizes shown include liner as noted.

D. Duct System shall have no objectionable noise throughout. Including takeoffs, dampers, and turning vanes.

1.3 GRILLES, REGISTERS, INLETS AND OUTLETS:

A. All supply grilles, registers and diffusers shall be as scheduled on the drawings and shall be ADC rated.

1.4 DUCTWORK ACCESSORIES:

A. Provide single thickness turning vanes in all supply duct turns.

B. Provide duct access doors for all internal duct mounted equipment.

C. Provide 45° take-off fittings with volume damper for all round takeoffs to diffusers.

D. Provide dampers where shown and required. Balance and control dampers shall be opposed blade except air mixing dampers shall be parallel blade.

1.5 AIR CONDITIONING UNITS:

A. Air conditioning units shall be as scheduled. Units shall be standard catalogued products with the appropriate approval or certification by AGA, ARI and UL. Efficiencies shall conform to ASHRAE 90 standards.

1.6 FANS:

A. Fans with accessories shall be as scheduled and shall be AMCA rated.

1.7 VIBRATION ISOLATION:

A. Duct flexible connection shall be non-combustible, 16 ounce canvas. Piping flexible connection shall be Flexonics 401H or acceptable equal.

1.8 MISCELLANEOUS MECHANICAL EQUIPMENT:

A. Provide constant, variable volume and/or fan powered boxes and accessories as scheduled. Acceptable manufacturers are Trane, E.H. Price, Titus or acceptable equal.

B. 1.9 CLEANING:

A. Clean system by operating at least three hours prior to final acceptance with temporary filters. Remove all filters and replace with clean.

B. Use precleaned precharged refrigerant tube. Clean per manufacturers recommendations.

1.10 TESTING AND ADJUSTING:

A. Contractor shall operate and test the air conditioning and ventilation systems and instruct the Owner in its operation. Perform a series of general capacity and operating tests. The tests shall demonstrate the specified capacities of various pieces of equipment.

END OF SECTION

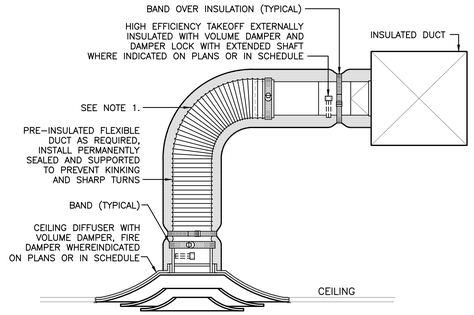

NOTES:
1. EXTEND HARD METAL DUCT SO THAT MAXIMUM FLEXIBLE DUCT LENGTH DOES NOT EXCEED 8'-0". PROVIDE RIGID 90° ELBOW WHERE REQUIRED TO KEEP FLEXIBLE DUCT WITHIN 8'-0" LENGTH LIMITATION.

1 LAY-IN CEILING DIFFUSER DETAIL
NO SCALE

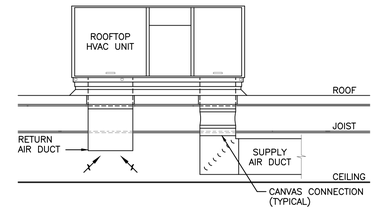

NOTES
1. PROVIDE OPENING THROUGH ROOF AND ROOF DECK INSULATION NO LARGER THAN REQUIRED TO ALLOW DUCTS TO PASS THROUGH. REFER TO PLANS FOR DUCT SIZES. TRANSITION AS REQUIRED IN ROOF CURB TO RTU SUPPLY AND RETURN OPENINGS.

2 ROOFTOP UNIT WITH DUCTWORK DETAIL
NO SCALE

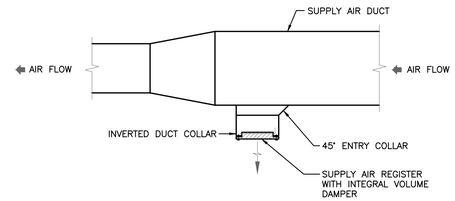

3 DUCT MOUNTED REGISTER DETAIL
NO SCALE

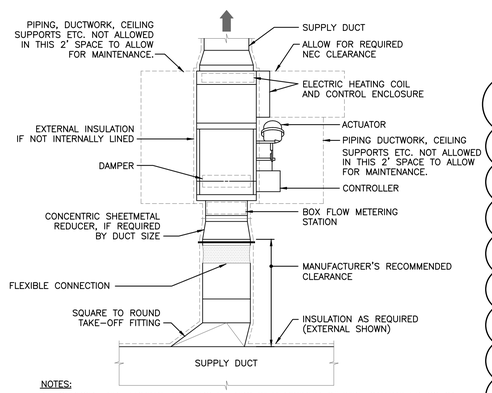

NOTES:
1. SUPPORT AIR TERMINAL UNIT, BOTH ENDS WITH MINIMUM 2" WIDE GALVANIZED 22 GA. HANGER STRAPS.
2. INSTALL BOX NOT MORE THAN 3 FEET ABOVE THE CEILING TO ENABLE ACCESS FOR MAINTENANCE.

4 VARIABLE AIR VOLUME BOX WITH ELECTRIC REHEAT COIL DETAIL
NO SCALE

ALTERNATE OPTION

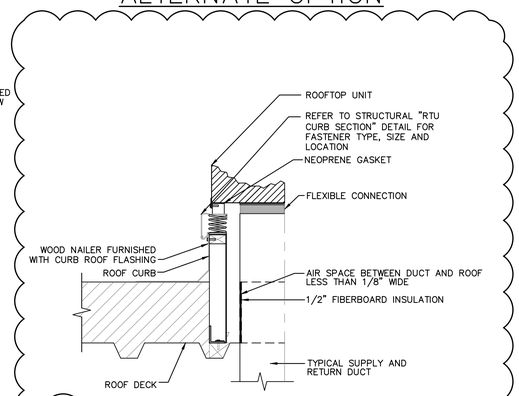

5 ROOF CURB AND DUCT ISOLATION DETAIL
NO SCALE

OUTSIDE AIR CALCULATIONS

UNIT SERVED	OCCUPANCY CLASSIFICATION	AREA (SQ. FT.)	PEOPLE PER 1,000 SQ. FT.	FIXED SEATING QUANTITY	QUANTITY OF PEOPLE	REQUIRED OUTSIDE AIR PER PERSON	REQUIRED OUTSIDE AIR PER SQ. FT.	TOTAL REQUIRED (CFM)	NOTES
RTU-7	LOBBY	2,000	33	—	67	7.5	0.06	620	A
	RESTROOMS	350	—	—	—	—	0.06	21	A
	CORRIDOR	165	—	—	—	—	0.06	10	A
						REQUIRED VENTILATION		650 CFM	
RTU-8	CHAPEL	1,550	120	150	186	5	0.06	843	A, B
						REQUIRED VENTILATION		843 CFM	
RTU-9	CONFERENCE	300	50	—	15	10	0.06	168	A
	CORRIDOR	950	—	—	—	—	0.06	57	A
	WORKROOM	170	25	—	4	5	0.06	31	A
	OFFICE	2,330	7	—	16	5	0.06	221	A
						REQUIRED VENTILATION		478 CFM	
RTU-10	CHAPEL	1,550	120	150	186	5	0.06	843	A, B
	STORAGE	200	—	—	—	—	0.12	24	A
						REQUIRED VENTILATION		867 CFM	

NOTES:
A. VALUES TAKEN FROM ASHRAE 62.1 2007 "VENTILATION FOR ACCEPTABLE INDOOR AIR QUALITY."
B. VENTILATION IS BASED ON TOTAL QUANTITY OF PEOPLE TAKEN FROM NUMBER OF ACTUAL SEATING SHOWN ON ARCHITECTURAL FLOOR PLAN.

PACKAGED ROOFTOP UNIT (DX COOLING/GAS HEAT)

MARK	MANUFACTURER	MODEL	NOMINAL TONNAGE	SERVICE	UNIT TYPE	SUPPLY FAN CFM*	SUPPLY FAN ESP (IN)	SUPPLY FAN HP	SUPPLY FAN VFD (Y/N)	COOLING COIL SA (DB/WB)	COOLING COIL TH (MBH)	COOLING COIL SH (MBH)	GAS HEATING INPUT (MBH)	GAS HEATING OUTPUT (MBH)	GAS HEATING STAGES	MINIMUM VENTILATION (CFM)	DESIGN/MAX VENTILATION (CFM)	ELECTRICAL MCA	ELECTRICAL MOCP	ELECTRICAL V/PH	ELECTRICAL DISC. TYPE	WEIGHT (LBS)	MIN. EER	NOTES
RTU-7	TRANE	YSC120F4RMA	10	LOBBY	SZVAV	4,000	1.00	3.0	N	59/57	115	90	200.0	160.0	2	200	650	30	30	460/3	NF	1,700	10.0	A - J
RTU-8	TRANE	YSC120F4RMA	10	CHAPEL	SZVAV	4,000	1.00	3.0	N	59/57	115	90	200.0	160.0	2	200	850	30	30	460/3	NF	1,700	10.0	A - J
RTU-9	TRANE	YSC120F4RMA	10	OFFICE	VAV	4,000	2.00	3.0	N	59/57	115	90	200.0	160.0	2	500	500	30	30	460/3	NF	1,700	10.0	A - H
RTU-10	TRANE	YSC120F4RMA	10	CHAPEL	SZVAV	4,000	1.00	3.0	N	59/57	115	90	200.0	160.0	2	200	850	30	30	460/3	NF	1,700	10.0	A - J

NOTES:
A. EQUIPMENT SIZED FOR 100 DEGREE F AMBIENT TEMPERATURE.
B. PROVIDE WITH 2", 30% EFFICIENT PLEATED THROWAWAY AIR FILTERS.
C. PROVIDE WITH MANUFACTURERS STANDARD 14" ROOF CURB.
D. PROVIDE WITH FACTORY MOUNTED NON-FUSED DISCONNECT SWITCH AND HAIL GUARDS.
E. PROVIDE WITH FACTORY MOUNTED ENTHALPY ECONOMIZER WITH BAROMETRIC RELIEF DAMPER.
F. PROVIDE WITH CONTROLS CARD FOR INTEGRATION INTO DDC CONTROL SYSTEM.
G. RETURN AIR SMOKE DETECTOR FURNISHED AND INSTALLED BY OTHERS.
H. PROVIDE WITH CONTROLS FOR SINGLE ZONE VAV OR VAV OPERATION AS NOTED
J. PROVIDE WITH CO2 SENSOR (RETURN AIR DUCT MOUNTED OR WALL MOUNTED PER PLANS) TO MODULATE OUTSIDE AIR FROM MINIMUM TO MAXIMUM SCHEDULED AIRFLOW.
*UNITS SIZED FOR NOMINAL AIRFLOW BUT SHOULD BE BALANCED ACCORDING TO AIRFLOWS NOTED ON DRAWINGS

GRILLE, REGISTER & DIFFUSER SCHEDULE

MARK	MANUFACTURER	MODEL	TYPE	SIZE	MOUNTING	FINISH	MATERIAL	NOTES
SD-1	PRICE	SCD	SQUARE CONE	24" x 24"	LAY-IN	WHITE	STEEL	
SD-2	PRICE	SCD	SQUARE CONE	24" x 24"	SURFACE	WHITE	STEEL	A, B
SD-3	PRICE	SCD	SQUARE CONE	12" x 12"	SURFACE	WHITE	STEEL	
SD-4	PRICE	SCD	SQUARE CONE	12" x 12"	LAY-IN	WHITE	STEEL	
LSD-1	PRICE	TBD-3	LINEAR SLOT	(3) 1" SLOTS - 48" LONG	SURFACE	WHITE	STEEL	
SG-1	PRICE	SDG	SPIRAL MOUNT	AS NOTED	DUCT	MILL	STEEL	A, C
SG-2	PRICE	520DL	WALL MOUNT	AS NOTED	WALL/DUCT	WHITE	STEEL	A
RG-1	PRICE	PDDR	PERFORATED	24" x 24"	LAY-IN	WHITE	STEEL	
RG-2	PRICE	PDDR	PERFORATED	24"x12"	LAY-IN	WHITE	STEEL	
RG-3	PRICE	530RL	GRILLE	AS NOTED	SURFACE/WALL	WHITE	STEEL	A
EX-1	PRICE	PDDR	PERFORATED	24" x 24"	LAY-IN	WHITE	STEEL	
EX-2	PRICE	PDDR	PERFORATED	12" x 12"	LAY-IN	WHITE	STEEL	
EX-3	PRICE	530RL	PERFORATED	AS NOTED	SURFACE/WALL	WHITE	STEEL	

NOTES:
A. PROVIDE WITH DAMPER OPERABLE FROM FACE OF DEVICE.
B. PROVIDE WITH SURFACE MOUNT FRAME KIT FOR MOUNTING IN HARD CEILING.
C. PROVIDE WITH OPPOSED BLADE DAMPER AND MILL FINISH.

VARIABLE AIR VOLUME UNIT SCHEDULE (ELECTRIC HEAT)

MARK	SERVED FROM	MANUFACTURER	MODEL	INLET SIZE (IN)	BOX SIZE	DUCT OUTLET	MAX. COOLING AIRFLOW (CFM)	MIN. COOLING AIRFLOW (CFM)	HEATING AIRFLOW (CFM)	FAN AIRFLOW (CFM)	FAN HP	CONTROLS/HEAT ACCESS	ELECTRIC HEATING COIL EAT	LAT	KW	STEPS	V/PH	NOTES
VAV 9-1	RTU-9	TRANE	VCEF	8	—	11x10	575	105	350	—	—	LEFT	50	100	6.0	2	460/3	A - E
VAV 9-2	RTU-9	TRANE	VCEF	8	—	11x10	400	105	280	—	—	RIGHT	50	100	5.0	2	460/3	A - E
VAV 9-3	RTU-9	TRANE	VCEF	10	—	14x12	950	165	570	—	—	LEFT	50	100	10.0	2	460/3	A - E
VAV 9-4	RTU-9	TRANE	VCEF	10	—	14x12	700	165	530	—	—	LEFT	50	100	9.0	2	460/3	A - E
VAV 9-5	RTU-9	TRANE	VCEF	8	—	11x10	600	105	450	—	—	RIGHT	50	100	8.0	2	460/3	A - E
VAV 9-6	RTU-9	TRANE	VCEF	10	—	14x12	1200	165	720	—	—	RIGHT	50	100	12.0	2	460/3	A - E

NOTES:
A. HEATING COIL CAPACITY BASED ON DISCHARGE AIR TEMPERATURE AS SCHEDULED.
B. INSTALL FLEXIBLE DUCT CONNECTOR AT INLET CONNECTION.
C. PROVIDE INTEGRAL DISCONNECT SWITCH AND CONTROL POWER TRANSFORMER.
D. PROVIDE WITH STANDARD LINER INSULATION.
E. PROVIDE FACTORY-INSTALLED, PRESSURE INDEPENDENT, DDC CONTROL PACKAGE FURNISHED BY TRANE WITH WIRELESS THERMOSTAT.

PHASE II ADDITION TO:
THE SUMMIT
3381 NW CHIPMAN ROAD
LEE'S SUMMIT, MO 64081

PROJECT #: 15-678
ISSUE DATE: 2/05/2020
DRAWN BY:
CHECKED BY:
REVISIONS:

MetroAir
THE SUMMIT CHURCH PHASE#2
LEE'S SUMMIT, MO
SCALE: AS NOTED | DATE: 2/05/2020 | DRAWN BY: M.D.K.
APPROVED BY: G.M.M. | DWG # M3 OF 3
100% CD SET

SHEET No.
M2.01
MECHANICAL SCHEDULES

MECHANICAL SPECIFICATIONS

1. GENERAL PROVISIONS:
   - A. PROVIDE ALL LABOR, MATERIALS, EQUIPMENT, NECESSARY FOR THE COMPLETE INSTALLATION OF THE PLUMBING AND MECHANICAL SYSTEMS OUTLINED.
   - B. OBTAIN ALL PERMITS, FEES, LICENSES, INSPECTIONS, AND CERTIFICATES OF COMPLIANCE OR APPROVAL AS REQUIRED BY THE AUTHORITIES.
   - C. ALL WORK SHALL BE PERFORMED IN ACCORDANCE WITH ALL APPLICABLE LAWS, CODES AND REGULATIONS OF THE GOVERNMENTAL BODIES HAVING JURISDICTION OVER THE SITE.
   - D. ALL TESTING REQUIRED BY AUTHORITIES SHALL BE CONSIDERED PART OF THIS WORK.
   - E. DURING CONSTRUCTION, ALL FIXTURES, EQUIPMENT, PIPE, DUCT, ETC. SHALL BE COVERED, PLUGGED, OR CAPPED AS REQUIRED TO KEEP CLEAN AND UNDAMAGED. ALL DAMAGED ITEMS SHALL BE RESTORED TO ORIGINAL CONDITION OR REPLACED. ALL PROTECTIVE COVERING SHALL BE REMOVED BEFORE FINAL ACCEPTANCE.
   - F. PROVIDE ALL NECESSARY CUTTING AND PATCHING OF WALLS, FLOORS, CEILINGS, AND ROOFS AS NECESSARY. PATCH AROUND ALL OPENINGS SHALL MATCH ADJACENT AREA. COORDINATE ALL ROOFING WORK WITH OWNER OR RESPONSIBLE PARTY, SO THAT THE EXISTING ROOFING WARRANTY WILL BE MAINTAINED.
   - G. CONTRACTOR SHALL GUARANTEE ALL WORK AND MATERIALS AGAINST DEFECTS FOR A PERIOD OF ONE YEAR FROM FINAL ACCEPTANCE.
2. OPERATION AND MAINTENANCE MANUALS:
   - A. DURING THE COURSE OF CONSTRUCTION, COLLECT AND COMPILE OPERATING INSTRUCTIONS, WIRING DIAGRAMS, CATALOG CUTS, LUBRICATION AND PREVENTIVE MAINTENANCE INSTRUCTIONS, PARTS LISTS, ETC. FOR ALL EQUIPMENT FURNISHED UNDER THIS CONTRACT.
   - B. ALL LITERATURE AND INSTRUCTIONS SHIPPED WITH THE EQUIPMENT SHALL BE SAVED FOR INCLUSION IN THE OPERATION AND MAINTENANCE MANUALS.
   - C. ALL LITERATURE LISTED ABOVE AND ALL PAPERS LISTING WARRANTIES, ETC. SHALL BE BOUND IN A 3-RING BINDER AND LABELED WITH THE PROJECT NAME, ADDRESS, ARCHITECT, ENGINEER, CONTRACTORS, ETC.
3. MANUFACTURERS:
   - A. MANUFACTURERS, MODEL NUMBERS, ETC. INDICATED OR SCHEDULED ON THE DRAWINGS SHALL BE INTERPRETED AS HAVING ESTABLISHED A STANDARD OF QUALITY AND SHALL NOT BE CONSTRUED AS LIMITING COMPETITION. ARTICLES, FIXTURES, ETC. OF EQUAL QUALITY BY MANUFACTURERS SHALL BE ACCEPTABLE, SUBJECT TO STRUCTURAL AND ELECTRICAL CONSTRAINTS OF THE PROJECT DESIGN, UNLESS NOTED OTHERWISE.
4. MOTORS:
   - A. PROVIDE THERMAL OVERLOAD PROTECTION FOR EACH MOTOR PROVIDED BY THIS WORK.
5. TESTING, BALANCING, AND CLEANING:
   - A. ALL PIPING SHALL BE TESTED FOR LEAKS BEFORE BEING CONCEALED IN WALL CONSTRUCTION OR COVERED WITH INSULATION.
   - B. SEWER AND VENT PIPING SHALL BE HYDROSTATICALLY TESTED WITH NO LESS THAN 10 FEET OF HEAD FOR A PERIOD OF NOT LESS THAN 15 MINUTES, PER THE LOCAL PLUMBING CODE, WITH NO LEAKS.
   - C. DOMESTIC WATER PIPING SHALL BE HYDROSTATICALLY TESTED AT A PRESSURE OF NOT LESS THAN 1-1/2 TIMES THE OPERATING PRESSURE, BUT NOT LESS THAN 60 PSI, FOR A PERIOD OF NOT LESS THAN 2 HOURS, WITH NO LEAKS.
   - D. NATURAL GAS PIPING SHALL BE PNEUMATICALLY TESTED AT A PRESSURE OF NOT LESS THAN 1-1/2 TIMES THE OPERATING PRESSURE, BUT NOT LESS THAN 50 PSI, FOR A PERIOD OF NOT LESS THAN 2 HOURS, WITH NO LEAKS.
   - E. PIPING SHALL BE BALANCED BY QUALIFIED BALANCING PERSONNEL WHO HAVE PREVIOUS EXPERIENCE WITH BALANCING PROCEDURES.
   - F. BEFORE DOMESTIC WATER PIPING IS PLACED IN SERVICE, ALL DOMESTIC WATER DISTRIBUTION SYSTEMS, INCLUDING THOSE FOR COLD WATER AND HOT WATER SYSTEMS, SHALL BE FLUSHED, STERILIZED AND CHLORINATED IN ACCORDANCE WITH HEALTH DEPARTMENT REGULATIONS. THE SYSTEMS SHALL BE THOROUGHLY FLUSHED OF ALL DIRT AND FOREIGN MATTER, THEN FILLED WITH WATER TREATED WITH 50 PPM OF CHLORINE. DURING THE FILLING PROCESS, VALVES AND FAUCETS SHALL BE OPENED SEVERAL TIMES TO ASSURE TREATMENT OF THE ENTIRE SYSTEM. THE TREATED WATER SHALL BE LEFT IN THE SYSTEM FOR 24 HOURS AFTER WHICH TIME THE SYSTEM SHALL BE FLUSHED; IF THE RESIDUAL CHLORINE IS NOT LESS THAN 10 PPM, THE FLUSHING SHALL BE REPEATED. AFTER STERILIZATION, SAMPLES OF WATER IN THE SYSTEM SHALL BE APPROVED BY THE BOARD OF HEALTH.
6. PIPING:
   - A. DOMESTIC COLD AND HOT WATER (ABOVEGROUND).
     - 1) TYPE L HARD DRAWN COPPER TUBING, ASTM B-88.
       - a) WROUGHT COPPER SOLDERED FITTINGS, ASTM B75 ALLOY C12200. ANSI B16.22. MSS SP-104.
       - b) MECHANICAL PRESS COPPER FITTINGS FOR USE IN PLUMBING OR MECHANICAL APPLICATIONS. ASME B16.22, ASME B16.51, or ASME B16.18. MECHANICAL PRESS COPPER FITTINGS SHALL CONFORM TO IAPMO PS-117 OR ASME B16.51.
     - 2) VALVES
       - a) GATE VALVE: JOMAR T/S-301 OR EQUAL. NSF 61-8, ANSI B16.20.1, ANSI B16.18
       - b) GLOBE VALVE: CRANE #7 OR EQUAL.
       - c) BALL VALVE: JOMAR T/S-100C OR EQUAL COMPACT LEAD FREE FORGED BRASS BALL VALVE. UL842, CSA 3371-12 & 3371-92, FM, NSF 61, CALIFORNIA CODE AB1953-NSF61 ANNEX G APPROVED.
       - d) BALL VALVE: JOMAR T-100NE OR EQUAL. UL842, FM, CSA, NSF 61-8, MSS SP-110
   - B) LEAD CONTENT OF WATER SUPPLY PIPE AND FITTINGS:
     - a) PIPE AND PIPE FITTINGS, INCLUDING VALVES AND FAUCETS, UTILIZED IN THE WATER SUPPLY SYSTEM SHALL NOT HAVE MORE THAN 8% LEAD CONTENT.
     - b) PIPE, PIPE FITTINGS, JOINTES, VALVES, FAUCETS, AND FIXTURE FITINGS UTILIZED TO SUPPLY WATER FOR DRINKING OR COOKING PURPOSES SHALL COMPLY WITH NSF 372 AND SHALL HAVE A WEIGHTED AVERAGE LEAD CONTENT OF 0.25% OR LESS.
   - C. STORM SEWER, SANITARY SEWER AND VENTS. (UNDERGROUND, INTERIOR TO THE BUILDING).
     - 1) ABS SCHEDULE 40 CELLULAR CORE (FOAM CORE) PIPE AND DWV FITTING SYSTEM: PIPE AND FITTINGS SHALL BE MANUFACTURED FROM ABS COMPOUND WITH A CELL CLASS OF 42222 FOR PIPE AND 32222 FOR FITTINGS AS PER ASTM D 3965 AND CONFORM WITH NATIONAL SANITATION FOUNDATION (NSF) STANDARD 14. PIPE SHALL BE IRON PIPE SIZE (IPS) CONFORMING TO ASTM F 628 FITTINGS SHALL CONFORM TO ASTM D 2661. SOLVENT CEMENTS SHALL CONFORM TO ASTM D 2235.
     - 2) PVC SCHEDULE 40 CELLULAR CORE (FOAM CORE) PIPE AND DWV FITTING SYSTEM: PIPE AND FITTINGS SHALL BE MANUFACTURED FROM PVC COMPOUND WITH A CELL CLASS OF 11432 PER ASTM D 4396 FOR PIPE AND 12454 PER ASTM D 1784 FOR FITTINGS AND CONFORM WITH NATIONAL SANITATION FOUNDATION (NSF) STANDARD 14. PIPE SHALL BE IRON PIPE SIZE (IPS) CONFORMING TO ASTM F 891. INJECTION MOLDED FITTINGS SHALL CONFORM TO ASTM D 2665. FABRICATED FITTINGS SHALL CONFORM TO ASTM F 1866. SOLVENT CEMENTS SHALL CONFORM TO ASTM D 2564.
     - 3) PVC SCHEDULE 40 SOLID WALL PIPE AND DWV FITTING SYSTEM: PIPE AND FITTINGS SHALL BE MANUFACTURED FROM PVC COMPOUND WITH A CELL CLASS OF 12454 PER ASTM D 1784 AND CONFORM WITH NATIONAL SANITATION FOUNDATION (NSF) STANDARD 14. PIPE SHALL BE IRON PIPE SIZE (IPS) CONFORMING TO ASTM D 1785 AND ASTM D 2665. INJECTION MOLDED FITTINGS SHALL CONFORM TO ASTM D 2665. FABRICATED FITTINGS SHALL CONFORM TO ASTM F 1866. SOLVENT CEMENTS SHALL CONFORM TO ASTM D 2564.
     - 4) HUBLESS CAST IRON SOIL PIPE AND FITTINGS: HUBLESS CAST IRON PIPE AND FITTINGS SHALL BE MANUFACTURED FROM GRAY CAST IRON AND SHALL CONFORM TO ASTM A 888 AND CISPI STANDARD 301. HUBLESS COUPLINGS SHALL CONFORM TO CISPI STANDARD 310 AND BE CERTIFIED BY NSF® INTERNATIONAL.
     - 5) HUB AND SPIGOT CAST IRON SOIL PIPE AND FITTINGS: HUB AND SPIGOT CAST IRON PIPE AND FITTINGS SHALL BE MANUFACTURED FROM GRAY CAST IRON AND SHALL CONFORM TO ASTM A 74.
   - D. STORM SEWER, SANITARY SEWER, AND VENTS. (ABOVE GROUND, INTERIOR TO THE BUILDING).
     - 1) ABS SCHEDULE 40 CELLULAR CORE (FOAM CORE) PIPE AND DWV FITTING SYSTEM: PIPE AND FITTINGS SHALL BE MANUFACTURED FROM ABS COMPOUND WITH A CELL CLASS OF 42222 FOR PIPE AND 32222 FOR FITTINGS AS PER ASTM D 3965 AND CONFORM WITH NATIONAL SANITATION FOUNDATION (NSF) STANDARD 14. PIPE SHALL BE IRON PIPE SIZE (IPS) CONFORMING TO ASTM F 628 FITTINGS SHALL CONFORM TO ASTM D 2661. SOLVENT CEMENTS SHALL CONFORM TO ASTM D 2235.
     - 2) PVC SCHEDULE 40 CELLULAR CORE (FOAM CORE) PIPE AND DWV FITTING SYSTEM: PIPE AND FITTINGS SHALL BE MANUFACTURED FROM PVC COMPOUND WITH A CELL CLASS OF 11432 PER ASTM D 4396 FOR PIPE AND 12454 PER ASTM D 1784 FOR FITTINGS AND CONFORM WITH NATIONAL SANITATION FOUNDATION (NSF) STANDARD 14. PIPE SHALL BE IRON PIPE SIZE (IPS) CONFORMING TO ASTM F 891. INJECTION MOLDED FITTINGS SHALL CONFORM TO ASTM D 2665. FABRICATED FITTINGS SHALL CONFORM TO ASTM F 1866. SOLVENT CEMENTS SHALL CONFORM TO ASTM D 2564.
     - 3) PVC SCHEDULE 40 SOLID WALL PIPE AND DWV FITTING SYSTEM: PIPE AND FITTINGS SHALL BE MANUFACTURED FROM PVC COMPOUND WITH A CELL CLASS OF 12454 PER ASTM D 1784 AND CONFORM WITH NATIONAL SANITATION FOUNDATION (NSF) STANDARD 14. PIPE SHALL BE IRON PIPE SIZE (IPS) CONFORMING TO ASTM D 1785 AND ASTM D 2665. INJECTION MOLDED FITTINGS SHALL CONFORM TO ASTM D 2665. FABRICATED FITTINGS SHALL CONFORM TO ASTM F 1866. SOLVENT CEMENTS SHALL CONFORM TO ASTM D 2564. (WHERE APPROVED BY LOCAL JURISDICTIONS. NOT FOR USE IN A RETURN AIR PLENUM.)
     - 4) HUBLESS CAST IRON SOIL PIPE AND FITTINGS: HUBLESS CAST IRON PIPE AND FITTINGS SHALL BE MANUFACTURED FROM GRAY CAST IRON AND SHALL CONFORM TO ASTM A 888 AND CISPI STANDARD 301. HUBLESS COUPLINGS SHALL CONFORM TO CISPI STANDARD 310 AND BE CERTIFIED BY NSF® INTERNATIONAL.
     - 5) HUB AND SPIGOT CAST IRON SOIL PIPE AND FITTINGS: HUB AND SPIGOT CAST IRON PIPE AND FITTINGS SHALL BE MANUFACTURED FROM GRAY CAST IRON AND SHALL CONFORM TO ASTM A 74.
   - E. STORM SEWER, SANITARY SEWER, AND VENTS. (UNDERGROUND, EXTERIOR TO THE BUILDING).
     - 1) ABS SCHEDULE 40 CELLULAR CORE (FOAM CORE) PIPE AND DWV FITTING SYSTEM: PIPE AND FITTINGS SHALL BE MANUFACTURED FROM ABS COMPOUND WITH A CELL CLASS OF 42222 FOR PIPE AND 32222 FOR FITTINGS AS PER ASTM D 3965 AND CONFORM WITH NATIONAL SANITATION FOUNDATION (NSF) STANDARD 14. PIPE SHALL BE IRON PIPE SIZE (IPS) CONFORMING TO ASTM F 2680 FITTINGS SHALL CONFORM TO ASTM D 2680. SOLVENT CEMENTS SHALL CONFORM TO ASTM D 2235.
     - 2) PVC SCHEDULE 40 CELLULAR CORE (FOAM CORE) PIPE AND DWV FITTING SYSTEM: PIPE AND FITTINGS SHALL BE MANUFACTURED FROM PVC COMPOUND WITH A CELL CLASS OF 11432 PER ASTM D 4396 FOR PIPE AND 12454 PER ASTM D 1784 FOR FITTINGS AND CONFORM WITH NATIONAL SANITATION FOUNDATION (NSF) STANDARD 14. PIPE SHALL BE IRON PIPE SIZE (IPS) CONFORMING TO ASTM F 891. INJECTION MOLDED FITTINGS SHALL CONFORM TO ASTM F 794. FABRICATED FITTINGS SHALL CONFORM TO ASTM F 1866. SOLVENT CEMENTS SHALL CONFORM TO ASTM D 2564.
     - 3) PVC SCHEDULE 40 SOLID WALL PIPE AND DWV FITTING SYSTEM: PIPE AND FITTINGS SHALL BE MANUFACTURED FROM PVC COMPOUND WITH A CELL CLASS OF 12454 PER ASTM D 1784 AND CONFORM WITH NATIONAL SANITATION FOUNDATION (NSF) STANDARD 14. PIPE SHALL BE IRON PIPE SIZE (IPS) CONFORMING TO ASTM F 794. FITTINGS SHALL CONFORM TO ASTM F 794. SOLVENT CEMENTS SHALL CONFORM TO ASTM D 2564.
     - 4) HUBLESS CAST IRON SOIL PIPE AND FITTINGS: HUBLESS CAST IRON PIPE AND FITTINGS SHALL BE MANUFACTURED FROM GRAY CAST IRON AND SHALL CONFORM TO ASTM A 888 AND CISPI STANDARD 301. HUBLESS COUPLINGS SHALL CONFORM TO CISPI STANDARD 310 AND BE CERTIFIED BY NSF® INTERNATIONAL.
     - 5) HUB AND SPIGOT CAST IRON SOIL PIPE AND FITTINGS: HUB AND SPIGOT CAST IRON PIPE AND FITTINGS SHALL BE MANUFACTURED FROM GRAY CAST IRON AND SHALL CONFORM TO ASTM A 74.
     - 6) COPPER DWV: DRAINAGE TUBE SHALL CONFORM TO ASTM B306, WROUGHT COPPER FITTINGS, ANSI B-16.29.
     - 7) GALVANIZED STEEL PIPE, WITH MALLEABLE IRON, THREADED FITTINGS, DRAINAGE PATTERN FOR SEWERS SHALL CONFORM TO ASTM A 53.

MECHANICAL SPECIFICATIONS (CONTINUED)

   - F. CONDENSATE DRAINS & INDIRECT WASTE (ABOVEGROUND).
     - 1) DWV, WROUGHT COPPER, ANSI B-16.29.
     - 2) POLYVINYLCHLORIDE (PVC) DWV PIPE, SCHEDULE 40, SOLVENT JOINT.
   - G. NATURAL GAS.
     - 1) BLACK STEEL PIPE, SCHEDULE 40, ASTM A53.
       - a) PIPE 2" AND SMALLER; 150 LB. MALLEABLE IRON, THREADED FITTINGS.
       - b) PIPE 2" AND SMALLER; VIEGA MEGAPRESS FOR WATER AND GAS. CSA LC4, TSSA/ASME B31 FOR USE WITH ASTM A53 SCHEDULE 40 BLACK IRON PIPE.
       - c) PIPE 2-1/2" AND LARGER, WELDED.
       - d) PLUG VALVE: ROCKWELL NORDSTROM FIGURE NO. 142 OR 143.
       - e) BALL VALVE: JOMAR T-100NE. APPROVALS- UL842, FM, CSA, NSF 61-8, MSS SP-110
     - 2) GAS PIPING PAINTING:
       - a) ALL BLACK STEEL GAS PIPING LOCATED EXTERIOR TO THE BUILDING SHALL BE PRIMED AND PAINTED TO EITHER MATCH ADJACENT EXTERIOR WHERE LOCATED ON OR NEAR EXTERIOR WALL AND PAINTED SAFETY YELLOW WHERE LOCATED ON THE ROOF.
   - H. ALL PIPE HANGERS AND SUPPORTS SHALL BE STANDARD PRODUCTS OF GRINNELL, FEE AND MASON, OR ELCEN. HANGER SPACING SHALL BE IN ACCORDANCE WITH MSS-SP-69.
   - I. SLEEVES
     - 1) PROVIDE, SET, AND PROPERLY LOCATE PIPE SLEEVES AS REQUIRED FOR THIS WORK. ALL SLEEVES SHALL BE OF SUFFICIENT SIZE TO PERMIT PIPE MOVEMENT DUE TO EXPANSION AND CONTRACTION AND TO ACCOMMODATE PIPE INSULATION.
     - 2) INTERIOR PARTITIONS: 16 GAGE GALVANIZED STEEL, PACK BETWEEN PIPE AND SLEEVE WITH FIRE SAFING AND CAULK AT EACH END WITH FIRE RESISTANT SEALANT.
     - 3) ROOF: PROSET OR EQUAL, MANUFACTURED PVC SCHEDULE 40 PIPE SLEEVE WITH WATERPROOF SEAL. COORDINATE WITH ROOFING CONTRACTOR AND FLASH AS REQUIRED TO MAINTAIN ROOF WARRANTY.
     - 4) PLUMBING VENTS: FLASH ROOF VENT INTO ROOFING SYSTEM AS REQUIRED BY THE ROOFING CONTRACTOR TO MAINTAIN EXISTING ROOF WARRANTY. ALL PLUMBING VENT TERMINALS SHALL TERMINATE A MINIMUM OF 12" ABOVE ROOF OR EQUAL TO HEIGHT OF PARAPET, WHICHEVER IS GREATER.
   - J. PROVIDE CHROME PLATED ESCUTCHEONS ON ALL PIPE ENTERING FINISHED AREAS.
7. GAS PIPING LABELING:
   - A. ALL ELEVATED PRESSURE GAS PIPING SHALL BE LABELED EVERY 40 FEET WITH SIGNS INDICATING "ELEVATED PRESSURE".
8. INSULATION:
   - A. ALL INSULATIONS AND ACCESSORIES SHALL HAVE A FIRE HAZARD CLASSIFICATION WITH A FLAME SPREAD RATING OF NOT OVER 25, A FUEL CONTRIBUTION RATING OF NOT OVER 50, AND A SMOKE DEVELOPED RATING OF NOT OVER 50, IN ACCORDANCE WITH NFPA.
   - B. PIPE INSULATION - ABOVE GRADE:
     - 1) THE PIPING INSULATION USED SHALL HAVE A THERMAL CONDUCTIVITY OF 0.27 Btu PER in/hr*sqft*F° OR LESS.
     - 2) FIBERGLASS INSULATION WITH FACTORY APPLIED VAPOR BARRIER, ASJ JACKET, FACTORY APPLIED PRESSURE SEALING LONGITUDE LAP JOINT, NO STAPLES, ZESTON PREMOLDED PVC FITTING COVERS. INSTALLATION SHALL BE IN ACCORDANCE WITH MANUFACTURER'S RECOMMENDATIONS.
     - 3) FLEXIBLE CLOSED CELL ELASTOMERIC THERMAL INSULATION, UNSLIT OR PRESLIT WITH PRESSURE SENSITIVE ADHESIVE SYSTEM FOR CLOSURE AND VAPOR SEALING, EQUAL TO ARMSTRONG AP ARMAFLEX OR ARMAFLEX 2000.
     - 4) FOR NON CIRCULATING SYSTEMS, THE FIRST 8 FEET OF INLET AND OUTLET PIPING BETWEEN THE TANK AND THE HEAT TRAP (INCLUDING THE HEAT TRAP) MUST BE INSULATED.
     - 5) INSULATION SCHEDULE:

a) DOMESTIC COLD WATER	1/2"
b) DOMESTIC HOT WATER	1"
b) ROOF DRAINS	1" INSULATION SHALL BE PROVIDED AT ROOF DRAIN BODY AND A MINIMUM OF 10' OF HORIZONTAL PIPING OR A MINIMUM OF 5' IF COMBINATION OF HORIZONTAL AND VERTICAL STORM PIPING DOWNSTREAM OF ROOF DRAIN BODY.

9. PLUMBING:
   - A. PROVIDE AN APPROVED WATER HAMMER ARRESTOR FOR EACH PLUMBING FIXTURE SUPPLY AS REQUIRED BY FIXTURE MANUFACTURER.
   - B. ALL EXPOSED PIPE SHALL BE CHROME PLATED BRASS PIPE, NO FERROUS PIPE.
   - C. PROVIDE CLEANOUTS AT EACH CHANGE OF DIRECTION AND AT 100 FOOT INTERVALS IN STRAIGHT RUNS.
   - D. PROVIDE ACCESS PANELS FOR ALL CONCEALED VALVES AND TRAPS.
   - E. CLEANOUTS:
     - 1) VINYL TILE FLOOR: JR SMITH #4140, OR EQUAL.
     - 2) QUARRY TILE FLOOR: JR SMITH #4200, OR EQUAL.
     - 3) CARPETED FLOOR: JR SMITH #4020-Y, OR EQUAL.
     - 4) UNFINISHED FLOOR: JR SMITH #4020, OR EQUAL.
     - 5) WALL: JR SMITH #4472, OR EQUAL, 24" ABOVE THE FLOOR.
     - 6) GRADE: JR SMITH #4256, OR EQUAL, WITH HEAVY DUTY CAST IRON BODY AND COVER.
   - F. PROVIDE DIELECTRIC UNIONS WITH APPROPRIATE END CONNECTIONS TO MATCH THE PIPE SYSTEM IN WHICH INSTALLED (SCREWED, SOLDERED, OR FLANGED). PROVIDE DIELECTRIC UNIONS ON ALL PIPING CONNECTIONS TO HOT WATER HEATERS AND EXPANSION TANKS.
   - G. ALL SEWER PIPING LOCATED INSIDE THE BUILDING SHALL BE INSTALLED WITH THE FOLLOWING SLOPES.
     - 1) INSTALL 2-1/2" AND SMALLER PIPE AT 1/4" PER FOOT FALL.
     - 2) INSTALL 3" AND LARGER PIPE AT 1/8" PER FOOT FALL.
   - H. ALL STORM PIPING LOCATED EXTERIOR TO THE BUILDING SHALL BE INSTALLED WITH THE FOLLOWING SLOPES.
     - 1) INSTALL ALL PIPE AT A MINIMUM OF 1% SLOPE.
10. REMODELING WORK:
   - A. DEMOLITION: DISCONNECT, DEMOLISH, AND REMOVE ABANDONED MECHANICAL MATERIALS AND EQUIPMENT INDICATED TO BE REMOVED AND NOT INDICATED TO BE SALVAGED OR REMAIN.
   - B. EQUIPMENT TO BE SALVAGED:
     - 1) DISCONNECT AND REMOVE, EXISTING MECHANICAL EQUIPMENT INDICATED TO BE REMOVED AND SALVAGED. DELIVER EQUIPMENT TO THE LOCATION DESIGNATED BY THE OWNER FOR STORAGE.
     - 2) ALL MATERIALS AND EQUIPMENT DESIGNATED TO BE REUSED OR RELOCATED SHALL BE CAREFULLY REMOVED, AND STORED UNTIL NEEDED FOR REMODELING WORK. ALL ITEMS SHALL BE RESTORED TO "LIKE NEW" CONDITION WITH RUST OR CORROSION REMOVED, SURFACE PAINT TOUCHED UP OR REPAINTED AS REQUIRED TO MATCH NEW CONSTRUCTION, AND THOROUGHLY CLEANED AND INSPECTED. ANY ITEMS WHICH BECOME DAMAGED BEYOND REPAIR AS A RESULT OF CONSTRUCTION OR DEMOLITION ACTIVITY SHALL BE REPLACED WITH NEW MATERIAL EQUIVALENT IN EVERY RESPECT.
   - C. DISPOSAL AND CLEANUP: REMOVE FROM THE SITE AND LEGALLY DISPOSE OF DEMOLISHED MATERIALS AND EQUIPMENT NOT INDICATED TO BE SALVAGED.
   - D. PROTECT ADJACENT MATERIALS INDICATED TO REMAIN. INSTALL AND MAINTAIN DUST AND NOISE BARRIERS TO KEEP DIRT, DUST, AND NOISE FROM BEING TRANSMITTED TO ADJACENT AREAS. REMOVE PROTECTION AND BARRIERS AFTER REMODELING OPERATIONS ARE COMPLETE.
   - E. LOCATE, IDENTIFY, AND PROTECT MECHANICAL SERVICES PASSING THROUGH REMODELING AREA AND SERVING OTHER AREAS OUTSIDE THE REMODELING LIMITS. MAINTAIN SERVICES TO AREAS OUTSIDE REMODELING LIMITS. WHERE MECHANICAL SERVICES ARE LOCATED IN A WALL, ETC. TO BE DEMOLISHED, REROUTE PIPING TO NEW OR EXISTING CONSTRUCTION TO MAINTAIN CONTINUITY OF THE SYSTEM. WHEN SERVICES MUST BE INTERRUPTED, INSTALL TEMPORARY SERVICES FOR AFFECTED AREAS.
   - F. REMOVE ALL PIPING TO BE DEMOLISHED BACK TO PIPE MAIN OR EDGE OF PROJECT AREA, AND CAP PIPE.
   - G. PIPING AND DUCTS EMBEDDED IN FLOORS, WALLS, AND CEILINGS MAY REMAIN IF SUCH MATERIALS DO NOT INTERFERE WITH NEW INSTALLATIONS. PIPING AND DUCTS TO REMAIN SHALL BE APPROVED BY THE ARCHITECT. REMOVE MATERIALS ABOVE ACCESSIBLE CEILINGS. DRAIN AND CAP PIPING AND DUCTS ALLOWED TO REMAIN ABOVE CEILING OR BELOW FLOOR, CONCEALED FROM VIEW, EXCEPT AS OTHERWISE NOTED. PATCH FLOOR TO MATCH EXISTING.
   - H. PIPE AND DUCT SHALL BE CONCEALED WITH NEW OR EXISTING CONSTRUCTION WHENEVER POSSIBLE, UNLESS INDICATED OTHERWISE.

PLUMBING FIXTURE BRANCH PIPING SCHEDULE

FIXTURE	WASTE	VENT	CW	HW
WATER CLOSET (FLUSH VALVE)	4"	2"	1"	- -
URINAL	2"	1-1/2"	3/4"	- -
LAVATORY	1-1/4"	1-1/4"	1/2"	1/2"
FLOOR DRAIN	2"	2"	- -	- -
WALL/ROOF HYDRANT	- -	- -	3/4"	- -
ELECTRIC WATER COOLER	1-1/4"	1-1/4"	1/2"	- -

NOTE: INDIVIDUAL VENTS FOR FIXTURES ON PLANS AND RISER DIAGRAMS HAVE BEEN INCREASED WHERE HORIZONTAL VENT LENGTH IS IN EXCESS OF THE MAXIMUM DISTANCE INDICATED BY THE CODE.

PLUMBING FIXTURE SCHEDULE:

RD	ROOF DRAIN: ZURN, #Z-163, COMBINATION MAIN ROOF AND OVERFLOW DRAIN, CAST IRON BODY, FLASHING CLAMP, GRAVEL STOP, UNDERDECK CLAMP, SUMP RECEIVER, AND POLYETHYLENE DOME.
DS	DOWN SPOUT NOZZLE: ZURN ZANB199 DOWNSPOUT NOZZLE, ALL NICKEL BRONZE BODY, AND DECORATIVE FACE OF WALL FLANGE AND OUTLET NOZZLE.
HWC	WATER CLOSET (HANDICAPPED): AMERICAN STANDARD, #3043.001 "MADERA ADA", VITREOUS CHINA, FLOOR MOUNTED, FLOOR OUTLET, 17-1/2" HIGH ELONGATED BOWL, SIPHON-JET ACTION, #6047.121.002 FLUSH VALVE, 1.6 GAL/FLUSH, CENTOCO #STSCC-001 OPEN FRONT ELONGATED SEAT WITH CHECK HINGE. HANDLE ON WIDE SIDE OF FIXTURE.
WC	WATER CLOSET: AMERICAN STANDARD, #2234.001 "MADERA", VITREOUS CHINA, FLOOR MOUNTED, FLOOR OUTLET, ELONGATED BOWL, SIPHON-JET ACTION, #6047.161.002 FLUSH VALVE, 1.6 GAL/FLUSH, CENTOCO #STSCC-001 OPEN FRONT ELONGATED SEAT WITH CHECK HINGE.
L1	HANDICAP LAVATORY, UNDERMOUNT: ELKAY, #ELUH1811 "ASANA", STAINLESS STEEL 17-1/2"x 11-3/8" OVAL BASIN, AMERICAN STANDARD #7385 FAUCET WITH SINGLE METAL LEVER HANDLE, OFFSET GRID DRAIN WITH 1-1/4" TAILPIECE, CHROME PLATED P-TRAP (MOUNTED PARALLEL WITH WALL), CHROME PLATED ANGLE STOPS AND RISERS, INSULATE EXPOSED DRAIN, WATER SUPPLIES, AND VALVES WITH PROWRAP SEAMLESS MOLDED CLOSED CELL VINYL INSULATION.
U1	URINAL, WALL HUNG: AMERICAN STANDARD, #6561.017 "TRIMBROOK", VITREOUS CHINA, 0.5 GPM WASH OUT ACTION, WALL HUNG URINAL WITH 3/4" TOP SPUD, #6045.101.002 FLUSH VALVE, FLOOR MOUNTED FIXTURE SUPPORT. SET RIM HEIGHT PER ARCHITECTURAL DRAWINGS.
FD	FLOOR DRAIN: JR SMITH, #2005-A, CAST IRON FLOOR DRAIN WITH ADJUSTABLE TOP AND 6" NIKALOY STRAINER. PROVIDE WITH #2692 QUAD CLOSE TRAP SEAL DEVICE.
MV	MIXING VALVE: WATTS, #LFUSG-B, THERMOSTATIC CONTROLLED MIXING VALVE, LEAD FREE BRONZE BODY, LOCKED TEMPERATURE ADJUSTMENT CAP (VANDAL RESISTANT), COPPER ENCAPSULATED THERMOSTAT ASSEMBLY WITH BRASS SHUTTLE, STAINLESSSTEEL SPRINGS, INTEGRAL CHECK VALVES ON HOT AND COLD INLETS. (SET TO 110°F). ASSE 1070 LISTED.
EWC	ELECTRIC WATER COOLER: ELKAY, #LZS8WS, ADA COMPLIANT EZH2O BOTTLE FILLING STATION WITH SINGLE FILTERED LZ COOLER, 8.0 GPH, 50 DEGREES F WATER WITH 90 DEGREES F AIR TEMPERATURE, 115 VOLT, COLOR TO BE SELECTED BY ARCHITECT AFTER AWARD OF CONTRACT, FRONT AND SIDE PUSH BARS, CHROME PLATED CAST BRASS P-TRAP WITH CLEANOUT, CHROME PLATED LOOSE KEY ANGLE STOP, FLOOR MOUNTED CARRIER AND CANE APRON.
FPRH	FREEZEPROOF ROOF HYDRANT: JR SMITH #5906, 3/4" SIZE, NICKEL-BRONZE FACE, KEY OPERATED, INTEGRAL VACUUM BREAKER.
FPWH	FREEZEPROOF WALL HYDRANT: JR SMITH #5609, 3/4" SIZE, NICKEL-BRONZE FACE, KEY OPERATED, INTEGRAL VACUUM BREAKER.
S1	SINK:ELKAY, #LRAD-2222, 19"x16"x 6-1/2" DEEP BOWL,21-3/8"x 21-3/8" CUT-OUT, ADA COMPLIANT, SINGLE COMPARTMENT, SELF-RIMMING STAINLESS STEEL SINK WITH SATIN FINISH AND SOUND DAMPENING UNDERCOATING, #LK-1000CR FAUCET, SWING SPOUT, 0.5 GPM AERATOR, SINGLE LEVER HANDLE, CHROME PLATED CAST BRASS P-TRAP WITH CLEANOUT, CHROME PLATED ANGLE STOPS AND RISERS.
IWH	INSTANTANEOUS TANKLESS HOT WATER HEATER: STIEBEL ELTRON MINI 3, 120 VOLT, 3.0 KW.
WH	WATER HAMMER ARRESTOR: JR SMITH 'HYDROTROL' #5000 LEAD-FREE WATER HAMMER ARRESTOR, SIZED AS PER MANUFACTURER'S RECOMMENDATIONS.

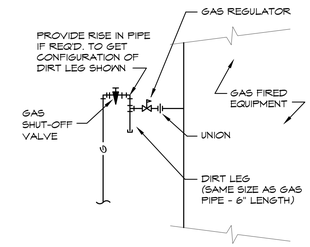

GAS PRESSURE REGULATORS FOR ROOFTOP UNITS (RTU) SHALL BE SENSUS #143-80-2, 2 PSI INLET / 7" WC OUTLET PRESSURE WITH THE ORIFICE & SPRING SIZE AS RECOMMENDED BY THE MANUFACTURER.

GAS CONNECTION DETAIL

SCALE: NONE

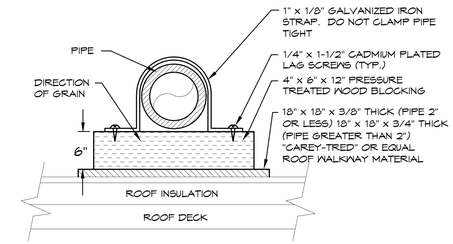

ROOF PIPE SUPPORT DETAIL

SCALE: NONE

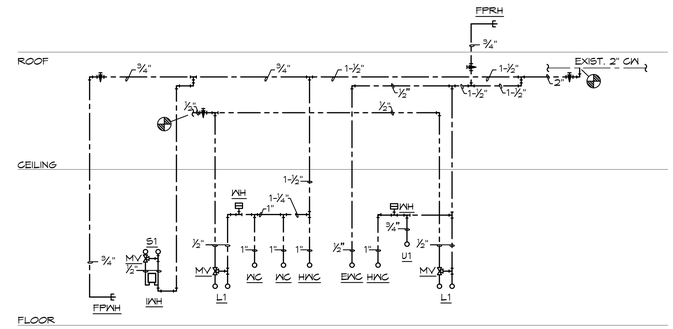

HOT & COLD WATER

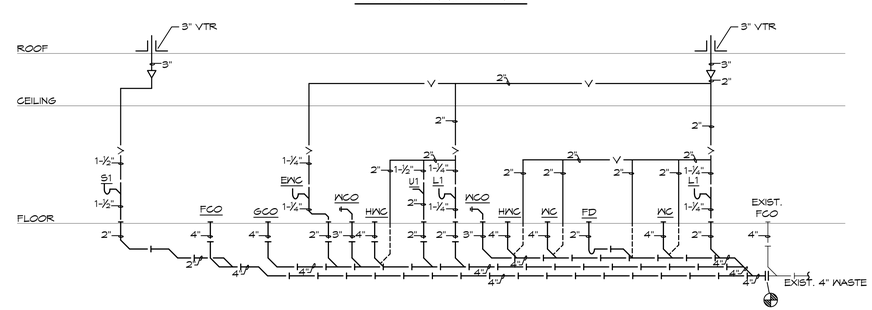

WASTE & VENT

PLUMBING RISER DIAGRAMS

SCALE: NONE

2/4/2020
STEVEN S. POND
NUMBER PE-2004000670
Steven S. Pond

CENTRAL
PLUMBING, HEATING & AIR CONDITIONING, INC.
201 East Walnut
Cleveland, MO 64734
816-942-6355

MISSOURI PE COA #2009003629

BC ENGINEERS INCORPORATED
5720 Reeder Shawnee, Ks. 66203 (913)262-1772

PHASE II ADDITION TO:
THE SUMMIT
3381 NW CHIPMAN ROAD
LEE'S SUMMIT, MO 64081

PROJECT #: 15-678
ISSUE DATE: 2/05/2020
DRAWN BY:
CHECKED BY:
REVISIONS:

SHEET No.
P0.0
PLUMBING SPECIFICATIONS

PLUMBING GENERAL NOTES:

1. INSTALL ALL PIPE, ETC. AS HIGH AS POSSIBLE.
2. COORDINATE ALL WORK WITH OTHER TRADES AND EXISTING CONDITIONS AS REQUIRED TO PROPERLY INSTALL ALL SYSTEMS AS INTENDED, WITHIN THE CONFINES OF THE SPACES AVAILABLE, AND WITHOUT INTERFERENCES.
3. REFER TO ARCHITECTURAL DRAWINGS FOR EXACT LOCATIONS AND MOUNTING HEIGHTS OF FIXTURES.
4. REFER TO ARCHITECTURAL & STRUCTURAL DRAWINGS FOR REQUIREMENTS FOR SUPPORTING PIPING, EQUIPMENT, ETC. FROM THE STRUCTURE. PROVIDE ADDITIONAL STEEL AS REQUIRED TO PROPERLY SUPPORT SYSTEMS FROM THE STRUCTURE.
5. SAWCUT EXISTING FLOOR AS REQUIRED FOR INSTALLATION OF UNDERFLOOR PIPING. PATCH FLOOR TO MATCH EXISTING.
6. NO PIPING SHALL BE ROUTED OVER THE TOP OF ELECTRICAL PANELS.
7. ALL MATERIALS WITHIN PLENUMS SHALL BE NONCOMBUSTIBLE OR SHALL HAVE A FLAME SPREAD INDEX OF NOT MORE THAN 25 AND A SMOKE-DEVELOPED INDEX OF NOT MORE THAN 50 WHEN TESTED IN ACCORDANCE WITH ASTM E 84.
8. CONTRACTOR TO TEST WATER PRESSURE ON SITE AND PROVIDE PRESSURE REDUCING VALVE ON WATER SERVICE IF PRESSURE IS OVER 80 PSI.

PLUMBING SYMBOLS

- SOIL AND WASTE PIPING BELOW FLOOR/GRADE
- SOIL AND WASTE PIPING ABOVE FLOOR/GRADE
- STORM PIPING BELOW FLOOR/GRADE
- STORM PIPING ABOVE FLOOR/GRADE
- STORM OVERFLOW PIPING ABOVE FLOOR/GRADE
- DOMESTIC COLD WATER PIPING
- PIPING TURNING DOWN
- PIPING TURNING UP
- TEE TOP CONNECTION
- UNION
- BACKFLOW PREVENTER
- FD — FLOOR DRAIN
- FCO — FLOOR CLEAN OUT
- WCO — WALL CLEAN OUT
- VALVE
- CONNECT TO EXISTING
- I.E. — INVERT ELEVATION OF PIPE
- (A) — MATCH MARKS ON PLUMBING RISER DIAGRAM
- PRESSURE REGULATOR
- G — GAS PIPING LOCATED ON ROOF

PLUMBING PLAN NOTES:

1. EXTEND AND CONNECT 1-½" GAS PIPING BACK TO EXISTING GAS METER AS REQUIRED, COORDINATE WITH GAS COMPANY FOR ADDITIONAL GAS LOAD OF 800 CFH @ 2PSI, GAS METER IS LOCATED APPROXIMATELY 250' FROM THIS LOCATION.
2. CONNECT GAS PIPING TO EQUIPMENT WITH REGULATOR AS REQUIRED AND AS PER DETAIL.
3. CONNECT 4" WASTE TO EXISTING WASTE STUB AS REQUIRED. VERIFY EXACT LOCATION, DEPTH AND DIRECTION OF FLOW OF EXISTING PIPE PRIOR TO INSTALLATION OF ANY PIPING.
4. CAP BOTH ENDS OF 1-½" CW PIPING AS REQUIRED FOR FUTURE CONNECTION.
5. CONNECT DOWNSPOUT TO STORM OVERFLOW PIPING AT 18" ABOVE GRADE, SEAL PENETRATION WEATHERTIGHT.
6. ROUTE STORM PIPING DOWN TO BELOW GRADE. PROVIDE CLEANOUT AT BASE OF RISER.
7. REPLACE SECTION OF 6" STORM PIPING UNDER ADDITION AS REQUIRED.
8. REMOVE EXISTING DOWNSPOUT AND STORM OVERFLOW PIPING AS SHOWN, CONNECT TO NEW STORM PIPING AS REQUIRED.
9. GAS PIPING LOCATED ON ROOF.
10. CONNECT 2" CW PIPING TO EXISTING 2" CW PIPE AS REQUIRED.
11. ROUTE ¾" CW THRU ROOF TO FREEZE PROOF ROOF HYDRANT AS REQUIRED, SEAL PENETRATION WEATHERTIGHT. CONNECT DRAIN TO FPRH AS REQUIRED BY MANUFACTURER AND ROUTE TO MOP BASIN AND DISCHARGE WITH AIR GAP AS REQUIRED.
12. INSTALL WALL HYDRANT 18" ABOVE GRADE / FINISHED FLOOR.
13. INSTALL INSTANTANEOUS WATER HEATER BELOW SINK AS REQUIRED, CONNECT ½" CW AND ½" HW AND MIXING VALVE AS REQUIRED.
14. LOCATION OF 3" VTR. VERIFY 10' CLEARANCE FROM ALL OUTDOOR AIR INTAKES. SEAL PENETRATION WEATHERTIGHT.
15. EXTEND AND CONNECT ½" HW TO EXISTING HW PIPE AT WATER HEATER AS REQUIRED. VERIFY EXACT LOCATION OF EXISTING HW PIPE PRIOR TO INSTALLATION OF ANY PIPING.

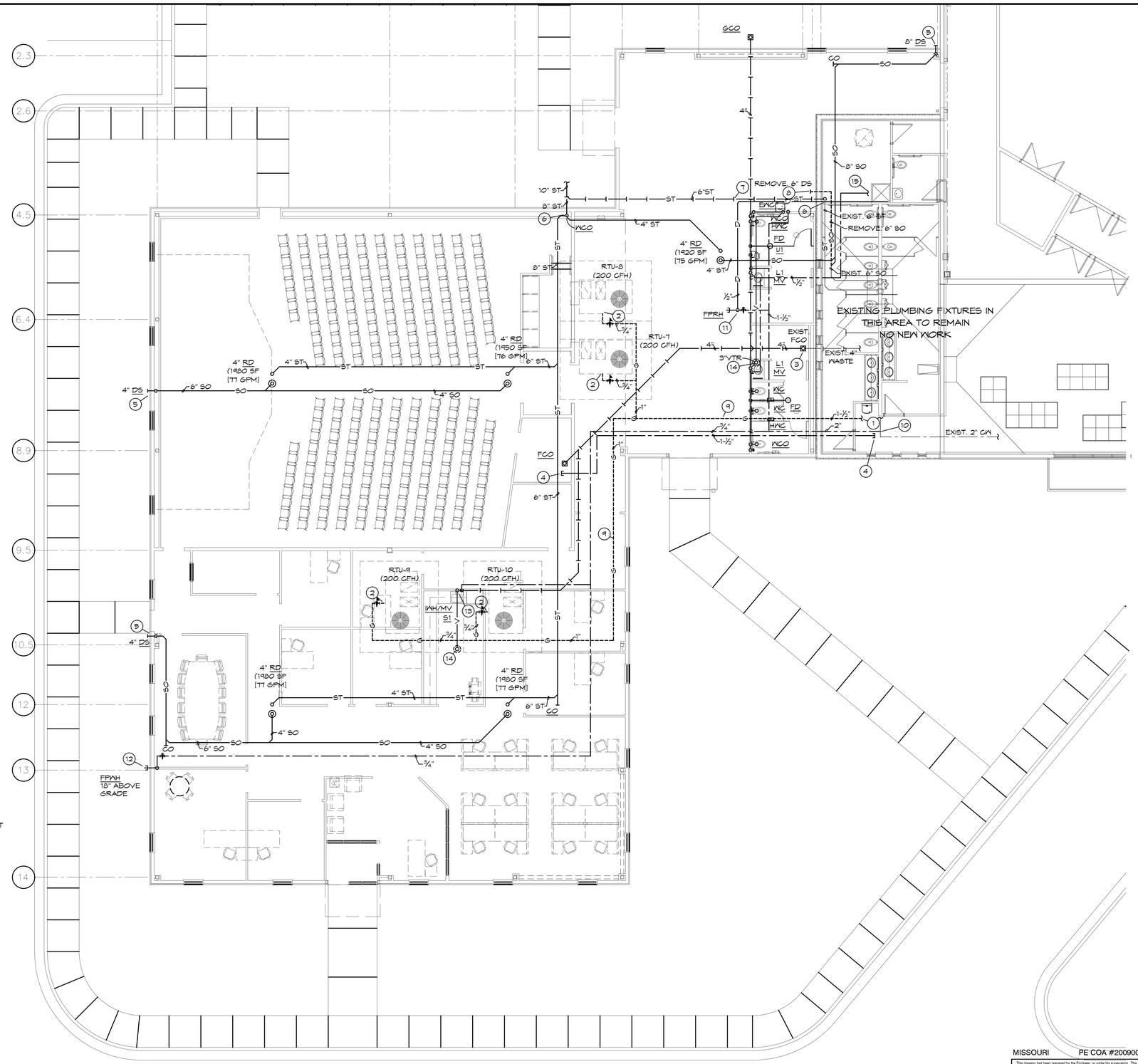

PLUMBING FLOOR PLAN

SCALE: 1/8" = 1'-0"

2/4/2020
STATE OF MISSOURI
STEVEN S. POND
NUMBER PE-2004000070
REGISTERED PROFESSIONAL ENGINEER

PHASE II ADDITION TO:
THE SUMMIT
3381 NW CHIPMAN ROAD
LEE'S SUMMIT, MO 64081

PROJECT #: 15-678
ISSUE DATE: 2/05/2020
DRAWN BY:
CHECKED BY:
REVISIONS:

MISSOURI PE COA #2009003629

CENTRAL
PLUMBING, HEATING & AIR CONDITIONING, INC.
201 East Walnut
Cleveland, MO 64734
816-942-6355

BC ENGINEERS INCORPORATED
5720 Reeder Shawnee, Ks. 66203 (913)262-1772

SHEET No.
P1.1
PLUMBING PLAN

FIXTURE AND DEVICE LEGEND

A	2X4 DIRECT/INDIRECT LED FIXTURE W/2 DRIVERS
B	2X2 DIRECT/INDIRECT LED FIXTURE
BE	SAME AS "B" WITH EMERGENCY BACK-UP
D	2X4 LED ACRYLIC LENS FIXTURE
DE	SAME AS "D" WITH EMERGENCY BACK-UP
F	DIMMABLE LED CYLINDER
G	LED DIMMABLE RECESSED CAN LIGHT
GE	SAME AS "G" W/EMERGENCY BACK-UP
K	6IN LED PENDANT
KE	SAME AS "K" W/EMERGENCY BACK-UP
P	EXTERIOR CANOPY SURFACE MOUNT DOWNLIGHT
T	DECORATIVE WALL MOUNTED UP/DOWN LIGHT
1	
	EXIT SIGN
	EXIT/EMERGENCY LIGHT COMBO
	TWO HEAD EMERGENCY LIGHT
	EMERGENCY EGRESS LIGHT
	SINGLE POLE SWITCH
3	THREE WAY SWITCH
4	FOUR WAY SWITCH
D	DIMMER SWITCH
M	MOTION SWITCH
OVS	OCCUPANCY/VACANCY SWITCH
	DUPLEX RECEPTACLE
	ABOVE COUNTER HEIGHT DUPLEX
D	DEDICATED DUPLEX RECEPTACLE
G	GFI DUPLEX RECEPTACLE
4	FOUR-PLEX RECEPTACLE
G/WP	WEATHER PROOF GFI DUPLEX RECEPTACLE
F V D	FLOOR BOX W/DUPLEX RECEP/TELE/DATA
V	TELE/DATA ROUGH-IN
CR	CARD READER ROUGH-IN

ELECTRICAL INSTALLATION NOTES

1. CONNECT EXIT AND EMERGENCY LIGHTING TO NEAREST UNSWITCHED CIRCUIT.
2. THE MINIMUM CONDUIT SIZE SHALL BE 1/2". THE CONDUIT SHALL BE SIZED FOR 40% FILL OR LESS AS REQUIRED BY PREVAILING ELECTRICAL CODE.
3. ALL ABOVE SLAB CONDUIT SHALL BE EMT.
4. ALL BELOW SLAB CONDUIT SHALL BE PVC.
5. THE MINIMUM CONDUCTOR SIZE SHALL BE #12 COPPER.
6. ALL ABOVE SLAB CONDUCTORS SHALL BE COPPER THHN.
7. ALL BELOW SLAB CONDUCTORS SHALL BE COPPER THWN.
8. PLANS HAVE BEEN DESIGNED IN ACCORDANCE WITH THE 2012 IECC.

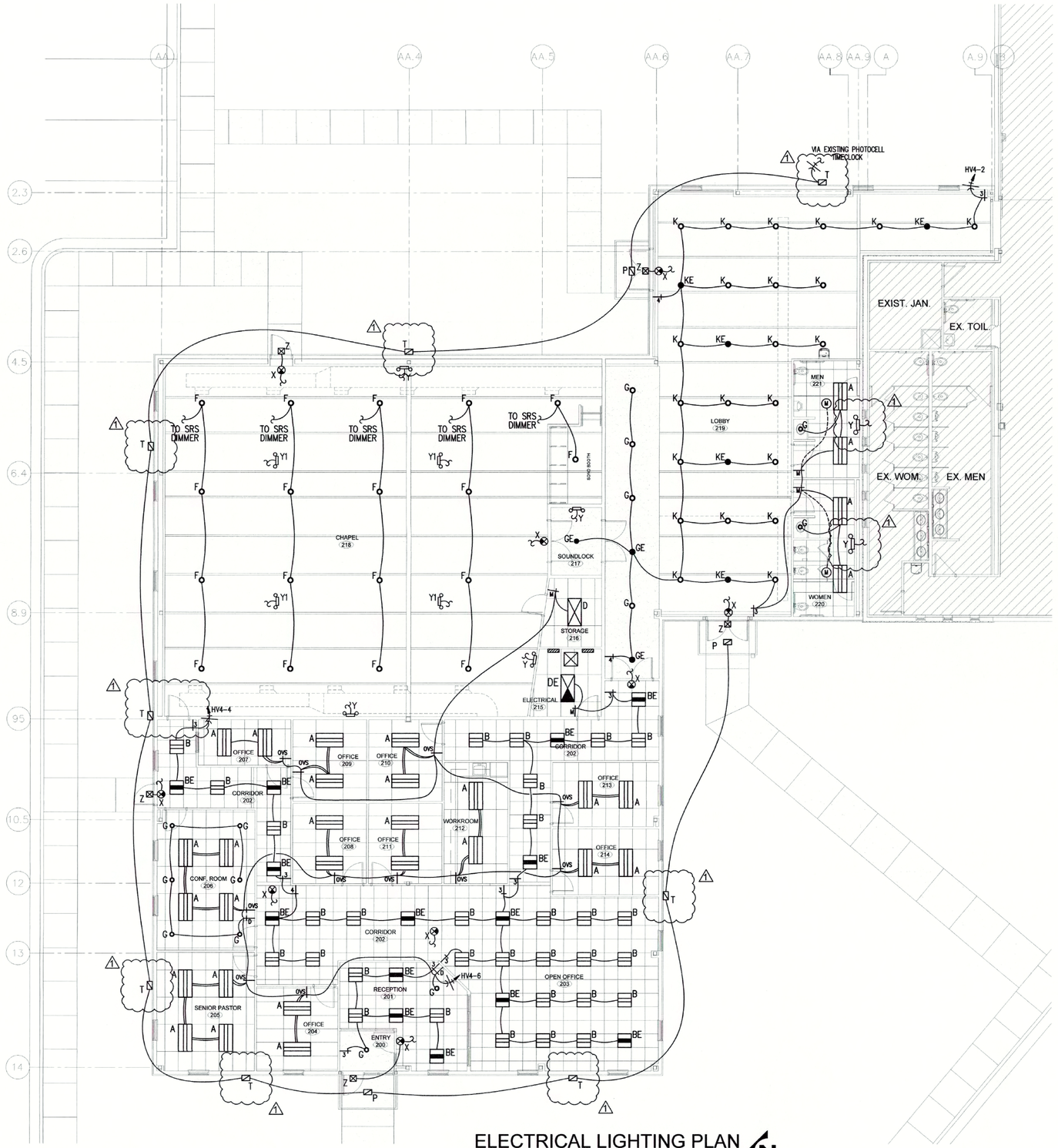

ELECTRICAL LIGHTING PLAN

SCALE: 1/8"=1'-0"

STATE OF MISSOURI
ARTHUR R. FABIAN
NUMBER PE-20399
PROFESSIONAL ENGINEER

ELDECON
ELECTRICAL DESIGN & CONSTRUCTION
6200-I NW Kelly Drive Kansas City, Missouri 64152
Certificate of Authority Number: #2006013730

PHASE II ADDITION TO:
THE SUMMIT
3381 NW CHIPMAN ROAD
LEE'S SUMMIT, MO 64081

PROJECT #:
ISSUE DATE: 02/05/2020
DRAWN BY: JDH
CHECKED BY: LRF

REVISIONS:
1 City Comments 03/09/20

SHEET No.
E1.0
ELECTRICAL LIGHTING PLAN

FIXTURE AND DEVICE LEGEND

A	2X4 DIRECT/INDIRECT LED FIXTURE W/2 DRIVERS
B	2X2 DIRECT/INDIRECT LED FIXTURE
BE	SAME AS "B" WITH EMERGENCY BACK-UP
D	2X4 LED ACRYLIC LENS FIXTURE
DE	SAME AS "D" WITH EMERGENCY BACK-UP
F	DIMMABLE LED CYLINDER
G	LED DIMMABLE RECESSED CAN LIGHT
GE	SAME AS "G" W/EMERGENCY BACK-UP
K	6IN LED PENDANT
KE	SAME AS "K" W/EMERGENCY BACK-UP
P	EXTERIOR CANOPY SURFACE MOUNT DOWNLIGHT
T	DECORATIVE WALL MOUNTED UP/DOWN LIGHT
	EXIT SIGN
	EXIT/EMERGENCY LIGHT COMBO
	TWO HEAD EMERGENCY LIGHT
	EMERGENCY EGRESS LIGHT
	SINGLE POLE SWITCH
3	THREE WAY SWITCH
4	FOUR WAY SWITCH
D	DIMMER SWITCH
M	MOTION SWITCH
OVS	OCCUPANCY/VACANCY SWITCH
	DUPLEX RECEPTACLE
	ABOVE COUNTER HEIGHT DUPLEX
D	DEDICATED DUPLEX RECEPTACLE
G	GFI DUPLEX RECEPTACLE
4	FOUR-PLEX RECEPTACLE
G/WP	WEATHER PROOF GFI DUPLEX RECEPTACLE
F	FLOOR BOX W/DUPLEX RECEP/TELE/DATA
	TELE/DATA ROUGH-IN
CR	CARD READER ROUGH-IN

ELECTRICAL INSTALLATION NOTES

1. CONNECT EXIT AND EMERGENCY LIGHTING TO NEAREST UNSWITCHED CIRCUIT.
2. THE MINIMUM CONDUIT SIZE SHALL BE 1/2". THE CONDUIT SHALL BE SIZED FOR 40% FILL OR LESS AS REQUIRED BY PREVAILING ELECTRICAL CODE.
3. ALL ABOVE SLAB CONDUIT SHALL BE EMT.
4. ALL BELOW SLAB CONDUIT SHALL BE PVC.
5. THE MINIMUM CONDUCTOR SIZE SHALL BE #12 COPPER.
6. ALL ABOVE SLAB CONDUCTORS SHALL BE COPPER THHN.
7. ALL BELOW SLAB CONDUCTORS SHALL BE COPPER THWN.
8. PLANS HAVE BEEN DESIGNED IN ACCORDANCE WITH THE 2012 IECC.

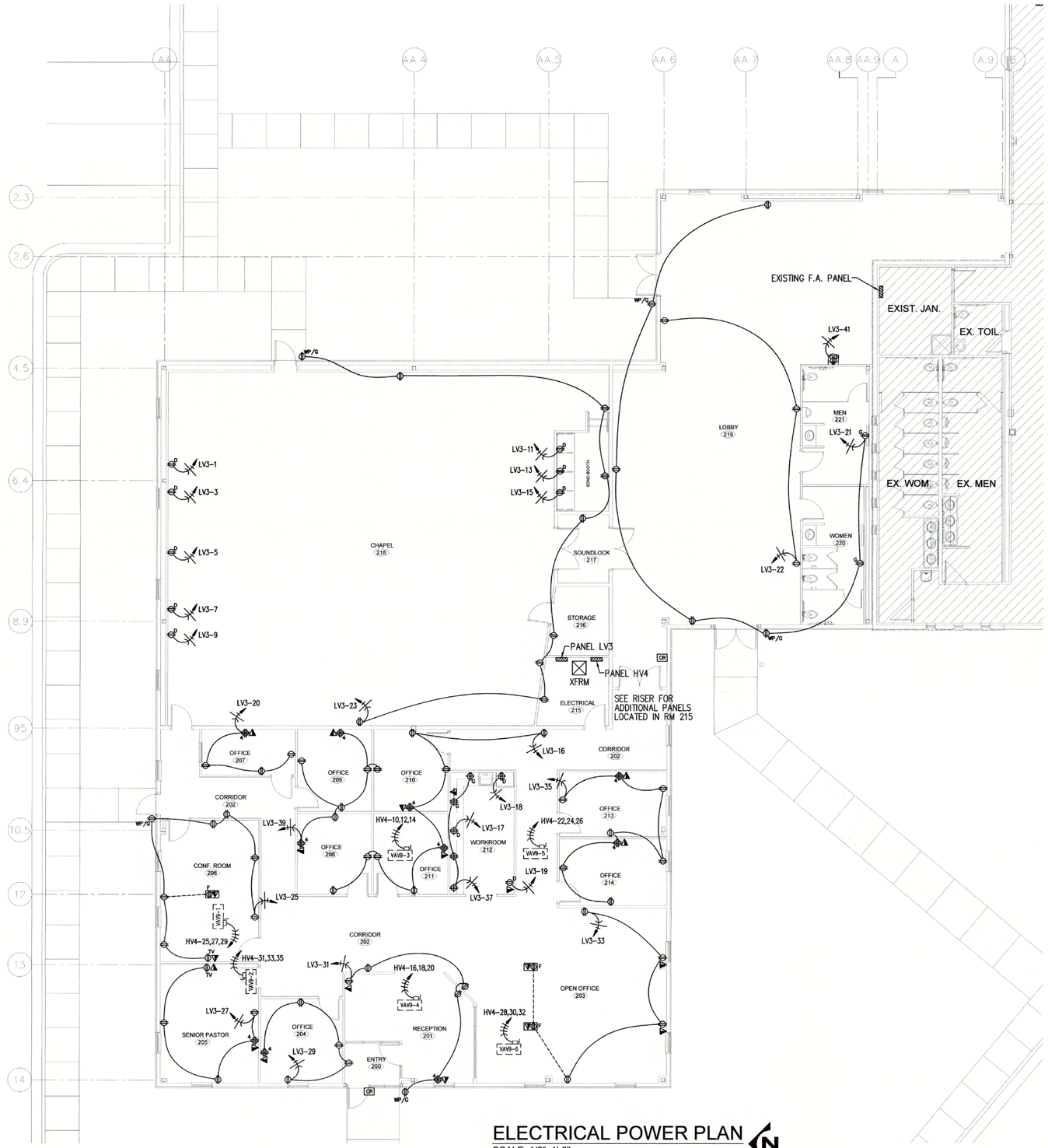

ELECTRICAL POWER PLAN

SCALE: 1/8"=1'-0"

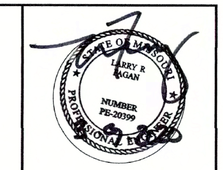

ELDECON
ELECTRICAL DESIGN & CONSTRUCTION
6200-I NW Kelly Drive Kansas City, Missouri 64152
Certificate of Authority Number: #2006013730

PHASE II ADDITION TO:
THE SUMMIT
3381 NW CHIPMAN ROAD
LEE'S SUMMIT, MO 64081

PROJECT #:
ISSUE DATE: 02/05/2020
DRAWN BY: JDH
CHECKED BY: LRF
REVISIONS:

SHEET No.
E2.0
ELECTRICAL POWER PLAN

ELECTRICAL RISER DIAGRAM

SCALE: NTS

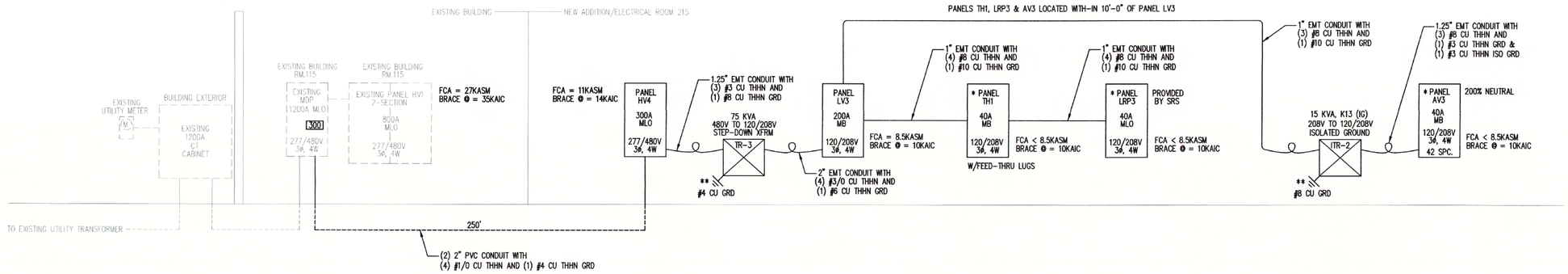

** TRANSFORMER GROUNDING

BOND TO NEAREST EFFECTIVELY GROUNDED STRUCTURAL MEMBER OF THE STRUCTURE. REF. ARTICLE 250.30A (4) WITH COPPER CONDUCTOR SIZED AS SHOWN AT EACH TRANSFORMER.

* PANEL SCHEDULES FOR PANELS TH1, LRP3 AND AV3 PROVIDED BY SRS. SEE AVL-2.1.

PANEL "LV3" SCHEDULE
200A MB, 120/208V, 3ø, 4W PANELBOARD

CKT NO.	DESCRIPTION	VOLT AMP/PHASE A	B	C	BKR	CKT NO.	DESCRIPTION	VOLT AMP/PHASE A	B	C	BKR
1	RECEP (D)	300			20	2	ISOLATION XFRM-AVL	4383			40
3	RECEP (D)		300		20	4			4383		
5	RECEP (D)			300	20	6				4383	
7	RECEP (D)	300			20	8	LIGHTING PANEL AVL	4333			40
9	RECEP (D)		300		20	10			4333		
11	RECEP (D)			300	20	12				4333	
13	RECEP (D)	300			20	14	MP/GFI ROOF	600			20
15	RECEP (D)		300		20	16	RECEPTACLE		1200		20
17	RECEP (D)			300	20	18	FRIDGE			300	20
19	RECEP (D)	300			20	20	RECEPTACLE	600			20
21	RECEPTACLE		1200		20	22	RECEPTACLE		450		20
23	RECEPTACLE			1200	20	24					
25	RECEPTACLE	1200			20	26					
27	RECEPTACLE		900		20	28					
29	RECEPTACLE			900	20	30					
31	RECEPTACLE	1050			20	32					
33	RECEPTACLE		600		20	34					
35	RECEPTACLE			1200	20	36					
37	RECEPTACLE	950			20	38					
39	RECEPTACLE		1200		20	40					
41	RECEPTACLE			600	20	42					
		4,400	4,800	4,800				9,916	10,366	9,016	

PHASE TOTALS 14,316 15,166 13,816
TOTAL KVA 43,298

PANEL "HV4" SCHEDULE
300A MLO, 277/480V, 3ø, 4W PANELBOARD

CKT NO.	DESCRIPTION	VOLT AMP/PHASE A	B	C	BKR	CKT NO.	DESCRIPTION	VOLT AMP/PHASE A	B	C	BKR
1	RTU-7	6000			30	2	LIGHTING	1400			20
3			6000			4	LIGHTING		1500		20
5				6000		6	LIGHTING			1400	20
7	RTU-8	6000			30	8	EM. LIGHTS	600			20
9			6000			10	VAV 9-3		3000		15
11				6000		12				3000	
13	RTU-9	6000			30	14		3000			
15			6000			16	VAV 9-4		2333		15
17				6000		18				2333	
19	RTU-10	6000			30	20		2333			
21			6000			22	VAV 9-5		2333		15
23				6000		24				2333	
25	VAV 9-1	1666			15	26		2333			
27			1666			28	VAV 9-6		2333		15
29				1666		30				2333	
31	VAV 9-2	1666			15	32		2333			
33			1666			34					
35				1666		36					
37	XFRM TR-3 75KVA	13066			100	38					
39			13066			40					
41				13066		42					
		40,398	40,398	40,398				11,999	11,499	11,399	

PHASE TOTALS 52,397 51,897 51,797
TOTAL KVA 156,091

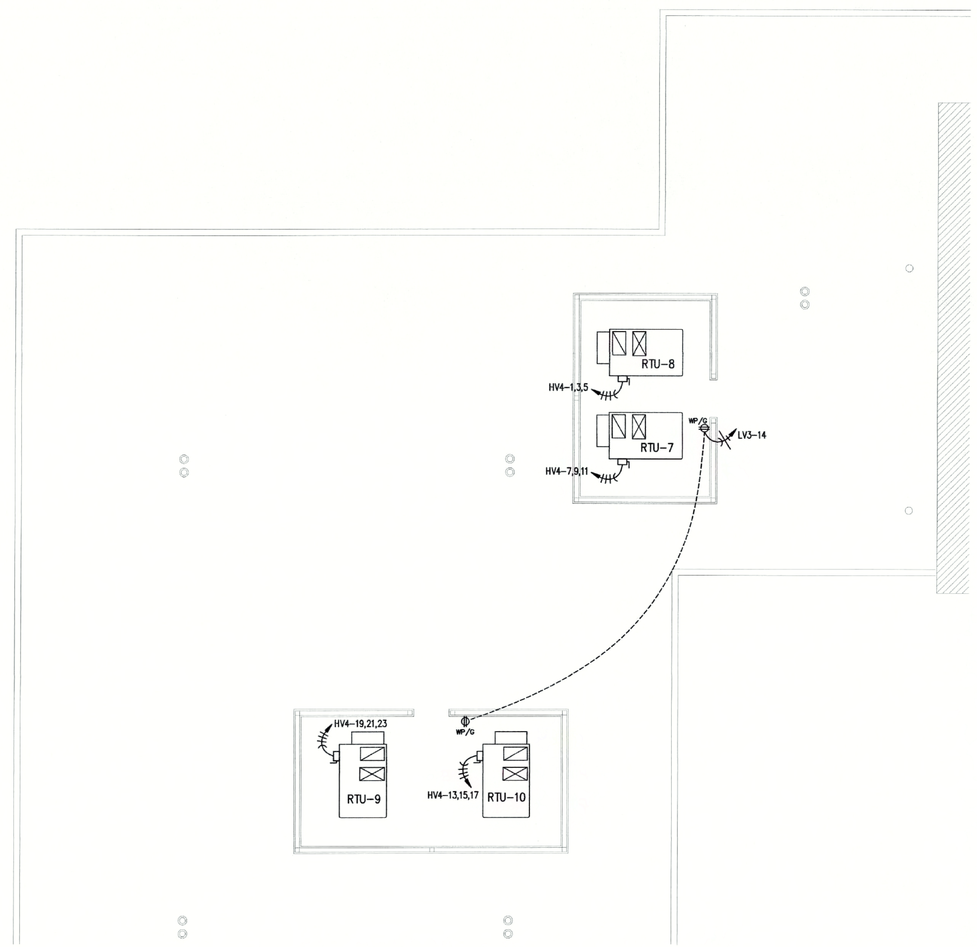

ELECTRICAL PARTIAL ROOF PLAN

SCALE: 1/8"=1'-0"

STATE OF MISSOURI
LARRY R FAGAN
NUMBER PE-20399
PROFESSIONAL ENGINEER

ELDECON INC.
ELECTRICAL DESIGN & CONSTRUCTION
6200-1 NW Kelly Drive Kansas City, Missouri 64152
Certificate of Authority Number: #2006013730

PHASE II ADDITION TO:
THE SUMMIT
3381 NW CHIPMAN ROAD
LEE'S SUMMIT, MO 64081

PROJECT #:
ISSUE DATE: 02/05/2020
DRAWN BY: JDH
CHECKED BY: LRF
REVISIONS:

SHEET No.
E3.0
ELECTRICAL ROOF AND RISER DIAGRAM

DIVISION 16 - ELECTRICAL

SCOPE

All electrical work as shown on the drawings and as necessary to provide a complete electrical system. Include primary service, transformers, distribution center, grounding, power and lighting panels, wiring, outlet boxes, receptacles, lighting fixtures, switches, conduits, and raceways and all accessories.

QUALITY

All work must conform to the National Electric Code, latest edition, and all other applicable codes and regulations.

WARRANTY

All work shall be warranted against defects in material and labor for a period of one (1) year after date of Substantial Completion.

SUBMITTALS

Submit six (6) copies f shop drawings and/or brochures of all electrical equipment and materials to be incorporated into the building to the Architect for approval prior to ordering materials.

COORDINATION

Electrical contractor shall coordinate the electrical hook-up of equipment provided by others. Also, he shall coordinate the location of electrical items with other trades to prevent interference and to permit access to equipment, controls, and access boxes. All work shall be installed to allow easy removal or repair of all building equipment.

OPERATION AND MAINTENANCE MANUALS

Provide three (3) copies of the operation and maintenance manuals to the Architect at least two (2) weeks prior to completion of the work.

RELATED DOCUMENTS

Drawings and general provisions of the Contract, Standard General and Supplementary General Conditions, Division 1 Specification Sections, and other applicable Specifications Sections including Mechanical and Plumbing drawings.

SUBMITTALS

Product Data: Arrange in order of luminaire designation. The submittals shall include data on features, ratings, listings, certifications, accessories, finishes, dimensions, emergency components, photometric data and luminaire efficiency data.

QUALITY ASSURANCE

Lighting fixtures shall be of specification grade and listed or labeled by the Underwriters Laboratories (UL) or an approved Nationally Recognized Testing Laboratory (NRTL).

LED fixtures shall comply with the following:

UL Standard 8750 "Light Emitting Diode Equipment for Use in Lighting Products", IES Standard LM-79 Electrical and Photometric Measurements of Solid-State Lighting Products", IES Standard LM-80 "Measuring Lumen Maintenance of LED light Sources", and IES Standard TM-21 "Projecting Long Term Lumen Maintenance of LED Light Sources".

Cree, Hubbell, Visionaire or equal.

WARRANTY

For non_LED lighting fixtures and components, provide a complete warranty for parts and labor for a minimum of one (1) year from the date of Substantial Completion.

For LED fixtures, lamps, drivers, and components, provide a complete warranty for parts and labor for a minimum of five (5) years from the date of Substantial Completion.

LIGHTING FIXTURES

Recessed lighting fixtures shall be thermally protected.

LED fixtures shall be modular and allow for separate replacement of LED lamps and drivers. User serviceable LED lamps and drivers shall be replaceable from the room side.

Dimmable LED fixtures shall have either a 0-10 volt, 3-wire dimming driver, or a two-step (50-100%) line voltage, two switch controlled dimming driver, as shown on the drawings.

Prescolite, Juno, Atlantic, or equal.

LAMPS

Except where T5 or T5HO lamps are shown in the Fixture Schedule, tubular fluorescent lamps shall be T8, straight tube, rapid-start, multi-phosphor type with a medium bi-pin base, average rated life of 24,000 hours minimum, 3,000 initial lumens, and 2,820 mean lumens. Fluorescent lamps shall have a correlated color temperature of 3500 degrees K (unless noted otherwise in fixture legend) and a CRI of 85 minimum. GE, Ecolux, Osram/Sylvania, Ecologic, Philips Alto or equal.

Compact fluorescent lamps shall be 4-pin, 13 watt minimum with a color tempature of 3500 degrees K (unless noted otherwise in fixture legend), a CRI of 80 minimum, end-of-life protection, and suitable for use with electronic ballasts. Self-ballasted compact fluorescent lamps are not acceptable except for retrofitting existing incandescent fixtures. Osram/Sylvania, GE, Philips or equal.

LED lamps shall have a color temperature of 3500 degrees K (unless noted otherwise in fixture legend), a CRI of 80 minimum, and a lumen maintenance L70 rating of 50,000 hours minimum. Optimal or equal.

Retrofit LED lamps shall comply with NEMA SSL 4 "SSL Retrofit Lamps: Suggested Minimum Performance Requirements".

High Intensity Discharge (H.I.D.) lamps shall confirm to their applicable ANSI codes.

Incandescent lamps shall be rated 120 volts and shall have a life of 2,000 hours minimum. Standard "A" Type lamps shall be inside frosted.

BALLASTS AND DRIVERS

Except where indicated otherwise, fluorescent fixtures with multiple T8 or T5 lamps shall have two ballasts or a two-step (50-100%) dimming ballast to accommodate dual switching. Fluorescent fixtures with multiple compact fluorescent lamps may have one ballast.

Fluorescent ballast shall be of the electronic, programmed rapid-start, series-circuited, and completely solid-state. Ballasts shall be rated for the specific lamps they are supplying, shall have a maximum crest factor of 1.6, a maximum current total harmonic distortion of 20 percent, a minimum starting temperature of 0 degrees F, and a sound rating of "A". Ballasts for T8 and T5 lamps shall be Osram/Sylvania Quicktronic Professional, Advance Optanium, or Universal Accustart only. Ballasts for compact fluorescent lamps shall be the fixture manufacturer's standard electronic type.

Fluorescent dimming ballasts shall be electronic, comply with the other requirements for electronic ballasts, be capable of smoothly and consistently dimming the amps from full output to 10 percent or less output, and maintain a cathode voltage between 3 to 4 volts. Osram/Sylvania Quicktronic, or Advance.

LED drivers shall be electronic-type, labeled as compliant with radio frequency interference (RFI) requirements of FCC Title 47 Part 15, and comply with NEMA SSl 1 "Electronic Drivers for LED Devices, Arrays, or Systems". LED drivers shall have a sound rating of "A", have a minimum efficiency of 85%, and be rated for a THD of less then 20 percent at all input voltages.

Dimmable LED drivers shall be 0-10V type. Dimmable LED drivers shall be capable of dimming without LED strobing or flicker across their full dimming range.

H.I.D. ballasts shall conform to their applicable ANSI codes. H.I.D. ballasts for use indoors in finished areas shall be of the quietest type available or shall be mounted remote from the fixtures.

Ballasts and drivers shall be rated for the ambient temperatures in which they are located. Outdoor fixtures shall be equipped with ballasts or drivers rated for reliable starting to -20 degrees F. Indoor fixtures located in areas with direct sunlight or above normal ambient temperatures shall have ballasts or drivers rated at 65 degrees C minimum.

EMERGENCY LIGHTING

Emergency lighting shall consist of normal lighting fixtures with generator or battery-inverter system backup, emergency lighting fixtures with individual battery backup, or sealed beam emergency lighting units in accordance with the Fixture Schedule.

Battery-backed fluorescent emergency lighting fixtures shall consist of a fluorescent fixture with one or more lamps connected either to a battery pack and charger mounted remote from the fixture, or to an emergency power ballast mounted internal to the fixture. Minimum light output shall be 600 lumens. The battery shall be nickel cadmium and sized for a minimum of 90 minutes of fixture operation. The charger shall be solid-state and provide overload, short circuit, brownout and low battery voltage protection. The fixture shall include a test/monitor module with LED status indicating lights mounted so as to be visible to the public. The fixture shall not contain an audible alarm.

a. Remote mounted battery packs and chargers: Dual-Lite, Exitronix, or equal.
b. Emergency power ballasts: Bodine or equal.

Battery-backed LED emergency lighting fixtures shall consist of a normal LED fixture with some of all of the LED's connected to a battery and charger. The battery shall be nickel cadmium and sized for a minimum of 90 minutes of fixture operation. The charger shall be solid-state and provide overload, short circuit, brownout and low battery voltage protection. The fixture shall include a test/monitor module with LED status indicating lights mounted so as to be visible to the public. Dual-lite or equal.

Sealed beam emergency lighting units shall consist of sealed beam LED lamps connected to an internally mounted battery and charger. The battery shall be nickel cadmium and sized for a minimum of 90 minutes of battery operation. The charger shall be solid-state and provide overload, short circuit, brownout and low battery voltage protection. The unit shall be suitable for wall or ceiling mounting as required. The unit shall include a test/monitor module with LED status indicating lights mounted so as to be visible to the public. Dual-lite or equal.

EXIT SIGNS

Exit signs shall be of the LED type. Dual-lite, Exitronix, or equal.

LED's shall be wired in parallel to prevent multi-lamp failure, and shall be concealed within the sign by a clear panel and red optical diffuser. Power consumption shall not exceed 2 watts per face.

Exit signs shall have polycarbonate housings with universal mounting brackets; with red or green letters and multi-directional knockout arrows.

Exit signs shall be provided with emergency battery packs and battery chargers when required. Batteries shall be maintenance free nickel cadmium, and shall be mounted within the signs.

INSTALLATION

Support recessed troffers independently of the ceiling grid system by using two safety wires minimum on diagonally opposite corners of the fixtures. Support recessed downlights by using safety wires or by rigidly attaching the fixtures to the building structure of ceiling grid system. Removable T-bar clips shall not be used to attach fixtures to the ceiling grid system.

Install fixtures level, with no gaps between adjacent fixtures or between fixtures and surrounding surfaces. Lenses, reflectors, and trims of fixtures shall be properly and uniformly aligned.

Where fixtures are shown with dual switches, control all inner lamps with one switch and all outer lamps with the other switch. Where dimming or occupancy sensor-controlled fixtures are shown, control the fixtures in accordance with the appropriate wiring diagram or manufacturer's instructions.

Connect night light fixtures and emergency lighting fixtures to the hot (unswitched) side of lighting circuits.

Provide an individual feed with ground conductor from a junction box to each lighting fixture.

Drops to recessed fixtures may be flexible metallic conduit, or manufactured wiring systems may be used where accessible. Fixtures shall be provided with sufficient length to permit removal and lowering of the fixtures 12" below the ceiling.

Provide green grounding conductors back to the panel ground for lighting circuits. Raceways shall not be used as grounding conductors.

Fixtures shall have their exterior labels removed and shall be thoroughly cleaned.

Locate emergency lighting remote battery packs and remote test/monitor modules identically so their status indicating lights are visible to the public and they form a straight line when viewed from the end of the corridor or room. Where a suspended ceiling exists, center the status indicating lights in adjacent

ceiling tiles.

Mount sealed beam emergency lighting units where shown and aim their lamps to light the egress path as uniformly as possible.

FIELD QUALITY CONTROL

A visual inspection shall be performed to verify cleanliness and alignment of the fixtures. Misalignment and light leaks shall be corrected, and rattles due to ventilation system vibration shall be eliminated.

Perform an operational test to verify that all fixtures illuminate properly, dimming systems dim properly (i.e. no flicker), and lighting zones are switched according to the drawings.

TRAINING

Provide a qualified service technician to provide training. Train Owner's maintenance personnel on equipment operation, start-up and shutdown, trouble-shooting, servicing, and preventative maintenance procedures. Review the data contained in the Operating and Maintenance Manuals with Owner's personnel. Training shall occur separate from startup activities.

HVAC HOOK-UP

As shown on drawings.

To be provided and installed by heating and ventilation contractor and wired by electrical contractor.

CONDUIT

Rigid, galvanized - in concrete.
Electrical Metallic Tubing (EMT) - in other locations.
Flexible Conduit - Flexible, plastic jacketed.
Couplings - Set screw.
Rigid P.V.C. - Schedule 40, underground locations.

Make connections to motors and equipment with PVC jacketed flexible conduit. Minimum size 1/2 inch for motor connections. Use 3/8 inch flexible conduit for fixture and control wiring only.

BUILDING WIRE

Interior: THWN and THHN, copper or aluminum, 600 volt insulation.
Exterior: THWN, copper or aluminum.

Conductors size #10 AWG and smaller may be stranded or solid. Conductors #8 AWG and larger shall be stranded.

MC CABLE

MC cable shall consist of interlock armored cable made of three or four type THHN solid (#8 AWG and larger may be stranded) copper conductors insulated with heat and moisture resistant polyvinyl chloride (PVC) with nylon or equivalent UL listed jacket, per UL standard 83. The three conductors shall be twisted together with the copper grounding conductor, suitable fillers and wrapped in binder tape. The assembly shall be armored with spirally wrapped interlocked armor or aluminum or galvanized steel.

Cables shall be tested in accordance with UL standard 1569 for type MC cable and rated at 600 volts, 90 degree C for dry locations and 75 degree C for wet locations.

BOXES

Sheet metal boxes, NEMA OS1, galvanized steel.

WIRING DEVICES

Wall Switches - Hubbell #1221, NEMA, WD-1, specification grade, AC only, 120/277, general use snap switch, 20 amp or equivalent.

Receptacles - Duplex, Hubbell #5361; GFCI, Hubbell #GF5362 or equivalent.

Cover Plates - As designated by architect or customer.

MOTOR DISCONNECTS

Siemens VB11, single phase (2 pole), three phase (3 pole) general duty or heavy duty, fusible, 250 or 600 volt as required, NEMA 1 for indoor and NEMA 3R for outdoor or wet locations.

CONDUIT SUPPORTS

Galvanized conduit strap anchors.

SWITCHBOARDS

Switchboards to meet all UL and NEMA Standards and NEMA Class construction. Switchboards used as service entrance shall carry UL label identifying it as suitable for use as service entrance equipment.

SIEMENS - DISTRIBUTION SWITCHBOARDS

NEMA Class 1, front accessible, rear aligned with group mounted devices, fully enclosed, indoor, rated 600 volts, single-phase, 3-wire service with neutral.

Main service entrance switch shall be switchboard mounted. Main switch shall be manual operation with electrical trip capability.

PANEL BOARDS

Panel boards shall meet UL Standards 50 and 67 and shall bear UL Labels. They shall also meet NEMA Standards.

Siemens P Series panel boards, 120/208 volt, with bolt on breakers.

Breakers shall be thermal magnetic type, quick-make, quick-break, enclosure compensated, bolt-in-type. Two and three pole breakers shall be single unit common trip. Breakers used for lighting shall be approved for that purpose and marked "SWD".

Cabinet shall be for recessed installation with rust-proof prime paint coating and finish coating of ANSI No. 61 paint. Busbars shall be aluminum or copper. Provide panel schedule inside face of door. Door shall have key lock and be hinged to the box. Terminal lugs shall be UL approved for AL/CU termination.

WORKMANSHIP

Shall be performed in compliance with all applicable safety regulations by experienced electricians in first class condition. All electrical equipment shall be tested and then adjusted for proper operation. Final start up of equipment shall include a complete demonstration of operation for the Owner's personnel.

For exposed runs, attach surface mounted conduit with clamps. Route all conduits parallel or perpendicular to building lines. Splice only in accessible junction outlet boxes.

Color code conductors to designate conductor and phase.

Install all conductors, connections, and splices in accordance with National Electric Code. Provide copper grounding conductors and straps.

Mount switches 48 inch above floor and outlets at 18" above floor.

Install identification tags in all switch and outlet boxes to identify that circuit.

Provide mounting brackets, busbars drilled and tapped, and filler pieces for unused spaces.

Prepare and affix typewritten directory to inside cover of panel board indicating loads controlled by each circuit.

Flush mounted panelboards shall have 2-3/4" spare conduits stubbed out to accessible ceiling space.

Provide and install all disconnects for mechanical equipment that do not have a disconnecting means furnished as an integral part of the equipment. Coordinate with Mechanical Contractor.

Electrical Contractor shall receive, uncrate, mount, connect, and adjust electrical equipment furnished under all Sections of the Specifications. This includes controls, detached, motors, controllers, starters, and electrical elements of temperature control systems.

Electrical Contractor shall set, align, and connect all separate motors, and furnish lubrication, start-up and test.

Electrical Contractor shall provide stencil nameplate for each unit he mounts and shall furnish and install required mountings.

Electrical Contractor shall complete Electrical work shown or noted on Electrical Drawings.

Electrical Contractor shall furnish and install power and control wiring associated with HVAC Temperature Control System.

****** END OF DIVISION 16 - ELECTRICAL ******

STATE OF MISSOURI
LARRY R FAGAN
NUMBER PE-20399
PROFESSIONAL ENGINEER

ELDECON
ELECTRICAL DESIGN & CONSTRUCTION
6200-1 NW Kelly Drive, Kansas City, Missouri 64152
Certificate of Authority Number: #2006013730

PHASE II ADDITION TO:
THE SUMMIT
3381 NW CHIPMAN ROAD
LEE'S SUMMIT, MO 64081

PROJECT #:
ISSUE DATE: 02/05/2020
DRAWN BY: JDH
CHECKED BY: LRF
REVISIONS:

SHEET No.
E4.0
ELECTRICAL SPECIFICATION

AVL Table of Contents

1 Table of Contents

AFF Above Finished Floor
AUD Audio
AV Audio/Video
AVL Audio/Video/Lighting
AVLA Audio/Video/Lighting/Acoustics
AVLI Audio/Video/Lighting Integrator
BOE Bottom of Equipment
CL Center line
CTRL Control
DMR Dimmer
DF Design factor
DIM Dimension
DIMS Dimensions
DOC Document
DWG Drawing
EA Each
EL Elevation
ELEC Electrical
EXIST Existing
EXT Exterior
FC Foot Candle
FIXT Fixture
FLR Floor
FUT Future
GA Gauge
GC General Contractor
GND Ground
HR Hour
HV High Voltage
HVAC Heating, Ventilating, And Air Conditioning
I/O Input/output
IC Intercom
IG Isolated Ground
LTG Lighting
LV Low Voltage
MAX Maximum
MIN Minimum
MTG Mounting
- **C** CLG
- **F** Flush
- **H** Hidden
- **REC** Recessed
- **W** Wall
- **D** Desk/Tabletop
- **FL** Floor
- **P** Pipe
- **S** Surface

NIC Not In Contract
NO Number
NTS Not to Scale
NS No Scale
OC On Center
OFCI Owner Furnished Contractor Installed
OFE Owner Furnished Equipment
OFOI Owner Furnished Owner Installed
PNC Preferred Noise Criterion
PWR Power
RCP Reflected Ceiling Plan
REQD Required
RM Room
SPEC Specified OR Specification
SRS Stark Raving Solutions
STD Standard
TBD To Be Determined
TOE Top of Equipment
TYP Typical
VIF Verify In Field
W/ With
WLL Working Load Limit

3 Standard Abbreviations

General Notes
1. Location of AVL equipment and infrastructure assumed to be +/- 6" unless otherwise marked on drawings. Use of scale or PDF measurements expected unless dimensions are specifically noted.
2. Any changes to the location of Audio / Video / Lighting (AVL) devices shall be coordinated with the owner (Church), AVL designer (SRS), and installer (SRS). Changes approved and made during installation to be documented on the AVL as-built documentation by SRS.
3. The AVL equipment locations shown in drawings will require space to accommodate equipment racks, required electrical devices and conduit, wire trays, AVL equipment, accessories and work space for operators. AVL equipment racks require a minimum of 36" clearance in front of equipment racks for operation. Access must be provided for servicing to the rear of the equipment rack or space for racks to swing open or roll out for servicing.
4. Ceiling mounted equipment to be connected directly to structural beams where possible.
5. All cable jackets will be appropriately rated for the environment and installation methods where cable is installed. See **AVL 6.0** for approved cable types.
6. Drawings show a typical number of operators required for full system operation, but the number of operators may vary up or down depending upon production requirements.
7. Operators may operate some equipment standing or seated, or a combination of standing and seated so work surface heights have been designed with this in mind.

Engineering Approval
1. These AVL drawings include equipment rigging and attachment methods conforming to industry standard recommended design. SRS recommends that final rigging loads, attachment methods, equipment and process must be reviewed by owner provided professional structural engineer, approved and stamped prior to installation. Professional engineer stamp is required to indicate approval.
2. Stark Raving Solutions is not licensed for and does not perform structural or electrical engineering. No analysis has been made by Stark Raving Solutions concerning either area. The seal of a registered professional engineer will appear on these drawings if they have been reviewed and approved by a licensed engineer. Obtaining required approval is the responsibility of the owner.

Future Equipment and Optional Equipment
1. These AVL drawings include design elements for future AVL systems in addition to the installed equipment. This equipment must be accommodated and appropriate infrastructure installed to facilitate easy installation of equipment by the owner after occupancy of the building.
2. All conduit, boxes, support, backing and power shown in these drawings to be installed to facilitate future upgrades and phases as necessary.

4 General Notes

Scope of Work by Contractor for AVL sheets

AVL Design / Build (SRS) shall be responsible for all of DIV 11.61.33 DIV 27.41 except 27.41.3 and other exceptions and responsibilities as noted below, subject to AVL signed contract scope and selected AVL budget in Technology Program Report.
The Electrical Contractor (EC) shall be responsible for all DIV 26 with exceptions and other responsibilities as noted below.
The Owner shall be responsible for all equipment defined as OFE or OFCI and all work and equipment defined as OFOI or Owner.
The General Contractor (GC) shall be responsible for all other divisions, coordinating and assigning subcontractors for other divisions of responsibility, work and equipment.

DEFINITIONS:
Provide: to supply and install.
Furnish: to supply to another contractor for installation.
Install: to set in position, wire, connect, and prepare for use but not supply.
Wire: to provide cabling and terminations.

AVL SHEETS SPECIFICATIONS, EQUIPMENT, AND WORK

DIV 01 – General Requirements
All contractors shall:
1. Standards and codes: All Audio, Video, Lighting (AVL) work shall be installed in accordance with the national electric code (NEC), all other applicable federal, state, and local regulations, and appropriate industry standards.
2. Specifications: Work to meet all requirements referenced in Division 27 specifications and Division 1 general requirements.
3. Acoustic Requirements: Provide all work to meet the acoustic requirements as detailed in the AVL drawings and *Facilities Coordination and Acoustic Requirement Report* (AVL-FCARR) by SRS.
4. AVL Support: Provide work as required by AVL drawing set and details in the architectural drawing set.
5. Coordination: This project requires a high level of coordination and cooperation with the owner, architect, SRS, other trades, vendors, and specialty contractors. Carefully examine all contract documents including, but not limited to, AVL drawings, *AVL-FCARR*, AC Sheets, and AVL shop drawings for all general construction, structural, mechanical, plumbing, electrical, and specialty contractor work. Before rough-in, coordinate the work with all other trades, taking responsibility for the proper fitting of material into the building as planned without interference with other work. Establish and verify locations, heights, connection methods, etc. with SRS for all AVL related items, and make reasonable modifications in the layouts needed to prevent conflicts with other trades to provide access for the proper execution of the work.

DIV 06 – Wood, Plastics and Composites
DIV 06 contractor shall:
1. Provide backing material in walls as listed in device schedule or noted on AVL drawings. Backing to be capable of supporting load listed and extending stud to stud in an area wider and taller than mounting size listed. **(AVL 1.25)**

DIV 07 – Insulation
DIV 07 contactor shall:
1. Provide 6" mineral fiber insulation batts under constructed platform and raised tech booth in each joist space.

DIV 09.80 - Acoustic Treatments
DIV 09.80 contactor shall:
1. Provide all acoustic treatments as detailed in the *AVL-FCARR*, AVL drawings, AC sheets, and architectural drawings. **(AVL 1.1.3)**

DIV 09.53 – Acoustic Ceiling Suspended Assemblies
DIV 09.53 contractor shall:
1. Provide ceiling tiles and ceiling grid changes around AVL equipment, cable access and rigging where suspended ceilings are shown on architectural drawing. Coordinate ceiling installation with AVL integrator. **(AVL 1.23, 1.25, 2.22)**

DIV 11.61.33 – Rigging Systems and Controls
GC shall:
1. Provide additional structure necessary to allow for load requirements established for the AVL equipment at the rigging points as shown in drawing **AVL 1.25** and other AVL drawings and existing equipment. SRS recommends all additional building structure provided and approval of loads must be stamped and approved by licensed professional engineer. (SRS will provide attachment devices and hardware as required for equipment referenced in AVL drawings and equipment list but SRS is not responsible for changes required to structure to support the AVL loads).

EC shall:
1. Provide unistrut and rigging hardware required for house light positions.

SRS shall:
1. Provide light pipes, theatrical lighting rigging, connection devices, unistrut and rigging hardware required for theatrical lighting positions and light bars for attachment / rigging theatrical lighting to the structure in the Chapel and over platform.

DIV 11.61.43 – Theatrical Curtains
1. See **AVL 1.21.5** for curtain responsibilities.

DIV 12.30 – Casework
DIV 12.30 contractor shall:
1. Provide all millwork in the tech booth, counter tops and any millwork shown in the architectural drawings around or covering any AVL equipment.
2. Coordinate cutouts, mounting holes and cable pass-throughs with SRS.

DIV 12.50 – Furniture
Owner shall:
1. Provide all furnishings, chairs, etc. as required for technical areas.
2. Provide storage racks and cabinets as needed for loose AVL equipment.

DIV 13.48 – Sound, Vibration and Seismic Control
DIV 13.48 contractor shall:
1. Ensure all trades work meets the acoustic design requirements for isolation, background noise and vibration control and Preferred Noise Criteria as established. **(AVL 1.1.3, 1.1.4, AVL-FCARR)**

All contractors shall:
1. Secure all equipment against rattles and vibrations.
2. Fix any noise caused by vibration of equipment from sound system operating at full level and frequency response.

DIV 23 – HVAC
DIV 23 Contractor shall:
1. Maintain acoustic isolation between acoustic critical spaces. **(AVL 1.1.3, AVL-FCARR)**
2. Maintain background noise levels below required PNC in acoustic critical spaces. **(AVL 1.1.3, 1.1.4)**
3. Provide cooling to maintain environmental requirements and remove AVL equipment heat loads as detailed in **AVL 1.1.2.**

DIV 26 – Electrical
1. In AVL drawings, HV refers to all line voltages (>90V).
2. See AVL 2.0 for definition and requirements of AV and TH Power and empty conduits.

EC Shall:
1. Provide all empty conduit, gang boxes, pull boxes listed in the electrical and conduit schedules of the AVL sheets, junction boxes, pull boxes as required and back boxes as listed in the AVL drawings electrical schedules and designated as supplied by "EC" and installed by "EC". **(AVL 1.2, 1.21, 1.22, 2.1, 2.21, 2.22, E Sheets)**
2. Provide pull string in all empty AVL conduit.
3. Provide the distribution and install the Lyntec sequenced technical power panels (furnished by SRS) for all technical power as specified in the electrical schedules. **(AVL 1.2, 1.21, 1.22, 2.1, 2.21, 2.22, E Sheets)**
4. Provide all AC power circuits, outlets and panels as listed in the AVL drawings electrical schedules. **(AVL 1.2, 1.21, 1.22, 2.1, 2.21, 2.22, E Sheets)**
5. Clearly label all junction boxes with a permanent marker per designator in AVL drawings, device and conduit schedules. Label all conduits at junction boxes and stub outs. **(AVL 1.2, 1.21, 1.22, 2.1, 2.21, 2.22, E Sheets)**
6. Provide permanent labels on AC power junction boxes directly connected to AVL equipment and all AC outlets with panel designator and breaker number feeding outlet or equipment. **(AVL 2.0.5)**
7. Provide conduits and HV wiring for all tech power, dimming and relay circuits and mains as specified in the AVL electrical schedules. These conduits are not shown in AVL drawings. **(E Sheets)**
8. Install theatrical lighting system panels, relay panels, connection to theatrical light connector boxes and terminations. System panels, relay panels furnished by SRS. Pipe mounted connector boxes installed by SRS, terminated by EC.
9. Provide wire tray under tech booth countertop. **(AVL 1.2, 1.21, 2.21)**
10. Install equipment as listed in AVL sheets as Installed by "EC". **(AVL 1.2, 1.21, 1.22, 2.21, 2.22)**
11. Coordinate house lights, dimmer and relay control with SRS. SRS to specify or approve house light fixtures.
12. Provide the Chapel house lights and low voltage dimming control wiring for house lights (house light LV control jumper cables)
13. Provide inverter, emergency lighting transfer switch and contact closure where LED house lights are used for emergency lighting. Coordinate additional equipment needed with SRS.
14. Accept delivery, unload and store all EC-installed AVL equipment at the jobsite. EC shall coordinate with SRS and provide date range when EC-installed AVL equipment is needed at jobsite.

SRS shall:
1. Furnish all back boxes, theatrical lighting devices, floor boxes, rack pans, plates and panels as designated "supplied by SRS" in AVL drawings to electrical contractor for installation. This includes the Lyntec AV sequenced power panel, AV equipment racks, lighting control & relay panels, surge protection and floor boxes. **(AVL 1.2)**
2. Provide and connect all of the low voltage control system for the dimming, relay & lighting control systems and Lyntec sequenced tech power panels with the exception of house lights and any 0-10v dimming.

DIV 27 – Communication (Non-SRS work)
DIV 27 contractor shall:
1. Provide all computer data network (LAN) drops, structured wiring, fiber, phone system, switches and related cabling per SRS specifications. **(AVL 1.1.1, 2.21, 2.22, 6.0)**
2. Provide all MATV drops, structured wiring, fiber, distribution equipment, related cabling and amplification per SRS specifications. **(AVL 1.1.1, 2.21, 2.22, 6.0)**
3. Owner shall coordinate internet requirement with SRS and provide internet service to facility.

DIV 27.41- Audio-Video Systems
GC shall:
1. Provide secure, dry, clean storage for AVL equipment prior to and during AVL installation. GC shall accept delivery, unload and store all AVL equipment at the jobsite except that equipment designated as EC-installed.
2. Coordinate with SRS and provide date range when GC-installed AVL equipment is needed at jobsite.

EC shall:
1. Install all AVL equipment shown in the AVL drawing set and designated as installed by "EC" **(AVL 1.2)**

Owner shall:
1. Furnish any equipment designated as OFE, OPE, Owner or OFCI in AVL drawings and schedules for SRS installation. Owner shall provide equipment designated as OFOI and coordinate with GC and SRS on installation timing. Church will ensure any existing equipment re-purposed for this project is of good working condition and is available when needed for the installation. **(AVL 1.2, 1.21, 1.22)**

SRS shall:
1. Provide all low voltage, < 90V, wiring required for the installation of the AVL systems and plates, panels and devices designated in the electrical schedule as provided by "SRS" except house lights. All wire, cables, connectors and installation shall be of acceptable type as listed in AVL drawing set. Refer to **AVL 1.2, 6.0.**
2. Provide all AVL equipment as shown in the AVL drawing set. Install all existing AVL equipment shown in the AVL drawing set as furnished by owner, SRS installed (OFCI). SRS must approve any equipment substitutions or alternation to the AVL system design.
3. Provide rigging attachment points from the structure as required for the mounting of AVL equipment except house lights.
4. Provide any additional standard or custom rigging supplies required. All hardware and devices must be load rated and a minimum of 8:1 design factor (DF) must be maintained.
5. Provide CAD drawings showing all AVL equipment and associated low voltage wiring and connections. Drawing will have cable numbers indicated for each wire in the system. These numbers are to be used in labeling all cables in system. Cable labels shall include installation date (month/year), cable number from CAD drawing, source equipment name and connection point as well as destination equipment name and connection point. Labels are to be computer generated and use a self-laminating permanent label stock designed for AVL systems. See **AVL 6.0.4** for details.
6. Provide equipment labels on back of each piece of rack mounted equipment. Provide equipment labels on the front of equipment where the function is not obvious. Table mounted or loose equipment to be labeled one time so they are easily readable by the operator / technicians. See **AVL 6.0.3** for specification.
7. Furnish equipment needed by either the EC or GC for installation will be delivered in a timely manner so that it is on site by the delivery dates indicated by the GC, according to the agreed upon construction schedule provided by the GC.

DIV 27.51.26 – Assistive Listening Systems
SRS shall:
1. Provide audio feed to OFE ADA Assisted Listening System (ALS) for Chapel if needed. Signage by others.

DIV 28.31 – Fire Detection and Alarm
DIV 28.31 contractor shall:
1. Provide contact closure from the FACP at RK-118-01. Contact to be NC, open on alarm or panic.
2. Provide duct detectors and room sensors compatible with the use of theatrical haze in the worship and children's gathering room. Use of heavy theatrical haze or fog by the church MUST NOT trip the fire detection system or cause false alarms. Contractor will be required to change any detectors or sensors which trigger alarm when room is filled with theatrical haze or fog. Recommend combination detectors that will not trip on the presence of haze such as Honeywell SK-Fire-CO or equivalent.

SRS shall:
1. Provide functionality as defined in AVL 1.1.6.

2 Division of Labor

FOR CONSTRUCTION

Stark Raving Solutions
10413 W 84th Terrace | Lenexa, KS 66214
866-275-3261 | 913-383-0243
www.starkravingsolutions.com

100% CD

PHASE II ADDITION TO:
THE SUMMIT
3381 NW CHIPMAN ROAD
LEE'S SUMMIT, MO 64081

PROJECT #: 15-678
ISSUE DATE: 02/05/2020
DRAWN BY: KG, EH
CHECKED BY: JJ

REVISIONS:
1.
2.
3.
4.
5.

SHEET No.
AVL 1.0
AVL General Requirements

Room #	Room	Location	Requirement	# of Network Drops	Notes
N/A	Tech Booth	Below Counter	Network with public internet for updates and programming	2	Install below counter, one on each side of booth
218	Chapel	Outlet Height	Network with public internet for updates and programming	1	Install side stage near equipment rack - outlet height
Various	Various	Behind Displays	Network with public internet for updates and programming	4	Recommended - Install behind each display
			Total:	7	

Note: SRS to install separate control and audio networks for AVL equipment. These networks should be isolated from corporate networks by SRS supplied router. SRS to provide wireless access points (WAP) for control network. Owner IT/IS contact should coordinate wireless and network routing with SRS prior to commissioning.

1 Network Schedule

Room #	Room	Equipment Type	Load Description	BTU / HR (estimate)	Temperature Control Requirements
218	Platform/Chapel	Lighting	Theatrical and House Lights, LED bases	< 30,000	Occupied Room temp, not to exceed 90°F or drop below 32°F. Humidity 10-85%
N/A	Platform	Audio & Video Components, Musical Equipment	Musician Equipment, Audio / Video equipment	< 22,000	Occupied Room temp, not to exceed 90°F or drop below 32°F. Humidity 10-85%
N/A	Tech Booth	AV Equipment	Audio and video control systems, computers Amplifiers / Processors / Network equipment	< 4,500	Ambient room temp range of 64 - 80°F while systems are operating. 34 - 95°F while systems are off. 10-75% humidity should be maintained. Air circulation must be maintained.

BTU estimates based on amplifiers at 1/8 full power using manufacturer's heat tables. Lighting heat loads based on 60% of capacity or 80% of installed fixtures, whichever is greater. Racked equipment based on manufactures heat load specifications or power consumption. Room occupants have NOT been factored into these loads.

2 AVL Heat Loads

Room Noise Criteria Requirements

Room #	Description	PNC	Max SPL (dBc)
205	Senior Paster	40	50
206	Conf. Room	35	45
216	Storage	60	60
N/A	Platform	32	45
218	Chapel	35	45
N/A	Tech Booth	32	45
219	Lobby	50	60
Various	Offices	45	55

Equipment must meet or exceed PNC requirements and must not exceed max SPL. This requirement limits the low frequency noise and vibration that is acceptable.

Definitions:

SPL - Sound Pressure Level - noted in dBc.

PNC - Preferred Noise Criteria - a set of SPL readings at various frequencies describing the background sound level. PNC is used to judge the acceptability of ventilation, mechanical, and other background broad band noise sources.

Preferred Noise Criterion Curve Chart

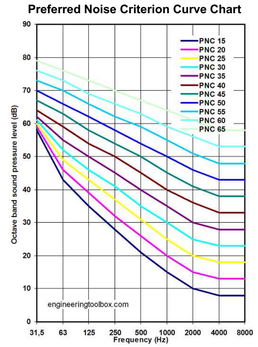

3 Required Noise Criteria

Control of Noise and Vibration

The acoustically critical spaces require control of noise and vibration from mechanical and electrical systems in and around the space to be successful acoustically. See AVL 1.1.3 for list of critical acoustic spaces. Mechanical and electrical systems must be designed from the start to minimize noise and vibration and meet the noise criteria set for the spaces above. **Refer to AVL Facilities Coordination and Acoustic Requirement Report for additional details and specifications.**

Mechanical System Vibration Control and Noise Isolation
Early planning and careful choices of system types, locations and installation methods can achieve a successful acoustical environment for sensitive spaces.
General recommendations include:
- Locate noise producing equipment as far as practical from sensitive spaces. Avoid placing noise producing equipment directly on adjoining walls, floors or ceilings to sensitive spaces.
- Select equipment that is efficient and quiet. Often a small increase in the price of a system can reduce the substantial cost of isolating noisier equipment.
- In-structure or roof mounted air handlers must be isolated by good spring and neoprene isolators from the building structure.
- Position rooftop equipment near supporting columns or major beams.
- Vibration isolators should be mounted directly to the structure where possible. Avoid direct support from lightweight concrete slabs or roof decks.
- Equipment should have extra clearance to avoid accidental touching of nearby building structure.
- Pipes should be connected with resilient connections and isolated from the building structure by mounting on, or hanging from, appropriate isolation devices.
- Pipe connections to vibration-isolated equipment should be made with special flexible connections. This includes all air handlers, pumps and compressors.
- Support all HVAC and plumbing pipes with spring and neoprene isolators.
- Vibration-isolated equipment should be mounted on isolated housekeeping pads. Typical housekeeping pad would be 4" concrete pad mounted sitting on appropriate vibration isolators.
- Pumps and other extremely noisy equipment may require inertia bases or spring supported concrete pads.
- Drinking fountains with chillers should not be located on walls common to noise-sensitive areas. Coolers should be mounted on vibration isolators.
- Isolate elevator hydraulic equipment, including piping, from the building structure using neoprene mountings. Install a hydraulic muffler.

Requirements for HVAC and mechanical Systems
Ducts and plenums
- Use rectangular ductwork for all ductwork serving noise sensitive spaces.
- Use round or oval ductwork for exposed ductwork INSIDE noise sensitive spaces.
- Use high aspect (1.65:1, 4:1) ductwork rather than square ducts. External stiffeners may be required for wide ducts.
- Do not use flexible ductwork to serve noise-sensitive areas.
- Radius elbows should be used to avoid hard corners.
- Turning vanes should be perforated, double-radius type, with sound-absorbing core.
- Plenum spaces must be isolated from other spaces and should not be used within noise critical spaces.
- Internally line all ductwork serving all noise-sensitive spaces with 1" thick 3lb/sf fiberglass duct liner from the air-handling units to the air terminals. This should be included in both the supply and return air ducts.
- Connection of ductwork to fans, fan cases, or fan plenums should be done with flexible sleeves. Install a sleeve with at least 7" slack across a clear metal-to-metal gap of at least 4".
Fan Noise Attenuators
- A silencing plenum or duct silencer should be used at the supply and return of each air handler unit. Silencer should be IAC model LFM or equivalent. Silencer or plenum should be sized appropriately for the PNC and the acoustical rating of the air handler unit.
Duct Velocities
- The following table details the maximum allowable ductwork velocities per the Preferred Noise Criterion established for the noise sensitive rooms

Location	PNC <25	PNC <30	PNC <35	PNC <40
Supply and return main ducts outside of space	1400	1500	1600	1750
Supply and return main ducts within space, limited to within 20' of air openings	700 /800	850 /950	1000 /1150	1400 /1500
Branch supply and return ducts, within 10' of air openings	550 /650	700 /800	800 /900	900 /1050
Individual supply air drops	350	425	500	700
Individual supply air connections	425	500	600	750

Table - Maximum allowable air velocities in ductwork

Duct Terminals
- Ideally the air distribution system should be designed to distribute the air properly without the use of grill diffusers, instead using open-ended ducts and plate diffusers. Multiple smaller air openings are preferable to larger openings.
- Plate diffusers/deflectors should include a top surface lined duct board to reduce noise.
- Where diffusers are necessary, select terminal devices with a PNC rating at least 5-10dB LESS than the recommended PNC rating from the space at the designed velocities.
Volume dampeners and balancing
- The air distribution system should be designed to balance airflow without volume dampers. Where volume dampeners are necessary, splitter dampers should be located external to the room when possible and a minimum of 10' before the duct outlet.
Return Air Openings
- Design return air openings as bare architectural or duct openings. If grills are required, grill must have an open area of at least 65% and return air opening should be oversized to account for the lost opening area.
Fire Dampers
- Locate fire dampers as far from the air terminals as possible. Specify only "out of the air stream" type fire dampers.
Controls
- Do not locate pneumatic thermostats and controls in noise sensitive spaces.
Exhaust and Vent Systems
- Avoid locating fresh air intakes and exhaust air discharges where they may cause unwanted external noise or close to external noise sources that could enter the building through the system.
- Avoid locating systems close to windows or doors where noise may re-enter the building.
- ERV units must be designed to meet the required PNC for noise sensitive spaces.
VAVs
- Select VAV boxes with designed NC ratings at least 5dB lower than room ambient noise level design PNC criterion.
Penetrations
- Airtight seal all duct, pipe and conduit penetrations of all walls in the noise sensitive spaces and equipment rooms.
- Oversize all penetration holes by ½" to 1" and pack clearance with fiber bat insulation and caulk after installation.
- Multiple slab penetrations should be individually sleeved.

Required Information from Mechanical Engineer
- On mechanical design drawings, indicate all duct types, sizes, lining details, air quantities in each duct, diffuser types and air quantities.
- On mechanical drawings, indicate exact equipment locations, required isolation and critical dimensions.
- Details on air flow adjustment and VAV box and silencer system design details including acoustic ratings.
- Detail acoustic requirements of all HVAC units and specify that unit and installed system must meet these requirements.

Electrical System Vibration Control and Noise Isolation
- Make electrical connections to all vibration isolated equipment including pumps, fans, transformers, air handlers, etc. with flexible conduit, no less than 36" in length, and installed with a complete 360-degree loop or "U" shape slack.
- Locate noise-producing equipment as far as practical from sensitive spaces. Avoid placing noise-producing equipment directly on adjoining walls, floors or ceilings to sensitive spaces. Electrical equipment rooms should be located as far from noise sensitive areas as possible.
- Select equipment that is efficient and quiet. Often a small increase in the price of a system can reduce the substantial cost of isolating noisier equipment.
- Vibration isolators should be mounted directly to the structure where possible. Avoid direct support from lightweight concrete slabs or roof decks.
- Equipment should have extra clearance to avoid accidental touching of nearby building structure.
- Vibration-isolated equipment should be mounted on isolated housekeeping pads. Typical housekeeping pad would be 4" concrete pad mounted sitting on appropriate vibration isolators.
- Do not route cables directly between acoustically critical spaces (noise generating space to noise-sensitive space or between two noise sensitive spaces). In some areas, surface mounted fittings will be required to avoid penetration of sound isolating walls or ceilings.
- Do not locate relays in noise-sensitive spaces.
- Do not install clocks, controls or other small equipment with small transformers, relays or motors in noise-sensitive spaces.
- Exit signs, aisle lights and fire annunciators in noise sensitive spaces should be self-powered, LED or incandescent. They should not contain relays, transformers or contactors and must not be fluorescent. Incandescent 220 VAC fixtures are acceptable. A common transformer located outside the noise-sensitive areas should feed low voltage fixtures.
- Fire alarm/life safety systems must be silent under normal operation.
- Do not use emergency lighting with integral transformers in noise-sensitive areas. Do not locate contactors for emergency lighting fixtures in noise-sensitive areas.
Power Distribution
- Oil-cooled transformers are quieter than air-cooled units and are preferred when within 50' of building.
- Use vibration isolation for all transformers.
Penetrations
- Airtight seal all duct, pipe and conduit penetrations of all walls in the noise sensitive spaces and equipment rooms.
- Oversize all penetration holes by ½" to 1" and pack clearance with fiber bat insulation and caulk after installation.
- Multiple slab penetrations should be individually sleeved.
- Single side wall penetrations / boxes should not be located in the same stud bay but should be separated by a minimum of 36".
Lighting Fixtures
- Fluorescent and neon fixtures are not acceptable for the main house lighting in the performance spaces (Worship Spaces). Only full dimming LED lighting systems should be used in these performance spaces, except for lighting designed as work lights or emergency lighting which are not in use during performances.
- In other noise-sensitive spaces where fluorescent lighting is appropriate, use silent electronic ballast. Sylvania QTP2x32TB/UNV PSN-TC and Advance IIC-2S32-SC ballast have been tested and found acceptably quiet. Other ballast should be tested before being approved.
- Do not use SCR utility (switch mounted) dimmers or fixtures using SCR controls for rooms with a NC rating of 30 or less.

4 Control of Noise and Vibration

AVL Facilities Coordination and Acoustic Requirements Report (FCARR)
AVL narrative with technology, infrastructure, acoustic, and building requirements.

AVLA Facilities Meeting
AVLA programming and facilities requirement walk through meeting with church, MEP, architect, and GC held onsite.

AVL signed contract
SRS contract with client on the final scope of the AVL systems. Final scope may affect equipment shown on AVL drawings.

Technology Program Report
AVL narrative with technology budget ranges, equipment plans and functional drawings.

Manufacturer submittals and drawing packages
AVLA manufacturer submittals and design drawings for lighting control systems, building control systems, acoustic treatments, projection screens and other AVL equipment to be installed by GC, EC and SRS.

5 References and External Documents

Emergency / Life Safety Coordination
1. AVL system to provide audio system mute upon contact closure from the fire alarm control panel (FACP).
2. AVL equipment shall not cover or block viewing of life safety/fire alarm signal devices, emergency lighting, or emergency/accessibility signage. **Electrical engineer, fire sprinkler system designer, life safety system designer and architect to review AVL drawing package and coordinate location of devices near AVL equipment with SRS.**
3. Coordinate emergency lighting requirements with SRS.
4. Reference Div. 28.31 in Division of Labor for other requirements.

6 Life and Safety Requirements

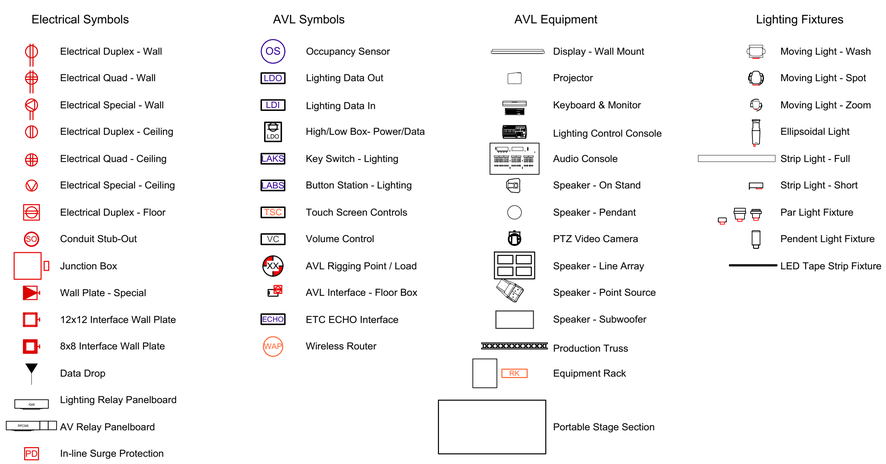

7 AVL Symbol Legend
Scale: 3/16" = 1'-0"

FOR CONSTRUCTION

Stark Raving Solutions
10413 W 84th Terrace | Lenexa, KS 66214
866-275-3261 | 913-383-0243
www.starkravingsolutions.com

FOR REFERENCE ONLY
REFER TO ALL ARCHITECTURAL AND MEP ENGINEERING DRAWINGS FOR CONSTRUCTION DETAILS

NOTICE: ANY REFERENCES TO STRUCTURAL OR ELECTRICAL INFORMATION ARE FOR REFERENCE ONLY; STARK RAVING SOLUTIONS IS NOT LICENSED FOR AND DOES NOT PERFORM STRUCTURAL OR ELECTRICAL ENGINEERING. NO ANALYSIS HAS BEEN MADE BY STARK RAVING SOLUTIONS CONCERNING EITHER AREA. THE SEAL OF A REGISTERED PROFESSIONAL ENGINEER WILL APPEAR ON THESE DRAWINGS IF THEY HAVE BEEN REVIEWED AND APPROVED BY A LICENSED ENGINEER.

100% CD

PHASE II ADDITION TO:
THE SUMMIT
3381 NW CHIPMAN ROAD
LEE'S SUMMIT, MO 64081

PROJECT #: 15-678
ISSUE DATE: 02/05/2020
DRAWN BY: KG, EH
CHECKED BY: JJ

REVISIONS:
1.
2.
3.
4.
5.

SHEET No.

AVL 1.1
AVL Schedules and References

Device (AVL 1.10.2) - **Room #** (ex. 103, 010) **- # Quantity**
Ex. RK-110-1. RK-110-2, SP-501-01… SP-501-17

XXXX-XXX-xx

- Location - Room # or Stage/House location ex. 103, HL (house left), USL (up stage left)
- Quantity - Numerical when more than one type of device per room ex. DISP-103-01, DISP-103-03, RK-100-02
- Designator description. See AVL 1.10.2 for descriptions ex. CAM, LAR, RK, etc.

1 AVL Designator Key

ANT Antenna
CAM Camera
CP Control Panel
CURT Curtain
DISP Display
FB Floor Box
JBOX Junction Box
LAR Line Array Speaker
LED LED Video Screen
LDO Lighting Data Out
LDI Lighting Data Input
L#BS Lighting Architectural Button Station

LP Lighting Position
LC Lighting Controller
OC Occupancy Sensor
PNL Panel
- **AV** AV Isolated Power Panel
- **LTG** Lighting Power Panel
- **LRP** Lighting Relay Panel
- **LDP** Lighting Dimmer Panel
- **LCS** Lighting Company Switch

Typ. Example: PNL-AV#-Room#
Typ. Circuit Ex.: AV#-##

PS Projection Screen
PJ Projector
RK Rack
SP Speaker
VC Volume Control
WAP Wireless Access Point
WP Wall Plate
WT Wire Tray

2 AVL Designator Description

C Ceiling
F Flush
H Hidden
REC Recessed
D Desk/Tabletop
FL Floor
P Pipe
S Surface

3 Mounting Type Abbreviations

Designator		Location	Device Make	Device Model	Box Make	Box Model	Plate Make	Plate Model	Device Mounting Type	Box Mounting Type	Signal Group	Device Installation Height	Box Installation Height	Weight (LBS.)	Device by	Device install	Box by	Box install	Plate by	Plate install	Notes
ANT	218-01	Chapel 218	RF Venue	DFIN	Generic	1 gang	Generic	Split/Brush Plate	S	F	D	11'0"	11'0"	< 5	SRS	SRS	N/A	N/A	N/A	N/A	
SP	219-01	Lobby 219	QSC	AD-P.SUB	Generic	2 gang	Generic	Cover	C	C	S	12' AFF	Ceiling	17 lbs	SRS	SRS	EC	EC	EC	EC	Align bottom of speakers with bottom of light fixtures.
SP	219-02	Lobby 219	QSC	AD-P4T	Generic	2 gang	Generic	Cover	C	C	S	12' AFF	Ceiling	< 20	SRS	SRS	EC	EC	EC	EC	Align bottom of speakers with bottom of light fixtures.
SP	219-03	Lobby 219	QSC	AD-P4T	Generic	2 gang	Generic	Cover	C	C	S	12' AFF	Ceiling	< 20	SRS	SRS	EC	EC	EC	EC	Align bottom of speakers with bottom of light fixtures.
SP	219-04	Lobby 219	QSC	AD-P4T	Generic	2 gang	Generic	Cover	C	C	S	12' AFF	Ceiling	< 20	SRS	SRS	EC	EC	EC	EC	Align bottom of speakers with bottom of light fixtures.
SP	219-05	Lobby 219	QSC	AD-P4T	Generic	2 gang	Generic	Cover	C	C	S	12' AFF	Ceiling	< 20	SRS	SRS	EC	EC	EC	EC	Align bottom of speakers with bottom of light fixtures.
SP	C-01	Platform 218	QSC	E12	N/A	N/A	N/A	N/A	C	N/A	S		N/A	55 lbs	SRS	SRS	N/A	N/A	N/A	N/A	
SP	C-02	Platform 218	QSC	E12	N/A	N/A	N/A	N/A	C	N/A	S		N/A	55 lbs	SRS	SRS	N/A	N/A	N/A	N/A	
SP	HL-01	Platform 218	QSC	E112	N/A	N/A	N/A	N/A	C	N/A	S	Ceiling	N/A	60 lbs	SRS	SRS	N/A	N/A	N/A	N/A	
SP	HR-01	Platform 218	QSC	E112	N/A	N/A	N/A	N/A	C	N/A	S	Ceiling	N/A	60 lbs	SRS	SRS	N/A	N/A	N/A	N/A	
SP	ORGAN	Platform 218	TBD	TBD	TBD	TBD	N/A	N/A	S	N/A	D	TBD	TBD	< 100	FUT	FUT	FUT	FUT	N/A	N/A	Quantity, location, and installtion or organ speaker TBD. FUT.
SP	SUB-HL	Platform 218	QSC	KS218	N/A	N/A	N/A	N/A	FL	N/A	D	Floor	N/A	105	SRS	SRS	N/A	N/A	N/A	N/A	
SP	SUB-HR	Platform 218	QSC	KS218	N/A	N/A	N/A	N/A	FL	N/A	D	Floor	N/A	105	SRS	SRS	N/A	N/A	N/A	N/A	

4 Audio Box and Device Schedule

	Designator		Location	Device Make	Device Model	Box Make	Box Model	Plate Make	Plate Model	Device Mounting Type	Box Mounting Type	Signal Group	Device Installation Height	Box Installation Height	Weight (LBS.)	Device by	Device install	Box by	Box install	Plate by	Plate install	Notes
future	DISP	205-01	Senior Pastor 205	OFE	OFE	Arlington	TVBS613	Generic	Split/Brush Plate	S	F	D	60" CL	60" CL	< 100	OFE	SRS	EC	EC	EC	EC	SRS provides mount and installs OFE display. SRS recommends a 43" display.
future	DISP	206-01	Conf. Room 206	OFE	OFE	Arlington	TVBS613	Generic	Split/Brush Plate	S	F	D	48" BOE	60" CL	< 100	OFE	SRS	EC	EC	EC	EC	SRS provides mount and installs OFE display. SRS recommends a 43" display.
future	DISP	218-01	Chapel 218	OFE	OFE	Arlington	TVBS613	Generic	Split/Brush Plate	S	F	D	108" CL	108" CL	< 100	OFE	SRS	EC	EC	EC	EC	SRS provides mount and installs OFE display. SRS recommends a 75" display minimum.
	DISP	218-02	Tech Booth	OFE	OFE	Arlington	TVBS613	Generic	Split/Brush Plate	S	F	D	108" CL	108" CL	< 100	OFE	SRS	EC	EC	EC	EC	SRS provides mount and installs OFE display. SRS recommends a 75" display minimum.
	DISP	218-CONF	Chapel 218	OFE	OFE	N/A	N/A	N/A	N/A	FL	N/A	D	Floor	N/A	< 100	OFE	SRS	N/A	N/A	N/A	N/A	OFE display on Chief PFQUB cart by SRS.
	DISP	219-01	Lobby 219	OFE	OFE	Arlington	TVBS613	Generic	Split/Brush Plate	S	F	D	84" CL	84" CL	< 100	OFE	SRS	EC	EC	EC	EC	SRS provides mount and installs OFE display. SRS recommends a 65" display.
	DISP	219-02	Lobby 219	OFE	OFE	Arlington	TVBS613	Generic	Split/Brush Plate	S	F	D	84" CL	84" CL	< 100	OFE	SRS	EC	EC	EC	EC	SRS provides mount and installs OFE display. SRS recommends a 65" display.
	DISP	219-03	Lobby 219	OFE	OFE	Arlington	TVBS613	Generic	Split/Brush Plate	S	F	D	84" CL	84" CL	< 100	OFE	SRS	EC	EC	EC	EC	SRS provides mount and installs OFE display. SRS recommends a 65" display.
	PJ	218-HL	Chapel 218	Panasonic	PT-VZ470U	Generic	1 gang	Generic	Split/Brush	C	C	D	12' AFF	Ceiling	< 30	SRS	SRS	EC	EC	EC	EC	
	PJ	218-HR	Chapel 218	Panasonic	PT-VZ470U	Generic	1 gang	Generic	Split/Brush	C	C	D	12' AFF	Ceiling	< 30	SRS	SRS	EC	EC	EC	EC	
	PS	218-HL	Chapel 218	Da-Lite	24758V	N/A	N/A	N/A	N/a	C	N/A	N/A	6'6" AFF	N/A	< 75	SRS	N/A	N/A	N/A	N/A	N/A	
	PS	218-HR	Chapel 218	Da-Lite	24758V	N/A	N/A	N/A	N/a	C	N/A	N/A	6'6" AFF	N/A	< 75	SRS	N/A	N/A	N/A	N/A	N/A	

5 Video Box and Device Schedule

FOR CONSTRUCTION

SRS
Stark Raving Solutions
10413 W 84th Terrace | Lenexa, KS 66214
866-275-3261 | 913-383-0243
www.starkravingsolutions.com

FOR REFERENCE ONLY
REFER TO ALL ARCHITECTURAL AND MEP ENGINEERING DRAWINGS FOR CONSTRUCTION DETAILS

NOTICE: ANY REFERENCES TO STRUCTURAL OR ELECTRICAL INFORMATION ARE FOR REFERENCE ONLY; STARK RAVING SOLUTIONS IS NOT LICENSED FOR AND DOES NOT PERFORM STRUCTURAL OR ELECTRICAL ENGINEERING. NO ANALYSIS HAS BEEN MADE BY STARK RAVING SOLUTIONS CONCERNING EITHER AREA. THE SEAL OF A REGISTERED PROFESSIONAL ENGINEER WILL APPEAR ON THESE DRAWINGS IF THEY HAVE BEEN REVIEWED AND APPROVED BY A LICENSED ENGINEER.

100% CD

PHASE II ADDITION TO:
THE SUMMIT
3381 NW CHIPMAN ROAD
LEE'S SUMMIT, MO 64081

PROJECT #: 15-678
ISSUE DATE: 02/05/2020
DRAWN BY: KG, EH
CHECKED BY: JJ

REVISIONS:
1.
2.
3.
4.
5.

SHEET No.
AVL 1.2
AVL Device Schedules

Device (AVL 1.10.2) - **Room #** (ex. 103, 010) **- # Quantity**
Ex. RK-110-1. RK-110-2, SP-501-01… SP-501-17

XXXX-XXX-xx

- Location - Room # or Stage/House location ex. 103, HL (house left), USL (up stage left)
- Quantity - Numerical when more than one type of device per room ex. DISP-103-01, DISP-103-03, RK-100-02
- Designator description. See AVL 1.10.2 for descriptions ex. CAM, LAR, RK, etc.

1 AVL Designator Key

ANT Antenna
CAM Camera
CP Control Panel
CURT Curtain
DISP Display
FB Floor Box
JBOX Junction Box
LAR Line Array Speaker
LED LED Video Screen
LDO Lighting Data Out
LDI Lighting Data Input
L#BS Lighting Architectural Button Station
LP Lighting Position
LC Lighting Controller
OC Occupancy Sensor
PNL Panel
- **AV** AV Isolated Power Panel
- **LTG** Lighting Power Panel
- **LRP** Lighting Relay Panel
- **LDP** Lighting Dimmer Panel
- **LCS** Lighting Company Switch
- Typ. Example: PNL-AV#-Room#
- Typ. Circuit Ex.: AV#-##

PS Projection Screen
PJ Projector
RK Rack
SP Speaker
VC Volume Control
WAP Wireless Access Point
WP Wall Plate
WT Wire Tray

2 AVL Designator Description

C Ceiling
F Flush
H Hidden
REC Recessed
D Desk/Tabletop
FL Floor
P Pipe
S Surface

3 Mounting Type Abbreviations

Designator		Location	Device Make	Device Model	Box Make	Box Model	Plate Make	Plate Model	Device Mounting Type	Box Mounting Type	Signal Group	Device Installation Height	Box Installation Height	Weight (LBS.)	Device by	Device install	Box by	Box install	Plate by	Plate install	Notes
ECHO	TB-01	Tech Booth	ETC	EACC	N/A	N/A	N/A	N/A	S	F	D	Above counter	Above counter	< 5	SRS	SRS	N/A	N/A	N/A	N/A	Shares box with L2BS-TB-01.
L2BS	218-01	Chapel 218	ETC	2-button	Generic	1 gang	ETC	LABS Cover	F	F	D	Switch	Switch	< 5	SRS	SRS	EC	EC	SRS	SRS	
L2BS	218-02	Chapel 218	ETC	2-button	Generic	1 gang	ETC	LABS Cover	F	F	D	Switch	Switch	< 5	SRS	SRS	EC	EC	SRS	SRS	
L2BS	TB-01	Tech Booth	ETC	2-button	Generic	2 gang deep	ETC	2 gang Decora cover	F	F	D	Above counter	Above counter	< 5	SRS	SRS	EC	EC	SRS	SRS	Shares box with ECHO-TB-01
LDO	218-01	Chapel 218	Pathway	5102	Generic	2 gang deep	Generic	1 gang mudring	S	C	D	Ceiling	Ceiling	< 5	SRS	SRS	EC	EC	EC	EC	SRS to provide 1 gang Decora plate.
LDO	218-02	Chapel 218	Pathway	5102	Generic	2 gang deep	Generic	1 gang mudring	S	C	D	Ceiling	Ceiling	< 5	SRS	SRS	EC	EC	EC	EC	SRS to provide 1 gang Decora plate.
LDO	218-03	Chapel 218	Pathway	5102	Generic	2 gang deep	Generic	1 gang mudring	S	C	D	Ceiling	Ceiling	< 5	SRS	SRS	EC	EC	EC	EC	SRS to provide 1 gang Decora plate.
LDO	218-04	Chapel 218	Pathway	5102	Generic	2 gang deep	Generic	1 gang mudring	S	C	D	Ceiling	Ceiling	< 5	SRS	SRS	EC	EC	EC	EC	SRS to provide 1 gang Decora plate.
LP	1ST-ELEC	Platform 218	Generic	1.5" Pipe	N/A	N/A	N/A	N/A	C	N/A	N/A	13' AFF	N/A	AVL 1.25	SRS	SRS	N/A	N/A	N/A	N/A	
LP	2ND-ELEC	Platform 218	Generic	1.5" Pipe	N/A	N/A	N/A	N/A	C	N/A	N/A	13' AFF	N/A	AVL 1.25	SRS	SRS	N/A	N/A	N/A	N/A	
LP	FOH-01	Chapel 218	Generic	1.5" Pipe	N/A	N/A	N/A	N/A	C	N/A	N/A	13' AFF	N/A	AVL 1.25	SRS	SRS	N/A	N/A	N/A	N/A	
LP	FOH-02	Chapel 218	Generic	1.5" Pipe	N/A	N/A	N/A	N/A	C	N/A	N/A	13' AFF	N/A	AVL 1.25	SRS	SRS	N/A	N/A	N/A	N/A	

4 Lighting Box and Device Schedule

Designator		Location	Device Make	Device Model	Box Make	Box Model	Plate Make	Plate Model	Device Mounting Type	Box Mounting Type	Signal Group	Device Installation Height	Box Installation Height	Weight (LBS.)	Device by	Device install	Box by	Box install	Plate by	Plate install	Notes
CP	219-01	Lobby 219	Axon	C1	Generic	1 gang	N/A	N/A	S	F	D	56" CL	56" CL	< 5	SRS	SRS	EC	EC	N/A	N/A	In base option, TSC is replaced with a standard volume control.
CP	TB-01	Tech Booth	QSC	TSC-55W-G2	FSR	DSKB-1G	N/A	N/A	N/A	S	D	Countertop	Countertop	< 5	SRS	SRS	SRS	SRS	N/A	N/A	Touchscreen control in tabletop box. Enough service loop to locate anywhere in tech booth.
CURT	218-02 (FUT)	Platform 218	TBD	TBD	N/A	N/A	N/A	N/A	P	N/A	N/A	Pipe	N/A	TBD	FUT	N/A	N/A	N/A	N/A	N/A	Curtain valance.
CURT	218-HL	Platform 218	Quick Stage Inc	QSPP12	N/A	N/A	N/A	N/A	FL	N/A	N/A	Floor	N/A	TBD	SRS	SRS	N/A	N/A	N/A	N/A	Pipe and drape urtain leg
CURT	218-HR	Platform 218	Quick Stage Inc	QSPP12	N/A	N/A	N/A	N/A	FL	N/A	N/A	Floor	N/A	TBD	SRS	SRS	N/A	N/A	N/A	N/A	Pipe and drape urtain leg
FB	206-01	Conf. Room 206	FSR	FL-200	FSR	FL-200	RCI Custom	Custom	FL	FL	D	Slab	Slab	< 25	SRS	SRS	SRS	EC	SRS	SRS	
FB	CAM-HL	Chapel 218	FSR	FL-200	FSR	FL-200	RCI Custom	Custom	FL	FL	D	Slab	Slab	< 25	SRS	SRS	SRS	EC	SRS	SRS	
FB	CAM-HR	Chapel 218	FSR	FL-200	FSR	FL-200	RCI Custom	Custom	FL	FL	D	Slab	Slab	< 25	SRS	SRS	SRS	EC	SRS	SRS	
FB	CONF-HL	Chapel 218	FSR	FL-200	FSR	FL-200	RCI Custom	Custom	FL	FL	D	Slab	Slab	< 25	SRS	SRS	SRS	EC	SRS	SRS	
FB	CONF-HR	Chapel 218	FSR	FL-200	FSR	FL-200	RCI Custom	Custom	FL	FL	D	Slab	Slab	< 25	SRS	SRS	SRS	EC	SRS	SRS	
JBOX	206-01	Conf. Room 206	N/A	N/A	Hoffman	ASE 8x8x4NK	Generic	Cover	N/A	S	D	N/A	Above Ceiling	< 25	N/A	N/A	EC	EC	EC	EC	
JBOX	216-01	Storage 216	N/A	N/A	Generic	12x12x6	Generic	Cover	S	S	HV, D, S	N/A	Panel	< 20 lbs	N/A	N/A	EC	EC	EC	EC	Outlet inside JBOX.
JBOX	219-01	Lobby 219	N/A	N/A	Hoffman	ASE 8x8x4NK	Generic	Cover	N/A	S	D	N/A	Above Structure	< 25	N/A	N/A	EC	EC	EC	EC	
JBOX	TB-01	Tech Booth	N/A	N/A	Generic	NEMA 1 Trough 6x6x24	Generic	Cover	F	F	M, D, S	Outlet	Outlet	< 20 lbs	N/A	N/A	EC	EC	EC	EC	
PNL	216-01	Storage 216	Middle Atlantic	PD-HW15-SP	N/A	N/A	N/A	N/A	S	S	HV	Panel	N/A	TBD	EC	EC	N/A	N/A	N/A	N/A	Circuit AV3:2
PNL	216-02	Storage 216	Middle Atlantic	PD-HW15-SP	N/A	N/A	N/A	N/A	S	S	HV	Panel	N/A	TBD	EC	EC	N/A	N/A	N/A	N/A	Circuit AV3:4
PNL	216-03	Storage 216	Middle Atlantic	PD-HW15-SP	N/A	N/A	N/A	N/A	S	S	HV	Panel	N/A	TBD	EC	EC	N/A	N/A	N/A	N/A	Circuit AV3:11
PNL	216-04	Storage 216	Middle Atlantic	PD-HW15-SP	N/A	N/A	N/A	N/A	S	S	HV	Panel	N/A	TBD	EC	EC	N/A	N/A	N/A	N/A	Circuit AV3:15
PNL	216-05	Storage 216	Middle Atlantic	PD-HW15-SP	N/A	N/A	N/A	N/A	S	S	HV	Panel	N/A	TBD	EC	EC	N/A	N/A	N/A	N/A	Circuit AV3:16
PNL	218-01	Chapel 218	LynTec	XRM 20	N/A	N/A	N/A	N/A	S	N/A	HV, D	16" AFF	N/A	VIF	SRS	EC	N/A	N/A	N/A	N/A	Circuit AV3:15
PNL	218-02	Chapel 218	LynTec	XRM 20	N/A	N/A	N/A	N/A	S	N/A	HV, D	16" AFF	N/A	VIF	SRS	EC	N/A	N/A	N/A	N/A	Circuit AV3:16
PNL	AV3	Storage 216	Generic	Panel	N/A	N/A	N/A	N/A	S	S	HV	Panel	N/A	< 200	EC	EC	N/A	N/A	N/A	N/A	
PNL	LRP3	Storage 216	ETC	UFMP8	N/A	N/A	N/A	N/A	S	N/A	HV, D	Panel	N/A	VIF	SRS	EC/SRS	N/A	N/A	N/A	N/A	EC to wire HV, SRS to wire LV.
PNL	TH1	Storage 216	Generic	Power Panel	N/A	N/A	N/A	N/A	S	N/A	HV	Panel	N/A	VIF	EC	EC	N/A	N/A	N/A	N/A	
PNL	TP1	Exist.	LynTec	Exist.	N/A	N/A	N/A	N/A	S	N/A	HV, D	Panel	N/A	VIF	Exist.	EC	N/A	N/A	N/A	N/A	Existing technical power panel.
PNL	TP2	Exist.	LynTec	Exist.	N/A	N/A	N/A	N/A	S	N/A	HV, D	Panel	N/A	VIF	Exist.	EC	N/A	N/A	N/A	N/A	Existing technical power panel.
RISER	218	Platform 218	TBD	TBD	N/A	N/A	N/A	N/A	FL	N/A	N/A	Floor	N/A	TBD	Owner	N/A	N/A	N/A	N/A	N/A	3-step portable choir risers
RK	105-01	Jan/Stor 105	Middle Atlantic	SPM4	N/A	N/A	N/A	N/A	S	N/A	All	48" CL	N/A	< 100	SRS	SRS	N/A	N/A	N/A	N/A	
RK	218-01	Platform 218	ProX		N/A	N/A	N/A	N/A	FL	N/A	N/A	Floor	N/A	TBD	SRS	SRS	N/A	N/A	N/A	N/A	
RK	ORGAN	TBD	TBD	TBD	TBD	TBD	TBD	TBD	S	N/A	D	TBD	TBD	< 100	FUT	FUT	FUT	FUT	FUT	FUT	Organ rack and amplifiers installation and wiring TBD. FUT.
RK	TB-01	Tech Booth	TBD	TBD	N/A	N/A	N/A	N/A	FL	N/A	N/A	Floor	N/A	TBD	SRS	N/A	N/A	N/A	N/A	N/A	
STAGE	218	Platform 218	TBD	TBD	N/A	N/A	N/A	N/A	FL	N/A	N/A	Floor	N/A	TBD	Owner	N/A	N/A	N/A	N/A	N/A	16" portable platform
WAP	218-01	Chapel 218	Ubiquiti	UniFi AC Lite	N/A	N/A	N/A	N/A	P	N/A	D	PJ Pipe	N/A	< 5	SRS	SRS	N/A	N/A	N/A	N/A	Mount WAP to PJ pipe.
WP	218-01	Chapel 218	RCI	Custom	Hoffman	ASE12x12x4NK	Whirlwind	WFF12x12x1B	F	F	M, D, S	Outlet	Outlet	< 20 lbs	SRS	SRS	SRS	EC	SRS	SRS	
WP	TB-01	Tech Booth	Whirlwind	WFF12x12x1B	Hoffman	ASE12x12x4NK	RCI	Custom	F	F	M, D, S	Outlet	Outlet	< 20 lbs	SRS	SRS	SRS	EC	SRS	SRS	
WP	TB-02	Tech Booth	N/A	N/A	Generic	1 gang	Generic	Split/Brush Plate	N/A	F	D	Above Countertop	N/A	< 5 lbs	N/A	N/A	EC	EC	EC	EC	
WT	TB-01	Tech Booth	Generic	8" Wire Tray	N/A	N/A	N/A	N/A	S	N/A	All	TBD	N/A	< 25	EC	N/A	N/A	N/A	N/A	N/A	Install 10" below counter top
WP	205-01	Senior Pastor 205	Generic	HDMI WP	Generic	1 gang deep	Generic	Generic	s	s	M	outlet	outlet	<5	SRS	SRS	EC	EC	SRS	SRS	
WP	206-01	Conference RM 206	Generic	HDMI WP	Generic	1 gang deep	Generic	Generic	s	s	M	outlet	outlet	<5	SRS	SRS	EC	EC	SRS	SRS	

5 Infrastructure Box and Device Schedule

FOR CONSTRUCTION

Stark Raving Solutions
10413 W 84th Terrace | Lenexa, KS 66214
866-275-3261 | 913-383-0243
www.starkravingsolutions.com

FOR REFERENCE ONLY
REFER TO ALL ARCHITECTURAL AND MEP ENGINEERING DRAWINGS FOR CONSTRUCTION DETAILS

NOTICE: ANY REFERENCES TO STRUCTURAL OR ELECTRICAL INFORMATION ARE FOR REFERENCE ONLY; STARK RAVING SOLUTIONS IS NOT LICENSED FOR AND DOES NOT PERFORM STRUCTURAL OR ELECTRICAL ENGINEERING. NO ANALYSIS HAS BEEN MADE BY STARK RAVING SOLUTIONS CONCERNING EITHER AREA. THE SEAL OF A REGISTERED PROFESSIONAL ENGINEER WILL APPEAR ON THESE DRAWINGS IF THEY HAVE BEEN REVIEWED AND APPROVED BY A LICENSED ENGINEER.

100% CD

PHASE II ADDITION TO:
THE SUMMIT
3381 NW CHIPMAN ROAD
LEE'S SUMMIT, MO 64081

PROJECT #: 15-678
ISSUE DATE: 02/05/2020
DRAWN BY: KG, EH
CHECKED BY: JJ

REVISIONS:
1.
2.
3.
4.
5.

SHEET No.
AVL 1.21
AVL Device Schedules

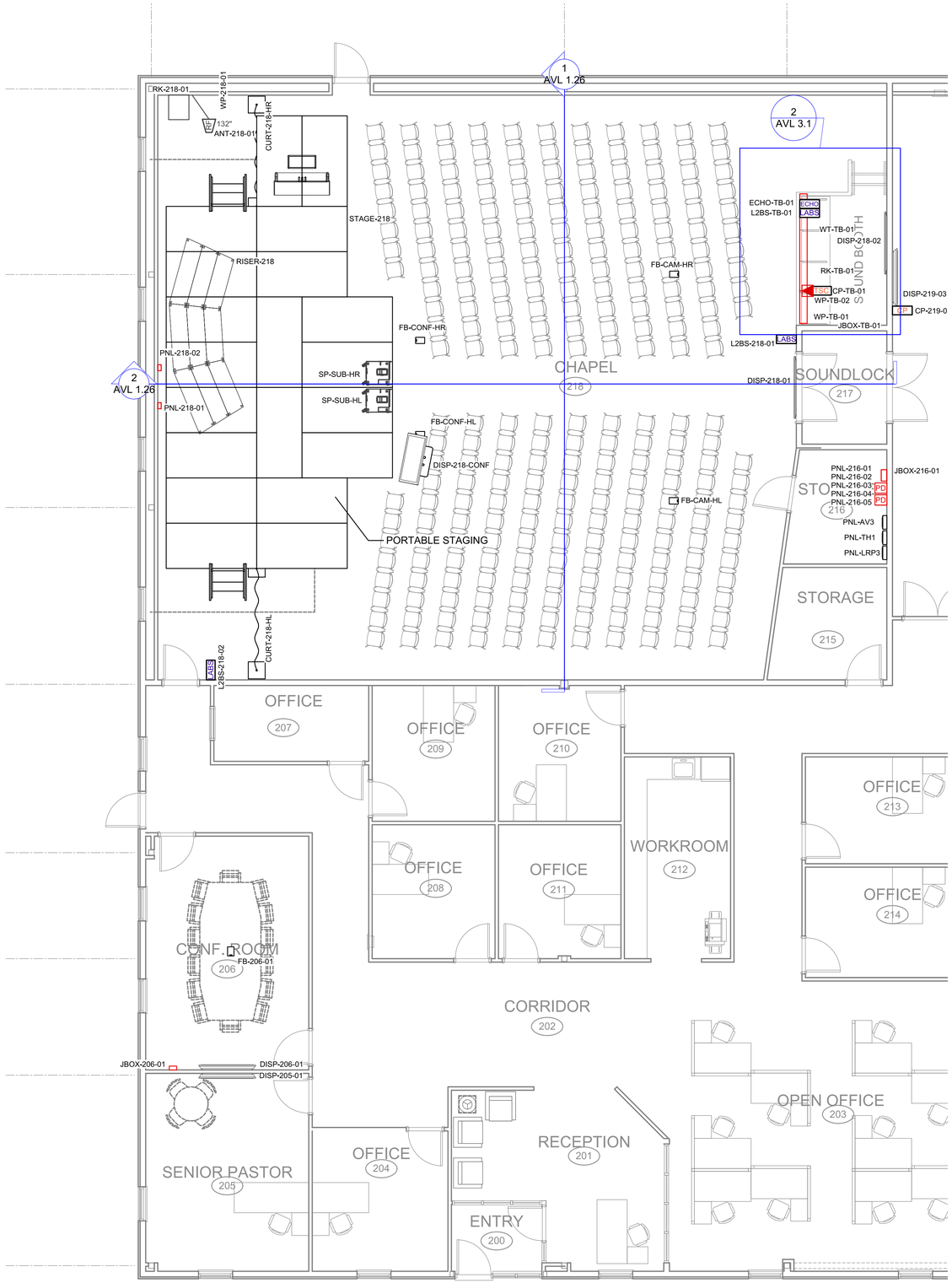

1 Chapel & Office AVL Floor Plan
Scale: 3/16" = 1'

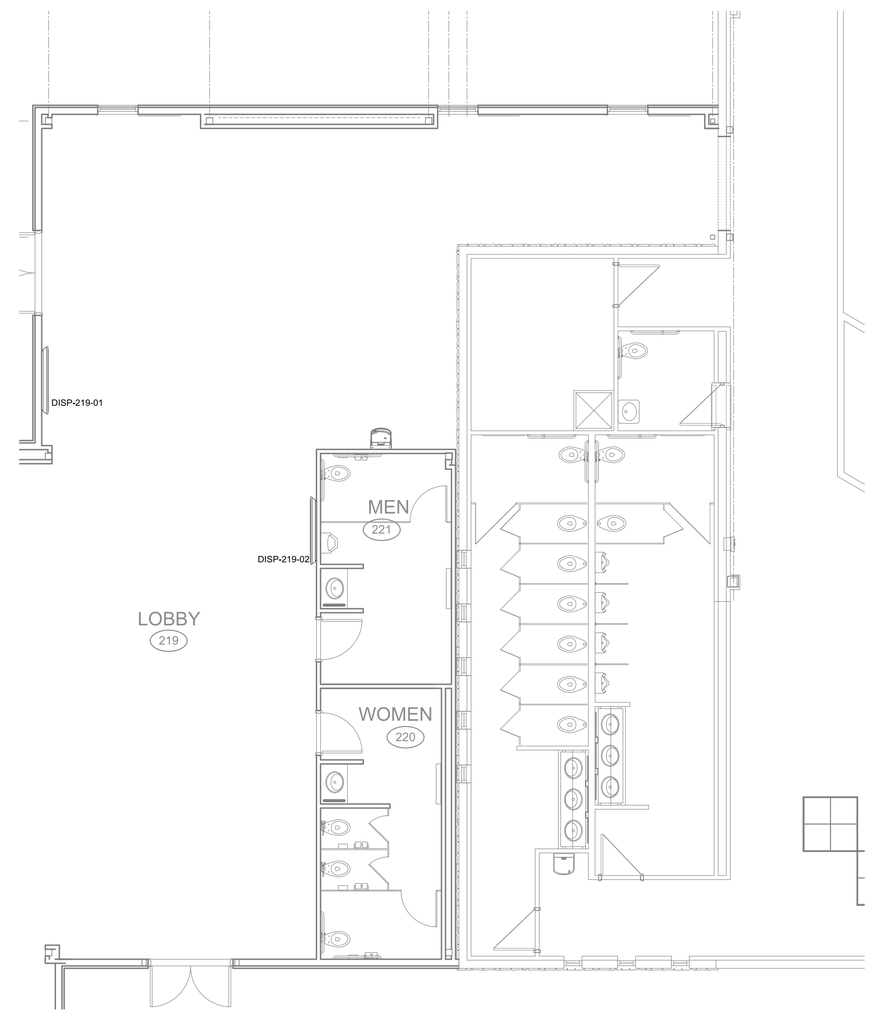

2 Lobby AVL Floor Plan
Scale: 3/16" = 1'

FOR CONSTRUCTION

Stark Raving Solutions
10413 W 84th Terrace | Lenexa, KS 66214
866-275-3261 | 913-383-0243
www.starkravingsolutions.com

FOR REFERENCE ONLY
REFER TO ALL ARCHITECTURAL AND MEP ENGINEERING DRAWINGS FOR CONSTRUCTION DETAILS

NOTICE: ANY REFERENCES TO STRUCTURAL OR ELECTRICAL INFORMATION ARE FOR REFERENCE ONLY; STARK RAVING SOLUTIONS IS NOT LICENSED FOR AND DOES NOT PERFORM STRUCTURAL OR ELECTRICAL ENGINEERING. NO ANALYSIS HAS BEEN MADE BY STARK RAVING SOLUTIONS CONCERNING EITHER AREA. THE SEAL OF A REGISTERED PROFESSIONAL ENGINEER WILL APPEAR ON THESE DRAWINGS IF THEY HAVE BEEN REVIEWED AND APPROVED BY A LICENSED ENGINEER.

100% CD

PHASE II ADDITION TO:
THE SUMMIT
3381 NW CHIPMAN ROAD
LEE'S SUMMIT, MO 64081

PROJECT #: 15-678
ISSUE DATE: 02/05/2020
DRAWN BY: KG, EH
CHECKED BY: JJ

REVISIONS:
1.
2.
3.
4.
5.

SHEET No.
AVL 1.22
AVL Equipment Floor Plan

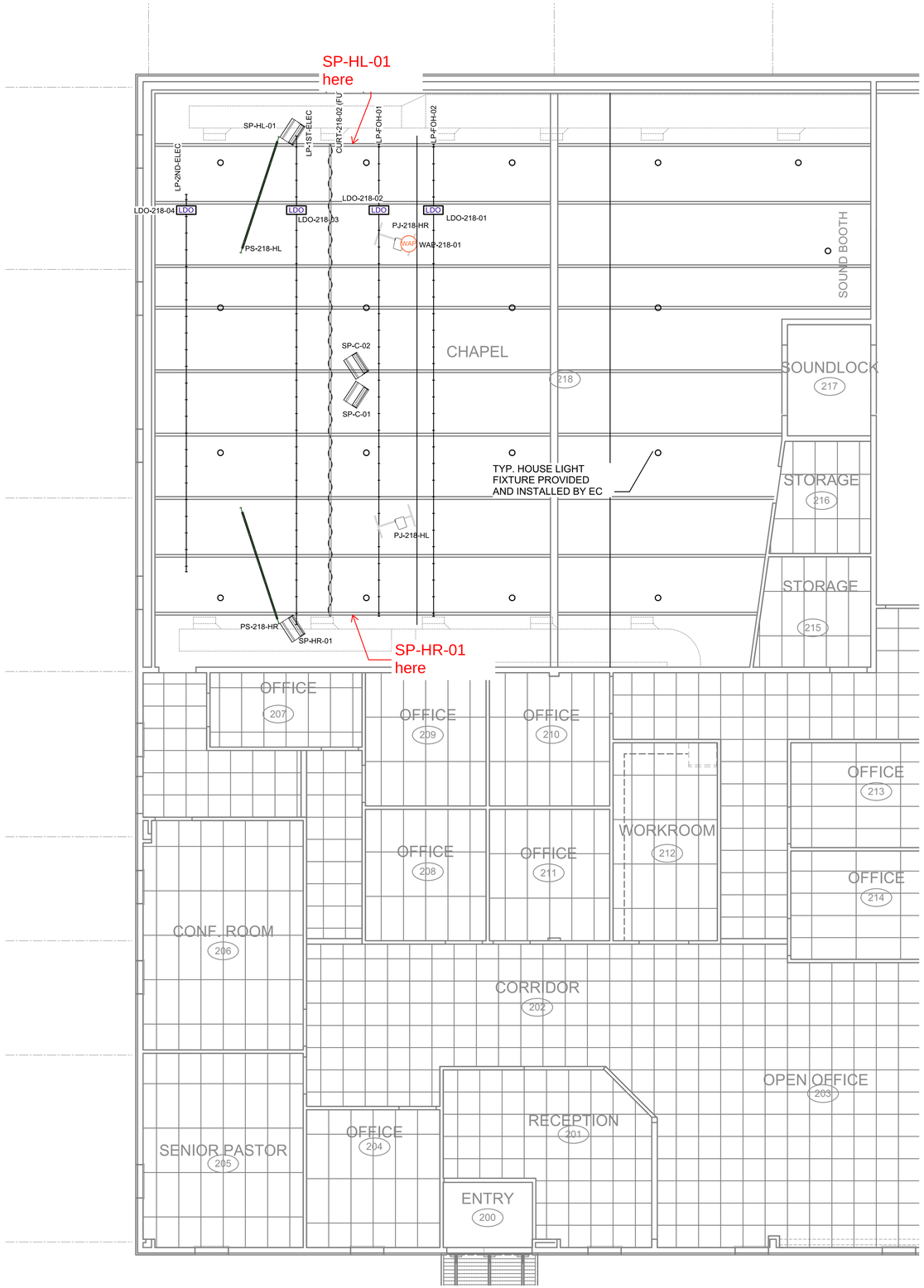

1 Chapel & Office AVL Ceiling Plan
Scale: 3/16" = 1'

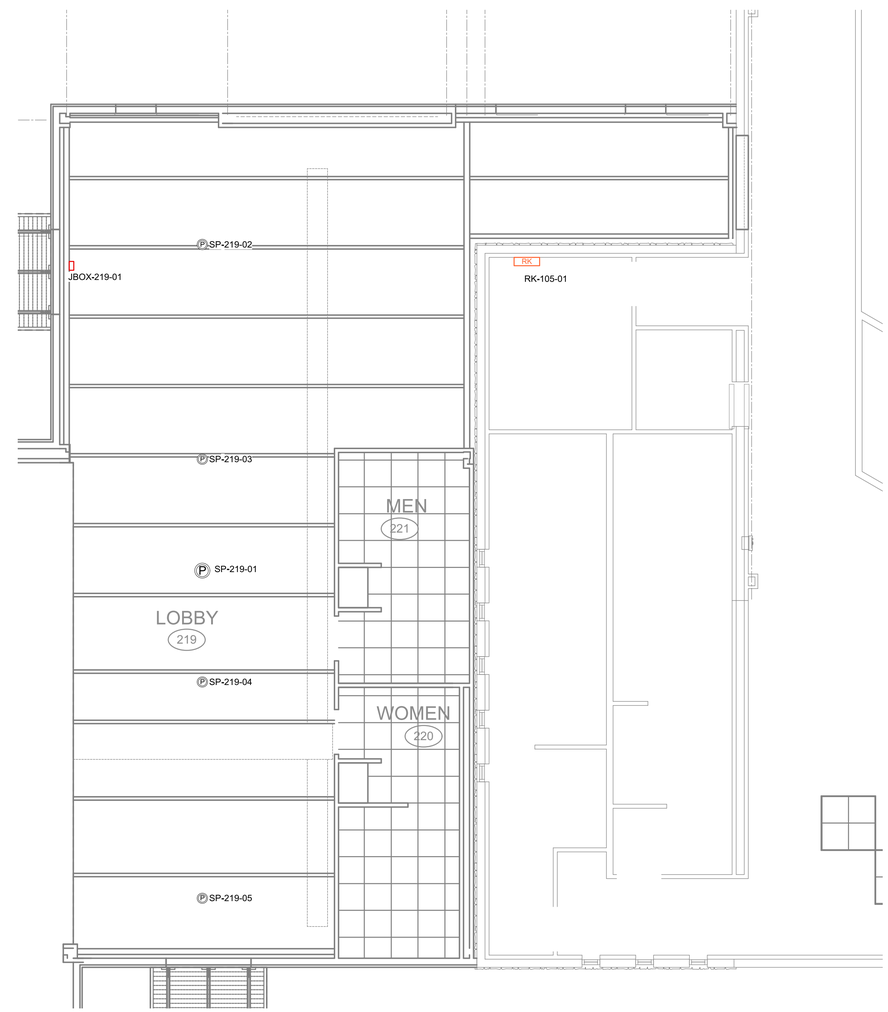

2 Lobby AVL Ceiling Plan
Scale: 3/16" = 1'

FOR CONSTRUCTION

Stark Raving Solutions
10413 W 84th Terrace | Lenexa, KS 66214
866-275-3261 | 913-383-0243
www.starkravingsolutions.com

FOR REFERENCE ONLY
REFER TO ALL ARCHITECTURAL AND MEP ENGINEERING DRAWINGS FOR CONSTRUCTION DETAILS

NOTICE: ANY REFERENCES TO STRUCTURAL OR ELECTRICAL INFORMATION ARE FOR REFERENCE ONLY; STARK RAVING SOLUTIONS IS NOT LICENSED FOR AND DOES NOT PERFORM STRUCTURAL OR ELECTRICAL ENGINEERING. NO ANALYSIS HAS BEEN MADE BY STARK RAVING SOLUTIONS CONCERNING EITHER AREA. THE SEAL OF A REGISTERED PROFESSIONAL ENGINEER WILL APPEAR ON THESE DRAWINGS IF THEY HAVE BEEN REVIEWED AND APPROVED BY A LICENSED ENGINEER.

100% CD

PHASE II ADDITION TO:
THE SUMMIT
3381 NW CHIPMAN ROAD
LEE'S SUMMIT, MO 64081

PROJECT #: 15-678
ISSUE DATE: 02/05/2020
DRAWN BY: KG, EH
CHECKED BY: JJ

REVISIONS:
1.
2.
3.
4.
5.

SHEET No.
AVL 1.23
AVL Equipment Ceiling Plan

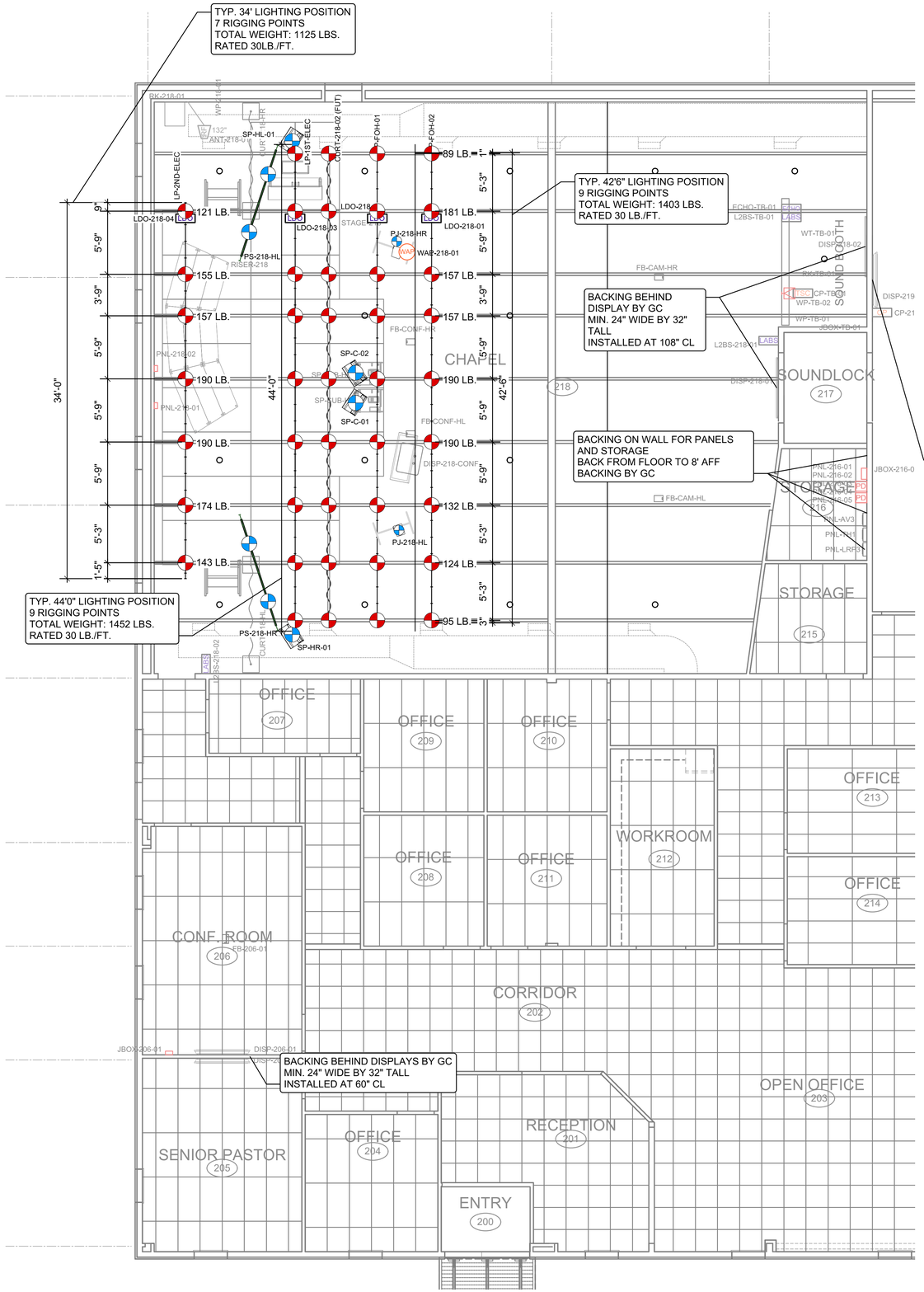

1 Chapel & Office Rigging Plan
Scale: 3/16" = 1'

Device	Weight (lbs.)	Description	# of Rigging Points	Max. Weight (per point)	Design Factor	Required Rigging Rating (per point)	End User lbs/foot	End User Maximum Point Load	Maximum End User Weight
Audio									
SP-C-01	55	Main Loudspeaker	1	55	8:1	440			
SP-C-02	55	Main Loudspeaker	1	55	8:1	440			
SP-HL-01	55	Main Loudspeaker	1	55	8:1	440			
SP-HR-01	55	Main Loudspeaker	1	55	8:1	440			
SP-111-01-04	20	Pendant Speaker	1	20	8:1	160			
Video									
PJ-110-HL	50	Projector	1	50	8:1	400			
PJ-110-HR	50	Projector	1	50	8:1	400			
PS-110-HL	50	Projection Screen	2	25	8:1	200			
PS-110-HR	50	Projection Screen	2	25	8:1	200			
Lighting/Scenic									
LP-FOH-01	1403	Lighting Position	9	190	8:1	1520	30	173 every 3'	1275
LP-FOH-02	1403	Lighting Position	9	190	8:1	1520	30	173 every 3'	1275
CURT-118-02	1403	Valence Curtain	9	190	8:1	1520	30	173 every 3'	1275
LP-1ST-ELEC	1452	Lighting Position	9	190	8:1	1520	30	173 every 3'	1320
LP-2ND-ELEC	1125	Lighting Position	7	190	8:1	1520	30	173 every 3'	1020
HOUSE LIGHT	30	Lighting Position	1	30	8:1	240			

NOTE: Numbers next to rigging point on drawing correspons to numbers in parenthesis on chart.
Reference AVL 1.2 for equipment heights.
Label lighting positions with maximum point loads and maximum end user weights.

2 AVL Rigging Table

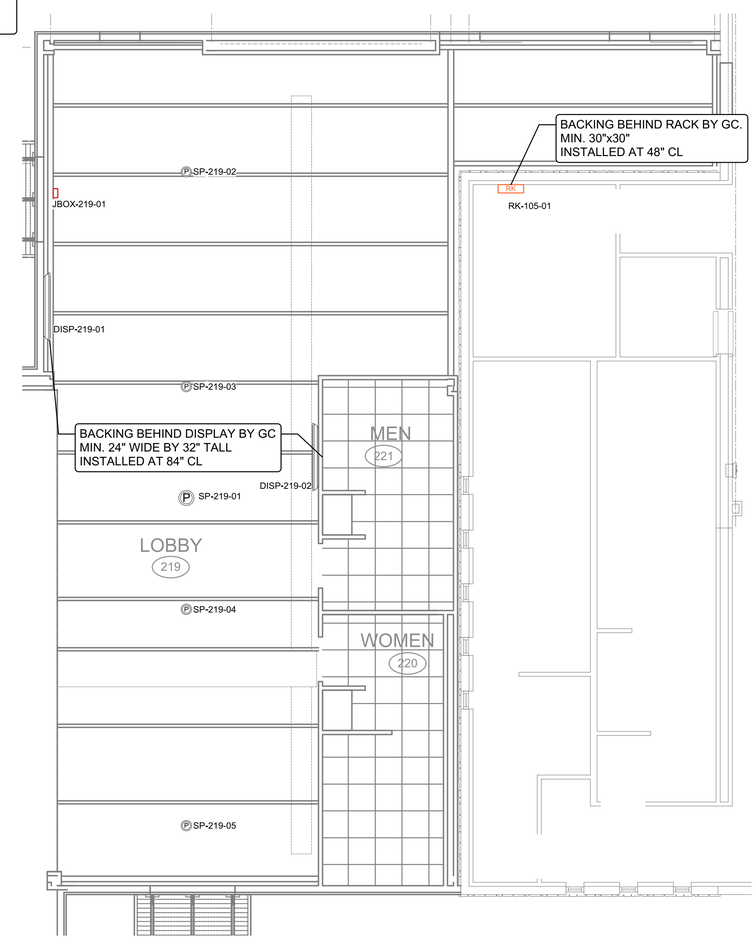

3 Lobby AVL Rigging Plan
Scale: 3/16" = 1'

FOR CONSTRUCTION

Stark Raving Solutions
10413 W 84th Terrace | Lenexa, KS 66214
866-275-3261 | 913-383-0243
www.starkravingsolutions.com

FOR REFERENCE ONLY
REFER TO ALL ARCHITECTURAL AND MEP ENGINEERING DRAWINGS FOR CONSTRUCTION DETAILS

NOTICE: ANY REFERENCES TO STRUCTURAL OR ELECTRICAL INFORMATION ARE FOR REFERENCE ONLY; STARK RAVING SOLUTIONS IS NOT LICENSED FOR AND DOES NOT PERFORM STRUCTURAL OR ELECTRICAL ENGINEERING. NO ANALYSIS HAS BEEN MADE BY STARK RAVING SOLUTIONS CONCERNING EITHER AREA. THE SEAL OF A REGISTERED PROFESSIONAL ENGINEER WILL APPEAR ON THESE DRAWINGS IF THEY HAVE BEEN REVIEWED AND APPROVED BY A LICENSED ENGINEER.

100% CD

PHASE II ADDITION TO:
THE SUMMIT
3381 NW CHIPMAN ROAD
LEE'S SUMMIT, MO 64081

PROJECT #: 15-678
ISSUE DATE: 02/05/2020
DRAWN BY: KG, EH
CHECKED BY: JJ

REVISIONS:
1.
2.
3.
4.
5.

SHEET No.
AVL 1.25
Rigging and Backing

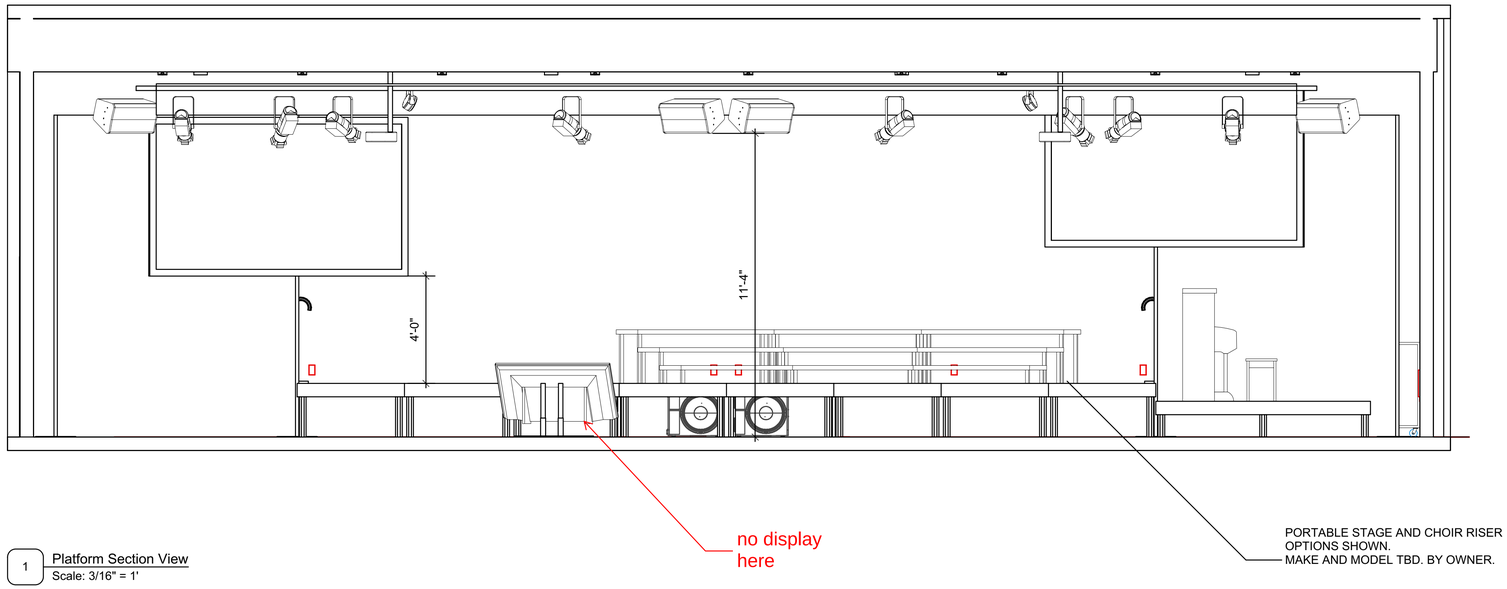

1 Platform Section View
Scale: 3/16" = 1'

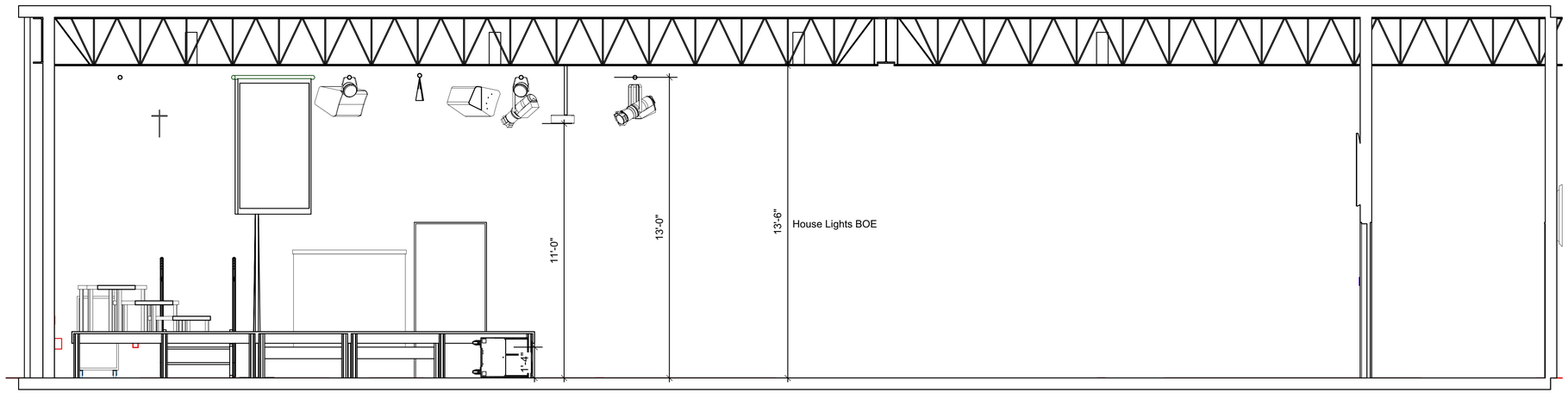

2 Chapel CL Section
Scale: 3/16" = 1'

FOR CONSTRUCTION

Stark Raving Solutions
10413 W 84th Terrace | Lenexa, KS 66214
866-275-3261 | 913-383-0243
www.starkravingsolutions.com

FOR REFERENCE ONLY
REFER TO ALL ARCHITECTURAL AND MEP ENGINEERING DRAWINGS FOR CONSTRUCTION DETAILS

NOTICE: ANY REFERENCES TO STRUCTURAL OR ELECTRICAL INFORMATION ARE FOR REFERENCE ONLY; STARK RAVING SOLUTIONS IS NOT LICENSED FOR AND DOES NOT PERFORM STRUCTURAL OR ELECTRICAL ENGINEERING. NO ANALYSIS HAS BEEN MADE BY STARK RAVING SOLUTIONS CONCERNING EITHER AREA. THE SEAL OF A REGISTERED PROFESSIONAL ENGINEER WILL APPEAR ON THESE DRAWINGS IF THEY HAVE BEEN REVIEWED AND APPROVED BY A LICENSED ENGINEER.

100% CD

PHASE II ADDITION TO:
THE SUMMIT
3381 NW CHIPMAN ROAD
LEE'S SUMMIT, MO 64081

PROJECT #: 15-678
ISSUE DATE: 02/05/2020
DRAWN BY: KG, EH
CHECKED BY: JJ

REVISIONS:
1.
2.
3.
4.
5.

SHEET No.
AVL 1.26
Sections and AVL Details

Proper audio and video system design requires an isolated ground clean power system which is transformer isolated from the main building electrical system and theatrical systems (TH). The purpose of the AV power system is to create a clean neutral and single point grounding to avoid noise and interference in audio and video signals.

1. All audio and video circuits shall be supplied from the same dedicated electrical panel(s). These panels shall derive their power and isolated neutral from the existing AV power panel which is fed from a K-13 or greater rated isolation transformer. This system shall be known as AV power. All AV power panels must be fed from the same main distribution panel board / switch board and transformer.
2. The AV power panelboard (with isolated ground buss) to be installed by electrical contractor. Electrical engineer to verify capacity and space on existing AV power system and specify distribution as required.
3. The AV power system shall have an isolated technical ground system, isolated from the building safety ground system completely except for the connection at the isolation transformer(s). The isolated ground system must be configured in a star arrangement from this main distribution point, with each of the isolated grounds for the panels or isolation transformers only connected to the building ground at the main distribution panel (all at the same point.)
4. AV panelboard ground feeder conductor should be sized one trade size larger than the size of current carrying (hot leg) conductors.
5. The neutral feeder conductor shall have an ampacity of at least 130% of the largest ungrounded circuit conductors feeding the panel. 200% neutrals may be required by some codes due to the large non-linear loads presented by the audio video systems.
6. The AV power panel(s) shall not furnish power to any other equipment. Power for the lighting system, HVAC, kitchen / coffee areas and other equipment should be kept as separate as possible from the AV Power System.
7. In addition to circuits dedicated to AV equipment, convenience outlets (non-AVL circuits) should be provided close to the AV power outlets. These circuits provide convenience' power for ancillary lights and any temporary equipment that may be used in the space but not as part of the AV systems. These outlets may be part of the standard power package for the space and are not explicitly called out on the AV electrical drawings or schedules.
8. All AV system power receptacles shall be as follows unless otherwise specified in the AVL drawings.

Receptacles to be TR (Tamper Resistant) in public areas and where required by code.
- o Receptacles to be WR (weather resistant) where located in floor boxes and where required by code.
- o All IG receptacles to be ORANGE other colors are available for visual critical areas with SRS approval only.
- o Receptacles to be TR (Tamper Resistant) in public areas and where required by code.
- o Receptacles to be WR (weather resistant) where located in floor boxes and where required by code.
- o 20 amp duplex receptacles shall be Hubbell IG5352, IG5362 or approved equal.
- o 30 amp 125V L5-30 twist lock receptacles shall be Hubbell IG2610, Bryant 70530IG or approved equal.
- o 30 amp 250V L6-30 twist lock receptacles shall be Hubbell IG2620, Bryant 71430IG or approved equal.
- o 20 amp 250V L6-30 twist lock receptacles shall be Hubbell IG2320, Bryant 70620IG or approved equal.
- o 30 amp 120/208v L21-30 twist lock receptacles shall be Hubbell IG2810, Bryant 72220IG or approved equal

9. All AV power branch circuits shall have a dedicated ground and neutral wire per circuit. Neutral and hot (non-grounded) conductor to be equal in size and sized per code. Shared neutrals are not allowed within the AV power system. Conductors should be sized appropriate for cable distance at full amperage of circuit with maximum of 3% voltage drop at full load.
10. Duplex receptacles will have an insulated ground conductor connected to the isolated ground buss bar that is in the AV power panelboard per NEC 250.146(D). Isolated ground wire to be equal in size to the current carrying conductors. This conductor shall be green with yellow strip to differentiate it from the safety grounding conductors.
11. All receptacles shall be labeled on the faceplate with the source (Panel board / Breaker #(s)) that the circuit is fed from. If circuit is not terminated at a receptacle, all three of these wires are to be labeled in the junction box at the equipment location with circuit designator and the junction box should be labeled with all circuits terminating in this box.
12. EC to provide conduits, couplings, hangers, supports, boxes, cable, devices, labor and miscellaneous items required to complete work as described on the AVL Drawings.
13. EC to coordinate all work with the AVL systems contractor.

1 AV Power Requirements

1.TH power for the AVL systems may include, but is not limited to, power for dimmer racks, pack and bars, power for control circuitry, dimmer circuits, constant and relay controlled theatrical lighting circuits, motor and hoist circuits and power for special effects.
2. Relay panels, dimmer racks & lighting control system (house & theatrical lights in worship) shall be supplied by SRS, installed by EC.
3. TH power panel(s), feeders, circuits and receptacles to be supplied, installed and terminated by the electrical contractor (EC) with the exception of devices supplied by SRS as specified in the AVL drawings. All power terminations to be done by the EC.
4. TH system neutral panel feeder conductors shall be sized at least one trade size larger than size of protected (hot) current carrying panel feeder conductors. The neutral conductor shall have an ampacity of at least 130% of the largest ungrounded circuit conductors feeding the panel. 200% neutrals may be required by some codes due to the large non-linear loads presented by the theatrical dimming systems.
5. TH power circuits for the AVL systems shall not furnish power to any other equipment (dedicated circuits).
6. All TH AVL power branch circuits shall have a dedicated neutral wire per circuit. Neutral, ground and hot (non-grounded) conductor to be equal in size. Shared neutrals are not allowed within any AVL power systems.
7. All receptacles shall be labeled with the source (panel board / breaker #(s) or dimmer #) that the circuit is fed from. If circuit is not terminated at a receptacle, all three of these wires are to be labeled at the junction box at the equipment location with circuit designator.
8. All TH system receptacles shall be as follows unless otherwise specified in the AVL Drawings:
   - a. Receptacles to be TR (Tamper Resistant) in public areas and where required by code.
   - b. Receptacles to be WR (weather resistant) where located in floor boxes and where required by code.
   - c. Receptacles to be BLACK unless otherwise specified in AVL Drawings
   - d. 20 amp 120V duplex receptacles shall be Hubbell 5352A, 5362 or approved equivalent.

2 TH Power Requirements

Empty Conduit Requirements and Installation Details

1. Empty LV conduit and box requirements specified by SRS, provided by electrical contractor. SRS to provide AVL system wire and cable.
2. There are minimum conduit separations that must be maintained between conduits carrying wire of different groups. It is important to note that while different signals may exist on a wall panel, it is not appropriate to run more than one group in a conduit. Refer to **table 2.0.3** for all minimum conduit separation distances.
3. All under slab conduit must be RIGID GALVANIZED STEEL CONDUIT (RGS) or INTERMEDIATE METAL CONDUIT (IMC) as allowed by code (not PVC), protected from moisture (wrapped, coated or embedded in slab above vapor barrier), connections or threads coated with a waterproof seal, and isolated from concrete and soil per code and local requirements. All other AVL conduits must be EMT**.**

The use of PVC conduit for AVL is prohibited.

4. SRS recommends minimizing the number of under-slab conduits or creating mechanical troughs or sleeves in slab where EMT may be used. PVC coated metal conduit should allow for mechanical bonding of metal between sections. Shielded fiber duct may be used where allowed by code.
5. It will be necessary at times for line voltage conduits carrying high currents (feeders) to cross low voltage AVL conduits in close proximity. The conduit paths must be designed to cross at 90° to each other.
6. In a situation where there will exist a heavy current demand in adjacent conduits, or where there will be long parallel runs, there will need to be additional separation between those conduits and the sound, communication and video conduits. (example: under slab)
7. Maximum turns in conduits to be **no more than 180°** or **runs greater than 100'** without the addition of intermediate pull boxes, junction boxes, or conduit access ports. EC to plan runs and place boxes as needed.
8. Conduit runs of similar groups may be combined and the single conduit upsized appropriately to minimize the number of conduits following the same path. Different groups may not be combined. Upsized conduit internal cross-section area must be equal to or greater than the area of all the combined conduits.
9. Each conduit run shall have a pull string / pull line left in the conduit and tied off at each end.
10. Both ends of all conduits and all pull boxes must be accessible for installing cables and any future cable pulls.
11. All electrical conduits, junction boxes, covers, brackets, hardware and other exposed parts shall be painted to match the finish ceiling or wall or the finish shall be coordinated with interior decor.
12. Signal conduits should be mechanically and electrically connected to the back boxes. These conduits and boxes should connect to the building safety grounding system.
13. Conduits have been sized for 40% or less fill per code. Required conduit size and quantities are shown on the AVL electrical floor plans and listed in the conduit table.
14. Minimum conduit size for AVL systems is ¾".
15. Where conduits for the electrical, sound, communication and video systems enter equipment racks, use non-conductive (PVC) conduit fittings to isolate the conduit from the rack; allowed per NEC 250.96(B) and 640.23(B), that will isolate the conduit system from the chassis of the rack or use of flexible service cord (SO cord) or flexible non-metallic conduit to isolate equipment rack from building ground.
16. The sound system isolated technical ground must be bonded to the metal frame of all equipment racks and to the un-insulated ground buss bar or grounding lug mounted in each rack by EC. Where more than one rack exists together, all racks grounding lugs will be bonded to one central equipment rack lug. This central equipment rack grounding lug will be the only connection to the sound system technical ground conductor. The ganging of racks together with mechanical fasteners in not an acceptable method of bonding the sound system technical grounds between racks.
17. The rack frames will be electrically insulated from the floor, structural metal, concrete and so located to prevent coming into contact with any safety grounded items during operation. SRS will test rack isolation and responsible installation party (as defined by **AVL 1.0.4**) will be required to bring into compliance any racks that fail the isolation test.
18. Where conduits terminate without a box or device (such as stub-out and wire trays), fiber rings or wire protection shall be provided by the EC on the conduit ends to protect wires during pull and after installation.
19. EC to clearly label all junction boxes with a permanent marker per designator in AVL drawing electrical schedules. Label all conduits at junction boxes and stub outs with conduit designator.
20. All AVL systems wiring must be in conduit unless specifically approved by SRS. Ring and string and stub-outs only apply to specifically noted applications.

3 AVL Empty Conduit Requirements

Minimum Conduit Separation Distances
This section defines the different levels and types of audio and video signals that will be a part of the complete sound, communication and video system. It is important that each group be installed in conduit discreet from other group levels. Common junction boxes / wire raceways that combine different cable groups shall not be used. Any wire that is classified within a group can be combined in a conduit carrying other wiring that is in the same group. When a combination panel is specified, the conduits will enter into the box with the *intent* of maintaining the separation as much as possible. In bringing the conduits into the box, the metal walls of the box will supply some additional shielding. The different levels of audio and video signals are defined as follows:

GROUP M - Microphone and other sensitive wiring (0 to 100 mVAC).

GROUP D Digital communication wiring: computer networks (Cat5e/Cat6), digital audio (AES, MADI, networked) and video (SDI, HD-BaseT, DVI-D, HDMI, networked) signals. (1V to 10 VAC typical). Audio line level analog wiring, analog video signals (composite, component, VGA), Tie Lines (100 mVAC to 10 VAC). Control signals, intercom (Lyntec, relay control, key switches Typically 10-24 VAC). Lighting data DMX and lighting network (1 VAC to 10 VAC typical).

GROUP S - Loud speaker (10 Volts to 70 Volts typical). Lighting architectural data (1 VAC to 20 VAC, and 12VDC typical).

Group M/D/S conduit separation for other Group M/D/S conduits **shall apply on any parallel runs longer than 20'**. Group M/D/S conduit separation from other sources shall be maintained as possible. In larger installations with longer wire paths it may be necessary to further define and separate signal types within the Group M/D/S designations.

	Group M	Group D	Group S
Group M (in EMT)	ADJACENT	1'0"	1'0"
Group D (in EMT)	1'0"	ADJACENT	1'0"
Group S (in EMT)	12'0"	1'0"	ADJACENT
120/208 branch circuits (under 60A, in EMT)	2'0"	1'0"	1'0"
120/208 branch circuits (under 60A, in PVC)	6'0"	4'0"	4'0"
Dimmer controlled lighting	2'0"	1'0"	6"
SRC controlled devices	3'0"	1'0"	1'0"
220/480V feeders (in EMT) 200A or less	6'0"	6'0"	6'0"
220/480V feeders (in rigid) 400A or less	6'0"	4'0"	4'0"
220/480V feeders (in PVC)	16'4"	12'0"	12'0"
Transformers and panelboards	16'4"	12'0"	12'0"
All others (plumbing, heating, etc.)	1'0"	1'0"	1'0"

4 AVL Conduit Minimum Separation

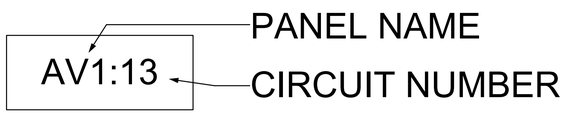

Note: Text to be at least 1/4" tall. Black text on white label.

5 Typical Label for Power Outlet

FOR CONSTRUCTION

Stark Raving Solutions
10413 W 84th Terrace | Lenexa, KS 66214
866-275-3261 | 913-383-0243
www.starkravingsolutions.com

FOR REFERENCE ONLY
REFER TO ALL ARCHITECTURAL AND MEP ENGINEERING DRAWINGS FOR CONSTRUCTION DETAILS

NOTICE: ANY REFERENCES TO STRUCTURAL OR ELECTRICAL INFORMATION ARE FOR REFERENCE ONLY; STARK RAVING SOLUTIONS IS NOT LICENSED FOR AND DOES NOT PERFORM STRUCTURAL OR ELECTRICAL ENGINEERING. NO ANALYSIS HAS BEEN MADE BY STARK RAVING SOLUTIONS CONCERNING EITHER AREA. THE SEAL OF A REGISTERED PROFESSIONAL ENGINEER WILL APPEAR ON THESE DRAWINGS IF THEY HAVE BEEN REVIEWED AND APPROVED BY A LICENSED ENGINEER.

100% CD

PHASE II ADDITION TO:
THE SUMMIT
3381 NW CHIPMAN ROAD
LEE'S SUMMIT, MO 64081

PROJECT #: 15-678
ISSUE DATE: 02/05/2020
DRAWN BY: KG, EH
CHECKED BY: JJ

REVISIONS:
1.
2.
3.
4.
5.

SHEET No.

AVL 2.0
Electrical Requirements

Signal Type	#	Trade Size	Source	Destination	In Slab?
D	1	1 1/4"	WP-218-01	FB-CONF-HR	Y
D	2	1"	FB-CONF-HR	FB-CONF-HL	Y
D	3	1 1/4"	JBOX-TB-01	JBOX-206-01	N
D	4	3/4"	JBOX-216-01	L2BS-218-02	N
D	5	1"	JBOX-TB-01	PNL-LRP3	N
D	6	3/4"	JBOX-TB-01	L2BS-218-01	N
D	7	1"	S.O. RK-105-01	DISP-219-02	N
D	8	1"	JBOX-TB-01	DISP-219-03	N
D	9	3/4"	JBOX-TB-01	CP-219-01	N
D	10	1"	S.O. RK-105-01	DISP-219-01	N
D	11	2"	WP-218-01	JBOX-TB-01	Y
D	12	2"	WP-218-01	JBOX-TB-01	Y
D	13	1 1/4"	WP-218-01	S.O. PJ-218-HR	N
D	14	1"	S.O. PJ-218-HR	S.O. PJ-218-HL	N
D	15	2"	JBOX-TB-01	JBOX-219-01	N
D	16	3/4"	WP-218-01	LDO-218-01	N
D	17	3/4"	LDO-218-01	LDO-218-02	N
D	18	3/4"	WP-218-01	LDO-218-03	N
D	19	3/4"	LDO-218-03	LDO-218-04	N
D	20	1 1/4"	WP-218-01	ANT-218-01	N
D	21	2"	JBOX-219-01	S.O. RK-105-01	N
D	22	2"	S.O. RK-105-01	JB-114	N
D	23	3/4"	WP-218-01	PNL-218-02	Y
D	24	3/4"	WP-218-01	PNL-218-01	Y
D	25	3/4"	WP-218-01	S.O. House Lights	N
D	26	3/4"	WT-TB-01	WP-TB-02	N
D	27	3/4"	WT-TB-01	L2BS-TB-01	N
D	29	1"	JBOX-TB-01	DISP-218-02	N
D	30	3/4"	JBOX-TB-01	JBOX-216-01	N
D	31	1"	JBOX-TB-01	DISP-218-01	N
D	32	1"	JBOX-TB-01	FB-CAM-HL	Y
D	33	1"	JBOX-TB-01	FB-CAM-HR	Y
D	34	2"	JBOX-TB-01	WP-TB-01	N
D	35	2"	JBOX-TB-01	WP-TB-01	N
D	36	1"	JBOX-206-01	DISP-206-01	N
D	37	1"	JBOX-206-01	DISP-205-01	N
D	38	1"	DISP-206-01	FB-206-01	Y
M	1	1 1/2"	WP-218-01	JBOX-TB-01	Y
M	2	2"	JBOX-TB-01	WP-TB-01	N
S	1	1 1/2"	WP-218-01	JBOX-TB-01	Y
S	2	1"	WP-218-01	S.O SP-HR-01	N
S	3	3/4"	JBOX-TB-01	SP-219-05	N
S	4	3/4"	SP-219-04	SP-219-05	N
S	5	3/4"	SP-219-03	SP-219-04	N
S	6	3/4"	SP-219-03	SP-219-01	N
S	7	3/4"	SP-219-02	SP-219-03	N
S	8	3/4"	CP-219-01	SP-219-01	N
S	9	1"	S.O. SP-HR-01	S.O SP-C-01	N
S	10	1"	S.O. SP-C-01	S.O SP-HL-01	N

D39 & D40,
1"
JBOX 206-01
WP 206-01
WP-205-01

1 AVL Empty Conduit Schedule

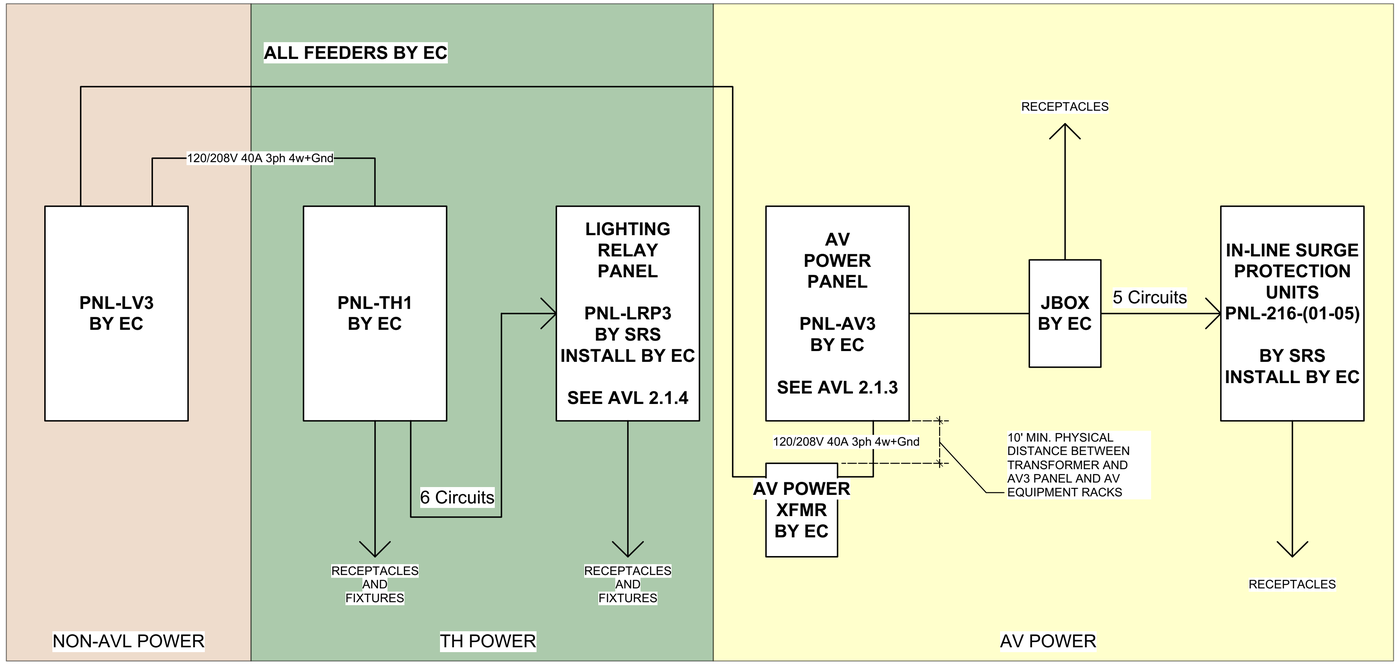

2 Electrical Riser Diagram

Panel Type / Model: Panel by EC

FEEDER BUS AMPS: See E. Sheets
MAIN SIZE / TYPE: See E. Sheets
VOLTS / PHASE: See E. Sheets
REQUIRED X-FRMER: Yes, See E. Sheets

MOUNTING: SURFACE
LOCATION: Storage 113
SEQUENCING: N/A
SIDECAR: N/A

CKT #	Surge	Circuit Description	VA / PHASE A	VA / PHASE B	VA / PHASE C	BRK AMP	BRK TYPE	P	P	BRK TYPE	BRK AMP	VA / PHASE A	VA / PHASE B	VA / PHASE C	Circuit Description	Surge	CKT #
1		Tech Booth - Video	400			20	NMB	1	1	NMB	20	360			Tech Booth - Audio	1	2
3		Tech Booth - Above Counter		540		20	NMB	1	1	NMB	20		180		RK-109-01 Wall Recept.	2	4
5		RK-109-01 Wall Recept.			540	20	NMB	1	1	NMB	20			1680	RK-109-01 Wall Recept.		6
7		RK-109-01 Wall Recept.	720			20	NMB	1	1	NMB	20	720			Platform 109 Wall Recept.		8
9		Platform 109 Wall Recept.		720		20	NMB	1	1	NMB	20		360		Confidence Floor Pockets		10
11	3	HL/HR Projectors			1500	20	NMB	1	1	NMB	20			360	Confidence Wall Display		12
13		Foyer Displays	540			20	NMB	1	1	NMB	20	180			RK-105-01		14
15	4	Lyntec XRM20 Module		720		20	NMB	1	1	NMB	20		720		Lyntec XRM20 Module	5	16
17		Storage Courtesy Outlet			180	20	NMB	1	1	NMB	20			360	Camera Floor Boxes		18
19		Conference and Pastor Rooms	720			20	NMB	1	1	NMB	20	0			SPARE/FUTURE		20
21		SPARE/FUTURE		0		20	NMB	1	1	NMB	20		0		SPARE/FUTURE		22
		Subtotal Load	2380	1980	2220							1260	1260	2400	Subtotal Load		

NOTES:

NMB = Non Motorized Breaker
MB = Motorized Breaker
All breakers to be high magnetic type

Totals	VA	AMPS
PHASE A	3640	30.33
PHASE B	3240	27.00
PHASE C	4620	38.50
TOTAL	11500	

3 PNL-AV3 Circuit Table

Panel Type / Model: Generic Panel by EC

FEEDER BUS AMPS:
MAIN SIZE / TYPE:
VOLTS / PHASE:
SUB PANEL FROM:

MOUNTING: Surface
LOCATION: Storage 113
SEQUENCING: LRP-3
SIDECAR: N/A

CKT #	Relay (LRP-3)	Circuit Description	VA / PHASE A	VA / PHASE B	VA / PHASE C	BRK AMP	MOD TYPE	P	P	MOD TYPE	BRK AMP	VA / PHASE A	VA / PHASE B	VA / PHASE C	Circuit Description	Relay (LRP-3)	CKT #
1		Chapel House Lights	1080			20		1	1		20	1080			Chapel House Lights		2
3	1	LP-FOH-01		1080		20		1	1		20		1080		LP-FOH-02	2	4
5	3	LP-1ST-ELEC			1080	20		1	1		20			1080	LP-2ND-ELEC	4	6
7	5	LP-1ST/2ND-ELEC	540			20		1	1		20	1080			Platform Wall Recept.	6	8
9		Tech Booth		360		20		1	1		20		360		RK-109-01		10
11		JBOX-116-01, Storage Courtesy			360	20		1	1		20			0	SPARE/FUTURE		12
13		LRP-3 Power	180			20		1	1		20	0			SPARE/FUTURE		14
15		SPARE/FUTURE		0		20		1	1		20		0		SPARE/FUTURE		16
		Subtotal Load	1800	1440	1440							2160	1440	1080	Subtotal Load		

NOTES:

R20 = Relay module
D20 = Dimmer module
All breakers to be high magnetic type

Totals	VA	AMPS
PHASE A	3960	33.00
PHASE B	2880	24.00
PHASE C	2520	21.00
TOTAL	9360	

4 PNL-TH1 Circuit Table

FOR CONSTRUCTION

Stark Raving Solutions
10413 W 84th Terrace | Lenexa, KS 66214
866-275-3261 | 913-383-0243
www.starkravingsolutions.com

FOR REFERENCE ONLY
REFER TO ALL ARCHITECTURAL AND MEP ENGINEERING DRAWINGS FOR CONSTRUCTION DETAILS

NOTICE: ANY REFERENCES TO STRUCTURAL OR ELECTRICAL INFORMATION ARE FOR REFERENCE ONLY; STARK RAVING SOLUTIONS IS NOT LICENSED FOR AND DOES NOT PERFORM STRUCTURAL OR ELECTRICAL ENGINEERING. NO ANALYSIS HAS BEEN MADE BY STARK RAVING SOLUTIONS CONCERNING EITHER AREA. THE SEAL OF A REGISTERED PROFESSIONAL ENGINEER WILL APPEAR ON THESE DRAWINGS IF THEY HAVE BEEN REVIEWED AND APPROVED BY A LICENSED ENGINEER.

100% CD

PHASE II ADDITION TO:
THE SUMMIT
3381 NW CHIPMAN ROAD
LEE'S SUMMIT, MO 64081

PROJECT #: 15-678
ISSUE DATE: 02/05/2020
DRAWN BY: KG, EH
CHECKED BY: JJ

REVISIONS:
1.
2.
3.
4.
5.

SHEET No.

AVL 2.1
Electrical Schedules

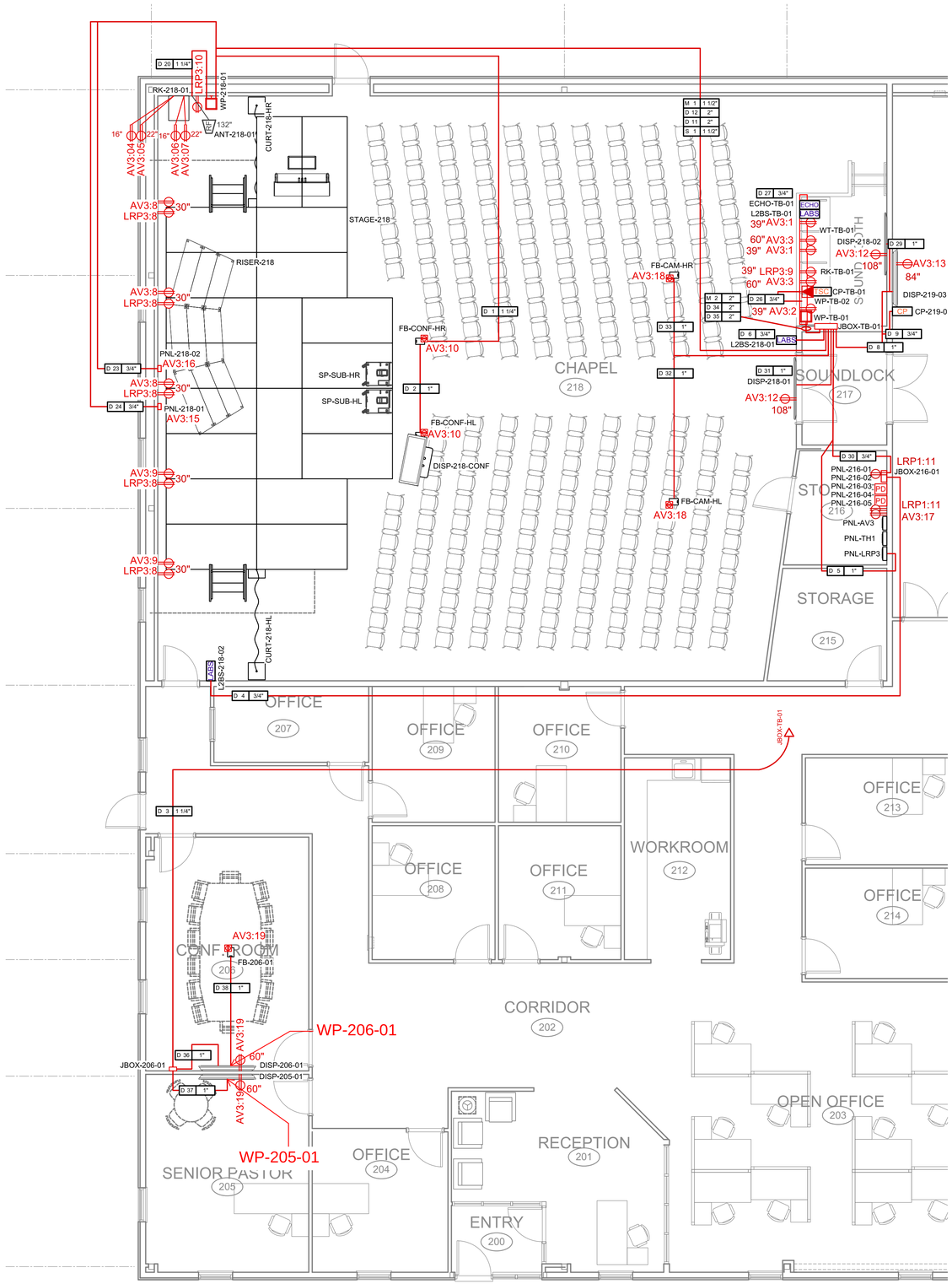

1 Chapel & Office AVL Electrical Plan
Scale: 3/16" = 1'

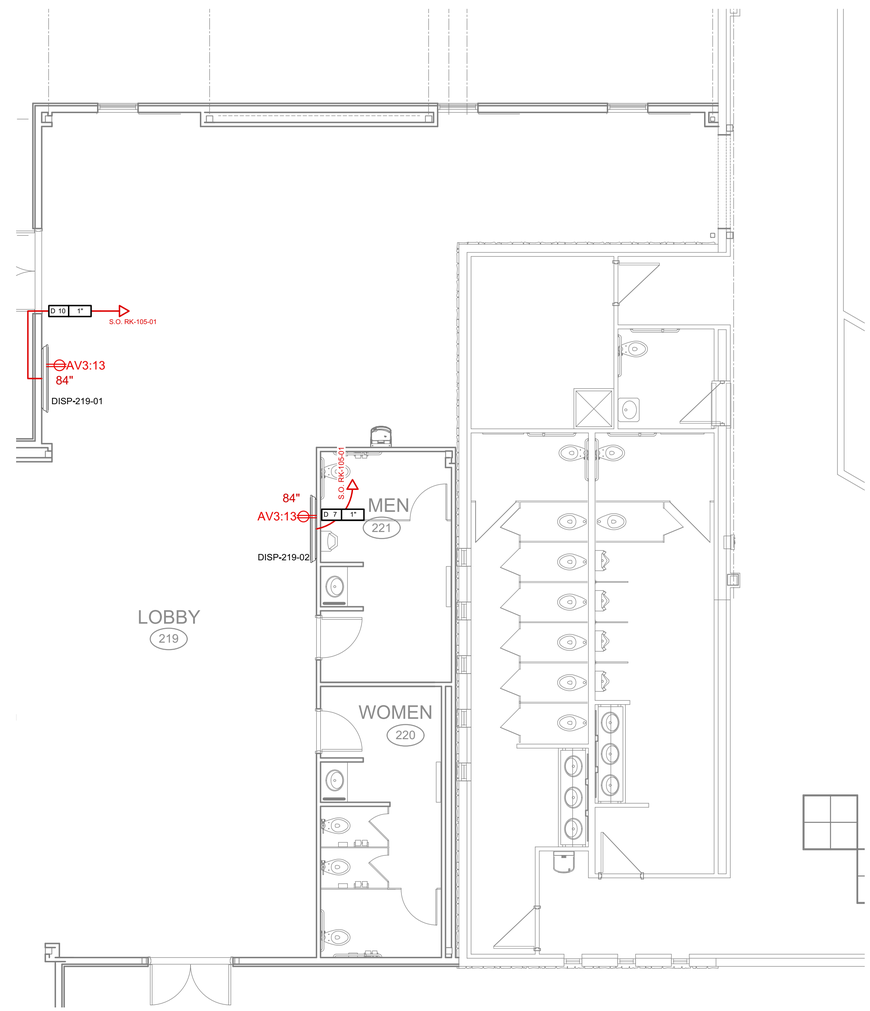

2 Lobby AVL Electrical Plan
Scale: 3/16" = 1'

FOR CONSTRUCTION

Stark Raving Solutions
10413 W 84th Terrace | Lenexa, KS 66214
866-275-3261 | 913-383-0243
www.starkravingsolutions.com

FOR REFERENCE ONLY
REFER TO ALL ARCHITECTURAL AND MEP ENGINEERING DRAWINGS FOR CONSTRUCTION DETAILS

NOTICE: ANY REFERENCES TO STRUCTURAL OR ELECTRICAL INFORMATION ARE FOR REFERENCE ONLY; STARK RAVING SOLUTIONS IS NOT LICENSED FOR AND DOES NOT PERFORM STRUCTURAL OR ELECTRICAL ENGINEERING. NO ANALYSIS HAS BEEN MADE BY STARK RAVING SOLUTIONS CONCERNING EITHER AREA. THE SEAL OF A REGISTERED PROFESSIONAL ENGINEER WILL APPEAR ON THESE DRAWINGS IF THEY HAVE BEEN REVIEWED AND APPROVED BY A LICENSED ENGINEER.

100% CD

PHASE II ADDITION TO:
THE SUMMIT
3381 NW CHIPMAN ROAD
LEE'S SUMMIT, MO 64081

PROJECT #: 15-678
ISSUE DATE: 02/05/2020
DRAWN BY: KG, EH
CHECKED BY: JJ

REVISIONS:
1.
2.
3.
4.
5.

SHEET No.
AVL 2.21
AVL Electrical Floor Plan

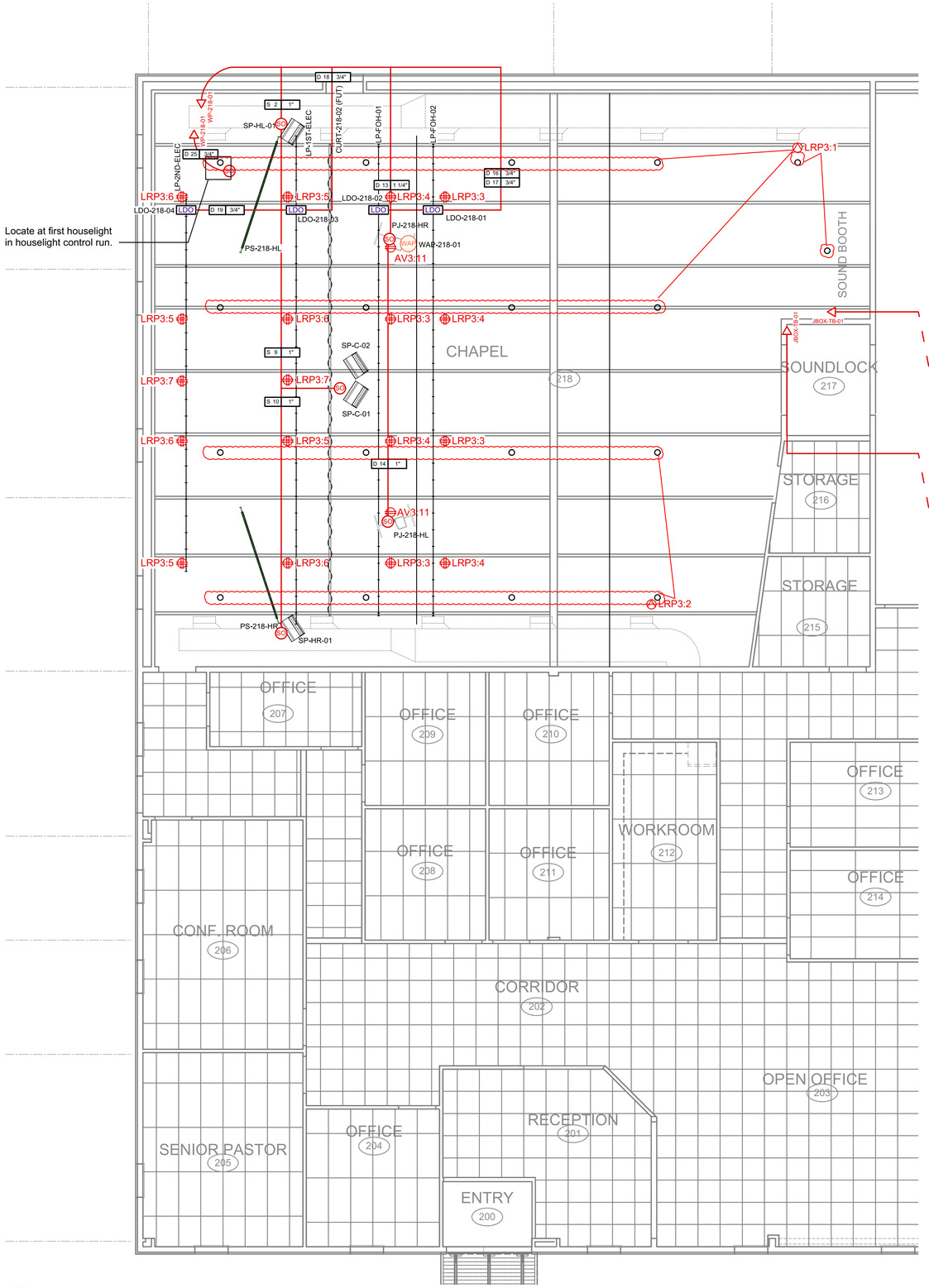

1 Chapel & Office AVL Electrical Plan
Scale: 3/16" = 1'

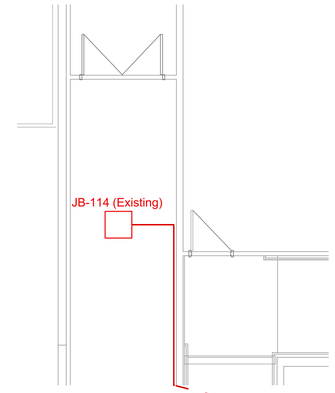

3 Existing Hallway
Scale: 3/16" = 1'-0"

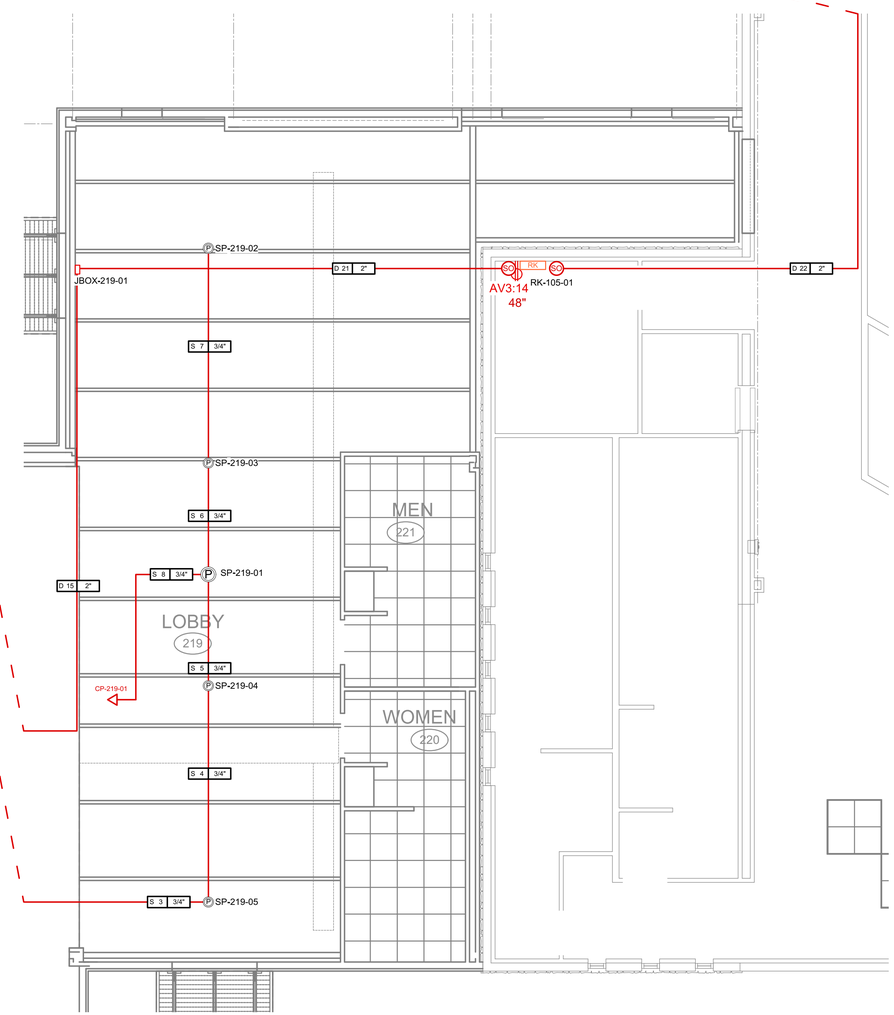

2 Lobby AVL Electrical Plan
Scale: 3/16" = 1'

FOR CONSTRUCTION

Stark Raving Solutions
10413 W 84th Terrace | Lenexa, KS 66214
866-275-3261 | 913-383-0243
www.starkravingsolutions.com

FOR REFERENCE ONLY
REFER TO ALL ARCHITECTURAL AND MEP ENGINEERING DRAWINGS FOR CONSTRUCTION DETAILS

NOTICE: ANY REFERENCES TO STRUCTURAL OR ELECTRICAL INFORMATION ARE FOR REFERENCE ONLY; STARK RAVING SOLUTIONS IS NOT LICENSED FOR AND DOES NOT PERFORM STRUCTURAL OR ELECTRICAL ENGINEERING. NO ANALYSIS HAS BEEN MADE BY STARK RAVING SOLUTIONS CONCERNING EITHER AREA. THE SEAL OF A REGISTERED PROFESSIONAL ENGINEER WILL APPEAR ON THESE DRAWINGS IF THEY HAVE BEEN REVIEWED AND APPROVED BY A LICENSED ENGINEER.

100% CD

PHASE II ADDITION TO:
THE SUMMIT
3381 NW CHIPMAN ROAD
LEE'S SUMMIT, MO 64081

PROJECT #: 15-678
ISSUE DATE: 02/05/2020
DRAWN BY: KG, EH
CHECKED BY: JJ

REVISIONS:
1.
2.
3.
4.
5.

SHEET No.
AVL 2.22
AVL Electrical Ceiling Plan

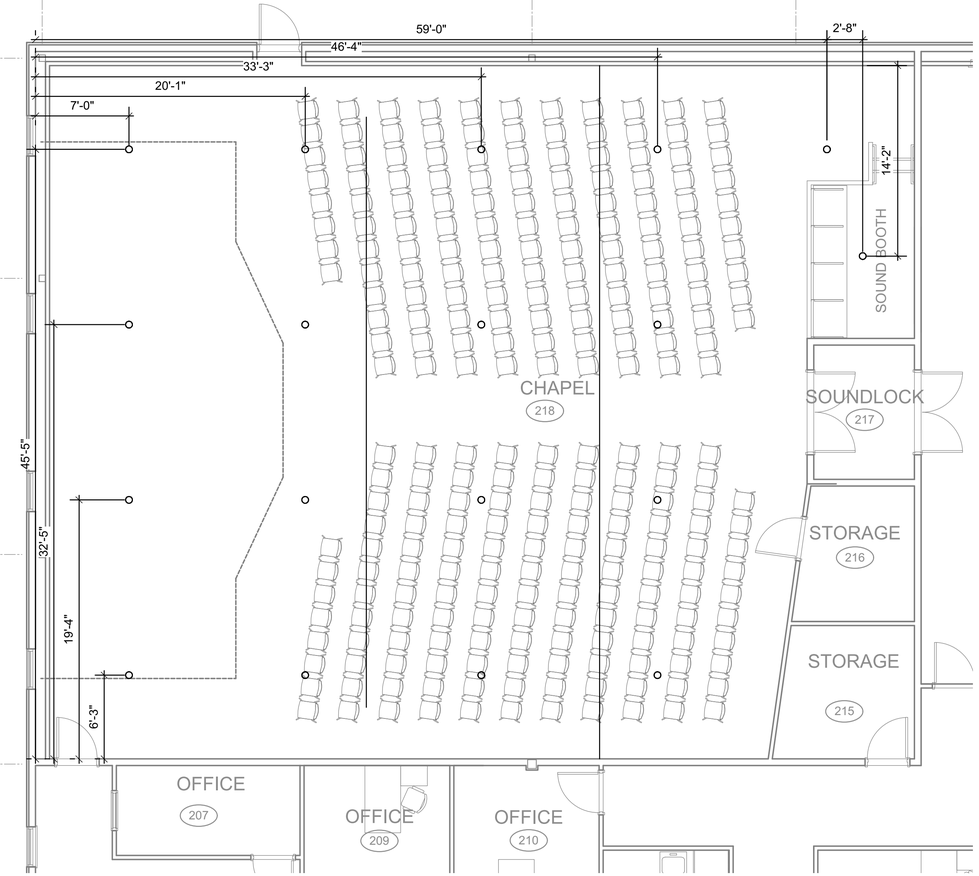

○ = The Light Source Mini-Pendant 80W, 81 Degree, 13'-6" BOE

1 Chapel House Light Plan
Scale: 1/4" = 1'

Room #	Room Name	Purpose	Fixture Type (AVL 2.23.3)	Fixture Requirements by	Fixture Specified by	Fixture Provided By	Fixture Installed By	Line Voltage Wire Provided by	Line Voltage Wiring Installed By	LV Control Wiring Provided By	LV Control Wiring Installed By	Fixture Programming / Address By	PNL	Control Type	Control By
118	Chapel	House	A	SRS	SRS	EC	EC	EC	EC	EC	EC	SRS	LRP3	DMX	SRS
118	Chapel	Theatrical	B	SRS	SRS	SRS	SRS	EC	EC	SRS	SRS	SRS via RDM	LRP3	DMX/Relay	SRS
118	Chapel	Emergency		Architect/EE											
117	Soundlock	House		EC	EC	EC	EC	EC	EC	EC	EC	EC	EC		EC
116	Storage	House		EC	EC	EC	EC	EC	EC	EC	EC	EC	EC		EC
119	Lobby	House		EC	EC	EC	EC	EC	EC	EC	EC	EC	EC		EC
102-103	Open Office, Corridor	House		EC	EC	EC	EC	EC	EC	EC	EC	EC	EC		EC
100-101	Reception, Entry	House		EC	EC	EC	EC	EC	EC	EC	EC	EC	EC		EC
112	Workroom	House		EC	EC	EC	EC	EC	EC	EC	EC	EC	EC		EC
105	Senior Pastor	House		EC	EC	EC	EC	EC	EC	EC	EC	EC	EC		EC
106	Conference Room	House		EC	EC	EC	EC	EC	EC	EC	EC	EC	EC		EC
104, 106, 109-111, 113-114	Offices	House		EC	EC	EC	EC	EC	EC	EC	EC	EC	EC		EC
112	Storage	House		EC	EC	EC	EC	EC	EC	EC	EC	EC	EC		EC
120-121	Restrooms	House		EC	EC	EC	EC	EC	EC	EC	EC	EC	EC		EC

2 Lighting Responsibility Matrix

Type	Room #	Room	Purpose	Fixture Make	Fixture Model	Mounting	Height (BOE)	Control Type	Notes
A	118	Chapel	House Lights	The Light Source	Mini	Ceiling	13'-6"	DMX	
B	118	Chapel	Theatrical Lights	Various	Various	Pipe	Various	DMX/Relay	

Schedule of light fixtures that SRS is specifying or providing. For all other fixture schedules, see appropriate specifier's documentation (AVL 2.23.2)

3 Lighting Schedule

Sheet Notes
1) Coordinate all lighting, circuits and control with SRS.
2) SRS to specify or approve house light fixtures within the performance space or spaces opening into performance rooms

FOR CONSTRUCTION

Stark Raving Solutions
10413 W 84th Terrace | Lenexa, KS 66214
866-275-3261 | 913-383-0243
www.starkravingsolutions.com

FOR REFERENCE ONLY
REFER TO ALL ARCHITECTURAL AND MEP ENGINEERING DRAWINGS FOR CONSTRUCTION DETAILS

NOTICE: ANY REFERENCES TO STRUCTURAL OR ELECTRICAL INFORMATION ARE FOR REFERENCE ONLY; STARK RAVING SOLUTIONS IS NOT LICENSED FOR AND DOES NOT PERFORM STRUCTURAL OR ELECTRICAL ENGINEERING. NO ANALYSIS HAS BEEN MADE BY STARK RAVING SOLUTIONS CONCERNING EITHER AREA. THE SEAL OF A REGISTERED PROFESSIONAL ENGINEER WILL APPEAR ON THESE DRAWINGS IF THEY HAVE BEEN REVIEWED AND APPROVED BY A LICENSED ENGINEER.

100% CD

PHASE II ADDITION TO:
THE SUMMIT
3381 NW CHIPMAN ROAD
LEE'S SUMMIT, MO 64081

PROJECT #: 15-678
ISSUE DATE: 02/05/2020
DRAWN BY: KG, EH
CHECKED BY: JJ

REVISIONS:
1.
2.
3.
4.
5.

SHEET No.
AVL 2.23
Lighting Details

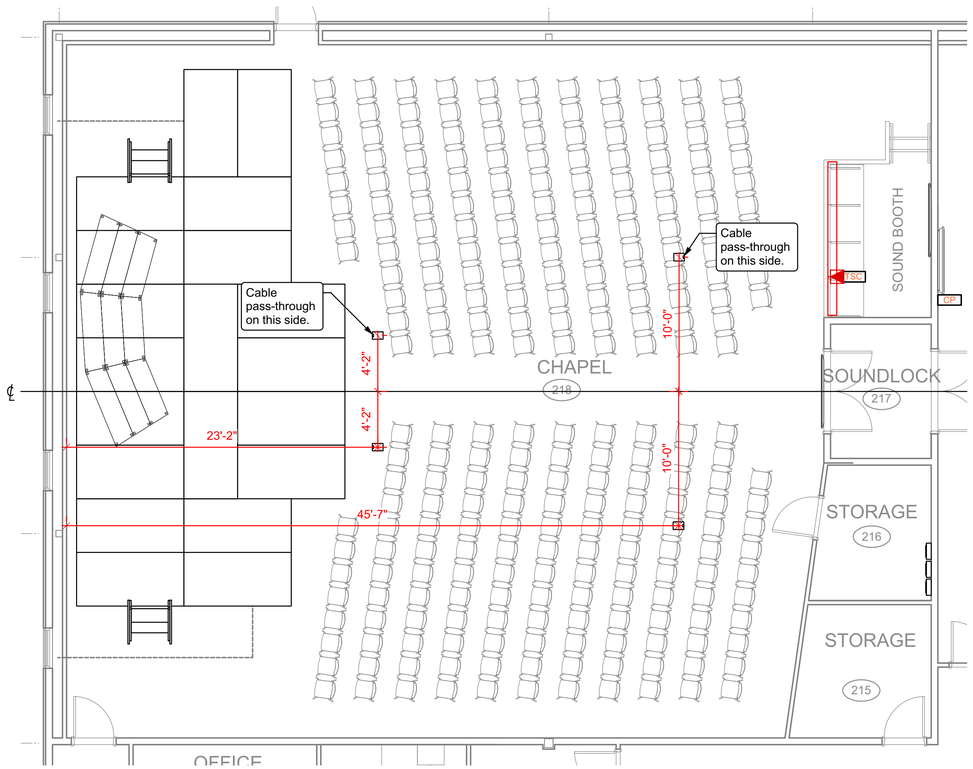

1 Floorbox Layout
Scale: 3/16" = 1'-0"

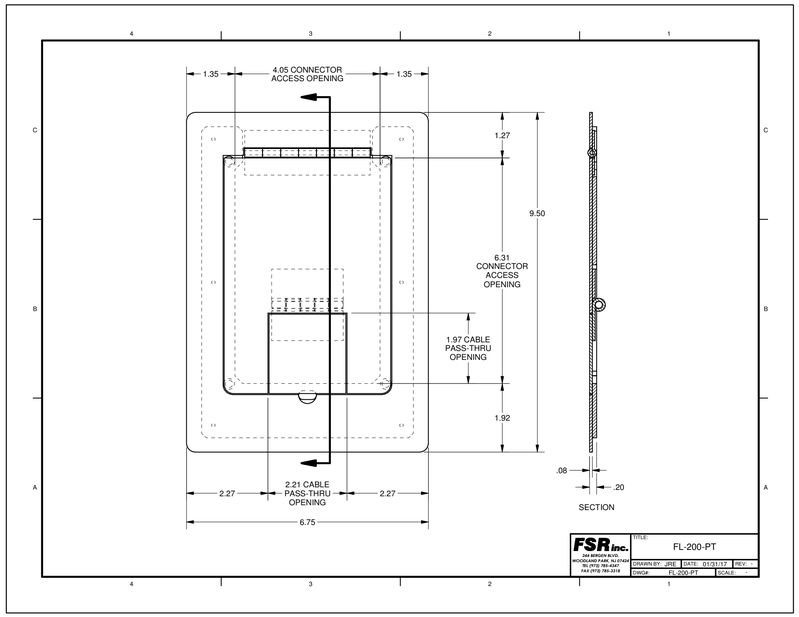

2 Floor Box Cover Detail

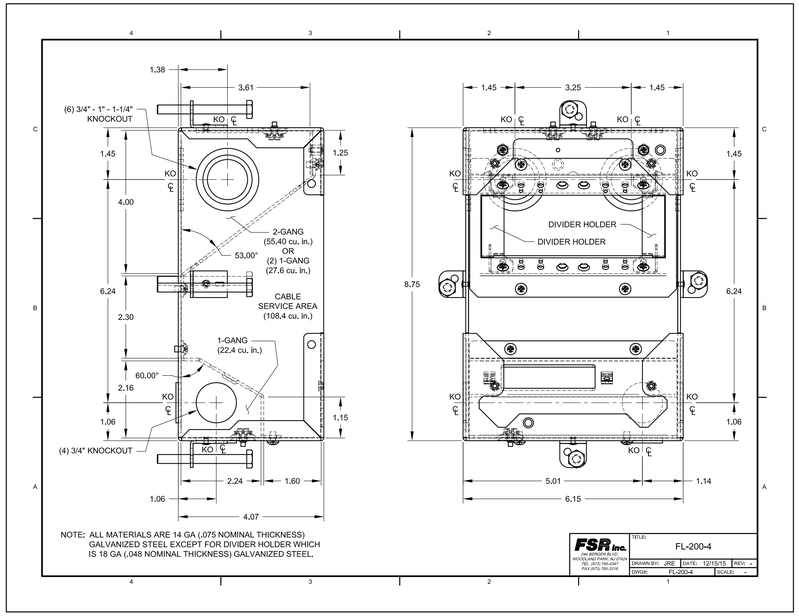

3 Floor Box Detail

FOR CONSTRUCTION

Stark Raving Solutions
10413 W 84th Terrace | Lenexa, KS 66214
866-275-3261 | 913-383-0243
www.starkravingsolutions.com

FOR REFERENCE ONLY
REFER TO ALL ARCHITECTURAL AND MEP ENGINEERING DRAWINGS FOR CONSTRUCTION DETAILS

NOTICE: ANY REFERENCES TO STRUCTURAL OR ELECTRICAL INFORMATION ARE FOR REFERENCE ONLY; STARK RAVING SOLUTIONS IS NOT LICENSED FOR AND DOES NOT PERFORM STRUCTURAL OR ELECTRICAL ENGINEERING. NO ANALYSIS HAS BEEN MADE BY STARK RAVING SOLUTIONS CONCERNING EITHER AREA. THE SEAL OF A REGISTERED PROFESSIONAL ENGINEER WILL APPEAR ON THESE DRAWINGS IF THEY HAVE BEEN REVIEWED AND APPROVED BY A LICENSED ENGINEER.

100% CD

PHASE II ADDITION TO:
THE SUMMIT
3381 NW CHIPMAN ROAD
LEE'S SUMMIT, MO 64081

PROJECT #: 15-678
ISSUE DATE: 02/05/2020
DRAWN BY: KG, EH
CHECKED BY: JJ

REVISIONS:
1.
2.
3.
4.
5.

SHEET No.
AVL 3.0
Floor Box Details

Tech Booth Notes:

- The purpose of the tech booth and FOH (front of house) location is to provide a position for the audio techs to mix where they are as close as possible to the congregation and what they hear, for the technical system operators to be able to see the platform and activities in the room and to provide space for the AVL control equipment.
- All dimensions shown reflect minimum requirements. Dimensions may be modified with approval from SRS.
- General construction is shown for reference. Actual construction details may differ, reference construction details on architectural drawings. See AVL Facilities Report for additional details.
- All booth construction materials and labor to be supplied by general contractor and appointed subcontractors and must comply with all applicable codes and regulations.
  - Floor construction should be screwed and glued and of heavy construction to avoid noise and rattles and be resonance-free. 2 Layers of 3/4" sub-floor or equivalent.
  - Booth front wall to be acousticly transparent construction.
  - Operator platform to be 21" above main floor.
  - See room drawings for exact sound booth location.
- All surfaces should be finished to match room décor.
  - Floor covering should be a low static option (treated carpet or anti-static material).
- DIV 12.30 - CASEWORK:
  - Countertops should have a durable finished surface.
  - 2" Cable drop behind to be provided behind counter top.
  - Edges of countertop should be radiused for a soft edge or have mitered wood edge.
  - Provide mounting support for keyboard tray below audio console.
  - Table top rack and under counter racks to be provided by SRS.
  - Countertop and supports must leave noted clear space for AVL equipment and wire tray.
- DIV 26 - ELECTRICAL SYSTEMS:
  - Electrical power conduits should be routed as far away from low voltage signal conduits as possible.
  - Ground isolation must be maintained to all IG circuits.
  - Provide and install under counter wire tray - 8" x 4"
  - Provide undercounter LED work lights with local wall switch control.
- DIV 27.20 DATA NETWORKS:
  Provide data network drops under counter.

Owner provided equipment and furnishings (OFE):

- Stools and chairs shall be provided by owner for operators in booth.

1 Tech Booth General Notes

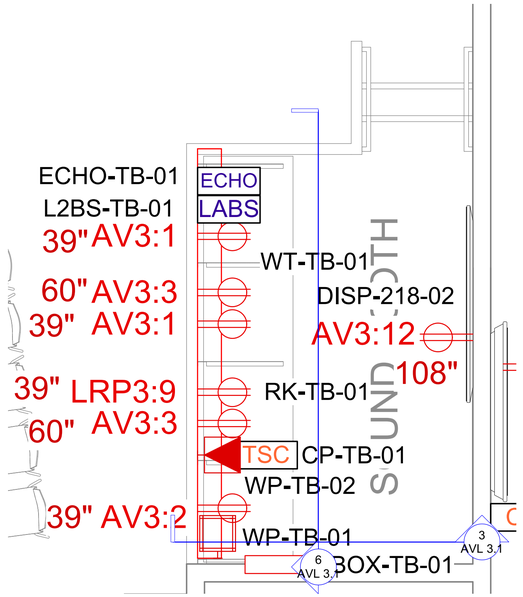

2 Tech Booth Layout
Scale: 1/2" = 1'-0"

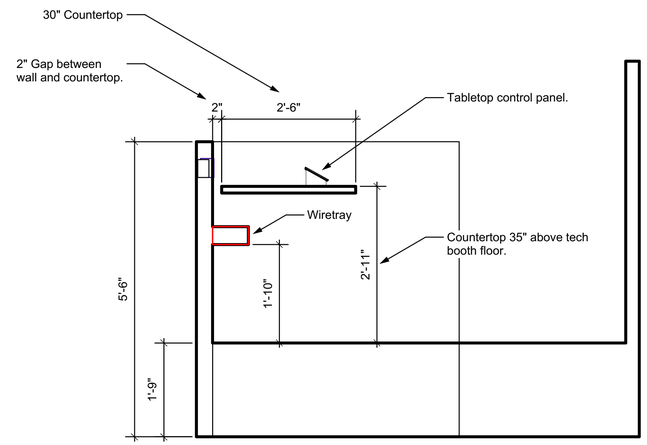

3 Section
Scale: 3/4" = 1'-0"

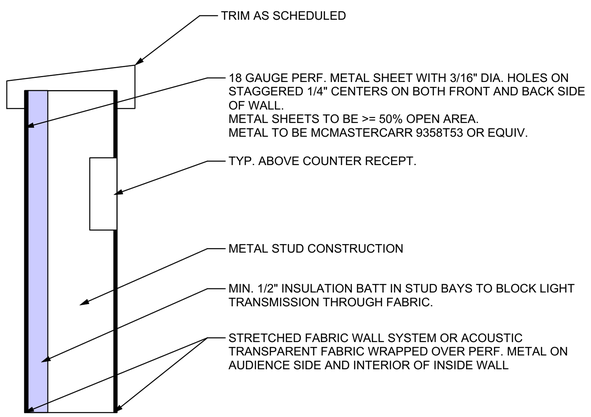

4 Front Wall Detail

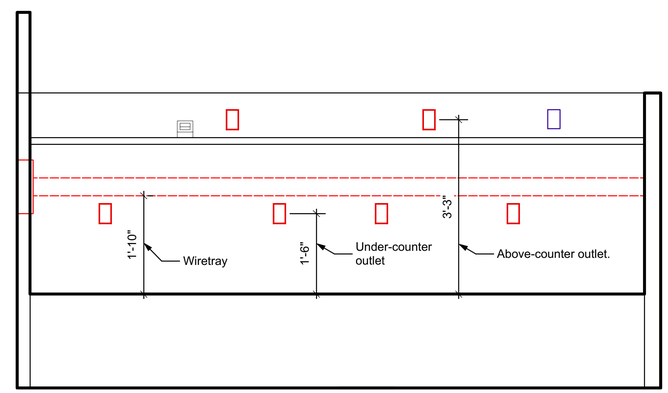

5 Section
AVL 3.1 Scale: 3/4" = 1'-0"

FOR CONSTRUCTION

Stark Raving Solutions
10413 W 84th Terrace | Lenexa, KS 66214
866-275-3261 | 913-383-0243
www.starkravingsolutions.com

FOR REFERENCE ONLY
REFER TO ALL ARCHITECTURAL AND MEP ENGINEERING DRAWINGS FOR CONSTRUCTION DETAILS

NOTICE: ANY REFERENCES TO STRUCTURAL OR ELECTRICAL INFORMATION ARE FOR REFERENCE ONLY; STARK RAVING SOLUTIONS IS NOT LICENSED FOR AND DOES NOT PERFORM STRUCTURAL OR ELECTRICAL ENGINEERING. NO ANALYSIS HAS BEEN MADE BY STARK RAVING SOLUTIONS CONCERNING EITHER AREA. THE SEAL OF A REGISTERED PROFESSIONAL ENGINEER WILL APPEAR ON THESE DRAWINGS IF THEY HAVE BEEN REVIEWED AND APPROVED BY A LICENSED ENGINEER.

100% CD

PHASE II ADDITION TO:
THE SUMMIT
3381 NW CHIPMAN ROAD
LEE'S SUMMIT, MO 64081

PROJECT #: 15-678
ISSUE DATE: 02/05/2020
DRAWN BY: KG, EH
CHECKED BY: JJ

REVISIONS:
1.
2.
3.
4.
5.

SHEET No.

AVL 3.1
Tech Booth Details

Belden Part Number	Belden Plenum Part Number	Smartwire Part Number	Smartwire Plenum Part Number	Signal Group	Cable Application	Max. Run Length (ft.)	Max. Run Length (ft.) Plenum	Description	Jacket NEC Spec
Audio									
1800B	1801B	241PDIGICOMP	241PDIGICOMP	D	AES / EBU	328	328	Single Pair Audio Cable, 24 AWG tinned copper conductors, 24 AWG drain wire.	CMR
1802B	(2) 1801B	242PDIGICOMP	242PDIGICOMP	D	AES / EBU	328	328	Double Pair Audio Cable, 24 AWG stranded tinned copper conductors, 24 AWG drain wire.	CMR
1504a	9451DP	22-2PREZP-ZIP	22-2PREZP-ZIP	M, D	Mic/Line Audio, use plenum if not in conduit.	350	1000	22 AWG stranded tinned copper conductors.	CM
9451	9451P	22-1PREZ	22-1PREZP	M, D	Mic/Line Audio	1000	1000	22 AWG stranded tinned copper conductors 22 AWG stranded tinned copper drain wire.	CMR
9451D	9451DP	22-2PREZP-ZIP	22-2PREZP-ZIP	M, D	Mic/Line Audio	1000	1000	22 AWG stranded tinned copper conductors 22 AWG stranded tinned copper drain wire.	CMR
Loudspeaker									
5T00UP	6T00UP		10-02P	S	Loudspeaker, use plenum if not in conduit.	Calculate	Calculate	2-10 AWG bare high-conductivity ETP copper conductors. For audio only.	CL3
5000UE	6000UE	12-02	12-02P	S, C	Loudspeaker	Calculate	Calculate	2-12 AWG stranded bare copper conductors.	CL3R
5100UE	6100UE	14-02	14-02P	S, C	Loudspeaker	Calculate	Calculate	2-14 AWG stranded bare copper conductors.	CL3R
5200UE	6200UE	16-02	16-02P	S	Loudspeaker	Calculate	Calculate	2-16 AWG stranded bare copper conductors.	CMR
5300UE	6300UE		18-02P	S	Loudspeaker	Calculate	Calculate	2-18 AWG stranded bare copper conductors.	CMR
8810	N/A			N/A	Class 1 Loudspeaker, in conduit only.	Calculate	Calculate	2-10 AWG stranded bare copper conductors.	TC
8812	N/A			N/A	Class 1 Loudspeaker, in conduit only.	Calculate	Calculate	2-12 AWG stranded bare copper conductors.	TC
RF									
7810R	7733A	RG8	RG8P	D	Wireless Antenna, .	200	150	RG-8 type, 10 AWG solid .108" bare copper-covered aluminum conductor, gas-injected foam HDPE insulation, Duobond II + tinned copper braid shield	CMR
9258	89913			D	Wireless Antenna, Use plenum if not in conduit.	65	135	RG-8 type, 16 AWG stranded .058" bare copper conductor, gas-injected FPE insulation, bare copper braid shield	CM
Data									
1583a	1585a			D, C	CAT5e, Remote Control, Network	328	328	Category 5e Nonbonded-Pair Cable 24 AWG solid bare copper conductors.	CMR
1533R	1533P			D	Shielded CAT5e, Data, Media	328	328	Category 5e Nonbonded-Pair Cable 24 AWG solid bare copper conductors, overall Beldfoil shield drain wire.	CMR
2412A	2413A	CAT6	CAT6P	D, C	CAT6, Data, Media over CAT6, Digital Audio	328	328	Category 6 Nonbonded-Pair Cable 23 AWG Solid Bare Copper Conductors.	CMR
2412F	2413F	CAT6S	CAT6SP	D, C	Shielded Cat6 Data, Digital Audio,HD-BaseT	328	328	Category 6 Nonbonded-Pair ScTP Cable 23 AWG Solid Bare Copper Bonded-Pair Conductors, F/UTP Overall Foil Screen with Drain Wire.	CMR
Video									
1855a	1855p	MINIHD		D	Analog and Digital Video - Short Runs & Inside Racks	302	262	Coax - Sub-Miniature 23 AWG solid .023" bare copper conductor, gas-injected foam HDPE insulation, Duofoil + tinned copper braid shield.	CMR
1505a	1506a	RG59HD	RG59HDP	D	Analog and Digital Video	425	350	Coax - RG-59/U Type 20 AWG solid .032" bare copper conductor, gas-injected foam HDPE insulation, Duofoil + tinned copper braid shield.	CMR
1694a	1695a	RG6HD	RG6HDP	D	Analog and Digital Video - Long Runs	509	430	RG-6/U Type, 18 AWG solid .040" bare copper conductor, gas-injected foam HDPE insulation, Duofoil + tinned copper braid shield.	CMR
Intercom									
8760	82760	108760		S	Intercom, use plenum if not in conduit.	500	500	2-18 AWG stranded tinned copper conductors 20 AWG stranded tinned copper drain wire.	CM
Lighting									
1583a	1585a			D	Lighting Network, Data with cat5 IDC	328	328	Category 5e Nonbonded-Pair Cable 24 AWG solid bare copper conductors.	CMR
2412A	2413A	CAT6	CAT6P	D	Lighting Network, Data with cat6 IDC	328	328	Category 6 Nonbonded-Pair Cable 23 AWG Solid Bare Copper Conductors.	CMR
1800B	1801B	241PDIGICOMP	241PDIGICOMP	D	DMX, RDM	1800	1800	Single Pair Audio Cable, 24 AWG tinned copper conductors, 24 AWG drain wire.	CMR
9271	0.92208457			D	DMX, RDM, use plenum if not in conduit.	1800	1800	124 Ohm Twinax 25 AWG stranded tinned copper conductors stranded tinned copper drain wire.	CM
9729	1			D	DMX/RDM, use plenum if not in conduit.	1000	1000	RS-232/422, Digital Audio Cable, 24 AWG stranded tinned copper conductors, 24 AWG stranded tinned copper drain wire.	CM
5101UE	6101UE		14-03P	C	Unison	N/A	N/A	Security & Commercial Audio Cable, 3-14 AWG stranded bare copper conductors.	CL3R

All other wire types or manufactures must be approved by SRS prior to use or installation.

1 Acceptable Cable Types

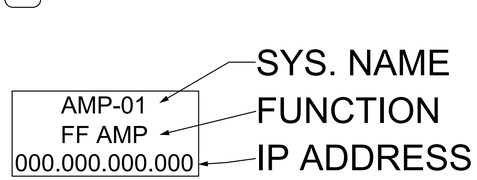

NOTE: TEXT TO BE AT LEAST 1/4" TALL. ACTUAL LABELS MAY VARY DEPENDING ON INSTALLATION REQUIREMENTS.

3 Typ.Label For Rack Mounted Equip.

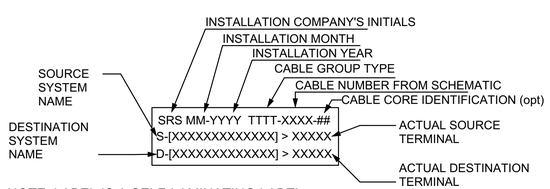

NOTE: LABEL IS A SELF-LAMINATING LABEL.
2.0" X .47" X 1.33"

4 Wire Label Details

WARNING

LIGHT POSITION NAME

This lighting position has been designed with the following limits to end user loading. Any loads attached to this pipe must not exceed:

30 lbs/ft distributed loading
100 lb point loads, must be spaced at least 5 feet apart.
2100 lbs total load on position

6 Typical Lighting Position Label

LIGHTING POSITION LABEL NOTES:
1. LABEL TO BE ATTACHED TO BOTH ENDS OF THE LIGHTING POSITION UNLESS THE POSITION IS 10FT OR LESS IN LENGTH, THEN A SINGLE END.
2. IF A LIGHTING POSITION IS LONGER THAN 36FT, ADD A LABEL IN THE CENTER OF THE POSITION.
3. LABELS TO BE INSTALLED SUCH THAT PERSON LOADING A LIGHTING POSITION CAN READ THE LABEL, TYPICALLY ON THE TOP HALF OF THE PIPE AND FACING THE DIRECTION MOST LIKELY TO BE SEEN.
4. LABEL TO BE A MINIMUM OF 2" TALL AND 5" WIDE.
5. THE LABEL MAY HAVE A BLACK OR WHITE BACKGROUND TO MATCH PIPE; LETTERS SHOULD BE HIGH CONTRAST.
6. LABEL TO BE PERMANENTLY ADHERED TO THE PIPE AND PROTECTED AGAINST DAMAGE.
7. LIMITS FOR LABEL SHOULD COME FROM DRAWING AVL 1.25 LIGHT POSITION LOAD SCHEDULE.

Manufacturer	Part Number	Cable Application	Description	Notes
Neutrik	NC3MXX (-B)	Mic/Line Audio, Intercom	3 pole male cable connector with nickel housing and silver contacts	Intercom connections to include shrink tubing on shields and an overall shrink tubing to protect exposed end of ovearall jacket
Neutrik	NC3FXX (-B)	Mic/Line Audio, Intercom	3 pole female cable connector nickel housing silver contacts	Intercom connections to include shrink tubing on shields and an overall shrink tubing to protect exposed end of ovearall jacket
Neutrik	NP3X, NP3C	Mic/Line Audio	3 pole 1/4" professional phone plug nickel housing nickel contacts and chuck type strain relief.	
Neutrik	NL4FC , NL4FX, NL4FRX, NL8FC	Speaker	4 pole cable connector chuck type strain relief - Standard duty	NL4FC / NL8FC (18-12awg), NL4FX (12-10awg)
Neutrik	NLT4FX(-BAG), NLT4MX(-BAG), NLT8FX(-BAG)	Speaker	4 pole cable connector chuck type strain relief - Heavy Duty - Metal Shell	12-10 AWG
Neutrik/REAN	NF2C-B/2 / NYS373	Consumer Level Audio	2 pole cable connector "RCA"	
Platinum	EZ-RJ45 100003	Data, Control, over CAT5, CAT5e	RJ-45 Crimp on Connector for solid or stranded conductors	Use manufacturers approved snag proof strain relief boots is required. Approved crimp tool required in manufacture of all connectors
Platinum	EZ-EX 44 RJ45 CAT6	Data, Control, Digital Video, CAT5e/6/6A	RJ-45 Crimp on Connector for 24-22AWG solid or Stranded conductors (.039"-.044")	Use manufacturers approved snag proof strain relief boots is required. Approved crimp tool required in manufacture of all connectors
Platinum	EZ-EX 48 RJ45 CAT6A	Data, Control, Digital Video, CAT6A	RJ-45 Crimp on Connector for 23-22AWG solid or Stranded conductors (.043"-.048")	Use manufacturers approved snag proof strain relief boots is required. Approved crimp tool required in manufacture of all connectors
Platinum	EZ-EX 44 Shielded, External Ground	Data, Control, Digital Video, CAT5e/6/6A	RJ-45 Shielded External Ground Crimp on Connector for solid or Stranded conductors	Use manufacturers approved snag proof strain relief boots is required. Approved crimp tool required in manufacture of all connectors
Belden	CAPFMUS-S1	Data, Control, Digital Video, CAT5e/6/6A	Category 6A Field Mount Plug, 568A/B, UTP, Small AWG (0.035 - 0.042 in).	Approved crimp tool required in manufacture of all connectors
Belden	CAPFMUL-S1	Data, Control, Digital Video, CAT5e/6/6A	Category 6A Field Mount Plug, 568A/B, UTP, Large AWG (0.042 - 0.0480 in).	Approved crimp tool required in manufacture of all connectors
Belden	CAPFMFS-S1	Data, Control, Digital Video, CAT5e/6/6A	Category 6A Field Mount Plug, 568A/B, Shielded, Small AWG (0.035 - 0.042 in).	Approved crimp tool required in manufacture of all connectors
Belden	CAPFMFL-S1	Data, Control, Digital Video, CAT5e/6/6A	Category 6A Field Mount Plug, 568A/B, Shielded, Large AWG (0.042 - 0.048 in).	Approved crimp tool required in manufacture of all connectors
Kings	2045	Analog and Digital	75 ohm BNC connector for Belden 1855a	Approved stripper and crimp tool required. Finished connection should be able to withstand 90 lbs of pull force
Kings	2054	Analog and Digital	75 ohm BNC connector for Belden 1505a	Approved stripper and crimp tool required. Finished connection should be able to withstand 90 lbs of pull force
Kings	2046	Analog and Digital	75 ohm BNC connector for Belden 1694a	Approved stripper and crimp tool required. Finished connection should be able to withstand 90 lbs of pull force
Amphenol	112533	Analog and Digital	50 ohm BNC connector for Belden 9258	Approved stripper and crimp tool required. Finished connection should be able to withstand 90 lbs of pull force
Amphenol	112563	Analog and Digital	50 ohm BNC connector for Belden 7810R	Approved stripper and crimp tool required. Finished connection should be able to withstand 90 lbs of pull force
Neutrik	NC4FXX (-B)	Camera Power	4 pole female cable connector nickel housing silver contacts	Connections to include shrink tubing on shields, connections and an overall shrink tubing to protect exposed end of ovearall jacket
Neutrik	NC4MXX (-B)	Camera Power	4 pole male cable connector with nickel housing and silver contacts	Connections to include shrink tubing on shields, connections and an overall shrink tubing to protect exposed end of ovearall jacket
REAN	NYS2031	stereo unbalanced audio"	3 pole mini TRS with nickel housing	
Neutrik	NC5FXX (-B)	DMX	5 pole female cable connector nickel housing silver contacts	
Neutrik	NC5MXX (-B)	DMX	5 pole male cable connector with nickel housing and silver contacts	
Neutrik	NE8MC / -B	EtherCON	RJ45 cable connector carrier for preassembled (/ Field Terminated) RJ45 plugs consists of shell, fixing disk, chuck, bushing and boot.	EtherCON shell for non-ethercon connectors.
Neutrik	NAC3FCA/NAC3FCB	Power	PowerCON Lockable cable connector, power, screw terminals	Separate power in and power out connectors. Match color of Chassis connector.
Neutrik	NBB75DFIB	Analog and Digital	75 ohm barrel panel connector	
Neutrik	NC3MD-L-B-1	Mic/Line Audio, Intercom	XLR male panel connector	
Neutrik	NC3FD-L-B-1	Mic/Line Audio, Intercom	XLR female panel connector	
Neutrik	NJ3FP6C	Mic/Line Audio	TRS panel connector	
Neutrik	NE8FDX-Y6-B	Cat6a	Cat6a panel connector	
Neutrik	NE8FDY-C6-B	Cat6	Cat6 panel connector	
Neutrik	NE8FDV-Y110-B	Cat5e	Cat5e panel connector	
Misc	Various	As specified in design	Various other connectors specifically specified in the system design	Included Dsub, Cat6a, RCP, Long barrel version and various other connectors for applications beyond those defined above.

All other connector types or manufactures must be approved by SRS prior to use or installation. All connectors to be rated for wire type connected to.

2 Acceptable Connector Types

CABLE INSTALLATION STANDARDS
1. AVL CABLES TO BE INSTALLED IN ACCORDANCE WITH ALL NEC AND LOCAL CODE REQUIREMENTS IN EFFECT AT THE TIME OF INSTALLATION.
2. LOCAL CODE WILL TAKE PRECEDENCE IN CONFLICT.
3. AVL CABLE INSTALLATION TO MEET OR EXCEED INDUSTRY BEST PRACTICES.
4. CABLE JACKET RATING TO BE APPROPRIATE FOR THE LOCATION AND USE OF THE CABLE INSTALLED (I.E. CMR OR PLENUM.)

GENERAL WIRE REQUIREMENTS
1. WIRES MAY NOT BE SPLICED OR EXTENDED BUT MUST BE CONTINUOUS FROM SOURCE TO DESTINATION.
2. CABLES TO BE BUNDLED NEATLY WITH LIKE CABLE / SIGNAL TYPES IN RACK. CABLES TO BE BUNDLED WITH VELCRO CABLE MANAGEMENT TIES OR LACING STRING. USE OF ELECTRICAL TAPE OR PLASTIC / NYLON CABLE TIES IS NOT ACCEPTABLE.
3. ALL CABLES IN CABLE TRAYS SHALL BE NEATLY INSTALLED, MAINTAINING SEPARATION BETWEEN DIFFERENT SIGNAL TYPES. USE METAL CABLE TRAY DIVIDERS BETWEEN HV AND LV.
4. ALL WIRE BASKETS SHALL BE CONTINUOUSLY GROUNDED.

RACK MOUNTED EQUIPMENT
1. RACK MOUNTED EQUIPMENT SHALL BE INSTALLED SQUARE AND PLUMB. EQUIPMENT SHALL LINE UP WITH OTHER EQUIPMENT MOUNTED ABOVE OR BELOW FOR A NEAT APPEARANCE.
2. RACK MOUNTED EQUIPMENT SHALL BE SUPPORTED FROM THE REAR IF RECOMMENDED OR REQUIRED BY THE MANUFACTURER.
3. RACK MOUNTED EQUIPMENT SHALL BE INSTALLED WITH MIDDLE ATLANTIC HW SERIES BLACK 10/32 SCREWS. SCREWS NOT TO BE OVER TORQUED; SHOULD BE IN A RANGE OF 3-7 INCH/POUNDS.

MINIMUM CABLE LENGTHS
1. CABLES TERMINATING IN STAGE FLOOR BOXES OR WALL PANELS SHOULD EXTEND A MINIMUM OF 2 FEET (24") OUT OF BOX BEFORE TERMINATION AND BE TERMINATED IN SUCH A WAY THAT THE PANEL CAN BE REMOVED FROM THE FLOOR OR WALL AND THE TERMINATION SIDE CAN BE EASILY ACCESSED FOR INSTALLATION AND SERVICE.
2. CABLES TERMINATING IN EQUIPMENT RACKS SHALL BE CUT TO LENGTH AND TERMINATE AT A BULKHEAD PANEL ON THE REAR RAILS OF THE EQUIPMENT RACK.
3. WHEN NO BULKHEAD PANEL IS PRESENT OR CABLES CONNECT DIRECTLY TO EQUIPMENT PER THE SYSTEM SCHEMATIC, CABLES SHALL EXTEND INTO THE RACK A MINIMUM OF TWO TIMES (2X) THE RACK HEIGHT BEFORE TERMINATION.
4. ALL CABLES SHOULD BE MANAGED WITH SIMILAR SIGNAL LEVELS OR GROUPS AND TERMINATED NEATLY TO AVL EQUIPMENT. SERVICE LOOPS SHALL BE LEFT FOR FUTURE SERVICING AND INTEGRATED INTO THE WIRE MANAGEMENT.
5. CABLES TERMINATING TO MOVABLE EQUIPMENT (EQUIPMENT RACKS ON WHEELS, COUNTER TOP EQUIPMENT RACKS, COUNTER TOP AV EQUIPMENT) SHALL INCLUDE A MINIMUM OF 10 FEET SERVICE LOOP TO BE NEATLY LAID IN CABLE MANAGEMENT TRAYS OR ATTACHED TO THE UNDERSIDE OF THE COUNTERTOPS.
6. CABLES TERMINATING TO SPEAKERS AND OTHER MOUNTED AV EQUIPMENT SHALL EXTEND TO DEVICE AND INCLUDE A MINIMUM 24" SERVICE LOOP AFTER WIRE MANAGEMENT.

WIRE PROTECTION
1. WIRES ROUTED ACROSS THE EDGE OF OR THROUGH A HOLE IN A METAL CHASSIS OR RACK PART MUST BE PROTECTED FROM ABRASION BY SLEEVING, GROMMETS, RESILIENT EDGING OR RADIUS OF THE METAL PART.
2. WIRES ROUTED THROUGH HOLES OR OVER EDGE AND SUBJECT TO CONSTANT PRESSURE OR WEIGHT, THE METAL EDGE MUST HAVE A RADIUS EQUIVALENT TO THE MINIMUM BEND RADIUS OF THE CABLE OR THE CABLE MUST BE PROPERLY PROTECTED OR SUPPORTED.
3. WHERE IT IS NECESSARY TO USE ADDED PROTECTION FOR A WIRE OR CABLE, THE PROTECTIVE MATERIAL MUST BE SECURED IN SUCH A WAY AS TO ASSURE ITS INTENDED FUNCTION.
4. WIRING MUST BE KEPT CLEAR OF AND PROTECTED AGAINST HIGH TEMPERATURE SOURCES AND MOVING PARTS.

5 Cable Installation Details

FOR CONSTRUCTION

Stark Raving Solutions
10413 W 84th Terrace | Lenexa, KS 66214
866-275-3261 | 913-383-0243
www.starkravingsolutions.com

FOR REFERENCE ONLY
REFER TO ALL ARCHITECTURAL AND MEP ENGINEERING DRAWINGS FOR CONSTRUCTION DETAILS

NOTICE: ANY REFERENCES TO STRUCTURAL OR ELECTRICAL INFORMATION ARE FOR REFERENCE ONLY; STARK RAVING SOLUTIONS IS NOT LICENSED FOR AND DOES NOT PERFORM STRUCTURAL OR ELECTRICAL ENGINEERING. NO ANALYSIS HAS BEEN MADE BY STARK RAVING SOLUTIONS CONCERNING EITHER AREA. THE SEAL OF A REGISTERED PROFESSIONAL ENGINEER WILL APPEAR ON THESE DRAWINGS IF THEY HAVE BEEN REVIEWED AND APPROVED BY A LICENSED ENGINEER.

100% CD

PHASE II ADDITION TO:
THE SUMMIT
3381 NW CHIPMAN ROAD
LEE'S SUMMIT, MO 64081

PROJECT #: 15-678
ISSUE DATE: 02/05/2020
DRAWN BY: KG, EH
CHECKED BY: JJ

REVISIONS:
1.
2.
3.
4.
5.

SHEET No.

AVL 6.0
Installation Requirements