NOTE: GOVERNING CODES & GENERAL CONTRACTOR'S WRITTEN SPECIFICATIONS TAKE PRECEDENCE OVER THESE PLANS.

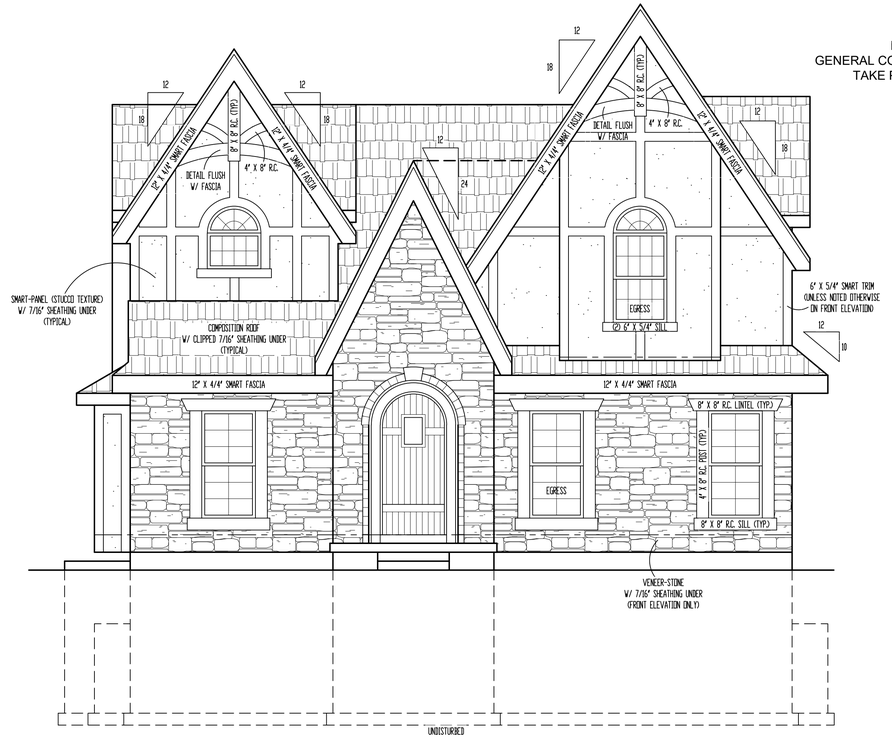


FRONT ELEVATION
SCALE: 1/4" = 1'-0"

ELEVATIONS:
- SMART-PANEL (STUCCO TEXTURE) SIDING AND VENEER STONE ON ALL ELEVATIONS
- COMPOSITION ROOF SHINGLES
- LOCATE ROOF AND SOFFIT VENTS PER CODE
- ADJUST FOUNDATION TO GRADE

OPTIONAL DECK:
- DECK CONSTRUCTION TO COMPLY WITH MUNICIPALITY'S RESIDENTIAL DECK STANDARDS
- 2" X 10" #2 TTD. @ 16" O.C. FLOOR JOISTS (MAX. SPAN 14'-0")
- 2" X 6" CEDAR DECKING
- 6" X 6" TTD./CEDAR POSTS
- 2" X 2" CEDAR SPINDLES
- 2" X 6" CEDAR TOP RAIL
- DETERMINE OPTIONAL STAIRS ON SITE

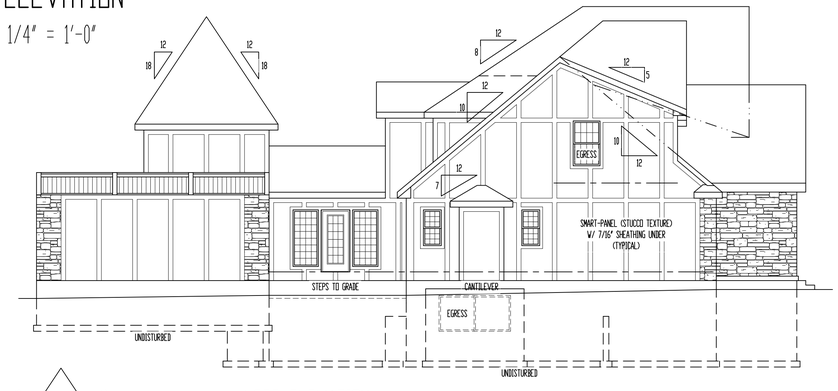


LEFT ELEVATION
SCALE: 1/8" = 1'-0"

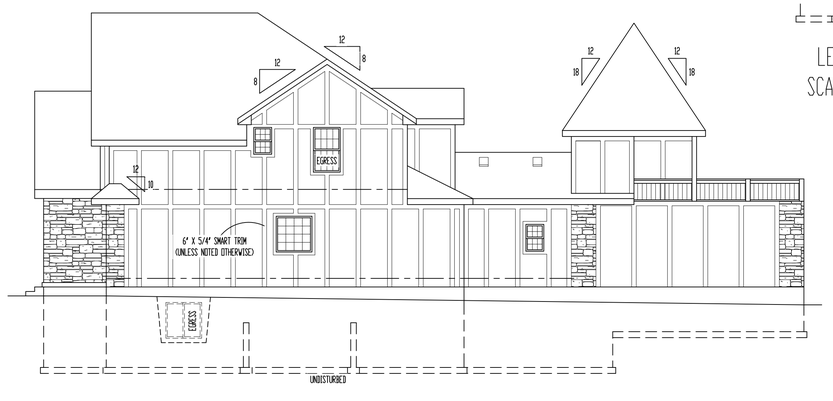


RIGHT ELEVATION
SCALE: 1/8" = 1'-0"

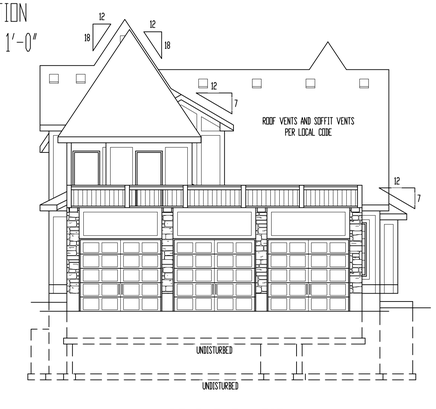


REAR ELEVATION
SCALE: 1/8" = 1'-0"


These plans and specifications are protected under federal copyright laws. Copyright A.D. 2019 Bellah Homes, LLC.

Care and effort have gone into the creation and design of this plan. However, the designer is not an architect or engineer and construction from these plans should not be undertaken without the assistance of a construction professional, architect or engineer. Because of the impossibility of any on site consultation and supervision, Viewpoint Residential Design, LLC, and Designer assume no responsibility for any damages, including structural failures, due to any deficiencies, omissions or errors in the design or blueprints. Also, site conditions may vary from those illustrated on this plan. Designer does not warrant the suitability of these plans for use on your specific site. Consult your architect to determine the suitability of these plans for your specific site and application.


*"For God so loved the world, that he gave his only begotten Son, that whosoever believeth in him should not perish, but have everlasting life"* (John 3:16).

VIEWPOINT RESIDENTIAL DESIGN LLC


Bellah Homes
1272 SW Arborcrest Cir.
Lee's Summit, MO
O: (816)697-2870
www.BellahHomes.com


Bellah HOMES

Site Description:
**Lot 101, Pergola Park, New Longview**

Street Address:
**3229 SW Mary St., Lee's Summit, Missouri**

Project Title:
**The OXFORD 4**

General Contractor:
**Bellah Homes, LLC**

STATE OF MISSOURI
DENNIS HEIER
NUMBER PE-2010001772
PROFESSIONAL ENGINEER
2/12/2020

Date: 2 - 11 - AD 2020
Rev. 1:
Rev. 2:
Rev. 3:

Sheet Title:
**ELEVATIONS**

Sheet No.:
**A-1** of 5

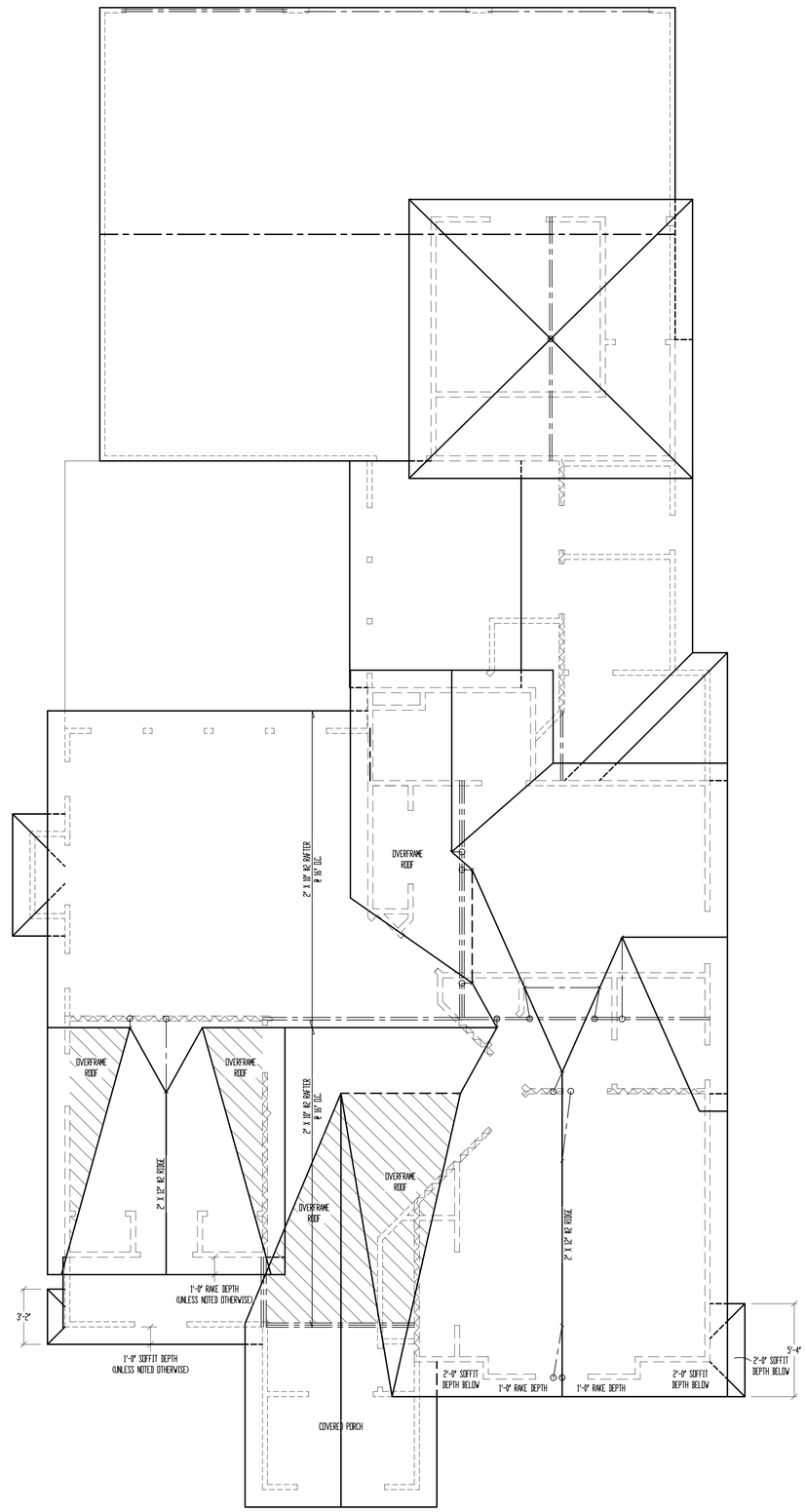


| ROOF AREA | |
|---|---|
| PITCH | SQ. |
| 24/12 | 3.58 |
| 18/12 | 13.29 |
| 10/12 | 6.93 |
| 8/12 | 2.40 |
| 7/12 | 1.64 |
| 6/12 | 3.88 |
| 5/12 | 0.85 |
| 4/12 | 0.63 |

# ROOF

SCALE: 1/4" = 1'-0"

*ALL RAFTERS SHALL BE 2" X 6" #2 @ 16" O.C., UNLESS NOTED OTHERWISE.

FLASHING NOTE:
DRIP EDGE, VALLEYS AND FLASHINGS TO BE METAL CLAD.

ROOF NOTES:
ROOF DESIGNED FOR LIGHT ROOF COVERING
30psf TOTAL LOAD (10psf DL, 20psf LL (SL))

* RAFTERS (HEM-FIR, DOUG-FIR, OR EQUAL)
SEE SPAN CHARTS BELOW

CODE MINIMUM

| RAFTERS | SPACING | MAX HORIZONTAL CLEARSPAN |
|---|---|---|
| #2-2x6 | @24" O.C. | 11'-7" |
| #2-2x6 | @16" O.C. | 14'-2" |
| #2-2x8 | @24" O.C. | 14'-8" |
| #2-2x8 | @16" O.C. | 17'-11" |
| #2-2x10 | @24" O.C. | 17'-10" |
| #2-2x10 | @16" O.C. | 21'-11" |

NOTE: CODE MINIMUM ALLOWS FOR A RAFTER DEFLECTION OF L/180 TOTAL LOAD

HIGHER PERFORMANCE (RECOMMENDED)

| RAFTERS | SPACING | MAX HORIZONTAL CLEARSPAN |
|---|---|---|
| #2-2x6 | @24" O.C. | 8'-6" |
| #2-2x6 | @16" O.C. | 9'-9" |
| #2-2x8 | @24" O.C. | 11'-2" |
| #2-2x8 | @16" O.C. | 12'-9" |
| #2-2x10 | @24" O.C. | 14'-3" |
| #2-2x10 | @16" O.C. | 16'-2" |

DEFLECTION = L/360 LIVE LOAD, L/240 TOTAL LOAD

* VAULTS TO BE 2x10 DEPTH
* RIDGE BOARDS ARE: (UNLESS OTHERWISE NOTED)
  - #2- 2X8 UP TO 10/12 PITCH
  - #2- 2X10 OVER 10/12 PITCH
* ALL HIPS & VALLEYS ARE: (UNLESS OTHERWISE NOTED)
  - #2- 2X8 UP TO 10/12 PITCH
  - #2- 2X10 OVER 10/12 PITCH
* PURLINS ARE 2X6 MIN.
  - PURLIN STRUTS ARE AT 4'-0" O.C.
  - PURLIN STRUTS SHALL BE INSTALLED AT NOT LESS THAN A 45 DEGREE ANGLE WITH THE HORIZONTAL
  - ALL PURLINS STRUTS SHALL HAVE A MAXIMUM UNBRACED LENGTH OF 8'-0"
  - PURLINS STRUTS SHALL BE CONSTRUCTED IN A "I" CONFIGURATION AND PER THE FOLLOWING CHART:

| PURLIN STRUT | MAX PURLIN STRUT LENGTH |
|---|---|
| (2) 2x4 | 9'-0" |
| (1) 2x4 & (1) 2x6 | 12'-0" |
| (1) 2x6 & (1) 2x8 | 20'-0" |
| (2) 2x6 & (1) 2x8 | 30'-0" |
| CONSULT ARCH./ENGR. ) | 30'-0" |

* RIDGE BRACES ARE SAME AS PURLIN BRACES- SPACING, SIZE, CONFIGURATION, & INSTALLATION (SEE PURLIN BRACE NOTES ABOVE)
* HIP & VALLEY BRACES ARE SAME AS PURLIN SIZE, CONFIGURATION, & INSTALLATION (SEE PURLIN BRACE NOTES ABOVE)

* VERTICAL BRACE IF DOT IS UNDER HIP OR VALLEY
* SLASH IS TOP END OF BRACE ( / ), DOT IS BOTTOM OF BRACE ( o ).
* DENOTES BEARING WALL
* DENOTES ROOF BRACE
* DENOTES PURLIN
* DENOTES BEARING STRUCTURE

These plans and specifications are protected under federal copyright laws.
Copyright A.D. 2019 Bellah Homes, LLC.

Care and effort have gone into the creation and design of this plan. However, the designer is not an architect or engineer and construction from these plans should not be undertaken without the services of a construction professional and/or engineer. Because of the impossibility of any on site consultation and supervision, Viewpoint Residential Design, LLC. and Designer assume no responsibility for any damages, misuse or misinterpretation of these plans or any deviations from the drawings or blueprints. Also, site conditions may vary from those illustrated on this plan. Designer does not warrant the suitability of these plans for use on your specific site. Consult your architect to determine the suitability of these plans for your specific site and application.

*"For God so loved the world, that he gave his only begotten Son, that whosoever believeth in him should not perish, but have everlasting life"* (John 3:16).

VIEWPOINT RESIDENTIAL DESIGN, LLC

Bellah Homes
1272 SW Arborcrest Cir.
Lee's Summit, MO
O: (816)697-2870
www.BellahHomes.com

Site Description:
*Lot 101, Pergola Park, New Longview*

Street Address:
*3229 SW Mary St., Lee's Summit, Missouri*

Project Title:
*The OXFORD 4*

General Contractor:
*Bellah Homes, LLC*

STATE OF MISSOURI
DENNIS HEIER
NUMBER PE-2011001172
PROFESSIONAL ENGINEER
2/11/2020

Date: 2 - 11 - AD 2020
Rev. 1:
Rev. 2:
Rev. 3:

Sheet Title:
**ROOF PLAN**

Sheet No.:
**A-2** of 5

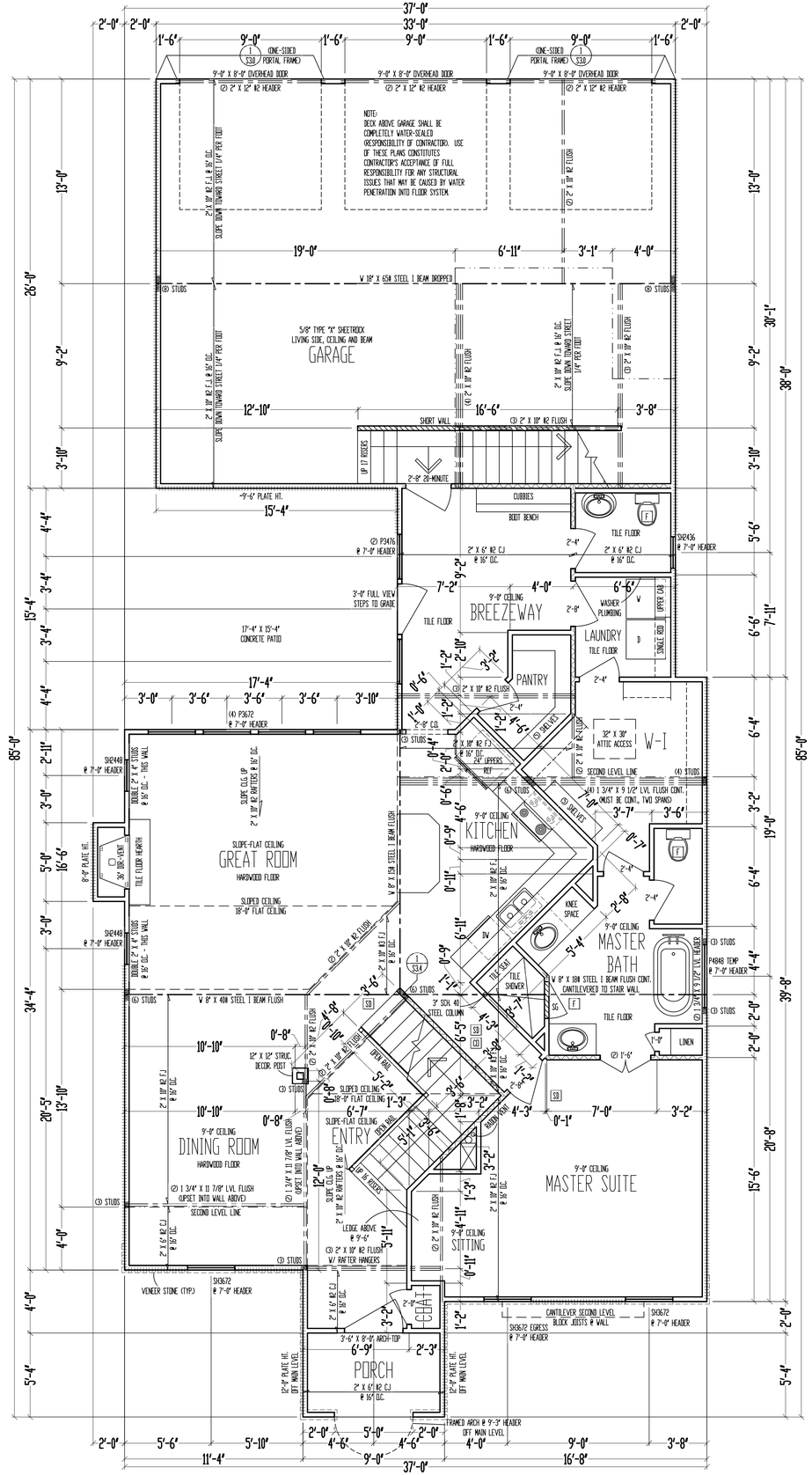


9'-0" CEILING
2" X 10" FLOOR SYSTEM

# MAIN LEVEL

SCALE: 1/4" = 1'-0"

MAIN LEVEL: 1695 SQ. FT.
SECOND LEVEL: 851 SQ. FT.
TOTAL: 2546 SQ. FT.

ROOFTOP DECK: 691 SQ. FT.
GARAGE TOWER: 168 SQ. FT.
GARAGE: 853 SQ. FT.
UNFIN. BASEMENT: 1445 SQ. FT.

++++++++++++++++++++ = WALL BRACING PER FRAMING NOTE #1 AND PER CALCULATIONS ON SHEET S1.0

FRAMING NOTES:
1. MAIN LEVEL EXTERIOR WALLS SHALL BE SHEATHED W/ 7/16" O.S.B. APA PANELS W/ 8d COMMON NAILS @ 2" O.C. AT EDGES & @ 12" O.C. IN THE FIELD. SMART PANEL, OR EQUAL, INSTALLED PER MANUFACTURER'S SPECIFICATIONS.
2. \ \ \ \ \ \ \ \ \ \ \ \ = G.B.: 1/2" MIN. GYPSUM BOARD OVER STUDS SPACED 24" MAX FASTENED W/ NIL 6 - 1 1/4" TYPE W OR S DRYWALL SCREWS @ 7" O.C. EDGES & FIELD. MIN. 8'-0" SECTIONS ONE SIDE OF WALL (8') MIN. 4'-0" SECTION FOR BOTH SIDES)
3. /\/\/\/\/\/\/\/\/\/\ = LOAD BEARING INTERIOR WALL.
4. (2) 2" X 10" #2 HEADER AT ALL EXTERIOR AND LOAD BEARING WALLS, UNLESS NOTED OTHERWISE.
5. LOW TIES @ 4'-0" O.C. (TYPICAL)
6. RUN STUBS THE FULL HEIGHT OF RAISED PLATE WALLS.
7. BLOCK JOISTS ABOVE BEAMS, CANTILEVERS AND LOAD BEARING WALLS WITH JOIST MATERIAL (NOT REQUIRED WITH I-JOISTS).
8. PROVIDE MULTIPLE STUDS FOR SOLID BEARING BELOW ALL BEAMS.
9. ALL DESIGNATED 2" X 6" WALLS SHALL HAVE DOUBLE KING STUDS AT DOOR AND WINDOW OPENINGS.
10. ALL UNSQUARE WALLS SHALL BE 45°, UNLESS NOTED OTHERWISE.
11. ALL WALLS TO BE FRAMED W/ MIN. STUD GRADE 2" X 4"S @ 16" O.C., UNLESS NOTED OTHERWISE.
12. EXTERIOR WALL BOTTOM PLATES SHALL BE NAILED TO FRAMING BELOW WITH 16d COMMON NAILS @ 8" O.C. MAX. (WHERE APPLICABLE)

These plans and specifications are protected under federal copyright laws. Copyright A.D. 2019 Bellah Homes, LLC:

Care and effort have gone into the creation and design of this plan. However, the designer is not an architect or engineer and construction from these plans should not be undertaken without prior review of construction drawings by a licensed architect or engineer. Because of the impossibility of any on site consultation and supervision, Viewpoint Residential Design, LLC. and Designer assume no responsibility for any damages, including but not limited to, structural deficiencies, incorrect dimensions, errors or omissions in these blueprints. Also, site conditions may vary from those illustrated on this plan. Designer does not warrant the suitability of these plans for use on your specific site. Consult your architect to determine the suitability of these plans for your specific site and application.

*"For God so loved the world, that he gave his only begotten Son, that whosoever believeth in him should not perish, but have everlasting life" (John 3:16).*

VIEWPOINT RESIDENTIAL DESIGN, LLC

Bellah Homes
12272 SW Arborcrest Cir.
Lee's Summit, MO
O: (816)697-2870
www.BellahHomes.com

Bellah HOMES

Site Description:
*Lot 101, Pergola Park, New Longview*

Street Address:
*3229 SW Mary St., Lee's Summit, Missouri*

Project Title:
*The OXFORD 4*

General Contractor:
*Bellah Homes, LLC*

STATE OF MISSOURI
DENNIS HEIER
NUMBER PE-2001024972
PROFESSIONAL ENGINEER
2/12/2020

Date: 2 - 11 - AD 2020
Rev. 1:
Rev. 2:
Rev. 3:

Sheet Title:
**MAIN LEVEL PLAN**

Sheet No.:
**A-3** of 5

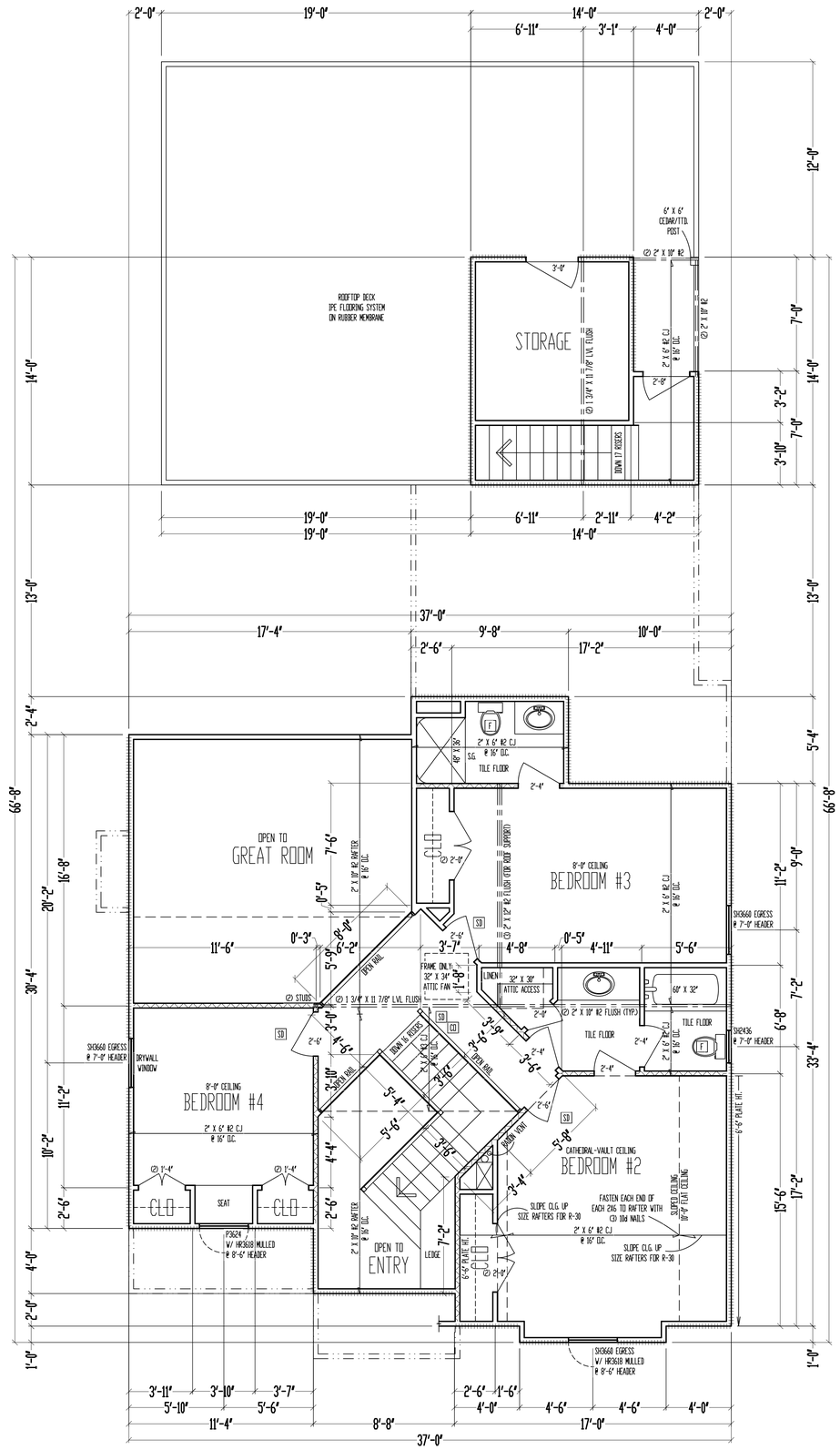


8'-0" CEILING

# SECOND LEVEL

SCALE: 1/4" = 1'-0"

++++++++++++++++++++ = WALL BRACING PER FRAMING NOTE #1 AND PER CALCULATIONS ON SHEET S1.1.

FRAMING NOTES:

1. SECOND LEVEL EXTERIOR WALLS SHALL BE SHEATHED W/ 7/16" O.S.B. APA PANELS W/ 8d COMMON NAILS @ 6" O.C. AT EDGES & @ 12" O.C. IN THE FIELD. SMART PANEL, OR EQUAL, INSTALLED PER MANUFACTURER'S SPECIFICATIONS.
2. \ \ \ \ \ \ \ \ \ \ \ = G.B. 1/2" MIN. GYPSUM BOARD OVER STUDS SPACED 24" MAX FASTENED W/ NO. 6 - 1 1/4" TYPE W OR S DRYWALL SCREWS @ 7" O.C. EDGES & FIELD. (MIN. 8'-0" SECTIONS ONE SIDE OF WALL (OR) MIN. 4'-0" SECTION FOR BOTH SIDES)
3. /\/\/\/\/\/\/\/\ = LOAD BEARING INTERIOR WALL.
4. (2) 2" X 10" R2 HEADER AT ALL EXTERIOR AND LOAD BEARING WALLS, UNLESS NOTED OTHERWISE.
5. LOW TIES @ 4'-0" O.C. (TYPICAL)
6. RUN STUDS THE FULL HEIGHT OF RAISED PLATE WALLS.
7. BLOCK JOISTS ABOVE BEAMS, CANTILEVERS AND LOAD BEARING WALLS WITH JOIST MATERIAL (NOT REQUIRED WITH I-JOISTS).
8. PROVIDE MULTIPLE STUDS FOR SOLID BEARING BELOW ALL BEAMS.
9. ALL DESIGNATED 2" X 6" WALLS SHALL HAVE DOUBLE KING STUDS AT DOOR AND WINDOW OPENINGS.
10. ALL UNSQUARE WALLS SHALL BE 45°, UNLESS NOTED OTHERWISE.
11. ALL WALLS TO BE FRAMED W/ MIN. STUD GRADE 2" X 4"S @ 16" O.C., UNLESS NOTED OTHERWISE.
12. EXTERIOR WALL BOTTOM PLATES SHALL BE NAILED TO FRAMING BELOW WITH 16d COMMON NAILS @ 16" O.C. MAX (WHERE APPLICABLE.)

These plans and specifications are protected under federal copyright laws. Copyright A.D. 2019 Bellah Homes, LLC.

Care and effort have gone into the creation and design of this plan. However, the designer is not an architect or engineer and construction from these plans should not be undertaken without the assistance of a construction professional, architect or engineer. Because of the impossibility of any on site consultation and supervision, Viewpoint Residential Design, LLC. and Designer assume no responsibility for any damages, including but not limited to, direct or indirect damages, incurred in the use of the plans or blueprints. Also, site conditions may vary from those illustrated on this plan. Designer does not warrant the suitability of these plans for use on your specific site. Consult your architect to determine the suitability of these plans for your specific site and application.

*"For God so loved the world, that he gave his only begotten Son, that whosoever believeth in him should not perish, but have everlasting life"* (John 3:16).

VIEWPOINT RESIDENTIAL DESIGN, LLC

Bellah Homes
1272 SW Arborcrest Cir.
Lee's Summit, MO
O: (816)697-2870
www.BellahHomes.com

Bellah HOMES

Site Description:
*Lot 101, Pergola Park, New Longview*

Street Address:
*3229 SW Mary St., Lee's Summit, Missouri*

Project Title:
***The OXFORD 4***

General Contractor:
*Bellah Homes, LLC*

STATE OF MISSOURI
DENNIS HEIER
NUMBER
PE-2001004172
PROFESSIONAL ENGINEER
2/12/2020

Date: 2 - 11 - AD 2020
Rev. 1:
Rev. 2:
Rev. 3:

Sheet Title:
**SECOND LEVEL PLAN**

Sheet No.:
**A-4** of 5

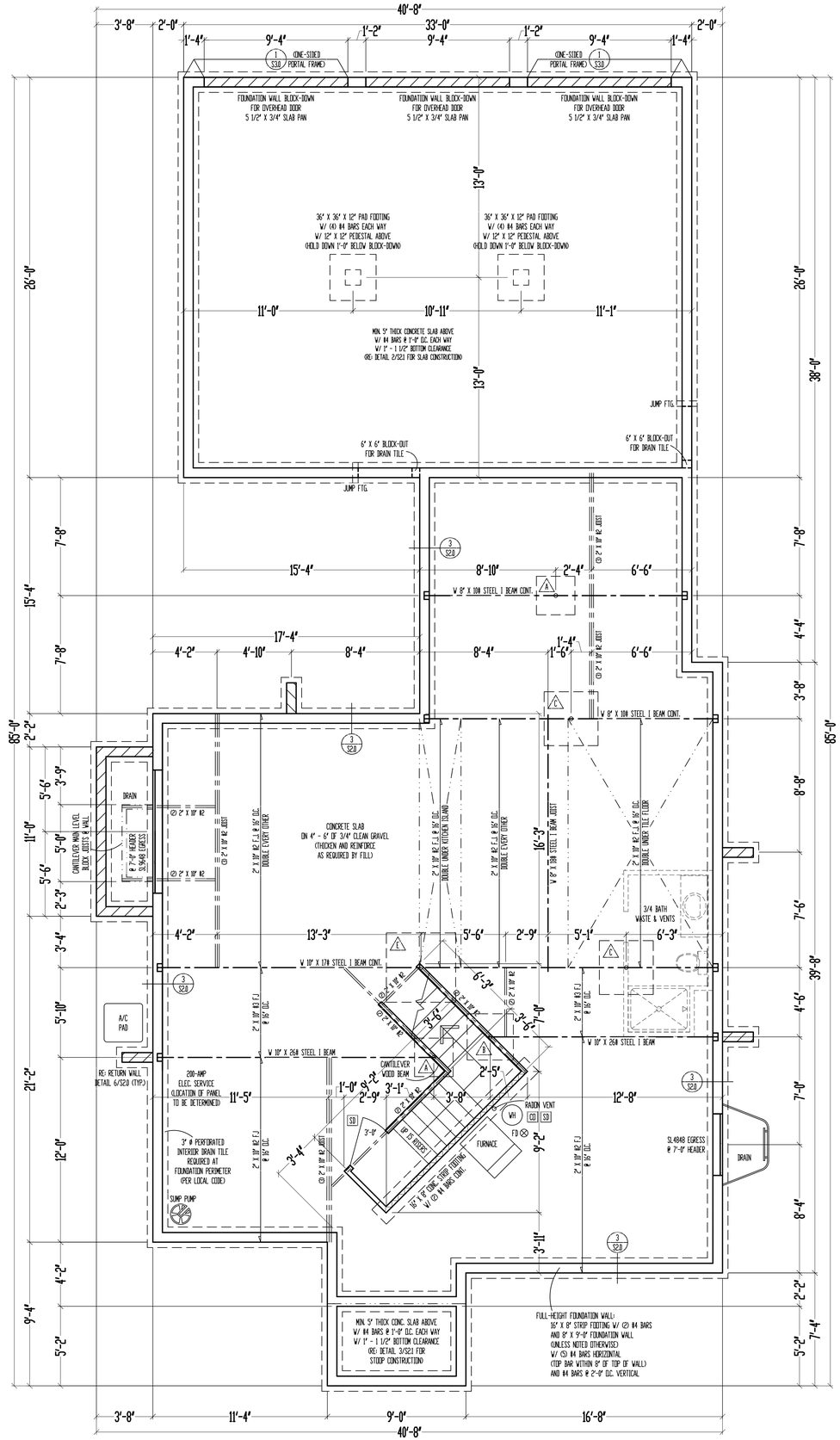


| FLATWORK AREA | |
|---|---|
| LOCATION | SQ. FT. |
| BASEMENT | 1517 |
| GARAGE | 894 |
| PORCH STOOP | 52 |
| PATIO | 266 |

9'-0" FOUNDATION WALLS
(UNLESS NOTED OTHERWISE)
ON 16" X 8" STRIP FOOTINGS
(STEP WHERE GRADE REQUIRES)

2" X 10" FLOOR SYSTEM

# FOUNDATION

SCALE: 1/4" = 1'-0"

********** = WALL BRACING PER FRAMING NOTE #1 AND PER CALCULATIONS ON SHEET S1.1

FRAMING NOTES:
1. BASEMENT LEVEL EXTERIOR WOOD-FRAMED WALLS SHALL BE SHEATHED W/ 7/16" OSB APA PANELS W/ 8d COMMON NAILS @ 6" O.C. AT EDGES & @ 12" O.C. IN THE FIELD. SMART PANEL, OR EQUAL, INSTALLED PER MANUFACTURER'S SPECIFICATIONS.
2. \ \ \ \ \ \ \ \ \ \ \ \ = G.B. 1/2" MIN. GYPSUM BOARD OVER STUDS SPACED 24" MAX FASTENED W/ NO. 6 - 1 1/4" TYPE V DR S DRYWALL SCREWS @ 7" O.C. EDGES & FIELD. (MIN. 8'-0" SECTIONS ONE SIDE OF WALL (30) MIN. 4'-0" SECTION FOR BOTH SIDES)
3. /\/\/\/\/\/\/\/\/\/\/\ = LOAD BEARING INTERIOR WALL.
4. (2) 2" X 10" #2 HEADER AT ALL EXTERIOR AND LOAD BEARING WALLS, UNLESS NOTED OTHERWISE.
5. LOW TIES @ 4'-0" O.C. (TYPICAL)
6. RUN STUDS THE FULL HEIGHT OF RAISED PLATE WALLS.
7. BLOCK JOISTS ABOVE BEAMS, CANTILEVERS AND LOAD BEARING WALLS WITH JOIST MATERIAL (NOT REQUIRED WITH I-JOISTS).
8. PROVIDE MULTIPLE STUDS FOR SOLID BEARING BELOW ALL BEAMS.
9. ALL DESIGNATED 2" X 6" WALLS SHALL HAVE DOUBLE KING STUDS AT DOOR AND WINDOW OPENINGS.
10. ALL UNSQUARE WALLS SHALL BE 45°, UNLESS NOTED OTHERWISE.
11. ALL WALLS TO BE FRAMED W/ MIN. STUD GRADE 2" X 4"S @ 16" O.C., UNLESS NOTED OTHERWISE.
12. 1/2" Ø ANCHOR BOLTS W/ MIN. 7" EMBEDMENT @ 48" O.C. MAX. & WITHIN 6" - 12" OF END OF EACH PLATE LENGTH.
13. NEW FOUNDATION SHALL BEAR ON ORIGINAL SOIL WITH MINIMUM BEARING CAPACITY OF 1500 PSF. A GEOTECHNICAL ENGINEER IS RECOMMENDED FOR VERIFICATION OF THESE CONDITIONS DURING THE EXCAVATION PHASE. ENGINEER OF RECORD ASSUMES NO RESPONSIBILITY FOR CONSTRUCTION NOT VERIFIED TO BE FOUNDED ON ANYTHING SHORT OF THE AFOREMENTIONED REQUIREMENTS.

| STEEL COLUMN & PAD FOOTING SCHEDULE | |
|---|---|
| A | 3" X 11 GA. STEEL COLUMN ON 38" X 38" X 12" PAD FOOTING W/ (5) #4 BARS EACH WAY (12.5k) |
| B | 3 1/2" X 11 GA. STEEL COLUMN ON 36" X 36" X 12" PAD FOOTING W/ (6) #4 BARS EACH WAY (18.0k) |
| C | 3" SCH. 40 STEEL COLUMN ON 42" X 42" X 14" PAD FOOTING W/ (7) #4 BARS EACH WAY (24.5k) |
| D | 3 1/2" SCH. 40 STEEL COLUMN ON 48" X 48" X 16" PAD FOOTING W/ (8) #4 BARS EACH WAY (32.0k) |
| E | 3 1/2" SCH. 40 STEEL COLUMN ON 54" X 54" X 16" PAD FOOTING W/ (9) #4 BARS EACH WAY (40.5k) |
| F | 3 1/2" SCH. 40 STEEL COLUMN ON 60" X 60" X 18" PAD FOOTING W/ (10) #4 BARS EACH WAY (50.0k) |

These plans and specifications are protected under federal copyright laws. Copyright A.D. 2019 Bellah Homes, LLC:

Care and effort have gone into the creation and design of this plan. However, the designer is not an architect or engineer and construction from these plans should not be undertaken without the supervision of a competent architect and/or engineer. Because of the impossibility of any on site consultation and supervision, Viewpoint Residential Design, LLC. and Designer assume no responsibility for any damages, resulting from the use of these plans in construction of any structure illustrated on these blueprints. Also, site conditions may vary from those illustrated on this plan. Designer does not warrant the suitability of these plans for use on your specific site. Consult your architect to determine the suitability of these plans for your specific site and application.

*"For God so loved the world, that he gave his only begotten Son, that whosoever believeth in him should not perish, but have everlasting life" (John 3:16).*

VIEWPOINT RESIDENTIAL DESIGN, LLC

Bellah Homes
1272 SW Arborcrest Cir.
Lee's Summit, MO
O: (816)697-2870
www.BellahHomes.com

Bellah HOMES

Site Description:
*Lot 101, Pergola Park, New Longview*

Street Address:
*3229 SW Mary St., Lee's Summit, Missouri*

Project Title:
***The OXFORD 4***

General Contractor:
***Bellah Homes, LLC***

STATE OF MISSOURI
DENNIS HEIER
NUMBER PE-2004004972
PROFESSIONAL ENGINEER
2/11/2020

Date: 2 - 11 - AD 2020
Rev. 1:
Rev. 2:
Rev. 3:

Sheet Title:
**FOUNDATION PLAN**

Sheet No.:
**A-5** of 5

| FASTENER SCHEDULE FOR STRUCTURAL MEMBERS | | |
|---|---|---|
| DESCRIPTION OF BUILDING ELEMENTS | NUMBER AND TYPE OF FASTENER | SPACING OF FASTENERS |
| **ROOF** [1] | | |
| BLOCKING BETWEEN JOISTS OR RAFTERS TO TOP PLATE, TOE NAIL | 3-8d (2½" x 0.113") | - |
| CEILING JOISTS TO PLATE, TOE NAIL | 3-8d (2½" x 0.113") | - |
| CEILING JOISTS NOT ATTACHED TO PARALLEL RAFTER, LAPS OVER PARTITIONS, FACE NAIL | 3-10d | - |
| COLLAR TIE TO RAFTER, FACE NAIL OR 1¼" x 20 GAGE RIDGE STRAP | 3-10d (3" x 0.128") | - |
| RAFTER OR ROOF TRUSS TO PLATE, TOE NAIL | 3-16d BOX NAILS (3½" x 0.135") OR 3-10d COMMON NAILS (3" x 0.148") | 2 TOE NAILS ON ONE SIDE AND 1 TOE NAIL ON OPPOSITE SIDE OF EACH RAFTER OR TRUSS |
| ROOF RAFTERS TO RIDGE, VALLEY, OR HIP RAFTERS: TOE NAIL FACE NAIL | 4-16d (3½" x 0.135"), 3-16d (3½" x 0.135") | - |
| **WALL** [1] | | |
| BUILT-UP STUDS - FACE NAIL | 10d (3" x 0.128") | 24" O.C. |
| ABUTTING STUDS AT INTERSECTING WALL CORNERS, FACE NAIL | 16d (3½" x 0.135") | 12" O.C. |
| BUILT-UP HEADER, TWO PIECES WITH ½" SPACER | 16d (3½" x 0.135") | 16" O.C. ALONG EACH EDGE |
| CONTINUED HEADER, TWO PIECES | 16d (3½" x 0.135") | 16" O.C. ALONG EACH EDGE |
| CONTINUOUS HEADER TO STUD, TOE NAIL | 4-8d (2½" x 0.113") | - |
| DOUBLE STUDS, FACE NAIL | 10d (3" x 0.128") | 24" O.C. |
| DOUBLE TOP PLATES, FACE NAIL | 10d (3" x 0.128") | 24" O.C. |
| DOUBLE TOP PLATES, MINIMUM 24-INCH OFFSET OF END JOINTS, FACE NAIL IN LAPPED AREA | 8-16d (3½" x 0.135") | - |
| SOLE PLATE TO JOIST OR BLOCKING, FACE NAIL | 16d (3½" x 0.135") | 16" O.C. |
| SOLE PLATE TO JOIST OR BLOCKING AT BRACED WALL PANELS | 3-16d (3½" x 0.135") | 16" O.C. |
| STUD TO SOLE PLATE, TOE NAIL | 3-8d (2½" x 0.113") OR 2-16d (3½" x 0.135") | - |
| TOP OR SOLE PLATE TO STUD, END NAIL | 2-16d (3½" x 0.135") | - |
| TOP PLATES, LAPS AT CORNERS AND INTERSECTIONS, FACE NAIL | 2-10d (3" x 0.128") | - |
| 1" BRACE TO EACH STUD AND PLATE, FACE NAIL | 2-8d (2½" x 0.113") | - |
| 1"x6" SHEATHING TO EACH BEARING, FACE NAIL | 2-8d (2½" x 0.113") | - |
| 1"x8" SHEATHING TO EACH BEARING, FACE NAIL | 2-8d (2½" x 0.113") | - |
| WIDER THAN 1"x8" SHEATHING TO EACH BEARING, FACE NAIL | 3-8d (2½" x 0.113") | - |
| **FLOOR** [1] | | |
| JOIST TO SILL OR GIRDER, TOE NAIL | 3-8d (2½" x 0.113") | - |
| RIM JOIST TO TOP PLATE, TOE NAIL (ROOF APPLICATIONS ALSO) | 8d (2½" x 0.113" | 6" O.C. |
| RIM JOIST OR BLOCKING TO SILL PLATE, TOE NAIL | 8d (2½" x 0.113") | 6" O.C. |
| 1"x6" SUBFLOOR OR LESS TO EACH JOIST, FACE NAIL | 2-8d (2½" x 0.113") | - |
| 2" SUBFLOOR TO JOIST OR GIRDER, BLIND AND FACE NAIL | 2-16d (3½" x 0.135") | - |
| 2" PLANKS (PLANK AND BEAM - FLOOR AND ROOF) | 2-16d (3½" x 0.135") | AT EACH BEARING |
| BUILT-UP GIRDERS AND BEAMS, 2-INCH LUMBER LAYERS | 10d (3" x 0.128") | NAIL EACH LAYER AS FOLLOWS: 32" O.C. AT TOP AND BOTTOM AND STAGGERED. TWO NAILS AT ENDS AND AT EACH SPLICE |
| LEDGER STRIP SUPPORTING JOISTS OR RAFTERS | 3-16d (3½" x 0.135") | AT EACH JOIST OR RAFTER |

| FASTNER SCHEDULE FOR STRUCTURAL MEMBERS | | | |
|---|---|---|---|
| DESCRIPTION OF BUILDING MATERIALS | DESCRIPTION OF FASTENER | EDGE SPACING (INCHES) | INTERMEDIATE SUPPORTS (INCHES) |
| **WOOD STRUCTURAL PANELS, SUBFLOOR, ROOF AND INTERIOR WALL SHEATHING TO FRAMING AND PARTICLEBOARD WALL SHEATHING TO FRAMING** [1] | | | |
| ⅜" - ½" | 6d COMMON (2" x 0.113") NAIL (SUBFLOOR, WALL) 8d COMMON NAIL (ROOF) | 6 | 12 |
| 19/32" - 1" | 8d COMMON NAIL (2½" x 0.131") | 6 | 12 |
| 1⅛" - 1¼" | 10d COMMON (3" x 0.148") NAIL OR 8d (2½" x 0.131") DEFORMED NAIL | 6 | 12 |
| **OTHER WALL SHEATHING** [1] | | | |
| ½" GYPSUM SHEATHING | 1½" GALVANIZED ROOFING NAIL; STAPLE GALVANIZED, 1½" LONG; 1¼" SCREWS, TYPE W OR S | 7 | 7 |
| ⅝" GYPSUM SHEATHING | 1¾" GALVANIZED ROOFING NAIL; STAPLE GALVANIZED, 1⅝" LONG; 1⅝" SCREWS, TYPE W OR S | 7 | 7 |
| **WOOD STRUCTURAL PANELS, COMBINATION SUBFLOOR UNDERLAYMENT TO FRAMING** [1] | | | |
| ¾" AND LESS | 6d DEFORMED (2" x 0.120") NAIL OR 8d COMMON (2½" x 0.131") NAIL | 6 | 12 |
| ⅞" - 1" | 8d COMMON (2½" x 0.131") NAIL OR 8d DEFORMED (2½" x 0.120") NAIL | 6 | 12 |
| 1⅛" - 1¼" | 10d COMMON (3" x 0.148") NAIL OR 8d DEFORMED (2½" x 0.120") NAIL | 6 | 12 |

1. IF INFORMATION LISTED ON PLAN SHEETS CONTRADICTS INFORMATION IN THIS TABLE, INFORMATION ON PLANS TAKES PRECEDENCE OVER INFORMATION LISTED IN THIS TABLE

## FOUNDATION NOTES

1. CONCRETE SHALL BE AIR-ENTRAINED BETWEEN 5%-7% WITH A MINIMUM 28-DAY COMPRESSIVE STRENGTH OF 2500 PSI FOR BASEMENT AND INTERIOR FLOOR SLABS-ON-GRADE, 3000 PSI FOR FOUNDATION WALLS, AND 3500 PSI FOR PORCHES AND GARAGE FLOOR SLABS
2. THE FOUNDATION DESIGN SHALL COMPLY WITH THE ENFORCING JURISDICTION'S RESIDENTIAL FOUNDATION STANDARDS
3. PROVIDE A MINIMUM 4"-DIAMETER PERFORATED DRAIN PIPE ALONG PERIMETER OF USABLE SPACE AT FOOTING LEVEL OR OTHER EQUIVALENT MATERIALS PER IRC SECTION R405.1. THE PIPE SHALL BE COVERED WITH A MINIMUM OF 6" OF GRAVEL OR CRUSHED ROCK. THE DRAIN SHALL DAYLIGHT BELOW FOOTING LEVEL OR TERMINATE IN A MINIMUM 20 GALLON SUMP PIT.
4. FOUNDATION SHALL BE DESIGNED FOR A BEARING CAPACITY OF 1500 PSF AND FOUNDED ON COMPETENT ORIGINAL SOIL AS DETERMINED AND CONFIRMED BY A LICENSED GEOTECHNICAL ENGINEER OR ENGINEERING GEOLOGIST. ENGINEER OF RECORD ASSUMES NO RESPONSIBILITY FOR CONSTRUCTION NOT VERIFIED TO BE FOUNDED ON ANY SOIL WITH THE AFOREMENTIONED MINIMUM PROPERTIES.
5. FOOTINGS SHALL BE A MINIMUM OF 16" WIDE x 8" DEEP AND SHALL HAVE A MINIMUM OF (2) CONTINUOUS GRADE 40 #4 BARS WITH 3" BOTTOM CLERANCE. BOTTOM OF FOOTING SHALL BE LOCATED A MINIMUM OF 3'-0" BELOW GRADE FOR FROST PROTECTION.
6. CONCRETE PADS SUP0PORTING COLUMN LOADS SHALL BE NO SMALLER THAN 2'-0" x 2'-0" x 1'-0" DEEP WITH A MINIMUM OF (4) GRADE 40 #4 BARS EACH WAY WITH 3" BOTTOM CLEARANCE
7. FOUNDATION WALLS SHALL BE A MINIMUM OF 8" NOMINAL WIDTH AND SHALL HAVE HOIZONTAL GRADE 40 #4 BARS AT 2'-0" O.C. MAX. WITH VERTICAL #4 BARS AS REQUIRED ON FOUNDATION CROSS SECTION ON SHEET S2.0
8. REINFORCEMENT SHALL LAP A MINIMUM OF 2'-0" (CLASS B SPLICE)
9. INTERIOR BEARING WALLS AND COLUMNS SHALL BE ISOLATED FROM THE BASEMENT FLOOR SLAB
10. BASEMENT FLOOR SLAB SHALL BE A MINIMUM OF 4" THICK ON A MINIMUM BASE COURSE OF 4" TO 6" OF SAND, GRAVEL OR CRUSHED ROCK. BETWEEN THE BASE COURSE AND FLOOR SLAB SHALL BE PLACED A 6-MIL POLY VAPOR RETARDER WITH MINIMUM OVERLAP OF 6" AT DISCONTINUITIES
11. IF A FLOOR IS TO BE SUPPORTED BY A MINIMUM OF 2'-0" OF GRANULAR FILL OR 8" OF EARTH, BASEMENT SLAB SHALL BE DESIGNED BY A LICENSED ENGINEER
12. SILL PLATES SHALL BE ANCHORED TO THE FOUNDATION WALL WITH ½" Ø ANCHOR BOLTS EMBEDDED A MINIMUM OF 7" INTO CENTER OF WALL STEM AND SHALL BE INSTALLED AT A MAXIMUM OF 6'-0" O.C. (OR AS NOTED ON PLANS) AND SHALL BE INSTALLED WITHIN 6" TO 12" OF EACH END OF EACH SILL PLATE LENGTH, PER IRC SECTION R403.1.6
13. FOUNDATION WINDOW WELLS SHALL BE PROVIDED WITH MINIMUM DIMENSIONS AS SHOWN IN DETAIL ON SHEET S2.0
14. THE GARAGE FLOOR SHALL SLOPE TOWARD THE VEHICLE DOORS OR TO A TRENCH OR UNTRAPPED DRAIN THAT DISCHARGES TO THE EXTERIOR, ABOVE GRADE

## FRAMING NOTES

15. ALL DIMENSIONAL LUMBER SHALL BE DOUGLAS-FIR-LARCH GRADE #2, UNLESS NOTED OTHERWISE ON PLANS
16. ALL INTERIOR LOAD-BEARING AND EXTERIOR WALL HEADERS SHALL BE (2) #2 - 2x10's, UNLESS NOTED OTHERWISE ON PLANS
17. BLOCK OVER BEAMS AND AT CANTILEVERS AND DOOR JAMBS
18. INTERIOR NON-BEARING WALLS RESTING ON BASEMENT SLAB SHALL BE ISOLATED FROM ABOVE FRAMING BY A MINIMUM OF ½"
19. ALL HEADERS/BEAMS SHALL BEAR ON A MINIMUM OF (2) 2x4 POSTS (KING AND JACK STUDS), UNLESS NOTED OTHERWISE
20. WHERE JOISTS SPAN PARALLEL TO FOUNDATION, BLOCKING SHALL BE PROVIDED IN THE TWO SPACES MOST ADJACENT TO THE FOUNDATION WALL AT 4'-0" O.C. FOR THE PURPOSE OF TRANSFERRING LATERAL FOUNDATION WALL LOAD TO THE FLOOR DIAPHRAGM. FASTEN JOISTS AND BLOCKING TO SILL PLATE WITH (4) 10d NAILS. IF MECHANICAL DUCTWORK IS INSTALLED IN ONE OF THESE FIRST TWO BAYS, FASTEN 2x4's FLAT AT 4'-0" O.C. BETWEEN JOIST(S) AND/OR SILL AND PROVIDE BLOCKING AS PRESCRIBED ABOVE IN THE NEXT TWO JOIST BAYS. SECURE 2x4's TO JOIST(S)/SILL PLATE WITH (4) 10d NAILS.
21. ALL WOOD MATERIAL SUPPORTED ON CONCRETE OR MASONRY SHALL BE TREATED OR OF DECAY-RESISTANT MATERIAL
22. JOISTS UNDER BEARING PARTITIONS ON PLANS HAVE BEEN SIZED TO SUPPORT THE DESIGN LOAD.
23. JOISTS FRAMING INTO THE FACE OF A STEEL OR WOOD BEAM SHALL BE SUPPORTED WITH APPROPRIATE COLD-FORMED STEEL JOIST HANGERS
24. JOISTS FRAMED ON TOP OF STRUCTURAL MEMBER SHALL BE SUPPORTED AT EN DS BY FULL-DEPTH SOLID BLOCKING MIN. 1⅛" IN THICKNESS OR BY FASTENING RIM TO JOISTS PER FASTENING TABLE TO LEFT
25. ALL WALL COVERINGS SHALL COMPLY WITH IRC SECTION R702.3
26. ALL RAFTERS AND COLLAR TIES SHALL COMPLY WITH IRC SECTION R802.3.
27. ALL RAFTERS SHALL HAVE 2x4 COLLAR TIES @ 4'-0" O.C. IN UPPER ⅓ OF VERTICAL DISTANCE BETWEEN CEILING AND ROOF
28. BLOCKING BETWEEN JOISTS UNDER A LOAD-BEARING WALL IS NOT REQUIRED
29. PER IRC SECTION 501.3, BOTTOM OF ALL FLOOR ASSEMBLIES ABOVE UNFINISHED AREAS SHALL BE PROVIDED WITH A ½" GYPSUM BOARD MEMBRANE OR RESIDENTIAL FIRE SPRINKLER SYSTEM WHEN FLOOR SYSTEM IS CONSTRUCTED OF OTHER THAN DIMENSION LUMBER OR STRUCTURAL COMPOSITE LUMBER EQUAL TO OR GREATER THAN 2x10 NOMINAL DIMENSION(WHERE REQUIRED BY ENFORCING JURISDICTION)
30. ENGINEERED LVL's SHALL HAVE MINIMUM PROPERTIES OF Fb = 2600 psi, E=1900 ksi, AND Fv=285 psi
31. ENGINEERED PARALLAMS SHALL HAVE MINIMUM PROPERTIES OF Fb = 2600 psi, E = 2000 ksi, AND Fv = 290 psi
32. COLUMN CONNECTION TO STEEL BEAMS SHALL BE WITH A CLIP POST CAP WITH ALL FOUR TAB EARS BENT AROUND THE BOTTOM FLANGE OF THE BEAM. FOR A BEARING PLATE, FOUR HOLES SHALL BE DRILLED IN THE BOTTOM FLANGE OF THE STEEL BEAM TO MATCH THE HOLE PATTERN OF THE PLATE. ½" x 2" BOLTS SHALL THEN BE INSTALLED WITH A FLAT WASHER, LOCK WASHER, AND A NUT IN EACH OF THE HOLES. THE POST CAP MAY BE WELDED TO THE STEEL BEAM IN ACCORDANCE WITH AWS D1.1-92 AS AN ALTERNATIVE, AND WOULD NEED TO BE INSPECTED BY AN AWS-CERTIFIED INSPECTOR.
33. WHEN MECHANICAL EQUIPMENT IS LOCATED IN AN ENCLOSED ROOM, THERE SHALL BE (2) 14"x12" VENTS LOCATED IN A WALL COMMON WITH ADDITIONAL LIVING AREA. ONE VENT SHALL BE LOCATED SUCH THAT THE BOTTOM OF THE VENT BEGINS 12" FROM THE FLOOR AND THE OTHER VENT SHALL BE LOCATED SUCH THAT THE TOP OF THE VENT BEGINS 12" FROM THE CEILING.
34. ALL ROOF SHEATHING SHALL BE 7/16" OSB WITH 8d COMMON NAILS @ 6" O.C. AT PANEL EDGES AND @ 12" O.C. IN FIELD

## GLAZING NOTES

35. GLAZING IN HAZARDOUS LOCATIONS AS IDENTIFIED IN IRC SECTION R308.4 SHALL BE OF APPROVED SAFETY GLAZING MATERIALS. GLASS IN STORM DOORS, INDIVIDUAL FIXED OR OPENABLE PANELS ADJACENT TO A DOOR WHERE THE NEAREST VERTICAL EDGE IS WITHIN A 2'-0" ARC OF THE DOOR IN A CLOSED POSITION AND FOR WHICH THE BOTTOM EDGE IS WITHIN 5'-0" OF THE FLOOR, WALLS ENCLOSING STAIRWAYS AND LANDINGS WHERE THE GLAZING IS WITHIN 5'-0" OF THE TOP OR BOTTOM OF THE STAIR, ENCLOSURES FOR SPAS, TUBS, SHOWERS, AND WHIRLPOOLS, GLAZING IN FIXED OR OPENABLE PANELS EXCEEDING NINE SQUARE FEET AND FOR WHICH THE BOTTOM EDGE IS LESS THAN 1'-6" ABOVE THE FLOOR OR WALKING SURFACE WITHIN 3'-0"
36. ALL OPERABLE WINDOWS SHALL HAVE FALL PROTECTION PER IRC SECTION R612.2

## ATTIC VENTILATION

37. ENCLOSED ATTICS SHALL HAVE CROSS VENTILATION FOR EACH SEPARATE SPACE BY VENTILATING OPENINGS PROTECTED AGAINST THE ENTRANCE OF RAIN OR SNOW. VENTILATING OPENINGS SHALL BE PROVIDED WITH CORROSION-RESISTANT WIRE MESH, WITH ⅛" TO ¼" OPENINGS. THE TOTAL FREE VENTILATING AREA SHALL NOT BE LESS THAN 1/150 OF THE AREA OF SPACE VENTILATED, EXCEPT WHERE THE VENTILATORS ARE LOCATED IN THE UPPER PORTION OF THE SPACE TO BE VENTILATED - THE REQUIRED AREA MAY BE REDUCED TO 1/300.

## EMERGENCY EGRESS

38. PROVIDE A MINIMUM OF ONE WINDOW FOR EACH BEDROOM THAT HAS A MINIMUM OPENABLE AREA OF 5.7 SQUARE FEET WITH A MINIMUM OPENABLE HEIGHT OF 2'-0" AND A MINIMUM WIDTH OF 1'-9". IN ADDITION, THE OPENABLE PORTION OF EGRESS WINDOWS SHALL NOT EXCEED 3'-8" ABOVE THE ADJOINING FLOOR OR PERMANENT STEP.
39. PROVIDE SMOKE ALARMS IN EACH SLEEPING ROOM, OUTSIDE OF EACH SLEEPING AREA AND ON EACH FLOOR, INCLUDING BASEMENT (IF APPLICABLE). ALARMS SHALL BE HARDWIRED TOGETHER SO THAT THE ACTIVATION OF ONE SMOKE ALARM WILL ACTIVATE ALL SMOKE ALARMS IN THE DWELLING. PROVIDE CARBON MONOXIDE DETECTORS OUTSIDE EACH SLEEPING AREA.

## MASONRY VENEER

40. MASONRY VENEER SHALL BE ANCHORED TO THE SUPPORTING WALL STUDS WITH CORROSION-RESISTANT METAL TIES EMBEDDED IN MORTAR OR GROUT AND EXTENDING INTO THE VENEER A MINIMUM OF 1½", WITH NOT LESS THAN ⅝" MORTAR OR GROUT COVER TO OUTSIDE FACE.
41. VENEER TIES, IF STRAND WIRE, SHALL NOT BE LESS IN THICKNESS THAN NO. 9 U.S. GAGE WIRE AND SHALL HAVE A HOOK EMBEDDED IN THE MORTAR JOINT, OR IF SHEET METAL, SHALL BE NOT LESS THAN NO. 22 U.S. GAGE BY ⅞" CORRUGATED.
42. EACH TIE SHALL SUPPORT NOT MORE THAN 2.67 SQUARE FEET OF WALL AREA AND SHALL BE SPACED NOT MORE THAN 32 INCHES ON CENTER HORIZONTALLY AND 24 INCHES ON CENTER VERTICALLY.
43. VENEER TIES AROUND WALL OPENINGS: ADDITIONAL METAL TIES SHALL BE PROVIDED AROUND ALL WALL OPENINGS GREATER THAN 16 INCHES IN EITHER DIMENSION. METAL TIES AROUND THE PERIMETER OF OPENINGS SHALL BE SPACED NOT MORE THAN 3 FEET ON CENTER AND PLACED WITHIN 12 INCHES OF THE WALL OPENING.

## GARAGE NOTES

44. DOOR(S) BETWEEN THE GARAGE AND DWELLING SHALL BE MINIMUM 1⅜" SOLID CORE OR HONEY-COMBED STEEL DOOR WITH 20-MINUTE FIRE RATING EQUIPPED WITH A SELF-CLOSING DEVICE
45. VEHICLE DOORS AND FRAMES SHALL BE DESIGNED AND INSTALLED TO MEET THE 90-MPH 3-SECOND GUST LOADING PER DASMA 108 AND ASTM E 330-96 PER IRC SECTION R301.2.1

## GARAGE NOTES (CONTINUED)

44. THE GARAGE SHALL BE SEPARATED FROM THE DWELLING AND ITS ATTIC AREAS BY MINIMUM ⅝" GYP. BOARD APPLIED TO THE GARAGE SIDE OF FRAMING. WHERE HABITABLE SPACE OCCURS ABOVE THE GARAGE, THE GARAGE CEILING ASSEMBLY SHALL BE PROTECTED WITH A MINIMUM ⅝" TYPE X GYP. BOARD. WHERE A FLOOR/CEILING SPACE IS PROVIDED ABOVE THE GARAGE COLUMNS AND BEAMS SUPPORTING THE SEPARATION SHALL ALSO BE PROTECTED WITH ⅝" GYP. BOARD.
45. GARAGE DOOR H-FRAME FOR THE ATTACHMENT OF THE TRACK AND COUNTER BALANCE SHALL CONSIST OF THE FOLLOWING: 2x6 VERTICAL JAMBS RUNNING FROM FLOOR TO CEILING AND SHALL BE FASTENED WITH 2½"" x 0.120" NAILS AT 7" O.C. STAGGERED WITH (7) 3¼" x 0.120" NAILS THROUGH THE JAMB INTO THE HEADER. MINIMUM 2x8 HEADER FOR ATTACHMENT OF COUNTER BALANCE SYSTEM.

## DESIGN LOADING (PER TABLE R301.5)

| MINIMUM UNIFORMLY DISTRIBUTED LIVE LOADS (PSF) | | |
|---|---|---|
| USE | LIVE LOAD | DEAD LOAD |
| UNINHABITABLE ATTICS WITHOUT STORAGE | 10 | 10 |
| UNINHABITABLE ATTICS WITH LIMITED STORAGE | 20 | 10 |
| HABITABLE ATTICS AND ATTICS SERVED WITH FIXED STAIRS | 30 | 10 |
| BALCONIES (EXTERIOR) AND DECKS | 40 | 10 [d] |
| FIRE ESCAPES | 40 | 10 |
| GUARDRAILS AND HANDRAILS [a] | 200 [c] | - |
| GUARDRAIL IN-FILL COMPONENTS [b] | 50 [c] | - |
| PASSENGER VEHICLE GARAGES | 50 | DEPENDENT UPON SLAB CONSTRUCTION |
| ROOMS OTHER THAN SLEEPING ROOM | 40 | 10 [d] |
| SLEEPING ROOM | 30 | 10 [d] |
| STAIRS | 40 | 10 [d] |

a. A single concentrated load applied in any direction at any point along the top.
b. Guard in-fill components (all those except the handrail), ballusters and panel fillers shall be designed to withstand a horizontally applied normal load of 50 pounds on an area equal to one square foot. This load need not be assumed to act concurrently with any other live load requirement.
c. Glazing used in handrail assemblies and guards shall be designed with a safety factor of 4. The safety factor shall be applied to each of the concentrated loads applied to the top of the rail, and to the load on the infill components. These loads shall be determined independently of one another, and loads are assumed not to occur with any other live load.
d. An additional dead loading of 10 psf shall be applied where thinset tile floor is to be installed. An additional dead loading of 50 psf shall be applied where mudset tile floor is to be installed.

## INSULATION/EFFICIENCY

1. BUILDING ENVELOPE INSULATION SHALL COMPLY WITH IRC TABLE N1102.1.1 OR THE 2012 IECC (SEE SHEET S3.1 FOR FRAMING DETAILS AND TABLES ON THIS SHEET FOR MORE INFORMATION)
2. CATHEDRAL -VAULTED CEILING FRAMING SHALL BE FRAMED WITH A MINIMUM INSULATION VALUE OF R-38. IF VAULTED RAFTERS DO NOT PROVIDE REQUIRED DEPTH TO ACHIEVE R-38 INSULATION BUILDER SHALL FUR DOWN RAFTERS PER DETAILS PROVIDED ON SHEET S3.1.

| INSULATION AND FENESTRATION REQUIREMENTS BY COMPONENT (TABLE N1102.1.1) | |
|---|---|
| CLIMATE ZONE | 4-A |
| FENESTRATION U-FACTOR | 0.35 |
| SKYLIGHT U-FACTOR | 0.55 |
| GLAZED FENSTRATION SHGC | 0.40 |
| CEILING R-VALUE | 49 |
| WOOD FRAME WALL R-VALUE | 13 |
| MASS WALL R-VALUE | 8 / 13 |
| FLOOR R-VALUE | 19 |
| BASEMENT WALL R-VALUE | 10-CONTINUOUS OR 13-CAVITY |
| SLAB R-VALUE AND DEPTH | 10 AT 2'-0" |
| CRAWL SPACE WALL R-VALUE | 10-CONTINUOUS OR 13-CAVITY |
| DUCTWORK EXPOSED TO OUTSIDE AIR R-VALUE | 8 |
| DUCTWORK NOT EXPOSED TO OUTSIDE AIR R-VALUE | 6 |
| CATHEDRAL VAULTED CEILING R-VALUE | 38 |

## DUCT SEALING

**N1103.2.2 (R403.2.2) SEALING (MANDATORY).** DUCTS, AIR HANDLERS, AND FILTER BOXES SHALL BE SEALED. JOINTS AND SEAMS SHALL COMPLY WITH SECTION M1601.4.1 OF 2012 IRC.

**EXCEPTIONS:**

1. AIR-IMPERMEABLE SPRAY FOAM PRODUCTS SHALL BE PERMITTED TO BE APPLIED WITHOUT ADDITIONAL JOINT SEALS.
2. WHERE A DUCT CONNECTION IS MADE THAT IS PARTIALLY INACCESSIBLE, THREE SCREWS OR RIVETS SHALL BE EQUALLY SPACED ON THE EXPOSED PORTION OF THE JOINT SO AS TO PREVENT A HINGE EFFECT.
3. CONTINUOUSLY WELDED AND LOCKING-TYPE LONGITUDINAL JOINTS AND SEAMS IN DUCTS OPERATING AT STATIC PRESSURES LESS THAN 2 INCHES OF WATER COLUMN PRESSURE CLASSIFICATION SHALL NOT REQUIRE ADDITIONAL CLOSURE SYSTEMS.

DUCT TIGHTNESS SHALL BE VERIFIED BY EITHER OF THE FOLLOWING:

1. POST-CONSTRUCTION TEST: TOTAL LEAKAGE SHALL BE LESS THAN OR EQUAL TO 4 CFM PER 100 SQUARE FEET OF CONDITIONED FLOOR AREA WHEN TESTED AT A PRESSURE DIFFERENTIAL OF 0.1 INCHES W.G. ACROSS THE ENTIRE SYSTEM, INCLUDING THE MANUFACTURER'S AIR HANDLER ENCLOSURE. ALL REGISTER BOOTS SHALL BE TAPED OR OTHERWISE SEALED DURING THE TEST.
2. ROUGH-IN TEST: TOTAL LEAKAGE SHALL BE LESS THAN OR EQUAL TO 4 CFM PER 100 SQUARE FEET OF CONDITIONED FLOOR AREA WHEN TESTED AT A PRESSURE DIFFERENTIAL OF 0.1 INCHES W.G. ACROSS THE SYSTEM, INCLUDING THE MANUFACTURER'S AIR HANDLER ENCLOSURE. ALL REGISTERS SHALL BE TAPED OR OTHERWISE SEALED DURING THE TEST. IF THE AIR HANDLER IS NOT INSTALLED AT THE TIME OF THE TEST, TOTAL LEAKAGE SHALL BE LESS THAN OR EQUAL TO 3 CFM PER 100 SQUARE FEET OF CONDITIONED FLOOR AREA.

**EXCEPTION:** THE TOTAL LEAKAGE TEST IS NOT REQUIRED FOR DUCTS AND AIR HANDLERS LOCATED ENTIRELY WITHIN THE BUILDING THERMAL ENVELOPE.

| MECHANICAL VENTILATION SYSTEM FAN EFFICACY | | | |
|---|---|---|---|
| FAN LOCATION | AIR FLOW RATE MINIMUM (CFM) | MINIMUM EFFICACY (CFM/WATT) | AIR FLOW RATE MAXIMUM (CFM) |
| RANGE HOODS | ANY | 2.8 | ANY |
| IN-LINE FAN | ANY | 2.8 | ANY |
| BATHROOM, UTILITY ROOM | 10 | 1.4 | 90 |
| BATHROOM, UTILITY ROOM | 90 | 2.8 | ANY |


VISTA —STRUCTURAL— ENGINEERING, LLC
14718 NW DELIA STREET ☆ PORTLAND, OREGON 97229
OFFICE: 971.645.0901 ☆ MOBILE: 971.645.0901 ☆
☆ DENNIS@VISTASTRUCTURAL.COM ☆ VISTASTRUCTURAL.COM


CLIENT: BELLA HOMES, LLC
JOB TITLE: THE OXFORD 4
LOT 2, NEW LONGVIEW
LOCATION: LEE'S SUMMIT, MISSOURI

STATE OF MISSOURI
DENNIS HEIER
NUMBER PE-2010001772
PROFESSIONAL ENGINEER
2-12-2020

| NO. | DATE | REVISION | BY |
|---|---|---|---|
| | | | |

DRAWING TITLE
STRUCTURAL NOTES

ENGINEER: DMH | CHECKED BY: DMH
JOB NO. 2375 | DRAWN BY: DMH
DATE: 2-12-2020

SHEET NUMBER
S1.0

# RESIDENTIAL SEISMIC & WIND ANALYSIS

| | | | INPUT |
|---|---|---|---|
| DETERMINE WEIGHT OF HOUSE: | | | CALCULATED VALUE |
| LOCATION | DEAD LOAD (psf) | AREA ($ft^2$) | WEIGHT (lbs.) |
| ROOF | 10 | 2393 | 23930 |
| CEILING | 10 | 2393 | 23930 |
| SECOND FLOOR | 10 | 793 | 7930 |
| FIRST FLOOR | 10 | 2393 | 23930 |
| | WALL LENGTH (ft) | WALL HEIGHT (ft) | WALL UNIT WT. (psf) | WEIGHT (lbs) |
| SECOND FLOOR EXT. WALL DL | 148.66 | 9 | 9 | 12041.46 |
| FIRST FLOOR EXT. WALL DL | 232.5 | 10 | 10 | 23250 |
| | | DEAD LOAD (psf) | AREA (ft2) | WEIGHT (lbs) |
| SECOND FLOOR INT. PARTITION WALL DL | | 6 | 793 | 4758 |
| FIRST FLOOR INT. PARTITION WALL DL | | 6 | 2393 | 14358 |

PROJECTED AREAS (WIND DESIGN PER 115 MPH 3-SECOND GUST, EXPOSURE C AND MEAN ROOF HEIGHT <= 30 FT ASSUMED)

| FRONT-TO-BACK | | | | SIDE-TO-SIDE | | | |
|---|---|---|---|---|---|---|---|
| | AREA | LOAD | | | AREA | LOAD | |
| SLOPED ROOF | 121 | 1029 | | SLOPED ROOF | 481 | 3895 | |
| VERT. ROOF | 149 | 1852 | CUMULATIVE | VERT. ROOF | 66 | 780 | CUMULATIVE |
| 2ND | 370 | 4600 | 7462 | 2ND | 373.3 | 4637 | 9312 |
| 1ST | 407 | 5060 | 12542 | 1ST | 871.75 | 10302 | 19615 |

PRESSURE (PSF) - PER ASCE CH. 6

| | | | | | |
|---|---|---|---|---|---|
| SLOPED ROOF | ZONE B | 9.7 | ZONE C | 11.3 | 2a (FIG. 28.6-1, ASCE7) |
| WALL/VERT. ROOF | ZONE A | 14.2 | ZONE D | 7.7 | 7.4 |
| MEAN ROOF HT., ft | 25 | | | | |

a) If there is a walkout wall to be sheathed, determine tributary wind area and enter here. If no walkout, enter 0 for area.

$q_{z10}=0.00256K_zK_{zt}K_dV^2$ (ASCE7-10 Velocity Pressure) $q_{z10\_ASD}=0.6q_{z10}$ (Design Velocity Pressure for ASD analysis under ASCE7-10 and IRC/IBC 2012)

| | |
|---|---|
| 2ND FLOOR TRIBUTARY WEIGHT | 53880.73 |
| 1ST FLOOR TRIBUTARY WEIGHT | 84214.46 |
| $S_S$ (SITE GROUND MOTION - %g - FROM ASCE7 SEISMIC MAP) | 12.0% |
| $F_a$ (from ASCE7 Table 11.4-1) | 1.6 |
| $S_{DS}$ (= 2/3 * $S_S$ * $F_a$) | 0.128 |
| R (from ASCE7 Table 12.2-1) | 6.5 |

**SEISMIC SHEAR**

| LOCATION | From ASCE7 (Eq. 12.8-1): | **V (= 1.2 * $S_{DS}$ * W / R) (lbs.)** |
|---|---|---|
| 2ND FLOOR | | **1273** |
| 1ST FLOOR | | **1990** |

| Sheathing Location | Min. Sheathing Schedule | Fastening Schedule | Allowable Shear (#/LF) | Code Reference |
|---|---|---|---|---|
| Exterior *(Option #1)* | 7/16" APA Rated Plywood/OSB | 1-1/2" 16ga. Staples w/ 1" penetration@ 3" OC Edges, 8" OC Field For 24" stud spacing, 12" OC Field For 16" stud spacing | 155 | per IBC, Table 2306.3(1) |
| Exterior *(Option #2)* | 7/16" APA Rated Plywood/OSB | 1-1/2" 16ga. Staples w/ 1" penetration@ 4" OC Edges, 8" OC Field For 24" stud spacing, 12" OC Field For 16" stud spacing | 230 | per IBC, Table 2306.3(1) |
| Exterior *(Option #3)* | 7/16" APA Rated Plywood/OSB | 1-1/2" 16ga. Staples w/ 1" penetration@ 3" OC Edges, 8" OC Field For 24" stud spacing, 12" OC Field For 16" stud spacing | 310 | per IBC, Table 2306.3(1) |
| Exterior ***(Option #4)*** | 7/16" APA Rated Plywood/OSB or shiplap panel sheathing, or 3/8" shiplap panel sheathing with tighter nail spacing | 8d Common Nails w/ 1-3/8" penetration @ 6" O.C. Edges, 12" O.C. Field for 7/16" APA-rated plywood/OSB or shiplap panel sheathing OR @ 4" O.C. Edges, 12" O.C. Field for 3/8" shiplap panel sheathing | 220 | AF&PA SDPWS Table 4.3A |
| Exterior ***(Option #5)*** | 7/16" APA Rated Plywood/OSB or shiplap panel sheathing, or 3/8" shiplap panel sheathing with tighter nail spacing | 8d Common Nails w/ 1-3/8" penetration @ 4" O.C. Edges, 12" O.C. Field for 7/16" APA-rated plywood/OSB or shiplap panel sheathing OR @ 3" O.C. Edges, 12" O.C. Field for 3/8" shiplap panel sheathing | 320 | AF&PA SDPWS Table 4.3A |
| Exterior ***(Option #6)*** | 7/16" APA Rated Plywood/OSB or shiplap panel sheathing, or 3/8" shiplap panel sheathing with tighter nail spacing and double studs at each panel edge | 8d Common Nails w/ 1-3/8" penetration @ 3" O.C. Edges, 12" O.C. Field | 410 | AF&PA SDPWS Table 4.3A |
| Interior | 1/2" Gypsum Board | No. 6- $1^1/_4$" Type W or S Screws @ 8" O.C. Edges, 12" O.C. Field | 60 | per IBC, Table 2306.4.4 |
| Interior | 16 Ga. Simpson/USP Type WB Steel X-Brace (or equal) | (3) 16d @ end studs & (1) 8d @ intermediate studs (per manufacturer specifications - see detail on sheet S3) | 325 | |

| | |
|---|---|
| EXTERIOR SHEATHING OPTION FOR SECOND FLOOR | 4 |
| EXTERIOR SHEATHING OPTION FOR FIRST FLOOR | 6 |
| EXTERIOR SHEATHING OPTION FOR BASEMENT WALLS | 4 |

| | |
|---|---|
| WIDTH OF 1ST STORY (FT.) | 37 |
| DEPTH OF 1ST STORY (FT.) | 79.25 |
| BACK WALL OF GARAGE (FT.) | 0 |
| GAR. WALL: 1=F-B, 2=S-S | 2 |

| | |
|---|---|
| WIDTH OF 2ND STORY (FT.) | 37 |
| DEPTH OF 2ND STORY (FT.) | 37.33 |

EXTERIOR STRUCTURAL WALL LENGTHS (ft.) & RESISTANCES

| | SEISMIC | | | | WIND | | | |
|---|---|---|---|---|---|---|---|---|
| | FRONT-TO-BACK | RESISTANCE (lbs.) | SIDE-TO-SIDE | RESISTANCE (lbs.) | FRONT-TO-BACK | RESISTANCE (lbs.) | SIDE-TO-SIDE | RESISTANCE (lbs.) |
| 2ND FLOOR | 53 | 14840 | 50 | 14000 | 53 | 20776 | 50 | 19600 |
| 1ST FLOOR | 77 | 38190 | 32 | 15040 | 77 | 50666 | 32 | 21056 |

| | ADDITIONAL RESISTANCE REQUIRED | |
|---|---|---|
| | SEISMIC | WIND |
| 2ND FLOOR FRONT-TO-BACK | 0 | 0 |
| 2ND FLOOR SIDE-TO-SIDE | 0 | 0 |
| 1ST FLOOR FRONT-TO-BACK | 0 | 0 |
| 1ST FLOOR SIDE-TO-SIDE | 0 | 0 |

| Anchor Bolt Spacing (in.) | |
|---|---|
| diameter (in.) | 0.5 |
| Shear value (per NDS) | 944 |
| Spacing F-B (inches) | 229.1 |
| spacing S-S (inches) | 68.4 |

| 16d Nail Spacing req'd at bottom plate (in.) | |
|---|---|
| 2nd Floor F-B | 57 |
| 2nd Floor S-S | 22 |
| 1st Floor F-B | 34 |
| 1st Floor S-S | 10 |

RESISTANCE REQUIRED IN ADDITION TO RESISTANCE PROVIDED BY EXTERIOR WALLS**

| | ADDITIONAL RESISTANCE REQUIRED (POUNDS) | PORTAL FRAMES OR PERF. SHEAR WALL RESISTANCE | INTERIOR X-BRACES (325#/BRACE) | INTERIOR WALL LENGTH W/ 1/2" GYPSUM BOARD PER TABLE (FT.) | INT. WALL LENGTH SHEATHED W/ OSB (TOTAL LENGTH, ONE SIDE, FT.) | RESISTANCE PROVIDED BY ADDITIONAL METHODS (POUNDS) | OK? |
|---|---|---|---|---|---|---|---|
| 2ND FLOOR FRONT-TO-BACK | 0 | | | | | 0 | YES |
| 2ND FLOOR SIDE-TO-SIDE | 0 | | | | | 0 | YES |
| 1ST FLOOR FRONT-TO-BACK | 0 | | | | | 0 | YES |
| 1ST FLOOR SIDE-TO-SIDE | 0 | | | | | 0 | YES |

**NOTES: 1) SEE ATTACHED CALCULATIONS FOR PORTAL FRAME OR PERFORATED SHEAR WALL RESISTANCE CAPACITIES (IF APPLICABLE),
2) SEE SHEET S1 FOR INTERIOR STEEL X-BRACE INSTALLATION, 3) INTERIOR WALLS SHEATHED WITH OSB SHALL BE ATTACHED WITH SAME STAPLE/NAILING PATTERN AS EXTERIOR OSB ON SAME FLOOR (SEE TABLE ABOVE) AND ARE ONLY APPLICABLE FOR FULL-HEIGHT SECTIONS OF 2'-8" OR LONGER
**ALL LATERAL BRACING ACHIEVED AT EXTERIOR WALLS AND WALLS DIRECTLY ON FOUNDATIONS; THEREFORE, NO INTERIOR BRACING PER 2012 IRC SECTION R502.2.1 IS REQUIRE**

WIND UPLIFT ANALYSIS

| | X/12 | DEGREES | | | | | |
|---|---|---|---|---|---|---|---|
| ROOF PITCH (MAX) | 18 | 56.3 | PITCH OF 6 OR LESS: EOH -13.3, E -7.2, G -5.2 | | | | |
| | | ASCE 7 | | | | | |
| | LENGTH (FT.) | PRESSURE (PSF) | LINEAL FT. OF OH | UPLIFT PER FT* (LBS) | | | |
| OVERHANG | 1 | -1.08 | 234.5 | -1.08 | | | |
| | TOTAL AREA ($FT^2$) | ZONE E AREA ($FT^2$) | ZONE G AREA ($FT^2$) | PRESSURE ZN. E (PSF) | PRESSURE ZN. G (PSF) | TOTAL FORCE (LBS) | FORCE PER LINEAL FT @ PERIMETER (LBS) |
| MAIN ROOF** | 2932.25 | 881.044 | 2051.206 | -1.08 | -0.36 | -1690 | -7.3 |

| | | | |
|---|---|---|---|
| *ALONG PERIMETER | **TOTAL UPLIFT PER LINEAL FOOT ALONG EXTERIOR (POUNDS)** | **-8.3** | UPLIFT OK |
| **INSIDE EXTERIOR WALLS | **RESISTANCE DUE TO DEAD WEIGHT & (3) 10d TOENAILS** | **251.6** | |

**NOTE FOR CONSTRUCTION:**
THE CONTINUOUS STRUCTURAL PANEL SHEATHING BRACING METHOD REQUIRES USE OF THE ABOVE TABLE FOR SHEATHING OF THE ENTIRE STRUCTURE. IN ADDITION, FRAMING MEMBERS SHALL BE @ 16" O.C. MAX., UNBLOCKED, AND W/ SHEATHING APPLIED DIRECTLY TO FRAMING MEMBERS

**NOTE FOR DESIGN:**
ALL WALLS USED IN THE CALCULATION OF THE RESISTANCE FOR THIS STRUCTURE SHALL HAVE A MINIMUM UNINTERRUPTED HEIGHT OF 8'-0" AND LENGTH OF 2'-8". ALLOWABLE RESISTANCES HAVE BEEN #/FT AND INCREASED BY 40% FOR WIND LOADS, PER VALUES IN 2012 IBC SECTION 2306 AND AF&PA SDPWS TABLE 4.3A. FOR EXAMPLE, 7/16" APA-RATED SHEATHING WITH 8d @ 6" & 12" HAS A SEISMIC SHEAR VALUE OF 240 A WIND SHEAR VALUE OF 335#/FT - 40% GREATER THAN THAT OF SEISMIC)

**NOTE: SOIL SITE CLASS ASSUMED TO BE CLASS D. IF SITE CONDITIONS ARE DETERMINED TO BE CLASS E OR F, CONSULT ENGINEER BEFORE PROCEEDING WITH CONSTRUCTION**


VISTA —STRUCTURAL— ENGINEERING, LLC
14718 NW DELIA STREET ☼ PORTLAND, OREGON 97229
OFFICE: 971.645.0901 ☼ MOBILE: 971.645.0901 ☼
☼ DENNIS@VISTASTRUCTURAL.COM ☼ VISTASTRUCTURAL.COM


CLIENT: BELLA HOMES, LLC
JOB TITLE: THE OXFORD 4
LOT 2, NEW LONGVIEW
LOCATION: LEE'S SUMMIT, MISSOURI

STATE OF MISSOURI
DENNIS HEIER
NUMBER PE-2010001772
PROFESSIONAL ENGINEER
2-12-2020

| NO. | DATE | REVISION | BY |
|---|---|---|---|
| | | | |

DRAWING TITLE
STRUCTURAL CALCULATIONS

ENGINEER: DMH CHECKED BY: DMH
JOB NO. 2375 DRAWN BY: DMH
DATE: 2-12-2020
SHEET NUMBER
S1.1

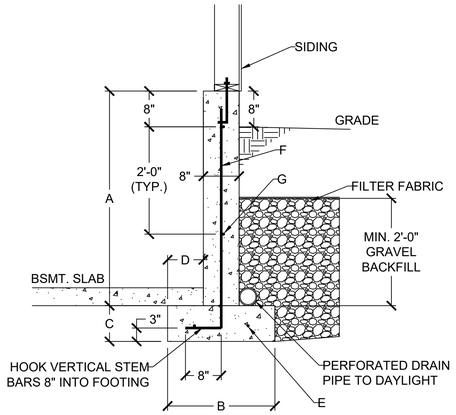


| DAYLIGHT BASEMENT WALL SCHEDULE | | | | | | |
|---|---|---|---|---|---|---|
| A | B | C | D | E | F | G |
| 4'-0" | 1'-6" | 0'-8" | 0'-5" | (2) #4 | #4 VERT. @ 12" O.C. | (2) #4 HORIZ. |
| 5'-0" | 2'-0" | 0'-8" | 0'-7" | (2) #4 | #4 VERT. @ 12" O.C. | (3) #4 HORIZ. |
| 6'-0" | 2'-6" | 0'-8" | 0'-10" | (3) #4 | #4 VERT. @ 12" O.C. | (3) #4 HORIZ. |

1 / S2.0 DAYLIGHT WALL CONSTRUCTION
SCALE: ½" = 1'-0" (18x24) OR ¾" = 1'-0" (24x36)

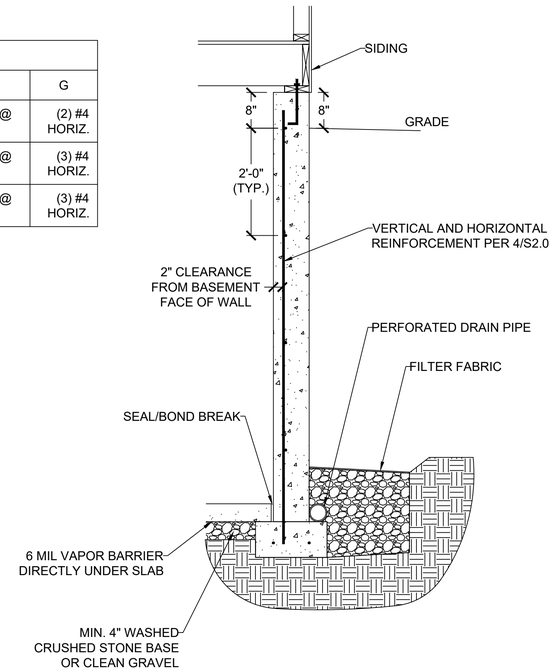


3 / S2.0 CONCRETE WALL SECTION
SCALE: ½" = 1'-0" (18x24) OR ¾" = 1'-0" (24x36)

| VERTICAL REINFORCEMENT SPACING | | | | | | |
|---|---|---|---|---|---|---|
| CONCRETE STRENGTH/GRADE REINFORCEMENT (#4 BARS) | 8" THICK WALL | | | 10" THICK WALL | | |
| | 8' | 9' | 10' | 8' | 9' | 10' |
| 3,000 PSI/ GRADE 40 | 24 | 24 | 16 | 24 | 24 | 18 |
| 3,500 PSI/ GRADE 40 | 24 | 24 | 16 | 24 | 24 | 18 |
| 3,000 PSI/ GRADE 60 | 24 | 24 | 16 | 24 | 24 | 18 |
| 3,500 PSI/ GRADE 60 | 24 | 24 | 16 | 24 | 24 | 18 |
| HORIZONTAL REINFORCEMENT - MINIMUM GRADE 40 STEEL | | | | | | |
| ONE BAR 12" FROM TOP OF WALL; MAX. SPACING 24" OC | 4-#4 | 5-#4 | 6-#4 | 4-#4 | 5-#4 | 6-#4 |

FOOTNOTES:
1) WALL HEIGHT IS MEASURED FROM THE TOP OF THE WALL TO THE TOP OF THE FLOOR SLAB
2) VERTICAL REINFORCEMENT FOR CONCRETE WALLS THAT ARE NOT FULL HEIGHT, AND FOR REINFORCEMENT SPACING 24" OC, REINFORCEMENT MAY BE PLACED IN THE MIDDLE OF THE WALL. OTHER WALLS SHALL HAVE VERTICAL REINFORCEMENT AS FOLLOWS:
   A) 8" WALL - MINIMUM 5" FROM THE OUTSIDE FACE
   B) 10" WALL - MINIMUM 6¾" FROM THE OUTSIDE FACE
   C) EXTEND BARS TO WITHIN 8" OF THE TOP OF THE WALL
3) REINFORCEMENT CLEARANCES:
   A) CONCRETE EXPOSED TO EARTH - MINIMUM 1½"
   B) NOT EXPOSED TO WEATHER (INTERIOR SIDE OF WALLS) -¾"
   C) CONCRETE EXPOSED TO WEATHER (TOP CLEARANCE IN GARAGE AND DRIVEWAY SLABS) - 1½"
4) HORIZONTAL REINFORCEMENT:
   A) ONE BAR SHALL BE PLACED WITHIN 12" OF THE TOP OF THE WALL
   B) OTHER BARS SHALL BE EQUALLY SPACED WITH SPACING NOT TO EXCEED 24" OC
   C) HORIZONTAL BARS SHOULD BE AS CLOSE TO THE TENSION FACE AS POSSIBLE (INTERIOR) AND BEHIND THE VERTICAL REINFORCEMENT (I.E. 2" TOWARD THE INSIDE)
   D) SUPPLEMENTAL REINFORCEMENT AT CORNERS - PLACE (1) #4 BAR 48" LONG AT 45 DEGREE ANGLE AT CORNERS OF OPENINGS. PLACE REINFORCEMENT WITHIN 6" OF THE EDGE OF INSIDE CORNERS.
5) REINFORCEMENT SHALL BE LAPPED A MINIMUM 24" AT ENDS, SPLICES, AND AROUND CORNERS.
6) AT MASONRY LEDGES THE MINIMUM WALL THICKNESS SHALL BE 3½". LEDGES SHALL NOT EXCEED A DEPTH OF MORE THAN 24" BELOW THE TOP OF THE WALL. FOR WALL THICKNESSES LESS THAN 4" PROVIDE #4 BARS AT MAX. 24" OC TO WITHIN 8" OF THE TOP OF THE WALL.
7) STRAIGHT WALLS MORE THAN 5' TALL AND MORE THAN 16 FEET LONG SHALL BE PROVIDED WITH EXTERIOR BRACED RETURN WALLS. WALL LENGTH SHALL BE MEASURED USING INSIDE THE SHORTEST DIMENSION BETWEEN INTERSECTING WALLS

4 / S2.0 FOUNDATION WALL REINFORCEMENT TABLE
NO SCALE

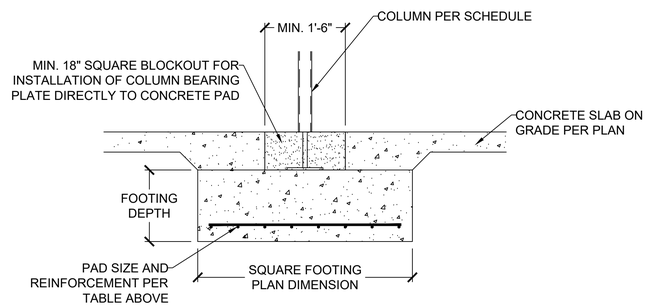


2 / S2.0 COLUMN AND BEARING PAD SCHEDULE
SCALE: ½" = 1'-0" (18x24) OR ¾" = 1'-0" (24x36)

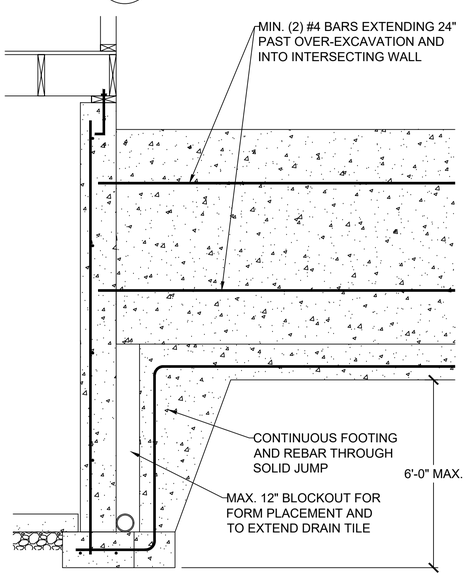


5 / S2.0 SOLID JUMP
SCALE: ½" = 1'-0" (18x24) OR ¾" = 1'-0" (24x36)

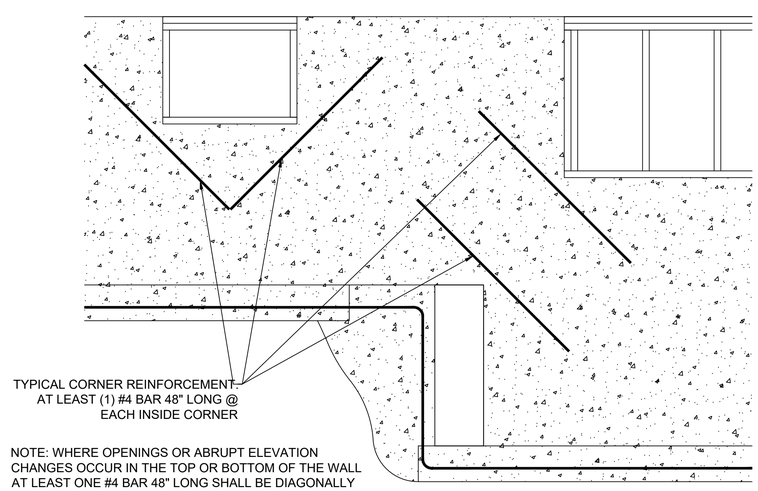


6 / S2.0 REINFORCEMENT AT OPENING CORNERS AND STEP CORNERS @ INSIDE CORNERS
SCALE: ½" = 1'-0" (18x24) OR ¾" = 1'-0" (24x36)

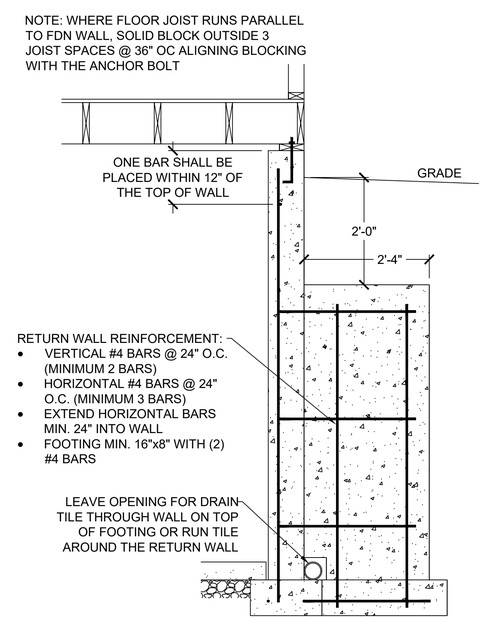


7 / S2.0 RETURN WALL DETAIL
SCALE: ½" = 1'-0" (18x24) OR ¾" = 1'-0" (24x36)

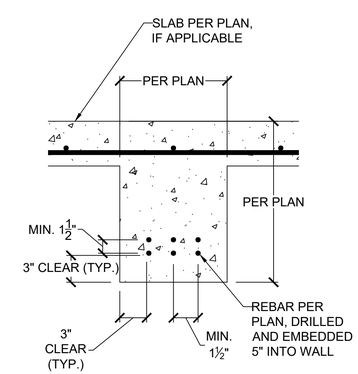


8 / S2.0 CONCRETE GRADE BEAM
SCALE: 1" = 1'-0" (18x24) OR 1½" = 1'-0" (24x36)

VISTA STRUCTURAL ENGINEERING, LLC
14718 NW DELIA STREET ☆ PORTLAND, OREGON 97229
OFFICE: 971.645.0901 ☆ MOBILE: 971.645.0901 ☆
☆ DENNIS@VISTASTRUCTURAL.COM ☆ VISTASTRUCTURAL.COM

CLIENT: BELLA HOMES, LLC
JOB TITLE: THE OXFORD 4
LOT 2, NEW LONGVIEW
LOCATION: LEE'S SUMMIT, MISSOURI

STATE OF MISSOURI
DENNIS HEIER
NUMBER PE-2011001972
PROFESSIONAL ENGINEER
2-12-2020

| NO. | DATE | REVISION | BY |
|---|---|---|---|
| | | | |

DRAWING TITLE
FOUNDATION DETAILS

ENGINEER: DMH | CHECKED BY: DMH
JOB NO. 2375 | DRAWN BY: DMH
DATE: 2-12-2020
SHEET NUMBER
S2.0

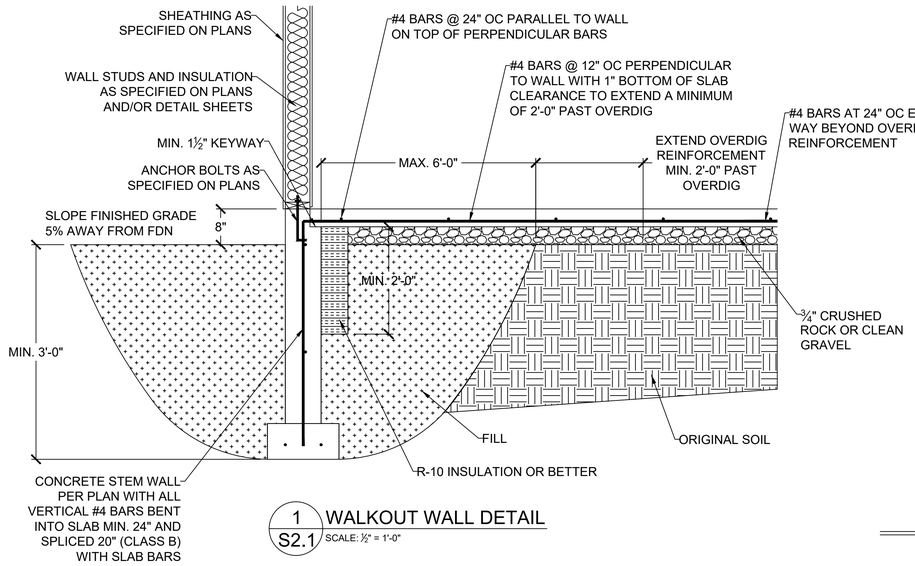


1 S2.1 WALKOUT WALL DETAIL
SCALE: ½" = 1'-0"

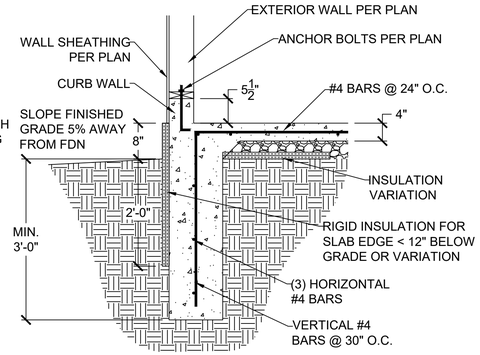


1 S2.1 WALKOUT FOUNDAITON DETAIL
SCALE: ½" = 1'-0"

(ALTERNATE)

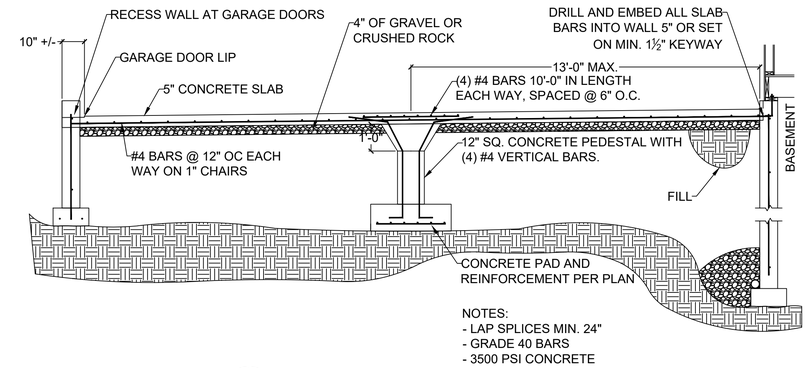


2 S2.1 GARAGE SLAB ON FILL
SCALE: ¼" = 1'-0" (18x24) OR ⅜" = 1'-0" (24x36)

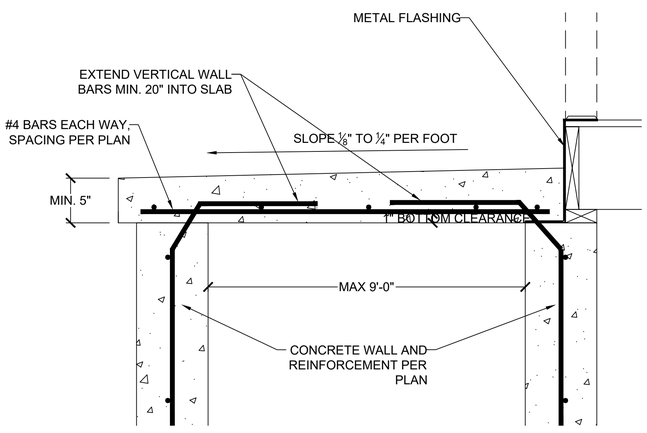


3 S2.1 PORCH SLAB DETAIL
SCALE: ½" = 1'-0" (18x24) OR ¾" = 1'-0" (24x36)

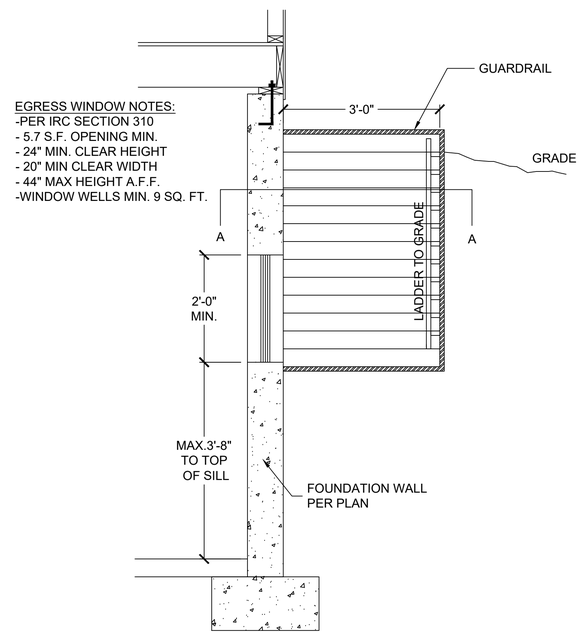


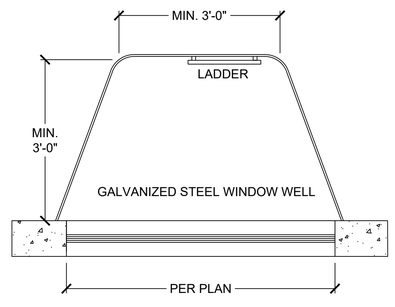


SECTION A-A

5 S2.1 EGRESS WINDOW WELL ELEVATION AND PLAN DETAILS
SCALE: ½" = 1'-0" (18x24) OR ¾" = 1'-0" (24x36)

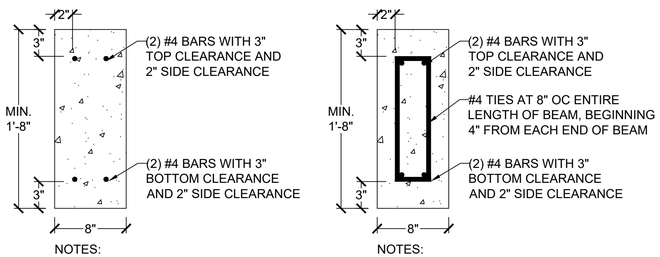


NOTES:
- MAX. 3'-6" IN LENGTH
- BARS SHALL EXTEND MIN. 2'-0" PAST OPENING ON EACH SIDE

NOTES:
- MAX. 6'-0" IN LENGTH
- BARS SHALL EXTEND MIN. 2'-0" PAST OPENING ON EACH SIDE

4 S2.1 CONCRETE HEADER DETAILS
SCALE: ½" = 1'-0" (18x24) OR ¾" = 1'-0" (24x36)

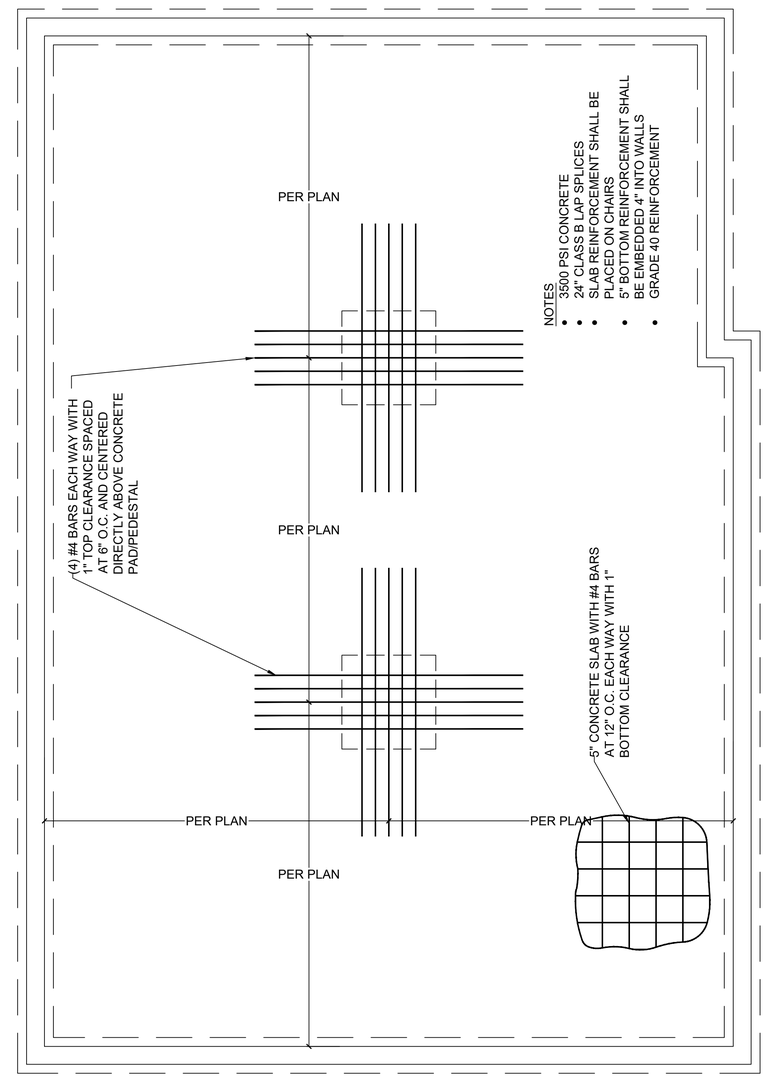


VISTA STRUCTURAL ENGINEERING, LLC
14718 NW DELIA STREET ☆ PORTLAND, OREGON 97229
OFFICE: 971.645.0901 ☆ MOBILE: 971.645.0901 ☆
☆ DENNIS@VISTASTRUCTURAL.COM ☆ VISTASTRUCTURAL.COM

CLIENT: BELLA HOMES, LLC
JOB TITLE: THE OXFORD 4
LOT 2, NEW LONGVIEW
LOCATION: LEE'S SUMMIT, MISSOURI

STATE OF MISSOURI
DENNIS HEIER
NUMBER PE-2010001772
PROFESSIONAL ENGINEER
2-12-2020

| NO. | DATE | REVISION | BY |
|---|---|---|---|
| | | | |

DRAWING TITLE
FOUNDATION DETAILS

ENGINEER: DMH | CHECKED BY: DMH
JOB NO. 2375 | DRAWN BY: DMH
DATE: 2-12-2020
SHEET NUMBER
S2.1

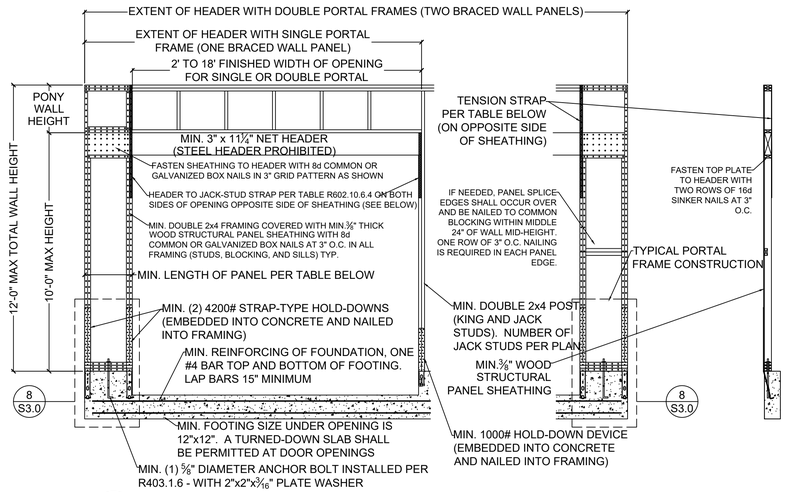


1 S3.0 METHOD PFH (PORTAL FRAME WITH HOLD-DOWNS) - PER FIGURE IRC R602.10.6.2

SCALE: ¼" = 1'-0" (18x24) OR ⅜" = 1'-0" (24x36)

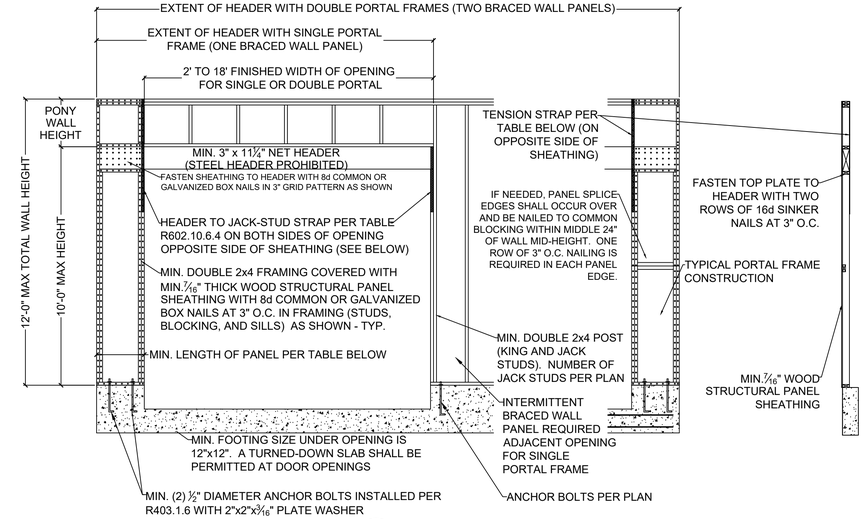


2 S3.0 METHOD PFG (PORTAL FRAME AT GARAGE DOOR) - PER FIGURE IRC R602.10.6.3

SCALE: ¼" = 1'-0" (18x24) OR ⅜" = 1'-0" (24x36)

| MINIMUM PANEL LENGTH FOR DETAIL 1/S3.0 (INCHES) | | | | | |
|---|---|---|---|---|---|
| | WALL HEIGHT | | | | |
| | 8 FEET | 9 FEET | 10 FEET | 11 FEET | 12 FEET |
| SUPPORTING ROOF ONLY | 16 | 16 | 16 | 18 | 20 |
| SUPPORTING ONE STORY AND ROOF | 24 | 24 | 24 | 27 | 29 |

| TENSION STRAP REQUIRED FOR HEADER TO JACK STUD FOR DETAILS 1/S3.0 AND 2/S3.0 (FROM TABLE R602.10.6.4) | | | | |
|---|---|---|---|---|
| MAX GARAGE OPENING (FT.) | PONY WALL WALL HT. (FT.) | REQUIRED SIMPSON STRAP | MIN. STRAP END LENGTH | NAILS REQUIRED IN EACH STRAP END LENGTH |
| 18'-0" | 0'-0" | CS20 | 0'-9" | (7) 8d |
| 9'-0" | 1'-0" | CS20 | 0'-9" | (7) 8d |
| 18'-0" | 1'-0" | CS14 | 1'-4" | (15) 8d |
| 9'-0" | 2'-0" | CS18 | 0'-11" | (9) 8d |
| 18'-0" | 2'-0" | CMSTC16 | 1'-8" | (25) 16d SINKER |
| 9'-0" | 4'-0" | CMSTC16 | 1'-8" | (25) 16d SINKER |
| 16'-0" | 4'-0" | CMST14 | 2'-6" | (33) 10d |

| MINIMUM PANEL LENGTH FOR DETAIL 2/S3.0 (INCHES) | | | | |
|---|---|---|---|---|
| WALL HEIGHT | | | | |
| 8 FEET | 9 FEET | 10 FEET | 11 FEET | 12 FEET |
| 24 | 27 | 30 | 33[a] | 36[a] |

a. Maximum opening height for PFG is 10 feet in accordance with Figure R602.10.6.3, but wall height may be increased to 12 feet with pony wall

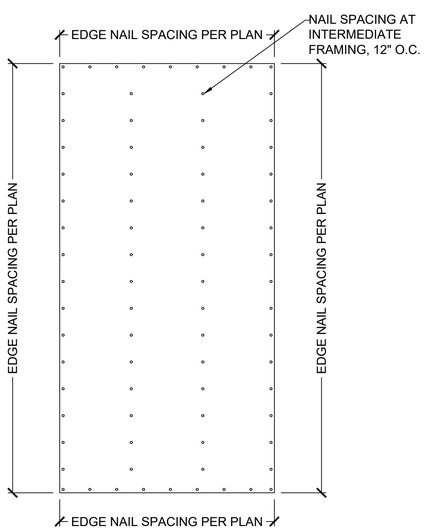


3 S3.0 EXTERIOR WALL SHEATHING PANEL ATTACHMENT

SCALE: ½" = 1'-0" (18x24) OR ¾" = 1'-0" (24x36)

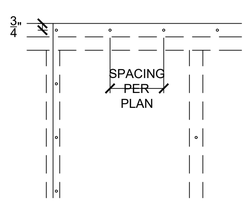


SHEATHING EDGE AT TOP PLATE (SINGLE ROW OF FASTENERS)

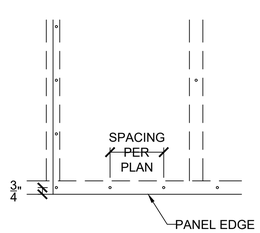


SHEATHING EDGE AT BOTTOM PLATE (SINGLE ROW OF FASTENERS)

4 S3.0 SHEATHING EDGE AT TOP AND BOTTOM PLATES

SCALE: 1" = 1'-0" (18x24) OR 1½" = 1'-0" (24x36)

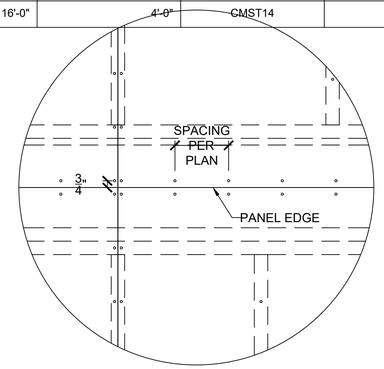


5 S3.0 SHEATHING EDGE AT HORIZONTAL FRAMING MEMBER

SCALE: 1" = 1'-0" (18x24) OR 1½" = 1'-0" (24x36)

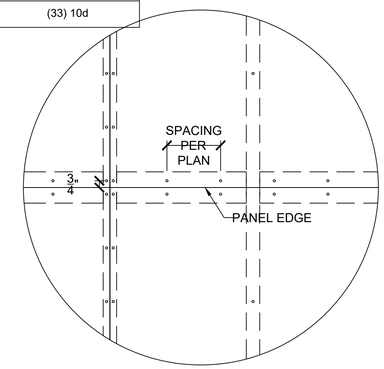


6 S3.0 SHEATHING EDGE AT PANEL SPLICE ACROSS STUDS

SCALE: 1" = 1'-0" (18x24) OR 1½" = 1'-0" (24x36)

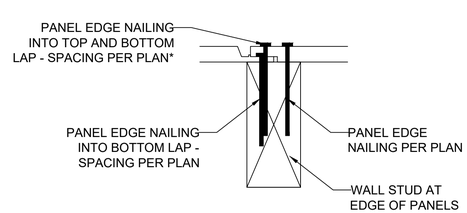


*NOTE: NAILING INTO TOP AND BOTTOM LAP IS IN ADDITION TO NAILING REQUIRED INTO BOTTOM LAP. FOR EXAMPLE, IF PLAN CALLS FOR NAILS @ 6" O.C. AT EDGES, BOTTOM LAP SHALL BE FASTENED AT 6" O.C AND, IN ADDITION, NAILING SHALL ALSO BE INSTALLED THROUGH TOP AND BOTTOM LAP @ 6" O.C. STAGGERED 3" FROM BOTTOM LAP NAILING

7 S3.0 FASTENING INSTRUCTIONS FOR SHIPLAP PANEL SHEATHING

SCALE: 4" = 1'-0" (18x24) OR 6" = 1'-0" (24x36)

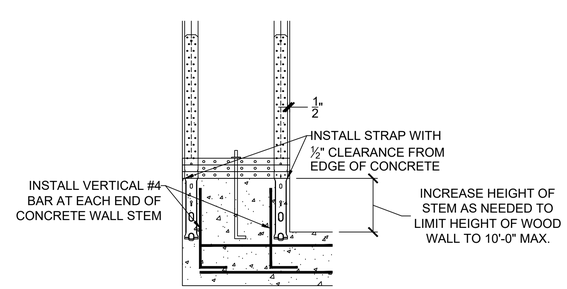


8 S3.0 GARAGE HOLD-DOWN STRAP INSTALLATION

SCALE: ½" = 1'-0" (18x24) OR ¾" = 1'-0" (24x36)

VISTA STRUCTURAL ENGINEERING, LLC
14718 NW DELIA STREET ☆ PORTLAND, OREGON 97229
OFFICE: 971.645.0901 ☆ MOBILE: 971.645.0901 ☆
☆ DENNIS@VISTASTRUCTURAL.COM ☆ VISTASTRUCTURAL.COM

CLIENT: BELLA HOMES, LLC
JOB TITLE: THE OXFORD 4
LOT 2, NEW LONGVIEW
LOCATION: LEE'S SUMMIT, MISSOURI

STATE OF MISSOURI
DENNIS HEIER
NUMBER PE-2010001772
PROFESSIONAL ENGINEER
2-12-2020

| NO. | DATE | REVISION | BY |
|---|---|---|---|
| | | | |

DRAWING TITLE
FRAMING DETAILS

ENGINEER: DMH | CHECKED BY: DMH
JOB NO. 2375 | DRAWN BY: DMH
DATE: 2-12-2020
SHEET NUMBER
S3.0

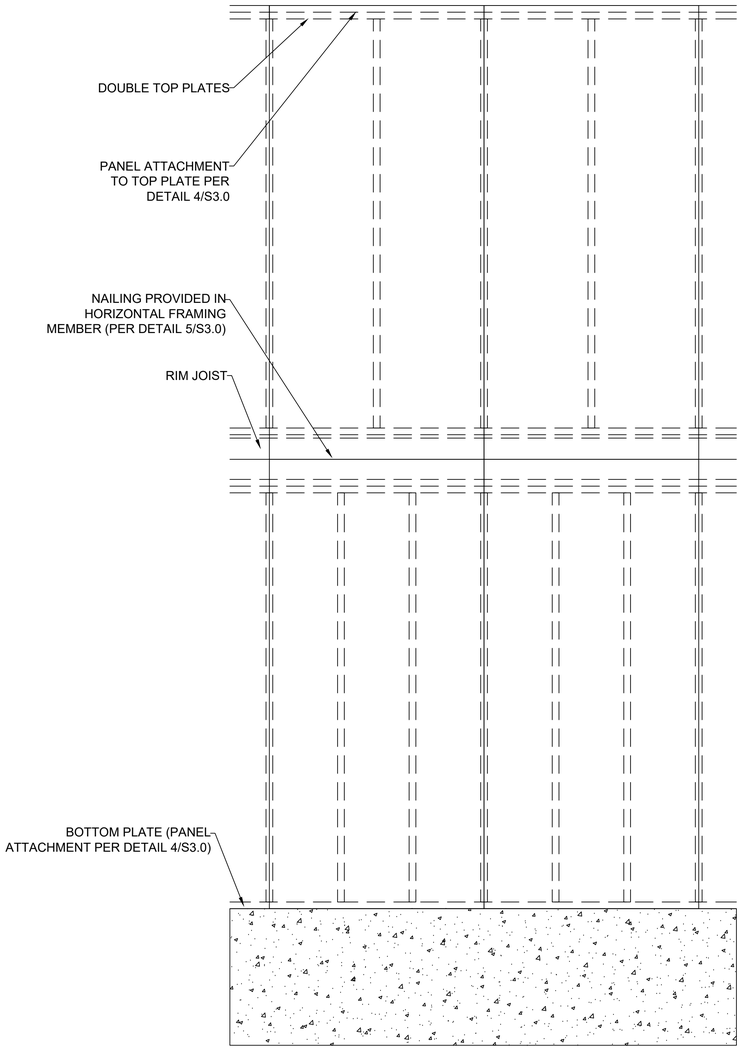


1 S3.1 EXTERIOR WALL SHEATHING PANEL ATTACHMENT
PANEL SPLICE OVER HORIZONTAL FRAMING MEMBER

SCALE: ½" = 1'-0" (18x24) OR ¾" = 1'-0" (24x36)

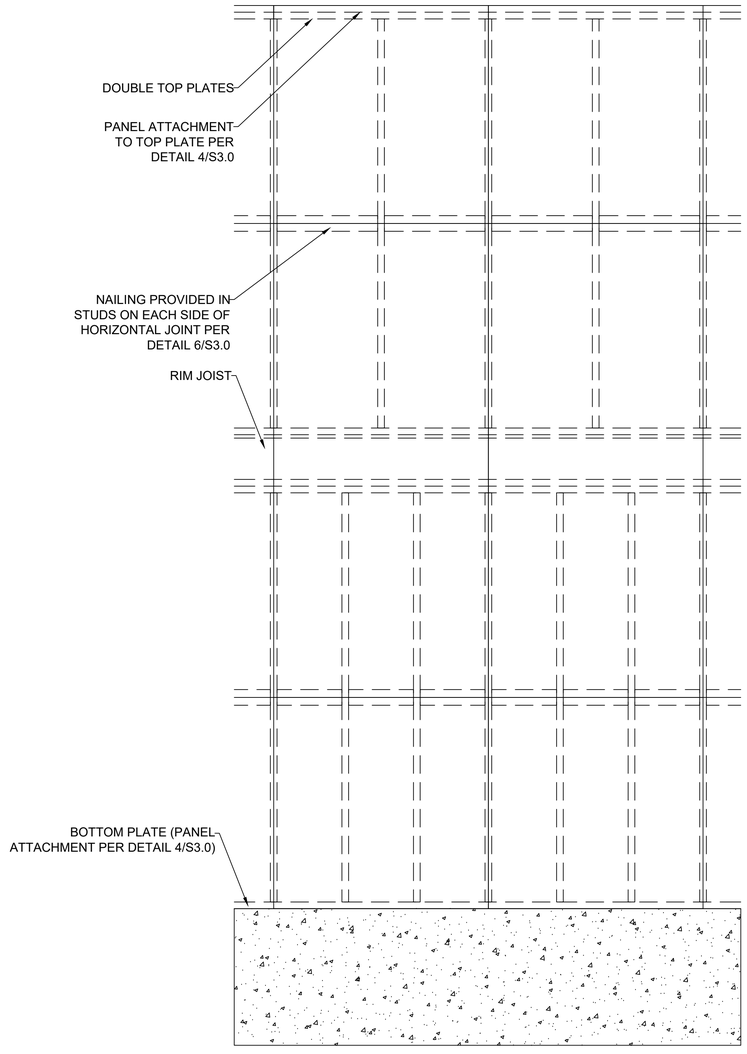


2 S3.1 EXTERIOR WALL SHEATHING PANEL ATTACHMENT
PANEL SPLICE OCCURRING ACROSS STUDS

SCALE: ½" = 1'-0" (18x24) OR ¾" = 1'-0" (24x36)

3 S3.1 EXTERIOR WALL SECTION

SCALE: ½" = 1'-0"

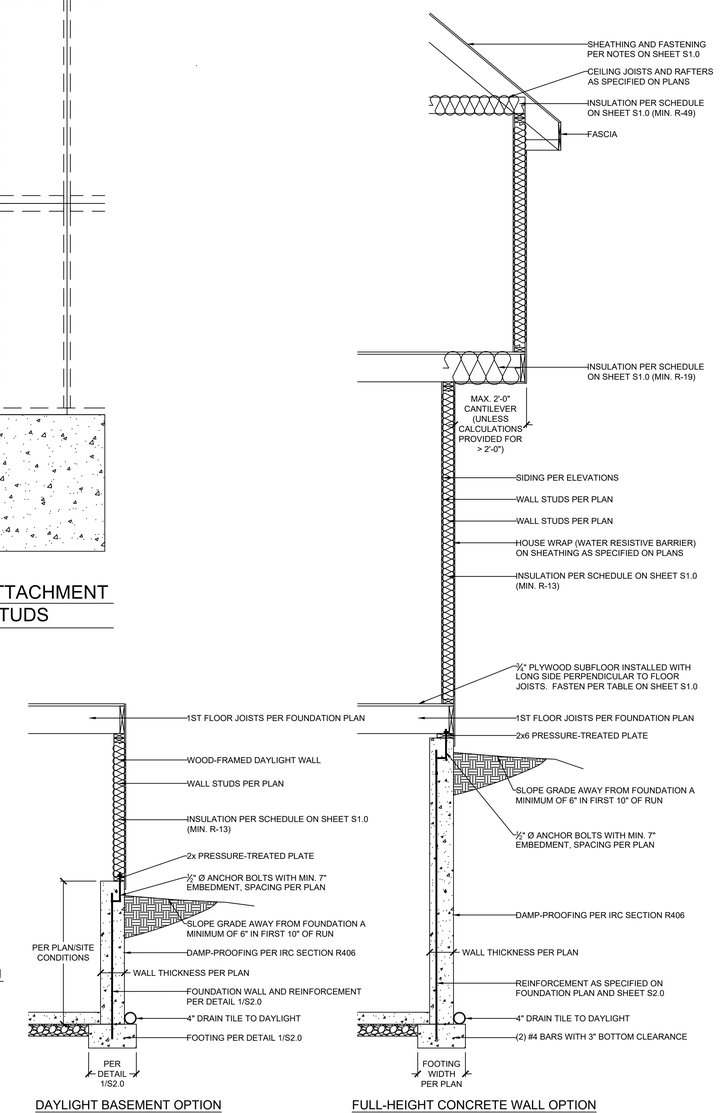


DAYLIGHT BASEMENT OPTION

FULL-HEIGHT CONCRETE WALL OPTION

VISTA STRUCTURAL ENGINEERING, LLC
14718 NW DELIA STREET ☆ PORTLAND, OREGON 97229
OFFICE: 971.645.0901 ☆ MOBILE: 971.645.0901 ☆
☆ DENNIS@VISTASTRUCTURAL.COM ☆ VISTASTRUCTURAL.COM

CLIENT: BELLA HOMES, LLC
JOB TITLE: THE OXFORD 4
LOT 2, NEW LONGVIEW
LOCATION: LEE'S SUMMIT, MISSOURI

STATE OF MISSOURI
DENNIS HEIER
NUMBER PE-2016001772
PROFESSIONAL ENGINEER
2-12-2020

| NO. | DATE | REVISION | BY |
|---|---|---|---|
| | | | |

DRAWING TITLE

# FRAMING DETAILS

| | |
|---|---|
| ENGINEER: DMH | CHECKED BY: DMH |
| JOB NO. 2375 | DRAWN BY: DMH |
| DATE: 2-12-2020 | |

SHEET NUMBER

S3.1

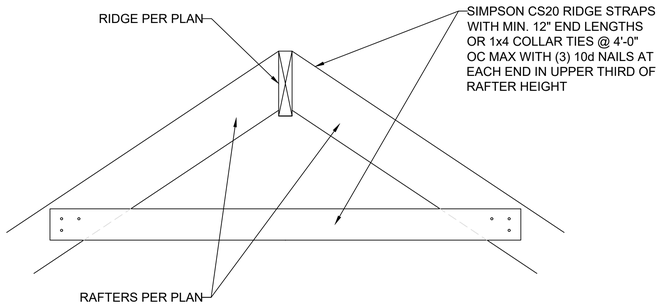


1 S3.2 RIDGE FRAMING DETAIL
SCALE: 1" = 1'-0" (18x24) OR 1½" = 1'-0" (24x36)

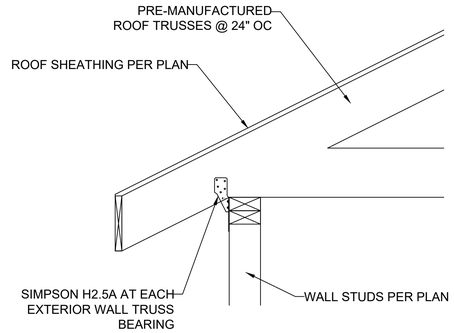


2 S3.2 TRUSS CONNECTION TO EXT. WALL BEARING
SCALE: 1" = 1'-0" (18x24) OR 1½" = 1'-0" (24x36)

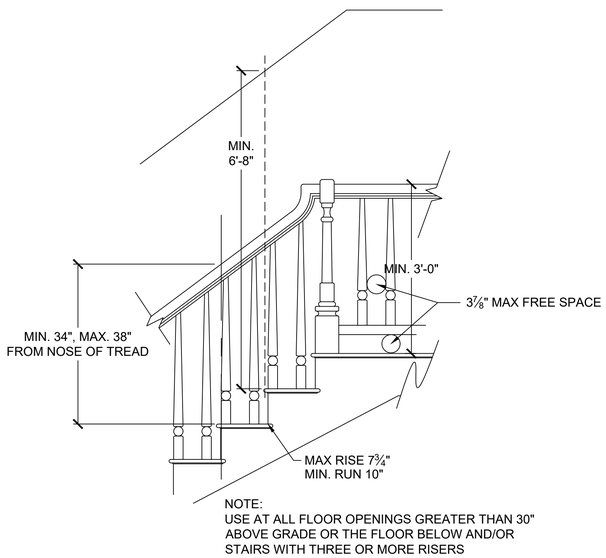


NOTE:
USE AT ALL FLOOR OPENINGS GREATER THAN 30" ABOVE GRADE OR THE FLOOR BELOW AND/OR STAIRS WITH THREE OR MORE RISERS

4 S3.2 STAIR AND HANDRAIL/GUARDRAIL DETAIL
SCALE: ½" = 1'-0" (18x24) OR ¾" = 1'-0" (24x36)

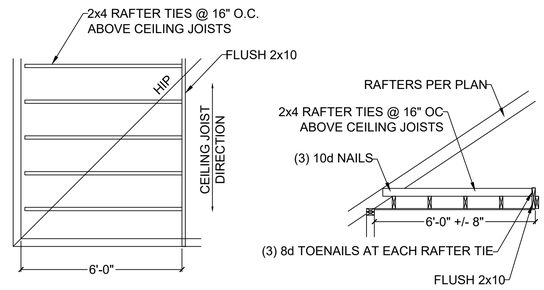


5 S3.2 RAFTER TIES AT CEILING JOISTS PERP. TO RAFTERS
SCALE: ¼" = 1'-0" (18x24) OR ⅜" = 1'-0" (24x36)

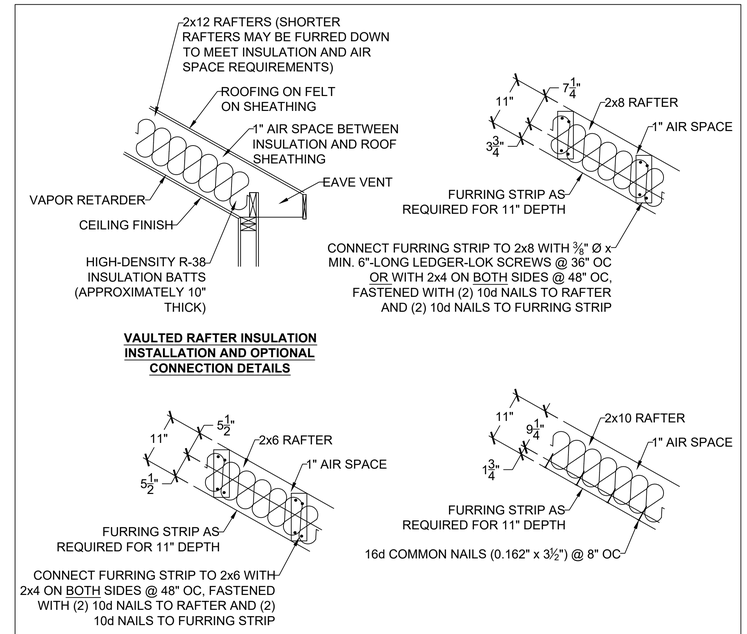


3 S3.2 VAULTED RAFTER INSULATION DETAILS
SCALE: ¾" = 1'-0"

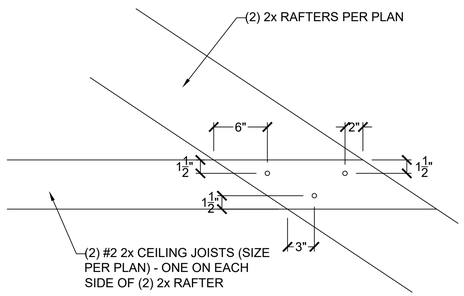


6 S3.2 FIELD-CONSTRUCTED A-FRAME DETAIL
SCALE: 1" = 1'-0" (18x24) OR 1½" = 1'-0" (24x36)

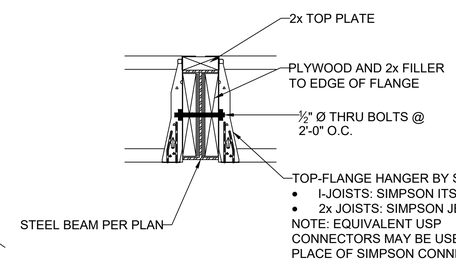


7 S3.2 FLOOR JOIST TO FLUSH STEEL BEAM DETAIL
SCALE: 1" = 1'-0" (18x24) OR 1½" = 1'-0" (24x36)

| HEIGHT (FT.) | SPACING (INCHES O.C.) | | | |
|---|---|---|---|---|
| | 24 | 16 | 12 | 8 |
| SUPPORTING A ROOF ONLY | | | | |
| 10 OR LESS | 2x4 | 2x4 | 2x4 | 2x4 |
| 12 | 2x6 | 2x4 | 2x4 | 2x4 |
| 14 | 2x6 | 2x6 | 2x6 | 2x4 |
| 16 | 2x6 | 2x6 | 2x6 | 2x4 |
| 18 | DR | 2x6 | 2x6 | 2x6 |
| 20 | DR | DR | 2x6 | 2x6 |
| SUPPORTING ONE FLOOR AND A ROOF | | | | |
| 10 OR LESS | 2x6 | 2x4 | 2x4 | 2x4 |
| 12 | 2x6 | 2x6 | 2x6 | 2x4 |
| 14 | 2x6 | 2x6 | 2x6 | 2x6 |
| 16 | DR | 2x6 | 2x6 | 2x6 |
| 18 | DR | 2x6 | 2x6 | 2x6 |
| 20 | DR | DR | 2x6 | 2x6 |
| SUPPORTING TWO FLOORS AND A ROOF | | | | |
| 10 OR LESS | 2x6 | 2x6 | 2x4 | 2x4 |
| 12 | 2x6 | 2x6 | 2x6 | 2x6 |
| 14 | 2x6 | 2x6 | 2x6 | 2x6 |
| 16 | DR | 2x6 | 2x6 | 2x6 |
| 18 | DR | DR | 2x6 | 2x6 |
| 20 | DR | DR | DR | 2x6 |

NOTES:
1) DR = DESIGN REQUIRED
2) UTILITY, STANDARD, STUD AND #3 GRADE LUMBER OF ANY SPECIES ARE NOT PERMITTED
3) THIS TABLE DOES NOT APPLY FOR STUDS SUPPORTING MEMBERS WITH A TRIB. LENGTH GREATER THAN 6'-0"

8 S3.2 MAXIMUM ALLOWABLE LENGTH OF WOOD WALL STUDS (IRC TABLE 602.3.1)

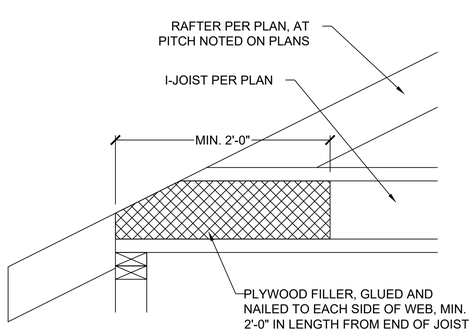


9 S3.2 COPED I-JOIST REINFORCEMENT
SCALE: 1" = 1'-0" (18x24) OR 1½" = 1'-0" (24x36)

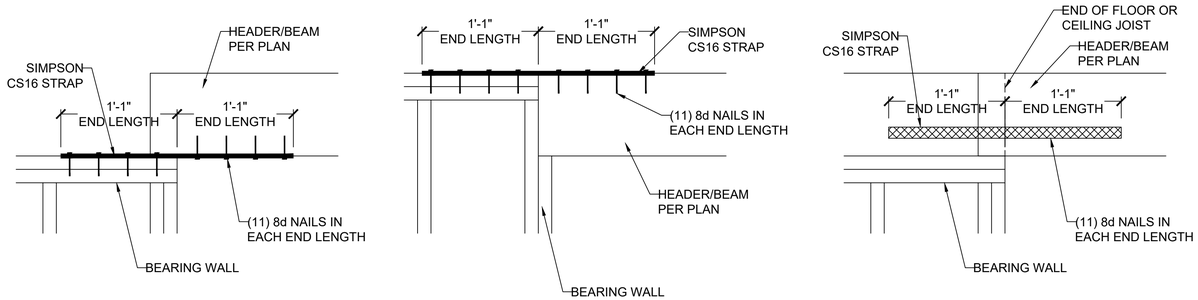


10 S3.2 HEADER/BEAM CONNECTION OPTIONS AT OUTDOOR/OPEN SPACE
SCALE: 1" = 1'-0" (18x24) OR 1½" = 1'-0" (24x36)

VISTA STRUCTURAL ENGINEERING, LLC
14718 NW DELIA STREET ☆ PORTLAND, OREGON 97229
OFFICE: 971.645.0901 ☆ MOBILE: 971.645.0901 ☆
☆ DENNIS@VISTASTRUCTURAL.COM ☆ VISTASTRUCTURAL.COM

CLIENT: BELLA HOMES, LLC
JOB TITLE: THE OXFORD 4
LOT 2, NEW LONGVIEW
LOCATION: LEE'S SUMMIT, MISSOURI

STATE OF MISSOURI
DENNIS HEIER
NUMBER PE-2010001772
PROFESSIONAL ENGINEER
2-12-2020

| NO. | DATE | REVISION | BY |
|---|---|---|---|
| | | | |

DRAWING TITLE
FRAMING DETAILS

ENGINEER: DMH | CHECKED BY: DMH
JOB NO. 2375 | DRAWN BY: DMH
DATE: 2-12-2020
SHEET NUMBER
S3.2

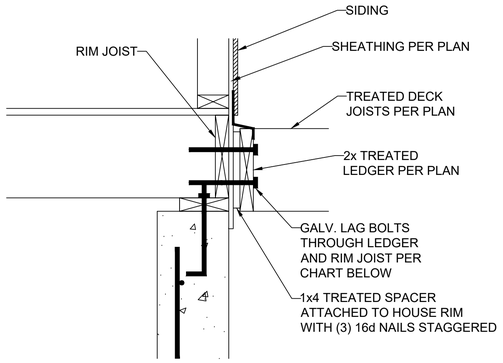


DECK LEDGER ATTACHMENT GUIDE

| DECK JOIST SPAN | ½" Ø GALV. LAG OR ⅜" Ø LEDGER-LOK SPACING |
|---|---|
| 10'-0" OR LESS | 16" OC |
| 10'-0" - 13'-11" | 12" OC OR @ 16" OC DOUBLED EVERY OTHER |
| 14'-0" - 18'-0" | 8" OC OR @ 16" OC DOUBLED |

1 S3.3 LEDGER ATTACHMENT
SCALE: 1" = 1'-0" (18x24) OR 1½" = 1'-0" (24x36)

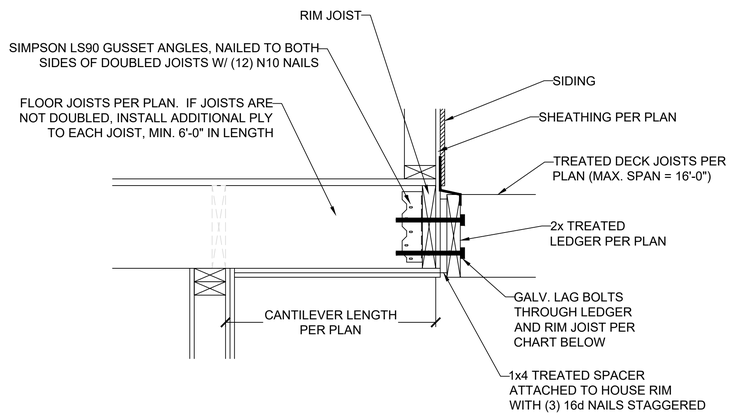


2 S3.3 CANTILEVER WITH DECK ATTACHMENT
SCALE: 1" = 1'-0" (18x24) OR 1½" = 1'-0" (24x36)

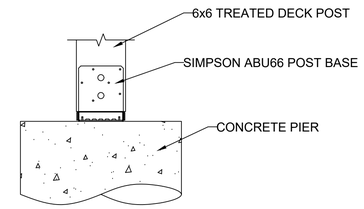


3 S3.3 DECK POST BASE
SCALE: 1" = 1'-0" (18x24) OR 1½" = 1'-0" (24x36)

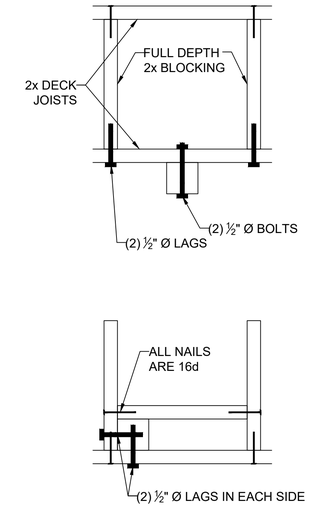


4 S3.3 REINF. POST CONNECTIONS
SCALE: 1" = 1'-0" (18x24) OR 1½" = 1'-0" (24x36)

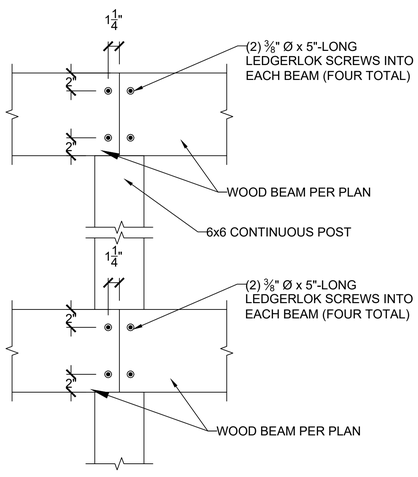


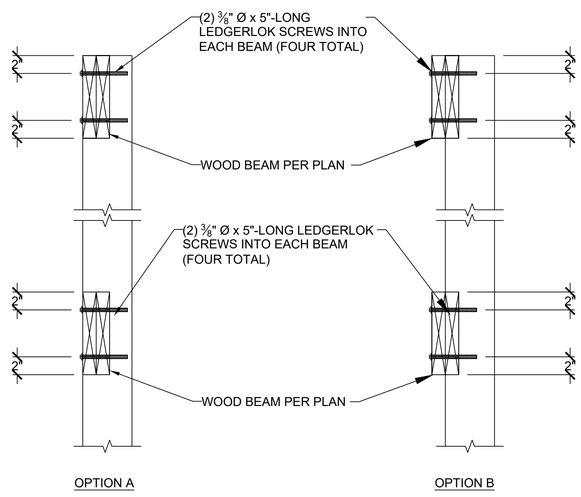


5 S3.3 LET-IN (COVERED) DECK BEAM CONNECTION
SCALE: 1" = 1'-0" (18x24) OR 1½" = 1'-0" (24x36)

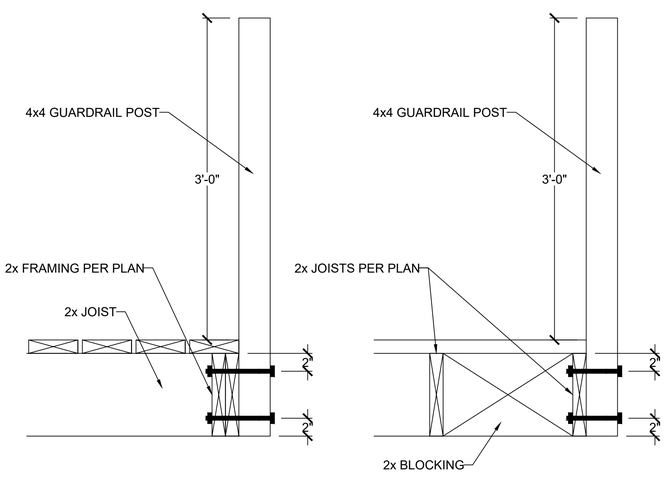


6 S3.3 GUARDRAIL CONNECTION
SCALE: 1" = 1'-0" (18x24) OR 1½" = 1'-0" (24x36)

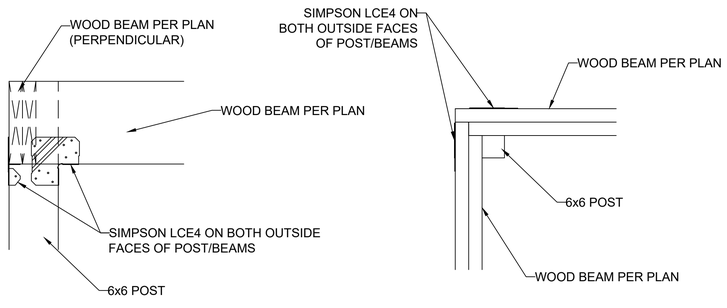


7 S3.3 ALTERNATE COVERED DECK/PORCH INTERSECTION CORNER BEAM CONNECTION
SCALE: 1" = 1'-0" (18x24) OR 1½" = 1'-0" (24x36)

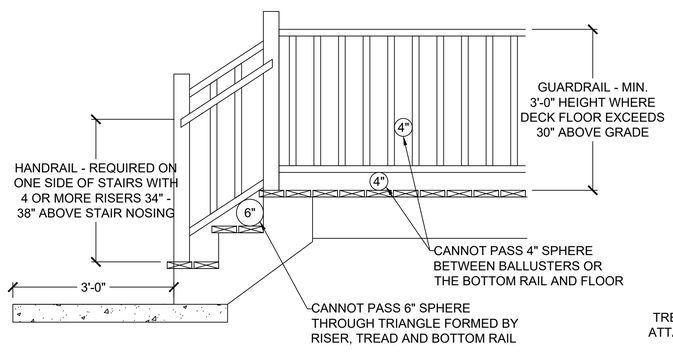


8 S3.3 GUARDRAIL DETAIL
SCALE: ½" = 1'-0" (18x24) OR ¾" = 1'-0" (24x36)

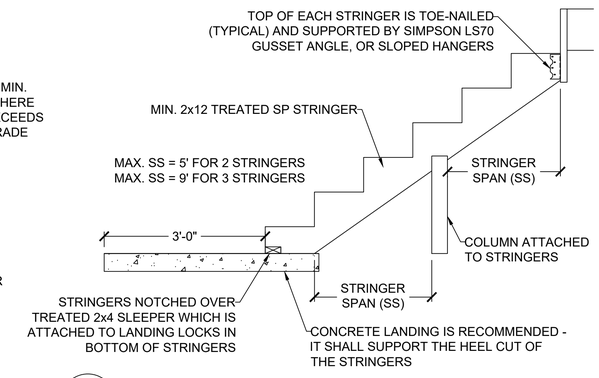


9 S3.3 STAIR STRINGER DETAIL (MAX. 5' STAIR WIDTH)
SCALE: ½" = 1'-0" (18x24) OR ¾" = 1'-0" (24x36)

VISTA STRUCTURAL ENGINEERING, LLC
14718 NW DELIA STREET ☼ PORTLAND, OREGON 97229
OFFICE: 971.645.0901 ☼ MOBILE: 971.645.0901 ☼
☼ DENNIS@VISTASTRUCTURAL.COM ☼ VISTASTRUCTURAL.COM

CLIENT: BELLA HOMES, LLC
JOB TITLE: THE OXFORD 4
LOT 2, NEW LONGVIEW
LOCATION: LEE'S SUMMIT, MISSOURI

STATE OF MISSOURI
DENNIS HEIER
NUMBER PE-2014001972
PROFESSIONAL ENGINEER
2-12-2020

| NO. | DATE | REVISION | BY |
|---|---|---|---|
| | | | |

DRAWING TITLE
FRAMING DETAILS

ENGINEER: DMH | CHECKED BY: DMH
JOB NO. 2375 | DRAWN BY: DMH
DATE: 2-12-2020
SHEET NUMBER
S3.3

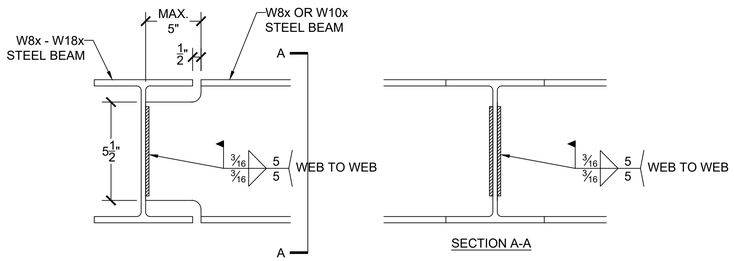


1 / S3.4 WELDED T-BEAM CONNECTION FOR W8x AND W10x BEAMS
SCALE: 2" = 1'-0" (18x24) OR 3" = 1'-0" (24x36)

(OPTION #1)

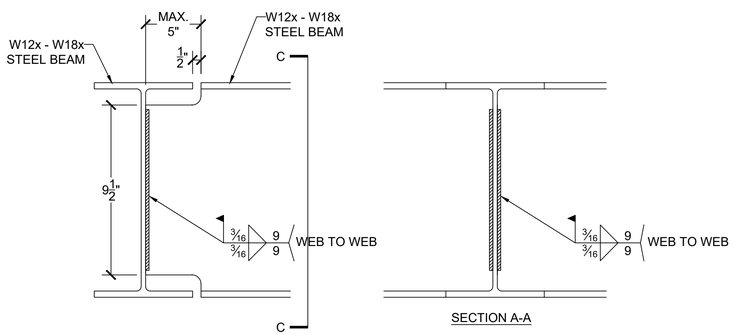


2 / S3.4 WELDED T-BEAM CONNECTION FOR W12x, W14x, W16x & W18x BEAMS
SCALE: 2" = 1'-0" (18x24) OR 3" = 1'-0" (24x36)

(OPTION #1)

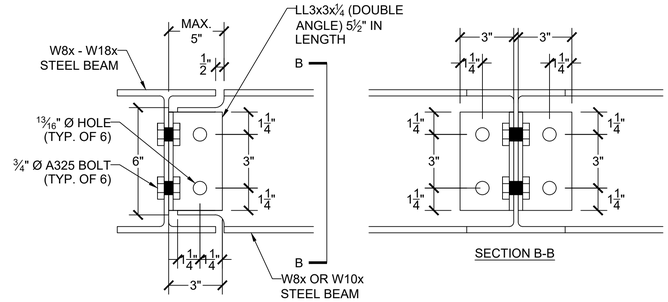


1 / S3.4 BOLTED T-BEAM CONNECTION FOR W8x AND W10x BEAMS
SCALE: 2" = 1'-0" (18x24) OR 3" = 1'-0" (24x36)

(OPTION #2)

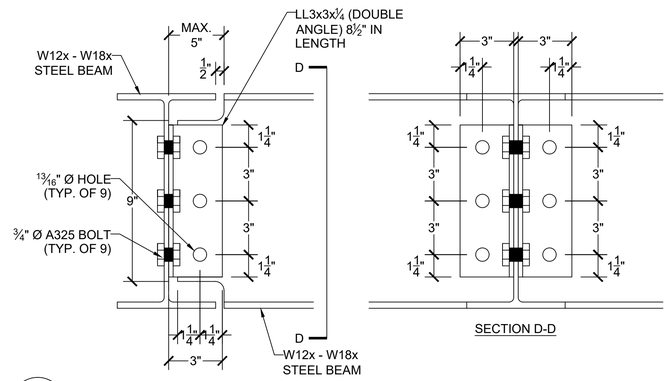


2 / S3.4 BOLTED T-BEAM CONNECTION FOR W12x, W14x, W16x & W18x BEAMS
SCALE: 2" = 1'-0" (18x24) OR 3" = 1'-0" (24x36)

(OPTION #2)

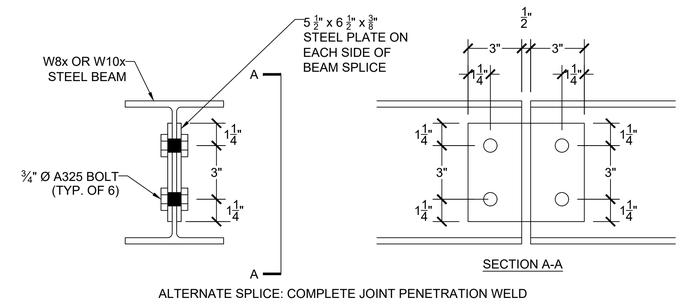


3 / S3.4 BEAM SPLICE CONNECTION FOR W8x AND W10x BEAMS
SCALE: 2" = 1'-0" (18x24) OR 3" = 1'-0" (24x36)

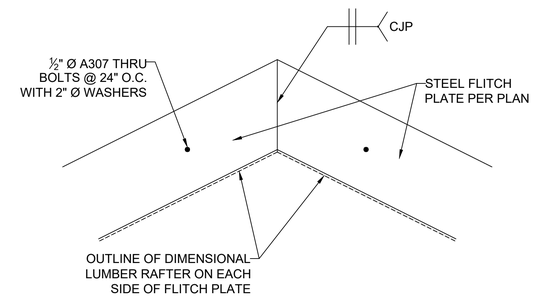


4 / S3.4 RAFTER FLITCH PLATE DETAIL
SCALE: 1" = 1'-0" (18x24) OR 1½" = 1'-0" (24x36)

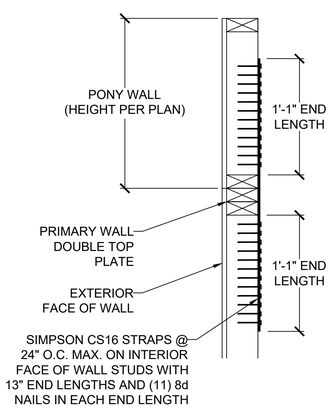


5 / S3.4 SPLICED WALL CONNECTION
SCALE: 1" = 1'-0" (18x24) OR 1½" = 1'-0" (24x36)

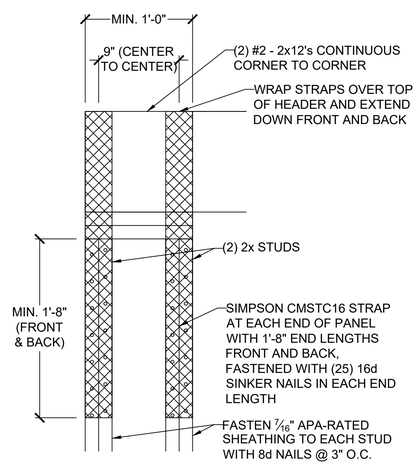


NOTE: SILL PLATE OF PANEL SHALL BE MIN. (1) 2x AND FASTENED WITH ½" Ø ANCHOR BOLT AND 2" Ø WASHER PLATE

6 / S3.4 3RD CAR STALL BRACING
SCALE: 1" = 1'-0" (18x24) OR 1½" = 1'-0" (24x36)

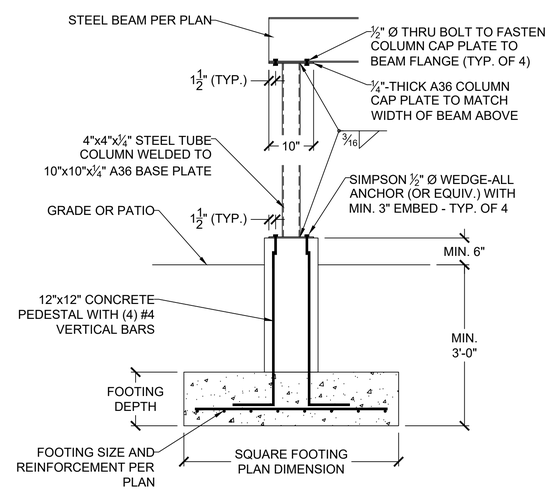


7 / S3.4 EXTERIOR STEEL COLUMN CONNECTIONS
SCALE: ½" = 1'-0" (18x24) OR ¾" = 1'-0" (24x36)

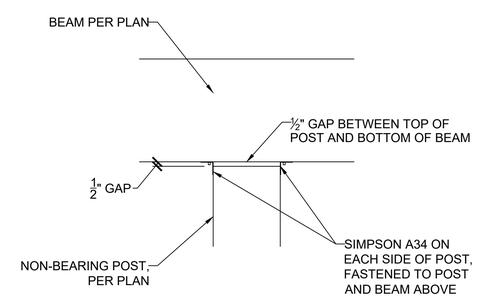


8 / S3.4 NON-BEARING POST CONNECTION
SCALE: 1" = 1'-0" (18x24) OR 1½" = 1'-0" (24x36)

VISTA STRUCTURAL ENGINEERING, LLC
14718 NW DELIA STREET ☆ PORTLAND, OREGON 97229
OFFICE: 971.645.0901 ☆ MOBILE: 971.645.0901 ☆
☆ DENNIS@VISTASTRUCTURAL.COM ☆ VISTASTRUCTURAL.COM

CLIENT: BELLA HOMES, LLC
JOB TITLE: THE OXFORD 4
LOT 2, NEW LONGVIEW
LOCATION: LEE'S SUMMIT, MISSOURI

STATE OF MISSOURI
DENNIS HEIER
NUMBER PE-2011001972
PROFESSIONAL ENGINEER
2-12-2020

| NO. | DATE | REVISION | BY |
|---|---|---|---|
| | | | |

DRAWING TITLE
# FRAMING DETAILS

| | |
|---|---|
| ENGINEER: DMH | CHECKED BY: DMH |
| JOB NO. 2375 | DRAWN BY: DMH |
| DATE: 2-12-2020 | |

SHEET NUMBER
S3.4