LIGHT FIXTURE SCHEDULE

FIXTURE TYPE	MANUFACTURER	CATALOG NUMBER	DESCRIPTION	LED MODULE / DRIVER								REMARKS
				ID	WATTS	LUMENS	CRI	CCT	DIMMING	VOLTAGE		
A	WILLIAMS	6DR SERIES	6" ROUND RECESSED DOWNLIGHT. DIE-FORMED STEEL PAN WITH FINNED, EXTRUDED ALUMINUM PASSIVE HEAT SINK. OPEN, SELF-FLANGED, SEMI-SPECULAR LOW IRIDESCENT FINISH ALUMINUM REFLECTOR WITH WIDE BEAM DISTRIBUTION , "TD" LENS OVER DIODES AND IC-RATED HOUSING	L20	19	1782	80	3000K	0-10V	120		1
A4	WILLIAMS	6DR SERIES	SAME AS TYPE A EXCEPT WITH A DIFFERENT LUMEN PACKAGE.	L20	13.8	1497	80	3000K	0-10V	120		1
A5	WILLIAMS	6AR SERIES	6" ROUND RECESSED DOWNLIGHT. DIE-FORMED STEEL PAN WITH FINNED, EXTRUDED ALUMINUM PASSIVE HEAT SINK. OPEN, SELF-FLANGED, SEMI-SPECULAR LOW IRIDESCENT FINISH ALUMINUM REFLECTOR WITH WIDE BEAM DISTRIBUTION AND IC-RATED HOUSING.	L30	31.3	2917	80	3000K	0-10V	120		1
A6	WILLIAMS	6AR SERIES	6" ROUND RECESSED DOWNLIGHT. DIE-FORMED STEEL PAN WITH FINNED, EXTRUDED ALUMINUM PASSIVE HEAT SINK. OPEN, SELF-FLANGED, SEMI-SPECULAR LOW IRIDESCENT FINISH ALUMINUM REFLECTOR WITH WIDE BEAM DISTRIBUTION, "WET/CC" LENS OVER DIODES AND IC-RATED HOUSING.	L30	31.3	2917	80	3000K	0-10V	120		1
B	WILLIAMS	4DR SERIES	4.5" ROUND RECESSED DOWNLIGHT. DIE-FORMED STEEL PAN WITH FINNED, EXTRUDED ALUMINUM PASSIVE HEAT SINK. OPEN, SELF-FLANGED, WHITE TEXTURE POWDER COAT FINISH ALUMINUM REFLECTOR WITH MEDIUM BEAM DISTRIBUTION, "TD" LENS OVER DIODES AND IC-RATED HOUSING.	L20	19.8	2005	80	3000K	0-10V	120		1
B2	WILLIAMS	4DR SERIES	4.5" ROUND RECESSED DOWNLIGHT. DIE-FORMED STEEL PAN WITH FINNED, EXTRUDED ALUMINUM PASSIVE HEAT SINK. OPEN, SELF-FLANGED, WHITE TEXTURE POWDER COAT FINISH ALUMINUM REFLECTOR WITH NARROW BEAM DISTRIBUTION, WET/CC" LENS OVER DIODES AND IC-RATED HOUSING.	L20	19.8	2005	80	3000K	0-10V	120		1
C	PROGRESS	P300150-031-30	24" 1 LIGHT LED SCONCE FOR BATHROOM VANITY. FURNISH WITH DOWNWARD FACING LUMINAIRES. MATTE BLACK SHADES, AND BRUSHED NICKLE FINISH.	-	THREE(3) 100 WATT E26 SOCKET	-	-	3000K	0-10V	120		1,2
F	WILLIAMS	7SR SERIES	4'-0" LONG STANDARD STRIP FIXTURE WITH ROUND LENS AND SURFACE MOUNTING. ALL PARTS PAINTED WHITE AFTER FABRICATION.	L65	42.3	6313	80	3000K	0-10V	120		1
H	CAPITAL LIGHT FIXTURE COMPANY	428501MB	OWNDER FURNISHED. CONTRACTOR INSTALLED PENDANT LIGHT. CONTRACTOR TO PROVIDE LED BULB. MAX 14W PER BULB. COORDINATE WITH OWNER FOR BULB TYPE. COORDINATE EXACT MOUNTING LOCATION WITH ARCHITECT/OWNER.	-	168	1500	-	3000K	-	120		1,2,3
J	MILLENIUM LIGHTING	R SERIES RWHS17-RGN22	17" DIAMETER GOOSENECK WALL MOUNTED SHADE LIGHT. FURNISHED WITH SATIN BLACK FINISH. UL LISTED FOR WET LOCATIONS. VERIFY EXACT MOUNTING LOCATIONS AND HEIGHTS WITH ARCHITECT/OWNER.	-	ONE(1) 200 WATT E26 SOCKET	-	-	3000K	-	120		1,2
K	INVUE LIGHTING	ARBOR POST TOP SERIES	DECORATIVE POST-TOP SINGLE-HEAD LIGHT, LED, WITH TWO-PIECE IP66 RATED CORROSION RESISTANT ALUMINUM HOUSING. WAVESTREAM LED OPTICS. TYPE IV DISTRIBUTION WITH 5° ROUND, ALUMINUM, TAPERED 14'-0" TALL POLE BASE WITH COVER.	B3	96	8740	80	3000K	0-10V	120		1
S1	MCGRAW-EDISON	GALLEON LED GLEON SERIES	POLE-MOUNTED AREA LIGHT. LOW-PROFILE, ONE-PIECE DIE-CAST ALUMINUM HOUSING. LIGHT SQUARE LED ARRAYS - REFER TO LAMP DESCRIPTION FOR QUANTITY. IES TYPE IV WIDE DISTRIBUTION. DIE CAST ALUMINUM MOUNTING ARM. PROVIDE WITH 1'0 HIGH, SQUARE STRAIGHT STEEL POLE. POWDER COAT FINISH DARK BRONZE - COORDINATE EXACT COLOR WITH ARCHITECT AND OWNER.	SA3D	191	23,522	70	3000K	NO	120		1
S2	MCGRAW-EDISON	GALLEON LED GLEON SERIES	SAME AS TYPE 'S1' EXCEPT WITH HOUSE SIDE SHIELD.	SA3D	191	23,522	70	3000K	NO	120		1
XE	DUAL-LITE	EVC SERIES	COMBINATION EMERGENCY LIGHTING UNIT / EXIT LIGHT. UV-STABLE THERMOPLASTIC HOUSING, FINISH WHITE. ADJUSTABLE EYEBALL STYLE LIGHTING HEADS WITH GLASS LENS FOR EMERGENCY LIGHT. EXIT SIGN TO HAVE RED LETTERS WITH DIRECTIONAL ARROWS AS INDICATED ON THE PLANS. MAINTENANCE-FREE LITHIUM ION PHOSPHATE BATTERY FOR 90 MINUTE OPERATION OF LAMPS AND EXIT SIGN. FURNISH WITH CAPACITY FOR REMOTE HEAD. FULLY AUTOMATIC, SOLID-STATE CHARGER WITH TEST SWITCH AND AC-ON LIGHT.	TOTAL POWER CONSUMPTION = 2.4 WATTS.	-	-	-	-	120		-
				EMERGENCY: FOUR (4) HIGH-OUTPUT LEDS.	-	-	-	-				
				EXIT: FOUR (4) HIGH-OUTPUT LEDS.	-	-	-	-				
ERH		EVO	OUTDOOR REMOTE WITH 2 HEADS. BLACK FINISH.									
E	DUAL-LITE	EV SERIES	LOW-PROFILE EMERGENCY LIGHTING UNIT. FLAME-RATED, UV-STABLE THERMOPLASTIC HOUSING. TWO (2) SEMI-RECESSED, ADJUSTABLE "EYEBALL" HEADS WITH GLASS LENS. WHITE FINISH. MAINTENANCE-FREE BATTERY FOR 90 MINUTE OPERATION OF LAMPS. INTEGRAL TEST SWITCH. SELF DIAGNOSTICS AND AC-ON INDICATOR.	-	2 WATT HEADS	-	-	-	-	120		1

REMARKS:
1. FURNISH WITH AND INSTALL ALL NECESSARY HARDWARE AND MOUNTING BRACKETS.
2. FURNISH WITH CREE SCREW-IN BASE OMNIDIRECTIONAL LED LAMPS IN LIEU OF INCANDESCENT LAMPS. USE 9W LAMPS FOR 60W INCANDESCENT, 6W FOR 40W, 13.5W FOR 75W, AND 18W FOR 100W.
3. FIXTURE IS OWNER-PROVIDED. CONTRACTOR INSTALLED. COORDINATE EXACT ROUGH-IN REQUIREMENTS PRIOR TO CONSTRUCTION.

GENERAL NOTES (APPLICABLE TO ALL FIXTURES):
1) EQUALS ARE ACCEPTABLE ON ALL LIGHT FIXTURES UNLESS SPECIFICALLY NOTED OTHERWISE. REFER TO SPECIFICATIONS FOR APPROVED EQUAL FIXTURE MANUFACTURERS.
2) ALL DRIVERS ARE INTEGRAL TO FIXTURE UNLESS NOTED OTHERWISE. REFER TO SPECIFICATIONS FOR ADDITIONAL FIXTURE/DRIVER/BALLAST REQUIREMENTS.
3) ALL FIXTURES WITH PAINTED METAL PARTS SHALL BE PAINTED AFTER FABRICATION.
4) LUMENS LISTED FOR LED FIXTURES ARE GENERALLY DELIVERED LUMENS UNLESS NOTED OTHERWISE.
5) ALL EXTERIOR LED FIXTURES ARE FULL CUTOFF UNLESS NOTED OTHERWISE.
6) ALL FIXTURES IN FOOD PREPARATION OR SERVING AREAS SHALL BE FURNISHED WITH SHATTER-RESISTANT LAMPS UNLESS LENSED.
7) ALL FIXTURES SHALL BE IC RATED OR PROVIDED WITH INSULATION SHIELDS WHEN INSTALLED IN INSULATED AREAS OF THE TRUSS SPACE.
8) FOR ALL FIXTURES INSTALLED IN RATED ASSEMBLIES, FURNISH AND INSTALL APPROVED FIRE BARRIER (E.Z. BARRIER OR TENMAT FF109 SERIES) OVER FIXTURE TO MAINTAIN 1 HOUR CEILING ASSEMBLY RATING.
9) FIXTURE TO BE SELECTED BY OWNER AND FURNISHED AND INSTALLED BY CONTRACTOR.

SINGLE-SECTION PANELBOARD SCHEDULE

PANEL DESIGNATION: **PP1**
MOUNTING: SURFACE
LOCATION: POOL EQUIPMENT
MAIN LUG AMPS: 125
MAIN BREAKER: M.L.O.
VOLTAGE: 240/120
PHASE/WIRE: 1Ø, 3W

DESCRIPTION	PHASE A	PHASE B	C/B TRIP	C/B POLE	CIRCUIT #		C/B POLE	C/B TRIP	PHASE A	PHASE B	DESCRIPTION
SPARE	-		20	1	1	2	1	20			SPARE
SPARE		-	20	1	3	4	1	20		-	SPARE
SPARE	-		20	1	5	6	1	20	-		SPARE
SPARE		-	20	1	7	8	1	20		-	SPARE
SPARE	-		20	1	9	10	1	20	-		SPARE
SPARE		-	20	1	11	12	1	20		-	SPARE
SPARE	-		20	1	13	14	1	20	-		SPARE
SPARE		-	20	1	15	16	1	20		-	SPARE
SPARE	-		20	1	17	18	1	20	-		SPARE
SPACE		-	-	1	19	20	1	-		-	SPACE
SPACE	-		-	1	21	22	1	-	-		SPACE
SPACE		-	-	1	23	24	1	-		-	SPACE
SPACE	-		-	1	25	26	1	-	-		SPACE
SPACE		-	-	1	27	28	1	-		-	SPACE
SPACE	-		-	1	29	30	1	-	-		SPACE
SPACE		-	-	1	31	32	1	-		-	SPACE
SPACE	-		-	1	33	34	1	-	-		SPACE
SPACE		-	-	1	35	36	1	-		-	SPACE
SPACE	-		-	1	37	38	1	-	-		SPACE
SPACE		-	-	1	39	40	1	-		-	SPACE
SPACE	-		-	1	41	42	1	-	-		SPACE
TOTALS	0	0							0	0	TOTALS

PANELBOARD SIZING LOAD			
LOAD DESCRIPTION	CONNECTED	DEMAND	CODE MIN. (VA)
LIGHTS	0	1.25	0
RECEPTACLES	0	10KVA + 50% REST	0
MOTORS	0	1.25 x LARGEST + SUM OF REST	0
AIR CONDITIONING	0	1.00	0
SPACE HEATING	0	0.00	0
CONTINUOUS	0	1.25	0
NON-CONTINUOUS	0	1.00	0
POOL EQUIPMENT	16,000	1.00	16,000
MISC. LOADS 2	0	1.00	0
		SIZING LOAD:	16,000
		SIZING LOAD (AMPS):	67

CONNECTED PHASE LOADS		
PHASE	VA	AMPS
A	0	0.0
B	0	0.0
TOTALS	0	0.0

REMARKS:
1. SQUARE D NQ PANELBOARD OR EQUAL.

TWO-SECTION PANELBOARD SCHEDULE

PANEL DESIGNATION: **CP1**
MOUNTING: SURFACE
LOCATION: STORAGE
MAIN LUG AMPS: 400
MAIN BREAKER: 400
VOLTAGE: 240/120
PHASE/WIRE: 1Ø, 3W

DESCRIPTION	PHASE A	PHASE B	C/B TRIP	C/B POLE	CIRCUIT #		C/B POLE	C/B TRIP	PHASE A	PHASE B	DESCRIPTION
CONDENSING UNIT CU-1	2063		30	2	1	2	1	20	900		RECPT - POOL EQUIP.
		2063			3	4	1	20		180	RECEPT - RR 111, 112 COUNTER
CONDENSING UNIT CU-2	1987		30	2	5	6	1	20	-		SPARE
		1987			7	8	1	20		180	RECEPT - RR 101/COR./EXT.
WATER HEATER WH	2250		25	2	9	10	1	20	-		SPARE
		2250			11	12	1	20		500	LTS - CHRISTMAS LTS EAST
RECIRC PUMP RP-1	100		15	1	13	14	1	20	500		LTS - CHRISTMAS LTS WEST
FURNACE F-1		1176	20	1	15	16	1	20		1176	FURNACE F-1
FURNACE F-2	1176		20	1	17	18	1	20	1176		FURNACE F-2
RECPT - CONF./FLEX TV		180	20	1	19	20	1	20		180	RECPT - CONF./FLEX
RECPT - GREAT ROOM	900		20	1	21	22	1	20	900		RECEPT - GREAT ROOM
RECEPT - GREAT ROOM		900	20	1	23	24	1	20		180	RECEPT - GREAT ROOM REFRIG.
RECEPT - GREAT ROOM COUNTER	180		20	1	25	26	1	20	-		SPARE
RECEPT - GREAT ROOM COUNTER		180	20	1	27	28	1	20		1200	GREAT ROOM DISP.
ELECTRIC UNIT HEATER UH-1	2500		30	2	29	30	1	20	180		RECEPT - GREAT ROOM COUNTER
		2500			31	32	1	20		430	LTS - RR 101, CORRIDOR
RECEPT - CONF./FLEX	360		20	1	33	34	1	20	119		LTS - POOL DECK POST LIGHTS
LTS - POOL EQUIP/STOR		99	20	1	35	36	1	20		1400	LTS - EXTERIOR BLDG
LTS - MENS/WOMENS	942		20	1	37	38	1	20	297		LTS - EXTERIOR SOFFIT
LTS - CONF./FLEX		260	20	1	39	40	1	20		1250	LTS - PATIO
LTS - MECH/STOR/POOL STOR	186		20	1	41	42	1	20	200		SECURITY PANEL
TOTALS	12464	11595							3096	6400	TOTALS

SECOND SECTION: **CP1**
MOUNTING: SURFACE
LOCATION: STORAGE
MAIN LUG AMPS: 400
MAIN BREAKER: -
VOLTAGE: 240/120
PHASE/WIRE: 1Ø, 3W

DESCRIPTION	PHASE A	PHASE B	C/B TRIP	C/B POLE	CIRCUIT #		C/B POLE	C/B TRIP	PHASE A	PHASE B	DESCRIPTION
RECEPT - STORAGE	720		20	1	43	44	1	20	100		POOL LIGHTING CONTACTOR
SPARE		-	20	1	45	46	1	20		34	LTS - PARKING LOT
LIGHTING CONTROL PANEL LCP-1	500		20	1	47	48	1	20	1005		LTS - GREAT ROOM
LTS - COOKING AREA		360	20	1	49	50	1	20		360	RECPET - COOKING AREA
SPARE	360		20	1	51	52	1	15	77		EXHAUST FAN (EF-5)
SPARE		-	20	1	53	54	1	20		-	SPARE
SPARE	-		20	1	55	56	1	20	-		SPARE
SPARE		-	20	1	57	58	1	20		-	SPARE
SPARE	-		20	1	59	60	1	20	-		SPARE
SPARE		-	20	1	61	62	1	20		-	SPARE
SPARE	-		20	1	63	64	1	20	-		SPARE
SPARE		-	20	1	65	66	1	20		-	SPARE
SPARE	-		20	1	67	68	1	-	-		SPACE
SPARE		-	20	1	69	70	1	-		-	SPACE
SPARE	-		20	1	71	72	1	-	-		SPACE
SPARE		-	20	1	73	74	1	-		-	SPACE
SPARE	-		20	1	75	76	1	-	-		SPACE
SPARE		-	20	1	77	78	1	-		-	SPACE
PANELBOARD PP1	0		100	2	79	80	1	-	-		SPACE
		0			81	82	1	-		-	SPACE
SPARE			20	1	83	84	1	-		-	SPACE
TOTALS	1580	1560							1182	394	TOTALS

PANELBOARD SIZING LOAD			
LOAD DESCRIPTION	CONNECTED	DEMAND	CODE MIN. (VA)
LIGHTS	9,542	1.25	11,928
RECEPTACLES	8,400	10KVA + 50% REST	8,400
MOTORS	2,352	1.25 x LARGEST + SUM OF REST	2,646
AIR CONDITIONING	8,100	1.00	8,100
SPACE HEATING	5,000	0.00	0
CONTINUOUS	4,677	1.25	5,846
NON-CONTINUOUS	200	1.00	200
POOL EQUIPMENT	16,000	1.00	16,000
MISC. LOADS 2	0	1.00	0
		SIZING LOAD:	53,120
		SIZING LOAD (AMPS):	221

CONNECTED PHASE LOADS		
PHASE	VA	AMPS
A	18,222	152.7
B	19,949	166.2
TOTALS	38,271	159.5

REMARKS:
1. SQUARE D NQ PANELBOARD OR EQUAL.
2. PANELBOARD SHALL BE SUITABLE FOR USE AS SERVICE ENTRANCE EQUIPMENT.

EQUIPMENT FAULT CURRENT RATING SCHEDULE

EQUIPMENT	SCA **	SCCR	NOTES
PANELBOARD CP1	30,907	42,000	1,2
PANELBOARD PP1	15,006	22,000	1

NOTES:
1. RATING BASED ON AN ASSUMED FAULT AT UTILITY CO. TRANSFORMER OF 43,490 AIC.
2. BRANCH BREAKERS IN EQUIPMENT MAY BE SERIES RATED.
** CALCULATIONS PERFORMED USING BUSSMANN POINT-TO-POINT METHOD.

LIGHTING CONTROL PANEL SCHEDULE (LCP1)

RELAY	LOAD DESCRIPTION	CIRCUIT #	NOTES
1	EXTERIOR BUILDING LTS	CP-136	3
2	EXTEIOR PERIMETER SOFFIT LTS	CP1-38	3
3	POOL DECK POST LIGHTS	CP1-34	3
4	TRELLIS LIGHTING	CP1-51	1
5	GRILLE TRELLIS LIGHTING	CP1-49	1
6	POOL LIGHTING CONTACTOR	CP1-44	4
7	CHRISTMAS LIGHT RECEPTACLES WEST	CP1-14	4
8	CHRISTMAS LIGHT RECEPTACLES EAST	CP1-12	4
9	SITE MONUMENT SIGN	CP1-53	4
10	PATIO LIGHTING	CP1-40	3
11	PARKING LOT LIGHTING	CP1-46	3
12			
13			
14			
15			
16			
17			
18			
19			
20			
21			
22			
23			
24			

GENERAL PANEL NOTES:
1 WATTSTOPPER LIGHTING INTEGRATOR SERIES PANEL OR EQUAL.
2 FEED-THROUGH 24-RELAY PANEL.
3 FURNISH WITH OPTIONAL SUB-SECTION FOR LIGHTING CONTACTORS.
4 FURNISH WITH DIVIDERS BETWEEN LOAD TYPES (EM / NORMAL) AND VOLTAGES (277V / 120V)
5 FURNISH IN SURFACE-MOUNTED NEMA 1 ENCLOSURE.

RELAY NOTES:
1 SWITCH AND/OR SENSOR ON / TIMECLOCK OFF (AUTOMATIC BUILDING SHUTOFF AT NIGHT).
2 SWITCH OVERRIDE SENSOR ON/OFF. MAXIMUM OVERRIDE TIME OF 2 HOURS.
3 PHOTOCELL ON / TIMECLOCK OFF.
4 TIMECLOCK ON / TIMECLOCK OFF.
5 WALL SWITCH ON/OFF (AUTOMATIC BUILDING SHUTOFF AT NIGHT).

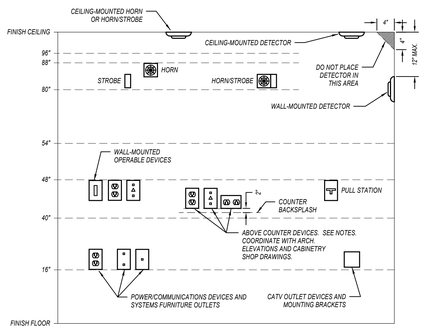

GENERAL NOTES:
1. MOUNTING HEIGHTS SHOWN IN THIS DETAIL ARE TYPICAL UNLESS OTHERWISE NOTED ON THE PLANS.
2. SEE ARCHITECTURAL ELEVATIONS FOR SPECIAL CONDITIONS. NOTIFY ARCHITECT IMMEDIATELY OF ANY CONFLICTS.
3. ALL INSTALLATIONS SHALL COMPLY WITH ADA.

VISUAL FIRE ALARM NOTIFICATION DEVICES (STROBE)
LOCATE DEVICE SO THE BOTTOM OF THE DEVICE IS BETWEEN 80" AND 96" A.F.F. (NFPA) OR 6" BELOW CEILING, WHICHEVER IS LOWER (ADA 2010).

AUDIBLE FIRE ALARM NOTIFICATION DEVICES (HORN)
LOCATE DEVICE SO THAT THE TOP OF UNIT IS NOT MORE THAN 90" A.F.F. AND NOT LESS THAN 6" BELOW CEILING (NFPA)

FIRE ALARM ACTIVATION DEVICES (PULL STATION)
LOCATE FRONT-APPROACH DEVICES SO THAT THE HIGHEST OPERABLE PORTION OF THE DEVICE IS NOT MORE THAN 48" A.F.F (ADA 2010) AND NOT LESS THAN 42" A.F.F. (NFPA).

POWER/COMMUNICATION DEVICES:
OUTLETS SHALL BE LOCATED AT 18" A.F.F. TO THE BOTTOM OF THE BOX. ABOVE COUNTER DEVICES SHALL BE LOCATED AT 2" ABOVE THE BACKSPLASH OF THE COUNTER TO THE BOTTOM OF THE DEVICES. VERIFY WITH ARCHITECTURAL DETAILS.

WALL-MOUNTED OPERABLE DEVICES:
OPERABLE DEVICES SHALL BE LOCATED AT 48" A.F.F. TO THE TOP OF THE OPERABLE PORTION OF THE DEVICE.

WALL-MOUNTED OPERABLE DEVICES INCLUDE, BUT ARE NOT LIMITED TO THE FOLLOWING:
LIGHT SWITCHES, DIMMERS, CONTROLS, ETC.
PUSH BUTTONS
NURSE/PATIENT CALL DEVICES (INLUDING THOSE FOR STAFF USE)
OTHER CONTROL OR "CALL" DEVICES

4 E301 **MOUNTING HEIGHTS FOR WALL-MOUNTED DEVICES**
NOT TO SCALE 601-01

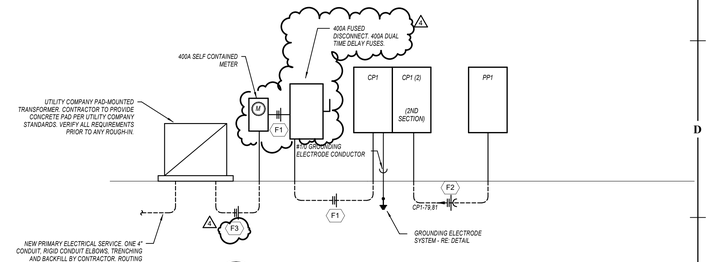

1 E301 **ELECTRICAL RISER DIAGRAM**
NOT TO SCALE

EQUIPMENT FEEDER SCHEDULE

FEEDER NO.	EQUIPMENT	LOAD (AMPS)	FEEDER SETS	# OF WIRES	SIZE	GROUND	MATERIAL	CONDUIT SIZE	TYPE
F1	PANELBOARD CP1	221.3	2	3	250 MCM	-	ALUMINUM	2 1/2"	RNC-40
F2	PANELBOARD PP1	66.7		3	#8		COPPER	1-0"	EMT
F3	METER SOCKET	400.0	1	3	600 MCM	-	COPPER	3"	RNC-40

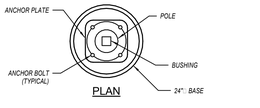

PLAN

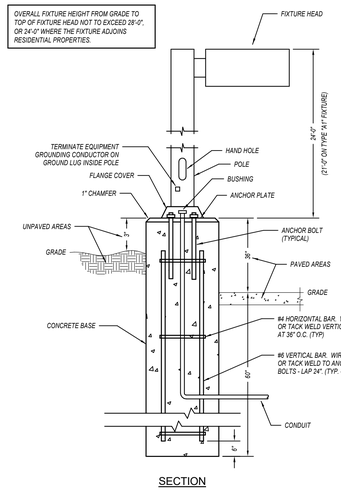

SECTION

5 E301 **POLE BASE DETAIL**
NOT TO SCALE 611-02

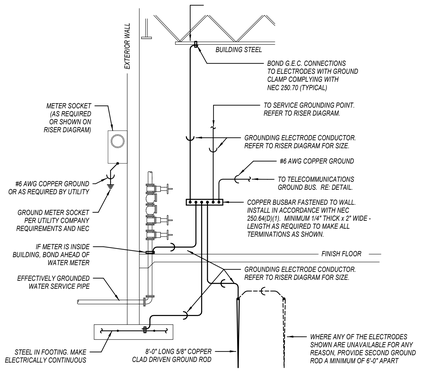

3 E301 **ELECTRICAL SERVICE GROUNDING DETAIL**
NOT TO SCALE 625-01

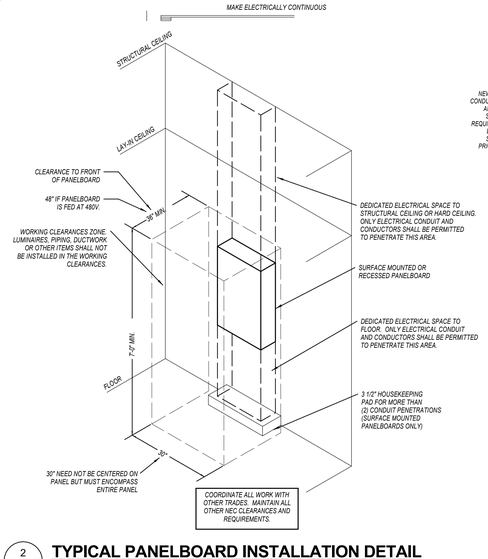

2 E301 **TYPICAL PANELBOARD INSTALLATION DETAIL**
NOT TO SCALE

Joe Frogge

RELEASE FOR CONSTRUCTION AS NOTED ON PLANS REVIEW DEVELOPMENT SERVICES LEE'S SUMMIT, MISSOURI 03/12/2026 4:10:44

collins|webb ARCHITECTURE
307B SW Market St., Lee's Summit, Missouri 64063 | 816.249.2270 | www.collinswebb.com

CONSTRUCTION DRAWINGS

BAILEY FARMS CLUBHOUSE
LEE'S SUMMIT, MO

COPYRIGHT © BY COLLINS WEBB ARCHITECTURE, LLC

REVISION DATES:

1	Revision 1	11/8/2024
4	Owner Changes	3/4/2026

STATE OF MISSOURI
DARREN E. THRASHER
NUMBER PE-2014007277
PROFESSIONAL ENGINEER
03/04/26
Darren E. Thrasher - Engineer
License #PE-2014007277
PROFESSIONAL SEAL

E301

ISSUE DATE: 06/26/2024
COLLINS WEBB #: 23115

ELECTRICAL RISER AND SCHEDULES

pkmr ENGINEERS
PEARSON KENT MCKINLEY RAAF ENGINEERS, LLC
13300 W 98TH STREET LENEXA, KS 66215
913.492.3400 WWW.PKMRENG.COM
MO State Certificate of Authority #E-2002020886

24.046

3/10/2026 1:24:55 PM