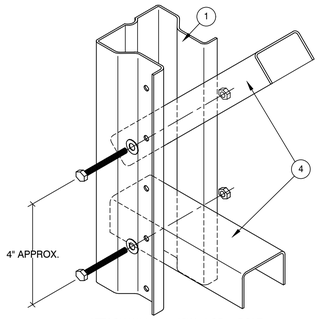

ATTACH W/ (1) 5/16"Ø X 3" GR. 5 BOLT

V-A TYPICAL BRACE TO COLUMN CONNECTION

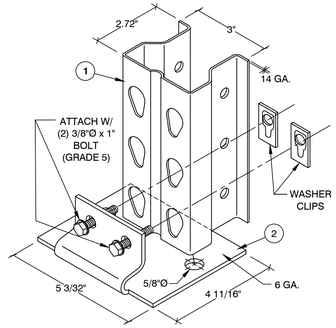

2 BASE PLATE

1 COLUMN

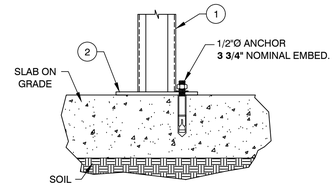

(1) ANCHOR REQ'D PER BASE PLATE

3 ANCHOR

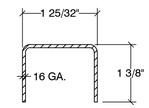

4 HORIZONTAL & DIAGONAL BRACE

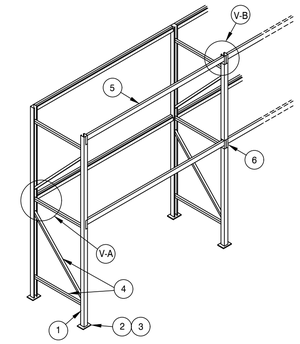

GENERAL CONFIGURATION

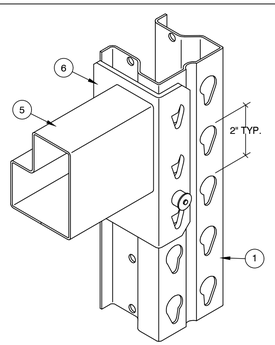

V-B TYPICAL BEAM TO COLUMN CONNECTION

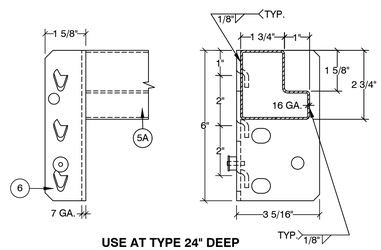

USE AT TYPE 24" DEEP

6 CONNECTOR

5A BEAM

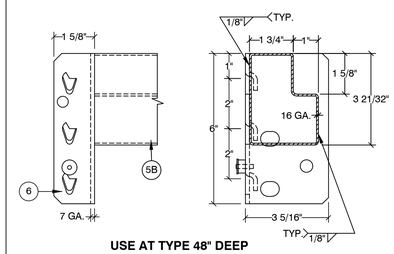

USE AT TYPE 48" DEEP

6 CONNECTOR

5B BEAM

NOTES:

1. DESIGNED PER SECTION 2209 OF THE 2018 IBC.
   S_S = **0.1** S_{DS} = **0.11**
   S_1 = **0.07** S_{D1} = **0.11**
   SEISMIC DESIGN CATEGORY: **B**.
2. STORAGE CAPACITY: TYPE 42" DEEP = **3,600#** PER LEVEL.
   TYPE 24" DEEP = **1,000#** PER LEVEL.
3. STEEL: ASTM **A1011** FOR SHAPE Fy = **55,000** PSI GRADE **55**.
4. ALL BOLTS: **A307** (UNLESS OTHERWISE NOTED).
5. ANCHORS: HILTI KWIK BOLT TZ 2.
6. ANCHORS SHALL BE INSTALLED PER ICC **#ESR-4266**
7. CONCRETE: **6"** THICK x **4,000** PSI.
8. MODULUS OF SUB-GRADE REACTION: **50** PCI.
   (DISTURBED SOIL: **500** PSF)
9. THE MAXIMUM TOP TO BOTTOM OUT-OF-PLUMB RATIO AND OUT-OF-STRAIGHT RATIO RACK COLUMN IS 1/240 (FOR EXAMPLE 1/2" PER 10 FEET OF HEIGHT). COLUMN WHOSE OUT-OF-PLUMB RATIO OR OUT-OF-STRAIGHT RATIO EXCEEDS THIS LIMIT SHALL BE UNLOADED AND RE-PLUMBED. ANY DAMAGED PARTS MUST BE REPAIRED OR REPLACED.
10. THE OWNER SHALL MAINTAIN THE STRUCTURAL INTEGRITY OF THE RACK SYSTEM BY ASSURING PROPER OPERATIONAL, HOUSE KEEPING, AND MAINTENANCE PROCEDURES, BUT NOT LIMITED TO, THE FOLLOWING:
    A) PROHIBIT ANY OVER LOADING OF ANY PALLET POSITIONS AND OF THE OVERALL RACK SYSTEM.
    B) REGULARLY INSPECT FOR DAMAGE. IF DAMAGE IS FOUND, IMMEDIATELY UNLOAD THE AFFECTED AREA AND REPLACE OR REPAIR ANY DAMAGED COLUMNS, BEAMS, OR OTHER STRUCTURAL COMPONENTS.
    C) REQUIRE ALL PALLETS TO BE MAINTAINED IN GOOD, SAFE OPERATING CONDITION.
    D) ENSURE THAT PALLETS ARE PROPERLY PLACED ONTO PALLET LOAD SUPPORT MEMBERS IN PROPERLY STACKED AND STABLE POSITION.
    E) REQUIRE THAT ALL GOODS STORED ON EACH PALLET TO BE PROPERLY STACKED AND STABLE.
    F) PROHIBIT DOUBLE STACKING OF ANY PALLET POSITION, INCLUDING THE TOP MOST POSITION, UNLESS THE RACK SYSTEM IS SPECIFICALLY DESIGNED FOR SUCH LOADING.
    G) ENSURE THAT THE RACKS ARE NOT MODIFIED OR REARRANGED IN A MANNER NOT WITHIN THE ORIGINAL DESIGN CONFIGURATIONS.

TYPE 42" DEEP

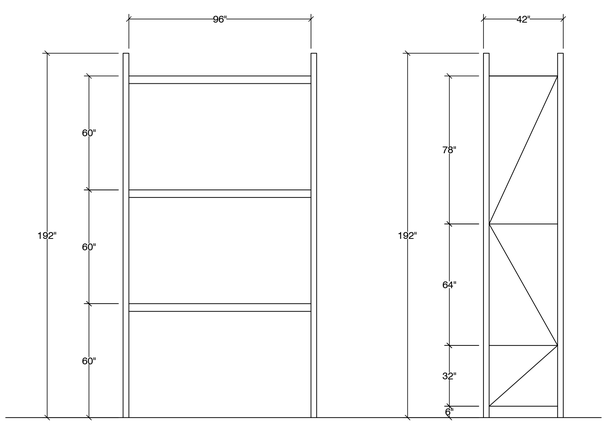

FRONT VIEW SIDE VIEW

TYPE 24" DEEP

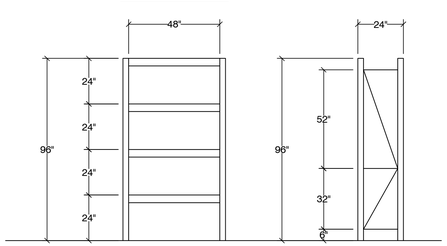

FRONT VIEW SIDE VIEW

STORAGE RACK ELEVATIONS

ADDRESS:
CARRIER ENTERPRISES INC.
648 NE MAGUIRE BLVD.
LEE'S SUMMIT, MO 64064

REV.	DATE	BY	DESCRIPTION

SEIZMIC
EST. 1985
SEIZMIC ENGINEERING, INC.
1130 E. Cypress St.
Covina, California
91724
Tel.(909)869-0989

DRAWN BY:	M.V. / A.T.
DATE:	03/09/26
LAST REV. BY:	
REV. DATE:	
TYPE:	MEC
SCALE:	N.T.S.
APRV'D BY:	SAL E. FATEEN

STATE OF MISSOURI
SAL E. FATEEN
NUMBER
PE-026587
PROFESSIONAL ENGINEER
EXPIRES
12-31-2026

Digitally signed by Sal E. Fateen
Email: sfateen@seizmicinc.com
Date: 2026.03.09 14:37:00 -07'00'
Location: On Source, Inc.
Covina, CA US
Reason: I am the author of this document
Phone: +1 626-967-0100

DESCRIPTION:
STORAGE RACK DETAILS

DRAWING NUMBER:
26-0698-A