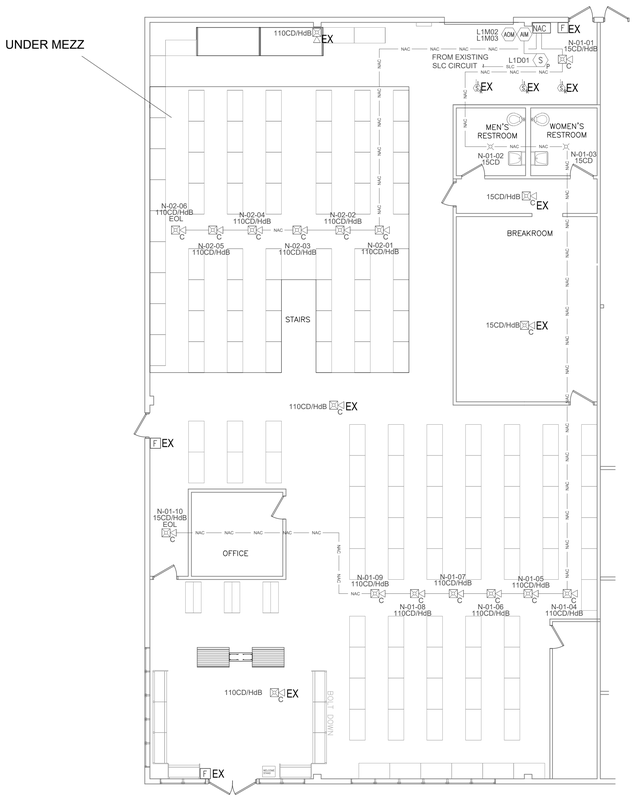

FIRE ALARM SYSTEM PLAN

Scale: 1/8" = 1'-0" 0' 2' 4' 8' 16'

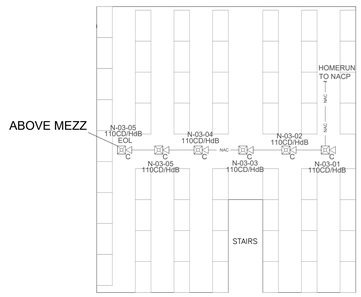

Addressable System Riser

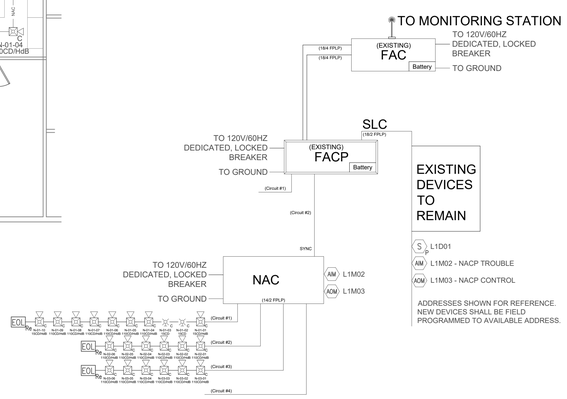

DEVICE INSTALLATION LEGEND

EX - EXISTING TO REMAIN

*ALL DEVICES SHOWN ARE NEW UNLESS OTHERWISE SPECIFIED

CODE INFORMATION

OCCUPANCY CLASS	M
OCCUPANCY LOAD	30 OCCUPANTS
CONSTRUCTION TYPE	II-B
CODE SUMMARY	2018 IBC/IFC, 2017 NEC, 2016 NFPA 72
SPRINKLER	FULLY SPRINKLED
SCOPE OF WORK	EXISTING FIRE ALARM SYSTEM UPDATE FOR TENANT IMPROVEMENT. INSTALL NEW POWER SUPPLY AND HORN/STROBES AS INDICATED. EXISTING FIRE ALARM DEVICES TO REMAIN.
BUILDING HEIGHT	25' - 0"
NUMBER OF FLOORS	1 FLOOR (WITH MEZZANINE)
TENANT AREA (SQ. FT.)	5,782 SQ. FT.

THIS IS FOR REFERENCE ONLY, NOT ALL DEVICES MAY BE SHOWN.

FIRE ALARM MATRIX WITH OCCUPANT NOTIFICATION

SPRINKLER SYSTEM	ANNUNCIATE ALARM SIGNAL AT CONTROL PANEL AND REMOTE ANNUNCIATOR	ANNUNCIATE SUPERVISORY SIGNAL AT CONTROL PANEL AND REMOTE ANNUNCIATOR	ANNUNCIATE TROUBLE SIGNAL AT CONTROL PANEL AND REMOTE ANNUNCIATOR	TRANSMIT ALARM SIGNAL TO CENTRAL STATION	TRANSMIT SUPERVISORY SIGNAL TO CENTRAL STATION	TRANSMIT TROUBLE SIGNAL TO CENTRAL STATION	ACTIVATE INTERIOR HORN/STROBES	ACTIVATE EXTERIOR HORN/STROBE BELL ABOVE FDC	ACTIVATE EXTERIOR HORN/STROBE BELL	SHUTDOWN RTU
- WATERFLOW SWITCH	●			●			●	●	●	
- VALVE TAMPER SWITCH		●			●					
SMOKE DETECTOR	●			●			●		●	
MANUAL PULL STATION	●			●			●		●	
DUCT DETECTOR		●			●					●
POWER SUPPLY - TROUBLE			●			●				
COMMUNICATOR - COMMUNICATION FAIL			●							
COMMUNICATOR - TROUBLE			●			●				
ABNORMAL CONTROL, CIRCUIT OR DEVICE			●			●				
LOSS OF POWER			●			●				

NFPA 72 AND ADA DEVICE INSTALLATION REQUIREMENTS

THIS IS FOR REFERENCE ONLY, NOT ALL DEVICES MAY BE USED, SEE SPECIFICATION IF CONDUIT IS TO BE NEEDED THROUGHOUT.

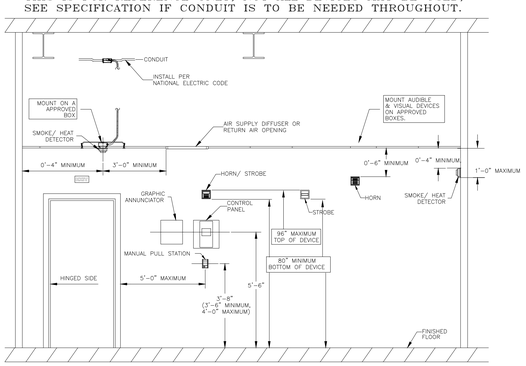

Standby Battery Calculations

FIRELITE
ES-50X

Control/Device/Module Amperage Calculation/Other Powered Device

Part Number	Description	Quantity	Standby Per Device	Current All Devices	Alarm Per Device	Current All Devices
ES-50X	Intelligent Addressable FACP W/ Communicator	1	0.141000	0.141000	0.257000	0.257000
BG-12LX	Addressable Manual Pull Station	4	0.000400	0.001600	0.005000	0.020000
SD365	Addressable Low-Profile Photoelectric Smoke Detector	1	0.000200	0.000200	0.004500	0.004500
MMF-300	Single Monitor Module	7	0.000375	0.002625	0.005000	0.035000
CRF-300	Relay Module	4	0.000300	0.001200	0.006500	0.026000
CMF-300	Control Module	1	0.000400	0.000400	0.000400	0.000400
				0.000000		0.000000
				0.000000		0.000000
				0.000000		0.000000
				0.000000		0.000000
				0.000000		0.000000
				0.000000		0.000000
				0.000000		0.000000
				0.000000		0.000000
				0.000000		0.000000
				0.000000		0.000000
				0.000000	0.200000	0.000000
				0.147	Alarm	0.343
Total Aux current		Maximum Amps:	1.0000			

Signal Circuits Amperage Calculation

Circuit	Device	Quantity		Alarm Per Device	Current All Devices
Circuit 1					0.000
					0.000
					0.000
					0.000
					0.000
					0.000
Total 1		Maximum Amps:	2.5000		0.000
Circuit 2	HPF-PS6	1		0.192	0.192
					0.000
					0.000
					0.000
					0.000
					0.000
Total 2		Maximum Amps:	2.5000		0.192
				Notification Alarm	0.192

Signal Voltage Drop Calculation

	Circuit 1	Circuit 2
Max Wire Run Distance For AWG 14		3265
Actual Wire run Distance		200
Voltage Drop for 14 AWG wire		0.245
Starting Voltage/End of line Voltage: 24.0000		23.76

Voltage Drop = 2 * Wire Run Distance * 3.07 Ohms Per 1000 ft 14 AWG * Total Current for Circuit / 1000

Total panel amperage calculations

Totals				
	Maximum Amps:	3.2500	Total Alarm Amps	0.535

Standby Hours	24
Standby Battery Draw	0.147
Standby Amp Hrs	3.529

Alarm Minutes	5
Alarm Current	0.878
Alarm Current by Minutes	0.073

Battery Size Required with Alarm Time Minutes and 25% Reserve	4.502

Batteries Size Supplied	7	Amp Hours

Voltage drop Calculations & Current Draws for NACP #1

FIRELITE
HPF-PS6

Signal Circuits Amperage Calculation

Device	Current Draw	Circuit #1 Quantity	Circuit #1 Total Current	Circuit #2 Quantity	Circuit #2 Total Current	Circuit #3 Quantity	Circuit #3 Total Current	Circuit #4 Quantity	Circuit #4 Total Current	Circuit #5 Quantity	Circuit #5 Total Current
ELHSRC (15CD)	0.037	2	0.074		0		0		0		0
ELHSRC (110CD)	0.109	6	0.654	6	0.654	6	0.654		0		0
			0		0		0		0		0
ELSTRC (15CD)	0.022	2	0.044		0		0		0		0
			0		0		0		0		0
			0		0		0		0		0
			0		0		0		0		0
			0		0		0		0		0
			0		0		0		0		0
			0		0		0		0		0
			0		0		0		0		0
			0		0		0		0		0
			0		0		0		0		0
			0		0		0		0		0
			0		0		0		0		0
			0		0		0		0		0
			0		0		0		0		0
			0		0		0		0		0
			0		0		0		0		0
			0		0		0		0		0
		Current for Circuit	0.772		0.654		0.654		0		0

Signal Voltage Drop Calculation

Max Wire Run Distance For AWG	812		959		959				
Wire Length Ft for Circuit	280		160		200				
Actual Voltage Drop For Circuit	1.379		0.668		0.835				
End of line Voltage:	22.621		23.332		23.165				

Voltage Drop = 2 * Wire Run Distance * 3.07 Ohms Per 1000 ft 14 AWG * Total Current for Circuit / 1000

Control/Device/Module/Other Powered Device Amperage Calculation

Device	Device Standby Current	Device Alarm Current	Quantity	Total Standby Draw	Total Alarm Draw
HPF-PS6	0.154	0.192	1	0.154	0.192
				0	0
				0	0
				0	0
				0	0
				0	0
				0	0

Max Circuit Amps	Wire Size	Alarm Min	Max Panel Amps	Starting Voltage
3	14	5	6	24.000

Total Battery Calculation Standby:	4.608
Alarm Current Min:	0.189

Standby Hours	24
Alarm Current:	2.272
Battery size Required:	5.996
Batteries Supplied (AH):	7

Battery Size Required with Alarm Time Minutes with Alarm Time Minutes and 25% Reserve.

Fire Alarm Device Legend

Symbol	Qty	Description	Manufacturer/Part Number	Mounting Requirements
FACP	01	Fire Alarm Control Panel	FireLite ES-50X	Surface mounted enclosure provided Top 72" AFF conduit to ceiling
NAC	01	Notification Power Supply	Honeywell HPF-PS6	Surface mounted enclosure provided Top 72" AFF conduit to ceiling
AIM	01	Monitor Module	FireLite MMF-300	Surface mounted enclosure provided Within 3' of Device
AOM	01	Control Module	FireLite CMF-300	Surface mounted enclosure provided Within 3' of Device
S P	01	Smoke Detector Photo Electric	FireLite SD365	Single Gang, 4" Octagon or Square in the ceiling
C	20	Horn/Strobe, Ceiling Candela Indicated	Cooper-Wheelock ELHSRC	Ceiling Mount, Not Higher than 30' AFF 4" Octagon or Square
	02	ADA/Strobe Candela Indicated	Cooper-Wheelock ELSTRC	Ceiling Mount, Not Higher than 30' AFF 4" Octagon or Square

Fire Alarm Wire Legend

Wire Designations	Wire Types
SLC SLC SLC	Signal Line Circuit - 18/2 FPLP (CLASS B)
NAC NAC NAC	Notification Appliance Circuit - 14/2 FPLP (CLASS B)

Device Designation Legend

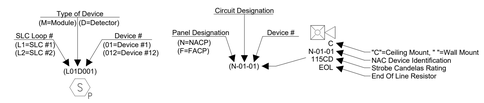

RELEASED FOR CONSTRUCTION
As Noted on Plan Review

Lee's Summit Fire Department
Lee's Summit, Missouri

03/09/2026

MISSOURI PE COA #2009003629

This drawing has been prepared by the Engineer, or under his supervision. This drawing is provided as an instrument of service by the Engineer. It is the property of the Engineer and is to be used for the project only. In accordance with the Architectural Work Copyright Protection Act of 1990, all ideas, designs, arrangements, and plans indicated or represented by this drawing, including the overall form, arrangement and composition of spaces and elements appearing herein, constitute the original, copyrighted work of the Designer/Engineer. Any reproduction, use, or disclosure of information contained herein without prior written consent of the Engineer is strictly prohibited. © 2001 BC Engineers, Inc.

PLAN TYPE:

FIRE ALARM SYSTEM DEVICE LOCATIONS

BC ENGINEERS INCORPORATED
5720 Reeder Shawnee, Ks. 66203 (913)262-1772

ARCHWAY SYSTEMS
17020 E. 40 Hwy. Ste 1
Independence, MO 64055
Office: (816) 709-3358

T&C Fire and Security Systems LLC
4267 Milam Rd
Bates City, MO 64011
816-690-4722

Napa Auto Parts
2321 NE Independence Ave
Lee's Summit, MO 64064

2/19/2026
STATE OF MISSOURI
DARIN T. SEIDEL
NUMBER PE-2009003629
REGISTERED PROFESSIONAL ENGINEER

NO	REVISION	DATE

DATE: 02/18/2026
LAYOUT BY: JOEL DAMMINGA, ET NICET #173432
SCALE: 1/8" = 1'-0"

FA-1 of FA-1