MiTek®

RE: P250555-01
Roof - HM Lot 196

MiTek, Inc.
16023 Swingley Ridge Rd.
Chesterfield, MO 63017
314.434.1200

Site Information:

Customer: Clayton Properties Project Name: P250555-01
Lot/Block: 196 Model: Carolina - Modern Prairie
Address: 1039 SW Fiord Dr. Subdivision: Highland Meadows
City: Lee's Summit State: MO

General Truss Engineering Criteria & Design Loads (Individual Truss Design Drawings Show Special Loading Conditions):

Design Code: IRC2018/TPI2014 Design Program: MiTek 20/20 8.6
Wind Code: ASCE 7-16 Wind Speed: 115 mph
Roof Load: 45.0 psf Floor Load: N/A psf

This package includes 47 individual, dated Truss Design Drawings and 0 Additional Drawings.

No.	Seal#	Truss Name	Date	No.	Seal#	Truss Name	Date
1	I74462328	A6	6/26/2025	21	I74462348	CG1	6/26/2025
2	I74462329	A7	6/26/2025	22	I74462349	CG2	6/26/2025
3	I74462330	A8	6/26/2025	23	I74462350	CG3	6/26/2025
4	I74462331	A9	6/26/2025	24	I74462351	D1	6/26/2025
5	I74462332	A10	6/26/2025	25	I74462352	E1	6/26/2025
6	I74462333	A11	6/26/2025	26	I74462353	E2	6/26/2025
7	I74462334	A12	6/26/2025	27	I74462354	J1	6/26/2025
8	I74462335	A13	6/26/2025	28	I74462355	J2	6/26/2025
9	I74462336	A14	6/26/2025	29	I74462356	J3	6/26/2025
10	I74462337	A15	6/26/2025	30	I74462357	J4	6/26/2025
11	I74462338	A16	6/26/2025	31	I74462358	J6	6/26/2025
12	I74462339	A17	6/26/2025	32	I74462359	J7	6/26/2025
13	I74462340	A18	6/26/2025	33	I74462360	J8	6/26/2025
14	I74462341	B1	6/26/2025	34	I74462361	LG1	6/26/2025
15	I74462342	B2	6/26/2025	35	I74462362	LG2	6/26/2025
16	I74462343	B3	6/26/2025	36	I74462363	LG3	6/26/2025
17	I74462344	B4	6/26/2025	37	I74462364	LG4	6/26/2025
18	I74462345	C1	6/26/2025	38	I74462365	M1	6/26/2025
19	I74462346	C2	6/26/2025	39	I74462366	M2	6/26/2025
20	I74462347	C3	6/26/2025	40	I74462367	M3	6/26/2025

The truss drawing(s) referenced above have been prepared by MiTek USA, Inc under my direct supervision based on the parameters provided by .

Truss Design Engineer's Name: Lu, Jie

My license renewal date for the state of Missouri is December 31, 2026.

Missouri COA: 001193

IMPORTANT NOTE: The seal on these truss component designs is a certification that the engineer named is licensed in the jurisdiction(s) identified and that the designs comply with ANSI/TPI 1. These designs are based upon parameters shown (e.g., loads, supports, dimensions, shapes and design codes), which were given to MiTek. Any project specific information included is for MiTek customers file reference purpose only, and was not taken into account in the preparation of these designs. MiTek has not independently verified the applicability of the design parameters or the designs for any particular building. Before use, the building designer should verify applicability of design parameters and properly incorporate these designs into the overall building design per ANSI/TPI 1, Chapter 2.

STATE OF MISSOURI
JIE LU
NUMBER
PE-029327
PROFESSIONAL ENGINEER

June 26, 2025
Lu, Jie

RELEASE FOR CONSTRUCTION
AS NOTED ON PLANS REVIEW
DEVELOPMENT SERVICES
LEE'S SUMMIT, MISSOURI
08/15/2025 5:17:48

RE: P250555-01 - Roof - HM Lot 196

MiTek, Inc.
16023 Swingley Ridge Rd.
Chesterfield, MO 63017
314.434.1200

Site Information:

Project Customer: Clayton Properties Project Name: P250555-01
Lot/Block: 196 Subdivision: Highland Meadows
Address: 1039 SW Fiord Dr.
City, County: Lee's Summit State: MO

No.	Seal#	Truss Name	Date
41	I74462368	M4	6/26/2025
42	I74462369	M5	6/26/2025
43	I74462370	M6	6/26/2025
44	I74462371	M7	6/26/2025
45	I74462372	M8	6/26/2025
46	I74462373	V1	6/26/2025
47	I74462374	V2	6/26/2025

RELEASE FOR CONSTRUCTION
AS NOTED ON PLANS REVIEW
DEVELOPMENT SERVICES
LEE'S SUMMIT, MISSOURI
08/15/2025 5:17:48

Job	Truss	Truss Type	Qty	Ply	Roof - HM Lot 196
P250555-01	A6	Common	2	1	I74462328 Job Reference (optional)

Premier Building Supply (Springhill, KS), Spring Hills, KS - 66083, Run: 8.63 S Sep 26 2024 Print: 8.630 S Sep 26 2024 MiTek Industries, Inc. Wed Jun 25 09:29:29 Page: 1
ID:gssx3aRENmQB7mKwARHJKMzbfHA-RfC?PsB70Hq3NSgPqnL8w3uITXbGKWrCDoi7J4zJC?f

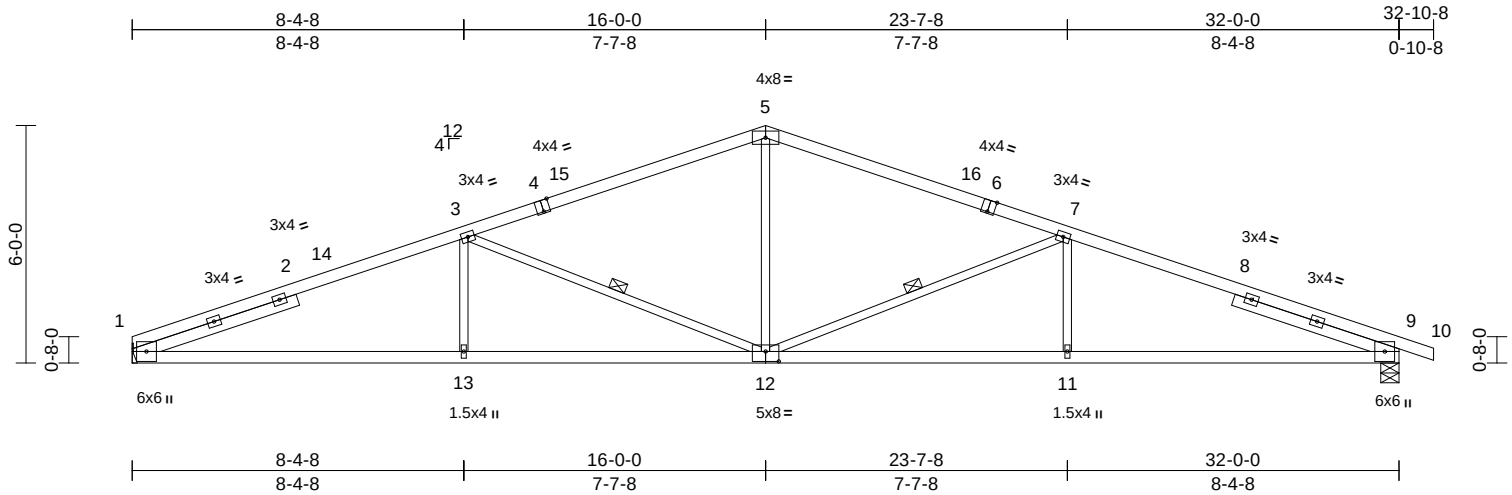

Scale = 1:58.2

Plate Offsets (X, Y): [1:0-3-13,0-1-5], [4:0-2-0,Edge], [6:0-2-0,Edge], [9:0-3-13,0-1-5], [12:0-4-0,0-3-0]

Loading	(psf)	Spacing	2-0-0	CSI		DEFL	in	(loc)	l/defl	L/d	PLATES	GRIP
TCLL (roof)	25.0	Plate Grip DOL	1.15	TC	0.95	Vert(LL)	-0.21	11-12	>999	240	MT20	244/190
TCDL	10.0	Lumber DOL	1.15	BC	0.96	Vert(CT)	-0.42	11-12	>911	180		
BCLL	0.0	Rep Stress Incr	YES	WB	0.64	Horz(CT)	0.15	9	n/a	n/a		
BCDL	10.0	Code	IRC2018/TPI2014	Matrix-S							Weight: 135 lb	FT = 20%

LUMBER
TOP CHORD 2x4 SP 1650F 1.5E *Except* 6-10:2x4 SP No.2
BOT CHORD 2x4 SP No.2
WEBS 2x3 SPF No.2
SLIDER Left 2x4 SP No.2 -- 4-4-9, Right 2x4 SP No.2 -- 4-4-9

BRACING
TOP CHORD Structural wood sheathing directly applied.
BOT CHORD Rigid ceiling directly applied or 2-2-0 oc bracing.
WEBS 1 Row at midpt 7-12, 3-12

REACTIONS (size) 1= Mechanical, 9=0-5-8
Max Horiz 1=109 (LC 12)
Max Uplift 1=-252 (LC 8), 9=-293 (LC 9)
Max Grav 1=1439 (LC 1), 9=1502 (LC 1)

FORCES (lb) - Maximum Compression/Maximum Tension
TOP CHORD 1-3=-3204/749, 3-5=-2272/595, 5-7=-2272/587, 7-9=-3198/727, 9-10=-5/0
BOT CHORD 1-13=-612/2929, 11-13=-612/2929, 9-11=-601/2922
WEBS 5-12=-128/861, 7-12=-987/306, 7-11=0/333, 3-12=-995/308, 3-13=0/336

NOTES
1) Unbalanced roof live loads have been considered for this design.
2) Wind: ASCE 7-16; Vult=115mph (3-second gust) Vasd=91mph; TCDL=6.0psf; BCDL=6.0psf; h=35ft; Ke=1.00; Cat. II; Exp C; Enclosed; MWFRS (envelope) exterior zone and C-C Exterior(2E) 0-0-0 to 5-0-0, Interior (1) 5-0-0 to 16-0-0, Exterior(2R) 16-0-0 to 21-0-0, Interior (1) 21-0-0 to 32-10-8 zone; cantilever left and right exposed ; end vertical left and right exposed;C-C for members and forces & MWFRS for reactions shown; Lumber DOL=1.60 plate grip DOL=1.60
3) This truss has been designed for a 10.0 psf bottom chord live load nonconcurrent with any other live loads.
4) Bearings are assumed to be: , Joint 9 SP No.2 crushing capacity of 565 psi.
5) Refer to girder(s) for truss to truss connections.
6) Provide mechanical connection (by others) of truss to bearing plate capable of withstanding 252 lb uplift at joint 1 and 293 lb uplift at joint 9.
7) This truss is designed in accordance with the 2018 International Residential Code sections R502.11.1 and R802.10.2 and referenced standard ANSI/TPI 1.

LOAD CASE(S) Standard

STATE OF MISSOURI
JIE LU
NUMBER
PE-029327
PROFESSIONAL ENGINEER

June 26,2025

WARNING - Verify design parameters and READ NOTES ON THIS AND INCLUDED MITEK REFERENCE PAGE MII-7473 rev. 1/2/2023 BEFORE USE.
Design valid for use only with MiTek® connectors. This design is based only upon parameters shown, and is for an individual building component, not a truss system. Before use, the building designer must verify the applicability of design parameters and properly incorporate this design into the overall building design. Bracing indicated is to prevent buckling of individual truss web and/or chord members only. Additional temporary and permanent bracing is always required for stability and to prevent collapse with possible personal injury and property damage. For general guidance regarding the fabrication, storage, delivery, erection and bracing of trusses and truss systems, see **ANSI/TPI1 Quality Criteria, and DSB-22** available from Truss Plate Institute (www.tpinst.org) and **BCSI Building Component Safety Information** available from the Structural Building Component Association (www.sbcscomponents.com)

MiTek®
16023 Swingley Ridge Rd
Chesterfield, MO 63017
314.434.1200 / MiTek-US.com

RELEASE FOR CONSTRUCTION
AS NOTED ON PLANS REVIEW
DEVELOPMENT SERVICES
LEE'S SUMMIT, MISSOURI
08/15/2025 5:17:48

Job	Truss	Truss Type	Qty	Ply	Roof - HM Lot 196
P250555-01	A7	Common	1	1	I74462329 Job Reference (optional)

Premier Building Supply (Springhill, KS), Spring Hills, KS - 66083, Run: 8.63 S Sep 26 2024 Print: 8.630 S Sep 26 2024 MiTek Industries, Inc. Wed Jun 25 09:29:29 Page: 1

ID:gssx3aRENmQB7mKwARHJKMzbfHA-RfC?PsB70Hq3NSgPqnL8w3uITXbGKWrCDoi7J4zJC?f

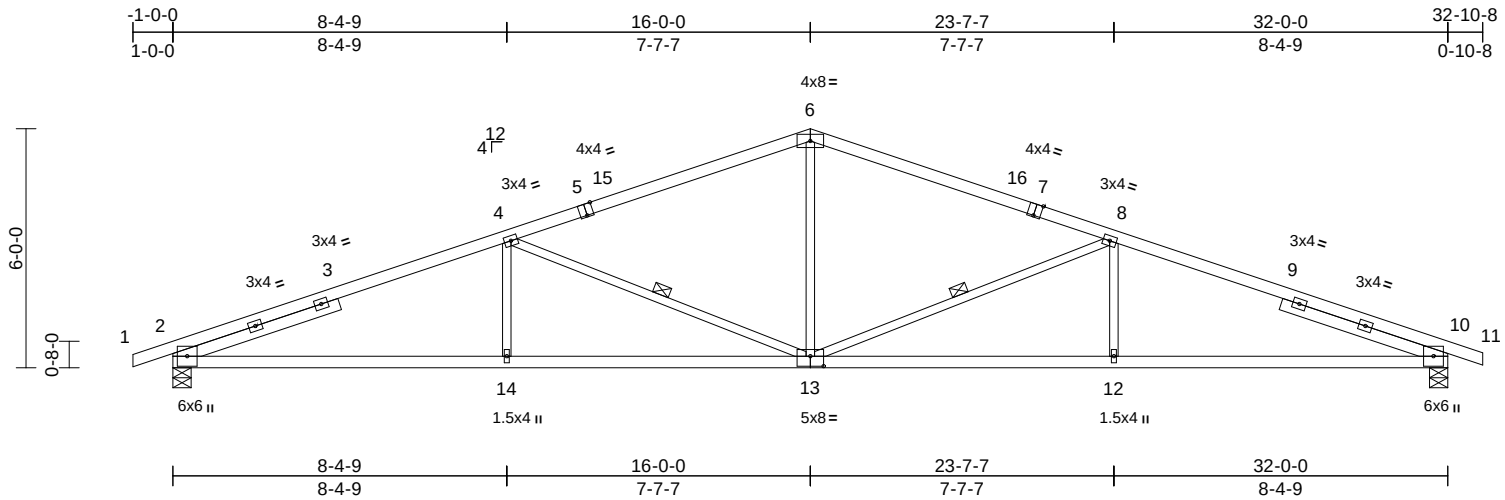

Scale = 1:57.8

Plate Offsets (X, Y): [2:0-3-13,0-1-5], [5:0-2-0,Edge], [7:0-2-0,Edge], [10:0-3-13,0-1-5], [13:0-4-0,0-3-0]

Loading	(psf)	Spacing	2-0-0	CSI		DEFL	in	(loc)	l/defl	L/d	PLATES	GRIP
TCLL (roof)	25.0	Plate Grip DOL	1.15	TC	0.95	Vert(LL)	-0.21	13-14	>999	240	MT20	244/190
TCDL	10.0	Lumber DOL	1.15	BC	0.95	Vert(CT)	-0.42	13-14	>907	180		
BCLL	0.0	Rep Stress Incr	YES	WB	0.63	Horz(CT)	0.15	10	n/a	n/a		
BCDL	10.0	Code	IRC2018/TPI2014	Matrix-S							Weight: 136 lb	FT = 20%

LUMBER

TOP CHORD 2x4 SP 1650F 1.5E *Except* 1-5,7-11:2x4 SP No.2
BOT CHORD 2x4 SP No.2
WEBS 2x3 SPF No.2
SLIDER Left 2x4 SP No.2 -- 4-4-10, Right 2x4 SP No.2 -- 4-4-10

BRACING

TOP CHORD Structural wood sheathing directly applied.
BOT CHORD Rigid ceiling directly applied or 2-2-0 oc bracing.
WEBS 1 Row at midpt 8-13, 4-13

REACTIONS (size) 2=0-5-8, 10=0-5-8
Max Horiz 2=108 (LC 12)
Max Uplift 2=-299 (LC 8), 10=-293 (LC 9)
Max Grav 2=1510 (LC 1), 10=1501 (LC 1)

FORCES (lb) - Maximum Compression/Maximum Tension
TOP CHORD 1-2=-2/0, 2-4=-3193/722, 4-6=-2269/585, 6-8=-2269/586, 8-10=-3194/724, 10-11=-5/0
BOT CHORD 2-14=-590/2917, 12-14=-593/2918, 10-12=-593/2918
WEBS 6-13=-121/858, 8-13=-987/306, 8-12=0/333, 4-13=-985/305, 4-14=0/333

NOTES

1) Unbalanced roof live loads have been considered for this design.
2) Wind: ASCE 7-16; Vult=115mph (3-second gust) Vasd=91mph; TCDL=6.0psf; BCDL=6.0psf; h=35ft; Ke=1.00; Cat. II; Exp C; Enclosed; MWFRS (envelope) exterior zone and C-C Exterior(2E) -1-0-0 to 4-0-0, Interior (1) 4-0-0 to 16-0-0, Exterior(2R) 16-0-0 to 21-0-0, Interior (1) 21-0-0 to 32-10-8 zone; cantilever left and right exposed ; end vertical left and right exposed;C-C for members and forces & MWFRS for reactions shown; Lumber DOL=1.60 plate grip DOL=1.60
3) This truss has been designed for a 10.0 psf bottom chord live load nonconcurrent with any other live loads.
4) All bearings are assumed to be SP No.2 crushing capacity of 565 psi.
5) Provide mechanical connection (by others) of truss to bearing plate capable of withstanding 299 lb uplift at joint 2 and 293 lb uplift at joint 10.
6) This truss is designed in accordance with the 2018 International Residential Code sections R502.11.1 and R802.10.2 and referenced standard ANSI/TPI 1.

LOAD CASE(S) Standard

STATE OF MISSOURI
JIE LU
NUMBER
PE-029327
PROFESSIONAL ENGINEER

June 26,2025

WARNING - Verify design parameters and READ NOTES ON THIS AND INCLUDED MITEK REFERENCE PAGE MII-7473 rev. 1/2/2023 BEFORE USE.
Design valid for use only with MiTek® connectors. This design is based only upon parameters shown, and is for an individual building component, not a truss system. Before use, the building designer must verify the applicability of design parameters and properly incorporate this design into the overall building design. Bracing indicated is to prevent buckling of individual truss web and/or chord members only. Additional temporary and permanent bracing is always required for stability and to prevent collapse with possible personal injury and property damage. For general guidance regarding the fabrication, storage, delivery, erection and bracing of trusses and truss systems, see **ANSI/TPI1 Quality Criteria, and DSB-22** available from Truss Plate Institute (www.tpinst.org) and **BCSI Building Component Safety Information** available from the Structural Building Component Association (www.sbcscomponents.com)

MiTek®
16023 Swingley Ridge Rd
Chesterfield, MO 63017
314.434.1200 / MiTek-US.com

RELEASE FOR CONSTRUCTION
AS NOTED ON PLANS REVIEW
DEVELOPMENT SERVICES
LEE'S SUMMIT, MISSOURI
08/15/2025 5:17:48

Job	Truss	Truss Type	Qty	Ply	Roof - HM Lot 196
P250555-01	A8	Roof Special	1	1	I74462330 Job Reference (optional)

Premier Building Supply (Springhill, KS), Spring Hills, KS - 66083, Run: 8.63 S Sep 26 2024 Print: 8.630 S Sep 26 2024 MiTek Industries, Inc. Wed Jun 25 09:29:30 Page: 1
ID:5i3VGQhngvxLXrsmLee?8azbfGs-RfC?PsB70Hq3NSgPqnL8w3uITXbGKWrCDoi7J4zJC?f

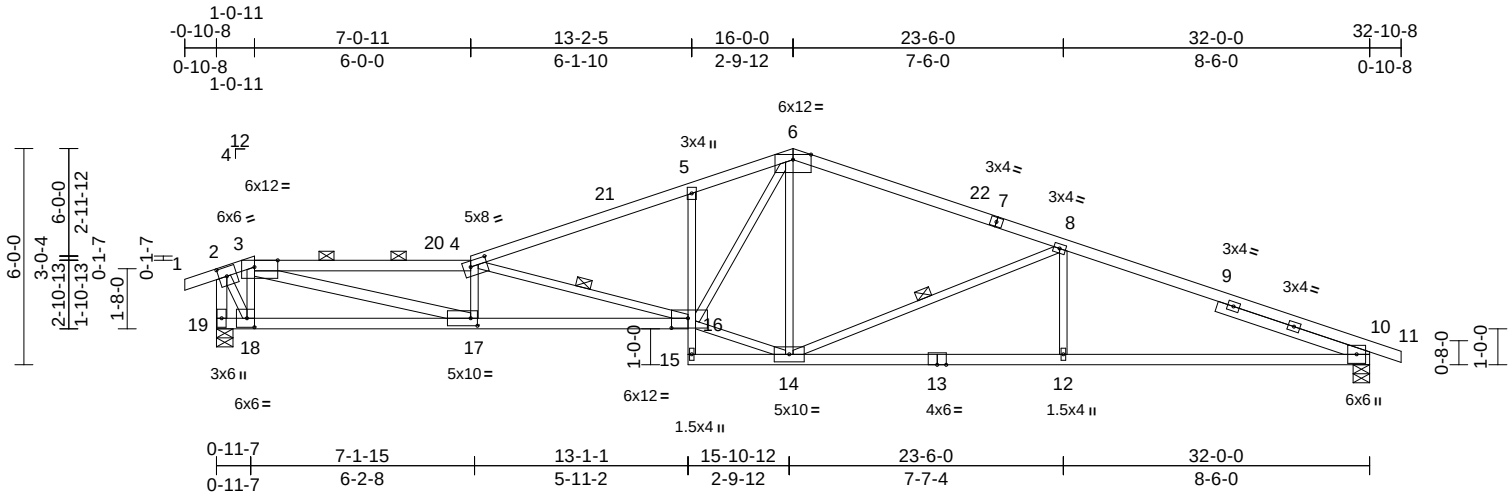

Scale = 1:63.9

Plate Offsets (X, Y): [2:0-2-11,0-3-0], [3:0-7-12,Edge], [4:0-5-8,0-2-0], [10:0-3-13,0-1-5], [16:0-5-8,0-3-4], [17:0-2-4,0-2-8], [18:0-2-8,0-3-0]

Loading	(psf)	Spacing	2-0-0	CSI		DEFL	in	(loc)	l/defl	L/d	PLATES	GRIP
TCLL (roof)	25.0	Plate Grip DOL	1.15	TC	0.97	Vert(LL)	-0.39	16-17	>992	240	MT20	197/144
TCDL	10.0	Lumber DOL	1.15	BC	0.95	Vert(CT)	-0.72	16-17	>528	180		
BCLL	0.0	Rep Stress Incr	YES	WB	0.97	Horz(CT)	0.16	10	n/a	n/a		
BCDL	10.0	Code	IRC2018/TPI2014	Matrix-S							Weight: 149 lb	FT = 20%

LUMBER

TOP CHORD 2x4 SP 1650F 1.5E *Except* 1-3,7-11:2x4 SP No.2
BOT CHORD 2x4 SP No.2 *Except* 19-16:2x4 SP 1650F 1.5E, 5-15:2x3 SPF No.2
WEBS 2x3 SPF No.2 *Except* 17-3,19-2:2x4 SP No.2
SLIDER Right 2x4 SP No.2 -- 4-5-6

BRACING

TOP CHORD Structural wood sheathing directly applied or 2-2-0 oc purlins, except end verticals, and 2-0-0 oc purlins (2-2-0 max.): 3-4.
BOT CHORD Rigid ceiling directly applied or 2-2-0 oc bracing.
WEBS 1 Row at midpt 4-16, 8-14

REACTIONS (size) 10=0-5-8, 19=0-5-8
Max Horiz 19=-128 (LC 13)
Max Uplift 10=-291 (LC 9), 19=-301 (LC 8)
Max Grav 10=1494 (LC 1), 19=1505 (LC 1)

FORCES (lb) - Maximum Compression/Maximum Tension
TOP CHORD 1-2=0/23, 2-3=-836/200, 3-4=-4719/1117, 4-5=-3216/775, 5-6=-3141/838, 6-8=-2228/582, 8-10=-3172/724, 10-11=-5/0, 2-19=-1604/418
BOT CHORD 18-19=-31/139, 17-18=-140/897, 16-17=-971/4659, 15-16=-1/4, 5-16=-339/200, 14-15=-35/50, 12-14=-596/2898, 10-12=-596/2898
WEBS 3-18=-1166/389, 3-17=-916/3962, 4-17=-963/335, 4-16=-1737/431, 6-16=-445/1806, 2-18=-370/1576, 6-14=-260/112, 14-16=-331/2106, 8-12=0/344, 8-14=-992/301

NOTES

1) Unbalanced roof live loads have been considered for this design.
2) Wind: ASCE 7-16; Vult=115mph (3-second gust) Vasd=91mph; TCDL=6.0psf; BCDL=6.0psf; h=35ft; Ke=1.00; Cat. II; Exp C; Enclosed; MWFRS (envelope) exterior zone and C-C Exterior(2E) -0-10-8 to 6-0-11, Interior (1) 6-0-11 to 16-0-0, Exterior(2R) 16-0-0 to 21-0-0, Interior (1) 21-0-0 to 32-10-8 zone; cantilever left and right exposed ; end vertical left and right exposed;C-C for members and forces & MWFRS for reactions shown; Lumber DOL=1.60 plate grip DOL=1.60
3) Provide adequate drainage to prevent water ponding.
4) This truss has been designed for a 10.0 psf bottom chord live load nonconcurrent with any other live loads.
5) Bearings are assumed to be: Joint 19 SP 1650F 1.5E crushing capacity of 565 psi, Joint 10 SP No.2 crushing capacity of 565 psi.
6) Provide mechanical connection (by others) of truss to bearing plate capable of withstanding 301 lb uplift at joint 19 and 291 lb uplift at joint 10.
7) This truss is designed in accordance with the 2018 International Residential Code sections R502.11.1 and R802.10.2 and referenced standard ANSI/TPI 1.
8) Graphical purlin representation does not depict the size or the orientation of the purlin along the top and/or bottom chord.

LOAD CASE(S) Standard

June 26,2025

WARNING - Verify design parameters and READ NOTES ON THIS AND INCLUDED MITEK REFERENCE PAGE MII-7473 rev. 1/2/2023 BEFORE USE.
Design valid for use only with MiTek® connectors. This design is based only upon parameters shown, and is for an individual building component, not a truss system. Before use, the building designer must verify the applicability of design parameters and properly incorporate this design into the overall building design. Bracing indicated is to prevent buckling of individual truss web and/or chord members only. Additional temporary and permanent bracing is always required for stability and to prevent collapse with possible personal injury and property damage. For general guidance regarding the fabrication, storage, delivery, erection and bracing of trusses and truss systems, see **ANSI/TPI1 Quality Criteria, and DSB-22** available from Truss Plate Institute (www.tpinst.org) and **BCSI Building Component Safety Information** available from the Structural Building Component Association (www.sbcscomponents.com)

MiTek®
16023 Swingley Ridge Rd
Chesterfield, MO 63017
314.434.1200 / MiTek-US.com

RELEASE FOR CONSTRUCTION
AS NOTED ON PLANS REVIEW
DEVELOPMENT SERVICES
LEE'S SUMMIT, MISSOURI
08/15/2025 5:17:48

Job	Truss	Truss Type	Qty	Ply	Roof - HM Lot 196
P250555-01	A9	Roof Special	1	1	I74462331 Job Reference (optional)

Premier Building Supply (Springhill, KS), Spring Hills, KS - 66083,

Run: 8.63 S Sep 26 2024 Print: 8.630 S Sep 26 2024 MiTek Industries, Inc. Wed Jun 25 09:29:30 Page: 1
ID:dWV724g9vbpUvhHanx7mcMzbfGt-RfC?PsB70Hq3NSgPqnL8w3uITXbGKWrCDoi7J4zJC?f

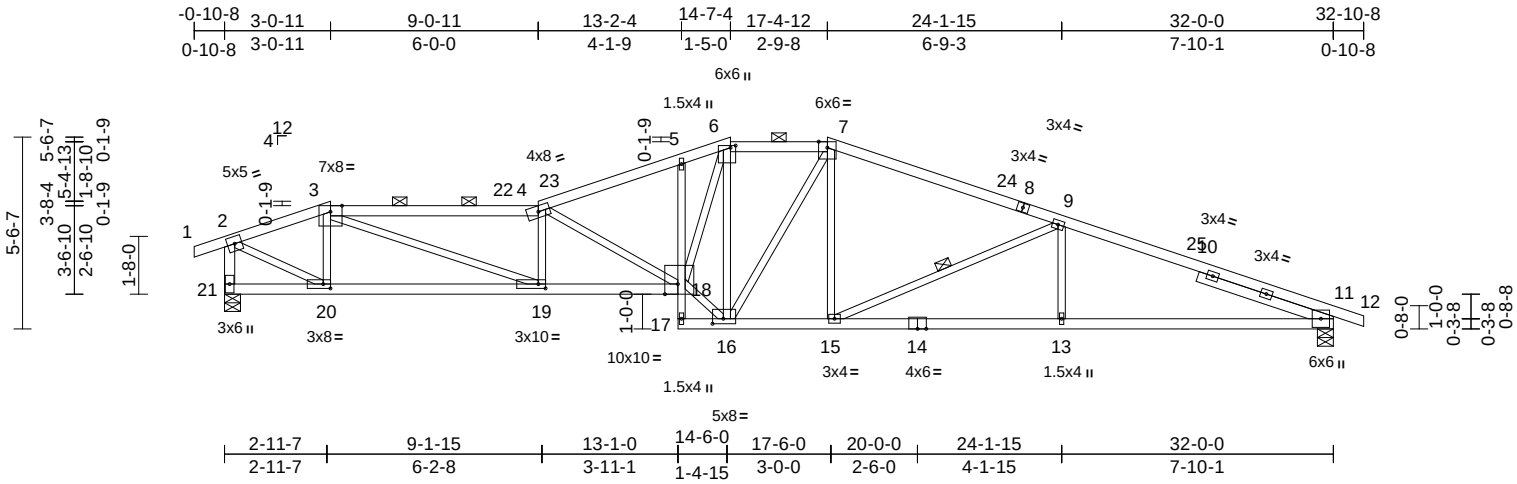

Scale = 1:66.5

Plate Offsets (X, Y): [6:0-0-12,0-1-12], [11:0-3-13,0-1-5], [16:0-3-12,0-1-12], [18:0-4-8,Edge], [19:0-2-8,0-1-8], [20:0-2-8,0-1-8]

Loading	(psf)	Spacing	2-0-0	CSI		DEFL	in	(loc)	l/defl	L/d	PLATES	GRIP
TCLL (roof)	25.0	Plate Grip DOL	1.15	TC	0.90	Vert(LL)	-0.31	18-19	>999	240	MT20	197/144
TCDL	10.0	Lumber DOL	1.15	BC	0.90	Vert(CT)	-0.57	18-19	>669	180		
BCLL	0.0	Rep Stress Incr	YES	WB	0.96	Horz(CT)	0.16	11	n/a	n/a		
BCDL	10.0	Code	IRC2018/TPI2014	Matrix-S							Weight: 151 lb	FT = 20%

LUMBER

TOP CHORD 2x4 SP No.2 *Except* 3-4,7-8:2x4 SP 1650F 1.5E
BOT CHORD 2x4 SP No.2 *Except* 21-18:2x4 SP 1650F 1.5E, 5-17:2x3 SPF No.2
WEBS 2x3 SPF No.2 *Except* 21-2:2x4 SP No.2
SLIDER Right 2x4 SP No.2 -- 4-1-3

BRACING

TOP CHORD Structural wood sheathing directly applied or 2-11-8 oc purlins, except end verticals, and 2-0-0 oc purlins (2-2-0 max.): 3-4, 6-7.
BOT CHORD Rigid ceiling directly applied or 6-0-0 oc bracing.
WEBS 1 Row at midpt 9-15

REACTIONS (size) 11=0-5-8, 21=0-5-8
Max Horiz 21=-118 (LC 13)
Max Uplift 11=-299 (LC 9), 21=-311 (LC 8)
Max Grav 11=1494 (LC 1), 21=1505 (LC 1)

FORCES (lb) - Maximum Compression/Maximum Tension
TOP CHORD 1-2=0/23, 2-3=-1764/473, 3-4=-4011/1062, 4-5=-3149/856, 5-6=-3037/871, 6-7=-2194/678, 7-9=-2417/685, 9-11=-3194/794, 11-12=-5/0, 2-21=-1497/476
BOT CHORD 20-21=-44/129, 19-20=-335/1692, 18-19=-898/3976, 17-18=-10/13, 5-18=-44/98, 16-17=-33/130, 15-16=-465/2219, 13-15=-667/2917, 11-13=-667/2917
WEBS 3-20=-704/272, 3-19=-617/2481, 4-19=-786/294, 4-18=-1204/322, 16-18=-519/2560, 6-18=-545/2297, 6-16=-1434/324, 7-16=-241/170, 7-15=-43/419, 9-15=-806/261, 9-13=0/311, 2-20=-464/1834

NOTES

1) Unbalanced roof live loads have been considered for this design.
2) Wind: ASCE 7-16; Vult=115mph (3-second gust) Vasd=91mph; TCDL=6.0psf; BCDL=6.0psf; h=35ft; Ke=1.00; Cat. II; Exp C; Enclosed; MWFRS (envelope) exterior zone and C-C Exterior(2E) -0-10-8 to 3-0-11, Exterior(2R) 3-0-11 to 8-0-11, Interior (1) 8-0-11 to 14-7-4, Exterior(2E) 14-7-4 to 17-4-12, Exterior(2R) 17-4-12 to 22-4-12, Interior (1) 22-4-12 to 32-10-8 zone; cantilever left and right exposed ; end vertical left and right exposed;C-C for members and forces & MWFRS for reactions shown; Lumber DOL=1.60 plate grip DOL=1.60
3) Provide adequate drainage to prevent water ponding.
4) This truss has been designed for a 10.0 psf bottom chord live load nonconcurrent with any other live loads.
5) Bearings are assumed to be: Joint 21 SP 1650F 1.5E crushing capacity of 565 psi, Joint 11 SP No.2 crushing capacity of 565 psi.
6) Provide mechanical connection (by others) of truss to bearing plate capable of withstanding 311 lb uplift at joint 21 and 299 lb uplift at joint 11.
7) This truss is designed in accordance with the 2018 International Residential Code sections R502.11.1 and R802.10.2 and referenced standard ANSI/TPI 1.
8) Graphical purlin representation does not depict the size or the orientation of the purlin along the top and/or bottom chord.

LOAD CASE(S) Standard

June 26,2025

WARNING - Verify design parameters and READ NOTES ON THIS AND INCLUDED MITEK REFERENCE PAGE MII-7473 rev. 1/2/2023 BEFORE USE.
Design valid for use only with MiTek® connectors. This design is based only upon parameters shown, and is for an individual building component, not a truss system. Before use, the building designer must verify the applicability of design parameters and properly incorporate this design into the overall building design. Bracing indicated is to prevent buckling of individual truss web and/or chord members only. Additional temporary and permanent bracing is always required for stability and to prevent collapse with possible personal injury and property damage. For general guidance regarding the fabrication, storage, delivery, erection and bracing of trusses and truss systems, see **ANSI/TPI1 Quality Criteria, and DSB-22** available from Truss Plate Institute (www.tpinst.org) and **BCSI Building Component Safety Information** available from the Structural Building Component Association (www.sbcscomponents.com)

MiTek®
16023 Swingley Ridge Rd
Chesterfield, MO 63017
314.434.1200 / MiTek-US.com

RELEASE FOR CONSTRUCTION
AS NOTED ON PLANS REVIEW
DEVELOPMENT SERVICES
LEE'S SUMMIT, MISSOURI
08/15/2025 5:17:48

Job	Truss	Truss Type	Qty	Ply	Roof - HM Lot 196
P250555-01	A10	Roof Special	1	1	I74462332 Job Reference (optional)

Premier Building Supply (Springhill, KS), Spring Hills, KS - 66083, Run: 8.63 S Sep 26 2024 Print: 8.630 S Sep 26 2024 MiTek Industries, Inc. Wed Jun 25 09:29:30 Page: 1

ID:8JxkrkfW8IhdHXiODDcX39zbfGu-RfC?PsB70Hq3NSgPqnL8w3uITXbGKWrCDoi7J4zJC?f

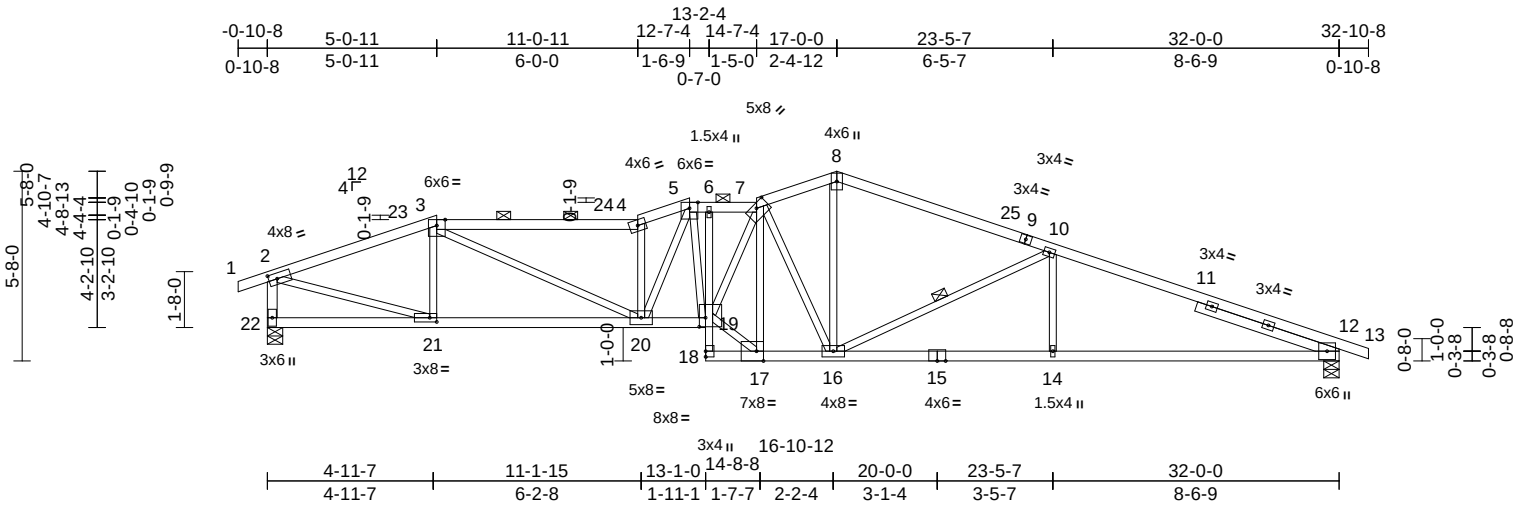

Scale = 1:68.8

Plate Offsets (X, Y): [2:0-3-0,0-2-0], [7:0-4-0,0-1-8], [12:0-3-13,0-1-5], [17:0-2-8,Edge], [19:0-2-4,0-3-4], [21:0-2-8,0-1-8]

Loading	(psf)	Spacing	2-0-0	CSI		DEFL	in	(loc)	l/defl	L/d	PLATES	GRIP
TCLL (roof)	25.0	Plate Grip DOL	1.15	TC	0.82	Vert(LL)	-0.27	19-20	>999	240	MT20	197/144
TCDL	10.0	Lumber DOL	1.15	BC	0.96	Vert(CT)	-0.49	19-20	>784	180		
BCLL	0.0	Rep Stress Incr	YES	WB	0.99	Horz(CT)	0.14	12	n/a	n/a		
BCDL	10.0	Code	IRC2018/TPI2014	Matrix-S							Weight: 155 lb	FT = 20%

LUMBER

TOP CHORD 2x4 SP No.2 *Except* 3-4:2x4 SP 1650F 1.5E

BOT CHORD 2x4 SP No.2 *Except* 6-18:2x3 SPF No.2

WEBS 2x3 SPF No.2 *Except* 22-2:2x4 SP No.2

SLIDER Right 2x4 SP No.2 -- 4-5-11

BRACING

TOP CHORD Structural wood sheathing directly applied or 2-2-0 oc purlins, except end verticals, and 2-0-0 oc purlins (2-8-10 max.): 3-4, 5-7.

BOT CHORD Rigid ceiling directly applied or 2-2-0 oc bracing.

WEBS 1 Row at midpt 10-16

REACTIONS (size) 12=0-5-8, 22=0-5-8

Max Horiz 22=-122 (LC 13)

Max Uplift 12=-277 (LC 9), 22=-308 (LC 8)

Max Grav 12=1494 (LC 1), 22=1505 (LC 1)

FORCES (lb) - Maximum Compression/Maximum Tension

TOP CHORD 1-2=0/23, 2-3=-2172/594, 3-4=-3482/969, 4-5=-3605/1013, 5-6=-3154/896, 6-7=-3145/896, 7-8=-2295/693, 8-10=-2325/666, 10-12=-3154/779, 12-13=-5/0, 2-22=-1459/498

BOT CHORD 21-22=-32/164, 20-21=-424/2032, 19-20=-693/3141, 18-19=0/35, 6-19=0/44, 17-18=-26/143, 16-17=-553/2511, 14-16=-648/2878, 12-14=-648/2878

WEBS 3-21=-445/212, 3-20=-408/1614, 4-20=-1295/440, 17-19=-640/2877, 7-19=-361/1588, 7-17=-1540/355, 2-21=-485/1991, 8-16=-267/1137, 7-16=-785/251, 10-14=0/332, 10-16=-886/269, 5-20=-212/765, 5-19=-64/151

NOTES

1) Unbalanced roof live loads have been considered for this design.
2) Wind: ASCE 7-16; Vult=115mph (3-second gust) Vasd=91mph; TCDL=6.0psf; BCDL=6.0psf; h=35ft; Ke=1.00; Cat. II; Exp C; Enclosed; MWFRS (envelope) exterior zone and C-C Exterior(2E) -0-10-8 to 4-1-8, Interior (1) 4-1-8 to 5-0-11, Exterior(2R) 5-0-11 to 10-0-11, Interior (1) 10-0-11 to 12-7-4, Exterior(2E) 12-7-4 to 14-7-4, Interior (1) 14-7-4 to 17-0-0, Exterior (2R) 17-0-0 to 22-0-0, Interior (1) 22-0-0 to 32-10-8 zone; cantilever left and right exposed ; end vertical left and right exposed;C-C for members and forces & MWFRS for reactions shown; Lumber DOL=1.60 plate grip DOL=1.60
3) Provide adequate drainage to prevent water ponding.
4) This truss has been designed for a 10.0 psf bottom chord live load nonconcurrent with any other live loads.
5) All bearings are assumed to be SP No.2 crushing capacity of 565 psi.
6) Provide mechanical connection (by others) of truss to bearing plate capable of withstanding 308 lb uplift at joint 22 and 277 lb uplift at joint 12.
7) This truss is designed in accordance with the 2018 International Residential Code sections R502.11.1 and R802.10.2 and referenced standard ANSI/TPI 1.
8) Graphical purlin representation does not depict the size or the orientation of the purlin along the top and/or bottom chord.

LOAD CASE(S) Standard

STATE OF MISSOURI
JIE LU
NUMBER
PE-029327
PROFESSIONAL ENGINEER

June 26,2025

WARNING - Verify design parameters and READ NOTES ON THIS AND INCLUDED MITEK REFERENCE PAGE MII-7473 rev. 1/2/2023 BEFORE USE.
Design valid for use only with MiTek® connectors. This design is based only upon parameters shown, and is for an individual building component, not a truss system. Before use, the building designer must verify the applicability of design parameters and properly incorporate this design into the overall building design. Bracing indicated is to prevent buckling of individual truss web and/or chord members only. Additional temporary and permanent bracing is always required for stability and to prevent collapse with possible personal injury and property damage. For general guidance regarding the fabrication, storage, delivery, erection and bracing of trusses and truss systems, see **ANSI/TPI1 Quality Criteria, and DSB-22** available from Truss Plate Institute (www.tpinst.org) and **BCSI Building Component Safety Information** available from the Structural Building Component Association (www.sbcscomponents.com)

MiTek®
16023 Swingley Ridge Rd
Chesterfield, MO 63017
314.434.1200 / MiTek-US.com

RELEASE FOR CONSTRUCTION
AS NOTED ON PLANS REVIEW
DEVELOPMENT SERVICES
LEE'S SUMMIT, MISSOURI
08/15/2025 5:17:48

Job	Truss	Truss Type	Qty	Ply	Roof - HM Lot 196
P250555-01	A11	Roof Special	1	1	I74462333 Job Reference (optional)

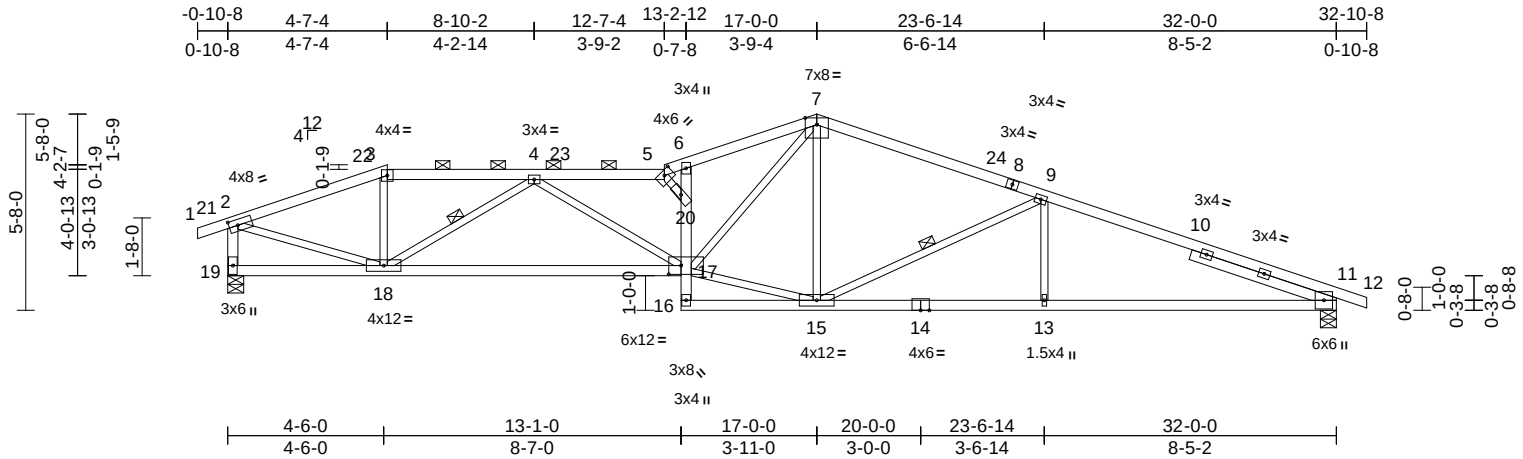

Scale = 1:66.5

Plate Offsets (X, Y): [2:0-3-0,0-2-0], [5:0-3-0,0-1-8], [11:0-3-13,0-1-5], [17:0-4-4,0-3-0]

Loading	(psf)	Spacing	2-0-0	CSI		DEFL	in	(loc)	l/defl	L/d	PLATES	GRIP
TCLL (roof)	25.0	Plate Grip DOL	1.15	TC	0.95	Vert(LL)	-0.30	20	>999	240	MT20	197/144
TCDL	10.0	Lumber DOL	1.15	BC	0.96	Vert(CT)	-0.60	17-18	>640	180		
BCLL	0.0	Rep Stress Incr	YES	WB	0.69	Horz(CT)	0.15	11	n/a	n/a		
BCDL	10.0	Code	IRC2018/TPI2014	Matrix-S							Weight: 148 lb	FT = 20%

LUMBER

TOP CHORD 2x4 SP No.2
BOT CHORD 2x4 SP 1650F 1.5E *Except* 16-14,14-11:2x4 SP No.2
WEBS 2x3 SPF No.2 *Except* 19-2:2x4 SP No.2
SLIDER Right 2x4 SP No.2 -- 4-4-14

BRACING

TOP CHORD Structural wood sheathing directly applied, except end verticals, and 2-0-0 oc purlins (2-4-7 max.): 3-5.
BOT CHORD Rigid ceiling directly applied or 2-2-0 oc bracing.
WEBS 1 Row at midpt 4-18, 9-15

REACTIONS (size) 11=0-5-8, 19=0-5-8
Max Horiz 19=-122 (LC 13)
Max Uplift 11=-278 (LC 9), 19=-308 (LC 8)
Max Grav 11=1494 (LC 1), 19=1505 (LC 1)

FORCES (lb) - Maximum Compression/Maximum Tension
TOP CHORD 1-2=0/23, 2-3=-2106/527, 3-4=-1944/527, 4-5=-3876/974, 5-6=-3197/800, 6-7=-3693/971, 7-9=-2338/629, 9-11=-3163/746, 11-12=-5/0, 2-19=-1478/468
BOT CHORD 18-19=-36/148, 17-18=-733/3257, 16-17=0/61, 17-20=-1342/425, 6-20=-238/157, 15-16=-136/420, 13-15=-618/2887, 11-13=-618/2887
WEBS 3-18=-16/388, 7-17=-483/2019, 2-18=-423/1962, 7-15=-100/148, 15-17=-273/1784, 4-18=-1561/449, 4-17=-113/729, 9-13=0/325, 9-15=-884/271, 5-20=-1428/364

NOTES

1) Unbalanced roof live loads have been considered for this design.
2) Wind: ASCE 7-16; Vult=115mph (3-second gust) Vasd=91mph; TCDL=6.0psf; BCDL=6.0psf; h=35ft; Ke=1.00; Cat. II; Exp C; Enclosed; MWFRS (envelope) exterior zone and C-C Exterior(2E) -0-10-8 to 4-1-8, Interior (1) 4-1-8 to 4-7-4, Exterior(2R) 4-7-4 to 9-7-4, Interior (1) 9-7-4 to 17-0-0, Exterior(2R) 17-0-0 to 22-0-0, Interior (1) 22-0-0 to 32-10-8 zone; cantilever left and right exposed ; end vertical left and right exposed;C-C for members and forces & MWFRS for reactions shown; Lumber DOL=1.60 plate grip DOL=1.60
3) Provide adequate drainage to prevent water ponding.
4) This truss has been designed for a 10.0 psf bottom chord live load nonconcurrent with any other live loads.
5) Bearings are assumed to be: Joint 19 SP 1650F 1.5E crushing capacity of 565 psi, Joint 11 SP No.2 crushing capacity of 565 psi.
6) Provide mechanical connection (by others) of truss to bearing plate capable of withstanding 308 lb uplift at joint 19 and 278 lb uplift at joint 11.
7) This truss is designed in accordance with the 2018 International Residential Code sections R502.11.1 and R802.10.2 and referenced standard ANSI/TPI 1.
8) Graphical purlin representation does not depict the size or the orientation of the purlin along the top and/or bottom chord.

LOAD CASE(S) Standard

STATE OF MISSOURI
JIE LU
NUMBER
PE-029327
PROFESSIONAL ENGINEER

June 26,2025

WARNING - Verify design parameters and READ NOTES ON THIS AND INCLUDED MITEK REFERENCE PAGE MII-7473 rev. 1/2/2023 BEFORE USE.
Design valid for use only with MiTek® connectors. This design is based only upon parameters shown, and is for an individual building component, not a truss system. Before use, the building designer must verify the applicability of design parameters and properly incorporate this design into the overall building design. Bracing indicated is to prevent buckling of individual truss web and/or chord members only. Additional temporary and permanent bracing is always required for stability and to prevent collapse with possible personal injury and property damage. For general guidance regarding the fabrication, storage, delivery, erection and bracing of trusses and truss systems, see **ANSI/TPI1 Quality Criteria, and DSB-22** available from Truss Plate Institute (www.tpinst.org) and **BCSI Building Component Safety Information** available from the Structural Building Component Association (www.sbcscomponents.com)

MiTek®
16023 Swingley Ridge Rd
Chesterfield, MO 63017
314.434.1200 / MiTek-US.com

RELEASE FOR CONSTRUCTION
AS NOTED ON PLANS REVIEW
DEVELOPMENT SERVICES
LEE'S SUMMIT, MISSOURI
08/15/2025 5:17:48

Job	Truss	Truss Type	Qty	Ply	Roof - HM Lot 196
P250555-01	A12	Roof Special	1	1	I74462334 Job Reference (optional)

Premier Building Supply (Springhill, KS), Spring Hills, KS - 66083, Run: 8.63 S Sep 26 2024 Print: 8.630 S Sep 26 2024 MiTek Industries, Inc. Wed Jun 25 09:29:30 Page: 1

ID:g7OMdOeuN_ZmfO7BfW5IXxzbfGv-RfC?PsB70Hq3NSgPqnL8w3uITXbGKWrCDoi7J4zJC?f

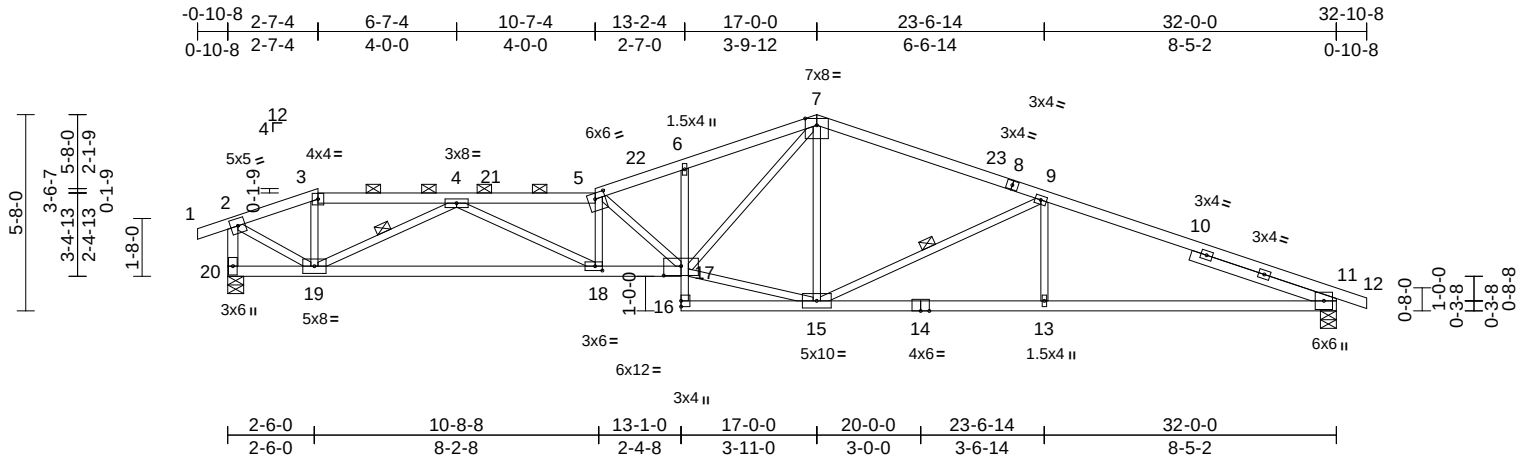

Scale = 1:66.5

Plate Offsets (X, Y): [5:0-3-8,0-2-0], [11:0-3-13,0-1-5], [17:0-6-0,0-3-4], [18:0-2-8,0-1-8]

Loading	(psf)	Spacing	2-0-0	CSI		DEFL	in	(loc)	l/defl	L/d	PLATES	GRIP
TCLL (roof)	25.0	Plate Grip DOL	1.15	TC	0.93	Vert(LL)	-0.34	17-18	>999	240	MT20	197/144
TCDL	10.0	Lumber DOL	1.15	BC	0.96	Vert(CT)	-0.62	17-18	>616	180		
BCLL	0.0	Rep Stress Incr	YES	WB	0.72	Horz(CT)	0.17	11	n/a	n/a		
BCDL	10.0	Code	IRC2018/TPI2014	Matrix-S							Weight: 146 lb	FT = 20%

LUMBER

TOP CHORD 2x4 SP No.2

BOT CHORD 2x4 SP No.2 *Except* 20-17:2x4 SP 1650F 1.5E, 6-16:2x3 SPF No.2

WEBS 2x3 SPF No.2 *Except* 20-2:2x4 SP No.2

SLIDER Right 2x4 SP No.2 -- 4-4-14

BRACING

TOP CHORD Structural wood sheathing directly applied, except end verticals, and 2-0-0 oc purlins (2-2-0 max.): 3-5.

BOT CHORD Rigid ceiling directly applied or 2-2-0 oc bracing.

WEBS 1 Row at midpt 4-19, 9-15

REACTIONS (size) 11=0-5-8, 20=0-5-8

Max Horiz 20=-122 (LC 13)

Max Uplift 11=-280 (LC 9), 20=-308 (LC 8)

Max Grav 11=1494 (LC 1), 20=1505 (LC 1)

FORCES (lb) - Maximum Compression/Maximum Tension

TOP CHORD 1-2=0/23, 2-3=-1599/374, 3-4=-1491/372, 4-5=-4666/1088, 5-6=-3781/926, 6-7=-3737/973, 7-9=-2340/614, 9-11=-3162/730, 11-12=-5/0, 2-20=-1517/431

BOT CHORD 19-20=-48/127, 18-19=-768/3475, 17-18=-935/4641, 16-17=0/60, 6-17=-161/126, 15-16=-19/152, 13-15=-603/2886, 11-13=-603/2886

WEBS 3-19=-14/285, 5-18=-465/197, 5-17=-1437/301, 7-17=-517/2091, 2-19=-368/1728, 7-15=-148/113, 15-17=-377/2062, 4-18=-230/1337, 4-19=-2233/609, 9-13=0/325, 9-15=-881/270

NOTES

1) Unbalanced roof live loads have been considered for this design.
2) Wind: ASCE 7-16; Vult=115mph (3-second gust) Vasd=91mph; TCDL=6.0psf; BCDL=6.0psf; h=35ft; Ke=1.00; Cat. II; Exp C; Enclosed; MWFRS (envelope) exterior zone and C-C Exterior(2E) -0-10-8 to 2-7-4, Exterior(2R) 2-7-4 to 7-7-4, Interior (1) 7-7-4 to 17-0-0, Exterior(2R) 17-0-0 to 22-0-0, Interior (1) 22-0-0 to 32-10-8 zone; cantilever left and right exposed ; end vertical left and right exposed;C-C for members and forces & MWFRS for reactions shown; Lumber DOL=1.60 plate grip DOL=1.60
3) Provide adequate drainage to prevent water ponding.
4) This truss has been designed for a 10.0 psf bottom chord live load nonconcurrent with any other live loads.
5) Bearings are assumed to be: Joint 20 SP 1650F 1.5E crushing capacity of 565 psi, Joint 11 SP No.2 crushing capacity of 565 psi.
6) Provide mechanical connection (by others) of truss to bearing plate capable of withstanding 308 lb uplift at joint 20 and 280 lb uplift at joint 11.
7) This truss is designed in accordance with the 2018 International Residential Code sections R502.11.1 and R802.10.2 and referenced standard ANSI/TPI 1.
8) Graphical purlin representation does not depict the size or the orientation of the purlin along the top and/or bottom chord.

LOAD CASE(S) Standard

STATE OF MISSOURI
JIE LU
NUMBER
PE-029327
PROFESSIONAL ENGINEER

June 26,2025

WARNING - Verify design parameters and READ NOTES ON THIS AND INCLUDED MITEK REFERENCE PAGE MII-7473 rev. 1/2/2023 BEFORE USE.
Design valid for use only with MiTek® connectors. This design is based only upon parameters shown, and is for an individual building component, not a truss system. Before use, the building designer must verify the applicability of design parameters and properly incorporate this design into the overall building design. Bracing indicated is to prevent buckling of individual truss web and/or chord members only. Additional temporary and permanent bracing is always required for stability and to prevent collapse with possible personal injury and property damage. For general guidance regarding the fabrication, storage, delivery, erection and bracing of trusses and truss systems, see **ANSI/TPI1 Quality Criteria, and DSB-22** available from Truss Plate Institute (www.tpinst.org) and **BCSI Building Component Safety Information** available from the Structural Building Component Association (www.sbcscomponents.com)

MiTek®
16023 Swingley Ridge Rd
Chesterfield, MO 63017
314.434.1200 / MiTek-US.com

RELEASE FOR CONSTRUCTION
AS NOTED ON PLANS REVIEW
DEVELOPMENT SERVICES
LEE'S SUMMIT, MISSOURI
08/15/2025 5:17:48

Job	Truss	Truss Type	Qty	Ply	Roof - HM Lot 196
P250555-01	A13	Hip Girder	1	2	I74462335 Job Reference (optional)

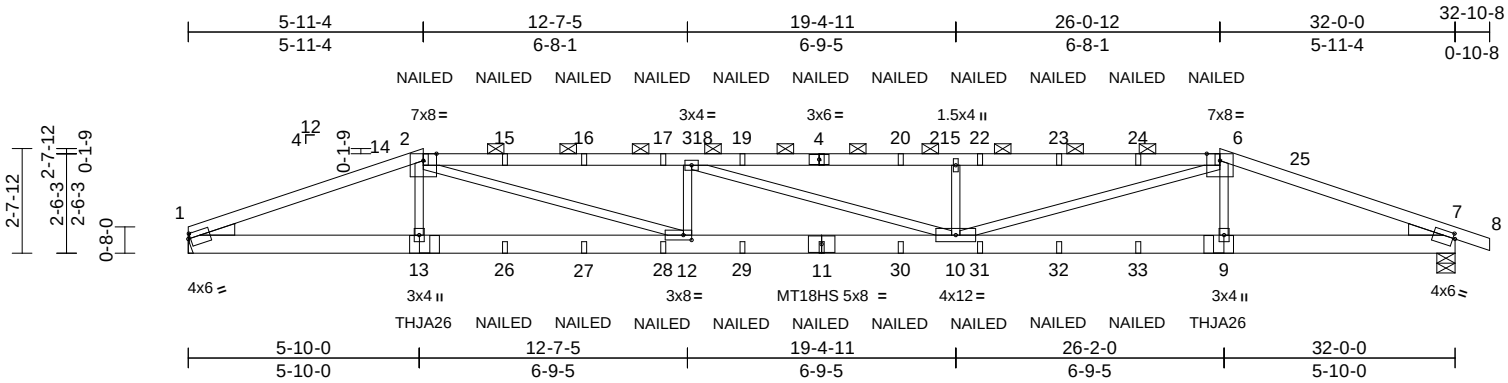

Scale = 1:58.2

Plate Offsets (X, Y): [1:0-0-11,0-1-8], [7:0-0-11,0-1-8], [12:0-2-8,0-1-8]

Loading	(psf)	Spacing	2-0-0	CSI		DEFL	in	(loc)	l/defl	L/d	PLATES	GRIP
TCLL (roof)	25.0	Plate Grip DOL	1.15	TC	0.97	Vert(LL)	-0.43	10-12	>895	240	MT20	244/190
TCDL	10.0	Lumber DOL	1.15	BC	0.50	Vert(CT)	-0.77	10-12	>496	180	MT18HS	244/190
BCLL	0.0	Rep Stress Incr	NO	WB	0.71	Horz(CT)	0.09	7	n/a	n/a		
BCDL	10.0	Code	IRC2018/TPI2014	Matrix-S							Weight: 300 lb	FT = 20%

LUMBER

TOP CHORD 2x4 SP No.2 *Except* 2-4,4-6:2x4 SP 2400F 2.0E
BOT CHORD 2x6 SP 2400F 2.0E
WEBS 2x3 SPF No.2
WEDGE Left: 2x4 SP No.3
Right: 2x4 SP No.3

BRACING

TOP CHORD Structural wood sheathing directly applied or 3-11-4 oc purlins, except
2-0-0 oc purlins (4-2-2 max.): 2-6.
BOT CHORD Rigid ceiling directly applied or 10-0-0 oc bracing.

REACTIONS (size) 1= Mechanical, 7=0-5-8
Max Horiz 1=-42 (LC 17)
Max Uplift 1=-745 (LC 8), 7=-801 (LC 9)
Max Grav 1=2734 (LC 1), 7=2828 (LC 1)

FORCES (lb) - Maximum Compression/Maximum Tension
TOP CHORD 1-2=-7218/2111, 2-3=-10500/3088, 3-5=-10383/3013, 5-6=-10388/3016, 6-7=-7107/2041, 7-8=0/1
BOT CHORD 1-13=-1902/6697, 12-13=-1900/6666, 10-12=-2965/10495, 9-10=-1829/6534, 7-9=-1831/6566
WEBS 2-13=-24/685, 2-12=-1154/4135, 3-12=-1048/532, 3-10=-176/76, 5-10=-1049/544, 6-10=-1156/4146, 6-9=-41/699

NOTES

1) 2-ply truss to be connected together with 10d (0.131"x3") nails as follows:
Top chords connected as follows: 2x4 - 1 row at 0-9-0 oc.
Bottom chords connected as follows: 2x6 - 2 rows staggered at 0-9-0 oc.
Web connected as follows: 2x3 - 1 row at 0-9-0 oc.
2) All loads are considered equally applied to all plies, except if noted as front (F) or back (B) face in the LOAD CASE(S) section. Ply to ply connections have been provided to distribute only loads noted as (F) or (B), unless otherwise indicated.
3) Unbalanced roof live loads have been considered for this design.
4) Wind: ASCE 7-16; Vult=115mph (3-second gust) Vasd=91mph; TCDL=6.0psf; BCDL=6.0psf; h=35ft; Ke=1.00; Cat. II; Exp C; Enclosed; MWFRS (envelope) exterior zone and C-C Exterior(2E) 0-0-12 to 5-0-12, Interior (1) 5-0-12 to 5-11-4, Exterior(2R) 5-11-4 to 13-0-2, Interior (1) 13-0-2 to 26-0-12, Exterior(2E) 26-0-12 to 32-10-8 zone; cantilever left and right exposed ; end vertical left and right exposed;C-C for members and forces & MWFRS for reactions shown; Lumber DOL=1.60 plate grip DOL=1.60
5) Provide adequate drainage to prevent water ponding.
6) All plates are MT20 plates unless otherwise indicated.
7) This truss has been designed for a 10.0 psf bottom chord live load nonconcurrent with any other live loads.
8) Bearings are assumed to be: , Joint 7 SP 2400F 2.0E crushing capacity of 805 psi.
9) Refer to girder(s) for truss to truss connections.
10) Provide mechanical connection (by others) of truss to bearing plate capable of withstanding 745 lb uplift at joint 1 and 801 lb uplift at joint 7.
11) This truss is designed in accordance with the 2018 International Residential Code sections R502.11.1 and R802.10.2 and referenced standard ANSI/TPI 1.
12) Graphical purlin representation does not depict the size or the orientation of the purlin along the top and/or bottom chord.
13) Use Simpson Strong-Tie THJA26 (THJA26 on 2 ply, Left Hand Hip) or equivalent at 5-11-10 from the left end to connect truss(es) to front face of bottom chord.
14) Use Simpson Strong-Tie THJA26 (THJA26 on 2 ply, Right Hand Hip) or equivalent at 26-0-6 from the left end to connect truss(es) to front face of bottom chord.
15) Fill all nail holes where hanger is in contact with lumber.
16) "NAILED" indicates Girder: 3-10d (0.148" x 3") toe-nails per NDS guidelines.

LOAD CASE(S) Standard

1) Dead + Roof Live (balanced): Lumber Increase=1.15, Plate Increase=1.15
Uniform Loads (lb/ft)
Vert: 1-2=-70, 2-6=-70, 6-8=-70, 1-7=-20
Concentrated Loads (lb)
Vert: 2=-131 (F), 4=-131 (F), 11=-39 (F), 13=-420 (F), 6=-131 (F), 9=-420 (F), 15=-131 (F), 16=-131 (F), 17=-131 (F), 19=-131 (F), 20=-131 (F), 22=-131 (F), 23=-131 (F), 24=-131 (F), 26=-39 (F), 27=-39 (F), 28=-39 (F), 29=-39 (F), 30=-39 (F), 31=-39 (F), 32=-39 (F), 33=-39 (F)

June 26,2025

WARNING - Verify design parameters and READ NOTES ON THIS AND INCLUDED MITEK REFERENCE PAGE MII-7473 rev. 1/2/2023 BEFORE USE.
Design valid for use only with MiTek® connectors. This design is based only upon parameters shown, and is for an individual building component, not a truss system. Before use, the building designer must verify the applicability of design parameters and properly incorporate this design into the overall building design. Bracing indicated is to prevent buckling of individual truss web and/or chord members only. Additional temporary and permanent bracing is always required for stability and to prevent collapse with possible personal injury and property damage. For general guidance regarding the fabrication, storage, delivery, erection and bracing of trusses and truss systems, see **ANSI/TPI1 Quality Criteria, and DSB-22** available from Truss Plate Institute (www.tpinst.org) and **BCSI Building Component Safety Information** available from the Structural Building Component Association (www.sbcscomponents.com)

MiTek®
16023 Swingley Ridge Rd
Chesterfield, MO 63017
314.434.1200 / MiTek-US.com

RELEASE FOR CONSTRUCTION
AS NOTED ON PLANS REVIEW
DEVELOPMENT SERVICES
LEE'S SUMMIT, MISSOURI
08/15/2025 5:17:49

Job	Truss	Truss Type	Qty	Ply	Roof - HM Lot 196
P250555-01	A14	Hip	1	1	I74462336 Job Reference (optional)

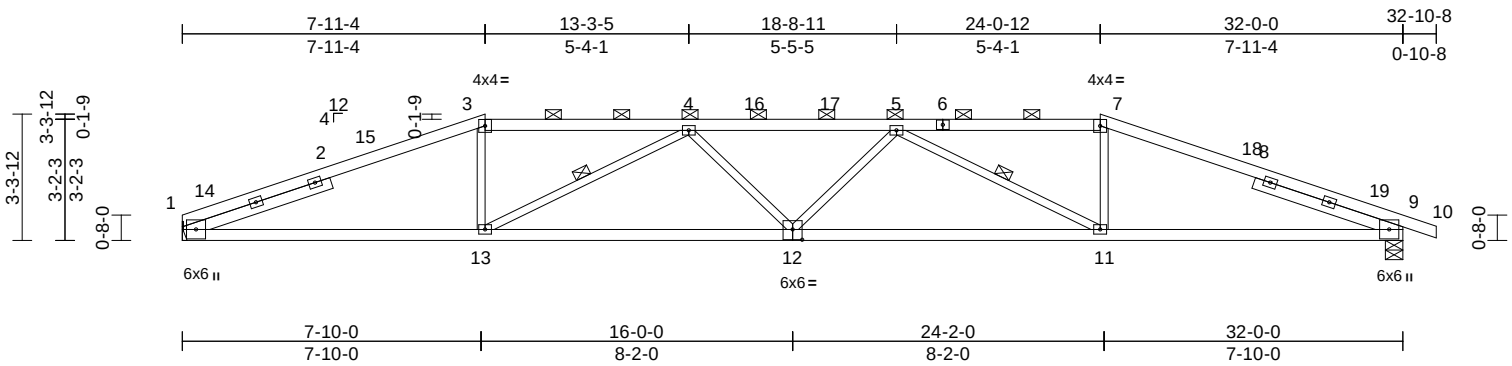

Scale = 1:60.4

Plate Offsets (X, Y): [1:0-3-0,0-1-5], [9:0-3-13,0-1-5], [12:0-3-0,0-3-4]

Loading	(psf)	Spacing	2-0-0	CSI		DEFL	in	(loc)	l/defl	L/d	PLATES	GRIP
TCLL (roof)	25.0	Plate Grip DOL	1.15	TC	0.81	Vert(LL)	-0.32	12	>999	240	MT20	244/190
TCDL	10.0	Lumber DOL	1.15	BC	0.74	Vert(CT)	-0.61	11-12	>629	180		
BCLL	0.0	Rep Stress Incr	YES	WB	0.48	Horz(CT)	0.17	9	n/a	n/a		
BCDL	10.0	Code	IRC2018/TPI2014	Matrix-S							Weight: 130 lb	FT = 20%

LUMBER

TOP CHORD 2x4 SP 2400F 2.0E *Except* 3-6,6-7:2x4 SP No.2
BOT CHORD 2x4 SP 1650F 1.5E
WEBS 2x3 SPF No.2
SLIDER Left 2x4 SP No.2 -- 4-1-2, Right 2x4 SP No.2 -- 4-1-2

BRACING

TOP CHORD Structural wood sheathing directly applied or 3-4-5 oc purlins, except 2-0-0 oc purlins (2-5-10 max.): 3-7.
BOT CHORD Rigid ceiling directly applied or 7-4-5 oc bracing.
WEBS 1 Row at midpt 4-13, 5-11

REACTIONS (size) 1= Mechanical, 9=0-5-8
Max Horiz 1=57 (LC 16)
Max Uplift 1=-299 (LC 8), 9=-340 (LC 9)
Max Grav 1=1439 (LC 1), 9=1502 (LC 1)

FORCES (lb) - Maximum Compression/Maximum Tension
TOP CHORD 1-3=-3244/833, 3-4=-2945/826, 4-5=-3980/1026, 5-7=-2938/801, 7-9=-3240/810, 9-10=-5/0
BOT CHORD 1-13=-682/2967, 11-13=-951/3908, 9-11=-664/2962
WEBS 3-13=-51/733, 7-11=-53/735, 4-12=0/225, 4-13=-1225/322, 5-12=0/219, 5-11=-1235/325

NOTES

1) Unbalanced roof live loads have been considered for this design.
2) Wind: ASCE 7-16; Vult=115mph (3-second gust) Vasd=91mph; TCDL=6.0psf; BCDL=6.0psf; h=35ft; Ke=1.00; Cat. II; Exp C; Enclosed; MWFRS (envelope) exterior zone and C-C Exterior(2E) 0-0-0 to 5-0-0, Interior (1) 5-0-0 to 7-11-4, Exterior(2R) 7-11-4 to 15-0-2, Interior (1) 15-0-2 to 24-0-12, Exterior(2R) 24-0-12 to 31-1-10, Interior (1) 31-1-10 to 32-10-8 zone; cantilever left and right exposed ; end vertical left and right exposed;C-C for members and forces & MWFRS for reactions shown; Lumber DOL=1.60 plate grip DOL=1.60
3) Provide adequate drainage to prevent water ponding.
4) All plates are 3x4 MT20 unless otherwise indicated.
5) This truss has been designed for a 10.0 psf bottom chord live load nonconcurrent with any other live loads.
6) Bearings are assumed to be: , Joint 9 SP 1650F 1.5E crushing capacity of 565 psi.
7) Refer to girder(s) for truss to truss connections.
8) Provide mechanical connection (by others) of truss to bearing plate capable of withstanding 299 lb uplift at joint 1 and 340 lb uplift at joint 9.
9) This truss is designed in accordance with the 2018 International Residential Code sections R502.11.1 and R802.10.2 and referenced standard ANSI/TPI 1.
10) Graphical purlin representation does not depict the size or the orientation of the purlin along the top and/or bottom chord.

LOAD CASE(S) Standard

STATE OF MISSOURI
JIE LU
NUMBER
PE-029327
PROFESSIONAL ENGINEER

June 26,2025

WARNING - Verify design parameters and READ NOTES ON THIS AND INCLUDED MITEK REFERENCE PAGE MII-7473 rev. 1/2/2023 BEFORE USE.
Design valid for use only with MiTek® connectors. This design is based only upon parameters shown, and is for an individual building component, not a truss system. Before use, the building designer must verify the applicability of design parameters and properly incorporate this design into the overall building design. Bracing indicated is to prevent buckling of individual truss web and/or chord members only. Additional temporary and permanent bracing is always required for stability and to prevent collapse with possible personal injury and property damage. For general guidance regarding the fabrication, storage, delivery, erection and bracing of trusses and truss systems, see **ANSI/TPI1 Quality Criteria, and DSB-22** available from Truss Plate Institute (www.tpinst.org) and **BCSI Building Component Safety Information** available from the Structural Building Component Association (www.sbcscomponents.com)

MiTek®
16023 Swingley Ridge Rd
Chesterfield, MO 63017
314.434.1200 / MiTek-US.com

RELEASE FOR CONSTRUCTION
AS NOTED ON PLANS REVIEW
DEVELOPMENT SERVICES
LEE'S SUMMIT, MISSOURI
08/15/2025 5:17:49

Job	Truss	Truss Type	Qty	Ply	Roof - HM Lot 196
P250555-01	A15	Hip	1	1	I74462337 Job Reference (optional)

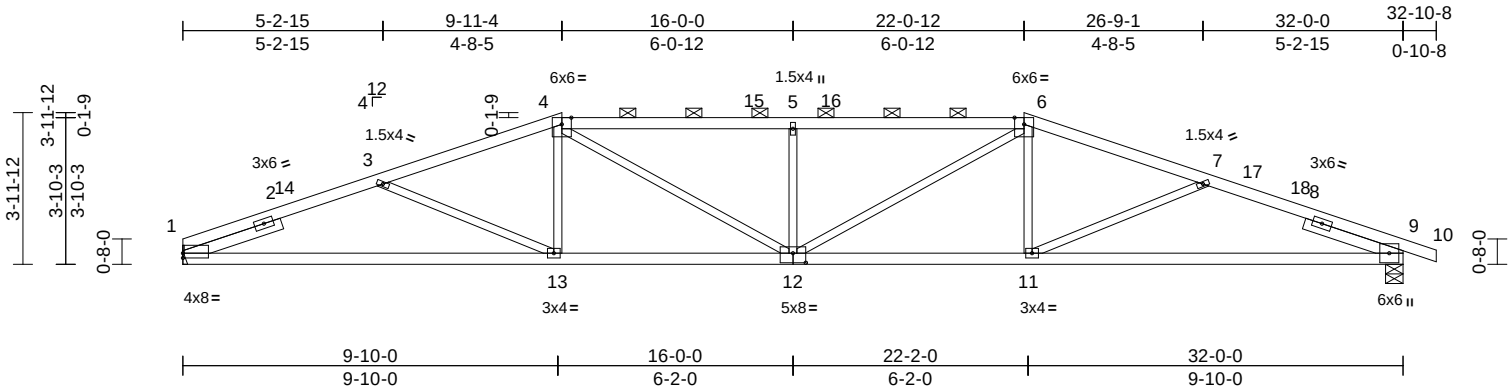

Scale = 1:60.4

Plate Offsets (X, Y): [1:Edge,0-1-8], [9:0-3-13,0-1-5], [12:0-4-0,0-3-0]

Loading	(psf)	Spacing	2-0-0	CSI		DEFL	in	(loc)	l/defl	L/d	PLATES	GRIP
TCLL (roof)	25.0	Plate Grip DOL	1.15	TC	0.97	Vert(LL)	-0.27	12	>999	240	MT20	244/190
TCDL	10.0	Lumber DOL	1.15	BC	0.72	Vert(CT)	-0.57	1-13	>674	180		
BCLL	0.0	Rep Stress Incr	YES	WB	0.28	Horz(CT)	0.14	9	n/a	n/a		
BCDL	10.0	Code	IRC2018/TPI2014	Matrix-S							Weight: 134 lb	FT = 20%

LUMBER

TOP CHORD 2x4 SP No.2 *Except* 1-4:2x4 SP 1650F 1.5E
BOT CHORD 2x4 SP 1650F 1.5E
WEBS 2x3 SPF No.2
SLIDER Left 2x4 SP No.2 -- 2-8-8, Right 2x4 SP No.2 -- 2-8-8

BRACING

TOP CHORD Structural wood sheathing directly applied, except
2-0-0 oc purlins (2-2-0 max.): 4-6.
BOT CHORD Rigid ceiling directly applied or 7-10-7 oc bracing.

REACTIONS (size) 1= Mechanical, 9=0-5-8
Max Horiz 1=70 (LC 16)
Max Uplift 1=-290 (LC 8), 9=-331 (LC 9)
Max Grav 1=1439 (LC 1), 9=1502 (LC 1)

FORCES (lb) - Maximum Compression/Maximum Tension
TOP CHORD 1-3=-3205/923, 3-4=-2970/801, 4-5=-3306/966, 5-6=-3306/966, 6-7=-2966/791, 7-9=-3198/925, 9-10=-5/0
BOT CHORD 1-13=-802/2910, 11-13=-618/2790, 9-11=-800/2902
WEBS 4-13=0/344, 4-12=-224/752, 5-12=-533/261, 6-12=-225/755, 6-11=0/343, 3-13=-154/232, 7-11=-149/229

NOTES

1) Unbalanced roof live loads have been considered for this design.
2) Wind: ASCE 7-16; Vult=115mph (3-second gust) Vasd=91mph; TCDL=6.0psf; BCDL=6.0psf; h=35ft; Ke=1.00; Cat. II; Exp C; Enclosed; MWFRS (envelope) exterior zone and C-C Exterior(2E) 0-0-0 to 5-0-9, Interior (1) 5-0-9 to 9-11-4, Exterior(2R) 9-11-4 to 17-0-2, Interior (1) 17-0-2 to 22-0-12, Exterior(2R) 22-0-12 to 29-1-10, Interior (1) 29-1-10 to 32-10-8 zone; cantilever left and right exposed ; end vertical left and right exposed;C-C for members and forces & MWFRS for reactions shown; Lumber DOL=1.60 plate grip DOL=1.60
3) Provide adequate drainage to prevent water ponding.
4) This truss has been designed for a 10.0 psf bottom chord live load nonconcurrent with any other live loads.
5) Bearings are assumed to be: , Joint 9 SP 1650F 1.5E crushing capacity of 565 psi.
6) Refer to girder(s) for truss to truss connections.
7) Provide mechanical connection (by others) of truss to bearing plate capable of withstanding 290 lb uplift at joint 1 and 331 lb uplift at joint 9.
8) This truss is designed in accordance with the 2018 International Residential Code sections R502.11.1 and R802.10.2 and referenced standard ANSI/TPI 1.
9) Graphical purlin representation does not depict the size or the orientation of the purlin along the top and/or bottom chord.

LOAD CASE(S) Standard

June 26,2025

WARNING - Verify design parameters and READ NOTES ON THIS AND INCLUDED MITEK REFERENCE PAGE MII-7473 rev. 1/2/2023 BEFORE USE.
Design valid for use only with MiTek® connectors. This design is based only upon parameters shown, and is for an individual building component, not a truss system. Before use, the building designer must verify the applicability of design parameters and properly incorporate this design into the overall building design. Bracing indicated is to prevent buckling of individual truss web and/or chord members only. Additional temporary and permanent bracing is always required for stability and to prevent collapse with possible personal injury and property damage. For general guidance regarding the fabrication, storage, delivery, erection and bracing of trusses and truss systems, see **ANSI/TPI1 Quality Criteria, and DSB-22** available from Truss Plate Institute (www.tpinst.org) and **BCSI Building Component Safety Information** available from the Structural Building Component Association (www.sbcscomponents.com)

MiTek®
16023 Swingley Ridge Rd
Chesterfield, MO 63017
314.434.1200 / MiTek-US.com

RELEASE FOR CONSTRUCTION
AS NOTED ON PLANS REVIEW
DEVELOPMENT SERVICES
LEE'S SUMMIT, MISSOURI
08/15/2025 5:17:49

Job	Truss	Truss Type	Qty	Ply	Roof - HM Lot 196
P250555-01	A16	Hip	1	1	I74462338 Job Reference (optional)

Premier Building Supply (Springhill, KS), Spring Hills, KS - 66083, Run: 8.63 S Sep 26 2024 Print: 8.630 S Sep 26 2024 MiTek Industries, Inc. Wed Jun 25 09:29:31 Page: 1
ID:GMw5v9djdCcX28U2LMn1svzEAIp-RfC?PsB70Hq3NSgPqnL8w3uITXbGKWrCDoi7J4zJC?f

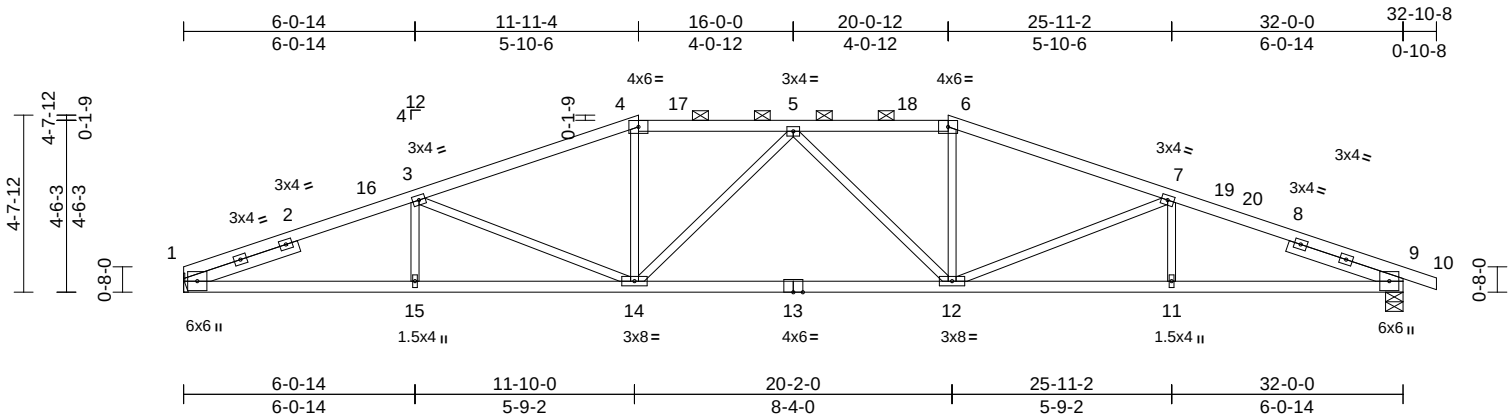

Scale = 1:60.5

Plate Offsets (X, Y): [1:0-3-0,0-1-5], [9:0-3-13,0-1-5]

Loading	(psf)	Spacing	2-0-0	CSI		DEFL	in	(loc)	l/defl	L/d	PLATES	GRIP
TCLL (roof)	25.0	Plate Grip DOL	1.15	TC	0.68	Vert(LL)	-0.23	12-14	>999	240	MT20	244/190
TCDL	10.0	Lumber DOL	1.15	BC	0.87	Vert(CT)	-0.51	12-14	>757	180		
BCLL	0.0	Rep Stress Incr	YES	WB	0.47	Horz(CT)	0.15	9	n/a	n/a		
BCDL	10.0	Code	IRC2018/TPI2014	Matrix-S							Weight: 137 lb	FT = 20%

LUMBER

TOP CHORD 2x4 SP 1650F 1.5E *Except* 4-6:2x4 SP No.2
BOT CHORD 2x4 SP No.2
WEBS 2x3 SPF No.2
SLIDER Left 2x4 SP No.2 -- 3-2-0, Right 2x4 SP No.2 -- 3-2-0

BRACING

TOP CHORD Structural wood sheathing directly applied or 2-10-9 oc purlins, except 2-0-0 oc purlins (3-6-3 max.): 4-6.
BOT CHORD Rigid ceiling directly applied or 6-8-1 oc bracing.

REACTIONS (size) 1= Mechanical, 9=0-5-8
Max Horiz 1=82 (LC 12)
Max Uplift 1=-279 (LC 8), 9=-320 (LC 9)
Max Grav 1=1439 (LC 1), 9=1502 (LC 1)

FORCES (lb) - Maximum Compression/Maximum Tension
TOP CHORD 1-3=-3281/886, 3-4=-2759/782, 4-5=-2559/778, 5-6=-2557/786, 6-7=-2745/790, 7-9=-3271/893, 9-10=-5/0
BOT CHORD 1-15=-768/2983, 14-15=-768/2983, 12-14=-665/2722, 11-12=-771/2974, 9-11=-771/2974
WEBS 3-15=0/210, 3-14=-490/221, 4-14=-88/498, 6-12=-82/497, 7-12=-482/219, 7-11=0/208, 5-12=-407/153, 5-14=-405/152

NOTES

1) Unbalanced roof live loads have been considered for this design.
2) Wind: ASCE 7-16; Vult=115mph (3-second gust) Vasd=91mph; TCDL=6.0psf; BCDL=6.0psf; h=35ft; Ke=1.00; Cat. II; Exp C; Enclosed; MWFRS (envelope) exterior zone and C-C Exterior(2E) 0-0-0 to 5-0-0, Interior (1) 5-0-0 to 11-11-4, Exterior(2R) 11-11-4 to 19-0-2, Interior (1) 19-0-2 to 20-0-12, Exterior(2R) 20-0-12 to 27-1-10, Interior (1) 27-1-10 to 32-10-8 zone; cantilever left and right exposed ; end vertical left and right exposed;C-C for members and forces & MWFRS for reactions shown; Lumber DOL=1.60 plate grip DOL=1.60
3) Provide adequate drainage to prevent water ponding.
4) This truss has been designed for a 10.0 psf bottom chord live load nonconcurrent with any other live loads.
5) Bearings are assumed to be: , Joint 9 SP No.2 crushing capacity of 565 psi.
6) Refer to girder(s) for truss to truss connections.
7) Provide mechanical connection (by others) of truss to bearing plate capable of withstanding 279 lb uplift at joint 1 and 320 lb uplift at joint 9.
8) This truss is designed in accordance with the 2018 International Residential Code sections R502.11.1 and R802.10.2 and referenced standard ANSI/TPI 1.
9) Graphical purlin representation does not depict the size or the orientation of the purlin along the top and/or bottom chord.

LOAD CASE(S) Standard

STATE OF MISSOURI
JIE LU
NUMBER
PE-029327
PROFESSIONAL ENGINEER

June 26,2025

WARNING - Verify design parameters and READ NOTES ON THIS AND INCLUDED MITEK REFERENCE PAGE MII-7473 rev. 1/2/2023 BEFORE USE.
Design valid for use only with MiTek® connectors. This design is based only upon parameters shown, and is for an individual building component, not a truss system. Before use, the building designer must verify the applicability of design parameters and properly incorporate this design into the overall building design. Bracing indicated is to prevent buckling of individual truss web and/or chord members only. Additional temporary and permanent bracing is always required for stability and to prevent collapse with possible personal injury and property damage. For general guidance regarding the fabrication, storage, delivery, erection and bracing of trusses and truss systems, see **ANSI/TPI1 Quality Criteria, and DSB-22** available from Truss Plate Institute (www.tpinst.org) and **BCSI Building Component Safety Information** available from the Structural Building Component Association (www.sbcscomponents.com)

MiTek®
16023 Swingley Ridge Rd
Chesterfield, MO 63017
314.434.1200 / MiTek-US.com

RELEASE FOR CONSTRUCTION
AS NOTED ON PLANS REVIEW
DEVELOPMENT SERVICES
LEE'S SUMMIT, MISSOURI
08/15/2025 5:17:49

Job	Truss	Truss Type	Qty	Ply	Roof - HM Lot 196
P250555-01	A17	Hip	1	1	I74462339 Job Reference (optional)

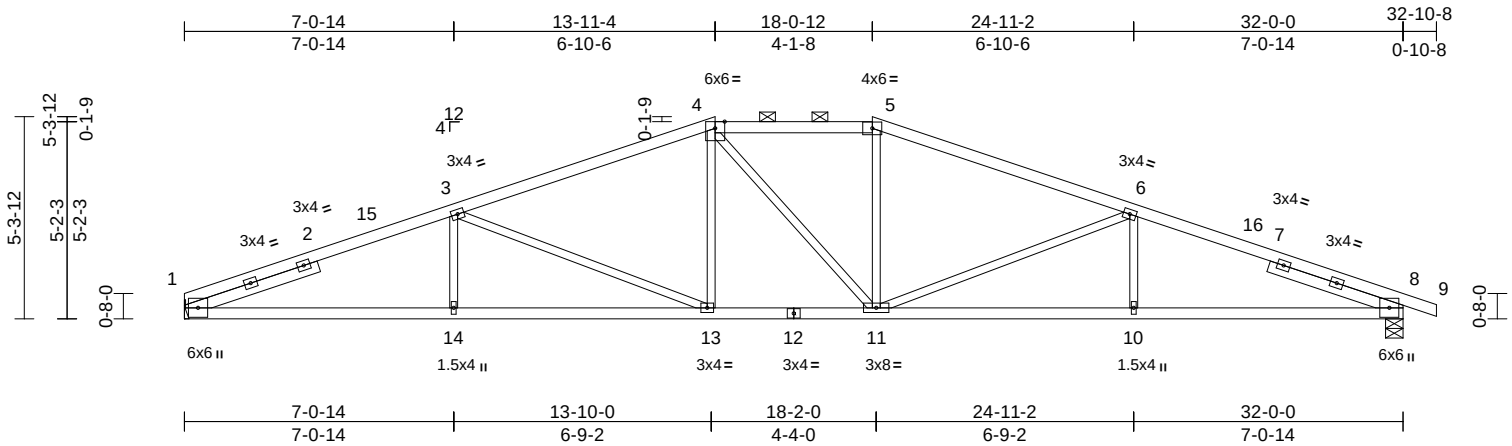

Scale = 1:60.5

Plate Offsets (X, Y): [1:0-3-0,0-1-5], [8:0-3-13,0-1-5]

Loading	(psf)	Spacing	2-0-0	CSI		DEFL	in	(loc)	l/defl	L/d	PLATES	GRIP
TCLL (roof)	25.0	Plate Grip DOL	1.15	TC	0.79	Vert(LL)	-0.22	13-14	>999	240	MT20	244/190
TCDL	10.0	Lumber DOL	1.15	BC	0.86	Vert(CT)	-0.44	13-14	>881	180		
BCLL	0.0	Rep Stress Incr	YES	WB	0.99	Horz(CT)	0.15	8	n/a	n/a		
BCDL	10.0	Code	IRC2018/TPI2014	Matrix-S							Weight: 138 lb	FT = 20%

LUMBER

TOP CHORD 2x4 SP 1650F 1.5E *Except* 4-5:2x4 SP No.2
BOT CHORD 2x4 SP No.2
WEBS 2x3 SPF No.2
SLIDER Left 2x4 SP No.2 -- 3-8-5, Right 2x4 SP No.2 -- 3-8-5

BRACING

TOP CHORD Structural wood sheathing directly applied or 2-2-0 oc purlins, except 2-0-0 oc purlins (3-7-7 max.): 4-5.
BOT CHORD Rigid ceiling directly applied or 6-9-12 oc bracing.

REACTIONS (size) 1= Mechanical, 8=0-5-8
Max Horiz 1=95 (LC 12)
Max Uplift 1=-267 (LC 8), 8=-308 (LC 9)
Max Grav 1=1439 (LC 1), 8=1502 (LC 1)

FORCES (lb) - Maximum Compression/Maximum Tension
TOP CHORD 1-3=-3263/851, 3-4=-2525/729, 4-5=-2323/745, 5-6=-2525/739, 6-8=-3256/862, 8-9=-5/0
BOT CHORD 1-14=-718/2986, 13-14=-718/2986, 11-13=-498/2322, 10-11=-737/2978, 8-10=-737/2978
WEBS 3-14=0/292, 3-13=-754/257, 4-13=-34/392, 4-11=-222/224, 5-11=-46/386, 6-11=-746/255, 6-10=0/289

NOTES

1) Unbalanced roof live loads have been considered for this design.
2) Wind: ASCE 7-16; Vult=115mph (3-second gust) Vasd=91mph; TCDL=6.0psf; BCDL=6.0psf; h=35ft; Ke=1.00; Cat. II; Exp C; Enclosed; MWFRS (envelope) exterior zone and C-C Exterior(2E) 0-0-0 to 5-0-0, Interior (1) 5-0-0 to 13-11-4, Exterior(2E) 13-11-4 to 18-0-12, Exterior(2R) 18-0-12 to 24-11-2, Interior (1) 24-11-2 to 32-10-8 zone; cantilever left and right exposed ; end vertical left and right exposed;C-C for members and forces & MWFRS for reactions shown; Lumber DOL=1.60 plate grip DOL=1.60
3) Provide adequate drainage to prevent water ponding.
4) All plates are 3x4 MT20 unless otherwise indicated.
5) This truss has been designed for a 10.0 psf bottom chord live load nonconcurrent with any other live loads.
6) Bearings are assumed to be: , Joint 8 SP No.2 crushing capacity of 565 psi.
7) Refer to girder(s) for truss to truss connections.
8) Provide mechanical connection (by others) of truss to bearing plate capable of withstanding 267 lb uplift at joint 1 and 308 lb uplift at joint 8.
9) This truss is designed in accordance with the 2018 International Residential Code sections R502.11.1 and R802.10.2 and referenced standard ANSI/TPI 1.
10) Graphical purlin representation does not depict the size or the orientation of the purlin along the top and/or bottom chord.

LOAD CASE(S) Standard

STATE OF MISSOURI
JIE LU
NUMBER
PE-029327
PROFESSIONAL ENGINEER

June 26,2025

WARNING - Verify design parameters and READ NOTES ON THIS AND INCLUDED MITEK REFERENCE PAGE MII-7473 rev. 1/2/2023 BEFORE USE.
Design valid for use only with MiTek® connectors. This design is based only upon parameters shown, and is for an individual building component, not a truss system. Before use, the building designer must verify the applicability of design parameters and properly incorporate this design into the overall building design. Bracing indicated is to prevent buckling of individual truss web and/or chord members only. Additional temporary and permanent bracing is always required for stability and to prevent collapse with possible personal injury and property damage. For general guidance regarding the fabrication, storage, delivery, erection and bracing of trusses and truss systems, see **ANSI/TPI1 Quality Criteria, and DSB-22** available from Truss Plate Institute (www.tpinst.org) and **BCSI Building Component Safety Information** available from the Structural Building Component Association (www.sbcscomponents.com)

MiTek®
16023 Swingley Ridge Rd
Chesterfield, MO 63017
314.434.1200 / MiTek-US.com

RELEASE FOR CONSTRUCTION
AS NOTED ON PLANS REVIEW
DEVELOPMENT SERVICES
LEE'S SUMMIT, MISSOURI
08/15/2025 5:17:49

Job	Truss	Truss Type	Qty	Ply	Roof - HM Lot 196
P250555-01	A18	Roof Special	1	1	I74462340 Job Reference (optional)

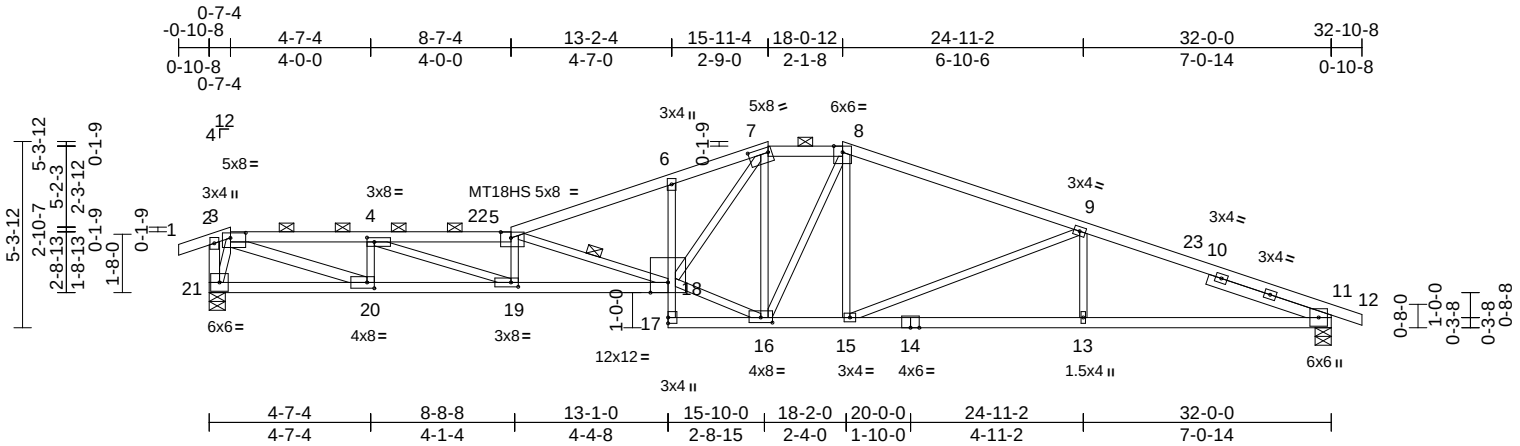

Scale = 1:65.7

Plate Offsets (X, Y): [3:0-5-4,0-1-12], [4:0-2-8,0-1-8], [5:0-3-8,0-2-0], [7:0-6-12,0-1-12], [11:0-3-13,0-1-5], [16:0-4-0,0-1-12], [19:0-2-8,0-1-8], [20:0-2-8,0-2-0]

Loading	(psf)	Spacing	2-0-0	CSI		DEFL	in	(loc)	l/defl	L/d	PLATES	GRIP
TCLL (roof)	25.0	Plate Grip DOL	1.15	TC	0.76	Vert(LL)	-0.45	18-19	>853	240	MT20	197/144
TCDL	10.0	Lumber DOL	1.15	BC	0.85	Vert(CT)	-0.82	18-19	>468	180	MT18HS	197/144
BCLL	0.0	Rep Stress Incr	YES	WB	1.00	Horz(CT)	0.17	11	n/a	n/a		
BCDL	10.0	Code	IRC2018/TPI2014	Matrix-S							Weight: 152 lb	FT = 20%

LUMBER

TOP CHORD 2x4 SP No.2 *Except* 3-5,8-12:2x4 SP 1650F 1.5E

BOT CHORD 2x4 SP No.2 *Except* 21-18:2x4 SP 2400F 2.0E, 6-17:2x3 SPF No.2

WEBS 2x3 SPF No.2 *Except* 21-2:2x4 SP 1650F 1.5E, 20-3:2x4 SP No.2

SLIDER Right 2x4 SP No.2 -- 3-8-5

BRACING

TOP CHORD Structural wood sheathing directly applied or 2-2-0 oc purlins, except end verticals, and 2-0-0 oc purlins (2-5-8 max.): 3-5, 7-8.

BOT CHORD Rigid ceiling directly applied or 6-11-2 oc bracing.

WEBS 1 Row at midpt 5-18

REACTIONS (size) 11=0-5-8, 21=0-5-8
Max Horiz 21=-114 (LC 13)
Max Uplift 11=-291 (LC 9), 21=-316 (LC 8)
Max Grav 11=1494 (LC 1), 21=1505 (LC 1)

FORCES (lb) - Maximum Compression/Maximum Tension

TOP CHORD 1-2=0/23, 2-3=-90/58, 3-4=-3829/1044, 4-5=-5859/1522, 5-6=-3835/1015, 6-7=-3763/1061, 7-8=-2302/708, 8-9=-2506/712, 9-11=-3234/837, 11-12=-5/0, 2-21=-159/112

BOT CHORD 20-21=-70/466, 19-20=-921/3827, 18-19=-1382/5809, 17-18=0/58, 6-18=-192/164, 16-17=-31/104, 15-16=-495/2305, 13-15=-714/2957, 11-13=-714/2957

WEBS 5-19=-683/257, 5-18=-2334/616, 16-18=-482/2332, 7-18=-585/2228, 7-16=-816/216, 8-16=-218/207, 8-15=-30/395, 9-15=-760/252, 9-13=0/288, 4-19=-562/2151, 4-20=-1165/396, 3-20=-973/3591, 3-21=-1347/405

NOTES

1) Unbalanced roof live loads have been considered for this design.
2) Wind: ASCE 7-16; Vult=115mph (3-second gust) Vasd=91mph; TCDL=6.0psf; BCDL=6.0psf; h=35ft; Ke=1.00; Cat. II; Exp C; Enclosed; MWFRS (envelope) exterior zone and C-C Exterior(2E) -0-10-8 to 7-8-2, Interior (1) 7-8-2 to 15-11-4, Exterior(2E) 15-11-4 to 18-0-12, Exterior(2R) 18-0-12 to 24-11-2, Interior (1) 24-11-2 to 32-10-8 zone; cantilever left and right exposed ; end vertical left and right exposed;C-C for members and forces & MWFRS for reactions shown; Lumber DOL=1.60 plate grip DOL=1.60
3) Provide adequate drainage to prevent water ponding.
4) All plates are MT20 plates unless otherwise indicated.
5) This truss has been designed for a 10.0 psf bottom chord live load nonconcurrent with any other live loads.
6) Bearings are assumed to be: Joint 21 SP 2400F 2.0E crushing capacity of 805 psi, Joint 11 SP No.2 crushing capacity of 565 psi.
7) Provide mechanical connection (by others) of truss to bearing plate capable of withstanding 291 lb uplift at joint 11 and 316 lb uplift at joint 21.
8) This truss is designed in accordance with the 2018 International Residential Code sections R502.11.1 and R802.10.2 and referenced standard ANSI/TPI 1.
9) Graphical purlin representation does not depict the size or the orientation of the purlin along the top and/or bottom chord.

LOAD CASE(S) Standard

June 26,2025

WARNING - Verify design parameters and READ NOTES ON THIS AND INCLUDED MITEK REFERENCE PAGE MII-7473 rev. 1/2/2023 BEFORE USE.
Design valid for use only with MiTek® connectors. This design is based only upon parameters shown, and is for an individual building component, not a truss system. Before use, the building designer must verify the applicability of design parameters and properly incorporate this design into the overall building design. Bracing indicated is to prevent buckling of individual truss web and/or chord members only. Additional temporary and permanent bracing is always required for stability and to prevent collapse with possible personal injury and property damage. For general guidance regarding the fabrication, storage, delivery, erection and bracing of trusses and truss systems, see **ANSI/TPI1 Quality Criteria, and DSB-22** available from Truss Plate Institute (www.tpinst.org) and **BCSI Building Component Safety Information** available from the Structural Building Component Association (www.sbcscomponents.com)

MiTek®
16023 Swingley Ridge Rd
Chesterfield, MO 63017
314.434.1200 / MiTek-US.com

RELEASE FOR CONSTRUCTION
AS NOTED ON PLANS REVIEW
DEVELOPMENT SERVICES
LEE'S SUMMIT, MISSOURI
08/15/2025 5:17:49

Job	Truss	Truss Type	Qty	Ply	Roof - HM Lot 196
P250555-01	B1	Hip Girder	1	2	I74462341 Job Reference (optional)

Premier Building Supply (Springhill, KS), Spring Hills, KS - 66083,

Run: 8.63 S Sep 26 2024 Print: 8.630 S Sep 26 2024 MiTek Industries, Inc. Wed Jun 25 09:29:32 Page: 1
ID:kZUT7VeLOWkOgI3Fv4IGP6zEAIo-RfC?PsB70Hq3NSgPqnL8w3uITXbGKWrCDoi7J4zJC?f

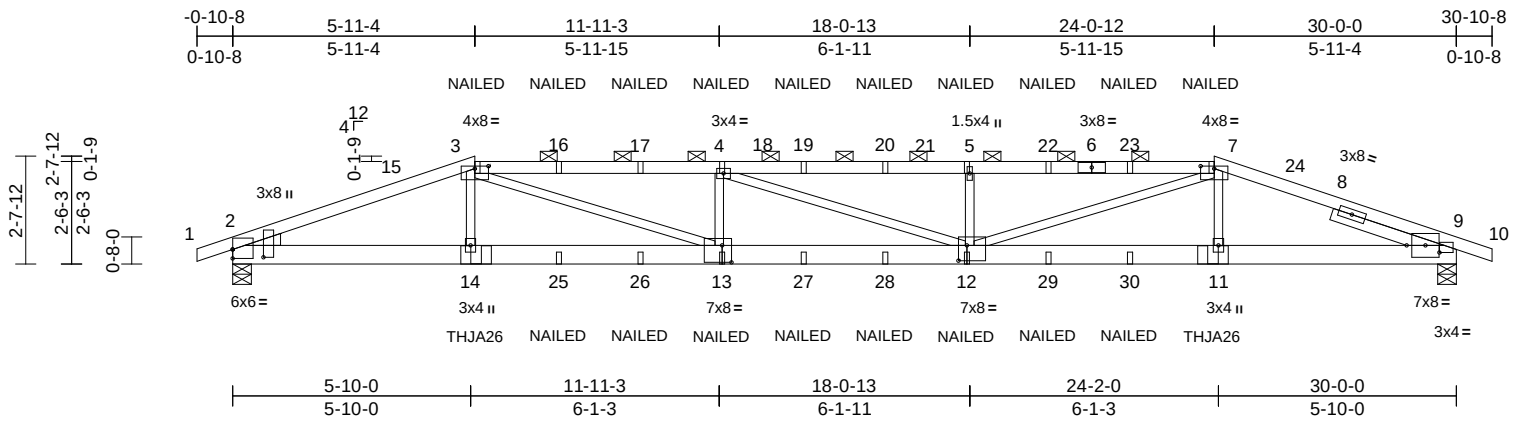

Scale = 1:56.5

Plate Offsets (X, Y): [2:Edge,0-2-10], [2:0-2-5,0-9-1], [3:0-4-0,0-0-12], [7:0-4-0,0-0-12], [9:0-1-9,0-3-8], [9:0-9-10,0-2-2], [12:0-2-8,0-4-8], [13:0-2-12,0-5-0]

Loading	(psf)	Spacing	2-0-0	CSI		DEFL	in	(loc)	l/defl	L/d	PLATES	GRIP
TCLL (roof)	25.0	Plate Grip DOL	1.15	TC	0.93	Vert(LL)	-0.34	12-13	>999	240	MT20	197/144
TCDL	10.0	Lumber DOL	1.15	BC	0.97	Vert(CT)	-0.61	12-13	>584	180		
BCLL	0.0	Rep Stress Incr	NO	WB	0.63	Horz(CT)	0.09	9	n/a	n/a		
BCDL	10.0	Code	IRC2018/TPI2014	Matrix-S							Weight: 264 lb	FT = 20%

LUMBER

TOP CHORD 2x4 SP 2400F 2.0E
BOT CHORD 2x6 SPF No.2 *Except* 13-12:2x6 SP 2400F 2.0E
WEBS 2x3 SPF No.2
WEDGE Left: 2x4 SP No.2
SLIDER Right 2x4 SP No.2 -- 2-10-6

BRACING

TOP CHORD Structural wood sheathing directly applied or 5-0-13 oc purlins, except 2-0-0 oc purlins (4-1-1 max.): 3-7.
BOT CHORD Rigid ceiling directly applied or 10-0-0 oc bracing.

REACTIONS (size) 2=0-5-8, 9=0-5-8
Max Horiz 2=-42 (LC 17)
Max Uplift 2=-749 (LC 8), 9=-749 (LC 9)
Max Grav 2=2637 (LC 1), 9=2637 (LC 1)

FORCES (lb) - Maximum Compression/Maximum Tension
TOP CHORD 1-2=0/1, 2-3=-6553/1896, 3-4=-9192/2708, 4-5=-9201/2689, 5-7=-9236/2707, 7-9=-6378/1849, 9-10=0/1
BOT CHORD 2-14=-1686/6049, 11-14=-2571/9158, 9-11=-1654/5916
WEBS 3-14=-34/652, 7-11=0/558, 3-13=-969/3464, 7-12=-1015/3644, 4-13=-962/484, 4-12=-41/103, 5-12=-1021/516

NOTES

1) 2-ply truss to be connected together with 10d (0.131"x3") nails as follows:
Top chords connected as follows: 2x4 - 1 row at 0-9-0 oc.
Bottom chords connected as follows: 2x6 - 2 rows staggered at 0-9-0 oc.
Web connected as follows: 2x3 - 1 row at 0-9-0 oc.
2) All loads are considered equally applied to all plies, except if noted as front (F) or back (B) face in the LOAD CASE(S) section. Ply to ply connections have been provided to distribute only loads noted as (F) or (B), unless otherwise indicated.
3) Unbalanced roof live loads have been considered for this design.
4) Wind: ASCE 7-16; Vult=115mph (3-second gust) Vasd=91mph; TCDL=6.0psf; BCDL=6.0psf; h=35ft; Ke=1.00; Cat. II; Exp C; Enclosed; MWFRS (envelope) exterior zone and C-C Exterior(2E) -0-10-8 to 4-1-8, Interior (1) 4-1-8 to 5-11-4, Exterior(2R) 5-11-4 to 13-0-2, Interior (1) 13-0-2 to 24-0-12, Exterior(2E) 24-0-12 to 30-10-8 zone; cantilever left and right exposed ; end vertical left and right exposed;C-C for members and forces & MWFRS for reactions shown; Lumber DOL=1.60 plate grip DOL=1.60
5) Provide adequate drainage to prevent water ponding.
6) This truss has been designed for a 10.0 psf bottom chord live load nonconcurrent with any other live loads.
7) All bearings are assumed to be SPF No.2 crushing capacity of 425 psi.
8) Provide mechanical connection (by others) of truss to bearing plate capable of withstanding 749 lb uplift at joint 2 and 749 lb uplift at joint 9.
9) This truss is designed in accordance with the 2018 International Residential Code sections R502.11.1 and R802.10.2 and referenced standard ANSI/TPI 1.
10) Graphical purlin representation does not depict the size or the orientation of the purlin along the top and/or bottom chord.
11) Use Simpson Strong-Tie THJA26 (THJA26 on 2 ply, Right Hand Hip) or equivalent at 5-11-10 from the left end to connect truss(es) to back face of bottom chord.
12) Use Simpson Strong-Tie THJA26 (THJA26 on 2 ply, Left Hand Hip) or equivalent at 24-0-6 from the left end to connect truss(es) to back face of bottom chord.
13) Fill all nail holes where hanger is in contact with lumber.
14) "NAILED" indicates Girder: 3-10d (0.148" x 3") toe-nails per NDS guidelines.

LOAD CASE(S) Standard

1) Dead + Roof Live (balanced): Lumber Increase=1.15, Plate Increase=1.15
Uniform Loads (lb/ft)
Vert: 1-3=-70, 3-7=-70, 7-10=-70, 2-9=-20
Concentrated Loads (lb)
Vert: 3=-131 (B), 14=-420 (B), 11=-420 (B), 7=-131 (B), 13=-39 (B), 12=-39 (B), 4=-131 (B), 5=-131 (B), 16=-131 (B), 17=-131 (B), 19=-131 (B), 20=-131 (B), 22=-131 (B), 23=-131 (B), 25=-39 (B), 26=-39 (B), 27=-39 (B), 28=-39 (B), 29=-39 (B), 30=-39 (B)

STATE OF MISSOURI
JIE LU
NUMBER
PE-029327
PROFESSIONAL ENGINEER

June 26,2025

WARNING - Verify design parameters and READ NOTES ON THIS AND INCLUDED MITEK REFERENCE PAGE MII-7473 rev. 1/2/2023 BEFORE USE.
Design valid for use only with MiTek® connectors. This design is based only upon parameters shown, and is for an individual building component, not a truss system. Before use, the building designer must verify the applicability of design parameters and properly incorporate this design into the overall building design. Bracing indicated is to prevent buckling of individual truss web and/or chord members only. Additional temporary and permanent bracing is always required for stability and to prevent collapse with possible personal injury and property damage. For general guidance regarding the fabrication, storage, delivery, erection and bracing of trusses and truss systems, see **ANSI/TPI1 Quality Criteria, and DSB-22** available from Truss Plate Institute (www.tpinst.org) and **BCSI Building Component Safety Information** available from the Structural Building Component Association (www.sbcscomponents.com)

MiTek®
16023 Swingley Ridge Rd
Chesterfield, MO 63017
314.434.1200 / MiTek-US.com

RELEASE FOR CONSTRUCTION
AS NOTED ON PLANS REVIEW
DEVELOPMENT SERVICES
LEE'S SUMMIT, MISSOURI
08/15/2025 5:17:49

Job	Truss	Truss Type	Qty	Ply	Roof - HM Lot 196
P250555-01	B2	Hip	1	1	I74462342 Job Reference (optional)

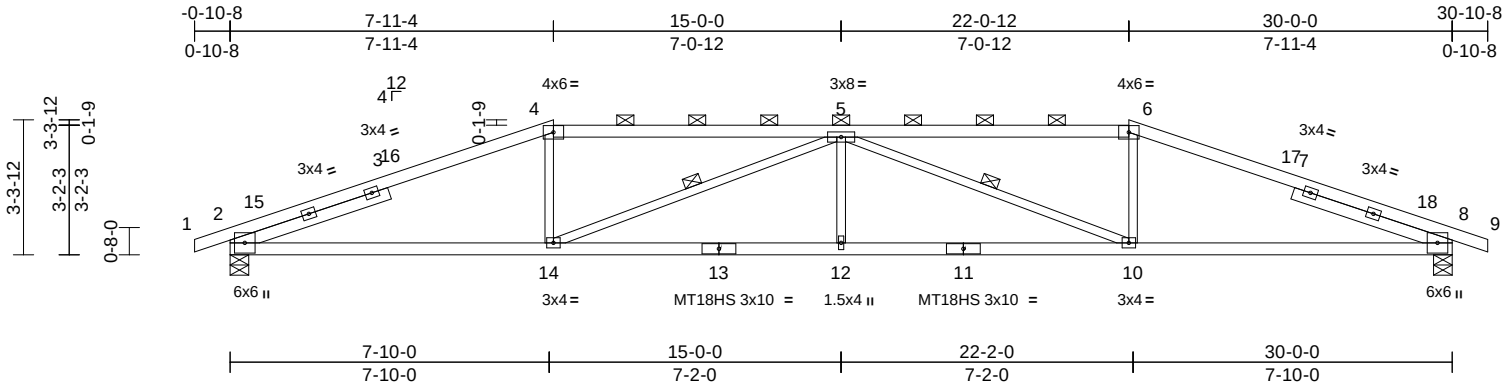

Scale = 1:56.6

Plate Offsets (X, Y): [2:0-3-13,0-1-5], [8:0-3-13,0-1-5]

Loading	(psf)	Spacing	2-0-0	CSI		DEFL	in	(loc)	l/defl	L/d	PLATES	GRIP
TCLL (roof)	25.0	Plate Grip DOL	1.15	TC	0.99	Vert(LL)	-0.27	12	>999	240	MT20	197/144
TCDL	10.0	Lumber DOL	1.15	BC	0.94	Vert(CT)	-0.51	12-14	>708	180	MT18HS	244/190
BCLL	0.0	Rep Stress Incr	YES	WB	0.66	Horz(CT)	0.15	8	n/a	n/a		
BCDL	10.0	Code	IRC2018/TPI2014	Matrix-S							Weight: 124 lb	FT = 20%

LUMBER

TOP CHORD 2x4 SP 1650F 1.5E
BOT CHORD 2x4 SP 1650F 1.5E *Except* 13-11:2x4 SP No.2
WEBS 2x3 SPF No.2
SLIDER Left 2x4 SP No.2 -- 4-1-2, Right 2x4 SP No.2 -- 4-1-2

BRACING

TOP CHORD Structural wood sheathing directly applied, except
2-0-0 oc purlins (3-5-2 max.): 4-6.
BOT CHORD Rigid ceiling directly applied or 2-2-0 oc bracing.
WEBS 1 Row at midpt 5-14, 5-10

REACTIONS (size) 2=0-5-8, 8=0-5-8
Max Horiz 2=-54 (LC 17)
Max Uplift 2=-319 (LC 8), 8=-319 (LC 9)
Max Grav 2=1411 (LC 1), 8=1411 (LC 1)

FORCES (lb) - Maximum Compression/Maximum Tension
TOP CHORD 1-2=-5/0, 2-4=-2989/766, 4-5=-2711/762, 5-6=-2711/762, 6-8=-2989/766, 8-9=-5/0
BOT CHORD 2-14=-617/2727, 12-14=-858/3631, 10-12=-858/3631, 8-10=-624/2727
WEBS 4-14=-12/586, 5-14=-1170/284, 5-12=0/269, 5-10=-1170/283, 6-10=-12/586

NOTES

1) Unbalanced roof live loads have been considered for this design.
2) Wind: ASCE 7-16; Vult=115mph (3-second gust) Vasd=91mph; TCDL=6.0psf; BCDL=6.0psf; h=35ft; Ke=1.00; Cat. II; Exp C; Enclosed; MWFRS (envelope) exterior zone and C-C Exterior(2E) -0-10-8 to 4-1-8, Interior (1) 4-1-8 to 7-11-4, Exterior(2R) 7-11-4 to 15-0-0, Interior (1) 15-0-0 to 22-0-12, Exterior(2R) 22-0-12 to 29-1-10, Interior (1) 29-1-10 to 30-10-8 zone; cantilever left and right exposed ; end vertical left and right exposed;C-C for members and forces & MWFRS for reactions shown; Lumber DOL=1.60 plate grip DOL=1.60
3) Provide adequate drainage to prevent water ponding.
4) All plates are MT20 plates unless otherwise indicated.
5) This truss has been designed for a 10.0 psf bottom chord live load nonconcurrent with any other live loads.
6) All bearings are assumed to be SP 1650F 1.5E crushing capacity of 565 psi.
7) Provide mechanical connection (by others) of truss to bearing plate capable of withstanding 319 lb uplift at joint 2 and 319 lb uplift at joint 8.
8) This truss is designed in accordance with the 2018 International Residential Code sections R502.11.1 and R802.10.2 and referenced standard ANSI/TPI 1.
9) Graphical purlin representation does not depict the size or the orientation of the purlin along the top and/or bottom chord.

LOAD CASE(S) Standard

STATE OF MISSOURI
JIE LU
NUMBER
PE-029327
PROFESSIONAL ENGINEER

June 26,2025

WARNING - Verify design parameters and READ NOTES ON THIS AND INCLUDED MITEK REFERENCE PAGE MII-7473 rev. 1/2/2023 BEFORE USE.
Design valid for use only with MiTek® connectors. This design is based only upon parameters shown, and is for an individual building component, not a truss system. Before use, the building designer must verify the applicability of design parameters and properly incorporate this design into the overall building design. Bracing indicated is to prevent buckling of individual truss web and/or chord members only. Additional temporary and permanent bracing is always required for stability and to prevent collapse with possible personal injury and property damage. For general guidance regarding the fabrication, storage, delivery, erection and bracing of trusses and truss systems, see **ANSI/TPI1 Quality Criteria, and DSB-22** available from Truss Plate Institute (www.tpinst.org) and **BCSI Building Component Safety Information** available from the Structural Building Component Association (www.sbcscomponents.com)

MiTek®
16023 Swingley Ridge Rd
Chesterfield, MO 63017
314.434.1200 / MiTek-US.com

RELEASE FOR CONSTRUCTION
AS NOTED ON PLANS REVIEW
DEVELOPMENT SERVICES
LEE'S SUMMIT, MISSOURI
08/15/2025 5:17:49

Job	Truss	Truss Type	Qty	Ply	Roof - HM Lot 196
P250555-01	B3	Hip	1	1	I74462343 Job Reference (optional)

Premier Building Supply (Springhill, KS), Spring Hills, KS - 66083,

Run: 8.63 S Sep 26 2024 Print: 8.630 S Sep 26 2024 MiTek Industries, Inc. Wed Jun 25 09:29:32 Page: 1
ID:Dl2rKrez9psFISeRTnqVxKzEAIn-RfC?PsB70Hq3NSgPqnL8w3uITXbGKWrCDoi7J4zJC?f

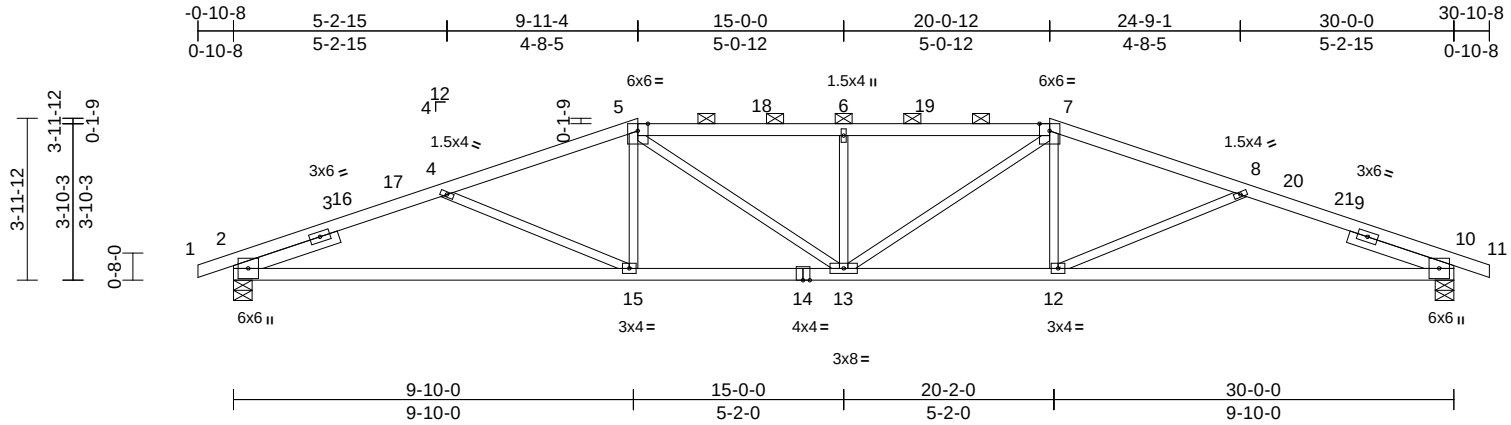

Scale = 1:56.6

Plate Offsets (X, Y): [2:0-3-13,0-1-5], [10:0-3-13,0-1-5], [10:Edge,0-0-0]

Loading	(psf)	Spacing	2-0-0	CSI		DEFL	in	(loc)	l/defl	L/d	PLATES	GRIP
TCLL (roof)	25.0	Plate Grip DOL	1.15	TC	0.85	Vert(LL)	-0.25	2-15	>999	240	MT20	197/144
TCDL	10.0	Lumber DOL	1.15	BC	0.69	Vert(CT)	-0.54	2-15	>661	180		
BCLL	0.0	Rep Stress Incr	YES	WB	0.20	Horz(CT)	0.12	10	n/a	n/a		
BCDL	10.0	Code	IRC2018/TPI2014	Matrix-S							Weight: 128 lb	FT = 20%

LUMBER

TOP CHORD 2x4 SP No.2
BOT CHORD 2x4 SP 1650F 1.5E
WEBS 2x3 SPF No.2
SLIDER Left 2x4 SP No.2 -- 2-8-8, Right 2x4 SP No.2 -- 2-8-8

BRACING

TOP CHORD Structural wood sheathing directly applied or 2-2-0 oc purlins, except 2-0-0 oc purlins (3-1-0 max.): 5-7.
BOT CHORD Rigid ceiling directly applied or 8-0-15 oc bracing.

REACTIONS (size) 2=0-5-8, 10=0-5-8
Max Horiz 2=-67 (LC 17)
Max Uplift 2=-310 (LC 8), 10=-310 (LC 9)
Max Grav 2=1411 (LC 1), 10=1411 (LC 1)

FORCES (lb) - Maximum Compression/Maximum Tension
TOP CHORD 1-2=-5/0, 2-4=-2965/876, 4-5=-2701/736, 5-6=-2880/867, 6-7=-2880/867, 7-8=-2701/736, 8-10=-2965/876, 10-11=-5/0
BOT CHORD 2-15=-759/2687, 13-15=-568/2532, 12-13=-564/2532, 10-12=-756/2687
WEBS 5-15=0/351, 5-13=-187/570, 6-13=-448/227, 7-13=-188/570, 7-12=0/351, 4-15=-194/230, 8-12=-194/231

NOTES

1) Unbalanced roof live loads have been considered for this design.
2) Wind: ASCE 7-16; Vult=115mph (3-second gust) Vasd=91mph; TCDL=6.0psf; BCDL=6.0psf; h=35ft; Ke=1.00; Cat. II; Exp C; Enclosed; MWFRS (envelope) exterior zone and C-C Exterior(2E) -0-10-8 to 4-1-8, Interior (1) 4-1-8 to 9-11-4, Exterior(2R) 9-11-4 to 17-0-2, Interior (1) 17-0-2 to 20-0-12, Exterior(2R) 20-0-12 to 27-1-10, Interior (1) 27-1-10 to 30-10-8 zone; cantilever left and right exposed ; end vertical left and right exposed;C-C for members and forces & MWFRS for reactions shown; Lumber DOL=1.60 plate grip DOL=1.60
3) Provide adequate drainage to prevent water ponding.
4) This truss has been designed for a 10.0 psf bottom chord live load nonconcurrent with any other live loads.
5) All bearings are assumed to be SP 1650F 1.5E crushing capacity of 565 psi.
6) Provide mechanical connection (by others) of truss to bearing plate capable of withstanding 310 lb uplift at joint 2 and 310 lb uplift at joint 10.
7) This truss is designed in accordance with the 2018 International Residential Code sections R502.11.1 and R802.10.2 and referenced standard ANSI/TPI 1.
8) Graphical purlin representation does not depict the size or the orientation of the purlin along the top and/or bottom chord.

LOAD CASE(S) Standard

June 26,2025

WARNING - Verify design parameters and READ NOTES ON THIS AND INCLUDED MITEK REFERENCE PAGE MII-7473 rev. 1/2/2023 BEFORE USE.
Design valid for use only with MiTek® connectors. This design is based only upon parameters shown, and is for an individual building component, not a truss system. Before use, the building designer must verify the applicability of design parameters and properly incorporate this design into the overall building design. Bracing indicated is to prevent buckling of individual truss web and/or chord members only. Additional temporary and permanent bracing is always required for stability and to prevent collapse with possible personal injury and property damage. For general guidance regarding the fabrication, storage, delivery, erection and bracing of trusses and truss systems, see **ANSI/TPI1 Quality Criteria, and DSB-22** available from Truss Plate Institute (www.tpinst.org) and **BCSI Building Component Safety Information** available from the Structural Building Component Association (www.sbcscomponents.com)

MiTek®
16023 Swingley Ridge Rd
Chesterfield, MO 63017
314.434.1200 / MiTek-US.com

RELEASE FOR CONSTRUCTION
AS NOTED ON PLANS REVIEW
DEVELOPMENT SERVICES
LEE'S SUMMIT, MISSOURI
08/15/2025 5:17:49

Job	Truss	Truss Type	Qty	Ply	Roof - HM Lot 196
P250555-01	B4	Hip	1	1	I74462344 Job Reference (optional)

Premier Building Supply (Springhill, KS), Spring Hills, KS - 66083, Run: 8.63 S Sep 26 2024 Print: 8.630 S Sep 26 2024 MiTek Industries, Inc. Wed Jun 25 09:29:32 Page: 1
ID:hxcEYAfbw7_6vcDd0VLkUXzEAIm-RfC?PsB70Hq3NSgPqnL8w3uITXbGKWrCDoi7J4zJC?f

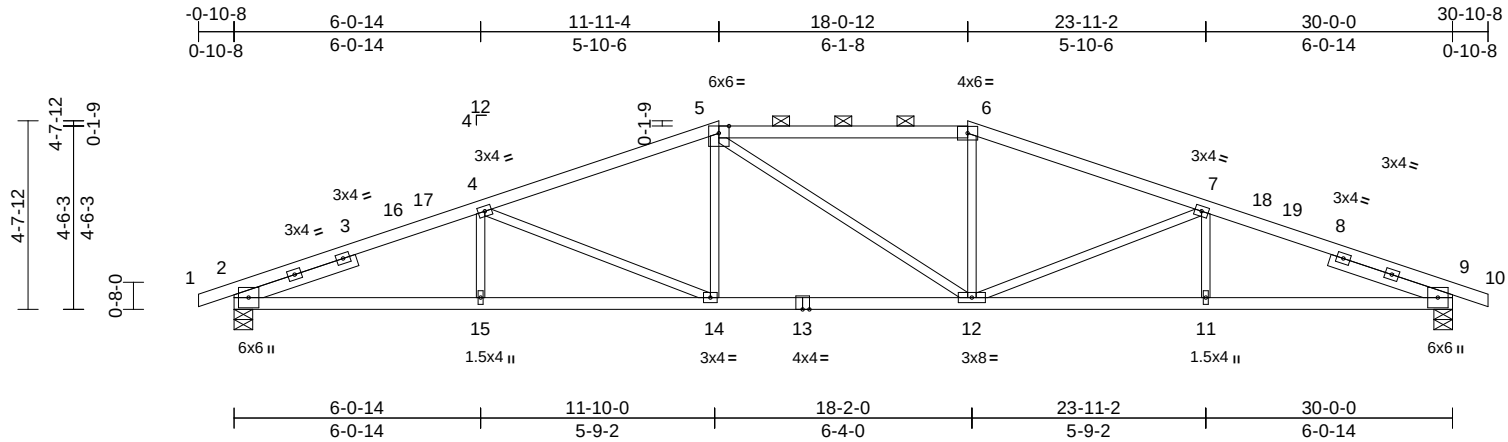

Scale = 1:56.7

Plate Offsets (X, Y): [2:0-3-13,0-1-5], [9:0-3-13,0-1-5]

Loading	(psf)	Spacing	2-0-0	CSI		DEFL	in	(loc)	l/defl	L/d	PLATES	GRIP
TCLL (roof)	25.0	Plate Grip DOL	1.15	TC	0.95	Vert(LL)	-0.20	14-15	>999	240	MT20	197/144
TCDL	10.0	Lumber DOL	1.15	BC	0.78	Vert(CT)	-0.38	12-14	>945	180		
BCLL	0.0	Rep Stress Incr	YES	WB	0.50	Horz(CT)	0.13	9	n/a	n/a		
BCDL	10.0	Code	IRC2018/TPI2014	Matrix-S							Weight: 129 lb	FT = 20%

LUMBER

TOP CHORD 2x4 SP No.2
BOT CHORD 2x4 SP No.2
WEBS 2x3 SPF No.2
SLIDER Left 2x4 SP No.2 -- 3-2-0, Right 2x4 SP No.2 -- 3-2-0

BRACING

TOP CHORD Structural wood sheathing directly applied, except 2-0-0 oc purlins (2-2-0 max.): 5-6.
BOT CHORD Rigid ceiling directly applied or 6-10-7 oc bracing.

REACTIONS (size) 2=0-5-8, 9=0-5-8
Max Horiz 2=79 (LC 12)
Max Uplift 2=-298 (LC 8), 9=-298 (LC 9)
Max Grav 2=1411 (LC 1), 9=1411 (LC 1)

FORCES (lb) - Maximum Compression/Maximum Tension
TOP CHORD 1-2=-5/0, 2-4=-3028/823, 4-5=-2489/736, 5-6=-2306/761, 6-7=-2490/758, 7-9=-3027/850, 9-10=-5/0
BOT CHORD 2-15=-709/2752, 14-15=-709/2752, 12-14=-535/2305, 11-12=-731/2752, 9-11=-731/2752
WEBS 4-15=0/228, 4-14=-517/211, 5-14=-9/365, 5-12=-221/222, 6-12=-11/365, 7-12=-517/212, 7-11=0/227

NOTES

1) Unbalanced roof live loads have been considered for this design.
2) Wind: ASCE 7-16; Vult=115mph (3-second gust) Vasd=91mph; TCDL=6.0psf; BCDL=6.0psf; h=35ft; Ke=1.00; Cat. II; Exp C; Enclosed; MWFRS (envelope) exterior zone and C-C Exterior(2E) -0-10-8 to 4-1-8, Interior (1) 4-1-8 to 11-11-4, Exterior(2E) 11-11-4 to 18-0-12, Exterior(2R) 18-0-12 to 25-1-10, Interior (1) 25-1-10 to 30-10-8 zone; cantilever left and right exposed ; end vertical left and right exposed;C-C for members and forces & MWFRS for reactions shown; Lumber DOL=1.60 plate grip DOL=1.60
3) Provide adequate drainage to prevent water ponding.
4) This truss has been designed for a 10.0 psf bottom chord live load nonconcurrent with any other live loads.
5) All bearings are assumed to be SP No.2 crushing capacity of 565 psi.
6) Provide mechanical connection (by others) of truss to bearing plate capable of withstanding 298 lb uplift at joint 2 and 298 lb uplift at joint 9.
7) This truss is designed in accordance with the 2018 International Residential Code sections R502.11.1 and R802.10.2 and referenced standard ANSI/TPI 1.
8) Graphical purlin representation does not depict the size or the orientation of the purlin along the top and/or bottom chord.

LOAD CASE(S) Standard

STATE OF MISSOURI
JIE LU
NUMBER
PE-029327
PROFESSIONAL ENGINEER

June 26,2025

WARNING - Verify design parameters and READ NOTES ON THIS AND INCLUDED MITEK REFERENCE PAGE MII-7473 rev. 1/2/2023 BEFORE USE.
Design valid for use only with MiTek® connectors. This design is based only upon parameters shown, and is for an individual building component, not a truss system. Before use, the building designer must verify the applicability of design parameters and properly incorporate this design into the overall building design. Bracing indicated is to prevent buckling of individual truss web and/or chord members only. Additional temporary and permanent bracing is always required for stability and to prevent collapse with possible personal injury and property damage. For general guidance regarding the fabrication, storage, delivery, erection and bracing of trusses and truss systems, see **ANSI/TPI1 Quality Criteria, and DSB-22** available from Truss Plate Institute (www.tpinst.org) and **BCSI Building Component Safety Information** available from the Structural Building Component Association (www.sbcscomponents.com)

MiTek®
16023 Swingley Ridge Rd
Chesterfield, MO 63017
314.434.1200 / MiTek-US.com

RELEASE FOR CONSTRUCTION
AS NOTED ON PLANS REVIEW
DEVELOPMENT SERVICES
LEE'S SUMMIT, MISSOURI
08/15/2025 5:17:49

Job	Truss	Truss Type	Qty	Ply	Roof - HM Lot 196
P250555-01	C1	Hip Girder	1	1	I74462345 Job Reference (optional)

Premier Building Supply (Springhill, KS), Spring Hills, KS - 66083, Run: 8.63 S Sep 26 2024 Print: 8.630 S Sep 26 2024 MiTek Industries, Inc. Wed Jun 25 09:29:33 Page: 1
ID:hxcEYAfbw7_6vcDd0VLkUXzEAIm-RfC?PsB70Hq3NSgPqnL8w3uITXbGKWrCDoi7J4zJC?f

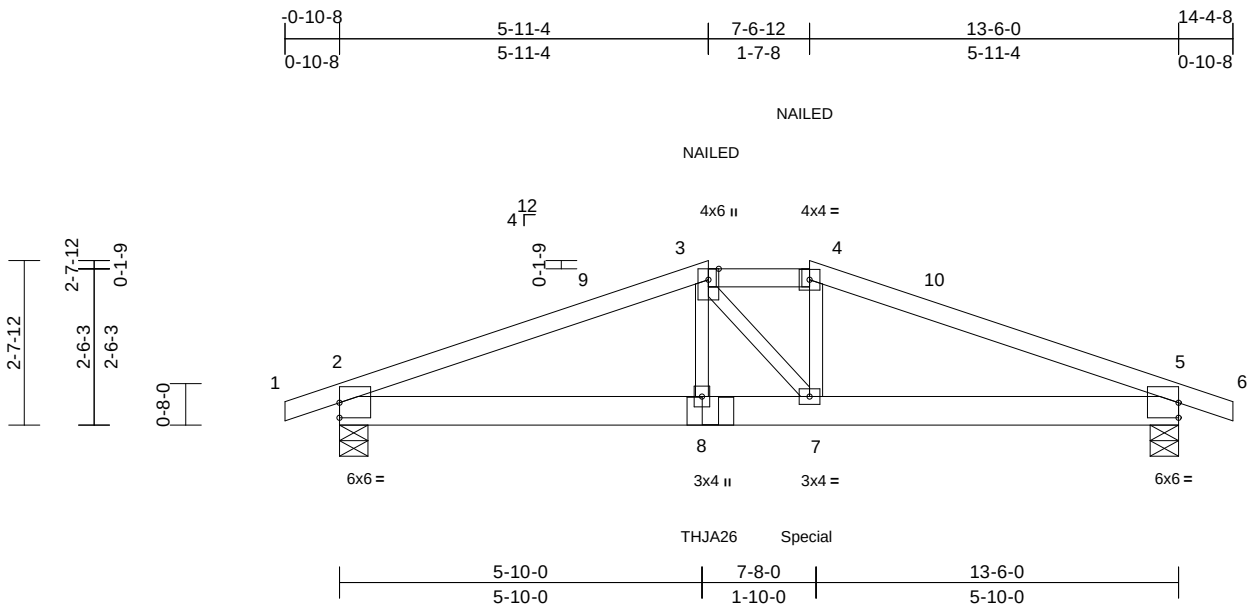

Scale = 1:37.1

Plate Offsets (X, Y): [2:Edge,0-2-14], [5:Edge,0-2-14]

Loading	(psf)	Spacing	2-0-0	CSI		DEFL	in	(loc)	l/defl	L/d	PLATES	GRIP
TCLL (roof)	25.0	Plate Grip DOL	1.15	TC	0.98	Vert(LL)	-0.07	7-8	>999	240	MT20	197/144
TCDL	10.0	Lumber DOL	1.15	BC	0.81	Vert(CT)	-0.12	7-8	>999	180		
BCLL	0.0	Rep Stress Incr	NO	WB	0.20	Horz(CT)	0.03	5	n/a	n/a		
BCDL	10.0	Code	IRC2018/TPI2014	Matrix-S							Weight: 53 lb	FT = 20%

LUMBER
TOP CHORD 2x4 SP No.2
BOT CHORD 2x6 SPF No.2
WEBS 2x3 SPF No.2

BRACING
TOP CHORD Structural wood sheathing directly applied or 2-7-4 oc purlins, except 2-0-0 oc purlins (3-9-1 max.): 3-4.
BOT CHORD Rigid ceiling directly applied or 8-3-2 oc bracing.

REACTIONS (size) 2=0-5-8, 5=0-5-8
Max Horiz 2=-42 (LC 34)
Max Uplift 2=-352 (LC 8), 5=-352 (LC 9)
Max Grav 2=1216 (LC 1), 5=1216 (LC 1)

FORCES (lb) - Maximum Compression/Maximum Tension
TOP CHORD 1-2=0/1, 2-3=-2527/918, 3-4=-2267/920, 4-5=-2534/923, 5-6=0/1
BOT CHORD 2-8=-752/2285, 7-8=-748/2261, 5-7=-764/2292
WEBS 3-8=-87/521, 3-7=-122/143, 4-7=-102/579

NOTES
1) Unbalanced roof live loads have been considered for this design.
2) Wind: ASCE 7-16; Vult=115mph (3-second gust) Vasd=91mph; TCDL=6.0psf; BCDL=6.0psf; h=35ft; Ke=1.00; Cat. II; Exp C; Enclosed; MWFRS (envelope) exterior zone and C-C Exterior(2E) -0-10-8 to 4-1-8, Interior (1) 4-1-8 to 5-11-4, Exterior(2E) 5-11-4 to 14-4-8 zone; cantilever left and right exposed ; end vertical left and right exposed;C-C for members and forces & MWFRS for reactions shown; Lumber DOL=1.60 plate grip DOL=1.60
3) Provide adequate drainage to prevent water ponding.
4) This truss has been designed for a 10.0 psf bottom chord live load nonconcurrent with any other live loads.
5) All bearings are assumed to be SPF No.2 crushing capacity of 425 psi.
6) Provide mechanical connection (by others) of truss to bearing plate capable of withstanding 352 lb uplift at joint 2 and 352 lb uplift at joint 5.
7) This truss is designed in accordance with the 2018 International Residential Code sections R502.11.1 and R802.10.2 and referenced standard ANSI/TPI 1.
8) Graphical purlin representation does not depict the size or the orientation of the purlin along the top and/or bottom chord.
9) Use Simpson Strong-Tie THJA26 (THJA26 on 1 ply, Left Hand Hip) or equivalent at 5-11-10 from the left end to connect truss(es) to front face of bottom chord.
10) Fill all nail holes where hanger is in contact with lumber.
11) "NAILED" indicates Girder: 3-10d (0.148" x 3") toe-nails per NDS guidelines.
12) Hanger(s) or other connection device(s) shall be provided sufficient to support concentrated load(s) 420 lb down and 109 lb up at 7-6-0 on bottom chord. The design/selection of such connection device(s) is the responsibility of others.
13) In the LOAD CASE(S) section, loads applied to the face of the truss are noted as front (F) or back (B).

LOAD CASE(S) Standard
1) Dead + Roof Live (balanced): Lumber Increase=1.15, Plate Increase=1.15
Uniform Loads (lb/ft)
Vert: 1-3=-70, 3-4=-70, 4-6=-70, 2-5=-20
Concentrated Loads (lb)
Vert: 3=-131 (F), 4=-131 (F), 8=-420 (F), 7=-420 (F)

June 26,2025

WARNING - Verify design parameters and READ NOTES ON THIS AND INCLUDED MITEK REFERENCE PAGE MII-7473 rev. 1/2/2023 BEFORE USE.
Design valid for use only with MiTek® connectors. This design is based only upon parameters shown, and is for an individual building component, not a truss system. Before use, the building designer must verify the applicability of design parameters and properly incorporate this design into the overall building design. Bracing indicated is to prevent buckling of individual truss web and/or chord members only. Additional temporary and permanent bracing is always required for stability and to prevent collapse with possible personal injury and property damage. For general guidance regarding the fabrication, storage, delivery, erection and bracing of trusses and truss systems, see **ANSI/TPI1 Quality Criteria, and DSB-22** available from Truss Plate Institute (www.tpinst.org) and **BCSI Building Component Safety Information** available from the Structural Building Component Association (www.sbcscomponents.com)

MiTek®
16023 Swingley Ridge Rd
Chesterfield, MO 63017
314.434.1200 / MiTek-US.com

RELEASE FOR CONSTRUCTION
AS NOTED ON PLANS REVIEW
DEVELOPMENT SERVICES
LEE'S SUMMIT, MISSOURI
08/15/2025 5:17:49

Job	Truss	Truss Type	Qty	Ply	Roof - HM Lot 196
P250555-01	C2	Common	1	1	I74462346 Job Reference (optional)

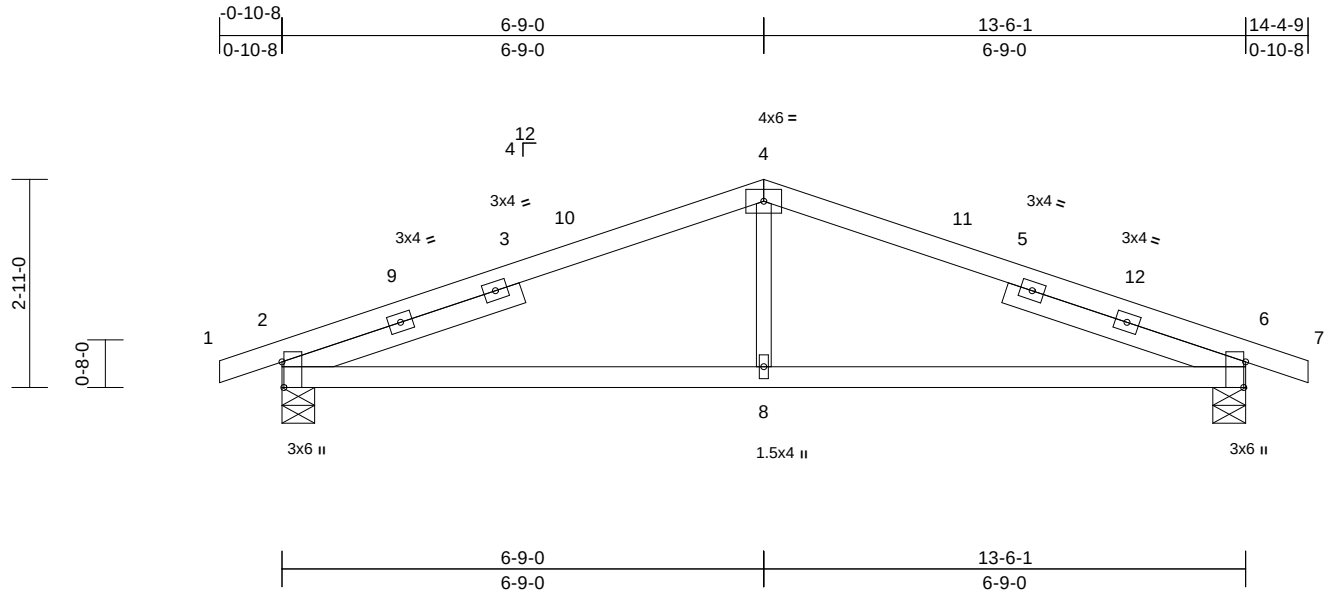

Scale = 1:32.3

Plate Offsets (X, Y): [2:0-4-5,Edge], [6:0-4-5,Edge]

Loading	(psf)	Spacing	2-0-0	CSI		DEFL	in	(loc)	l/defl	L/d	PLATES	GRIP
TCLL (roof)	25.0	Plate Grip DOL	1.15	TC	0.69	Vert(LL)	-0.05	6-8	>999	240	MT20	197/144
TCDL	10.0	Lumber DOL	1.15	BC	0.50	Vert(CT)	-0.10	6-8	>999	180		
BCLL	0.0	Rep Stress Incr	YES	WB	0.10	Horz(CT)	0.02	6	n/a	n/a		
BCDL	10.0	Code	IRC2018/TPI2014	Matrix-S							Weight: 57 lb	FT = 20%

LUMBER

TOP CHORD 2x4 SP No.2
BOT CHORD 2x4 SP No.2
WEBS 2x3 SPF No.2
SLIDER Left 2x4 SP No.2 -- 3-6-5, Right 2x4 SP No.2 -- 3-6-5

BRACING

TOP CHORD Structural wood sheathing directly applied or 4-8-11 oc purlins.
BOT CHORD Rigid ceiling directly applied or 10-0-0 oc bracing.

REACTIONS (size) 2=0-5-8, 6=0-5-8
Max Horiz 2=-48 (LC 17)
Max Uplift 2=-147 (LC 8), 6=-147 (LC 9)
Max Grav 2=669 (LC 1), 6=669 (LC 1)

FORCES (lb) - Maximum Compression/Maximum Tension
TOP CHORD 1-2=-5/0, 2-4=-998/439, 4-6=-998/439, 6-7=-5/0
BOT CHORD 2-8=-304/864, 6-8=-304/864
WEBS 4-8=0/307

NOTES

1) Unbalanced roof live loads have been considered for this design.
2) Wind: ASCE 7-16; Vult=115mph (3-second gust) Vasd=91mph; TCDL=6.0psf; BCDL=6.0psf; h=35ft; Ke=1.00; Cat. II; Exp C; Enclosed; MWFRS (envelope) exterior zone and C-C Exterior(2E) -0-10-8 to 4-1-8, Interior (1) 4-1-8 to 6-9-0, Exterior(2R) 6-9-0 to 11-9-0, Interior (1) 11-9-0 to 14-4-9 zone; cantilever left and right exposed ; end vertical left and right exposed;C-C for members and forces & MWFRS for reactions shown; Lumber DOL=1.60 plate grip DOL=1.60
3) This truss has been designed for a 10.0 psf bottom chord live load nonconcurrent with any other live loads.
4) All bearings are assumed to be SP No.2 crushing capacity of 565 psi.
5) Provide mechanical connection (by others) of truss to bearing plate capable of withstanding 147 lb uplift at joint 2 and 147 lb uplift at joint 6.
6) This truss is designed in accordance with the 2018 International Residential Code sections R502.11.1 and R802.10.2 and referenced standard ANSI/TPI 1.

LOAD CASE(S) Standard

June 26,2025

WARNING - Verify design parameters and READ NOTES ON THIS AND INCLUDED MITEK REFERENCE PAGE MII-7473 rev. 1/2/2023 BEFORE USE.
Design valid for use only with MiTek® connectors. This design is based only upon parameters shown, and is for an individual building component, not a truss system. Before use, the building designer must verify the applicability of design parameters and properly incorporate this design into the overall building design. Bracing indicated is to prevent buckling of individual truss web and/or chord members only. Additional temporary and permanent bracing is always required for stability and to prevent collapse with possible personal injury and property damage. For general guidance regarding the fabrication, storage, delivery, erection and bracing of trusses and truss systems, see **ANSI/TPI1 Quality Criteria, and DSB-22** available from Truss Plate Institute (www.tpinst.org) and **BCSI Building Component Safety Information** available from the Structural Building Component Association (www.sbcscomponents.com)

MiTek®
16023 Swingley Ridge Rd
Chesterfield, MO 63017
314.434.1200 / MiTek-US.com

RELEASE FOR CONSTRUCTION
AS NOTED ON PLANS REVIEW
DEVELOPMENT SERVICES
LEE'S SUMMIT, MISSOURI
08/15/2025 5:17:49

Job	Truss	Truss Type	Qty	Ply	Roof - HM Lot 196
P250555-01	C3	Common Girder	1	2	I74462347 Job Reference (optional)

Premier Building Supply (Springhill, KS), Spring Hills, KS - 66083, Run: 8.63 S Sep 26 2024 Print: 8.630 S Sep 26 2024 MiTek Industries, Inc. Wed Jun 25 09:29:33 Page: 1
ID:ROLzlJXFVDQ24?xTe7QBf2zbfH2-RfC?PsB70Hq3NSgPqnL8w3uITXbGKWrCDoi7J4zJC?f

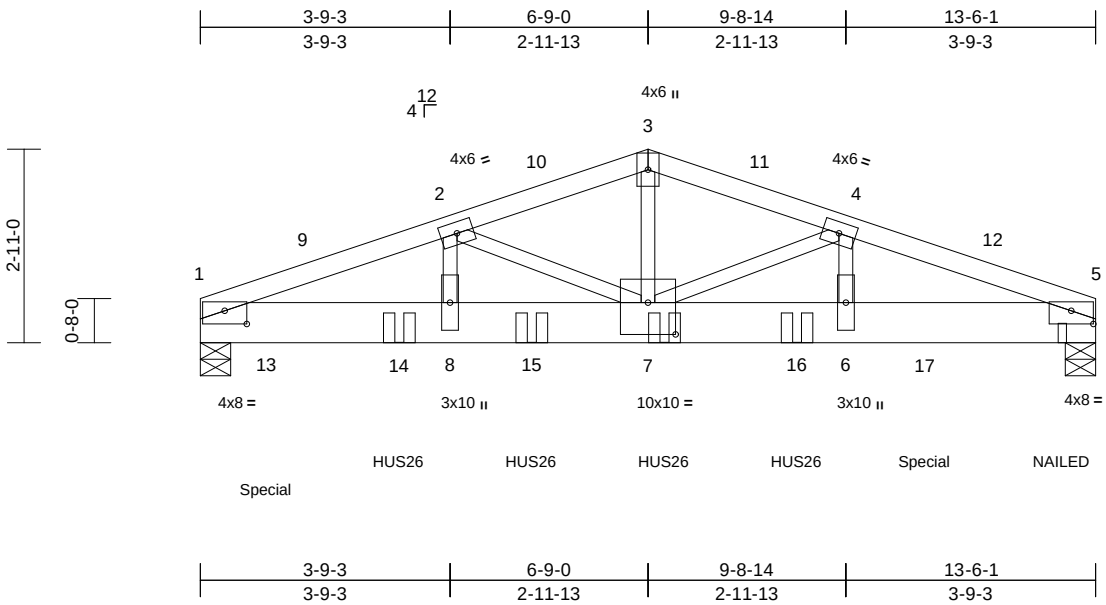

Scale = 1:34.8

Plate Offsets (X, Y): [1:0-4-0,0-2-6], [5:0-4-0,0-2-6], [7:0-5-0,0-5-12]

Loading	(psf)	Spacing	2-0-0	CSI		DEFL	in	(loc)	l/defl	L/d	PLATES	GRIP
TCLL (roof)	25.0	Plate Grip DOL	1.15	TC	0.69	Vert(LL)	-0.11	6-7	>999	240	MT20	244/190
TCDL	10.0	Lumber DOL	1.15	BC	0.58	Vert(CT)	-0.19	6-7	>813	180		
BCLL	0.0	Rep Stress Incr	NO	WB	0.84	Horz(CT)	0.03	5	n/a	n/a		
BCDL	10.0	Code	IRC2018/TPI2014	Matrix-S							Weight: 142 lb	FT = 20%

LUMBER
TOP CHORD 2x4 SP No.2
BOT CHORD 2x8 SP 2400F 2.0E
WEBS 2x3 SPF No.2

BRACING
TOP CHORD Structural wood sheathing directly applied or 3-2-4 oc purlins.
BOT CHORD Rigid ceiling directly applied or 10-0-0 oc bracing.

REACTIONS (size) 1=0-5-8, 5=0-5-8
Max Horiz 1=46 (LC 16)
Max Uplift 1=-1142 (LC 8), 5=-1294 (LC 9)
Max Grav 1=5604 (LC 1), 5=5540 (LC 1)

FORCES (lb) - Maximum Compression/Maximum Tension
TOP CHORD 1-2=-9784/2388, 2-3=-8189/2091, 3-4=-8188/2090, 4-5=-10475/2729
BOT CHORD 1-8=-2149/8997, 7-8=-2149/8997, 6-7=-2466/9634, 5-6=-2466/9634
WEBS 2-8=-258/1629, 2-7=-1431/345, 3-7=-1167/4870, 4-7=-2141/696, 4-6=-544/2214

NOTES
1) 2-ply truss to be connected together with 10d (0.131"x3") nails as follows:
Top chords connected as follows: 2x4 - 1 row at 0-9-0 oc.
Bottom chords connected as follows: 2x8 - 2 rows staggered at 0-4-0 oc.
Web connected as follows: 2x3 - 1 row at 0-9-0 oc.
2) All loads are considered equally applied to all plies, except if noted as front (F) or back (B) face in the LOAD CASE(S) section. Ply to ply connections have been provided to distribute only loads noted as (F) or (B), unless otherwise indicated.
3) Unbalanced roof live loads have been considered for this design.
4) Wind: ASCE 7-16; Vult=115mph (3-second gust) Vasd=91mph; TCDL=6.0psf; BCDL=6.0psf; h=35ft; Ke=1.00; Cat. II; Exp C; Enclosed; MWFRS (envelope) exterior zone and C-C Exterior(2E) 0-2-12 to 5-2-12, Interior (1) 5-2-12 to 6-9-0, Exterior(2R) 6-9-0 to 11-9-0, Interior (1) 11-9-0 to 13-3-5 zone; cantilever left and right exposed ; end vertical left and right exposed;C-C for members and forces & MWFRS for reactions shown; Lumber DOL=1.60 plate grip DOL=1.60
5) This truss has been designed for a 10.0 psf bottom chord live load nonconcurrent with any other live loads.
6) All bearings are assumed to be SP 2400F 2.0E crushing capacity of 805 psi.
7) Provide mechanical connection (by others) of truss to bearing plate capable of withstanding 1142 lb uplift at joint 1 and 1294 lb uplift at joint 5.
8) This truss is designed in accordance with the 2018 International Residential Code sections R502.11.1 and R802.10.2 and referenced standard ANSI/TPI 1.
9) Use Simpson Strong-Tie HUS26 (14-10d Girder, 4-10d Truss, Single Ply Girder) or equivalent spaced at 2-0-0 oc max. starting at 3-0-0 from the left end to 9-0-0 to connect truss(es) to back face of bottom chord.
10) WARNING: The following hangers are manually applied but fail due to geometric considerations: HUS26 on back face at 3-0-0 from the left end, HUS26 on back face at 5-0-0 from the left end, HUS26 on back face at 7-0-0 from the left end, HUS26 on back face at 9-0-0 from the left end.
11) "NAILED" indicates Girder: 3-10d (0.148" x 3") toe-nails per NDS guidelines.
12) Hanger(s) or other connection device(s) shall be provided sufficient to support concentrated load(s) 1421 lb down and 262 lb up at 1-0-0, and 2714 lb down and 757 lb up at 10-11-3, and 158 lb down and 30 lb up at 13-3-5 on bottom chord. The design/selection of such connection device(s) is the responsibility of others.

LOAD CASE(S) Standard
1) Dead + Roof Live (balanced): Lumber Increase=1.15, Plate Increase=1.15
Uniform Loads (lb/ft)
Vert: 1-3=-70, 3-5=-70, 1-5=-20
Concentrated Loads (lb)
Vert: 5=-158 (B), 7=-1419 (B), 13=-1421 (B), 14=-1419 (B), 15=-1419 (B), 16=-1419 (B), 17=-2714 (B)

June 26,2025

WARNING - Verify design parameters and READ NOTES ON THIS AND INCLUDED MITEK REFERENCE PAGE MII-7473 rev. 1/2/2023 BEFORE USE.
Design valid for use only with MiTek® connectors. This design is based only upon parameters shown, and is for an individual building component, not a truss system. Before use, the building designer must verify the applicability of design parameters and properly incorporate this design into the overall building design. Bracing indicated is to prevent buckling of individual truss web and/or chord members only. Additional temporary and permanent bracing is always required for stability and to prevent collapse with possible personal injury and property damage. For general guidance regarding the fabrication, storage, delivery, erection and bracing of trusses and truss systems, see **ANSI/TPI1 Quality Criteria, and DSB-22** available from Truss Plate Institute (www.tpinst.org) and **BCSI Building Component Safety Information** available from the Structural Building Component Association (www.sbcscomponents.com)

MiTek®
16023 Swingley Ridge Rd
Chesterfield, MO 63017
314.434.1200 / MiTek-US.com

RELEASE FOR CONSTRUCTION
AS NOTED ON PLANS REVIEW
DEVELOPMENT SERVICES
LEE'S SUMMIT, MISSOURI
08/15/2025 5:17:49

Job	Truss	Truss Type	Qty	Ply	Roof - HM Lot 196
P250555-01	CG1	Diagonal Hip Girder	6	1	I74462348 Job Reference (optional)

Premier Building Supply (Springhill, KS), Spring Hills, KS - 66083, Run: 8.63 S Sep 26 2024 Print: 8.630 S Sep 26 2024 MiTek Industries, Inc. Wed Jun 25 09:29:33 Page: 1
ID:GMw5v9djdCcX28U2LMn1svzEAIp-RfC?PsB70Hq3NSgPqnL8w3uITXbGKWrCDoi7J4zJC?f

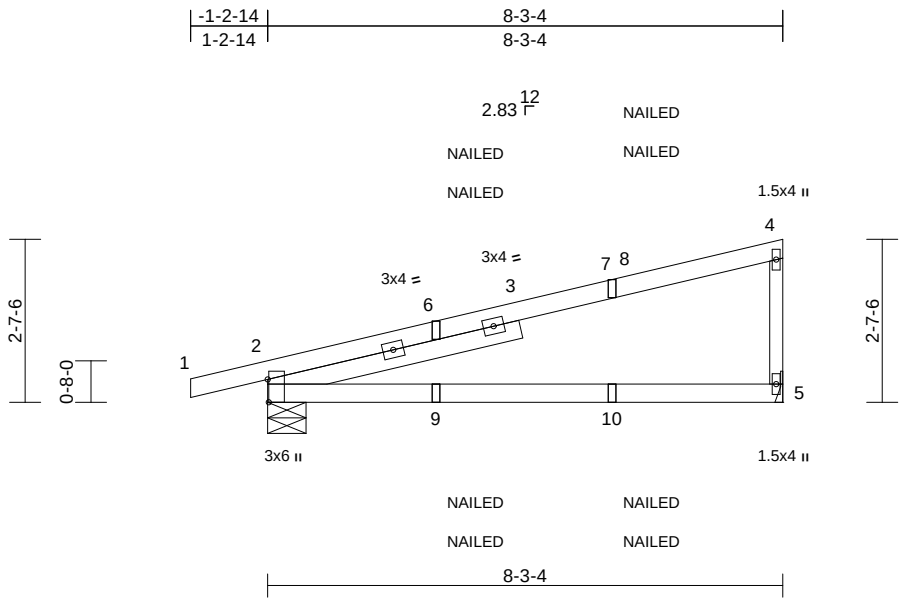

Scale = 1:37

Plate Offsets (X, Y): [2:0-4-6,Edge]

Loading	(psf)	Spacing	2-0-0	CSI		DEFL	in	(loc)	l/defl	L/d	PLATES	GRIP
TCLL (roof)	25.0	Plate Grip DOL	1.15	TC	0.94	Vert(LL)	-0.22	2-5	>454	240	MT20	197/144
TCDL	10.0	Lumber DOL	1.15	BC	0.53	Vert(CT)	-0.43	2-5	>227	180		
BCLL	0.0	Rep Stress Incr	NO	WB	0.00	Horz(CT)	0.00	5	n/a	n/a		
BCDL	10.0	Code	IRC2018/TPI2014	Matrix-P							Weight: 35 lb	FT = 20%

LUMBER
TOP CHORD 2x4 SP 2400F 2.0E
BOT CHORD 2x4 SP 2400F 2.0E
WEBS 2x3 SPF No.2
SLIDER Left 2x4 SP No.2 -- 4-1-15

BRACING
TOP CHORD Structural wood sheathing directly applied or 6-0-0 oc purlins, except end verticals.
BOT CHORD Rigid ceiling directly applied or 10-0-0 oc bracing.

REACTIONS (size) 2=0-7-6, 5= Mechanical
Max Horiz 2=103 (LC 28)
Max Uplift 2=-149 (LC 8), 5=-115 (LC 12)
Max Grav 2=484 (LC 1), 5=410 (LC 1)

FORCES (lb) - Maximum Compression/Maximum Tension
TOP CHORD 1-2=-6/0, 2-4=-140/82, 4-5=-315/306
BOT CHORD 2-5=-47/51

NOTES
1) Wind: ASCE 7-16; Vult=115mph (3-second gust) Vasd=91mph; TCDL=6.0psf; BCDL=6.0psf; h=35ft; Ke=1.00; Cat. II; Exp C; Enclosed; MWFRS (envelope) exterior zone and C-C Corner (3) -1-2-14 to 5-10-0, Exterior(2R) 5-10-0 to 8-2-0 zone; cantilever left and right exposed ; end vertical left and right exposed;C-C for members and forces & MWFRS for reactions shown; Lumber DOL=1.60 plate grip DOL=1.60
2) This truss has been designed for a 10.0 psf bottom chord live load nonconcurrent with any other live loads.
3) Bearings are assumed to be: Joint 2 SP 2400F 2.0E crushing capacity of 805 psi.
4) Refer to girder(s) for truss to truss connections.
5) Provide mechanical connection (by others) of truss to bearing plate capable of withstanding 115 lb uplift at joint 5 and 149 lb uplift at joint 2.
6) This truss is designed in accordance with the 2018 International Residential Code sections R502.11.1 and R802.10.2 and referenced standard ANSI/TPI 1.
7) "NAILED" indicates Girder: 3-10d (0.148" x 3") toe-nails per NDS guidelines.
8) In the LOAD CASE(S) section, loads applied to the face of the truss are noted as front (F) or back (B).

LOAD CASE(S) Standard
1) Dead + Roof Live (balanced): Lumber Increase=1.15, Plate Increase=1.15
Uniform Loads (lb/ft)
Vert: 1-4=-70, 2-5=-20
Concentrated Loads (lb)
Vert: 7=-53 (F=-26, B=-26), 10=-19 (F=-10, B=-10)

STATE OF MISSOURI
JIE LU
NUMBER
PE-029327
PROFESSIONAL ENGINEER

June 26,2025

WARNING - Verify design parameters and READ NOTES ON THIS AND INCLUDED MITEK REFERENCE PAGE MII-7473 rev. 1/2/2023 BEFORE USE.
Design valid for use only with MiTek® connectors. This design is based only upon parameters shown, and is for an individual building component, not a truss system. Before use, the building designer must verify the applicability of design parameters and properly incorporate this design into the overall building design. Bracing indicated is to prevent buckling of individual truss web and/or chord members only. Additional temporary and permanent bracing is always required for stability and to prevent collapse with possible personal injury and property damage. For general guidance regarding the fabrication, storage, delivery, erection and bracing of trusses and truss systems, see **ANSI/TPI1 Quality Criteria, and DSB-22** available from Truss Plate Institute (www.tpinst.org) and **BCSI Building Component Safety Information** available from the Structural Building Component Association (www.sbcscomponents.com)

MiTek®
16023 Swingley Ridge Rd
Chesterfield, MO 63017
314.434.1200 / MiTek-US.com

RELEASE FOR CONSTRUCTION
AS NOTED ON PLANS REVIEW
DEVELOPMENT SERVICES
LEE'S SUMMIT, MISSOURI
08/15/2025 5:17:49

Job	Truss	Truss Type	Qty	Ply	Roof - HM Lot 196
P250555-01	CG2	Diagonal Hip Girder	2	1	I74462349 Job Reference (optional)

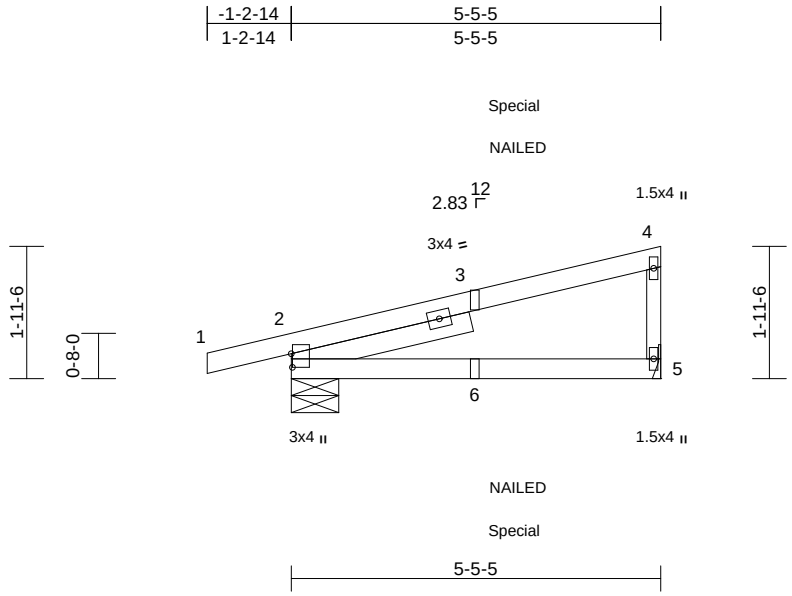

Scale = 1:33.9

Plate Offsets (X, Y): [2:0-2-6,0-0-3]

Loading	(psf)	Spacing	2-0-0	CSI		DEFL	in	(loc)	l/defl	L/d	PLATES	GRIP
TCLL (roof)	25.0	Plate Grip DOL	1.15	TC	0.68	Vert(LL)	-0.05	2-5	>999	240	MT20	197/144
TCDL	10.0	Lumber DOL	1.15	BC	0.39	Vert(CT)	-0.10	2-5	>657	180		
BCLL	0.0	Rep Stress Incr	NO	WB	0.00	Horz(CT)	0.00	5	n/a	n/a		
BCDL	10.0	Code	IRC2018/TPI2014	Matrix-P							Weight: 24 lb	FT = 20%

LUMBER

TOP CHORD 2x4 SP No.2
BOT CHORD 2x4 SP No.2
WEBS 2x3 SPF No.2
SLIDER Left 2x4 SP No.2 -- 2-8-8

BRACING

TOP CHORD Structural wood sheathing directly applied or 5-5-5 oc purlins, except end verticals.
BOT CHORD Rigid ceiling directly applied or 10-0-0 oc bracing.

REACTIONS (size) 2=0-8-6, 5= Mechanical
Max Horiz 2=73 (LC 9)
Max Uplift 2=-111 (LC 8), 5=-54 (LC 12)
Max Grav 2=337 (LC 1), 5=230 (LC 1)

FORCES (lb) - Maximum Compression/Maximum Tension
TOP CHORD 1-2=-6/0, 2-4=-95/60, 4-5=-177/225
BOT CHORD 2-5=-34/36

NOTES

1) Wind: ASCE 7-16; Vult=115mph (3-second gust) Vasd=91mph; TCDL=6.0psf; BCDL=6.0psf; h=35ft; Ke=1.00; Cat. II; Exp C; Enclosed; MWFRS (envelope) exterior zone and C-C Corner (3) zone; cantilever left and right exposed ; end vertical left and right exposed;C-C for members and forces & MWFRS for reactions shown; Lumber DOL=1.60 plate grip DOL=1.60
2) This truss has been designed for a 10.0 psf bottom chord live load nonconcurrent with any other live loads.
3) Bearings are assumed to be: Joint 2 SP No.2 crushing capacity of 565 psi.
4) Refer to girder(s) for truss to truss connections.
5) Provide mechanical connection (by others) of truss to bearing plate capable of withstanding 54 lb uplift at joint 5 and 111 lb uplift at joint 2.
6) This truss is designed in accordance with the 2018 International Residential Code sections R502.11.1 and R802.10.2 and referenced standard ANSI/TPI 1.
7) "NAILED" indicates Girder: 3-10d (0.148" x 3") toe-nails per NDS guidelines.
8) In the LOAD CASE(S) section, loads applied to the face of the truss are noted as front (F) or back (B).

LOAD CASE(S) Standard

1) Dead + Roof Live (balanced): Lumber Increase=1.15, Plate Increase=1.15
Uniform Loads (lb/ft)
Vert: 1-4=-70, 2-5=-20

June 26,2025

WARNING - Verify design parameters and READ NOTES ON THIS AND INCLUDED MITEK REFERENCE PAGE MII-7473 rev. 1/2/2023 BEFORE USE.
Design valid for use only with MiTek® connectors. This design is based only upon parameters shown, and is for an individual building component, not a truss system. Before use, the building designer must verify the applicability of design parameters and properly incorporate this design into the overall building design. Bracing indicated is to prevent buckling of individual truss web and/or chord members only. Additional temporary and permanent bracing is always required for stability and to prevent collapse with possible personal injury and property damage. For general guidance regarding the fabrication, storage, delivery, erection and bracing of trusses and truss systems, see **ANSI/TPI1 Quality Criteria, and DSB-22** available from Truss Plate Institute (www.tpinst.org) and **BCSI Building Component Safety Information** available from the Structural Building Component Association (www.sbcscomponents.com)

MiTek®
16023 Swingley Ridge Rd
Chesterfield, MO 63017
314.434.1200 / MiTek-US.com

RELEASE FOR CONSTRUCTION
AS NOTED ON PLANS REVIEW
DEVELOPMENT SERVICES
LEE'S SUMMIT, MISSOURI
08/15/2025 5:17:49

Job	Truss	Truss Type	Qty	Ply	Roof - HM Lot 196
P250555-01	CG3	Diagonal Hip Girder	2	1	I74462350 Job Reference (optional)

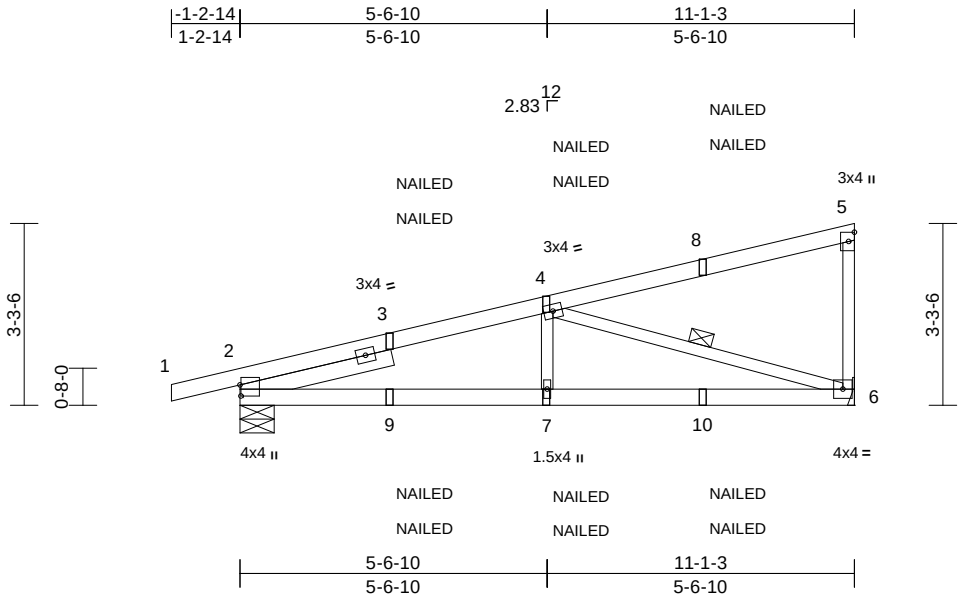

Scale = 1:41.6

Plate Offsets (X, Y): [2:0-2-6,0-0-3]

Loading	(psf)	Spacing	2-0-0	CSI		DEFL	in	(loc)	l/defl	L/d	PLATES	GRIP
TCLL (roof)	25.0	Plate Grip DOL	1.15	TC	0.54	Vert(LL)	-0.06	6-7	>999	240	MT20	197/144
TCDL	10.0	Lumber DOL	1.15	BC	0.76	Vert(CT)	-0.14	6-7	>972	180		
BCLL	0.0	Rep Stress Incr	NO	WB	0.43	Horz(CT)	0.02	6	n/a	n/a		
BCDL	10.0	Code	IRC2018/TPI2014	Matrix-S							Weight: 47 lb	FT = 20%

LUMBER
TOP CHORD 2x4 SP 2400F 2.0E
BOT CHORD 2x4 SP No.2
WEBS 2x3 SPF No.2
SLIDER Left 2x4 SP No.2 -- 2-9-12

BRACING
TOP CHORD Structural wood sheathing directly applied or 6-0-0 oc purlins, except end verticals.
BOT CHORD Rigid ceiling directly applied or 7-5-14 oc bracing.
WEBS 1 Row at midpt 4-6

REACTIONS (size) 2=0-7-6, 6= Mechanical
Max Horiz 2=134 (LC 28)
Max Uplift 2=-205 (LC 8), 6=-209 (LC 12)
Max Grav 2=684 (LC 1), 6=722 (LC 1)

FORCES (lb) - Maximum Compression/Maximum Tension
TOP CHORD 1-2=-6/0, 2-4=-1362/503, 4-5=-128/72, 5-6=-260/176
BOT CHORD 2-7=-593/1265, 6-7=-593/1265
WEBS 4-7=0/355, 4-6=-1281/570

NOTES
1) Wind: ASCE 7-16; Vult=115mph (3-second gust) Vasd=91mph; TCDL=6.0psf; BCDL=6.0psf; h=35ft; Ke=1.00; Cat. II; Exp C; Enclosed; MWFRS (envelope) exterior zone and C-C Corner (3) -1-2-14 to 5-6-10, Exterior(2R) 5-6-10 to 10-11-15 zone; cantilever left and right exposed ; end vertical left and right exposed;C-C for members and forces & MWFRS for reactions shown; Lumber DOL=1.60 plate grip DOL=1.60
2) This truss has been designed for a 10.0 psf bottom chord live load nonconcurrent with any other live loads.
3) Bearings are assumed to be: Joint 2 SP No.2 crushing capacity of 565 psi.
4) Refer to girder(s) for truss to truss connections.
5) Provide mechanical connection (by others) of truss to bearing plate capable of withstanding 209 lb uplift at joint 6 and 205 lb uplift at joint 2.
6) This truss is designed in accordance with the 2018 International Residential Code sections R502.11.1 and R802.10.2 and referenced standard ANSI/TPI 1.
7) "NAILED" indicates Girder: 3-10d (0.148" x 3") toe-nails per NDS guidelines.
8) In the LOAD CASE(S) section, loads applied to the face of the truss are noted as front (F) or back (B).

LOAD CASE(S) Standard
1) Dead + Roof Live (balanced): Lumber Increase=1.15, Plate Increase=1.15
Uniform Loads (lb/ft)
Vert: 1-5=-70, 2-6=-20
Concentrated Loads (lb)
Vert: 4=-53 (F=-26, B=-26), 7=-19 (F=-10, B=-10), 8=-198 (F=-99, B=-99), 10=-59 (F=-30, B=-30)

June 26,2025

WARNING - Verify design parameters and READ NOTES ON THIS AND INCLUDED MITEK REFERENCE PAGE MII-7473 rev. 1/2/2023 BEFORE USE.
Design valid for use only with MiTek® connectors. This design is based only upon parameters shown, and is for an individual building component, not a truss system. Before use, the building designer must verify the applicability of design parameters and properly incorporate this design into the overall building design. Bracing indicated is to prevent buckling of individual truss web and/or chord members only. Additional temporary and permanent bracing is always required for stability and to prevent collapse with possible personal injury and property damage. For general guidance regarding the fabrication, storage, delivery, erection and bracing of trusses and truss systems, see **ANSI/TPI1 Quality Criteria, and DSB-22** available from Truss Plate Institute (www.tpinst.org) and **BCSI Building Component Safety Information** available from the Structural Building Component Association (www.sbcscomponents.com)

MiTek®
16023 Swingley Ridge Rd
Chesterfield, MO 63017
314.434.1200 / MiTek-US.com

RELEASE FOR CONSTRUCTION
AS NOTED ON PLANS REVIEW
DEVELOPMENT SERVICES
LEE'S SUMMIT, MISSOURI
08/15/2025 5:17:49

Job	Truss	Truss Type	Qty	Ply	Roof - HM Lot 196
P250555-01	D1	Hip Girder	1	2	I74462351 Job Reference (optional)

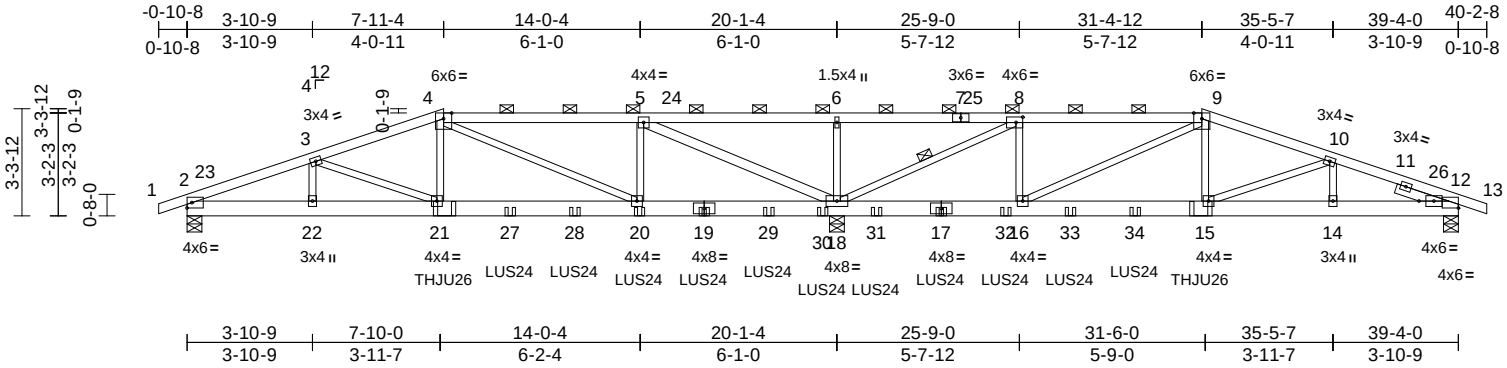

Scale = 1:71.3

Plate Offsets (X, Y): [8:0-2-8,0-2-0], [12:0-2-9,0-2-0], [12:Edge,0-2-10]

Loading	(psf)	Spacing	2-0-0	CSI		DEFL	in	(loc)	l/defl	L/d	PLATES	GRIP
TCLL (roof)	25.0	Plate Grip DOL	1.15	TC	0.65	Vert(LL)	-0.10	20-21	>999	240	MT20	197/144
TCDL	10.0	Lumber DOL	1.15	BC	0.70	Vert(CT)	-0.17	20-21	>999	180		
BCLL	0.0	Rep Stress Incr	NO	WB	0.91	Horz(CT)	0.06	12	n/a	n/a		
BCDL	10.0	Code	IRC2018/TPI2014	Matrix-S							Weight: 358 lb	FT = 20%

LUMBER

TOP CHORD 2x4 SP No.2
BOT CHORD 2x6 SPF No.2
WEBS 2x3 SPF No.2 *Except* 5-18:2x4 SP No.2
SLIDER Right 2x4 SP No.2 -- 1-8-2

BRACING

TOP CHORD Structural wood sheathing directly applied or 6-0-0 oc purlins, except 2-0-0 oc purlins (6-0-0 max.): 4-9.
BOT CHORD Rigid ceiling directly applied or 10-0-0 oc bracing.
WEBS 1 Row at midpt 8-18

REACTIONS (size) 2=0-5-8, 12=0-5-8, 18=0-5-8
Max Horiz 2=-54 (LC 17)
Max Uplift 2=-486 (LC 8), 12=-450 (LC 9), 18=-1665 (LC 8)
Max Grav 2=1707 (LC 25), 12=1572 (LC 26), 18=6064 (LC 1)

FORCES (lb) - Maximum Compression/Maximum Tension
TOP CHORD 1-2=0/1, 2-3=-3592/1031, 3-4=-3773/1134, 4-5=-2203/694, 5-6=-698/2553, 6-8=-698/2553, 8-9=-1711/557, 9-10=-3365/1019, 10-12=-3116/902, 12-13=0/1
BOT CHORD 2-22=-907/3251, 21-22=-907/3251, 20-21=-946/3505, 18-20=-565/2200, 16-18=-418/1709, 15-16=-840/3135, 14-15=-784/2836, 12-14=-784/2836
WEBS 4-21=-380/1428, 9-15=-372/1392, 6-18=-445/192, 9-16=-1631/514, 8-16=-420/1684, 8-18=-4688/1395, 5-18=-5169/1531, 4-20=-1472/471, 5-20=-419/1709, 3-21=-249/537, 10-15=-233/561, 10-14=-199/119, 3-22=-109/96

NOTES

1) 2-ply truss to be connected together with 10d (0.131"x3") nails as follows:
Top chords connected as follows: 2x4 - 1 row at 0-9-0 oc.
Bottom chords connected as follows: 2x6 - 2 rows staggered at 0-7-0 oc.
Web connected as follows: 2x3 - 1 row at 0-9-0 oc, 2x4 - 1 row at 0-9-0 oc.
2) All loads are considered equally applied to all plies, except if noted as front (F) or back (B) face in the LOAD CASE(S) section. Ply to ply connections have been provided to distribute only loads noted as (F) or (B), unless otherwise indicated.
3) Unbalanced roof live loads have been considered for this design.
4) Wind: ASCE 7-16; Vult=115mph (3-second gust) Vasd=91mph; TCDL=6.0psf; BCDL=6.0psf; h=35ft; Ke=1.00; Cat. II; Exp C; Enclosed; MWFRS (envelope) exterior zone and C-C Exterior(2E) -0-10-8 to 3-10-9, Interior (1) 3-10-9 to 7-11-4, Exterior(2R) 7-11-4 to 15-0-2, Interior (1) 15-0-2 to 31-4-12, Exterior(2R) 31-4-12 to 38-5-10, Interior (1) 38-5-10 to 40-2-8 zone; cantilever left and right exposed ; end vertical left and right exposed;C-C for members and forces & MWFRS for reactions shown; Lumber DOL=1.60 plate grip DOL=1.60
5) Provide adequate drainage to prevent water ponding.
6) This truss has been designed for a 10.0 psf bottom chord live load nonconcurrent with any other live loads.
7) All bearings are assumed to be SPF No.2 crushing capacity of 425 psi.
8) Provide mechanical connection (by others) of truss to bearing plate capable of withstanding 486 lb uplift at joint 2, 450 lb uplift at joint 12 and 1665 lb uplift at joint 18.
9) This truss is designed in accordance with the 2018 International Residential Code sections R502.11.1 and R802.10.2 and referenced standard ANSI/TPI 1.
10) Graphical purlin representation does not depict the size or the orientation of the purlin along the top and/or bottom chord.
11) Use Simpson Strong-Tie THJU26 (SGL & SGL LC 2-PLY) or equivalent at 7-11-10 from the left end to connect truss(es) to front face of bottom chord.
12) Use Simpson Strong-Tie LUS24 (4-10d Girder, 2-10d Truss) or equivalent spaced at 2-0-0 oc max. starting at 10-0-0 from the left end to 29-4-0 to connect truss(es) to front face of bottom chord.
13) Use Simpson Strong-Tie THJU26 (SGL & SGL RC 2-PLY) or equivalent at 31-4-6 from the left end to connect truss(es) to front face of bottom chord.
14) Fill all nail holes where hanger is in contact with lumber.

LOAD CASE(S) Standard
1) Dead + Roof Live (balanced): Lumber Increase=1.15, Plate Increase=1.15
Uniform Loads (lb/ft)
Vert: 1-4=-70, 4-9=-70, 9-13=-70, 2-12=-20
Concentrated Loads (lb)

June 26,2025

Continued on page 2

WARNING - Verify design parameters and READ NOTES ON THIS AND INCLUDED MITEK REFERENCE PAGE MII-7473 rev. 1/2/2023 BEFORE USE.
Design valid for use only with MiTek® connectors. This design is based only upon parameters shown, and is for an individual building component, not a truss system. Before use, the building designer must verify the applicability of design parameters and properly incorporate this design into the overall building design. Bracing indicated is to prevent buckling of individual truss web and/or chord members only. Additional temporary and permanent bracing is always required for stability and to prevent collapse with possible personal injury and property damage. For general guidance regarding the fabrication, storage, delivery, erection and bracing of trusses and truss systems, see **ANSI/TPI1 Quality Criteria, and DSB-22** available from Truss Plate Institute (www.tpinst.org) and **BCSI Building Component Safety Information** available from the Structural Building Component Association (www.sbcscomponents.com)

MiTek®
16023 Swingley Ridge Rd
Chesterfield, MO 63017
314.434.1200 / MiTek-US.com

RELEASE FOR CONSTRUCTION
AS NOTED ON PLANS REVIEW
DEVELOPMENT SERVICES
LEE'S SUMMIT, MISSOURI
08/15/2025 5:17:49

Vert: 19=-329 (F), 21=-1023 (F), 15=-1023 (F), 17=-329 (F), 20=-329 (F), 27=-329 (F), 28=-329 (F), 29=-329 (F), 30=-329 (F), 31=-329 (F), 32=-329 (F), 33=-329 (F), 34=-329 (F)

WARNING - Verify design parameters and READ NOTES ON THIS AND INCLUDED MITEK REFERENCE PAGE MII-7473 rev. 1/2/2023 BEFORE USE.
Design valid for use only with MiTek® connectors. This design is based only upon parameters shown, and is for an individual building component, not a truss system. Before use, the building designer must verify the applicability of design parameters and properly incorporate this design into the overall building design. Bracing indicated is to prevent buckling of individual truss web and/or chord members only. Additional temporary and permanent bracing is always required for stability and to prevent collapse with possible personal injury and property damage. For general guidance regarding the fabrication, storage, delivery, erection and bracing of trusses and truss systems, see **ANSI/TPI1 Quality Criteria, and DSB-22** available from Truss Plate Institute (www.tpinst.org) and **BCSI Building Component Safety Information** available from the Structural Building Component Association (www.sbcscomponents.com)

MiTek®
16023 Swingley Ridge Rd
Chesterfield, MO 63017
314.434.1200 / MiTek-US.com

RELEASE FOR CONSTRUCTION
AS NOTED ON PLANS REVIEW
DEVELOPMENT SERVICES
LEE'S SUMMIT, MISSOURI
08/15/2025 5:17:49

Job	Truss	Truss Type	Qty	Ply	Roof - HM Lot 196
P250555-01	E1	Hip Girder	1	1	I74462352 Job Reference (optional)

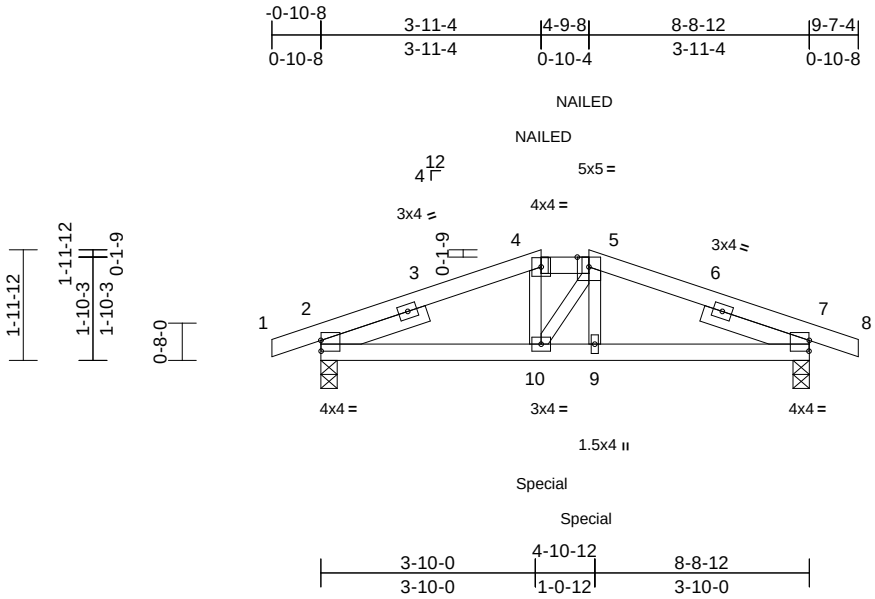

Scale = 1:41.2

Plate Offsets (X, Y): [2:0-0-1,0-2-5], [7:0-0-1,0-2-5]

Loading	(psf)	Spacing	2-0-0	CSI		DEFL	in	(loc)	l/defl	L/d	PLATES	GRIP
TCLL (roof)	25.0	Plate Grip DOL	1.15	TC	0.69	Vert(LL)	-0.03	9-10	>999	240	MT20	197/144
TCDL	10.0	Lumber DOL	1.15	BC	0.41	Vert(CT)	-0.06	9	>999	180		
BCLL	0.0	Rep Stress Incr	NO	WB	0.10	Horz(CT)	0.02	7	n/a	n/a		
BCDL	10.0	Code	IRC2018/TPI2014	Matrix-P							Weight: 39 lb	FT = 20%

LUMBER

TOP CHORD 2x4 SP No.2
BOT CHORD 2x4 SP No.2
WEBS 2x3 SPF No.2
SLIDER Left 2x4 SP No.2 -- 1-11-13, Right 2x4 SP No.2 -- 1-11-13

BRACING

TOP CHORD Structural wood sheathing directly applied or 4-1-3 oc purlins, except 2-0-0 oc purlins (5-5-14 max.): 4-5.
BOT CHORD Rigid ceiling directly applied or 9-3-0 oc bracing.

REACTIONS (size) 2=0-3-8, 7=0-3-8
Max Horiz 2=29 (LC 12)
Max Uplift 2=-220 (LC 8), 7=-220 (LC 9)
Max Grav 2=733 (LC 1), 7=733 (LC 1)

FORCES (lb) - Maximum Compression/Maximum Tension
TOP CHORD 1-2=-5/0, 2-4=-1334/530, 4-5=-1171/535, 5-7=-1329/530, 7-8=-5/0
BOT CHORD 2-10=-407/1188, 9-10=-406/1168, 7-9=-408/1185
WEBS 4-10=-40/302, 5-10=-42/53, 5-9=-28/270

NOTES

1) Unbalanced roof live loads have been considered for this design.
2) Wind: ASCE 7-16; Vult=115mph (3-second gust) Vasd=91mph; TCDL=6.0psf; BCDL=6.0psf; h=35ft; Ke=1.00; Cat. II; Exp C; Enclosed; MWFRS (envelope) exterior zone and C-C Exterior(2E) zone; cantilever left and right exposed ; end vertical left and right exposed;C-C for members and forces & MWFRS for reactions shown; Lumber DOL=1.60 plate grip DOL=1.60
3) Provide adequate drainage to prevent water ponding.
4) This truss has been designed for a 10.0 psf bottom chord live load nonconcurrent with any other live loads.
5) All bearings are assumed to be SP No.2 crushing capacity of 565 psi.
6) Provide mechanical connection (by others) of truss to bearing plate capable of withstanding 220 lb uplift at joint 2 and 220 lb uplift at joint 7.
7) This truss is designed in accordance with the 2018 International Residential Code sections R502.11.1 and R802.10.2 and referenced standard ANSI/TPI 1.
8) Graphical purlin representation does not depict the size or the orientation of the purlin along the top and/or bottom chord.
9) "NAILED" indicates Girder: 3-10d (0.148" x 3") toe-nails per NDS guidelines.
10) Hanger(s) or other connection device(s) shall be provided sufficient to support concentrated load(s) 221 lb down and 60 lb up at 3-11-4, and 221 lb down and 60 lb up at 4-8-12 on bottom chord. The design/selection of such connection device(s) is the responsibility of others.
11) In the LOAD CASE(S) section, loads applied to the face of the truss are noted as front (F) or back (B).

LOAD CASE(S) Standard

1) Dead + Roof Live (balanced): Lumber Increase=1.15, Plate Increase=1.15
Uniform Loads (lb/ft)
Vert: 1-4=-70, 4-5=-70, 5-8=-70, 2-7=-20
Concentrated Loads (lb)
Vert: 4=-59 (F), 5=-59 (F), 10=-221 (F), 9=-221 (F)

June 26,2025

WARNING - Verify design parameters and READ NOTES ON THIS AND INCLUDED MITEK REFERENCE PAGE MII-7473 rev. 1/2/2023 BEFORE USE.
Design valid for use only with MiTek® connectors. This design is based only upon parameters shown, and is for an individual building component, not a truss system. Before use, the building designer must verify the applicability of design parameters and properly incorporate this design into the overall building design. Bracing indicated is to prevent buckling of individual truss web and/or chord members only. Additional temporary and permanent bracing is always required for stability and to prevent collapse with possible personal injury and property damage. For general guidance regarding the fabrication, storage, delivery, erection and bracing of trusses and truss systems, see **ANSI/TPI1 Quality Criteria, and DSB-22** available from Truss Plate Institute (www.tpinst.org) and **BCSI Building Component Safety Information** available from the Structural Building Component Association (www.sbcscomponents.com)

MiTek®
16023 Swingley Ridge Rd
Chesterfield, MO 63017
314.434.1200 / MiTek-US.com

RELEASE FOR CONSTRUCTION
AS NOTED ON PLANS REVIEW
DEVELOPMENT SERVICES
LEE'S SUMMIT, MISSOURI
08/15/2025 5:17:50

Job	Truss	Truss Type	Qty	Ply	Roof - HM Lot 196
P250555-01	E2	Common	1	1	Job Reference (optional) I74462353

Premier Building Supply (Springhill, KS), Spring Hills, KS - 66083, Run: 8.63 S Sep 26 2024 Print: 8.630 S Sep 26 2024 MiTek Industries, Inc. Wed Jun 25 09:29:34 Page: 1
ID:Dgu00kllKKflbcSRl41v?AzXS?3-RfC?PsB70Hq3NSgPqnL8w3uITXbGKWrCDoi7J4zJC?f

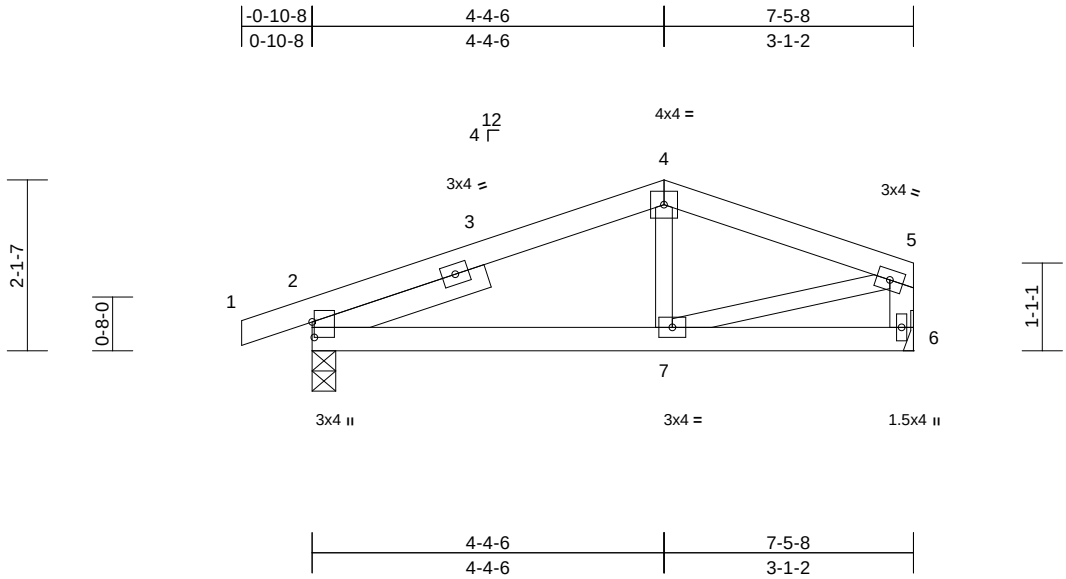

Scale = 1:28.6

Plate Offsets (X, Y): [2:0-2-5,0-0-5]

Loading	(psf)	Spacing	2-0-0	CSI		DEFL	in	(loc)	l/defl	L/d	PLATES	GRIP
TCLL (roof)	25.0	Plate Grip DOL	1.15	TC	0.39	Vert(LL)	-0.01	2-7	>999	240	MT20	197/144
TCDL	10.0	Lumber DOL	1.15	BC	0.21	Vert(CT)	-0.03	2-7	>999	180		
BCLL	0.0	Rep Stress Incr	YES	WB	0.12	Horz(CT)	0.00	6	n/a	n/a		
BCDL	10.0	Code	IRC2018/TPI2014	Matrix-P							Weight: 32 lb	FT = 20%

LUMBER
TOP CHORD 2x4 SP No.2
BOT CHORD 2x4 SP No.2
WEBS 2x3 SPF No.2 *Except* 6-5:2x4 SP No.2
SLIDER Left 2x4 SP No.2 -- 2-3-3

BRACING
TOP CHORD Structural wood sheathing directly applied or 6-0-0 oc purlins, except end verticals.
BOT CHORD Rigid ceiling directly applied or 10-0-0 oc bracing.

REACTIONS (size) 2=0-3-8, 6= Mechanical
Max Horiz 2=34 (LC 12)
Max Uplift 2=-103 (LC 8), 6=-53 (LC 9)
Max Grav 2=394 (LC 1), 6=325 (LC 1)

FORCES (lb) - Maximum Compression/Maximum Tension
TOP CHORD 1-2=-5/0, 2-4=-429/254, 4-5=-374/275, 5-6=-307/263
BOT CHORD 2-7=-238/330, 6-7=-17/19
WEBS 4-7=-2/118, 5-7=-235/343

NOTES
1) Unbalanced roof live loads have been considered for this design.
2) Wind: ASCE 7-16; Vult=115mph (3-second gust) Vasd=91mph; TCDL=6.0psf; BCDL=6.0psf; h=35ft; Ke=1.00; Cat. II; Exp C; Enclosed; MWFRS (envelope) exterior zone and C-C Exterior(2E) zone; cantilever left and right exposed ; end vertical left and right exposed;C-C for members and forces & MWFRS for reactions shown; Lumber DOL=1.60 plate grip DOL=1.60
3) This truss has been designed for a 10.0 psf bottom chord live load nonconcurrent with any other live loads.
4) Bearings are assumed to be: Joint 2 SP No.2 crushing capacity of 565 psi.
5) Refer to girder(s) for truss to truss connections.
6) Provide mechanical connection (by others) of truss to bearing plate capable of withstanding 103 lb uplift at joint 2 and 53 lb uplift at joint 6.
7) This truss is designed in accordance with the 2018 International Residential Code sections R502.11.1 and R802.10.2 and referenced standard ANSI/TPI 1.

LOAD CASE(S) Standard

June 26,2025

WARNING - Verify design parameters and READ NOTES ON THIS AND INCLUDED MITEK REFERENCE PAGE MII-7473 rev. 1/2/2023 BEFORE USE.
Design valid for use only with MiTek® connectors. This design is based only upon parameters shown, and is for an individual building component, not a truss system. Before use, the building designer must verify the applicability of design parameters and properly incorporate this design into the overall building design. Bracing indicated is to prevent buckling of individual truss web and/or chord members only. Additional temporary and permanent bracing is always required for stability and to prevent collapse with possible personal injury and property damage. For general guidance regarding the fabrication, storage, delivery, erection and bracing of trusses and truss systems, see **ANSI/TPI1 Quality Criteria, and DSB-22** available from Truss Plate Institute (www.tpinst.org) and **BCSI Building Component Safety Information** available from the Structural Building Component Association (www.sbcscomponents.com)

MiTek®
16023 Swingley Ridge Rd
Chesterfield, MO 63017
314.434.1200 / MiTek-US.com

RELEASE FOR CONSTRUCTION
AS NOTED ON PLANS REVIEW
DEVELOPMENT SERVICES
LEE'S SUMMIT, MISSOURI
08/15/2025 5:17:50

Job	Truss	Truss Type	Qty	Ply	Roof - HM Lot 196
P250555-01	J1	Jack-Closed	13	1	I74462354 Job Reference (optional)

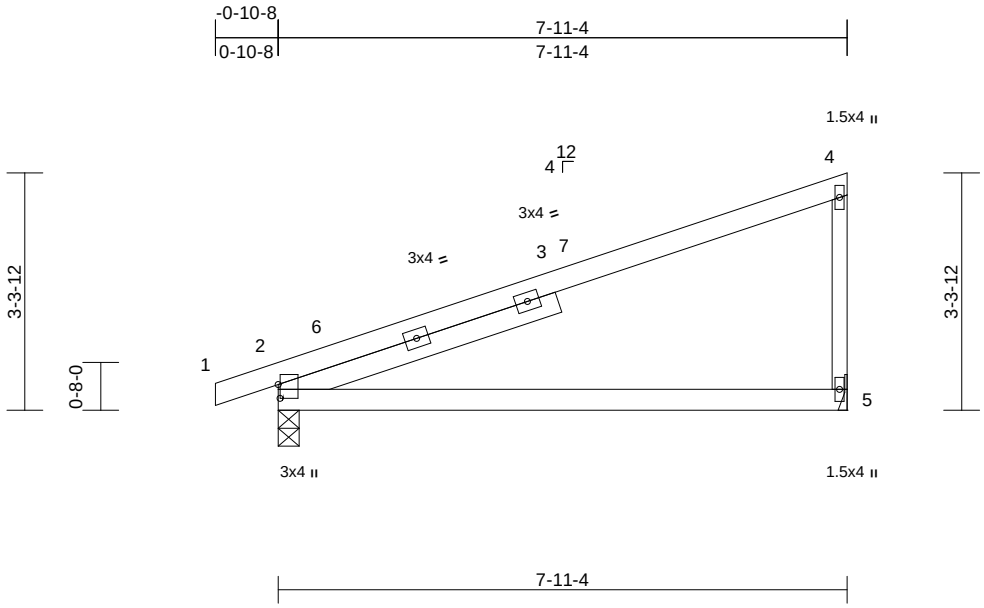

Scale = 1:32.1

Plate Offsets (X, Y): [2:0-2-5,0-0-5]

Loading	(psf)	Spacing	2-0-0	CSI		DEFL	in	(loc)	l/defl	L/d	PLATES	GRIP
TCLL (roof)	25.0	Plate Grip DOL	1.15	TC	0.68	Vert(LL)	-0.23	2-5	>416	240	MT20	197/144
TCDL	10.0	Lumber DOL	1.15	BC	0.82	Vert(CT)	-0.45	2-5	>208	180		
BCLL	0.0	Rep Stress Incr	YES	WB	0.00	Horz(CT)	0.00	5	n/a	n/a		
BCDL	10.0	Code	IRC2018/TPI2014	Matrix-P							Weight: 34 lb	FT = 20%

LUMBER
TOP CHORD 2x4 SP 2400F 2.0E
BOT CHORD 2x4 SP No.2
WEBS 2x3 SPF No.2
SLIDER Left 2x4 SP No.2 -- 4-1-2

BRACING
TOP CHORD Structural wood sheathing directly applied or 6-0-0 oc purlins, except end verticals.
BOT CHORD Rigid ceiling directly applied or 9-10-2 oc bracing.

REACTIONS (size) 2=0-3-8, 5= Mechanical
Max Horiz 2=140 (LC 9)
Max Uplift 2=-108 (LC 8), 5=-88 (LC 12)
Max Grav 2=417 (LC 1), 5=349 (LC 1)

FORCES (lb) - Maximum Compression/Maximum Tension
TOP CHORD 1-2=-5/0, 2-4=-173/108, 4-5=-271/327
BOT CHORD 2-5=-61/67

NOTES
1) Wind: ASCE 7-16; Vult=115mph (3-second gust) Vasd=91mph; TCDL=6.0psf; BCDL=6.0psf; h=35ft; Ke=1.00; Cat. II; Exp C; Enclosed; MWFRS (envelope) exterior zone and C-C Exterior(2E) -0-10-8 to 4-1-8, Interior (1) 4-1-8 to 7-10-0 zone; cantilever left and right exposed ; end vertical left and right exposed;C-C for members and forces & MWFRS for reactions shown; Lumber DOL=1.60 plate grip DOL=1.60
2) This truss has been designed for a 10.0 psf bottom chord live load nonconcurrent with any other live loads.
3) Bearings are assumed to be: Joint 2 SP No.2 crushing capacity of 565 psi.
4) Refer to girder(s) for truss to truss connections.
5) Provide mechanical connection (by others) of truss to bearing plate capable of withstanding 88 lb uplift at joint 5 and 108 lb uplift at joint 2.
6) This truss is designed in accordance with the 2018 International Residential Code sections R502.11.1 and R802.10.2 and referenced standard ANSI/TPI 1.

LOAD CASE(S) Standard

STATE OF MISSOURI
JIE LU
NUMBER
PE-029327
PROFESSIONAL ENGINEER

June 26,2025

WARNING - Verify design parameters and READ NOTES ON THIS AND INCLUDED MITEK REFERENCE PAGE MII-7473 rev. 1/2/2023 BEFORE USE.
Design valid for use only with MiTek® connectors. This design is based only upon parameters shown, and is for an individual building component, not a truss system. Before use, the building designer must verify the applicability of design parameters and properly incorporate this design into the overall building design. Bracing indicated is to prevent buckling of individual truss web and/or chord members only. Additional temporary and permanent bracing is always required for stability and to prevent collapse with possible personal injury and property damage. For general guidance regarding the fabrication, storage, delivery, erection and bracing of trusses and truss systems, see **ANSI/TPI1 Quality Criteria, and DSB-22** available from Truss Plate Institute (www.tpinst.org) and **BCSI Building Component Safety Information** available from the Structural Building Component Association (www.sbcscomponents.com)

MiTek®
16023 Swingley Ridge Rd
Chesterfield, MO 63017
314.434.1200 / MiTek-US.com

RELEASE FOR CONSTRUCTION
AS NOTED ON PLANS REVIEW
DEVELOPMENT SERVICES
LEE'S SUMMIT, MISSOURI
08/15/2025 5:17:50

Job	Truss	Truss Type	Qty	Ply	Roof - HM Lot 196
P250555-01	J2	Jack-Open	4	1	I74462355 Job Reference (optional)

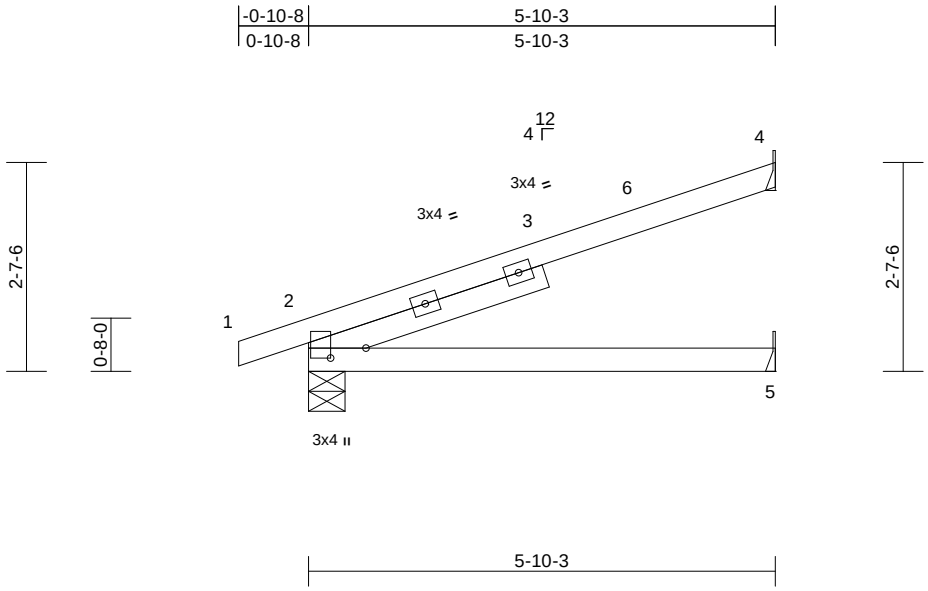

Scale = 1:28.9

Plate Offsets (X, Y): [2:0-1-8,0-5-5]

Loading	(psf)	Spacing	2-0-0	CSI		DEFL	in	(loc)	l/defl	L/d	PLATES	GRIP
TCLL (roof)	25.0	Plate Grip DOL	1.15	TC	0.76	Vert(LL)	-0.07	2-5	>999	240	MT20	244/190
TCDL	10.0	Lumber DOL	1.15	BC	0.43	Vert(CT)	-0.13	2-5	>516	180		
BCLL	0.0	Rep Stress Incr	YES	WB	0.00	Horz(CT)	-0.02	4	n/a	n/a		
BCDL	10.0	Code	IRC2018/TPI2014	Matrix-P							Weight: 24 lb	FT = 20%

LUMBER
TOP CHORD 2x4 SP No.2
BOT CHORD 2x4 SP No.2
SLIDER Left 2x4 SP No.2 -- 3-1-4

BRACING
TOP CHORD Structural wood sheathing directly applied or 5-10-3 oc purlins.
BOT CHORD Rigid ceiling directly applied or 10-0-0 oc bracing.

REACTIONS (size) 2=0-5-8, 4= Mechanical, 5= Mechanical
Max Horiz 2=97 (LC 12)
Max Uplift 2=-80 (LC 8), 4=-110 (LC 12)
Max Grav 2=326 (LC 1), 4=198 (LC 1), 5=116 (LC 3)

FORCES (lb) - Maximum Compression/Maximum Tension
TOP CHORD 1-2=-5/0, 2-4=-104/49
BOT CHORD 2-5=0/0

NOTES
1) Wind: ASCE 7-16; Vult=115mph (3-second gust) Vasd=91mph; TCDL=6.0psf; BCDL=6.0psf; h=35ft; Ke=1.00; Cat. II; Exp C; Enclosed; MWFRS (envelope) exterior zone and C-C Exterior(2E) -0-10-8 to 4-1-8, Interior (1) 4-1-8 to 5-9-7 zone; cantilever left and right exposed ; end vertical left and right exposed;C-C for members and forces & MWFRS for reactions shown; Lumber DOL=1.60 plate grip DOL=1.60
2) This truss has been designed for a 10.0 psf bottom chord live load nonconcurrent with any other live loads.
3) Bearings are assumed to be: , Joint 2 SP No.2 crushing capacity of 565 psi.
4) Refer to girder(s) for truss to truss connections.
5) Provide mechanical connection (by others) of truss to bearing plate capable of withstanding 110 lb uplift at joint 4 and 80 lb uplift at joint 2.
6) This truss is designed in accordance with the 2018 International Residential Code sections R502.11.1 and R802.10.2 and referenced standard ANSI/TPI 1.

LOAD CASE(S) Standard

June 26,2025

WARNING - Verify design parameters and READ NOTES ON THIS AND INCLUDED MITEK REFERENCE PAGE MII-7473 rev. 1/2/2023 BEFORE USE.
Design valid for use only with MiTek® connectors. This design is based only upon parameters shown, and is for an individual building component, not a truss system. Before use, the building designer must verify the applicability of design parameters and properly incorporate this design into the overall building design. Bracing indicated is to prevent buckling of individual truss web and/or chord members only. Additional temporary and permanent bracing is always required for stability and to prevent collapse with possible personal injury and property damage. For general guidance regarding the fabrication, storage, delivery, erection and bracing of trusses and truss systems, see **ANSI/TPI1 Quality Criteria, and DSB-22** available from Truss Plate Institute (www.tpinst.org) and **BCSI Building Component Safety Information** available from the Structural Building Component Association (www.sbcscomponents.com)

MiTek®
16023 Swingley Ridge Rd
Chesterfield, MO 63017
314.434.1200 / MiTek-US.com

RELEASE FOR CONSTRUCTION
AS NOTED ON PLANS REVIEW
DEVELOPMENT SERVICES
LEE'S SUMMIT, MISSOURI
08/15/2025 5:17:50

Job	Truss	Truss Type	Qty	Ply	Roof - HM Lot 196
P250555-01	J3	Jack-Open	15	1	I74462356 Job Reference (optional)

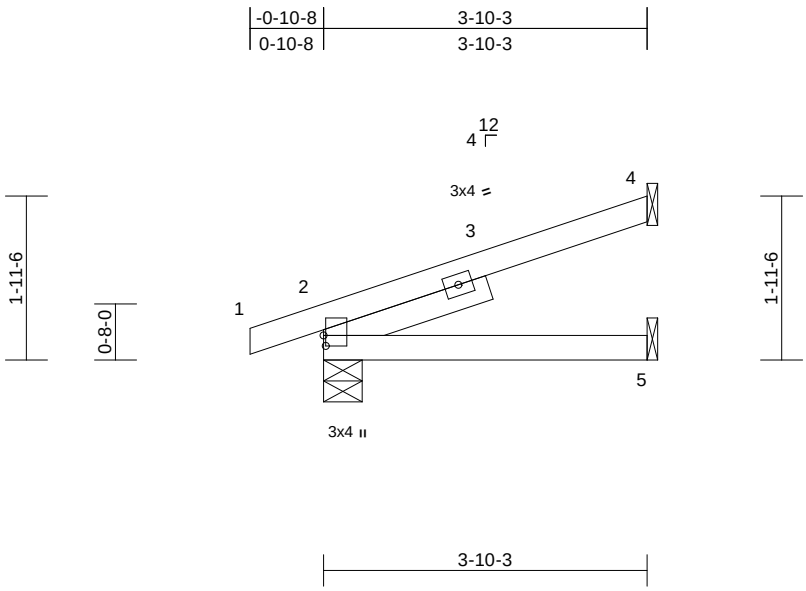

Scale = 1:27.4

Plate Offsets (X, Y): [2:0-1-8,0-0-5]

Loading	(psf)	Spacing	2-0-0	CSI		DEFL	in	(loc)	l/defl	L/d	PLATES	GRIP
TCLL (roof)	25.0	Plate Grip DOL	1.15	TC	0.32	Vert(LL)	-0.01	2-5	>999	240	MT20	244/190
TCDL	10.0	Lumber DOL	1.15	BC	0.17	Vert(CT)	-0.02	2-5	>999	180		
BCLL	0.0	Rep Stress Incr	YES	WB	0.00	Horz(CT)	-0.01	4	n/a	n/a		
BCDL	10.0	Code	IRC2018/TPI2014	Matrix-P							Weight: 16 lb	FT = 20%

LUMBER
TOP CHORD 2x4 SP No.2
BOT CHORD 2x4 SP No.2
SLIDER Left 2x4 SP No.2 -- 2-0-10

BRACING
TOP CHORD Structural wood sheathing directly applied or 3-10-3 oc purlins.
BOT CHORD Rigid ceiling directly applied or 10-0-0 oc bracing.

REACTIONS (size) 2=0-5-8, 4= Mechanical, 5= Mechanical
Max Horiz 2=68 (LC 12)
Max Uplift 2=-67 (LC 8), 4=-73 (LC 12)
Max Grav 2=239 (LC 1), 4=125 (LC 1), 5=76 (LC 3)

FORCES (lb) - Maximum Compression/Maximum Tension
TOP CHORD 1-2=-5/0, 2-4=-76/31
BOT CHORD 2-5=0/0

NOTES
1) Wind: ASCE 7-16; Vult=115mph (3-second gust) Vasd=91mph; TCDL=6.0psf; BCDL=6.0psf; h=35ft; Ke=1.00; Cat. II; Exp C; Enclosed; MWFRS (envelope) exterior zone and C-C Exterior(2E) zone; cantilever left and right exposed ; end vertical left and right exposed;C-C for members and forces & MWFRS for reactions shown; Lumber DOL=1.60 plate grip DOL=1.60
2) This truss has been designed for a 10.0 psf bottom chord live load nonconcurrent with any other live loads.
3) Bearings are assumed to be: , Joint 2 SP No.2 crushing capacity of 565 psi.
4) Refer to girder(s) for truss to truss connections.
5) Provide mechanical connection (by others) of truss to bearing plate capable of withstanding 73 lb uplift at joint 4 and 67 lb uplift at joint 2.
6) This truss is designed in accordance with the 2018 International Residential Code sections R502.11.1 and R802.10.2 and referenced standard ANSI/TPI 1.

LOAD CASE(S) Standard

STATE OF MISSOURI
JIE LU
NUMBER
PE-029327
PROFESSIONAL ENGINEER

June 26,2025

WARNING - Verify design parameters and READ NOTES ON THIS AND INCLUDED MITEK REFERENCE PAGE MII-7473 rev. 1/2/2023 BEFORE USE.
Design valid for use only with MiTek® connectors. This design is based only upon parameters shown, and is for an individual building component, not a truss system. Before use, the building designer must verify the applicability of design parameters and properly incorporate this design into the overall building design. Bracing indicated is to prevent buckling of individual truss web and/or chord members only. Additional temporary and permanent bracing is always required for stability and to prevent collapse with possible personal injury and property damage. For general guidance regarding the fabrication, storage, delivery, erection and bracing of trusses and truss systems, see **ANSI/TPI1 Quality Criteria, and DSB-22** available from Truss Plate Institute (www.tpinst.org) and **BCSI Building Component Safety Information** available from the Structural Building Component Association (www.sbcscomponents.com)

MiTek®
16023 Swingley Ridge Rd
Chesterfield, MO 63017
314.434.1200 / MiTek-US.com

RELEASE FOR CONSTRUCTION
AS NOTED ON PLANS REVIEW
DEVELOPMENT SERVICES
LEE'S SUMMIT, MISSOURI
08/15/2025 5:17:50

Job	Truss	Truss Type	Qty	Ply	Roof - HM Lot 196
P250555-01	J4	Jack-Open	2	1	I74462357 Job Reference (optional)

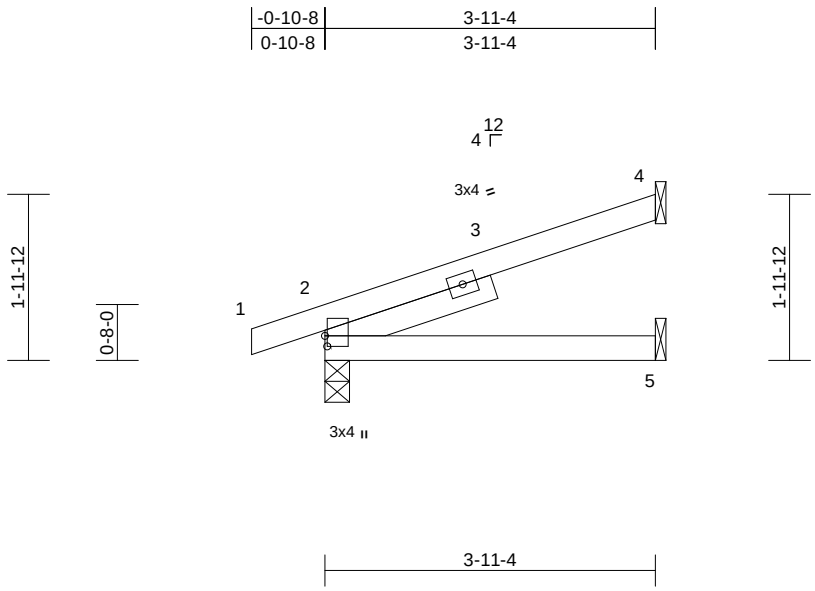

Scale = 1:27.5

Plate Offsets (X, Y): [2:0-1-8,0-0-5]

Loading	(psf)	Spacing	2-0-0	CSI		DEFL	in	(loc)	l/defl	L/d	PLATES	GRIP
TCLL (roof)	25.0	Plate Grip DOL	1.15	TC	0.34	Vert(LL)	-0.01	2-5	>999	240	MT20	244/190
TCDL	10.0	Lumber DOL	1.15	BC	0.18	Vert(CT)	-0.03	2-5	>999	180		
BCLL	0.0	Rep Stress Incr	YES	WB	0.00	Horz(CT)	-0.01	4	n/a	n/a		
BCDL	10.0	Code	IRC2018/TPI2014	Matrix-P							Weight: 17 lb	FT = 20%

LUMBER
TOP CHORD 2x4 SP No.2
BOT CHORD 2x4 SP No.2
SLIDER Left 2x4 SP No.2 -- 2-1-3

BRACING
TOP CHORD Structural wood sheathing directly applied or 3-11-4 oc purlins.
BOT CHORD Rigid ceiling directly applied or 10-0-0 oc bracing.

REACTIONS (size) 2=0-3-8, 4= Mechanical, 5= Mechanical
Max Horiz 2=70 (LC 12)
Max Uplift 2=-68 (LC 8), 4=-74 (LC 12)
Max Grav 2=243 (LC 1), 4=129 (LC 1), 5=78 (LC 3)

FORCES (lb) - Maximum Compression/Maximum Tension
TOP CHORD 1-2=-5/0, 2-4=-76/32
BOT CHORD 2-5=0/0

NOTES
1) Wind: ASCE 7-16; Vult=115mph (3-second gust) Vasd=91mph; TCDL=6.0psf; BCDL=6.0psf; h=35ft; Ke=1.00; Cat. II; Exp C; Enclosed; MWFRS (envelope) exterior zone and C-C Exterior(2E) zone; cantilever left and right exposed ; end vertical left and right exposed;C-C for members and forces & MWFRS for reactions shown; Lumber DOL=1.60 plate grip DOL=1.60
2) This truss has been designed for a 10.0 psf bottom chord live load nonconcurrent with any other live loads.
3) Bearings are assumed to be: , Joint 2 SP No.2 crushing capacity of 565 psi.
4) Refer to girder(s) for truss to truss connections.
5) Provide mechanical connection (by others) of truss to bearing plate capable of withstanding 74 lb uplift at joint 4 and 68 lb uplift at joint 2.
6) This truss is designed in accordance with the 2018 International Residential Code sections R502.11.1 and R802.10.2 and referenced standard ANSI/TPI 1.

LOAD CASE(S) Standard

June 26,2025

WARNING - Verify design parameters and READ NOTES ON THIS AND INCLUDED MITEK REFERENCE PAGE MII-7473 rev. 1/2/2023 BEFORE USE.
Design valid for use only with MiTek® connectors. This design is based only upon parameters shown, and is for an individual building component, not a truss system. Before use, the building designer must verify the applicability of design parameters and properly incorporate this design into the overall building design. Bracing indicated is to prevent buckling of individual truss web and/or chord members only. Additional temporary and permanent bracing is always required for stability and to prevent collapse with possible personal injury and property damage. For general guidance regarding the fabrication, storage, delivery, erection and bracing of trusses and truss systems, see **ANSI/TPI1 Quality Criteria, and DSB-22** available from Truss Plate Institute (www.tpinst.org) and **BCSI Building Component Safety Information** available from the Structural Building Component Association (www.sbcscomponents.com)

MiTek®
16023 Swingley Ridge Rd
Chesterfield, MO 63017
314.434.1200 / MiTek-US.com

RELEASE FOR CONSTRUCTION
AS NOTED ON PLANS REVIEW
DEVELOPMENT SERVICES
LEE'S SUMMIT, MISSOURI
08/15/2025 5:17:50

Job	Truss	Truss Type	Qty	Ply	Roof - HM Lot 196
P250555-01	J6	Jack-Open	23	1	I74462358 Job Reference (optional)

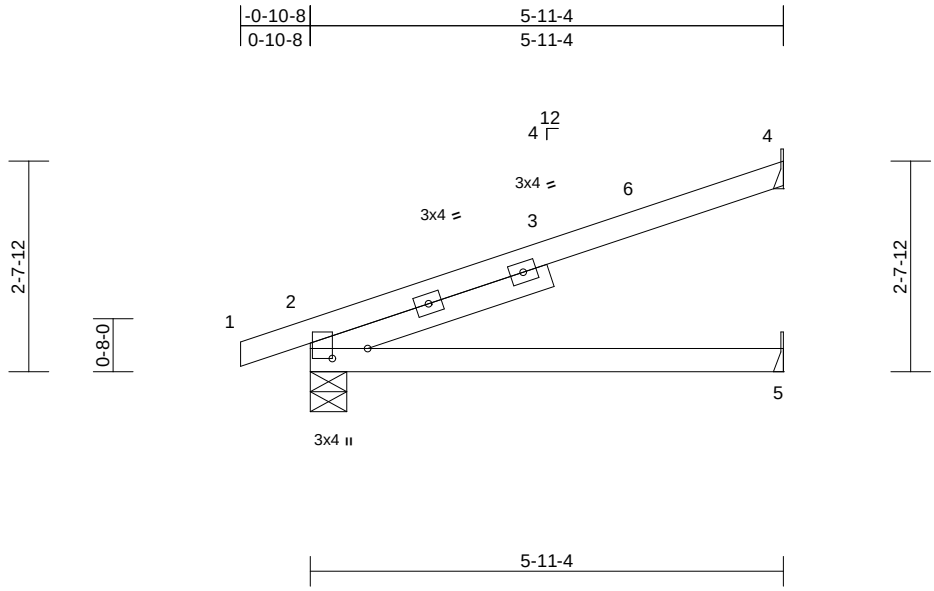

Scale = 1:28.9

Plate Offsets (X, Y): [2:0-1-8,0-5-5]

Loading	(psf)	Spacing	2-0-0	CSI		DEFL	in	(loc)	l/defl	L/d	PLATES	GRIP
TCLL (roof)	25.0	Plate Grip DOL	1.15	TC	0.78	Vert(LL)	-0.07	2-5	>987	240	MT20	244/190
TCDL	10.0	Lumber DOL	1.15	BC	0.44	Vert(CT)	-0.14	2-5	>493	180		
BCLL	0.0	Rep Stress Incr	YES	WB	0.00	Horz(CT)	-0.02	4	n/a	n/a		
BCDL	10.0	Code	IRC2018/TPI2014	Matrix-P							Weight: 24 lb	FT = 20%

LUMBER
TOP CHORD 2x4 SP No.2
BOT CHORD 2x4 SP No.2
SLIDER Left 2x4 SP No.2 -- 3-1-13

BRACING
TOP CHORD Structural wood sheathing directly applied or 5-11-4 oc purlins.
BOT CHORD Rigid ceiling directly applied or 10-0-0 oc bracing.

REACTIONS (size) 2=0-5-8, 4= Mechanical, 5= Mechanical
Max Horiz 2=99 (LC 12)
Max Uplift 2=-81 (LC 8), 4=-111 (LC 12)
Max Grav 2=330 (LC 1), 4=201 (LC 1), 5=118 (LC 3)

FORCES (lb) - Maximum Compression/Maximum Tension
TOP CHORD 1-2=-5/0, 2-4=-105/50
BOT CHORD 2-5=0/0

NOTES
1) Wind: ASCE 7-16; Vult=115mph (3-second gust) Vasd=91mph; TCDL=6.0psf; BCDL=6.0psf; h=35ft; Ke=1.00; Cat. II; Exp C; Enclosed; MWFRS (envelope) exterior zone and C-C Exterior(2E) -0-10-8 to 4-1-8, Interior (1) 4-1-8 to 5-10-8 zone; cantilever left and right exposed ; end vertical left and right exposed;C-C for members and forces & MWFRS for reactions shown; Lumber DOL=1.60 plate grip DOL=1.60
2) This truss has been designed for a 10.0 psf bottom chord live load nonconcurrent with any other live loads.
3) Bearings are assumed to be: , Joint 2 SP No.2 crushing capacity of 565 psi.
4) Refer to girder(s) for truss to truss connections.
5) Provide mechanical connection (by others) of truss to bearing plate capable of withstanding 111 lb uplift at joint 4 and 81 lb uplift at joint 2.
6) This truss is designed in accordance with the 2018 International Residential Code sections R502.11.1 and R802.10.2 and referenced standard ANSI/TPI 1.

LOAD CASE(S) Standard

STATE OF MISSOURI
JIE LU
NUMBER
PE-029327
PROFESSIONAL ENGINEER

June 26,2025

WARNING - Verify design parameters and READ NOTES ON THIS AND INCLUDED MITEK REFERENCE PAGE MII-7473 rev. 1/2/2023 BEFORE USE.
Design valid for use only with MiTek® connectors. This design is based only upon parameters shown, and is for an individual building component, not a truss system. Before use, the building designer must verify the applicability of design parameters and properly incorporate this design into the overall building design. Bracing indicated is to prevent buckling of individual truss web and/or chord members only. Additional temporary and permanent bracing is always required for stability and to prevent collapse with possible personal injury and property damage. For general guidance regarding the fabrication, storage, delivery, erection and bracing of trusses and truss systems, see **ANSI/TPI1 Quality Criteria, and DSB-22** available from Truss Plate Institute (www.tpinst.org) and **BCSI Building Component Safety Information** available from the Structural Building Component Association (www.sbcscomponents.com)

MiTek®
16023 Swingley Ridge Rd
Chesterfield, MO 63017
314.434.1200 / MiTek-US.com

RELEASE FOR CONSTRUCTION
AS NOTED ON PLANS REVIEW
DEVELOPMENT SERVICES
LEE'S SUMMIT, MISSOURI
08/15/2025 5:17:50

Job	Truss	Truss Type	Qty	Ply	Roof - HM Lot 196
P250555-01	J7	Jack-Open	20	1	I74462359 Job Reference (optional)

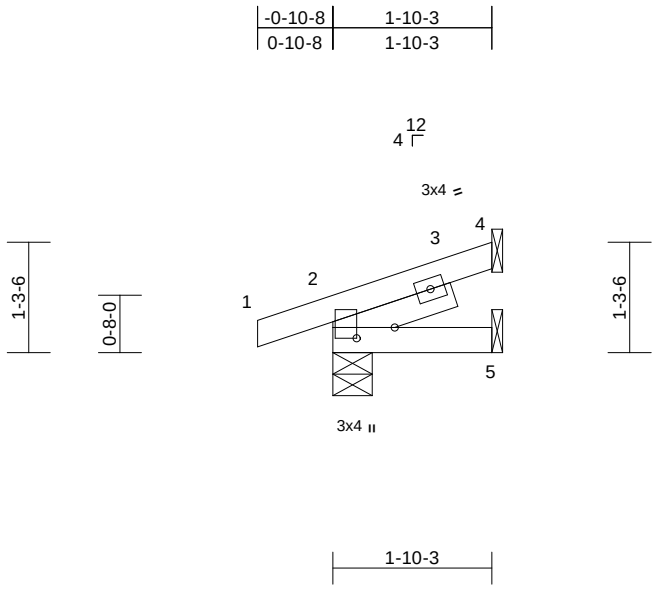

Scale = 1:26.8

Plate Offsets (X, Y): [2:0-1-8,0-5-5]

Loading	(psf)	Spacing	2-0-0	CSI		DEFL	in	(loc)	l/defl	L/d	PLATES	GRIP
TCLL (roof)	25.0	Plate Grip DOL	1.15	TC	0.06	Vert(LL)	0.00	2-5	>999	240	MT20	244/190
TCDL	10.0	Lumber DOL	1.15	BC	0.04	Vert(CT)	0.00	2-5	>999	180		
BCLL	0.0	Rep Stress Incr	YES	WB	0.00	Horz(CT)	0.00	4	n/a	n/a		
BCDL	10.0	Code	IRC2018/TPI2014	Matrix-P							Weight: 9 lb	FT = 20%

LUMBER
TOP CHORD 2x4 SP No.2
BOT CHORD 2x4 SP No.2
SLIDER Left 2x4 SP No.2 -- 1-5-8

BRACING
TOP CHORD Structural wood sheathing directly applied or 1-10-3 oc purlins.
BOT CHORD Rigid ceiling directly applied or 10-0-0 oc bracing.

REACTIONS (size) 2=0-5-8, 4= Mechanical, 5= Mechanical
Max Horiz 2=40 (LC 12)
Max Uplift 2=-57 (LC 8), 4=-35 (LC 12)
Max Grav 2=158 (LC 1), 4=50 (LC 1), 5=37 (LC 3)

FORCES (lb) - Maximum Compression/Maximum Tension
TOP CHORD 1-2=-5/0, 2-4=-43/16
BOT CHORD 2-5=0/0

NOTES
1) Wind: ASCE 7-16; Vult=115mph (3-second gust) Vasd=91mph; TCDL=6.0psf; BCDL=6.0psf; h=35ft; Ke=1.00; Cat. II; Exp C; Enclosed; MWFRS (envelope) exterior zone and C-C Exterior(2E) zone; cantilever left and right exposed ; end vertical left and right exposed;C-C for members and forces & MWFRS for reactions shown; Lumber DOL=1.60 plate grip DOL=1.60
2) This truss has been designed for a 10.0 psf bottom chord live load nonconcurrent with any other live loads.
3) Bearings are assumed to be: , Joint 2 SP No.2 crushing capacity of 565 psi.
4) Refer to girder(s) for truss to truss connections.
5) Provide mechanical connection (by others) of truss to bearing plate capable of withstanding 57 lb uplift at joint 2 and 35 lb uplift at joint 4.
6) This truss is designed in accordance with the 2018 International Residential Code sections R502.11.1 and R802.10.2 and referenced standard ANSI/TPI 1.

LOAD CASE(S) Standard

June 26,2025

WARNING - Verify design parameters and READ NOTES ON THIS AND INCLUDED MITEK REFERENCE PAGE MII-7473 rev. 1/2/2023 BEFORE USE.
Design valid for use only with MiTek® connectors. This design is based only upon parameters shown, and is for an individual building component, not a truss system. Before use, the building designer must verify the applicability of design parameters and properly incorporate this design into the overall building design. Bracing indicated is to prevent buckling of individual truss web and/or chord members only. Additional temporary and permanent bracing is always required for stability and to prevent collapse with possible personal injury and property damage. For general guidance regarding the fabrication, storage, delivery, erection and bracing of trusses and truss systems, see **ANSI/TPI1 Quality Criteria, and DSB-22** available from Truss Plate Institute (www.tpinst.org) and **BCSI Building Component Safety Information** available from the Structural Building Component Association (www.sbcscomponents.com)

MiTek®
16023 Swingley Ridge Rd
Chesterfield, MO 63017
314.434.1200 / MiTek-US.com

RELEASE FOR CONSTRUCTION
AS NOTED ON PLANS REVIEW
DEVELOPMENT SERVICES
LEE'S SUMMIT, MISSOURI
08/15/2025 5:17:50

Job	Truss	Truss Type	Qty	Ply	Roof - HM Lot 196
P250555-01	J8	Jack-Open	1	1	I74462360 Job Reference (optional)

Premier Building Supply (Springhill, KS), Spring Hills, KS - 66083, Run: 8.63 E Feb 9 2023 Print: 8.630 E Feb 9 2023 MiTek Industries, Inc. Thu Jun 26 15:59:43 Page: 1
ID:snFyH7bqKHEyBhlTgEEKEGzEAIs-m4aTxpNhhkjdbclZkCyLCDFFFmwOrAfHrL8k30z2XC?

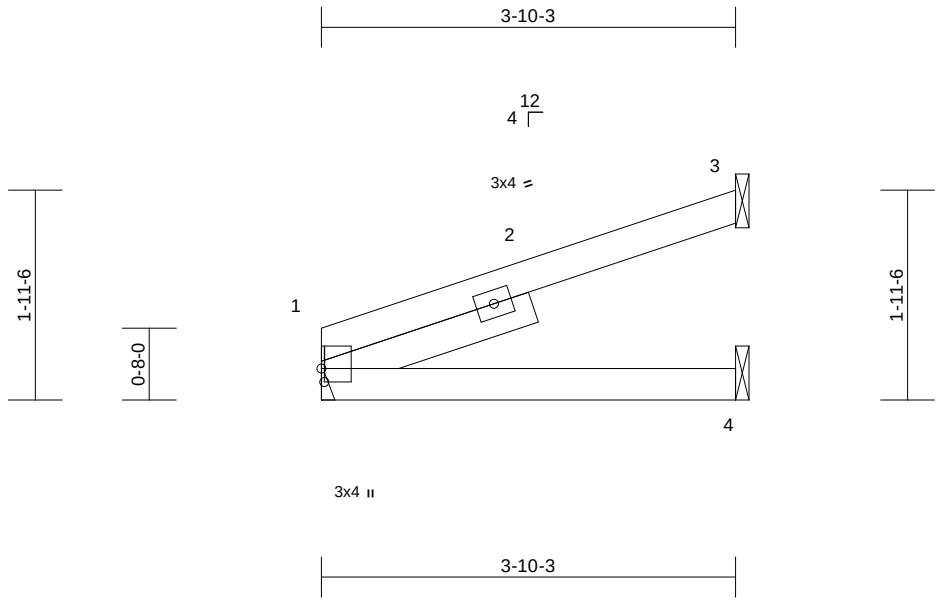

Scale = 1:21.4

Plate Offsets (X, Y): [1:0-1-8,0-0-5]

Loading	(psf)	Spacing	2-0-0	CSI		DEFL	in	(loc)	l/defl	L/d	PLATES	GRIP
TCLL (roof)	25.0	Plate Grip DOL	1.15	TC	0.36	Vert(LL)	-0.01	1-4	>999	240	MT20	244/190
TCDL	10.0	Lumber DOL	1.15	BC	0.17	Vert(CT)	-0.02	1-4	>999	180		
BCLL	0.0	Rep Stress Incr	YES	WB	0.00	Horz(CT)	-0.01	3	n/a	n/a		
BCDL	10.0	Code	IRC2018/TPI2014	Matrix-P							Weight: 15 lb	FT = 20%

LUMBER
TOP CHORD 2x4 SP No.2
BOT CHORD 2x4 SP No.2
SLIDER Left 2x4 SP No.2 -- 2-0-10

BRACING
TOP CHORD Structural wood sheathing directly applied or 3-10-3 oc purlins.
BOT CHORD Rigid ceiling directly applied or 10-0-0 oc bracing.

REACTIONS (lb/size) 1=170/ Mechanical, 3=133/ Mechanical, 4=38/ Mechanical
Max Horiz 1=71 (LC 8)
Max Uplift 1=-22 (LC 8), 3=-75 (LC 8)
Max Grav 1=170 (LC 1), 3=133 (LC 1), 4=76 (LC 3)

FORCES (lb) - Max. Comp./Max. Ten. - All forces 250 (lb) or less except when shown.

NOTES
1) Wind: ASCE 7-16; Vult=115mph (3-second gust) Vasd=91mph; TCDL=6.0psf; BCDL=6.0psf; h=35ft; Ke=1.00; Cat. II; Exp C; Enclosed; MWFRS (envelope) exterior zone and C-C Exterior(2E) zone; cantilever left and right exposed ; end vertical left and right exposed;C-C for members and forces & MWFRS for reactions shown; Lumber DOL=1.60 plate grip DOL=1.60
2) This truss has been designed for a 10.0 psf bottom chord live load nonconcurrent with any other live loads.
3) Refer to girder(s) for truss to truss connections.
4) Refer to girder(s) for truss to truss connections.
5) Provide mechanical connection (by others) of truss to bearing plate capable of withstanding 22 lb uplift at joint 1 and 75 lb uplift at joint 3.
6) This truss is designed in accordance with the 2018 International Residential Code sections R502.11.1 and R802.10.2 and referenced standard ANSI/TPI 1.

LOAD CASE(S) Standard

June 26,2025

WARNING - Verify design parameters and READ NOTES ON THIS AND INCLUDED MITEK REFERENCE PAGE MII-7473 rev. 1/2/2023 BEFORE USE.
Design valid for use only with MiTek® connectors. This design is based only upon parameters shown, and is for an individual building component, not a truss system. Before use, the building designer must verify the applicability of design parameters and properly incorporate this design into the overall building design. Bracing indicated is to prevent buckling of individual truss web and/or chord members only. Additional temporary and permanent bracing is always required for stability and to prevent collapse with possible personal injury and property damage. For general guidance regarding the fabrication, storage, delivery, erection and bracing of trusses and truss systems, see **ANSI/TPI1 Quality Criteria, and DSB-22** available from Truss Plate Institute (www.tpinst.org) and **BCSI Building Component Safety Information** available from the Structural Building Component Association (www.sbcscomponents.com)

MiTek®
16023 Swingley Ridge Rd
Chesterfield, MO 63017
314.434.1200 / MiTek-US.com

RELEASE FOR CONSTRUCTION
AS NOTED ON PLANS REVIEW
DEVELOPMENT SERVICES
LEE'S SUMMIT, MISSOURI
08/15/2025 5:17:50

Job	Truss	Truss Type	Qty	Ply	Roof - HM Lot 196
P250555-01	LG1	Lay-In Gable	1	1	I74462361 Job Reference (optional)

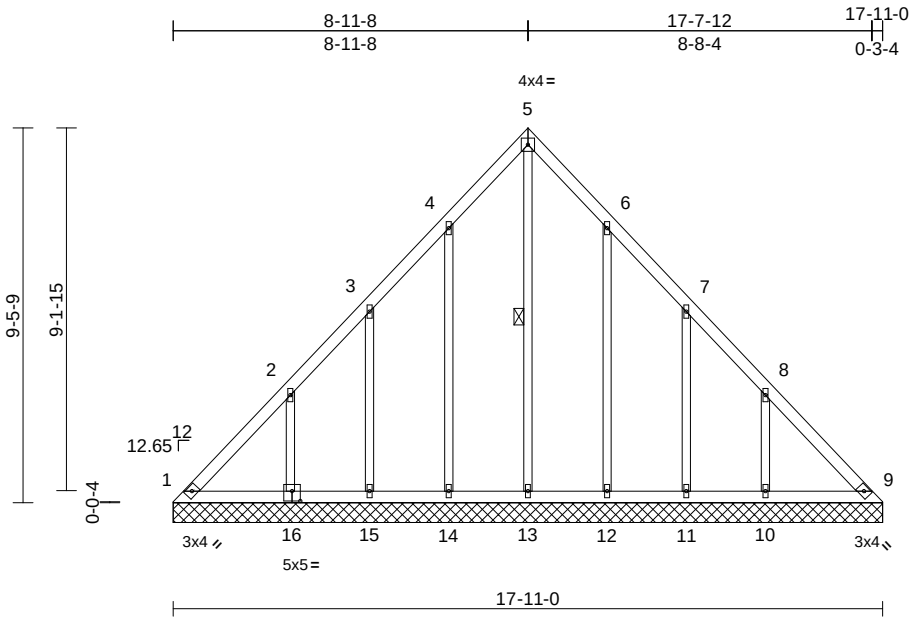

Scale = 1:58.2

Plate Offsets (X, Y): [16:0-2-8,0-3-0]

Loading	(psf)	Spacing	2-0-0	CSI		DEFL	in	(loc)	l/defl	L/d	PLATES	GRIP
TCLL (roof)	25.0	Plate Grip DOL	1.15	TC	0.12	Vert(LL)	n/a	-	n/a	999	MT20	244/190
TCDL	10.0	Lumber DOL	1.15	BC	0.07	Vert(TL)	n/a	-	n/a	999		
BCLL	0.0	Rep Stress Incr	YES	WB	0.22	Horiz(TL)	0.01	9	n/a	n/a		
BCDL	10.0	Code	IRC2018/TPI2014	Matrix-S							Weight: 94 lb	FT = 20%

LUMBER
TOP CHORD 2x4 SP No.2
BOT CHORD 2x4 SP No.2
OTHERS 2x3 SPF No.2

BRACING
TOP CHORD Structural wood sheathing directly applied or 6-0-0 oc purlins.
BOT CHORD Rigid ceiling directly applied or 10-0-0 oc bracing.
WEBS 1 Row at midpt 5-13

REACTIONS (size) 1=17-11-0, 9=17-11-0, 10=17-11-0, 11=17-11-0, 12=17-11-0, 13=17-11-0, 14=17-11-0, 15=17-11-0, 16=17-11-0
Max Horiz 1=-258 (LC 8)
Max Uplift 1=-75 (LC 10), 9=-39 (LC 11), 10=-186 (LC 13), 11=-126 (LC 13), 12=-135 (LC 13), 14=-137 (LC 12), 15=-125 (LC 12), 16=-183 (LC 12)
Max Grav 1=218 (LC 21), 9=198 (LC 22), 10=284 (LC 20), 11=182 (LC 20), 12=219 (LC 20), 13=204 (LC 13), 14=222 (LC 19), 15=179 (LC 19), 16=282 (LC 19)

FORCES (lb) - Maximum Compression/Maximum Tension
TOP CHORD 1-2=-326/207, 2-3=-178/135, 3-4=-145/110, 4-5=-177/178, 5-6=-177/167, 6-7=-104/74, 7-8=-145/83, 8-9=-295/203
BOT CHORD 1-15=-168/251, 14-15=-168/251, 13-14=-168/251, 12-13=-168/251, 11-12=-168/251, 10-11=-168/251, 9-10=-168/251
WEBS 5-13=-180/126, 4-14=-185/161, 3-15=-174/150, 2-16=-241/204, 6-12=-185/158, 7-11=-174/151, 8-10=-244/206

NOTES

1) Unbalanced roof live loads have been considered for this design.
2) Wind: ASCE 7-16; Vult=115mph (3-second gust) Vasd=91mph; TCDL=6.0psf; BCDL=6.0psf; h=35ft; Ke=1.00; Cat. II; Exp C; Enclosed; MWFRS (envelope) exterior zone and C-C Exterior(2E) 0-4-1 to 5-4-1, Interior (1) 5-4-1 to 8-11-12, Exterior(2R) 8-11-12 to 13-11-12, Interior (1) 13-11-12 to 17-7-7 zone; cantilever left and right exposed ; end vertical left and right exposed;C-C for members and forces & MWFRS for reactions shown; Lumber DOL=1.60 plate grip DOL=1.60
3) Truss designed for wind loads in the plane of the truss only. For studs exposed to wind (normal to the face), see Standard Industry Gable End Details as applicable, or consult qualified building designer as per ANSI/TPI 1.
4) All plates are 1.5x4 MT20 unless otherwise indicated.
5) Gable requires continuous bottom chord bearing.
6) Gable studs spaced at 2-0-0 oc.
7) This truss has been designed for a 10.0 psf bottom chord live load nonconcurrent with any other live loads.
8) All bearings are assumed to be SP No.2 crushing capacity of 565 psi.
9) Provide mechanical connection (by others) of truss to bearing plate capable of withstanding 75 lb uplift at joint 1, 39 lb uplift at joint 9, 137 lb uplift at joint 14, 125 lb uplift at joint 15, 183 lb uplift at joint 16, 135 lb uplift at joint 12, 126 lb uplift at joint 11 and 186 lb uplift at joint 10.
10) This truss is designed in accordance with the 2018 International Residential Code sections R502.11.1 and R802.10.2 and referenced standard ANSI/TPI 1.

LOAD CASE(S) Standard

June 26,2025

WARNING - Verify design parameters and READ NOTES ON THIS AND INCLUDED MITEK REFERENCE PAGE MII-7473 rev. 1/2/2023 BEFORE USE.
Design valid for use only with MiTek® connectors. This design is based only upon parameters shown, and is for an individual building component, not a truss system. Before use, the building designer must verify the applicability of design parameters and properly incorporate this design into the overall building design. Bracing indicated is to prevent buckling of individual truss web and/or chord members only. Additional temporary and permanent bracing is always required for stability and to prevent collapse with possible personal injury and property damage. For general guidance regarding the fabrication, storage, delivery, erection and bracing of trusses and truss systems, see **ANSI/TPI1 Quality Criteria, and DSB-22** available from Truss Plate Institute (www.tpinst.org) and **BCSI Building Component Safety Information** available from the Structural Building Component Association (www.sbcscomponents.com)

MiTek®
16023 Swingley Ridge Rd
Chesterfield, MO 63017
314.434.1200 / MiTek-US.com

RELEASE FOR CONSTRUCTION
AS NOTED ON PLANS REVIEW
DEVELOPMENT SERVICES
LEE'S SUMMIT, MISSOURI
08/15/2025 5:17:50

Job	Truss	Truss Type	Qty	Ply	Roof - HM Lot 196
P250555-01	LG2	Lay-In Gable	1	1	I74462362 Job Reference (optional)

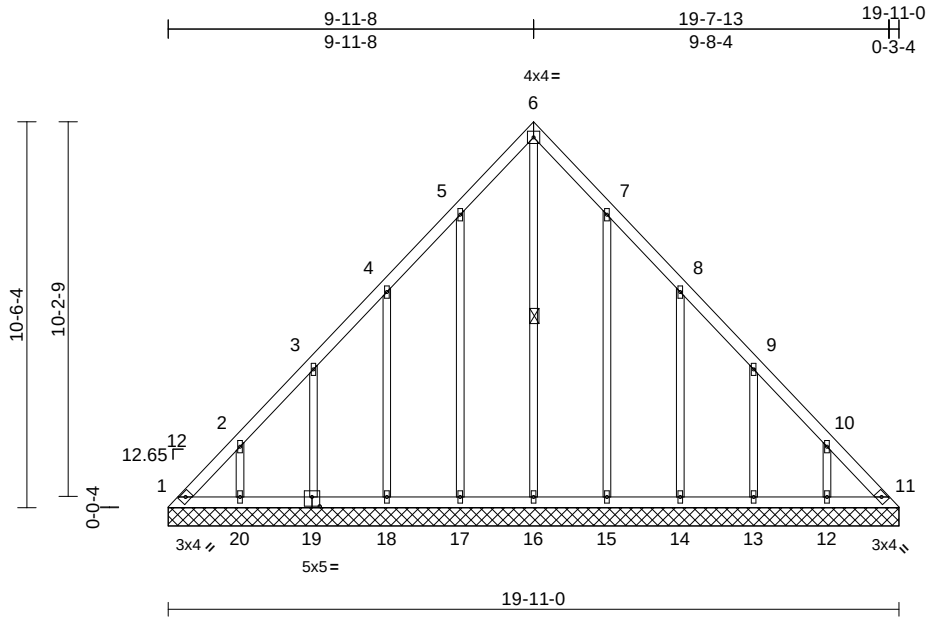

Scale = 1:62.8

Plate Offsets (X, Y): [19:0-2-8,0-3-0]

Loading	(psf)	Spacing	2-0-0	CSI		DEFL	in	(loc)	l/defl	L/d	PLATES	GRIP
TCLL (roof)	25.0	Plate Grip DOL	1.15	TC	0.08	Vert(LL)	n/a	-	n/a	999	MT20	244/190
TCDL	10.0	Lumber DOL	1.15	BC	0.06	Vert(TL)	n/a	-	n/a	999		
BCLL	0.0	Rep Stress Incr	YES	WB	0.28	Horiz(TL)	0.01	11	n/a	n/a		
BCDL	10.0	Code	IRC2018/TPI2014	Matrix-S							Weight: 110 lb	FT = 20%

LUMBER
TOP CHORD 2x4 SP No.2
BOT CHORD 2x4 SP No.2
OTHERS 2x3 SPF No.2

BRACING
TOP CHORD Structural wood sheathing directly applied or 6-0-0 oc purlins.
BOT CHORD Rigid ceiling directly applied or 10-0-0 oc bracing.
WEBS 1 Row at midpt 6-16

REACTIONS (size) 1=19-11-0, 11=19-11-0, 12=19-11-0, 13=19-11-0, 14=19-11-0, 15=19-11-0, 16=19-11-0, 17=19-11-0, 18=19-11-0, 19=19-11-0, 20=19-11-0
Max Horiz 1=288 (LC 9)
Max Uplift 1=-132 (LC 10), 11=-88 (LC 11), 12=-138 (LC 13), 13=-135 (LC 13), 14=-143 (LC 13), 15=-128 (LC 13), 17=-131 (LC 12), 18=-141 (LC 12), 19=-136 (LC 12), 20=-139 (LC 12)
Max Grav 1=285 (LC 12), 11=255 (LC 13), 12=209 (LC 20), 13=206 (LC 20), 14=207 (LC 20), 15=212 (LC 20), 16=231 (LC 13), 17=215 (LC 19), 18=206 (LC 19), 19=208 (LC 19), 20=208 (LC 19)

FORCES (lb) - Maximum Compression/Maximum Tension
TOP CHORD 1-2=-411/253, 2-3=-284/195, 3-4=-177/143, 4-5=-150/134, 5-6=-194/198, 6-7=-194/185, 7-8=-105/94, 8-9=-134/84, 9-10=-242/148, 10-11=-369/250
BOT CHORD 1-20=-189/282, 18-20=-189/283, 17-18=-187/282, 16-17=-187/282, 15-16=-187/282, 14-15=-187/282, 13-14=-187/282, 12-13=-187/282, 11-12=-187/281
WEBS 6-16=-207/148, 5-17=-176/155, 4-18=-191/165, 3-19=-186/162, 2-20=-181/155, 7-15=-176/152, 8-14=-191/166, 9-13=-185/160, 10-12=-181/155

NOTES
1) Unbalanced roof live loads have been considered for this design.
2) Wind: ASCE 7-16; Vult=115mph (3-second gust) Vasd=91mph; TCDL=6.0psf; BCDL=6.0psf; h=35ft; Ke=1.00; Cat. II; Exp C; Enclosed; MWFRS (envelope) exterior zone and C-C Exterior(2E) 0-4-1 to 5-4-1, Interior (1) 5-4-1 to 9-11-12, Exterior(2R) 9-11-12 to 14-11-12, Interior (1) 14-11-12 to 19-7-7 zone; cantilever left and right exposed ; end vertical left and right exposed;C-C for members and forces & MWFRS for reactions shown; Lumber DOL=1.60 plate grip DOL=1.60
3) Truss designed for wind loads in the plane of the truss only. For studs exposed to wind (normal to the face), see Standard Industry Gable End Details as applicable, or consult qualified building designer as per ANSI/TPI 1.
4) All plates are 1.5x4 MT20 unless otherwise indicated.
5) Gable requires continuous bottom chord bearing.
6) Gable studs spaced at 2-0-0 oc.
7) This truss has been designed for a 10.0 psf bottom chord live load nonconcurrent with any other live loads.
8) All bearings are assumed to be SP No.2 crushing capacity of 565 psi.
9) Provide mechanical connection (by others) of truss to bearing plate capable of withstanding 132 lb uplift at joint 1, 88 lb uplift at joint 11, 131 lb uplift at joint 17, 141 lb uplift at joint 18, 136 lb uplift at joint 19, 139 lb uplift at joint 20, 128 lb uplift at joint 15, 143 lb uplift at joint 14, 135 lb uplift at joint 13 and 138 lb uplift at joint 12.
10) This truss is designed in accordance with the 2018 International Residential Code sections R502.11.1 and R802.10.2 and referenced standard ANSI/TPI 1.

LOAD CASE(S) Standard

June 26,2025

WARNING - Verify design parameters and READ NOTES ON THIS AND INCLUDED MITEK REFERENCE PAGE MII-7473 rev. 1/2/2023 BEFORE USE.
Design valid for use only with MiTek® connectors. This design is based only upon parameters shown, and is for an individual building component, not a truss system. Before use, the building designer must verify the applicability of design parameters and properly incorporate this design into the overall building design. Bracing indicated is to prevent buckling of individual truss web and/or chord members only. Additional temporary and permanent bracing is always required for stability and to prevent collapse with possible personal injury and property damage. For general guidance regarding the fabrication, storage, delivery, erection and bracing of trusses and truss systems, see **ANSI/TPI1 Quality Criteria, and DSB-22** available from Truss Plate Institute (www.tpinst.org) and **BCSI Building Component Safety Information** available from the Structural Building Component Association (www.sbcscomponents.com)

MiTek®
16023 Swingley Ridge Rd
Chesterfield, MO 63017
314.434.1200 / MiTek-US.com

RELEASE FOR CONSTRUCTION
AS NOTED ON PLANS REVIEW
DEVELOPMENT SERVICES
LEE'S SUMMIT, MISSOURI
08/15/2025 5:17:50

Job	Truss	Truss Type	Qty	Ply	Roof - HM Lot 196
P250555-01	LG3	Lay-In Gable	1	1	I74462363 Job Reference (optional)

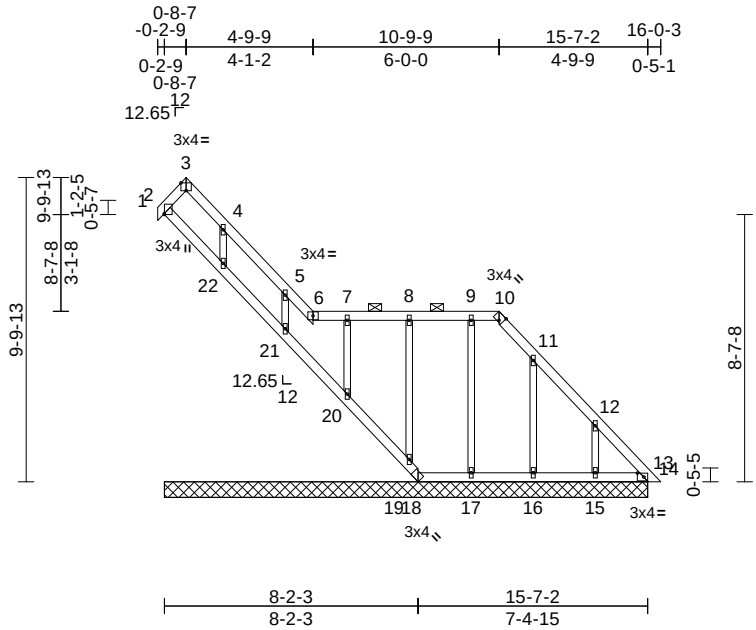

Scale = 1:74.3

Plate Offsets (X, Y): [3:Edge,0-3-0], [10:0-1-7,Edge], [13:0-2-7,0-1-8]

Loading	(psf)	Spacing	2-0-0	CSI		DEFL	in	(loc)	l/defl	L/d	PLATES	GRIP
TCLL (roof)	25.0	Plate Grip DOL	1.15	TC	0.14	Vert(LL)	n/a	-	n/a	999	MT20	244/190
TCDL	10.0	Lumber DOL	1.15	BC	0.15	Vert(CT)	n/a	-	n/a	999		
BCLL	0.0	Rep Stress Incr	YES	WB	0.10	Horz(CT)	0.01	13	n/a	n/a		
BCDL	10.0	Code	IRC2018/TPI2014	Matrix-S							Weight: 77 lb	FT = 20%

LUMBER
TOP CHORD 2x4 SP No.2
BOT CHORD 2x4 SP No.2
OTHERS 2x3 SPF No.2

BRACING
TOP CHORD Structural wood sheathing directly applied or 6-0-0 oc purlins, except 2-0-0 oc purlins (6-0-0 max.): 6-10.
BOT CHORD Rigid ceiling directly applied or 10-0-0 oc bracing.

REACTIONS (size) 2=15-7-2, 13=15-7-2, 15=15-7-2, 16=15-7-2, 17=15-7-2, 18=15-7-2, 19=15-7-2, 20=15-7-2, 21=15-7-2, 22=15-7-2
Max Horiz 2=-394 (LC 13)
Max Uplift 2=-73 (LC 11), 13=-57 (LC 11), 15=-148 (LC 13), 16=-155 (LC 13), 17=-98 (LC 13), 18=-339 (LC 13), 19=-50 (LC 9), 20=-39 (LC 9), 21=-130 (LC 13)
Max Grav 2=279 (LC 13), 13=250 (LC 13), 15=216 (LC 20), 16=201 (LC 20), 17=175 (LC 26), 18=129 (LC 11), 19=174 (LC 1), 20=190 (LC 1), 21=205 (LC 20), 22=163 (LC 1)

FORCES (lb) - Maximum Compression/Maximum Tension
TOP CHORD 1-2=0/0, 2-3=-57/46, 3-4=-113/115, 4-5=-83/76, 5-6=-55/50, 6-7=-49/31, 7-8=-49/31, 8-9=-49/31, 9-10=-49/31, 10-11=-90/48, 11-12=-229/180, 12-13=-363/292, 13-14=0/2
BOT CHORD 2-22=-311/389, 21-22=-336/425, 20-21=-330/415, 19-20=-331/420, 18-19=-335/452, 17-18=-218/282, 16-17=-218/282, 15-16=-218/282, 13-15=-218/282
WEBS 8-19=-136/67, 7-20=-148/63, 5-21=-183/144, 4-22=-122/38, 9-17=-150/118, 11-16=-202/182, 12-15=-192/162

NOTES
1) Unbalanced roof live loads have been considered for this design.
2) Wind: ASCE 7-16; Vult=115mph (3-second gust) Vasd=91mph; TCDL=6.0psf; BCDL=6.0psf; h=35ft; Ke=1.00; Cat. II; Exp C; Enclosed; MWFRS (envelope) exterior zone and C-C Corner(3E) 0-0-0 to 5-0-2, Exterior(2N) 5-0-2 to 11-0-2, Corner(3E) 11-0-2 to 16-0-5 zone; cantilever left and right exposed ; end vertical left and right exposed;C-C for members and forces & MWFRS for reactions shown; Lumber DOL=1.60 plate grip DOL=1.60
3) Truss designed for wind loads in the plane of the truss only. For studs exposed to wind (normal to the face), see Standard Industry Gable End Details as applicable, or consult qualified building designer as per ANSI/TPI 1.
4) Provide adequate drainage to prevent water ponding.
5) All plates are 1.5x4 MT20 unless otherwise indicated.
6) Gable requires continuous bottom chord bearing.
7) Gable studs spaced at 2-0-0 oc.
8) This truss has been designed for a 10.0 psf bottom chord live load nonconcurrent with any other live loads.
9) All bearings are assumed to be SP No.2 crushing capacity of 565 psi.
10) Provide mechanical connection (by others) of truss to bearing plate capable of withstanding 73 lb uplift at joint 2, 339 lb uplift at joint 18, 57 lb uplift at joint 13, 50 lb uplift at joint 19, 39 lb uplift at joint 20, 130 lb uplift at joint 21, 98 lb uplift at joint 17, 155 lb uplift at joint 16 and 148 lb uplift at joint 15.
11) Beveled plate or shim required to provide full bearing surface with truss chord at joint(s) 2, 19, 20, 21, 22.
12) This truss is designed in accordance with the 2018 International Residential Code sections R502.11.1 and R802.10.2 and referenced standard ANSI/TPI 1.
13) Graphical purlin representation does not depict the size or the orientation of the purlin along the top and/or bottom chord.

LOAD CASE(S) Standard

June 26,2025

WARNING - Verify design parameters and READ NOTES ON THIS AND INCLUDED MITEK REFERENCE PAGE MII-7473 rev. 1/2/2023 BEFORE USE.
Design valid for use only with MiTek® connectors. This design is based only upon parameters shown, and is for an individual building component, not a truss system. Before use, the building designer must verify the applicability of design parameters and properly incorporate this design into the overall building design. Bracing indicated is to prevent buckling of individual truss web and/or chord members only. Additional temporary and permanent bracing is always required for stability and to prevent collapse with possible personal injury and property damage. For general guidance regarding the fabrication, storage, delivery, erection and bracing of trusses and truss systems, see **ANSI/TPI1 Quality Criteria, and DSB-22** available from Truss Plate Institute (www.tpinst.org) and **BCSI Building Component Safety Information** available from the Structural Building Component Association (www.sbcscomponents.com)

MiTek®
16023 Swingley Ridge Rd
Chesterfield, MO 63017
314.434.1200 / MiTek-US.com

RELEASE FOR CONSTRUCTION
AS NOTED ON PLANS REVIEW
DEVELOPMENT SERVICES
LEE'S SUMMIT, MISSOURI
08/15/2025 5:17:50

Job	Truss	Truss Type	Qty	Ply	Roof - HM Lot 196
P250555-01	LG4	Lay-In Gable	1	1	I74462364 Job Reference (optional)

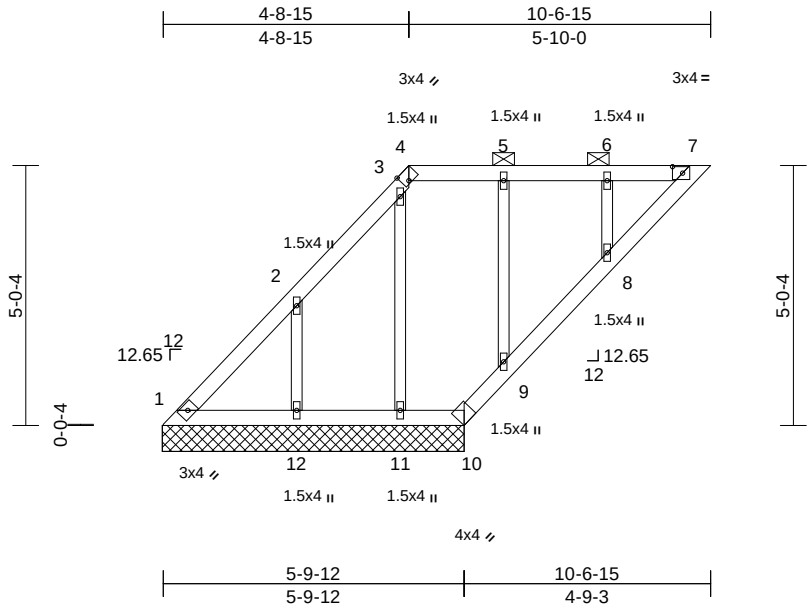

Scale = 1:44.5

Plate Offsets (X, Y): [4:0-1-7,Edge], [7:0-2-5,0-1-8]

Loading	(psf)	Spacing	2-0-0	CSI		DEFL	in	(loc)	l/defl	L/d	PLATES	GRIP
TCLL (roof)	25.0	Plate Grip DOL	1.15	TC	0.27	Vert(LL)	n/a	-	n/a	999	MT20	244/190
TCDL	10.0	Lumber DOL	1.15	BC	0.26	Vert(TL)	n/a	-	n/a	999		
BCLL	0.0	Rep Stress Incr	YES	WB	0.15	Horiz(TL)	0.00	10	n/a	n/a		
BCDL	10.0	Code	IRC2018/TPI2014	Matrix-S							Weight: 46 lb	FT = 20%

LUMBER
TOP CHORD 2x4 SP No.2
BOT CHORD 2x4 SP No.2
OTHERS 2x3 SPF No.2

BRACING
TOP CHORD Structural wood sheathing directly applied or 8-7-12 oc purlins, except 2-0-0 oc purlins (10-0-0 max.): 4-7.
BOT CHORD Rigid ceiling directly applied or 6-0-0 oc bracing.

REACTIONS (size) 1=5-10-0, 10=5-10-0, 11=5-10-0, 12=5-10-0
Max Horiz 1=215 (LC 9)
Max Uplift 1=-132 (LC 26), 10=-274 (LC 9), 11=-81 (LC 9), 12=-175 (LC 12)
Max Grav 1=217 (LC 9), 10=560 (LC 26), 11=206 (LC 1), 12=257 (LC 19)

FORCES (lb) - Maximum Compression/Maximum Tension
TOP CHORD 1-2=-461/295, 2-3=-331/295, 3-4=-84/58, 4-5=-162/160, 5-6=-163/161, 6-7=-162/161
BOT CHORD 1-12=-167/35, 11-12=-167/35, 10-11=-167/35, 9-10=-431/192, 8-9=-242/98, 7-8=-223/179
WEBS 6-8=-94/58, 5-9=-232/144, 3-11=-309/287, 2-12=-237/195

NOTES
1) Unbalanced roof live loads have been considered for this design.
2) Wind: ASCE 7-16; Vult=115mph (3-second gust) Vasd=91mph; TCDL=6.0psf; BCDL=6.0psf; h=35ft; Ke=1.00; Cat. II; Exp C; Enclosed; MWFRS (envelope) exterior zone and C-C Exterior(2E) 0-4-1 to 4-9-3, Exterior(2R) 4-9-3 to 9-9-3, Interior (1) 9-9-3 to 10-3-2 zone; cantilever left and right exposed ; end vertical left and right exposed;C-C for members and forces & MWFRS for reactions shown; Lumber DOL=1.60 plate grip DOL=1.60
3) Truss designed for wind loads in the plane of the truss only. For studs exposed to wind (normal to the face), see Standard Industry Gable End Details as applicable, or consult qualified building designer as per ANSI/TPI 1.
4) Provide adequate drainage to prevent water ponding.
5) All plates are 1.5x4 MT20 unless otherwise indicated.
6) Gable studs spaced at 2-0-0 oc.
7) This truss has been designed for a 10.0 psf bottom chord live load nonconcurrent with any other live loads.
8) All bearings are assumed to be SP No.2 crushing capacity of 565 psi.
9) Provide mechanical connection (by others) of truss to bearing plate capable of withstanding 132 lb uplift at joint 1, 274 lb uplift at joint 10, 81 lb uplift at joint 11 and 175 lb uplift at joint 12.
10) Non Standard bearing condition. Review required.
11) This truss is designed in accordance with the 2018 International Residential Code sections R502.11.1 and R802.10.2 and referenced standard ANSI/TPI 1.
12) Graphical purlin representation does not depict the size or the orientation of the purlin along the top and/or bottom chord.

LOAD CASE(S) Standard

June 26,2025

WARNING - Verify design parameters and READ NOTES ON THIS AND INCLUDED MITEK REFERENCE PAGE MII-7473 rev. 1/2/2023 BEFORE USE.
Design valid for use only with MiTek® connectors. This design is based only upon parameters shown, and is for an individual building component, not a truss system. Before use, the building designer must verify the applicability of design parameters and properly incorporate this design into the overall building design. Bracing indicated is to prevent buckling of individual truss web and/or chord members only. Additional temporary and permanent bracing is always required for stability and to prevent collapse with possible personal injury and property damage. For general guidance regarding the fabrication, storage, delivery, erection and bracing of trusses and truss systems, see **ANSI/TPI1 Quality Criteria, and DSB-22** available from Truss Plate Institute (www.tpinst.org) and **BCSI Building Component Safety Information** available from the Structural Building Component Association (www.sbcscomponents.com)

MiTek®
16023 Swingley Ridge Rd
Chesterfield, MO 63017
314.434.1200 / MiTek-US.com

RELEASE FOR CONSTRUCTION
AS NOTED ON PLANS REVIEW
DEVELOPMENT SERVICES
LEE'S SUMMIT, MISSOURI
08/15/2025 5:17:50

Job	Truss	Truss Type	Qty	Ply	Roof - HM Lot 196
P250555-01	M1	Half Hip	1	1	I74462365 Job Reference (optional)

Premier Building Supply (Springhill, KS), Spring Hills, KS - 66083,

Run: 8.63 S Sep 26 2024 Print: 8.630 S Sep 26 2024 MiTek Industries, Inc. Wed Jun 25 09:29:35 Page: 1
ID:2WuDn3TsUZ8mtlEISN0jjZzbevu-RfC?PsB70Hq3NSgPqnL8w3uITXbGKWrCDoi7J4zJC?f

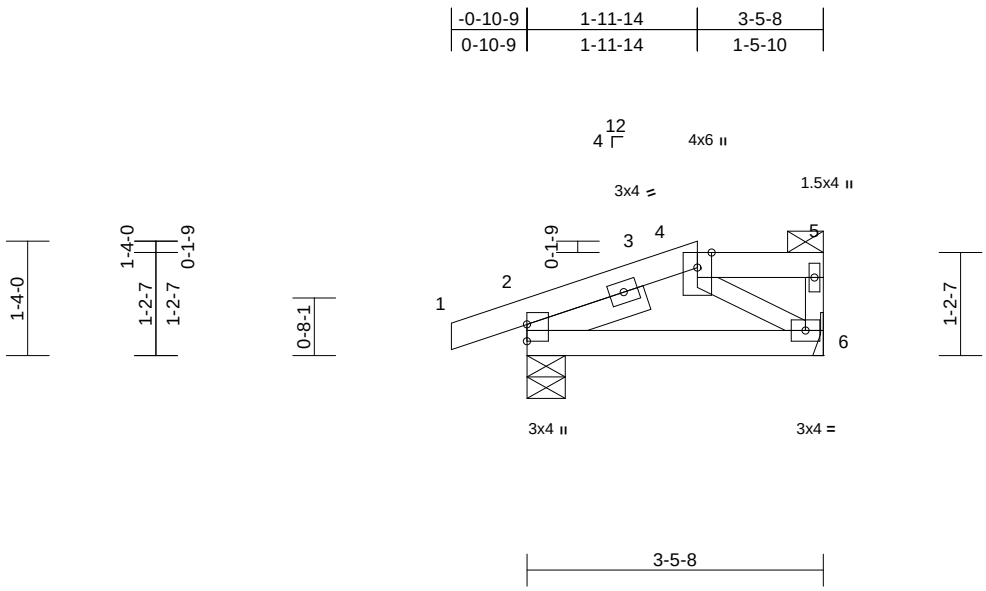

Scale = 1:26.9

Plate Offsets (X, Y): [2:Edge,0-0-0]

Loading	(psf)	Spacing	2-0-0	CSI		DEFL	in	(loc)	l/defl	L/d	PLATES	GRIP
TCLL (roof)	25.0	Plate Grip DOL	1.15	TC	0.06	Vert(LL)	-0.01	2-6	>999	240	MT20	197/144
TCDL	10.0	Lumber DOL	1.15	BC	0.14	Vert(CT)	-0.02	2-6	>999	180		
BCLL	0.0	Rep Stress Incr	YES	WB	0.04	Horz(CT)	0.00	6	n/a	n/a		
BCDL	10.0	Code	IRC2018/TPI2014	Matrix-P							Weight: 16 lb	FT = 20%

LUMBER

TOP CHORD 2x4 SP No.2
BOT CHORD 2x4 SP No.2
WEBS 2x3 SPF No.2
SLIDER Left 2x4 SP No.2 -- 1-5-6

BRACING

TOP CHORD Structural wood sheathing directly applied or 3-5-10 oc purlins, except end verticals, and 2-0-0 oc purlins: 4-5.
BOT CHORD Rigid ceiling directly applied or 10-0-0 oc bracing.

REACTIONS (size) 2=0-5-6, 6= Mechanical
Max Horiz 2=41 (LC 9)
Max Uplift 2=-76 (LC 8), 6=-30 (LC 8)
Max Grav 2=221 (LC 1), 6=143 (LC 1)

FORCES (lb) - Maximum Compression/Maximum Tension
TOP CHORD 1-2=-5/0, 2-4=-139/127, 4-5=-20/24, 5-6=-48/59
BOT CHORD 2-6=-135/98
WEBS 4-6=-106/150

NOTES

1) Unbalanced roof live loads have been considered for this design.
2) Wind: ASCE 7-16; Vult=115mph (3-second gust) Vasd=91mph; TCDL=6.0psf; BCDL=6.0psf; h=35ft; Ke=1.00; Cat. II; Exp C; Enclosed; MWFRS (envelope) exterior zone and C-C Exterior(2E) zone; cantilever left and right exposed ; end vertical left and right exposed;C-C for members and forces & MWFRS for reactions shown; Lumber DOL=1.60 plate grip DOL=1.60
3) Provide adequate drainage to prevent water ponding.
4) This truss has been designed for a 10.0 psf bottom chord live load nonconcurrent with any other live loads.
5) Bearings are assumed to be: Joint 2 SP No.2 crushing capacity of 565 psi.
6) Refer to girder(s) for truss to truss connections.
7) Provide mechanical connection (by others) of truss to bearing plate capable of withstanding 30 lb uplift at joint 6 and 76 lb uplift at joint 2.
8) This truss is designed in accordance with the 2018 International Residential Code sections R502.11.1 and R802.10.2 and referenced standard ANSI/TPI 1.
9) Graphical purlin representation does not depict the size or the orientation of the purlin along the top and/or bottom chord.

LOAD CASE(S) Standard

June 26,2025

WARNING - Verify design parameters and READ NOTES ON THIS AND INCLUDED MITEK REFERENCE PAGE MII-7473 rev. 1/2/2023 BEFORE USE.
Design valid for use only with MiTek® connectors. This design is based only upon parameters shown, and is for an individual building component, not a truss system. Before use, the building designer must verify the applicability of design parameters and properly incorporate this design into the overall building design. Bracing indicated is to prevent buckling of individual truss web and/or chord members only. Additional temporary and permanent bracing is always required for stability and to prevent collapse with possible personal injury and property damage. For general guidance regarding the fabrication, storage, delivery, erection and bracing of trusses and truss systems, see **ANSI/TPI1 Quality Criteria, and DSB-22** available from Truss Plate Institute (www.tpinst.org) and **BCSI Building Component Safety Information** available from the Structural Building Component Association (www.sbcscomponents.com)

MiTek®
16023 Swingley Ridge Rd
Chesterfield, MO 63017
314.434.1200 / MiTek-US.com

RELEASE FOR CONSTRUCTION
AS NOTED ON PLANS REVIEW
DEVELOPMENT SERVICES
LEE'S SUMMIT, MISSOURI
08/15/2025 5:17:50

Job	Truss	Truss Type	Qty	Ply	Roof - HM Lot 196
P250555-01	M2	Monopitch	4	1	I74462366 Job Reference (optional)

Premier Building Supply (Springhill, KS), Spring Hills, KS - 66083, Run: 8.63 S Sep 26 2024 Print: 8.630 S Sep 26 2024 MiTek Industries, Inc. Wed Jun 25 09:29:35 Page: 1
ID:WiSb?PUUFtGdVvpU04XyGnzbevt-RfC?PsB70Hq3NSgPqnL8w3uITXbGKWrCDoi7J4zJC?f

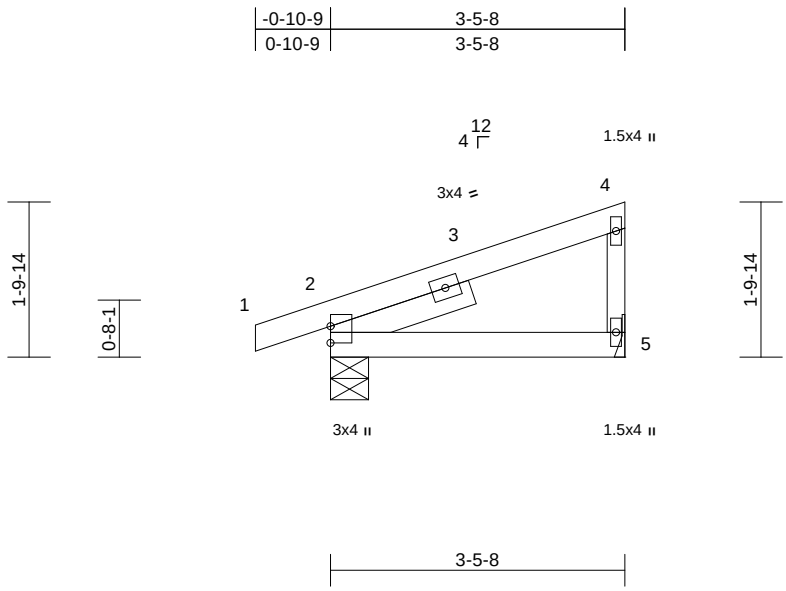

Scale = 1:27.1

Plate Offsets (X, Y): [2:Edge,0-0-0]

Loading	(psf)	Spacing	2-0-0	CSI		DEFL	in	(loc)	l/defl	L/d	PLATES	GRIP
TCLL (roof)	25.0	Plate Grip DOL	1.15	TC	0.26	Vert(LL)	-0.01	2-5	>999	240	MT20	197/144
TCDL	10.0	Lumber DOL	1.15	BC	0.13	Vert(CT)	-0.02	2-5	>999	180		
BCLL	0.0	Rep Stress Incr	YES	WB	0.00	Horz(CT)	0.00	5	n/a	n/a		
BCDL	10.0	Code	IRC2018/TPI2014	Matrix-P							Weight: 16 lb	FT = 20%

LUMBER
TOP CHORD 2x4 SP No.2
BOT CHORD 2x4 SP No.2
WEBS 2x3 SPF No.2
SLIDER Left 2x4 SP No.2 -- 1-8-12

BRACING
TOP CHORD Structural wood sheathing directly applied or 3-5-10 oc purlins, except end verticals.
BOT CHORD Rigid ceiling directly applied or 10-0-0 oc bracing.

REACTIONS (size) 2=0-5-6, 5= Mechanical
Max Horiz 2=69 (LC 9)
Max Uplift 2=-72 (LC 8), 5=-37 (LC 12)
Max Grav 2=221 (LC 1), 5=143 (LC 1)

FORCES (lb) - Maximum Compression/Maximum Tension
TOP CHORD 1-2=-5/0, 2-4=-90/54, 4-5=-109/175
BOT CHORD 2-5=-31/33

NOTES
1) Wind: ASCE 7-16; Vult=115mph (3-second gust) Vasd=91mph; TCDL=6.0psf; BCDL=6.0psf; h=35ft; Ke=1.00; Cat. II; Exp C; Enclosed; MWFRS (envelope) exterior zone and C-C Exterior(2E) zone; cantilever left and right exposed ; end vertical left and right exposed;C-C for members and forces & MWFRS for reactions shown; Lumber DOL=1.60 plate grip DOL=1.60
2) This truss has been designed for a 10.0 psf bottom chord live load nonconcurrent with any other live loads.
3) Bearings are assumed to be: Joint 2 SP No.2 crushing capacity of 565 psi.
4) Refer to girder(s) for truss to truss connections.
5) Provide mechanical connection (by others) of truss to bearing plate capable of withstanding 37 lb uplift at joint 5 and 72 lb uplift at joint 2.
6) This truss is designed in accordance with the 2018 International Residential Code sections R502.11.1 and R802.10.2 and referenced standard ANSI/TPI 1.

LOAD CASE(S) Standard

STATE OF MISSOURI
JIE LU
NUMBER
PE-029327
PROFESSIONAL ENGINEER
June 26,2025

WARNING - Verify design parameters and READ NOTES ON THIS AND INCLUDED MITEK REFERENCE PAGE MII-7473 rev. 1/2/2023 BEFORE USE.
Design valid for use only with MiTek® connectors. This design is based only upon parameters shown, and is for an individual building component, not a truss system. Before use, the building designer must verify the applicability of design parameters and properly incorporate this design into the overall building design. Bracing indicated is to prevent buckling of individual truss web and/or chord members only. Additional temporary and permanent bracing is always required for stability and to prevent collapse with possible personal injury and property damage. For general guidance regarding the fabrication, storage, delivery, erection and bracing of trusses and truss systems, see **ANSI/TPI1 Quality Criteria, and DSB-22** available from Truss Plate Institute (www.tpinst.org) and **BCSI Building Component Safety Information** available from the Structural Building Component Association (www.sbcscomponents.com)

MiTek®
16023 Swingley Ridge Rd
Chesterfield, MO 63017
314.434.1200 / MiTek-US.com

RELEASE FOR CONSTRUCTION
AS NOTED ON PLANS REVIEW
DEVELOPMENT SERVICES
LEE'S SUMMIT, MISSOURI
08/15/2025 5:17:50

Job	Truss	Truss Type	Qty	Ply	Roof - HM Lot 196
P250555-01	M3	Half Hip	1	1	I74462367 Job Reference (optional)

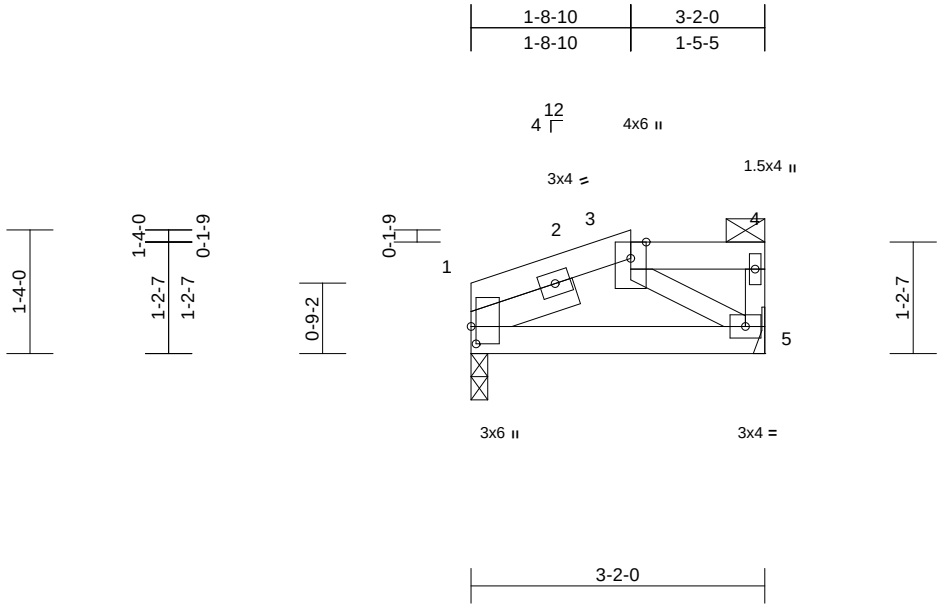

Scale = 1:24.8

Plate Offsets (X, Y): [1:0-2-4,0-0-10]

Loading	(psf)	Spacing	2-0-0	CSI		DEFL	in	(loc)	l/defl	L/d	PLATES	GRIP
TCLL (roof)	25.0	Plate Grip DOL	1.15	TC	0.05	Vert(LL)	-0.01	1-5	>999	240	MT20	244/190
TCDL	10.0	Lumber DOL	1.15	BC	0.11	Vert(CT)	-0.01	1-5	>999	180		
BCLL	0.0	Rep Stress Incr	YES	WB	0.04	Horz(CT)	0.00	5	n/a	n/a		
BCDL	10.0	Code	IRC2018/TPI2014	Matrix-P							Weight: 13 lb	FT = 20%

LUMBER

TOP CHORD 2x4 SP No.2
BOT CHORD 2x4 SP No.2
WEBS 2x3 SPF No.2
SLIDER Left 2x4 SP No.2 -- 1-2-6

BRACING

TOP CHORD Structural wood sheathing directly applied or 3-5-5 oc purlins, except end verticals, and 2-0-0 oc purlins: 3-4.
BOT CHORD Rigid ceiling directly applied or 10-0-0 oc bracing.

REACTIONS (size) 1=0-2-2, 5= Mechanical
Max Horiz 1=42 (LC 11)
Max Uplift 1=-27 (LC 8), 5=-33 (LC 8)
Max Grav 1=138 (LC 1), 5=138 (LC 1)

FORCES (lb) - Maximum Compression/Maximum Tension
TOP CHORD 1-3=-125/126, 3-4=-20/24, 4-5=-47/58
BOT CHORD 1-5=-132/87
WEBS 3-5=-103/147

NOTES

1) Unbalanced roof live loads have been considered for this design.
2) Wind: ASCE 7-16; Vult=115mph (3-second gust) Vasd=91mph; TCDL=6.0psf; BCDL=6.0psf; h=35ft; Ke=1.00; Cat. II; Exp C; Enclosed; MWFRS (envelope) exterior zone and C-C Exterior(2E) zone; cantilever left and right exposed ; end vertical left and right exposed;C-C for members and forces & MWFRS for reactions shown; Lumber DOL=1.60 plate grip DOL=1.60
3) Provide adequate drainage to prevent water ponding.
4) This truss has been designed for a 10.0 psf bottom chord live load nonconcurrent with any other live loads.
5) Bearings are assumed to be: Joint 1 SP No.2 crushing capacity of 565 psi.
6) Refer to girder(s) for truss to truss connections.
7) Provide mechanical connection (by others) of truss to bearing plate at joint(s) 1.
8) Provide mechanical connection (by others) of truss to bearing plate capable of withstanding 27 lb uplift at joint 1 and 33 lb uplift at joint 5.
9) This truss is designed in accordance with the 2018 International Residential Code sections R502.11.1 and R802.10.2 and referenced standard ANSI/TPI 1.
10) Graphical purlin representation does not depict the size or the orientation of the purlin along the top and/or bottom chord.

LOAD CASE(S) Standard

STATE OF MISSOURI
JIE LU
NUMBER
PE-029327
PROFESSIONAL ENGINEER

June 26,2025

WARNING - Verify design parameters and READ NOTES ON THIS AND INCLUDED MITEK REFERENCE PAGE MII-7473 rev. 1/2/2023 BEFORE USE.
Design valid for use only with MiTek® connectors. This design is based only upon parameters shown, and is for an individual building component, not a truss system. Before use, the building designer must verify the applicability of design parameters and properly incorporate this design into the overall building design. Bracing indicated is to prevent buckling of individual truss web and/or chord members only. Additional temporary and permanent bracing is always required for stability and to prevent collapse with possible personal injury and property damage. For general guidance regarding the fabrication, storage, delivery, erection and bracing of trusses and truss systems, see **ANSI/TPI1 Quality Criteria, and DSB-22** available from Truss Plate Institute (www.tpinst.org) and **BCSI Building Component Safety Information** available from the Structural Building Component Association (www.sbcscomponents.com)

MiTek®
16023 Swingley Ridge Rd
Chesterfield, MO 63017
314.434.1200 / MiTek-US.com

RELEASE FOR CONSTRUCTION
AS NOTED ON PLANS REVIEW
DEVELOPMENT SERVICES
LEE'S SUMMIT, MISSOURI
08/15/2025 5:17:50

Job	Truss	Truss Type	Qty	Ply	Roof - HM Lot 196
P250555-01	M4	Roof Special	1	1	I74462368 Job Reference (optional)

Premier Building Supply (Springhill, KS), Spring Hills, KS - 66083, Run: 8.63 E Feb 9 2023 Print: 8.630 E Feb 9 2023 MiTek Industries, Inc. Thu Jun 26 16:03:12 Page: 1
ID:WiSb?PUUFtGdVvpU04XyGnzbevt-cUHs0dwPDFAqnupw1JjbjVxC2QdY286B700sQrz2X8j

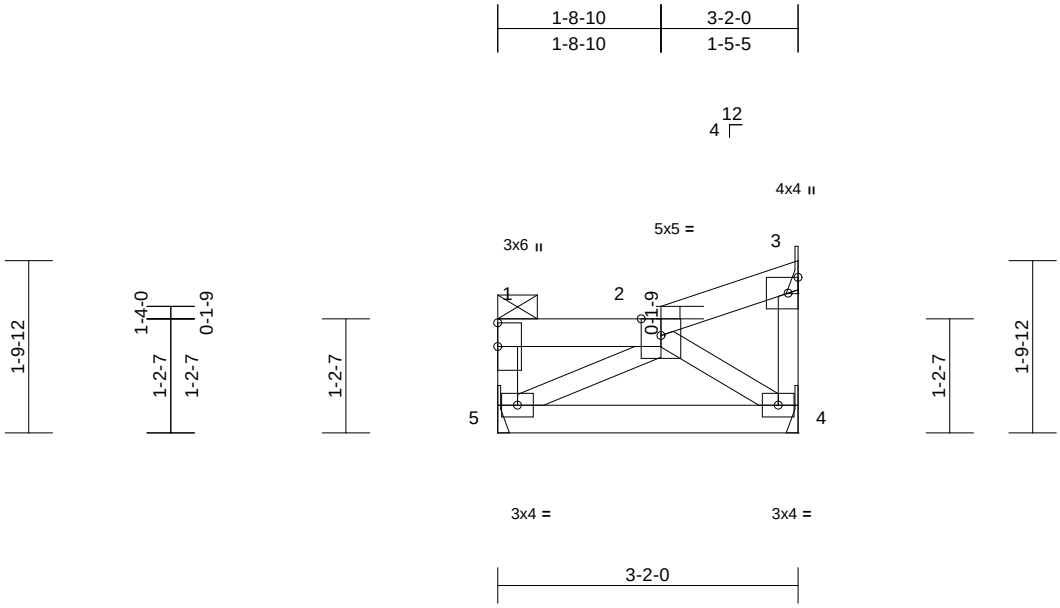

Scale = 1:24.3

Loading	(psf)	Spacing	2-0-0	CSI		DEFL	in	(loc)	l/defl	L/d	PLATES	GRIP
TCLL (roof)	25.0	Plate Grip DOL	1.15	TC	0.05	Vert(LL)	0.00	4-5	>999	240	MT20	197/144
TCDL	10.0	Lumber DOL	1.15	BC	0.10	Vert(CT)	-0.01	4-5	>999	180		
BCLL	0.0	Rep Stress Incr	YES	WB	0.03	Horz(CT)	0.00	4	n/a	n/a		
BCDL	10.0	Code	IRC2018/TPI2014	Matrix-P							Weight: 14 lb	FT = 20%

LUMBER
TOP CHORD 2x4 SP No.2
BOT CHORD 2x4 SP No.2
WEBS 2x3 SPF No.2

BRACING
TOP CHORD Structural wood sheathing directly applied or 3-2-0 oc purlins, except end verticals, and 2-0-0 oc purlins: 1-2.
BOT CHORD Rigid ceiling directly applied or 10-0-0 oc bracing.

REACTIONS (lb/size) 3=47/ Mechanical, 4=86/ Mechanical, 5=133/ Mechanical
Max Horiz 5=64 (LC 9)
Max Uplift 3=-20 (LC 9), 4=-10 (LC 12), 5=-30 (LC 8)

FORCES (lb) - Max. Comp./Max. Ten. - All forces 250 (lb) or less except when shown.

NOTES
1) Wind: ASCE 7-16; Vult=115mph (3-second gust) Vasd=91mph; TCDL=6.0psf; BCDL=6.0psf; h=35ft; Ke=1.00; Cat. II; Exp C; Enclosed; MWFRS (envelope) exterior zone and C-C Exterior(2E) 0-1-4 to 1-8-10, Interior (1) 1-8-10 to 3-0-12 zone; cantilever left and right exposed ; end vertical left and right exposed;C-C for members and forces & MWFRS for reactions shown; Lumber DOL=1.60 plate grip DOL=1.60
2) Provide adequate drainage to prevent water ponding.
3) This truss has been designed for a 10.0 psf bottom chord live load nonconcurrent with any other live loads.
4) Refer to girder(s) for truss to truss connections.
5) Provide mechanical connection (by others) of truss to bearing plate capable of withstanding 30 lb uplift at joint 5, 20 lb uplift at joint 3 and 10 lb uplift at joint 4.
6) This truss is designed in accordance with the 2018 International Residential Code sections R502.11.1 and R802.10.2 and referenced standard ANSI/TPI 1.
7) Graphical purlin representation does not depict the size or the orientation of the purlin along the top and/or bottom chord.
8) Gap between inside of top chord bearing and first diagonal or vertical web shall not exceed 0.500in.

LOAD CASE(S) Standard

STATE OF MISSOURI
JIE LU
NUMBER
PE-029327
PROFESSIONAL ENGINEER

June 26,2025

WARNING - Verify design parameters and READ NOTES ON THIS AND INCLUDED MITEK REFERENCE PAGE MII-7473 rev. 1/2/2023 BEFORE USE.
Design valid for use only with MiTek® connectors. This design is based only upon parameters shown, and is for an individual building component, not a truss system. Before use, the building designer must verify the applicability of design parameters and properly incorporate this design into the overall building design. Bracing indicated is to prevent buckling of individual truss web and/or chord members only. Additional temporary and permanent bracing is always required for stability and to prevent collapse with possible personal injury and property damage. For general guidance regarding the fabrication, storage, delivery, erection and bracing of trusses and truss systems, see **ANSI/TPI1 Quality Criteria, and DSB-22** available from Truss Plate Institute (www.tpinst.org) and **BCSI Building Component Safety Information** available from the Structural Building Component Association (www.sbcscomponents.com)

MiTek®
16023 Swingley Ridge Rd
Chesterfield, MO 63017
314.434.1200 / MiTek-US.com

RELEASE FOR CONSTRUCTION
AS NOTED ON PLANS REVIEW
DEVELOPMENT SERVICES
LEE'S SUMMIT, MISSOURI
08/15/2025 5:17:50

Job	Truss	Truss Type	Qty	Ply	Roof - HM Lot 196
P250555-01	M5	Monopitch	1	1	I74462369 Job Reference (optional)

Premier Building Supply (Springhill, KS), Spring Hills, KS - 66083, Run: 8.63 S Sep 26 2024 Print: 8.630 S Sep 26 2024 MiTek Industries, Inc. Wed Jun 25 09:29:35 Page: 1
ID:WiSb?PUUFtGdVvpU04XyGnzbevt-RfC?PsB70Hq3NSgPqnL8w3uITXbGKWrCDoi7J4zJC?f

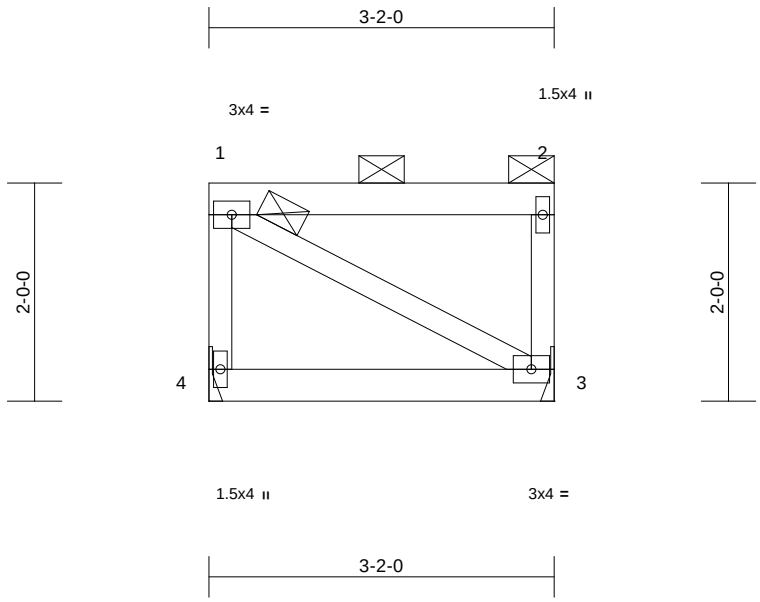

Scale = 1:21.1

Loading	(psf)	Spacing	2-0-0	CSI		DEFL	in	(loc)	l/defl	L/d	PLATES	GRIP
TCLL (roof)	25.0	Plate Grip DOL	1.15	TC	0.21	Vert(LL)	0.00	3-4	>999	240	MT20	197/144
TCDL	10.0	Lumber DOL	1.15	BC	0.10	Vert(CT)	-0.01	3-4	>999	180		
BCLL	0.0	Rep Stress Incr	YES	WB	0.02	Horz(CT)	0.00	3	n/a	n/a		
BCDL	10.0	Code	IRC2018/TPI2014	Matrix-P							Weight: 14 lb	FT = 20%

LUMBER
TOP CHORD 2x4 SP No.2
BOT CHORD 2x4 SP No.2
WEBS 2x3 SPF No.2

BRACING
TOP CHORD 2-0-0 oc purlins: 1-2, except end verticals.
BOT CHORD Rigid ceiling directly applied or 10-0-0 oc bracing.

REACTIONS (size) 3= Mechanical, 4= Mechanical
Max Horiz 4=-70 (LC 8)
Max Uplift 3=-49 (LC 9), 4=-49 (LC 8)
Max Grav 3=133 (LC 1), 4=133 (LC 1)

FORCES (lb) - Maximum Compression/Maximum Tension
TOP CHORD 1-4=-103/193, 1-2=-35/38, 2-3=-103/157
BOT CHORD 3-4=-98/101
WEBS 1-3=-72/72

NOTES
1) Wind: ASCE 7-16; Vult=115mph (3-second gust) Vasd=91mph; TCDL=6.0psf; BCDL=6.0psf; h=35ft; Ke=1.00; Cat. II; Exp C; Enclosed; MWFRS (envelope) exterior zone and C-C Corner (3) zone; cantilever left and right exposed ; end vertical left and right exposed;C-C for members and forces & MWFRS for reactions shown; Lumber DOL=1.60 plate grip DOL=1.60
2) Provide adequate drainage to prevent water ponding.
3) This truss has been designed for a 10.0 psf bottom chord live load nonconcurrent with any other live loads.
4) Refer to girder(s) for truss to truss connections.
5) Provide mechanical connection (by others) of truss to bearing plate capable of withstanding 49 lb uplift at joint 4 and 49 lb uplift at joint 3.
6) This truss is designed in accordance with the 2018 International Residential Code sections R502.11.1 and R802.10.2 and referenced standard ANSI/TPI 1.
7) Graphical purlin representation does not depict the size or the orientation of the purlin along the top and/or bottom chord.

LOAD CASE(S) Standard

STATE OF MISSOURI
JIE LU
NUMBER
PE-029327
PROFESSIONAL ENGINEER

June 26,2025

WARNING - Verify design parameters and READ NOTES ON THIS AND INCLUDED MITEK REFERENCE PAGE MII-7473 rev. 1/2/2023 BEFORE USE.
Design valid for use only with MiTek® connectors. This design is based only upon parameters shown, and is for an individual building component, not a truss system. Before use, the building designer must verify the applicability of design parameters and properly incorporate this design into the overall building design. Bracing indicated is to prevent buckling of individual truss web and/or chord members only. Additional temporary and permanent bracing is always required for stability and to prevent collapse with possible personal injury and property damage. For general guidance regarding the fabrication, storage, delivery, erection and bracing of trusses and truss systems, see **ANSI/TPI1 Quality Criteria, and DSB-22** available from Truss Plate Institute (www.tpinst.org) and **BCSI Building Component Safety Information** available from the Structural Building Component Association (www.sbcscomponents.com)

MiTek®
16023 Swingley Ridge Rd
Chesterfield, MO 63017
314.434.1200 / MiTek-US.com

RELEASE FOR CONSTRUCTION
AS NOTED ON PLANS REVIEW
DEVELOPMENT SERVICES
LEE'S SUMMIT, MISSOURI
08/15/2025 5:17:50

Job	Truss	Truss Type	Qty	Ply	Roof - HM Lot 196
P250555-01	M6	Monopitch	1	1	I74462370 Job Reference (optional)

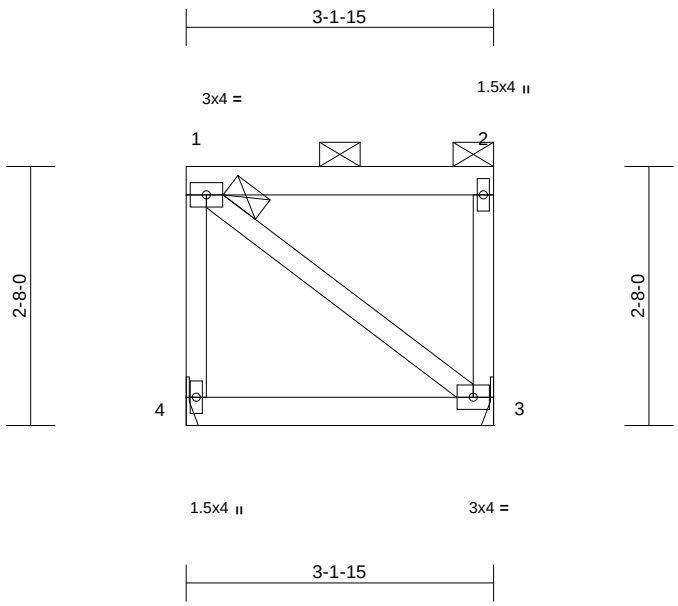

Scale = 1:23.7

Loading	(psf)	Spacing	2-0-0	CSI		DEFL	in	(loc)	l/defl	L/d	PLATES	GRIP
TCLL (roof)	25.0	Plate Grip DOL	1.15	TC	0.21	Vert(LL)	0.00	3-4	>999	240	MT20	197/144
TCDL	10.0	Lumber DOL	1.15	BC	0.10	Vert(CT)	-0.01	3-4	>999	180		
BCLL	0.0	Rep Stress Incr	YES	WB	0.04	Horz(CT)	0.00	3	n/a	n/a		
BCDL	10.0	Code	IRC2018/TPI2014	Matrix-P							Weight: 16 lb	FT = 20%

LUMBER
TOP CHORD 2x4 SP No.2
BOT CHORD 2x4 SP No.2
WEBS 2x3 SPF No.2

BRACING
TOP CHORD 2-0-0 oc purlins: 1-2, except end verticals.
BOT CHORD Rigid ceiling directly applied or 10-0-0 oc bracing.

REACTIONS (size) 3= Mechanical, 4= Mechanical
Max Horiz 4=97 (LC 9)
Max Uplift 3=-68 (LC 9), 4=-68 (LC 8)
Max Grav 3=133 (LC 1), 4=133 (LC 1)

FORCES (lb) - Maximum Compression/Maximum Tension
TOP CHORD 1-4=-124/227, 1-2=-49/53, 2-3=-103/157
BOT CHORD 3-4=-136/140
WEBS 1-3=-112/112

NOTES
1) Wind: ASCE 7-16; Vult=115mph (3-second gust) Vasd=91mph; TCDL=6.0psf; BCDL=6.0psf; h=35ft; Ke=1.00; Cat. II; Exp C; Enclosed; MWFRS (envelope) exterior zone and C-C Corner (3) zone; cantilever left and right exposed ; end vertical left and right exposed;C-C for members and forces & MWFRS for reactions shown; Lumber DOL=1.60 plate grip DOL=1.60
2) Provide adequate drainage to prevent water ponding.
3) This truss has been designed for a 10.0 psf bottom chord live load nonconcurrent with any other live loads.
4) Refer to girder(s) for truss to truss connections.
5) Provide mechanical connection (by others) of truss to bearing plate capable of withstanding 68 lb uplift at joint 4 and 68 lb uplift at joint 3.
6) This truss is designed in accordance with the 2018 International Residential Code sections R502.11.1 and R802.10.2 and referenced standard ANSI/TPI 1.
7) Graphical purlin representation does not depict the size or the orientation of the purlin along the top and/or bottom chord.

LOAD CASE(S) Standard

STATE OF MISSOURI
JIE LU
NUMBER
PE-029327
PROFESSIONAL ENGINEER

June 26,2025

WARNING - Verify design parameters and READ NOTES ON THIS AND INCLUDED MITEK REFERENCE PAGE MII-7473 rev. 1/2/2023 BEFORE USE.
Design valid for use only with MiTek® connectors. This design is based only upon parameters shown, and is for an individual building component, not a truss system. Before use, the building designer must verify the applicability of design parameters and properly incorporate this design into the overall building design. Bracing indicated is to prevent buckling of individual truss web and/or chord members only. Additional temporary and permanent bracing is always required for stability and to prevent collapse with possible personal injury and property damage. For general guidance regarding the fabrication, storage, delivery, erection and bracing of trusses and truss systems, see **ANSI/TPI1 Quality Criteria, and DSB-22** available from Truss Plate Institute (www.tpinst.org) and **BCSI Building Component Safety Information** available from the Structural Building Component Association (www.sbcscomponents.com)

MiTek®
16023 Swingley Ridge Rd
Chesterfield, MO 63017
314.434.1200 / MiTek-US.com

RELEASE FOR CONSTRUCTION
AS NOTED ON PLANS REVIEW
DEVELOPMENT SERVICES
LEE'S SUMMIT, MISSOURI
08/15/2025 5:17:51

Job	Truss	Truss Type	Qty	Ply	Roof - HM Lot 196
P250555-01	M7	Monopitch	1	1	I74462371 Job Reference (optional)

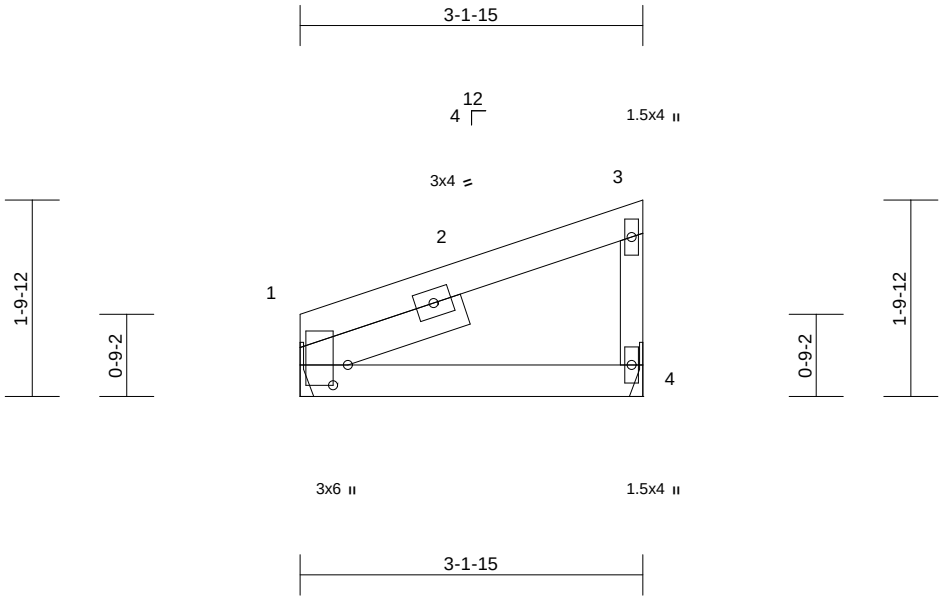

Scale = 1:21.3

Plate Offsets (X, Y): [1:0-2-4,0-1-10]

Loading	(psf)	Spacing	2-0-0	CSI		DEFL	in	(loc)	l/defl	L/d	PLATES	GRIP
TCLL (roof)	25.0	Plate Grip DOL	1.15	TC	0.24	Vert(LL)	-0.01	1-4	>999	240	MT20	244/190
TCDL	10.0	Lumber DOL	1.15	BC	0.11	Vert(CT)	-0.01	1-4	>999	180		
BCLL	0.0	Rep Stress Incr	YES	WB	0.00	Horz(CT)	0.00	4	n/a	n/a		
BCDL	10.0	Code	IRC2018/TPI2014	Matrix-P							Weight: 13 lb	FT = 20%

LUMBER

TOP CHORD 2x4 SP No.2
BOT CHORD 2x4 SP No.2
WEBS 2x3 SPF No.2
SLIDER Left 2x4 SP No.2 -- 1-7-5

BRACING

TOP CHORD Structural wood sheathing directly applied or 3-1-15 oc purlins, except end verticals.
BOT CHORD Rigid ceiling directly applied or 10-0-0 oc bracing.

REACTIONS (size) 1= Mechanical, 4= Mechanical
Max Horiz 1=70 (LC 9)
Max Uplift 1=-23 (LC 8), 4=-38 (LC 12)
Max Grav 1=138 (LC 1), 4=138 (LC 1)

FORCES (lb) - Maximum Compression/Maximum Tension
TOP CHORD 1-3=-85/52, 3-4=-107/162
BOT CHORD 1-4=-30/33

NOTES

1) Wind: ASCE 7-16; Vult=115mph (3-second gust) Vasd=91mph; TCDL=6.0psf; BCDL=6.0psf; h=35ft; Ke=1.00; Cat. II; Exp C; Enclosed; MWFRS (envelope) exterior zone and C-C Exterior(2E) zone; cantilever left and right exposed ; end vertical left and right exposed;C-C for members and forces & MWFRS for reactions shown; Lumber DOL=1.60 plate grip DOL=1.60
2) This truss has been designed for a 10.0 psf bottom chord live load nonconcurrent with any other live loads.
3) Refer to girder(s) for truss to truss connections.
4) Provide mechanical connection (by others) of truss to bearing plate capable of withstanding 23 lb uplift at joint 1 and 38 lb uplift at joint 4.
5) This truss is designed in accordance with the 2018 International Residential Code sections R502.11.1 and R802.10.2 and referenced standard ANSI/TPI 1.

LOAD CASE(S) Standard

STATE OF MISSOURI
JIE LU
NUMBER
PE-029327
PROFESSIONAL ENGINEER

June 26,2025

WARNING - Verify design parameters and READ NOTES ON THIS AND INCLUDED MITEK REFERENCE PAGE MII-7473 rev. 1/2/2023 BEFORE USE.
Design valid for use only with MiTek® connectors. This design is based only upon parameters shown, and is for an individual building component, not a truss system. Before use, the building designer must verify the applicability of design parameters and properly incorporate this design into the overall building design. Bracing indicated is to prevent buckling of individual truss web and/or chord members only. Additional temporary and permanent bracing is always required for stability and to prevent collapse with possible personal injury and property damage. For general guidance regarding the fabrication, storage, delivery, erection and bracing of trusses and truss systems, see **ANSI/TPI1 Quality Criteria, and DSB-22** available from Truss Plate Institute (www.tpinst.org) and **BCSI Building Component Safety Information** available from the Structural Building Component Association (www.sbcscomponents.com)

MiTek®
16023 Swingley Ridge Rd
Chesterfield, MO 63017
314.434.1200 / MiTek-US.com

RELEASE FOR CONSTRUCTION
AS NOTED ON PLANS REVIEW
DEVELOPMENT SERVICES
LEE'S SUMMIT, MISSOURI
08/15/2025 5:17:51

Job	Truss	Truss Type	Qty	Ply	Roof - HM Lot 196
P250555-01	M8	Monopitch Girder	1	1	I74462372 Job Reference (optional)

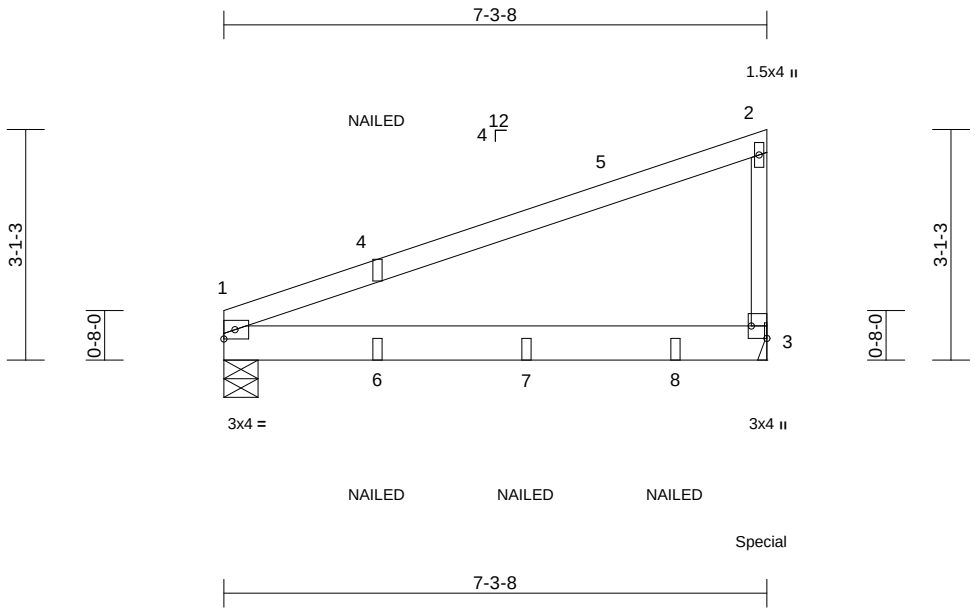

Scale = 1:30.9

Plate Offsets (X, Y): [3:Edge,0-2-8]

Loading	(psf)	Spacing	2-0-0	CSI		DEFL	in	(loc)	l/defl	L/d	PLATES	GRIP
TCLL (roof)	25.0	Plate Grip DOL	1.15	TC	0.62	Vert(LL)	0.06	1-3	>999	240	MT20	197/144
TCDL	10.0	Lumber DOL	1.15	BC	0.65	Vert(CT)	-0.12	1-3	>679	180		
BCLL	0.0	Rep Stress Incr	NO	WB	0.00	Horz(CT)	0.00	3	n/a	n/a		
BCDL	10.0	Code	IRC2018/TPI2014	Matrix-P							Weight: 27 lb	FT = 20%

LUMBER
TOP CHORD 2x4 SP 2400F 2.0E
BOT CHORD 2x6 SPF No.2
WEBS 2x3 SPF No.2

BRACING
TOP CHORD Structural wood sheathing directly applied or 6-0-0 oc purlins, except end verticals.
BOT CHORD Rigid ceiling directly applied or 10-0-0 oc bracing.

REACTIONS (size) 1=0-5-8, 3= Mechanical
Max Horiz 1=128 (LC 9)
Max Uplift 1=-110 (LC 8), 3=-213 (LC 12)
Max Grav 1=427 (LC 1), 3=614 (LC 1)

FORCES (lb) - Maximum Compression/Maximum Tension
TOP CHORD 1-2=-184/102, 2-3=-244/325
BOT CHORD 1-3=-55/60

NOTES
1) Wind: ASCE 7-16; Vult=115mph (3-second gust) Vasd=91mph; TCDL=6.0psf; BCDL=6.0psf; h=35ft; Ke=1.00; Cat. II; Exp C; Enclosed; MWFRS (envelope) exterior zone and C-C Exterior(2E) 0-2-12 to 5-2-12, Interior (1) 5-2-12 to 7-2-4 zone; cantilever left and right exposed ; end vertical left and right exposed;C-C for members and forces & MWFRS for reactions shown; Lumber DOL=1.60 plate grip DOL=1.60
2) This truss has been designed for a 10.0 psf bottom chord live load nonconcurrent with any other live loads.
3) Bearings are assumed to be: Joint 1 SPF No.2 crushing capacity of 425 psi.
4) Refer to girder(s) for truss to truss connections.
5) Provide mechanical connection (by others) of truss to bearing plate capable of withstanding 110 lb uplift at joint 1 and 213 lb uplift at joint 3.
6) This truss is designed in accordance with the 2018 International Residential Code sections R502.11.1 and R802.10.2 and referenced standard ANSI/TPI 1.
7) "NAILED" indicates Girder: 3-10d (0.148" x 3") toe-nails per NDS guidelines.
8) Hanger(s) or other connection device(s) shall be provided sufficient to support concentrated load(s) 128 lb down and 28 lb up at 7-2-4 on bottom chord. The design/selection of such connection device(s) is the responsibility of others.
9) In the LOAD CASE(S) section, loads applied to the face of the truss are noted as front (F) or back (B).

LOAD CASE(S) Standard
1) Dead + Roof Live (balanced): Lumber Increase=1.15, Plate Increase=1.15
Uniform Loads (lb/ft)
Vert: 1-2=-70, 1-3=-20
Concentrated Loads (lb)
Vert: 3=-128 (B), 6=-61 (B), 7=-113 (B), 8=-113 (B)

June 26,2025

WARNING - Verify design parameters and READ NOTES ON THIS AND INCLUDED MITEK REFERENCE PAGE MII-7473 rev. 1/2/2023 BEFORE USE.
Design valid for use only with MiTek® connectors. This design is based only upon parameters shown, and is for an individual building component, not a truss system. Before use, the building designer must verify the applicability of design parameters and properly incorporate this design into the overall building design. Bracing indicated is to prevent buckling of individual truss web and/or chord members only. Additional temporary and permanent bracing is always required for stability and to prevent collapse with possible personal injury and property damage. For general guidance regarding the fabrication, storage, delivery, erection and bracing of trusses and truss systems, see **ANSI/TPI1 Quality Criteria, and DSB-22** available from Truss Plate Institute (www.tpinst.org) and **BCSI Building Component Safety Information** available from the Structural Building Component Association (www.sbcscomponents.com)

MiTek®
16023 Swingley Ridge Rd
Chesterfield, MO 63017
314.434.1200 / MiTek-US.com

RELEASE FOR CONSTRUCTION
AS NOTED ON PLANS REVIEW
DEVELOPMENT SERVICES
LEE'S SUMMIT, MISSOURI
08/15/2025 5:17:51

Job	Truss	Truss Type	Qty	Ply	Roof - HM Lot 196
P250555-01	V1	Valley	1	1	I74462373 Job Reference (optional)

Premier Building Supply (Springhill, KS), Spring Hills, KS - 66083,

Run: 8.63 S Sep 26 2024 Print: 8.630 S Sep 26 2024 MiTek Industries, Inc. Wed Jun 25 09:29:36 Page: 1
ID:82QJHwSs83Y2lwv7j9oYtZzbfH9-RfC?PsB70Hq3NSgPqnL8w3uITXbGKWrCDoi7J4zJC?f

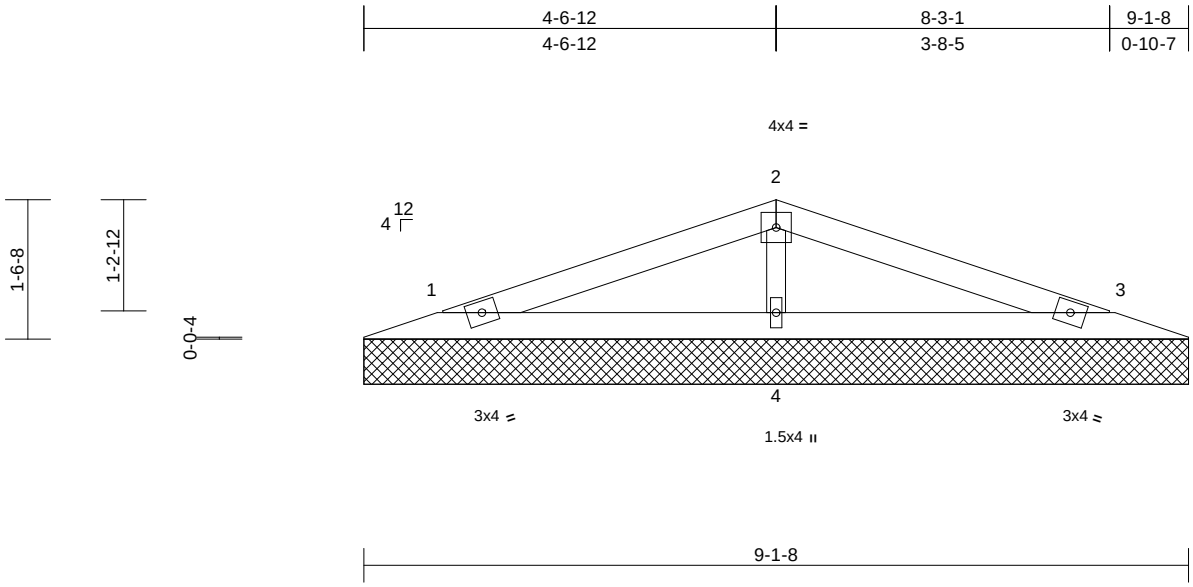

Scale = 1:25.5

Loading	(psf)	Spacing	2-0-0	CSI		DEFL	in	(loc)	l/defl	L/d	PLATES	GRIP
TCLL (roof)	25.0	Plate Grip DOL	1.15	TC	0.21	Vert(LL)	n/a	-	n/a	999	MT20	244/190
TCDL	10.0	Lumber DOL	1.15	BC	0.13	Vert(TL)	n/a	-	n/a	999		
BCLL	0.0	Rep Stress Incr	YES	WB	0.06	Horiz(TL)	0.00	3	n/a	n/a		
BCDL	10.0	Code	IRC2018/TPI2014	Matrix-S							Weight: 26 lb	FT = 20%

LUMBER
TOP CHORD 2x4 SP No.2
BOT CHORD 2x4 SP No.2
OTHERS 2x3 SPF No.2

BRACING
TOP CHORD Structural wood sheathing directly applied or 6-0-0 oc purlins.
BOT CHORD Rigid ceiling directly applied or 10-0-0 oc bracing.

REACTIONS (size) 1=9-1-8, 3=9-1-8, 4=9-1-8
Max Horiz 1=-23 (LC 17)
Max Uplift 1=-36 (LC 8), 3=-39 (LC 13), 4=-44 (LC 8)
Max Grav 1=149 (LC 25), 3=149 (LC 26), 4=375 (LC 1)

FORCES (lb) - Maximum Compression/Maximum Tension
TOP CHORD 1-2=-60/50, 2-3=-60/52
BOT CHORD 1-4=-1/23, 3-4=-1/23
WEBS 2-4=-264/261

NOTES
1) Unbalanced roof live loads have been considered for this design.
2) Wind: ASCE 7-16; Vult=115mph (3-second gust) Vasd=91mph; TCDL=6.0psf; BCDL=6.0psf; h=35ft; Ke=1.00; Cat. II; Exp C; Enclosed; MWFRS (envelope) exterior zone and C-C Exterior(2E) zone; cantilever left and right exposed ; end vertical left and right exposed;C-C for members and forces & MWFRS for reactions shown; Lumber DOL=1.60 plate grip DOL=1.60
3) Truss designed for wind loads in the plane of the truss only. For studs exposed to wind (normal to the face), see Standard Industry Gable End Details as applicable, or consult qualified building designer as per ANSI/TPI 1.
4) Gable requires continuous bottom chord bearing.
5) Gable studs spaced at 4-0-0 oc.
6) This truss has been designed for a 10.0 psf bottom chord live load nonconcurrent with any other live loads.
7) All bearings are assumed to be SP No.2 crushing capacity of 565 psi.
8) Provide mechanical connection (by others) of truss to bearing plate capable of withstanding 36 lb uplift at joint 1, 39 lb uplift at joint 3 and 44 lb uplift at joint 4.
9) This truss is designed in accordance with the 2018 International Residential Code sections R502.11.1 and R802.10.2 and referenced standard ANSI/TPI 1.

LOAD CASE(S) Standard

STATE OF MISSOURI
JIE LU
NUMBER
PE-029327
PROFESSIONAL ENGINEER

June 26,2025

WARNING - Verify design parameters and READ NOTES ON THIS AND INCLUDED MITEK REFERENCE PAGE MII-7473 rev. 1/2/2023 BEFORE USE.
Design valid for use only with MiTek® connectors. This design is based only upon parameters shown, and is for an individual building component, not a truss system. Before use, the building designer must verify the applicability of design parameters and properly incorporate this design into the overall building design. Bracing indicated is to prevent buckling of individual truss web and/or chord members only. Additional temporary and permanent bracing is always required for stability and to prevent collapse with possible personal injury and property damage. For general guidance regarding the fabrication, storage, delivery, erection and bracing of trusses and truss systems, see **ANSI/TPI1 Quality Criteria, and DSB-22** available from Truss Plate Institute (www.tpinst.org) and **BCSI Building Component Safety Information** available from the Structural Building Component Association (www.sbcscomponents.com)

MiTek®
16023 Swingley Ridge Rd
Chesterfield, MO 63017
314.434.1200 / MiTek-US.com

RELEASE FOR CONSTRUCTION
AS NOTED ON PLANS REVIEW
DEVELOPMENT SERVICES
LEE'S SUMMIT, MISSOURI
08/15/2025 5:17:51

Job	Truss	Truss Type	Qty	Ply	Roof - HM Lot 196
P250555-01	V2	Valley	1	1	I74462374 Job Reference (optional)

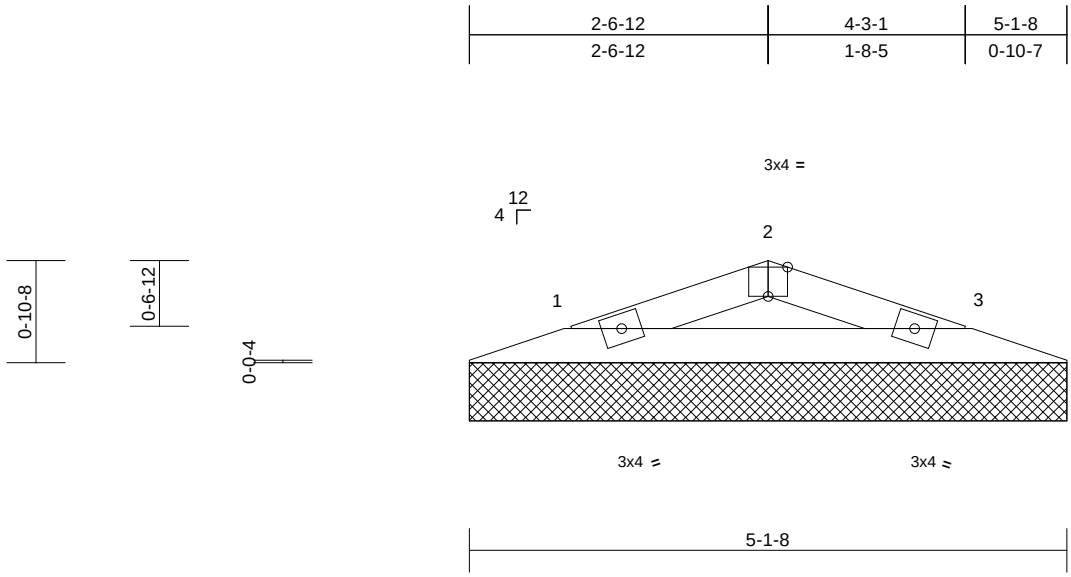

Scale = 1:19.8

Plate Offsets (X, Y): [2:0-2-0,Edge]

Loading	(psf)	Spacing	2-0-0	CSI		DEFL	in	(loc)	l/defl	L/d	PLATES	GRIP
TCLL (roof)	25.0	Plate Grip DOL	1.15	TC	0.10	Vert(LL)	n/a	-	n/a	999	MT20	244/190
TCDL	10.0	Lumber DOL	1.15	BC	0.14	Vert(TL)	n/a	-	n/a	999		
BCLL	0.0	Rep Stress Incr	YES	WB	0.00	Horiz(TL)	0.00	3	n/a	n/a		
BCDL	10.0	Code	IRC2018/TPI2014	Matrix-P							Weight: 13 lb	FT = 20%

LUMBER
TOP CHORD 2x4 SP No.2
BOT CHORD 2x4 SP No.2

BRACING
TOP CHORD Structural wood sheathing directly applied or 5-3-0 oc purlins.
BOT CHORD Rigid ceiling directly applied or 10-0-0 oc bracing.

REACTIONS (size) 1=5-1-8, 3=5-1-8
Max Horiz 1=11 (LC 16)
Max Uplift 1=-27 (LC 8), 3=-27 (LC 9)
Max Grav 1=152 (LC 1), 3=152 (LC 1)

FORCES (lb) - Maximum Compression/Maximum Tension
TOP CHORD 1-2=-198/239, 2-3=-198/243
BOT CHORD 1-3=-200/173

NOTES
1) Unbalanced roof live loads have been considered for this design.
2) Wind: ASCE 7-16; Vult=115mph (3-second gust) Vasd=91mph; TCDL=6.0psf; BCDL=6.0psf; h=35ft; Ke=1.00; Cat. II; Exp C; Enclosed; MWFRS (envelope) exterior zone and C-C Exterior(2E) zone; cantilever left and right exposed ; end vertical left and right exposed;C-C for members and forces & MWFRS for reactions shown; Lumber DOL=1.60 plate grip DOL=1.60
3) Truss designed for wind loads in the plane of the truss only. For studs exposed to wind (normal to the face), see Standard Industry Gable End Details as applicable, or consult qualified building designer as per ANSI/TPI 1.
4) Gable requires continuous bottom chord bearing.
5) Gable studs spaced at 4-0-0 oc.
6) This truss has been designed for a 10.0 psf bottom chord live load nonconcurrent with any other live loads.
7) All bearings are assumed to be SP No.2 crushing capacity of 565 psi.
8) Provide mechanical connection (by others) of truss to bearing plate capable of withstanding 27 lb uplift at joint 1 and 27 lb uplift at joint 3.
9) This truss is designed in accordance with the 2018 International Residential Code sections R502.11.1 and R802.10.2 and referenced standard ANSI/TPI 1.

LOAD CASE(S) Standard

June 26,2025

WARNING - Verify design parameters and READ NOTES ON THIS AND INCLUDED MITEK REFERENCE PAGE MII-7473 rev. 1/2/2023 BEFORE USE.
Design valid for use only with MiTek® connectors. This design is based only upon parameters shown, and is for an individual building component, not a truss system. Before use, the building designer must verify the applicability of design parameters and properly incorporate this design into the overall building design. Bracing indicated is to prevent buckling of individual truss web and/or chord members only. Additional temporary and permanent bracing is always required for stability and to prevent collapse with possible personal injury and property damage. For general guidance regarding the fabrication, storage, delivery, erection and bracing of trusses and truss systems, see **ANSI/TPI1 Quality Criteria, and DSB-22** available from Truss Plate Institute (www.tpinst.org) and **BCSI Building Component Safety Information** available from the Structural Building Component Association (www.sbcscomponents.com)

MiTek®
16023 Swingley Ridge Rd
Chesterfield, MO 63017
314.434.1200 / MiTek-US.com

RELEASE FOR CONSTRUCTION
AS NOTED ON PLANS REVIEW
DEVELOPMENT SERVICES
LEE'S SUMMIT, MISSOURI
08/15/2025 5:17:51

Symbols

PLATE LOCATION AND ORIENTATION

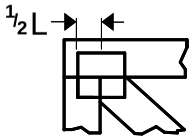

Center plate on joint unless x, y offsets are indicated. Dimensions are in ft-in-sixteenths. Apply plates to both sides of truss and fully embed teeth.

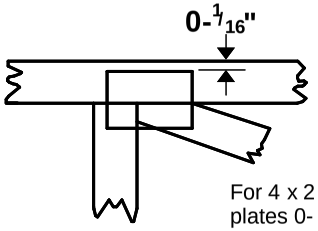

For 4 x 2 orientation, locate plates 0- 1/16" from outside edge of truss.

This symbol indicates the required direction of slots in connector plates.

* Plate location details available in MiTek software or upon request.

PLATE SIZE

4 x 4

The first dimension is the plate width measured perpendicular to slots. Second dimension is the length parallel to slots.

LATERAL BRACING LOCATION

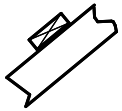

Indicated by symbol shown and/or by text in the bracing section of the output. Use T or I bracing if indicated.

BEARING

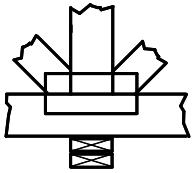

Indicates location where bearings (supports) occur. Icons vary but reaction section indicates joint number/letter where bearings occur. Min size shown is for crushing only.

Industry Standards:

ANSI/TPI1: National Design Specification for Metal Plate Connected Wood Truss Construction.
DSB-22: Design Standard for Bracing.
BCSI: Building Component Safety Information, Guide to Good Practice for Handling, Installing, Restraining & Bracing of Metal Plate Connected Wood Trusses.

Numbering System

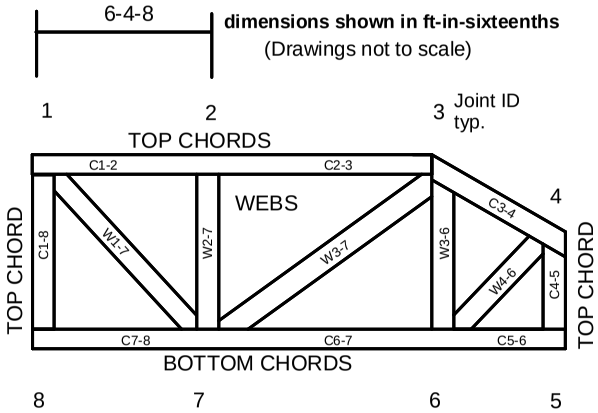

JOINTS ARE GENERALLY NUMBERED/LETTERED CLOCKWISE AROUND THE TRUSS STARTING AT THE JOINT FARTHEST TO THE LEFT.

CHORDS AND WEBS ARE IDENTIFIED BY END JOINT NUMBERS/LETTERS.

Product Code Approvals

ICC-ES Reports:

ESR-1988, ESR-2362, ESR-2685, ESR-3282
ESR-4722, ESL-1388

Design General Notes

Trusses are designed for wind loads in the plane of the truss unless otherwise shown.

Lumber design values are in accordance with ANSI/TPI 1 section 6.3 These truss designs rely on lumber values established by others.

© 2023 MiTek® All Rights Reserved

MiTek®

MiTek Engineering Reference Sheet: MII-7473 rev. 1/2/2023

General Safety Notes

Failure to Follow Could Cause Property Damage or Personal Injury

1. Additional stability bracing for truss system, e.g. diagonal or X-bracing, is always required. See BCSI.
2. Truss bracing must be designed by an engineer. For wide truss spacing, individual lateral braces themselves may require bracing, or alternative Tor I bracing should be considered.
3. Never exceed the design loading shown and never stack materials on inadequately braced trusses.
4. Provide copies of this truss design to the building designer, erection supervisor, property owner and all other interested parties.
5. Cut members to bear tightly against each other.
6. Place plates on each face of truss at each joint and embed fully. Knots and wane at joint locations are regulated by ANSI/TPI 1.
7. Design assumes trusses will be suitably protected from the environment in accord with ANSI/TPI 1.
8. Unless otherwise noted, moisture content of lumber shall not exceed 19% at time of fabrication.
9. Unless expressly noted, this design is not applicable for use with fire retardant, preservative treated, or green lumber.
10. Camber is a non-structural consideration and is the responsibility of truss fabricator. General practice is to camber for dead load deflection.
11. Plate type, size, orientation and location dimensions indicated are minimum plating requirements.
12. Lumber used shall be of the species and size, and in all respects, equal to or better than that specified.
13. Top chords must be sheathed or purlins provided at spacing indicated on design.
14. Bottom chords require lateral bracing at 10 ft. spacing, or less, if no ceiling is installed, unless otherwise noted.
15. Connections not shown are the responsibility of others.
16. Do not cut or alter truss member or plate without prior approval of an engineer.
17. Install and load vertically unless indicated otherwise.
18. Use of green or treated lumber may pose unacceptable environmental, health or performance risks. Consult with project engineer before use.
19. Review all portions of this design (front, back, words and pictures) before use. Reviewing pictures alone is not sufficient.
20. Design assumes manufacture in accordance with ANSI/TPI 1 Quality Criteria.
21. The design does not take into account any dynamic or other loads other than those expressly stated.

RELEASE FOR CONSTRUCTION
AS NOTED ON PLANS REVIEW
DEVELOPMENT SERVICES
LEE'S SUMMIT, MISSOURI
08/15/2025 5:17:51